AGRICULTURAL RESEARCH CORPORATION

WESTERN SUDAN AGRICULTURAL RESEARCH PROJECT

THE HORTICULTURAL RESOURCES OF THE KORDOFAN REGION OF SUDAN

WSARP PUBLICATION No. 6

OCTOBER, 1982

AGRICULTURAL RESEARCH CORPORATION
WESTERN SUDAN AGRICULTURAL RESEARCH PROJECT

The Government of Sudan
United States Agency for International Development
The World Bank
Consortium for International Development
Washington State University

THE HORTICULTURAL RESOURCES OF THE KORDOFAN REGION OF SUDAN

Mirghani Khogali Ahmed	Vegetable Crop Physiologist Gezira Research Station
Hassan M. Ali-Dinar	Fruit Crop Physiologist Hudeiba Research Station
Ahmed Ali Geneif	Vegetable Crop Breeder Sennar Research Station
Salah Ahmed Elhussein	Plant Biochemist Gezira Research Station
James J. Riley	Senior Advisor to ARC Director General

WSARP PUBLICATION No. 6 OCTOBER, 1982

Correct Citation:

WESTERN SUDAN AGRICULTURAL RESEARCH PROJECT 1982

The Horticultural Resources of the Kordofan Region of Sudan -- Report by the Agricultural Research Corporation Review Mission February 28 - March 7, 1981. WSARP Publication No. 6. Khartoum, Sudan and Pullman, Washington, USA.

Acknowledgement:

We wish to thank Dr. Hamid O. Burhan, ARC Director General; Dr. Osman Khalifa, WSARP Project Director; Dr. Robert F. Harwood, WSU Chief of Party and members of their respective organizations who made this mission possible and facilitated its implementation. Also, we wish to express our appreciation to the sponsors of the Western Sudan Agricultural Research Project; namely: The Government of Sudan, the World Bank and the U.S. Agency for International Development for providing the funding for this study.

ARC Review Mission

TABLE OF CONTENTS

	Page No.
Table of Contents	i
List of Figures	ii
List of Tables	iii
Report	
Background	1
Environment	2
Major Horticultural Production Systems	2
Horticultural Production Areas	4
Cultural Practices and Problems	
Market and Marketing Observations	6
Recommendations	8
Suggested Terms of Reference for the WSARP Horticulturist	10
Figures	13
Tables	17
Appendix	
a. R. F. Harwood letter to H. O. Burhan, 15 December, 1980	31
b. Report on Visit to Vegetable and Fruit Gardens in El Obeid Area (1973)	32

List of Figures

Figure No.		Page No.
1	Typical Household, Crops and Livestock Interdependence on the Non-cracking Clays, Western Sudan, ARC, Sudan, March, 1980	13
2	Typical Household, Crops, Livestock, Interdependence on the Cracking Clays, Western Sudan, ARC, Sudan, March, 1980	14
3	Idealized Farming Organization in Southern Kordofan, Central Districts	15
4	Route of Horticultural Survey Team, February 28 - March 7, 1981, Kordofan, Sudan	16

List of Tables

Table No.		Page No.
1	Mean Weather Data for Kadugli, Sudan	17
2	Mean Weather Data for El Obeid, Sudan	18
3	Location and Planted Area of Selected Horticultural Production Sites --- Current and Potential, Kordofan, Sudan, March, 1981	19
4	Horticultural Production Areas in Southern Kordofan, Sudan	20
5	Horticultural Crops Found in the Kordofan Region, Sudan	21
6	Varieties or Cultivars of Fruits and Vegetables Observed During Field Trip, February 28 - March 5, 1981, Kordofan, Sudan	24
7	Kerkadeh Planted Area in Northern Kordofan, 1974 - 1980, Sudan	25
8	Market Volume, Value, and Price of Kerkadeh in El Obeid Agricultural Products Market, 1969 - 1980, Kordofan, Sudan	26
9	Relative Importance of Fruit Crops in Production Areas Visited by Survey Team, February 28 - March 5, 1981, Kordofan, Sudan	27
10	Relative Importance of Vegetable Crops in Production Areas Visited by Survey Team, February 28 - March 5, 1981, Kordofan, Sudan	28
11	Indicative Requirements for WSARP Horticultural Program	29

Background

The Agricultural Research Corporation, ARC, is a semi-autonomous, national organization in the Ministry of Agriculture, Food and Natural Resources responsible for planning and implementing agricultural research in Sudan. It was created by the Agricultural Research Act of 1967 to consolidate national crop research efforts. The commodities of cotton, sorghum, wheat, groundnuts, sesame, food legumes and vegetables receive primary research attention.

In 1975 the scope of ARC activities was broadened to include the disciplines of: food technology, fisheries, marine biology, forestry, range management and wildlife conservation. Currently, research is conducted at seventeen stations, principally near the major irrigated agricultural schemes along the Nile and its tributaries. The ARC program will be widened even further with the completion of the Western Sudan Agricultural Research Project, WSARP, in 1985.

The WSARP is establishing integrated crop/livestock research programs for rainfed agricultural production at four locations in Western Sudan, namely: Kadugli, Southern Kordofan; El Obeid, Northern Kordofan; Ghazala Gawazet, Southern Darfur; and El Fasher, Northern Darfur. They will become part of the ARC network of research stations upon completion of the WSARP assignment.

The WSARP recognizes the importance of fruit and vegetable crops in the Kordofan Region and accordingly, the research program for the Kordofan includes a horticultural component. The Deputy Director of the WSARP in a letter to the Director General of the ARC on December 15, 1980, (copy included in Appendix) requested the assistance of the ARC in assessing the horticultural resources of the Kordofan for the purpose of setting priorities for the horticultural program being developed by the WSARP. The ARC Director General responded by naming the following members to the review team:

Mirghani Khogali Ahmed, Veg. Crop Physiol., Gezira
Hassan M. Ali-Dinar, Fruit Crop Phisiologist, Hudeiba
Ahmed Ali Geneif, Vegetable Crop Breeder, Sennar
Salah Ahmed Elhussein, Plant Bio-chem., Gezira
James J. Riley, ARC Senior Advisor, Khartoum

The team visited horticultural research and production areas in the Kordofan from February 28 - March 7, 1981. The support given by the ARC staff at Kadugli and El Obeid was excellent and essential to the success of the mission. The team found the report of an earlier ARC sponsored tour of the Bara and Banjadeed horticultural production areas near El Obeid in 1973 to be a valuable reference. A copy of the report is included in the Appendix of this report.

The recommendations, contained in this report, are made for the purpose of improving horticultural research, extension and production in the Kordofan Region. Thus, some recommendations outside the scope of the WSARP or the perview of the ARC have been included as they have bearing on the adoption of application of research results by the farmers and growers in the Region.

Environment

The Kordofan is a vast arid and semi-arid region in central Sudan extending from 9° 30' to 16° 30' North Latitude and from 27° 30' to 32° East Longitude. The annual rainfall ranges from 200 mm in the north to 800 mm in the south. Rain falls on approximately 40 days per year, mostly in the months of May - October. The precipitation exceeds the potential evapotranspiration for two months in the south and one month in the north.

The area north of 14° 30' (approximately corresponding to the 300 mm isohyet) is of little impor ance with regard to crop production and was not visited by the team. The mean maximum and minimum temperatures of the region are about $34^{o}C$ and $19^{o}C$, respectively, with an average annual deviation of approximately $\pm$ $5^{o}C$.

Kadugli lies within sub-zone B of the Sudanian ecological zone, and El Obeid is in the Sahelian zone. More details on the mean weather data for Kadugli and El Obeid are given in Tables 1 and 2.

Major Horticultural Production Systems

Schematic representations of the general inter-relationships between crops; livestock and households in the Kordofan are given in Figures 1 and 2. Note that in more arid areas (Fig. 1) nomadism is more pronounced, while in areas with slightly higher rainfall (Fig. 2), sedentary farming increases as indicated by the cultivation of more crops and less emphasis on gathering products from wild or semi-wild vegetation.

Hunting Technical Services, HTS, has closely examined the farming systems of south central Kordofan in the vicinity of Kadugli. An idealized diagram of farm organization in the region, based on HTS studies, is given in Fig. 3. Note that horticultural crops are planted exclusively in house gardens called jabraka (singular) or jabareek (plural), and town gardens. Due to the excellent work of HTS in this area, the study team gave more attention to other horticultural systems; primarily, in the Eastern and Central portions of the Kordofan Region. The route of the survey team is shown in Fig. 4.

Fruit and vegetable cultivation occurs most frequently in the broad flood plains (butha) of the ephemeral streams (khors). In some areas, such as Abu Habil, vegetables are direct seeded or transplanted along the newly-exposed banks of the falling streams and survive solely on the residual soil moisture. These areas produce vegetables over a relatively long period as a result of the staggered planting dates (i.e. the upper banks, which become exposed first, are planted earlier than the bottom of the stream bed, which is exposed only when surface water flow ceases).

Fruit trees are planted almost exclusively in the flood plains of the larger khors. Mango prospers in areas where the water table remains fairly close to the surface (less than 10 m depth) the year round. After establishment, in about 3 years, it thrives without irrigation. The best example of

mango grown in this manner is the extensive orchards along Khor El-Butha between Rashad and Abu Gubeiha. Citrus trees do not grow well under similar conditions and flourished only when irrigated with good quality water in soils with slightly higher clay content.

The products of wild or natural plants are gathered from areas away from the stream channels, primarily in North Kordofan. Plant products typically harvested include: Kordofan senna (leaves and pods used in natural laxatives), okra (chopped and dried for preservation and marketing), mulaita (leafy green vegetables), soreeb (leaves are fermented to prepare an appetizer called kawal), lalobe[1] (fruit of Heglig), tebeldi tree[2] (leaves can be eaten fresh or mixed with peanut butter), gongoles[3] (fruit of tebeldi tree with acidic flavor, eaten as is or added to local medicines, the sprouted Delaib[4] palm fruit (cooked and eaten as starchy vegetable), naal[5] and Marhabeeb (for use in soaps and perfumes), wild okra and wild basil (spice). Families tend to gather these in sufficient quantities to meet their own needs. Thus, few of the products, except the senna and okra, enter the normal marketing channels. Nevertheless, they are important sources of food and nutrients for a large segment of the population. The diverse wild okra population is a valuable genetic resource, which should be preserved.

Kerkadeh (roselle) is grown intercropped with groundnuts, sesame or millet on lighter rainfed soils with little or no access to ground water. The flowers are gathered by family members. The floral calyces are separated from the other parts of the flowers and either used within a household or sold in the market for preparation of jams or beverages. Removal of the calyces is tedious, labor-intensive work and has led to a shift to alternative less demanding crops (i.e. groundnuts or millet) by many farmers. Most kerkadeh is dried and rehydrated for use in individual homes. An attempt to commercially process it into a powdered product at a powdered milk factory in Babanusa about a decade ago failed, due to technical problems.

---

(1) Lalobe: The fruit of the "heglig" trees is edible, together with other parts of the plant, it has purgative properties. Lalobe is at present of interest to the pharmaceutical industry as an alternative source of diosgenin, the steroidal sapogenin which is used as a precursor for the partial synthesis of many important steriod drugs, including oral contraceptives and sex hormones.

(2) The profuse growth of Tebeldi (Baobab) trees in the Kordofan Region has led them to be closely identified with the area and vice versa. The hollow trunks are noted natural water storage reservoirs.

(3) Gongoles: The fruit of the Tebeldi tree. The fruit pulp which is acidic makes a pleasant drink with water. The pulp is also eaten as it is, or added to local medicines.

(4) Delaib: The fleshy young root (about 15 cm long) emerging from the germinating seed is boiled and eaten as a starchy vegetable.

(5) Nal, Mahrabeeb and wild basil: Contain essential oil potentially useful for flavoring purposes and for use in perfumes and soaps.

Horticultural Production Areas

In southwest Kordofan, among the Nuba Mountains, the horticultural crops (chiefly maize, tomato, beans, pumpkin, pepper and okra) are grown in town gardens and jabareek.

In the southeast the leading horticultural production areas are in the khors near Umm Berembeita, Abu Gubeiha, Abu Kharshola and Khor El Delaib. It is estimated that there are several thousand khor-based gardens in the Kordofan ranging in size from 1 - 20 fd (feddans),(1) with an average size of 5 fd. An individual grower can irrigate 5 fd. easily during the dry season (December - April) from the flow of a pump with a two-inch pipe lifting well water 5 - 10 meters, which probably accounts for the high number of farms of this size. The entire production area of a given khor ranges from 2,000 fd. in Khor El Delaib to 20,000 fd in Khor El-Butra (between Rashad and Abu Gubeiha). The edge of the khors form a sharp boundary between lush verdant vegetation and dry brown savannah or desert plants which is most distinct in the dry season.

The distribution of crops within the khors varies from place to place. In Abu Gubeiha, Umm Berembeita, Banjadeed and Khor El Delaib 85% of the fruit trees are mango, with about 10% citrus (mostly lime) and 5% guava. Vegetable crops are usually grown in separate plots from the tree crops, except in Abu Gubeiha, where pumpkin is planted between the trees. Citrus is more important in Abu Kharshola and Bara. Mango, in the latter area, has proved to be a failure, perhaps due to the high calcium carbonate content in the soil.

Vegetables, except for pumpkin, are relatively unimportant in Abu Gubeiha, where they account for less than 25 fd of the planted area. Vegetable crops cover 30% of Banjadeed area, 70% of the Bara production plots and 100% of the plantings in Abu Habil.

In the Er-Rahad region, vegetables and fruits are grown around a shallow lake called turda. The turda is fed by seasonal surface water runoff in the khors. The water in the turda is pumped or carried to irrigate surrounding horticultural plots during the dry season.

A summary of current and potential planted areas for horticultural crops is given in Table 3. The numerous, and generally small, horticultural production areas in Southern Kordofan are listed in Table 4. The horticultural crops and major cultivars found in the Kordofan are given in Tables 5 and 6, respectively.

Kerkadeh is grown mostly in the eastern portion of Northern Kordofan near Umm Rewaba and Er-Rahad and in the vicinity of El Obeid (e.g. Kasgail, Alloba, Umm Usher and Abu Harraz). Although Southern Kordofan contributes little to the total kerdadeh production in the Region, some can be found in Kalogi, Umm Berembeita, Abu Gubeiha, and Al Abasiya Tagaly. There has been an increase in the area planted to kerkadeh in Northern Kordofan (Table 7), however, the total production trend for the Region is downward.

(1) 1 feddan = 1.04 acre = 0.42 hectares

Cultural Practices and Problems

In Abu Gubeiha the Balady (Kitchener) mango cultivar is preferred over others because of its high yield, earliness and transportability. Also, it bears fruit twice per year (February and September). Other cultivars produce a single crop. The September fruiting of the Baladi, termed felita is not as important as the February production. The September fruits are less numerous, smaller and generally of lower quality. Yields are not systematically recorded; however, some growers report harvesting 3,500 fruits per tree, annually.

The Baladi mango is propagated by seed as are the other tree crops grown in Kordofan. Trees are spaced 5 - 7m apart in the older orchards. As this was found to be too close, a spacing of 14m x 14m is used in the newer orchards. Growers mentioned having difficulty in obtaining seedlings of tree crops (i.e. mango, citrus, guava, etc.). Most tree seedlings are brought into Kordofan by the growers from Sennar or Gezira. Scale insects were observed on mango in several locations, but damage was not severe.

The Baladi Lime is generally planted on a 7m x 7m grid. The trees do not have as deep a root system as mango and, therefore, usually require supplemental irrigation in order to yield well. We observed that citrus trees which were not irrigated had curled, yellow leaves and stunted growth. Even where irrigation was attempted, it was seldom done well and signs of water stress were in evidence on many trees. The main citrus production season is in the early dry season (October - December) immediately following the cessation of the rains. With better water management, the harvesting period could be extended, theoretically, to continuous, year-round production. The citrus orchards are not well maintained and the trees are not given proper care. Weeds grow profusely. Insect pests and diseases are unchecked. The trees are not pruned. Most of the citrus displayed major and/or minor element deficiency symptoms. Zinc deficiency was particularly notable in the Bara area. The light soils coupled with the abundant weeds have aided in making termites a serious problem for all khor planted tree crops.

Two types of local guava cultivars, with red or white flesh, are grown in the Kordofan. Guava tree seedlings are planted on a 7m x 7m grid in the beginning of the rainy season and given supplemental irrigation their first dry season. No further irrigation is given in successive years. Fruits are harvested from October - December.

The Delaib palm, a frequently used indicator of available water in the Kordofan, is well on its way to extinction. Few young trees were in evidence and scores of older trees are being felled to make room for mango, citrus or guava orchards. The Delaib palm produces a popular fruit which is sold in markets throughout Sudan. Its survival is further threatened by the practice, within the Kordofan Region, of boiling the germinated seedlings, called haluk for consumption as a dietary starch supplement.

Vegetable production during the hottest months ceases or is sharply curtailed. As a result, most fresh vegetables are scarce in the Kordofan markets from April to June.

Tomato, which is particularly heat sensitive, is unavailable from April to October. Dried forms of wild okra, red bulb onion, hot pepper, and tomato persist in the market year-round, becoming more important in diets during

the hot season. Of these, only the bulb onion is not grown widely in the Kordofan. It is produced in the Kassala region and transported throughout the Sudan.

Sweet potato is not planted extensively, but, both orange and white flesh cultivars are observed in Kordofan markets. A bright orange-fleshed cultivar was collected from the Abu Gubeiha market and transmitted to the ARC Rahad Research Station for propagation and evaluation.

Pumpkin is planted in May and harvested from September through February. It is given no fertilizer or irrigation, making production costs low. Since it commands a good market price, it is popular with growers. Production reaches a peak in December. We were told that during the peak season, as many as 25 trucks per day, with 300 - 500 pumpkins each, leave the Abu Gubeiha area bound for markets throughout Sudan. Pumpkin stores well and can be found in markets the year round. It suffers little damage during transport, which enables it to be shipped long distances with little wastage. Most pumpkins consummed in Sudan are produced in Kordofan.

Most of the tomato plants seen during the survey exhibited symptoms of leaf curl virus. It was most serious in Abu Gubeiha. This disease is vectored by whiteflies and has debilitated the tomato industry in the Middle East and Northeastern Africa. A breeding program aimed at producing tomato cultivars resistant to the virus, initiated at the ARC Sennar Research Station, shows promise, but needs to be strengthened, if it is to overcome this problem. The tomato planted in Khor Abu Habil and Bara were not seriously affected by leaf curl. This is undoubtedly due to the fact that these areas are relatively isolated from plantings of crops which host white-flies. Also in Abu Habil, the tomato are seeded in the wet season when whitefly populations are at a minimum. In Bara, tomato plants were severely infested with orobanche, a parasitic weed. It can normally be controlled by removing shoots when it first appears. All the vegetables grown in Bara are planted in flat beds surrounded by bunds to enable them to be flood irrigated. Plots are flooded at intervals of 3-5 days. The periodic wetting causes many of the tomato fruit to rot.

Although infestation by Heliothis and other insect pests was noted, particularly on tomato and eggplant, the damage caused did not appear to be a major factor in limiting production. However, powdery mildew symptoms observed on okra and eggplant seemed severe enough to limit yields.

The shortage of farm labor is not yet as severe in Kordofan as in other parts of Sudan. However, if the problem becomes more acute in the Kordofan Region, vegetable crop production may suffer.

Market and Marketing Observations

During a visit to the vegetable market in Kadugli on February 28, the following prices and observations were made:

CROP	UNIT	PRICE Pt.	SOURCE
Tomato	Kilo	55	Umm Serdiba
Sweet potato	"	50	local
White potato	"	80	El Fasher/Khartoum
Grapefruit	ea.	35	local/Dongola/Gezira
Lime	ea.	2	local
Mango	doz.	300	Abu Gubeiha

* Piaster, 1 Pt. = 1/100 Sudanese Pound

It should be noted that the mango price was relatively high, since it was the beginning of the harvest season, which usually extends from March - June.

In Abu Gubeiha, mango marketing agents from Khartoum purchase whole orchards, once fruit has set and yield can be estimated. When the fruits ripen, the agents bring their own trucks and pickers to harvest the produce and take it to market. In one case cited by a grower, the produce from a 5 fd. orchard sold for £s 2,500 (Sudanese pounds) in 1980. The agent resold it in Khartoum for £s 6,000. The local growers are dissatisfied with the system, but, at present, are unable to provide an alternate means of marketing.

Limes are generally picked by the growers and sold at the farm gate to marketing agents for £s 2-3 per sack. The peak harvest period is from October to December.

Guava is harvested about the same time as lime and is marketed in a similar manner.

A significant portion of the kerkadeh produced in Sudan is grown in the Kordofan region. Much of that is marketed in El Obeid. The price in the El Obeid market escalated dramatically from 1976 - 1978, reflecting an increase in the quantity exported to West Germany and elsewhere. In the last few years, the price has stabilized (Table 8).

The produce harvested in Abu Habil is marketed in El Obeid. The farmer receives from £s 3.00 to £s 6.00 for a box of tomato which retails in El Obeid for £s 12.00. Production costs in Abu Habil are quite low (i.e., no irrigation, fertilizer or chemicals are applied) thus making the profit margin attractive to farmers.

Vegetables grown in the Er-Rahad area are taken northward to markets in El Obeid and southward as far as Abu Gubeiha. The excellent marketing opportunities for vegetables have kept fruit crops from becoming more important in Er-Rahad (i.e., vegetables, if you can get them to market, have a greater income potential than fruits; however, fruits are generally more transportable than vegetables).

The relative importance of fruit and vegetable crops in the areas visited by the survey team are given in Tables 9 and 10, respectively. Crops which were seen growing well on a small scale and may be of potential economic importance in the future in khors, such as Abu Gubeiha are: grapes, custard apples, papaya, banana and dates.

The potential for horticultural crop production in Kordofan will not be realized until means of transporting the produce out of the region to the major urban markets is improved. Local markets, within Kordofan, cannot absorb the region's full production capacity which lies primarily in the khor based systems. Growers will not reap the full benefits of their efforts until they have their own transport systems and employ improved methods of packaging to reduce shipment losses. The completion of the improved roadway from Kosti to Umm Ruwaba and El Obeid should impact favorably on the horticultural industry in the Kordofan region.

Recommendations

Rationale

The Kordofan Region is already making a significant contribution of fruits and vegetables to the major markets of Sudan. A considerable number of plantings have been made by growers on their own initiative on the basis of little or no technical information. The Kordofan has a comparative advantage over other regions in Sudan for producing a number of species of fruits and vegetables. Horticultural crops are being grown efficiently with a minimum of inputs and costs. The low cost of land, coupled with the low level of required inputs, has enabled many minimum wage earners to invest in their own gardens or orchards. This has produced a wide base of participation among the populace in this type of agricultural production. Gardens of one feddan or smaller are common and economically productive.

There is a growing appreciation of horticultural crops by consumers who are becoming better able to acquire these products. Thus, the demand for fruits and vegetables in Sudan can be expected to rise. With the improvement of roads, it will become increasingly easier for Kordofan produce to find its way to major urban markets in Sudan and into export channels. Even now, an appreciable quantity of mango from Kordofan is being exported to neighboring countries.

Recommendations

1. More attention and resources should be devoted to horticultural research, extension and production throughout the Kordofan Region.

2. Efforts should be made to encourage chemical, seed and agricultural supply firms to expand the number of their commercial outlets in the region. At present, there are insufficient sources from which to purchase these required inputs.

3. Means should be sought for assisting growers to transport and market their products in and outside the region.

4. The Extension Service should be prepared to establish demonstration trials and to conduct field days for farmers in order to inform them of the best cultivars and cultural practices for their areas and to ensure that research results are put into practice rapidly.

5. The Horticultural Administration in the Kordofan Region should be given the resources to establish nurseries throughout the region. Specifically, it is suggested that nurseries be started at El Obeid, Abu Gubeiha, Kadugli, and Al-Nahud (Nurseries are common in many provinces. At present, Kordofan growers are bringing plant materials from such nurseries in Wad Medani and Sennar.). Land and supervisory staff are already on hand in Kordofan for this purpose.

6. The packaging and handling of produce being transported to market should be improved by applying established principles to the specific problems found in the Kordofan. Emphasis should be given to using local materials to keep costs low.

7. Expansion of planted areas for horticultural production (see Table 3) should take into account the availability of water resources. The Rural Water Supply Corporation has conducted geologic and hydrologic investigations. Proper analyses of these reports by horticulturists, as well as geologists, may prove to be advantageous in identifying promising production areas and for establishing limits for growth in water-short areas.

8. The Rural Water Supply Corporation should be encouraged to cooperate with the Horticultural Administration in giving advice and demonstrations to farmers and growers on the proper means of digging wells, installing pumps, and conserving water; including introduction of new irrigation techniques and safe means of disposing of sewage effluent to prevent contamination of agricultural and/or domestic water supplies.

9. The level of expertise within the Horticultural Administration in the Kordofan should be raised through training and/or transfer of skilled staff from other regions. The number of positions needs to be increased, as well. At least one and preferably two Horticultural Specialists (M.S. or Ph.D.) should be assigned to the Kordofan region with a supporting staff of four well-trained Assistant Specialists (B.S.) and 6-8 Technical Assistants (diploma holders).

10. Care should be taken to preserve the diversity of the wild okra population which is widely distributed and harvested throughout the Kordofan Region. It is a valuable genetic resource for cultivated okra crop improvement programs.

11. More studies and surveys are needed to make better use of the wild flora in the Kordofan as sources of natural products.

12. Wide-scale plantings of crops which may harbor and/or propagate insect pests or diseases potentially harmful to horticultural crops in the vicinity of major fruit or vegetable production areas should be avoided.

Suggested Terms of Reference for the WSARP Horticulturist

1. The Horticulturist should be based at the ARC Research Station in El Obeid due to its proximity and year round accessibility to the major horticultural production areas in Kordofan (see Table 3). By locating in El Obeid the horticulturist will have an opportunity to liase with Regional Government offices of the Horticultural Administration and other agriculturally related regional organizations.

2. Land, representative of that in the major horticultural production areas in Kordofan (i.e. khor-based production), should be identified and secured near El Obeid for experimental and demonstration trials of the horticultural research program.

   An area of 50 - 100 fd., near El Obeid, would be ideal. It is suggested that a search for a suitable site begin immediately, giving priority consideration to locations in Banjadeed, Khor Al-Abaid and Abu Harraz.

3. Fruit crops widely planted in Kordofan and deserving of high priority research attention, in order of importance, are: mango, citrus (lime, grapefruit and orange) and guava.

4. Fruit crops which might be introduced or more widely evaluated, in order of importance, are: papaya, custard apple, sapodilla, date palm (*Phoenix sp.*) and avocado (*Persea americana*).

5. Vegetable crops widely planted in Kordofan, in commercial and home gardens, deserving of priority research attention, in order of importance, are tomato, okra, pumpkin, hot pepper, eggplant, watermelon (for seed, fruit and water), onions (green and bulb), cowpea (seeds and leaves), radish and leafy green vegetables.

6. Research priorities

   a. General

      (1) Variety trials at several locations (i.e. most important production areas).

      (2) Water management studies (irrigation efficiency, water conservation, etc.).

      (3) Crop husbandry practices (intercropping, rotation, plant care, etc.)

(4) Means of providing adequate nutrients to plants at minimal cost with organic and/or inorganic fertilizers, crop rotation, etc.

(5) Appropriate means of controlling insect pests, diseases and weeds with cropping practices, synthetic compounds or indigenous natural products. Especial emphasis to be given to control of nematodes and termites.

(6) Post-harvest studies for preservation and/or transporting of produce to market.

(7) Production and marketing economic analyses and consumer preference surveys.

b. Crop specific

(1) Fruits

(a) Mango

i. Lengthening of harvest season by introduction of cultivars with a wide range of maturities

ii. Determination of optimal tree planting density

(b) Citrus

i. Selection of suitable root stocks for region

ii. Propagation of virus free bud wood

(c) Spodilla - improved means of propagation

(2) Vegetables - tomato - increasing off-season production

7. Collaboration with on-going ARC programs should be initiated; especially, but, not necessarily limited to, the following:

a. Tomato improvement program, breeding for resistance to leaf curl virus, drought tolerance and orobanche resistance

b. Citrus program for identifying virus-free bud wood

c. Wild flora screening for useful chemical compounds

d. Okra improvement program

e. Hot pepper improvement program

f. Onion improvement program

8. The horticulturist filling the senior position should have a wide familiarity with horticultural crops and a strong field orientation. It is recommended that eventually two horticulturists be assigned to the Region, one with a major in fruit crops, and the other with a major in vegetable crops.

9. An indication of the general requirements for the horticultural program is given in Table 11.

Figure 1: Typical Household, Crops, and Livestock Interdependence On The Non-Cracking Clays

Western Sudan

ARC, Sudan, March 1980 a/

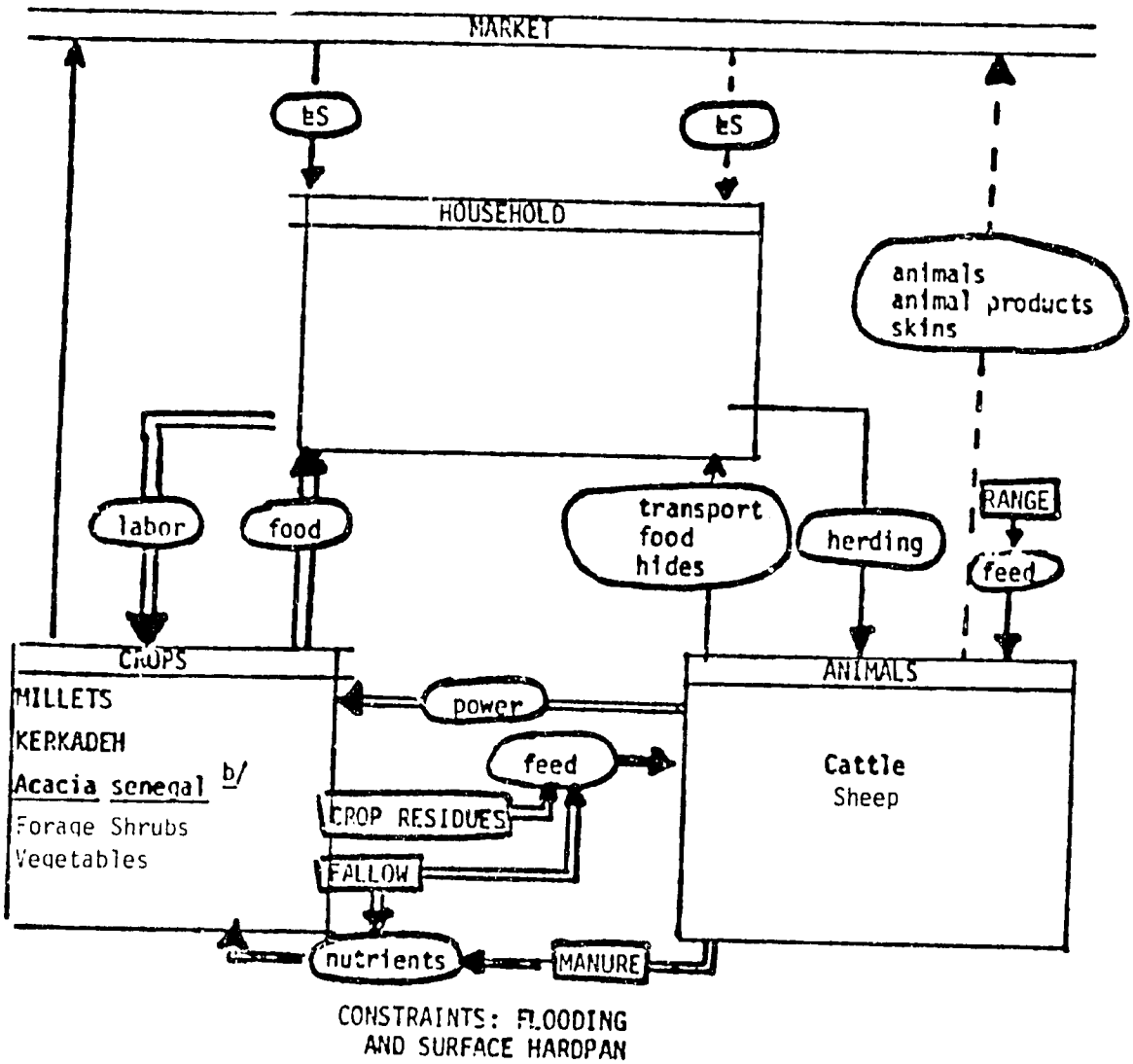

Annual Precipitation 400mm ± 30% (280-520mm)

Research Location El Obeid

---- Occasional Relationships

____ Existing Relationships ▬▬ To be emphasized in Project

a/ Based on World Bank's Sudan Agricultural Research Project Staff Appraisal Report, June 6, 1978 (Report No. 2005-SU)

b/ For Gum Arabic, Windbreaks Fuel and Shelter

Figure 2: Typical Household, Crops, and Livestock Interdependence On The Cracking Clays

Western Sudan

ARC, Sudan, March 1980 a/

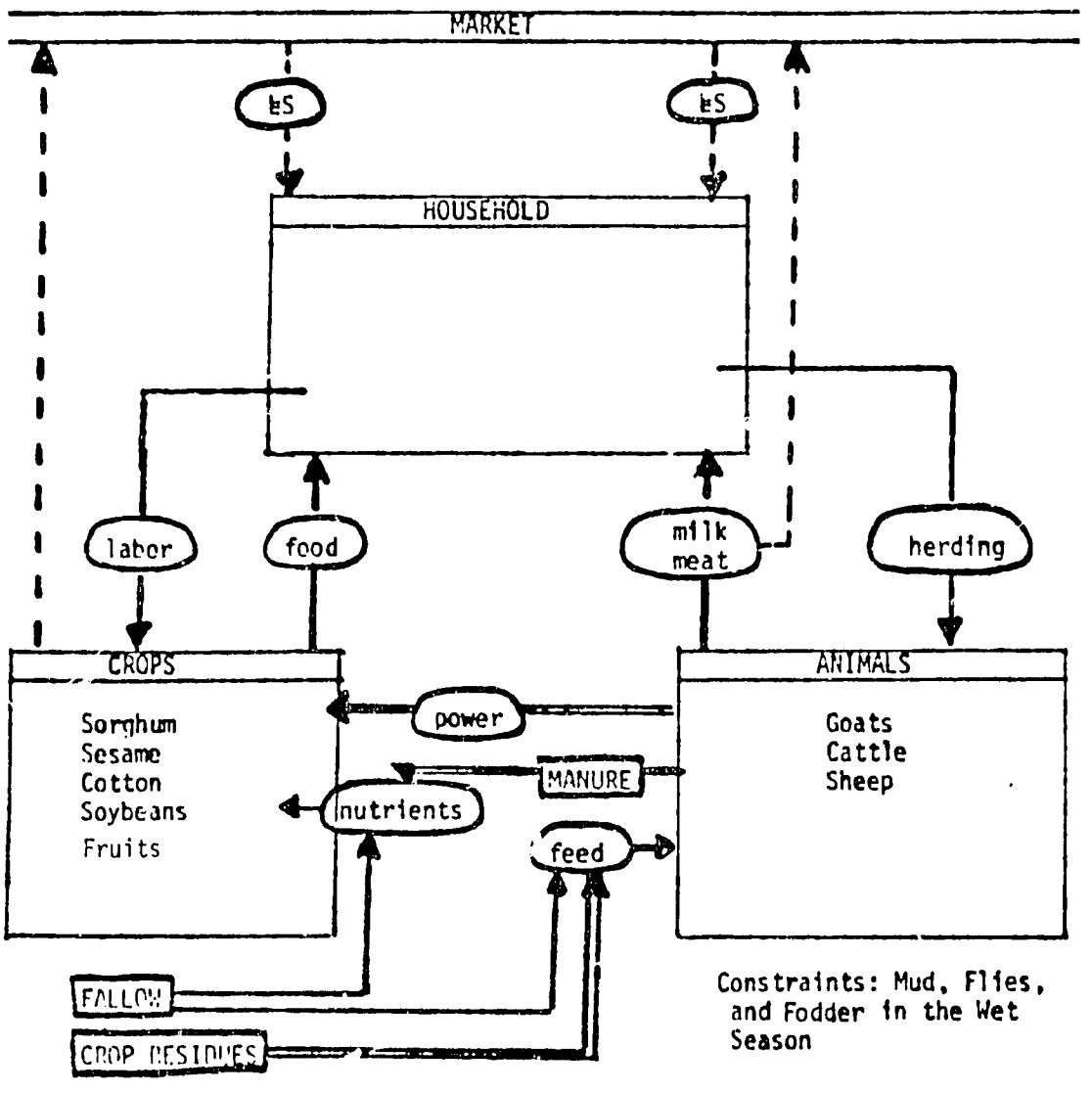

Annual Precipitation 760mm ± 20% (618-912)

Research Location Kadugli ----- Occasional Relationships

____ Existing Relationships ▬▬ To be emphasized in Project

a/ Based on World Bank's Sudan Agricultural Research Project Staff Appraisal Report, June 6, 1978 (Report No. 2005-SU) Judged to have greatest development potential for integrated crop/livestock system in Western Sudan. The system has similar characteristics of production system on stabilized sands.

Figure 3: Idealized Farming Organization in South Kordofan Central Districts

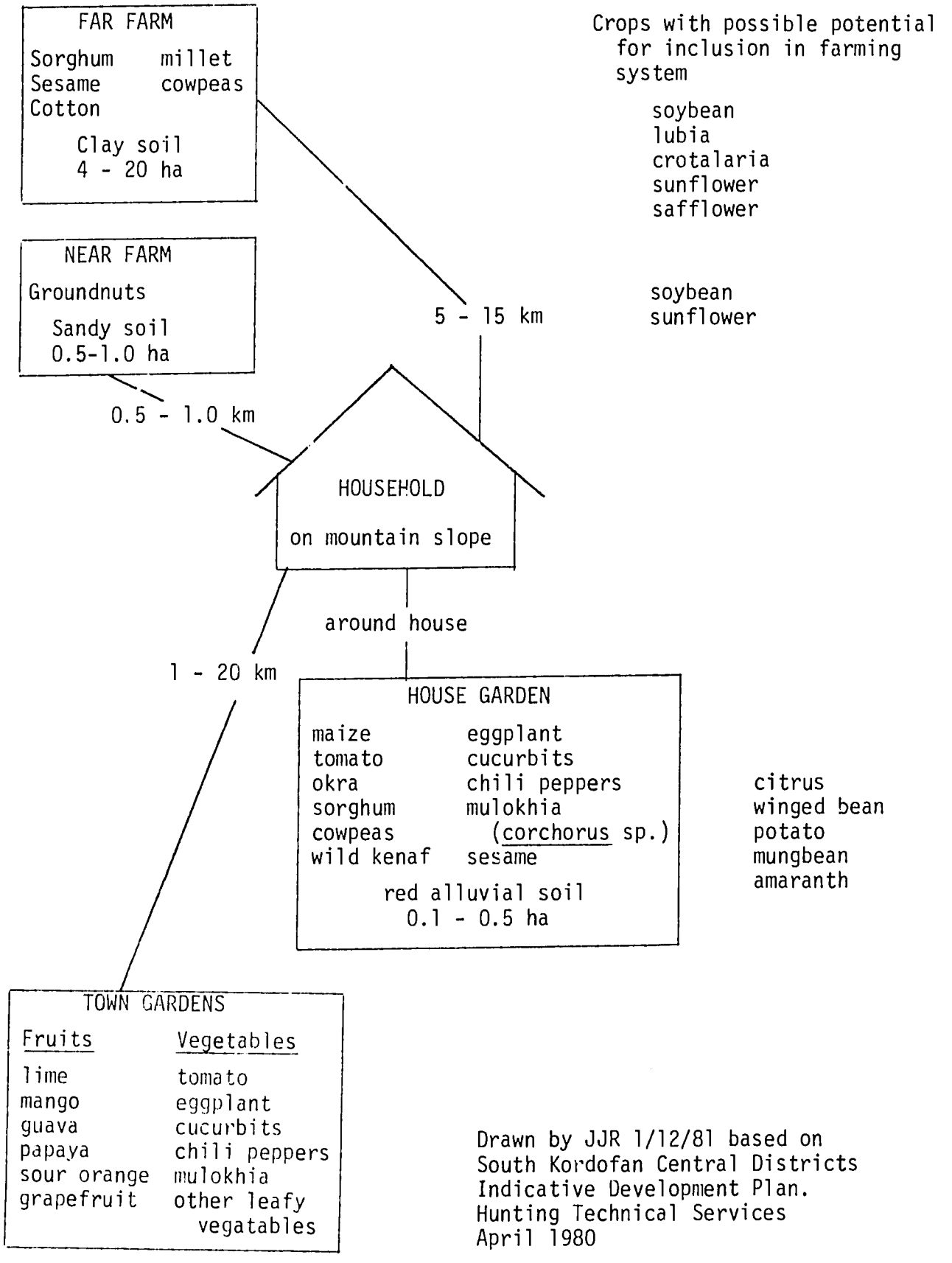

Drawn by JJR 1/12/81 based on South Kordofan Central Districts Indicative Development Plan. Hunting Technical Services April 1980

Figure 4: Route of Horitcultural Survey Team, February 23 - March 7, 1981
Kordofan, Sudan

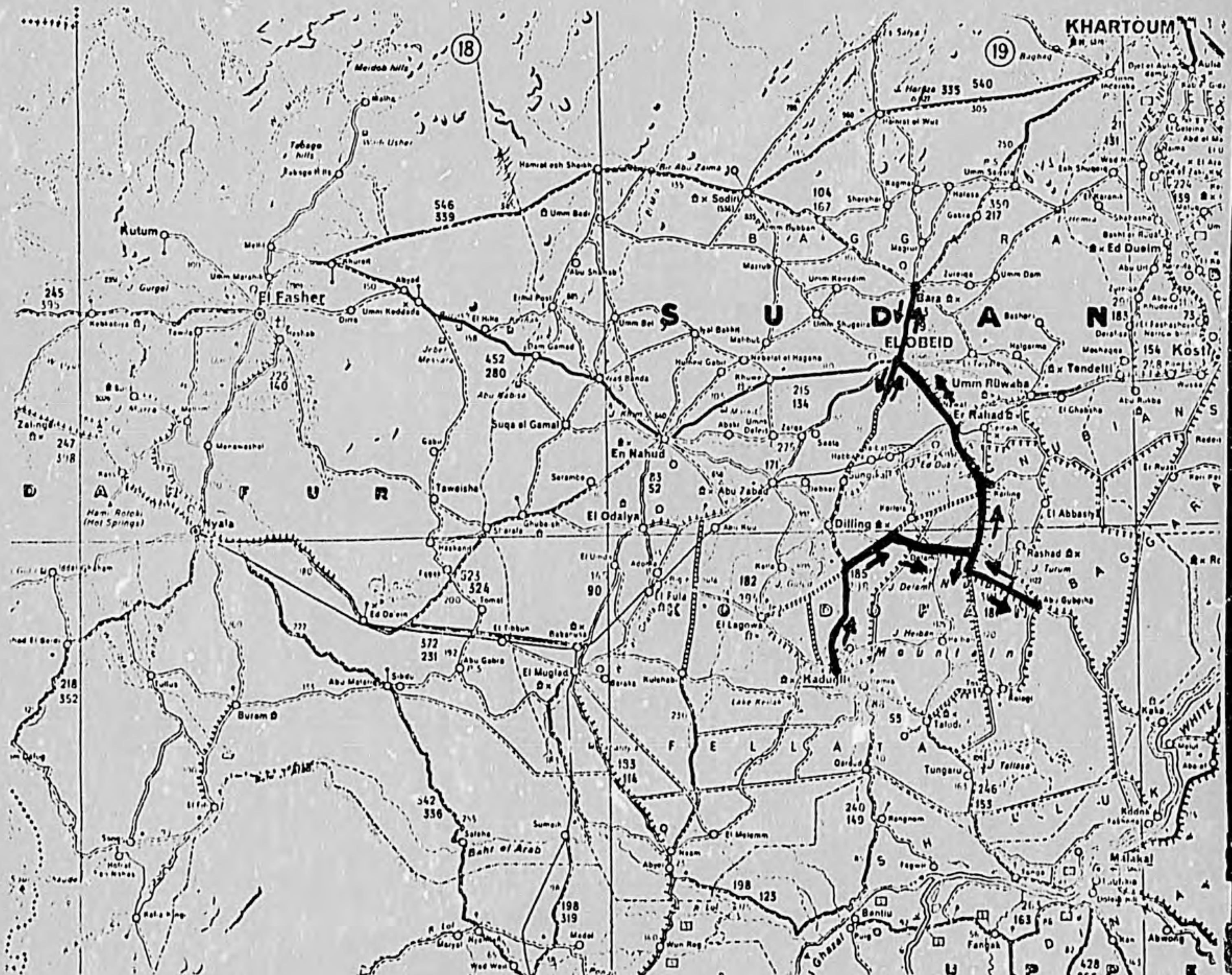

TABLE 1

Mean Weather Data for Kadugli, Sudan[a]

TEMPERATURE[b] MEAN Max.	Min.		RAINFALL[c] MEAN
°C			mm
36	17	January	0
38	19	February	0
40	22	March	1
40	23	April	17
39	24	May	77
36	23	June	125
33	22	July	154
32	22	August	150
33	21	September	143
36	20	October	86
38	19	November	6
37	17	December	0
37	21	Year	759

[a] Station location: 29° 43' East Longitude, 11° North Latitude

[b] Period: 1901 - 1940

[c] Period: 1941 - 1978

Source: Hunting Technical Service, 1980. S. Kordofan Central Districts Indicative Development Plan

TABLE 2

Mean Weather Data for El Obeid, Sudan[a]

AIR TEMPERATURE					RAINFALL	
MAXIMUM		MINIMUM		MONTH	MEAN	
EXTREME	MEAN	MEAN	EXTREME		1941-1970	1901-1940
---°C---					---mm---	
38.6	30.6	13.5	6.4	January	0	0
40.7	31.1	14.6	4.4	February	0	0
42.9	35.7	18.3	9.0	March	0	1
43.0	38.3	21.1	13.0	April	2	2
44.3	39.0	24.0	17.2	May	14	17
42.3	37.3	24.3	17.1	June	27	38
40.0	33.4	22.9	17.3	July	113	98
37.7	31.4	21.9	17.5	August	143	121
39.0	33.8	21.6	17.1	September	68	75
39.7	36.2	21.3	14.5	October	19	16
38.4	33.9	17.5	9.2	November	0	0
37.6	30.9	14.2	5.8	December	0	0
44.3	34.3	19.6	4.4	Year	386	368

[a] Station location: 13° 10 N latitude
30° 14 E longitude

Period: 1941 - 1970

Source: Grube & Zimmer, Inc., except for 1901 - 1940 Rainfall which is from Agriculture in the Sudan, J. D. Tothill (ed.)

TABLE 3

Location and Planted Area of Selected Horticultural Production Sites - Current and Potential, Kordofan, Sudan, March, 1981[a]

Location	Estimated Planted Area: Current	Estimated Planted Area: Potential	Expansion Potential[d]	Road Time from: El Obeid	Road Time from: Kadugli
	---feddans---[b]		%	---minutes---	
South					
Kadugli	-	-	-	360	0
Miribara	-	-	-	405	45
Badab	-	-	-	405	45
Abu Gubeiha	10,000	15,000	50	405	390
Khor Delaib	2,000	2,500	25	305	307
Rashad	6,000	7,500	25	520(est.)	510(est.)
Umm Berembeita	3,000	3,500	17	300	275
Abu Kharshola	3,000	4,000	33	240	331
Al Abasiya Tagaly	2,000	2,500	25	-	-
South subtotal	26,000	35,000	-	-	-
South Average	-	-	29	368	238
North					
Banjadeed	1,500	1,500	0	30	330
Bara	120	600	500	105	475
Er-Rahad	-	800	-	120	420
Al-Nahud	0	700	-	600	960
Abu Harraz	0	300	-	60	420
Khor Al-Abaid	0	700	-	30	330
Umm Ruwaba	-	2,000	-	240	540
North subtotal	1,620 (1,620)[c]	6,600 (3,800)	-	-	-
North Average	-	-	(137)[c]	169	496
TOTAL	27,620 (27,620)[c]	41,600 (38,800)			
AVERAGE	-	-	(40)[c]	275	358

a This should not be interpreted as a summary for the whole of Kordofan. It includes those stations visited, and it is based on the information given by individuals in the area. The survey team did not attempt to verify the accuracy of the information.

b 1 feddan = 1.04 acre = 0.42 hectares

c Excludes data from Er-Rahad and Umm Ruwaba

d Equals: $\frac{\text{Potential - current}}{\text{current}} \times 100$

TABLE 4

Horticultural Production Areas in Southern Kordofan, Sudan[a]

NORTHWEST	NORTHEAST
Dilling	Abu Kharshola
Al Tokma	Al Biteara
Al Farshiya	Khor El Delaib
Abu Seibaya	Rashad
El Foola	Umm Berembeita
Jungaru	Al Abasiya Tagaly
	Kabose

SOUTHWEST	SOUTHEAST
Kadugli	Abu Gubeiha
Miribara	Kalogi
Bardab	Talodi
Abu Seifeefa	Engartu
Umm Serdiba	Gardud Umm Radami
Lagowa	El Leari Sharig
	Seisaban
	Heiban/Al Azrag
	Al - Atmoor
	Muweilih

[a] Based on interviews and observations made by study team, Feb. 28 - Mar. 7, 1981

TABLE 5

Horticultural Crops Found in the Kordofan Region, Sudan

Popular Name Arabic	English	Scientific Name
Tebeldi (Gongoles)	Baobab	Adansonia digitala L.
Basal	Onion	Allium cepa L.
Tum	Garlic	Allium sativum L.
Shabat (shamar)	Dill	Anethum graveolens L.
Sapodilla	Sapodilla	Achras zapota L.
Qishta	Custard Apple	Annona squamosa L.
Heglig		Balanites aegyptica Del.
Lalobe	Fruit of Heglig	
Bunger	Beet	Beta vulgaris
Thalig	Swiss chard	Beta vulgaris var. Vulgaris cicla
Adas Sudani	Pigeon pea	Cajanus Cajan (L.)
Filfil	Sweet pepper	Capsicum annum L.
Shatta	Hot pepper	Capsicum frutescens
Papai	Papaya	Carica papaya L.
Senna mekka	Senna	Cassia acutifolia Delo
Soreeb	*	Cassia pinieca
Hummos (Kebkabeik)	Chickpea	Cicer arietinum L.
Handal	Bitter Apple	Citrullus colocynthis
Battikh	Watermelon	Citrullus vulgaris Schrad
Laymoon	Lime	Citrus aurantifola
Grapefruit	Grapefruit	Citrus paradisi Macf.
Yousifi	Mandarin	Citrus reticulata Blanco.
Burtogal	Orange	Citrus sinensis (L.) Osbeck
Melukhiya	JuteMallow	Corchorus olitorius L.

* Wild legume leaves similar to groundnut. Pods similar to cowpea.

Senat Gurum	Seeds of gurum	Cucumis melo L. Var. Agrestes
Shamman	Cantaloupe	Cucumis melo
Kheyar	Cucumber	Cucumis sativus
Aggur (Tibish)	Snake cucumber (gourd)	Trichosanthes cucumis melo var. flexosus
Qara	Pumpkins	Cucurbita spp.
Qara Kosa	Squash (Marrow)	Cucurbita spp.
Naal	Related to Ginger Grass	Cymbobogon nervatus
Mahrabeb	Related to Ginger Grass	Cymbopogon proximus
Gazer	Carrot	Daucas carota
Gergeir	Rocket cress	Eruca Sativa Mill.
Tien	Fig	Ficus carica L.
Shamar	Fennel	Foeniculum vulgare Mill.
Sara	Wild okra	Hibiscus spp.
Bamia (weika)	Okra	Hibiscus esculentus L.
Kerkadeh	Roselle	Hibiscus sabdariffa L.
Bambei	Sweet potato	Ipomea batatas (L.) Lam.
Khuss	Lettuce	Lactuca sativa
Henna	Henna	Lawsonia alba Lam.
Luffa (lif)	Loofah	Luffa cyclindrica (Lour)
Banadora (tematem)	Tomato	Lycopersicon esculentum Mill.
Mango	Mango	Mangifera indica
Tut	Mulberry	Morus indicus L.
Moze	Banana	Musa spp. L.
Rihan	Wild Basil	Ocimum spp. Gurke
Fasulia	Haricot bean	Phaseolus vulgaris L.
Nakhla (balah, tamor)	Date palm	Phoenix dactylifera L.
Daleib	African Fan Palm (?)	Borassus flabellifer L. var. aethiopum
Rigla	Purslane	Portulaca oleracea L.
Guava	Guava	Psidium guajava
Roman	Pomegranate	Punica granatum L.
Figil	Radish	Raphanus sativus L.
Khirwa	Castor bean	Ricinum communis L.

Bazingan Bodongan	Eggplant	Solanum melongena L.
Batatis	White potato	Solanum tuberosum
Mulaita	Leafy green vegetable	Sonchus oleraceous
Lubia helu	Cowpea	Vigna unguiculata (L.) Walp
Enab	Grape	Vitis vinifera L.
Sidir	Jujube	Zizyphus spinachristi Lam.
Nebaq	Fruit of sidir	
Dora Shami	Maize (corn)	Zea maize

TABLE 6

Varieties or Cultivars of Fruits and Vegetables Observed During Field Trip

February 28-March 5, 1981, Kordofan, Sudan

Crop	Variety or Cultivar[a]
Beet	Detroit Dark Red
Carrot	Chantenay Red Core
Cucumber	Beta Alpha
Eggplant	Black Beauty
Grapefruit	Foster, March
Guava	Local white, local red
Mango	Kitchener (local introduced cultivar), Alphonse, Abu Samaka, Shendi No. 1, Mabroka, Galbel tor, Mistibarr
Okra	Wild & cultivated lines
Squash	Zucchini, Dark green, Skandarani
Sweet pepper	California wonder
Tomato	Strain B, VF Ace 55, Ace VF, Strain B, improved, Mervelle, Money maker
Watermelon	Congo

a Unnamed cultivars not listed. In addition to those crops given in the table, local cultivars of the following crops are found in Kordofan: cowpeas, custard apple, hot pepper, jutemallow, lime, onion, orange, papaya, pumpkin, purslane, radish, roquette, and snake cucumber.

TABLE 7

Kerkadeh Planted Area in Northern Kordofan, Sudan, 1974 - 1980

Year	Planted Area
	(000) feddans [a]
1974-75	47.5
1975-76	4.1
1976-77	20.3
1977-78	22.3
1978-79	62.1
1979-80	78.4

[a] 1.0 feddan = 1.04 acres = 0.42 hectares

TABLE 8

Market Volume, Value and Price of Kerkadeh in El-Obeid Agricultural Products Market

1969 - 1980, Kordofan, Sudan [a]

Year	Volume	Value	Price
	(000) Kantars	(000) Ls [b]	Ls/Kantar
1969-70	28.4	321.3	11.3
1970-71	60.8	446.8	7.4
1971-72	22.2	82.1	3.7
1972-73	6.3	23.3	3.7
1973-74	1.7	11.0	6.4
1974-75	1.4	8.9	6.5
1975-76	0.8	4.3	5.2
1976-77	0.8	11.3	13.8
1977-78	1.6	38.1	24.4
1978-79	9.2	220.5	24.0
1979-80	6.4	200.5	31.5

[a] Approximately 70% of the Kerkadeh in Sudan is marketed in El-Obeid. The remainder is sold in Umm Ruwaba and Er-Rahad. Export transactions are conducted in the Khartoum market. Therefore, these data do not reflect a complete picture of Kerkadeh production in Sudan.

[b] Ls= Sudanese Pounds. In March, 1981, Ls1.000 = $2.00 for commodity transactions.

TABLE 9

Relative Importance of Fruit Crops in Production Areas

Visited by Survey Team

February 28 - March 5, 1981, Kordofan, Sudan

Location	Citrus	Mango	Guava	Papaya	Custard Apple
	---------- Rank in Importance ----------				
Kadugli	3[a]	1	2	0	4
Umm Berembeita	2[a]	1	0	0	0
Khor Delaib	2[a]	1	0	0	0
Abu Gubeiha	2	1	0	3	0
Kharshola	1	2	0	0	0
Abu Habil	Essentially no fruits				
Banjadeed	2	1	3	0	0
Bara	1	0[b]	2	0	0

a Primarily Balidy lime introduced by Kitchener.

b Indicates absence or negligible planting of crop.

TABLE 10

Relative Importance of Vegetable Crops in Production Areas

Visited by Survey Team

February 28 - March 5, 1981, Kordofan, Sudan

Location	Tomato	Green Onion	Hot Pepper	Leafy Greens	Pumpkin	Eggplant	Okra	Radish[a]
Kadugli	4	5	3	0	2	0	1	0
U. Berembeita			Few Vegetables					
Khor Delaib			Few Vegetables					
Abu Gubeiha	0[b]	2	4	3	1	5	0	0
Kharshola	0	1	0	2	0	0	0	0
Abu Habil	1	0	3	0	2	5	0	0
Banjadeed	1	0	4	0	0	2	0	0
Bara	1	2	0	4	7	6	0	3

[a] Other crops of importance at specific locations

		Group Rank
Abu Habil:	Cucumber and sweet potato	4
Banjadeed:	Carrot, sweet pepper, beet	3
Bara:	Carrot, beet	5

[b] Indicates absence or negligible planting of crop

TABLE 11

Indicative Requirements for WSARP Horticultural Program

STAFF

No.	Position	Location
1	Senior Scientist (pomologist or olericulturalist)	El Obeid
1	Assistant Scientist (B.S. degree to complement senior scientist)	El Obeid
4	Technical Assistants (Diploma or equivalent)	2 El Obeid 1 Kadugli 1 Abu Gubeiha
8	Research Assistants (Sr. high school graduate)	4 El Obeid 2 Kadugli 2 Abu Gubeiha
3	Labor Foremen	
6	Skilled laborers (propagators)	
20	Laborers	
	Clerical staff provided by stations	

TRANSPORT AND EQUIPMENT

No.	Item	Location
4	Pick-up Truck (4-wh drive)	2 El Obeid 1 Kadugli 1 Abu Gubeiha
1	Truck (for transporting supplies and seedlings)	El Obeid
3	Garden Tractor	1 El Obeid 1 Kadugli 1 Abu Gubeiha
3	Spraying Equipment Set	1 El Obeid 1 Kadugli 1 Abu Gubeiha

Table 11, Transport and Equipment (Continued)

No.	Item	Location
3	Sets of:	At each site
	Balance	
	Harvest containers	
	Seedling trays	
	Propagation equipment	
	Cultivation tools	
1	Lab Equipment set	El Obeid
	Ph. meter	
	Refractometer	
	Seed extractor	
	Blenders	
	Glassware	
	Cold storage	
	Ovens	
	Refrigerator/freezer	
AGRICULTURAL SUPPLIES		At each site
	Seeds	
	Fertilizer	
	Chemicals	
FACILITIES		
3	Nursery	At each site
	Water	
	Stores	
	Fencing	
3	Research Land	
	50 - 100 fd	El Obeid
	30 fd.	Kadugli
	30 fd.	Abu Gubeiha

APPENDIX A

MEMORANDUM

TO: Director General, Agricultural Research Corporation

FROM: Robert F. Harwood

DATE: December 15, 1980

SUBJECT: HORTICULTURAL RESEARCH IN THE KORDOFAN REGION

In developing our two year research program on plant production and protection for Kadugli Research Station, the requirements for the area of horticulture were not clearly defined. We concluded that it would be best to identify horticultural research objectives and priorities before a Sudanese horticulturist is located in Kordofan to start this research.

I am requesting that a committee in ARC be developed to make a survey of horticulture needs and opportunities in both North and South Kordofan and to develop a report recommending research priorities. Because of the previous association of Dr. James Riley with vegetable research at AVRDC, I specifically request that he be a member of this committee. I hope that the committee can be appointed soon to hold planning discussions on their method of operation and, if thought to be helpful, to schedule a tour of North and South Kordofan.

There are many areas that could be explored in setting up a horticultural research program, and I hope the committee would feel free to develop their recommendations. Topics that I believe should be considered in their review are:

1. The needs of home garden vegetable and fruit production in contrast with commercial market varieties.

2. The potential for introducing new vegetables (winged beans as an example) and fruits (avocados as an example) in Kordofan.

3. Possible seasonal prolongation of vegetable and fruit production for home consumption and marketing.

4. Defining vegetable and fruit preferences of consumers in Kordofan.

5. The possibility of kerkadeh production improvement.

If the committee decides upon a field tour of the Kordofan region, this should be completed, along with their final recommendations, before the next rainy season, say by the end of April, 1981. WSARP will provide travel support for up to five committee members making the tour.

If possible, I would like to attend at least the first meeting of the committee.

slr

cc: Osman Khalifa
James Riley

APPENDIX B

Report on Visit to Vegetable and Fruit Gardens in El Obeid Area (in 1973)

by

Abdel Mageed Yassin
Mahmoud Salih Hassan
Hassan Hag Abdulla

The visit was in response to a request from the cooperative farmers society in Bara locality. It was also extended to Bangadeed vegetable and fruit gardens.

A research team comprising a nematologist, a horticulturist and a soil scientist, flew on the 5th of May to El Obeid where they were cordially welcomed by Sayed Khogali Mirghani, the plant protection specialist, who joined and guided the team during the tour.

Bara Locality

Bara lies within a broad shallow depression about 60 km to the north of El Obeid. The gardens are established on the east and west ends of the town, and cover a total area of approximately 400 feddans. The gardens are irrigated from wells. The ground water table is at a depth of approximately 12 meters. The water with an electrical conductivity of 1000 micromohs/cm is considered poor quality irrigation water.

The soil is a sheet of loose red goz sands of varying thickness overlying a marl or clay strata. Few sites may have marl or clay exposed at the surface or have just been covered by desert creep. The soils are moderately to strongly alkaline with a pH varying between 8 and 8.8.

The farmers holdings are generally small (3-5 feddans). The major portion of the land is under vegetable crops such as tomato, eggplant, sweet pepper, hot pepper, onions, okra "Mulokhiya", "na'naa", cucumber, pumpkins, beet and radish. The fruits grown are various kinds of citrus, mango, date palm and grapes. Other crops such as berroem may also be grown in a three-year rotation.

There is, however, a general lack of horticultural advice in the locality. Initial layout of fruit orchards and tree spacing resulted in a chaotic mix of various kinds of fruit trees. The orchards are hardly penetrable.

1. Soil Problems. The major soil problems of the locality are related to the poor nutrient status of the goz sands as well as problems of availability

of micro-nutrients-zinc, molybdenum - as well as some of the macro-nutrients-phosphorus - as affected by high soil pH. Severe nutrient deficiency symptoms were observed, especially that of zinc causing die back of growing points in citrus trees.

2. Crop Husbandry Problems. The standard of husbandry is extremely poor. The small holdings are very weedy and bushes were allowed to grow under trees, area of plots containing trees are not proportional to size of trees. No pruning of old dead branches is ever practiced. Heaping earth against tree trunks - allowing termite attack to trees - is a common practice. Irrigation frequency is very high, at an interval of 3-4 days.

3. Pest and Disease Problems. As most of the vegetables were at harvest when the visit was undertaken, very few observations could be made. However, fruits of some of the tomato plants were heavily infested with the American boll-worm. Date palm smut (Graphiola phoenicis) was very heavy on date palm. Haluk - orobanche sp. was very serious on tomato, causing tremendous flower abscision, negligible fruit set and hence poor yield. Also, among the major pests were the plant parasitic nematodes. Three of the major genera were found in association with the rhizosphere or roots of nine crop plants among vegetables and fruit trees. Longidorus sp.: Causing stubby and swollen roots, yellow leaves and stunted growth were found associated with berseem, "Mulokhiya", na'naa and grapefruit trees. Miloidogyne sp.: root-knot nematodes - were found associated with the roots of tomato and egglant. The damage was severe and wide-spread.

The citrus nematode - Tylenchulus semi-penetrans was also found associated with the roots of yousofi trees with decline symptoms, but was not found in association with other citrus trees. Its spreads seems to be somewhat confined.

Bangadeed Locality

The site is about 25 km to the south of El Obeid. The vegetable and fruit gardens are established on the alluvial deposits of Khor "Mulbas" and cover an area of about 400 feddans. The major portion of the land is under fruit trees. The gardens are irrigated from wells. The ground water table is at about 9 meters. The soils are loamy sand overlying clay strata at a depth of 50-60 cm.

Horticulture in Bangadeed suffers from problems similar to those enumerated for Bara, but a major problem of the locality is related to the presence of clay strain below a 50 cm thick of highly permeable sandy layer with low water holding capacity. The surface sand dries up very quickly after irrigation. Hence, the farmer is obliged to apply irrigation water every 3-4 days. However, for vegetable

production under such soils increasing the irrigation interval for more than 5 days would certainly interfere with plant growth. On the other hand, such a high rate of water application would in time lead to the formation of a perched water table on the surface of the underlying clay strata, creating a barrier of water logged and anaerobic environment for deep rooting crops such as citrus trees. For shallow rooting crops the effects of such a water table might not appear for a considerable time. But, time would come when the water table will be at or very near the soil surface. As for deep rooting crops, the hazards of water-logging were already observed in some citrus trees where root rotting has resulted in a partial or total death of the trees.

General Recommendations

Farmers were instructed with proper husbandry practices where immediate advice was needed, particularly with respect to:

1. Pruning old dead branches;
2. Making low circular terraces around tree trunks instead of heaping earth against the trunks;
3. Areas comprising trees should be in proportion to tree size to facilitate proper irrigation;
4. Pulling Haluk before it sets seeds and burning the trash;
5. Weeding of vegetable plots and general clean-up of the orchards.

Horticultural advice should be made available to the farmers. At least a scale-H-horticulturist should be stationed at Bara. Bangadeed could be commanded by the horticultural staff in El Obeid.

Advice should be given with respect to:

1. Seed quality;
2. Seed rate;
3. Sowing date;
4. Fertilizers and manure application;
5. Pest and disease control measures.

If vegetable and fruit production is to continue, particulary in Bara, fertilizers application, i.e. NPK, must immediately be considered.

In general, application of animal manure should become an indispensable practice in both Bara and Bangadeed localities.

The problem of water-logging in citrus orchards can be reduced by increasing the watering intervals up to 15 days. But the long term effect of a developing water table can only be reduced by installing a drainage system. This matter will

need further investigation.

The queston of observation trials on fertilizers application and watering intervals is open to further consideration.

The team is of the opinion that another visit to the area during the growing season is beneficial.

The team is indebted to Sayed Khogali Mirghani and his staff for cordial welcome, indispensable guidance and supply of transport during the visit.

References

1. Chapter XXIX, Kordofan Province by G. F. March in: Agriculture in the Sudan, 1948, J. D. Tothill (ed).

2. Prospectives for Agronomic Research in Africa, 1976. National Academy of Science, Washington, D. C.

3. S. M. Virmani, Agroclimatologist, ICRISAT, Personal communication.

4. Development Study of Western Sudan Agricultural Research Project Stations. Grube, Zimmer, Inc., Portland, Oregon, U.S.A.