APR 10 1985

RECOMMENDATIONS FOR THE CARE SOMALIA/UNICEF STOVE COMPONENT OF THE VILLAGE FORESTRY PROJECT IN NORTHWEST SOMALIA

John Selker
Laurie Childers
UNICEF Technology Support Section
East Africa Regional Office
March, 1985

CONTENTS

1) INTRODUCTION

2) REGIONAL ISSUES
- Fuel Consumption
- Market Conditions

3) RESOURCES
- VITA
- American Friends Service Committee
- Malene Technical Institute
- Partnership For Productivity
- UNICEF Technology Support Section

4) RECOMENDED PROGRAM
- General Recommendations
- Village Specific Recommendations
- Evaluation
- Timeline

5) RECOMMENDED DESIGNS
- Design Constraints
- Designs
- Expected Design Evolution

6) DISCUSSION OF OTHER OPTIONS
- Ceramic
- Mud
- Metal
- Combined Materials

1. INTRODUCTION

The Northwest Region of Somalia presents a unique set of opportunities and constraints for the dissemination of improved stoves. The need for reduction of fuel consumption is felt by all households, with regional deforestation proceededing at unprecedented rates. The interest in fuel saving stoves is very high among women. Also, the project has unusually high quality support available, as well as having a solid set of basic stove designs to work from.

At the same time, the challenges presented are in many ways staggering. This is the first stove program of its kind in the Northwest Region. The stove designs presented in this report have yet to be tuned to the local cooking habits and production capabilities. Artisans must be located and trained in the production of the stoves, and finally, the stove will have to be introduced into a intransigent tradition-bound market structure.

The consultants believe that the project is both feasible and imperative. The approach must be entirely goal-oriented, which will require a dedicated, motivated staff. From the consultants' observations, the present staff is uncommonly attuned to these facts.

2. REGIONAL ISSUES

Fuelwood Consumption

The scarcity of fuelwood is felt acutely by the people who live in the villages involved in this project. Most of the villages have been established within the past fifteen years, thus the deterioration in the local environment is within the memory of the community members. Individuals frequently comment that they are now travelling twice as far to find fuel as they did only five years ago. This has greatly increased the burden on the women and children in this region. It is very common to find households turning to the more available charcoal for cooking. This trend has accelerated the overall rate of deforestation, as well as put further economic demands on these cash poor-families.

The villages involved in the project are of widely different nature and circumstance. This diversity demands a flexible, sensitive dissemination strategy. Most of the project villages still cook primarily on wood, and should be encouraged to continue to do so. These villages are endowed with marginally adequate fuelwood resources, and will be able to maintain the best overall living conditions, and local environment, if wood continues to be their primary source of fuel. Both efficiency and safety can be improved readily with the introduction of an improved cooking appliance.

Many of the project villages depend on a mixed fuel supply of wood and charcoal, with several depending primarily on charcoal. Unfortunately, the production of charcoal in Northern Somalia is very inefficient, which in effect multiplies the consumption of trees for each amount of charcoal consumed. In addition, the stoves presently used for cooking with charcoal are among the least efficient in Africa. For these reasons, improved efficiency charcoal stoves are a vital addition to the households in this area. Care should be taken not to induce the transition from cooking on wood to the higher status and convenience charcoal. This will require sensitive evaluation of the communities, as well as emphasis on wood stoves during the demonstration phase of the project.

Market Conditions

For improved cookstoves to have a lasting influence, they must fit and be accepted into the existing market structure. Traditional metal charcoal stoves are found in almost all households in this region, and thus the best possibility for marketing improved stoves is to introduce improved metal stoves into this pattern.

In the case of the villages within ready access to Hargeisa, the metal goods are largely purchased in town, and brought back to the village by individuals. In this case, women will generally order the specific stove that they would like to buy, at which time the metal smith will produce the stove. Since materials are difficult to obtain in large quantity, women will often bring their own rectangular biscuit tin from which the stove will be made. The women select the design based on their own cooking experience, and on what their neighbors have found to be successful. At present there are only three popular styles of cookers (see figures 1,2, and 5).

Metalsmiths can be found in some of the larger and more isolated villages. The market mechanisms are for all practical purposes identical to those of the Hargeisa market, with material acquisition being an even greater difficulty. The craftsmen are generally involved in a wider range of products, which leads to lower overall quality.

The present market for cookstoves is for the most part limited to the sales of charcoal stoves. There is one simple low efficiency wood stove (fig 5) which is commonly available, but represents less than 10% of the total stove market. As this program will be focused primarily on wood stoves, it will be the responsibility of the project to create an awareness and demand for the new stoves. Development of this market will be one of the major roles of this project

3. RESOURCES

This project is in the unusual position of having a great variety of people and agencies which have expressed an interest in assisting. Effective use of these external organizations for specific tasks will greatly increase the effectiveness of the project.

VITA

P.O. Box 3403

Mogadishu

Contacts: Jim McCormick - Project Co-director
Mohamed Nur Qabile - Project Co-director
Hank Cauley - Project Advisor (previously Project Director)
Mohamed Hassan Nur - Technical Director
Dahir Ahmed Kolonbi - Prototype Development, Testing
Mohamed Ali Noor - Training, Ceramics

VITA has the greatest experience and expertise in stove design in Somalia. They will be especially valuable in the first six to nine months, while the stove designs are being finalized. They should assist the UNICE/CARE Somalia project in the following ways:

1) Send new stove designs to Mogadishu for brief lab testing. Initially all of the selected designs should be tested, then in the event of major design changes, the stove should be retested in the lab. An abbrieviated testing approach is recommended, where each stove is put through 3 to 5 tests, until repeatable data is obtained. It is recommended that these tests be conducted by Dahir Ahmed Kolonbi working with the CARE stove coordinator. In this way the stove coordinator receives valuable training, and in Mogadishu can make use of the complete VITA staff as needed.

2) Have Hank Cauley visit the Project in Hargeisa to give advice in setting up the stove component. This visit should take place after the CARE Stove Coordinator has been hired, but before April 15, 1985, when Mr. Cauley leaves the country.

3) Have Mohamed Hassan visit the project for one or two weeks every two months. During these visits, Mohamed Hassan will assist in any stove redesign which is needed, and give general programatic assistance.

American Friends Service Committee (AFSC)
AFSC/QPS (Hargeisa)
P.O. Box 2925
Mogadishu, Somalia
Contacts: Chris and Clare Rolfe

Clare Rolfe has been developing a small-scale ceramic cookstove project in the Dariaman refugee camp for over two years. This effort is by far the best developed portable cookstove project in the region. They have recently begun work with the same simple metal woodburning stove that CARE is considering. The cookstove coordinator should stay in close communication with this project, sharing design improvements and lab and field test results. A working visit of one or two weeks to the camp would be of assistance to the AFSC project, and would be valuable training for the stove coordinator.

Halene Technical Institute
Hargeisa

The Halene Technical Institute has worked extensively with UNICEF over the past two years. John Selker spoke with the school director, the metal shop director, and the wood shop director. All of these individuals expressed continued interest and enthusiasum in working with the UNICEF/CARE Somalia project. The Institute offered to produce all needed prototypes and production patterns without charge, provided that CARE covers the cost of materials. This assistance will be extremely valuable, and the Institute should be kept informed of the projects needs.

Making stove prototypes with local metalsmiths is difficult, and can lead to later confusion as the design evolves. The local metalsmiths are very capable of making a stove given a sample and patterns to work from.

Partnership For Productivity (PFP)
AID Guest House
Hargeisa
Contact: David Peace

David Peace of PFP was very interested in using the CARE metal stove designs as products for PFP's refugee business development project. David was given one stove as a sample. Although PFP's ultimate role in stove production is unclear at this time, David has expressed personal interest in assisting CARE where ever possible. David's backround in mechanical engineering and extensive work in Africa make him a valuable consultant. He should be contacted particularly in cases of production problems, or structural changes in the stove design. Also, as several of the project villages presently buy their metal stoves from refugees, it may be advantagous to collaborate in such cases.

UNICEF Technology Support Section
East Africa Regional Office
P.O. Box 44145
Nairobi, Kenya
Contacts: Philip Hassrick - Program Officer
Frans Claassen - Technical Director

This office is dedicated to giving technical assistance to projects in East Africa, and has a history of aiding stove work in Somalia. They can be approached on two levels. In the case of simple design advice, they will correspond by mail, and have the facilities to do work in Nairobi. The staff (particularly Mr. Claassen) has extensive experience with cookstove design, and thus may be very helpful. The office can also sponsor site visitations by consultants from various diciplines, as needed. Such visitations are very costly, and are only recommended when major obstacles have not been overcome using the locally available support.

4. RECOMENDED PROGRAM

General Recomendations

GOALS Create self-sustaining production and dissemination of cockstoves with improved safety and fuel efficiency

Increase awareness of fuel consumption as a factor in deforestation, in support of the Forestry Project.

METHODS

Stove Design Development- An ongoing, field oriented approach based on local response, verified by brief lab. tests.

LAB TESTING- Initially, all of the recommended designs should be lab tested in Mogadishu, at the VITA facilities. This is to serve as both a verification of the efficiency of the designs, and as a training for the CARE stove coordinator.

Further need for lab testing will be minimal, as major design changes in the stoves are not expected.

FIELD TESTS- The critical information from the field will be primarily qualitative.
Do the women enjoy using the new stove?
Do the women feel that the stove is saving a significant amount of wood (or charcoal)?
Do they feel that the cost was reasonable?
These are the issues that will determine the long term success of the effort.

Quantitative tests will also be useful to obtain a more objective measure of the impact of the improved stoves. This type of field test should follow the example of those conducted by VITA Somalia. Briefly, this entails measuring fuel consumption of families using the traditional cooking methods (a control group), and those using the improved stoves. Calculation of per capita fuel consumption for each group gives basis for estimation of the actual fuel savings derived from the use of the improved stove. It should be noted that these tests are time consuming, and only useful as general indicators. High-confidence data is difficult to obtain due to the social complexity of the setting.

Stove Design Development, cont.

CONTROLED DISTRIBUTION- As soon as possible, prototype stoves should be made in numbers to be distributed to women in the field for evaluation. The women selected for this should have a history of good work with the forestry component, and be enthusiastic to the concept of improved cook stoves. The stoves can be given as bonuses for planting many trees. Since these stoves are prototypes, they should be replaced in the event of major design changes. These women will be valuable exponents of the stoves in later phases of the project, and should be supplied with high quality stoves. Draw the women into the design process as much as possible, asking their ideas for improvements, and discussing options which are being considered.

CONTINUED FEED BACK- All of the people in contact with the stove component will have ideas and recommendations for the design of the stove. Keep a list of the ideas presented for discussion. Simplifications and improvements should be expected through the course of the project. New ideas should be tried, as they may spawn significant improvements to the designs.

Dissemination Strategy

ARTISAN TRAINING- Once acceptable designs are developed metalsmiths must be trained to produce the new stoves. Each metalsmith should be supplied with a set of stoves (to serve as models) and production patterns for all of the parts of the stoves. Small variations in construction are to be expected, and should not be corrected, so long as the finished product is of high quality, and follows the dimensions and overall structure of the model stoves.

The metalsmiths should be thoroughly convinced of the advantages of the new stoves, as they will be important exponents of the new stove design. Select enthusiastic individuals if possible. Each metalsmith should keep one stove of each design to be left in his shop for women to see and order from.

Dissemination Strategy,continued

VILLAGE DEMONSTRATIONS- It will be the responsiblity of the CARE staff to inform the women in the villages of the advantages of the improved stove design. This is the first step in creating a demand for the new stove. To accomplish this, village demonstrations, where stoves are shown in use, and sold, should be conducted. The improved stoves should be used side by side with their traditional counterpart, cooking a simple dish. The stoves start with identical amounts of fuel. The actual fuel consumption is easy to compare as the viewers see the pile of wood of charcoal next to the traditional stove dwindle faster than the new stove. Each village should have a series of demonstrations, to allow people time to evaluate and purchase the new stove.

The stoves sold at these demonstrations should be purchased from the locally trained metalsmith, to act as seeds for later private sector dissemination. At the demonstrations, people should be told where they can buy the stoves in their local markets.

Followup

The project villages are small enough to allow personal followup. Using the names collected during initial sales, check on the housholds after one month, then again after 6 months. The findings from these visits will be primarily qualitative, and should include the following:

*Do the women believe that the stove is saving fuel?

*Is the stove the primary cooking appliance, if not, why?

*Is the stove proving to be durable? What is breaking first?

Of course, the findings should be used in future work as they apply.

Village-Specific Recommendations

The villages included in this project differ widely in fuel use patterns, local production skills, and economic base. For these reasons, each setting must be approached in light of its own character.

CASE 1: Village like Haraf, where:

* The village is dependent on an outside market for metal stoves (in this case Hargeisa) and,
* wood is the primary cooking fuel.

Select most frequently visited nearby metalsmiths for training. In the case of Haraf, this will be difficult to do, since shoppers may well go to any of over 50 metalsmiths in Hargeisa. You should then select smiths who are promenent, and then tell people how to find them in Hargeisa. Since the town cooks primarily on wood, only demonstrate the wood stoves.

Later, if there is popular demand, you might introduce the improved charcoal stove. However, converting a person from using a traditional three stone fire to an improved charcoal stove will in fact increase the net amount of wood consumed by the family. In addition, charcoal use puts a drain on the family economy, which can reduce family nutritional levels. For these reasons, it is advised that such villages be introduced exclusively to the improved woodstove.

CASE 2: Towns like Dhubato which:

* depend on larger town for metal stoves(in this case from Hargeisa) and,
* cook both on charcoal and wood.

As in case one, the metal work will have to be done in Hargeisa. Since a significant number of families cook on charcoal, the charcoal stove should be demonstrated. Emphasis should be put on the advantages of cooking on wood, including:

* Saves money so you can spend more on food.
* Saves trees since you burn the wood directly, instead of twice (once when the charcoal is made, and once when you cook).

A brief dicussion of the amount of wood required to make charcoal might be in order at this time (in this region, 5/6 of the cooking potential is lost when the wood is converted to charcoal). It is also worth mentioning that the people in this region are trained not to cut down live trees, and that almost all of the charcoal is produced from live trees.

Many other more subtle differences will be found between villages. Rather than giving many case examples, simply note the general rule that each village should be considered individually. Choose the type of woodstove to focus on by the economic level, and skill level of the local metalsmith. Experiment with different general approaches to demonstation between villages to find out which are most successful.

Evaluation

A) **STOVE SEEDING.** If 5% of the households obtain stoves by the completion of the demonstrations (including those given away), then seeding will have been sucsessful.

B) **MARKET PRESENCE-** If 50% of metalsmiths in markets frequented by villagers are displaying improved stoves within one month of village demonstration, then there is sufficient market presence.

C) **STOVE ACCEPTANCE-** If 10% of village households are using the improved stove six months after the village demonstration, this will indicate successful dissemination through traditional market channels.

D) **FIELD PERFORMANCE-** If women feel that they are saving 1/3 compared to their previous cooking habits, this will indicate substantial improvement. If field tests show improvements of 25%, the design is adequetly efficient in the local cooking conditions.

E) **MARKET SHARE-** If after one year the market share (improved stoves sold as percentage of all stoves sold) for improved stoves grows, and improved stoves continue to be sold at at least 1/3 of all local metalsmiths shops, then improved stoves have sucsessfully entered the long term private market.

If charcoal stoves are selling with 1/4 the frequency of traditional metal charcoal stoves, then they have successfuly entered the long term market.

Sample Timeline

A timeline of activities and goals will be a valuable tool in maintaining the momentum of the project. Based on the expected activities in the forestry component of the project, and the other project inputs, this sample timeline was produced.

Month 1 (April 1985).....**Ground work set .....**

* Begin advertising and interviewing to fill the position of stove component coordiator.
* First prototypes are available.
* AFSC is field testing the 1/2 biscuit tin woodstove
* Make 15 samples of the Modified Haraka stove, the Dahir stove, and the Haraf stove to give to women for feed back.
* Send one Modified Haraka stove to AFSC for comments.

Month 2 .....**Stove Coordinator introduced to project.....**

* Hire Stove Coordinator (SC)
* SC visits AFSC to assist in field work, and receive practical training.
* SC meets all local resource people (listed in section 3).
* SC collects feed back from users of improved stoves, and makes appropriate design changes. Has updated version produced at Halene Technical Institute for second sample distribution.
* SC visits Action Aid stove project and staff for observation.

Month 3 .....SC gets designs 80% finalized.....

* SC goes to Mogadishu for two weeks for lab testing, training. Recieves copies of major articles on stove design and dissemination from VITA.
* Hire extentionist to be devoted to stove project, assisting the SC.
* Produce supplies for village demonstrations.
* Collect feedback from stoves given to women.

Month 4 .....SC up to speed on stoves.....

* Make design changes based on field response.
* Have Mohamed Hassan from VITA visit project to assist in design changes, and establishment of field program.
* Select village for first demonstrations. Train local metalsmith, make arrangements with local authorities for demonstrations.

Of course, the use of a time-line is entirely up to the individuals involved with the project. The consultants do, however, stress that such planning and assessment aids have been very successful in other stove programs. The consultants also recommend that the stove component should adopt a bi-monthly planning strategy modeled on that presently in use by VITA's stove program. To this end, Hank Cauley of VITA, has offered to visit the CARE project in mid-April to assist in establishing the project. Mr. Cauley's inputs would be very valuable at this stage in the project, as he has directed two major stove programs in Somalia, with very good success.

5) RECOMMENDED DESIGNS

Design Constraints

The following design constraints were used for the basis of the recomended designs. Since they are based on a relatively short exposure to the region, they should be viewed as a starting point, to be modified and added to as appropriate.

WOODSTOVE

PRICE -	Low income household	50-80 sh.
	Mid income household	120-200 sh
	Upper income households	Will not cook on wood.

MATERIAL PREFERENCE - (see section six for further disscusion)

First Choice- Metal (durable, light, available, easy to train artisans in new designs)

Second Choice- Ceramic (inexpensive, available in some areas, fragile, difficult to train artisans and to maintain quality control)

Third Choice- Mud (low status, non-portable, difficult to train artisans)

FIRE BUILDING STYLE - Women in this region are firmly entrenched in their style of fire building. Of primary importance to this project is the traditional use of ash in controling and preserving the fire. Efforts to introduce stoves with grates in this area have found no success. Women will simply let the ash build up until the grate is completely covered, and thus useless.

AVAILABLE EXTENTION RESOURCES- The stove component of this project is greatly constrained by its small staff size. The stove design must be simple enough to be constructed by a local artisan with little training input or quality control.

AVAILABLE PRODUCERS- (see section six of this report for further discussion)

Sheet Metal- informal sector artisans, common.

Ceramic- informal sector artisans, not common (few clay deposits in NW region).

Mud- User production, not traditional.

CHARCOAL STOVE

PRICE-	Low income families	50 sh + biscuit tin
	Mid income families	150-350 sh
	High income families	350-550 sh

MATERIAL PREFERENCE-

First choice- Soapstone. Durable, high status, excellent insulator, expensive.

Second choice- Metal. Sturdy, light, medium price, available.

Third Choice- Ceramic. Inexpensive, fragile, available in some areas.

FIRE BUILDING STYLE- The charcoal is lit using an ember which was saved from the previous fire, or borrowed from a neighbor. The fire is then fanned vigorously from the top to start the rest of the pile. The stove is periodically lifted and shaken to clear the fire of ash, and maintain a high heat output. The temperature of the fire is reduced by adding ash to the top of the fire, which reduces both air supply, and radiant exposure to the pot bottom. At the end of cooking, the embers saved by completely covering the pile with ash. Embers may be kept alive for many hours in this way.

AVAILABLE EXTENTION RESOURCES- Same as for woodstoves.

AVAILABLE PRODUCTION- Same as for woodstoves, with the addition of the improved soapstone stoves being imported to the North West by VITA.

Designs

WODSTOVES

The "HALF BISCUIT TIN STOVE"
Price: from used tin, 75-80 sh; from fresh metal, 110-120 sh.
Expected Efficiency: 25% improvement from open fire.
Life expectancy: 12-24 months.

For low income families, we recommend the "Half Biscuit Tin" stove (see figure 7). This stove was designed for use in the Dariaman refugee camp, to be produced by local metalsmiths. At the time of writing this stove is being used in field trials under the direction of the AFSC/QPS project in this camp. Initial response was positive, but design changes may be needed in the pot support configuration.

The stove can be made from either half of a used biscuit tin, or fresh sheet metal. The stoves made from fresh metal are seen to be substantially more durable, and thus may be prefered despite the higher price. Local metalsmiths use biscuit tins as the basis of many of their products, and thus are very adept at working in this form. Due to the recent deterioration in the regional economy, biscuit tins are becoming less available. It is very common to see products made from fresh metal in the exact proportions of the biscuit tins. For these reasons this design will require minimal retraining of artisans.

In pricing, artisans are very quick to see the simplicity of the design, and will produce the stove for exactly one half of the price of the traditional full buscuit tin charcoal stove. In the same way, we feel that consumers will be quick to recognize the value of this stove, which is half of the price of any other stove on the market, and uses the freely available wood, rather than the costly charcoal.

The "DAHIR" stove.
Price: 150-220 sh.
Expected efficiency: 30% improvement over open fire.
Life expectancy: 3-6 years.

The Dahir stove design (figure 6) is based on the only traditional metal woodstove observed in the region. The basic structure is provided by the traditional stove: a thick metal ring supported by three legs, which fold over to become potrests. The efficiency of the stove is improved in two ways. First, enclosing the fire prevents excess cool gasses from mixing with the flames, and keeps the flames protected from breezes. The second feature of the stove is the metal wall protecting the pot itself. This increases flame contact with the pot, thus increasing the efficiency further.

The Dahir stove costs only 30% more than its traditional counterpart, which quite common in this area. Women who use the traditional metal ring stove have been attracted to the design because of its convenience and durability. Both of these features are maintained in the improved version. The price of the stove does limit its audience, but it is within the price range of at least 80% of the families in this area. This fact is born out by the fact that over 90% of households already own charcoal stoves of the same cost.

ALTERNATE CHOICE

The "HARAF" stove
Price: 175-250 sh.
Expected Efficiency: 35% improvement over open fire.
Expected Lifespan: 12-24 months.

The Haraf stove (figure 8) is given as an alternative design due to its higher cost and shorter life expectancy. It also requires more fresh metal than the two previous designs. At the same time, it is a simple stove, and combines several attractive features which might be well accepted in the villages.

The Harar stove contains all of the ash from the fire, which keeps the cooking area clean. Many women expressed that this waa a very desirable feature. Also, the stove is taller than the other two, which is characteristic of the local traditional sheet metal stoves.

CHARCOAL STOVES

The "MODIFIED HARAKA STOVE"
Price: 275-350 sh
Expected efficiency: twice that of traditional metal stove.
Expected Lifespan: 12-24 months (50% longer than traditional)

This stove (figure 3) is a simplified version of a stove which has been tested extensively in Kenya, by UNICEF. For the Somali application the number of parts in the stove was reduced by 30% to lower the production cost. The design presented here should have efficiencies as high as the original Kenyan version. This design was come upon after two stages of redesign, with the VITA staff in Hargeisa. It is likely that further changes will be needed, but the basic design seems to fit quite well in with the local production and cooking patterns.

During cooking, the stove's outside remains below 200 degrees centigrade, and the handles are cool enough to be used without discomfort. The stove's wide base makes it very stable. Overall, this is an exceptionally efficient and safe stove, with a relatively low price.

The "IMPROVED SOAPSTONE STOVE"
Price: 450-550 sh.
Expected efficiency: twice that of the traditional metal stove.
Expected lifespan: Up to 20 years.

The improved soapstone stove has been under development in Somalia for the past 18 months by the VITA stove programs technical staff. This stove remains unsurpassed in combining efficiency, convenience, and longevity. VITA will begin sponsoring the importation of the stove from El Bur to the Hargeisa area starting in April of this year.

The only drawback of this stove is its cost. Although the VITA staff is confident of the value of the stove, it remains to be seen if the Somali cooks will see the price as justified. Particularly with the present economic strain the area is feeling, it is unlikely that this stove will be widely affordable by the families in the villages involved in this project. Despite this, it is worth bringing several of these stoves into the villages to get the women's response to the stove. Since the stove is being manufactured and transported to Hargeisa, it would take very effort to do this, and would be valuable support for the VITA project.

Expected Design Evolution

These designs are presented as starting points. They were developed with the local needs and habits in mind. They are not finished. Each of these designs needs to be taken to the villages for user feed back. Changes will be needed, due to either production problems, problems in use, or even appearance. Through the course of this project it will always be neccessary to let the design evolve: this is a natural and enjoyable proccess.

6. DISCUSSION OF OTHER OPTIONS

To put the recommendations of this report into context, it is valuable to look at some of the other options for stove designs which are available. Although most cookstove development work has been underway only in the past seven years, there is a very large body of experience to draw on. It would be very worthwhile for the people involved in this project to read over a few case histories of other improved stove projects to help put their efforts into perspective. Such documents are readily available from the VITA office in Mogadishu.

Ceramic

For this project, the most feasible option besides a metal stove is a ceramic stove. Pottery stoves are traditional in Somalia. Ceramic is usually considered for woodstoves rather than charcoal stoves due to its short lifespan and low cost. People who can afford charcoal can afford a stove of more durable material.

In the North West Region, clay deposits are few and far between, Hargeisa potters transport clay from as far away as Boroma. The clay is non-plastic and difficult to work. When properly fired, however, it is probably better for stoves than clay in southern Somalia. Pottery traditions in the NW vary considerably from the south in both design and construction methods. North West Region potters are considerably slower and their tradition much less developed. Potters were located in Hargeisa, Dhubato, and Dariman and DAM refugee camps.

In 1984 the Dariman potters made about 35 ceramic woodburning stoves (see figure 11) with technical help from VITA. These were field tested, as showed a ready market if the stoves could prove durable. During the consultant's visit In 1985, several days were spent with the Dariman potters training them to build the latest VITA design. The new design (figure 12) should overcome most of the problems encountered earlier, and the potters received the template and mold with enthusiasm. However, the effort necessary for thorough training and quality control is beyond the scope of the UNICEF/CARE project. Dissemination of this stove should only be undertaken in the event that the VITA staff has been able to do thorough training of potters in the NW. The CARE stove coordinator could then demonstrate the stoves in villages within market range of the producers.

Mud

Stoves constructed of clay with sand or fibers added have been built in many parts of the world. Most have met with limited success, if not outright failure due to lack of portability, improper soil mixes, and/or poor construction. The amount of training and labour required makes mud stoves far more expensive than was first thought.

Action Aid is presently completing a 2-year mud stove project in 5 refugee camps outside of Hargeisa. Small single-pot stoves, coated with cement (figure 13) were built in kitchens, and very large single-pot stoves were constructed in supplementary feeding centers at each camp. At Ariadayes, the small stoves were rejected outright in one section, and used and maintained in others, with no apparent reason for the different receptions.

The UNICEF molded mud "Rafiki" (figure 14) stove overcomes some of the training and quality control problems. Due to the semi-nomadic lifestyle of many villagers, and the relative wealth of the more stabile folks, in addition to the above-mentioned problems, mud stoves are not considered a viable option for the UNICEF/CARE Village Forestry Project.

Combinations of Materials

This is a large category of stoves that includes mud stoves with metal tops and portable ceramic/cement/metal "bucket" stoves. The latter are an established tradition in China and Thailand and have recently been produced in Kenya.

Because a relatively sophisticated system of production is required, with both training and quality control needed in the ceramic, metal, and assembly aspects, this option is not recommended for the project at this time. In future years it might be a consideration, as the stoves produced can be of higher efficiency, durability, and safety when done correctly.

Metal

One other metal stove design (figure 9) was developed using the soybean oil food aid cans distributed in refugee camps. In some camps these are found in abundance, and can be bought for about 10 shillings. The stove was designed to be a cheaper version of the "biscuit tin" stove it resembles.

Because of the lower status and increased labor required to construct this model, it is not recommended as having marketing potential in the villages.

FIGURES

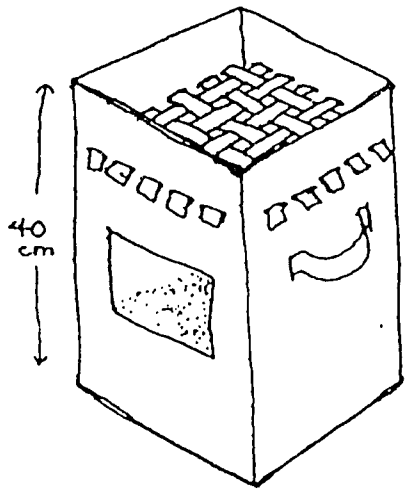

Fig. 1
Traditional NW Somalia Metal Charcoal "Biscuit Tin" Stove. Stoves sell for 150 to 200/=.

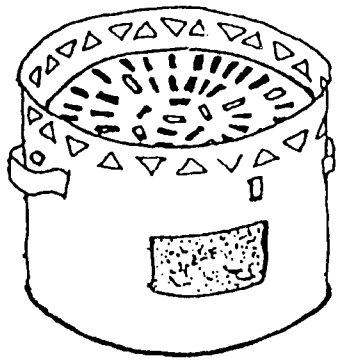

Fig. 2.
Traditional NW Somalia Charcoal Stove. Made in varying sizes for both households and restaurants, largest ones from 1/2 an oil drum.

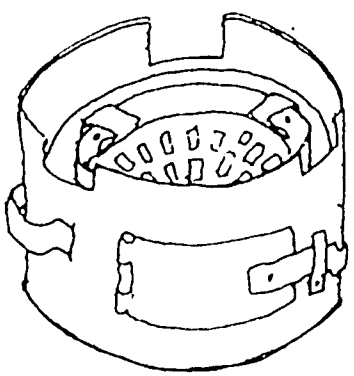

Fig. 3
Modified UNICEF "Haraka" Charcoal Stove.

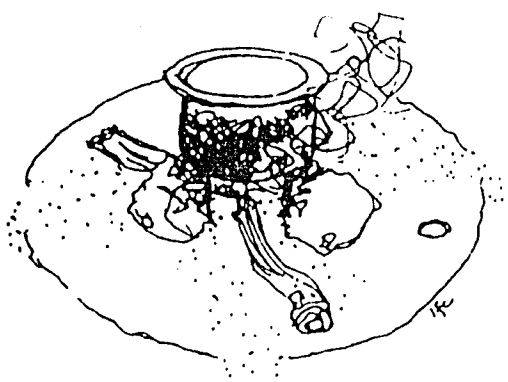

Fig. 4
Traditional Three-Stone Cooking Fire, often built on scrap metal.

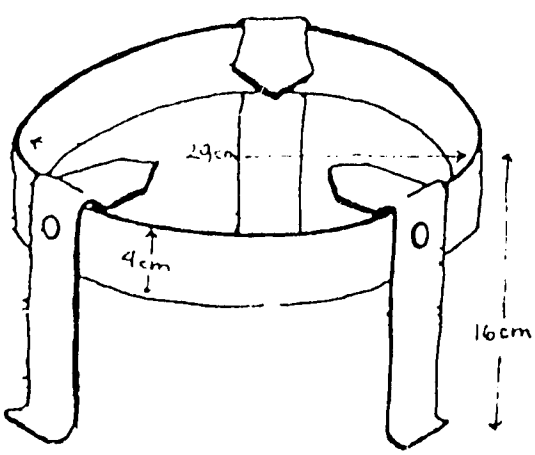

Fig. 5
Traditional Metal Ring Woodstove. Made of 3 mm thick steel.

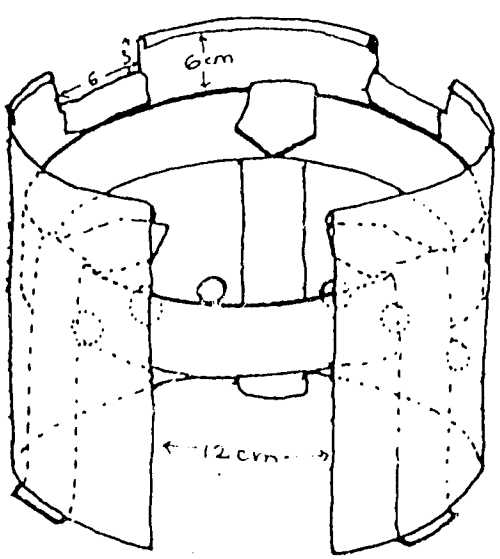

Fig 6
"Dahir" Stove

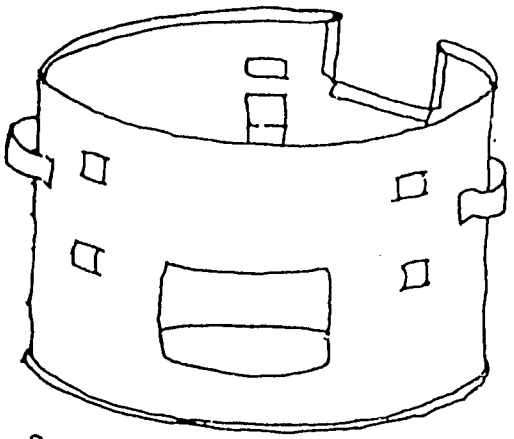

Fig 8.
"Haraf" Stove. Enclosed woodstove. made of metal.

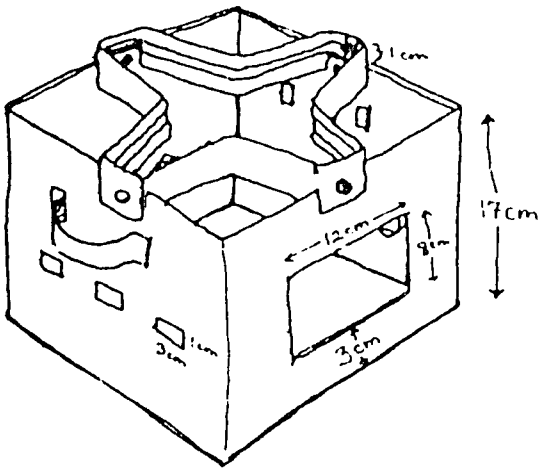

Fig. 9
Metal Woodstove, made from half a biscuit tin or fresh metal.

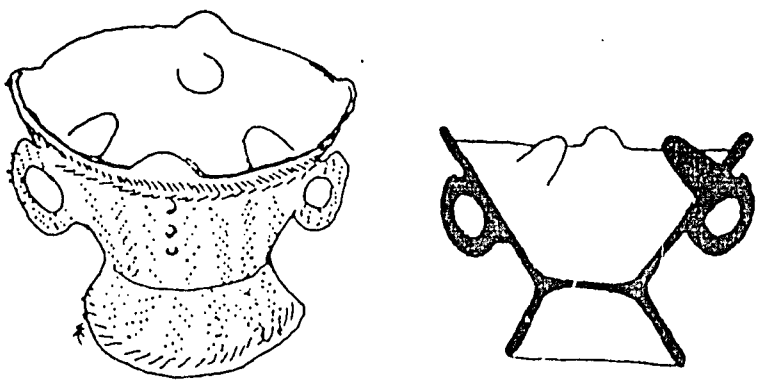

Fig. 10
Traditional NW Somalia Ceramic Stove. It burns wood, and is used mainly for space heating and cooking in small pots. Potters near Boroma put holes up the side of the stove so that it will burn charcoal. Price: 50 to 80/=

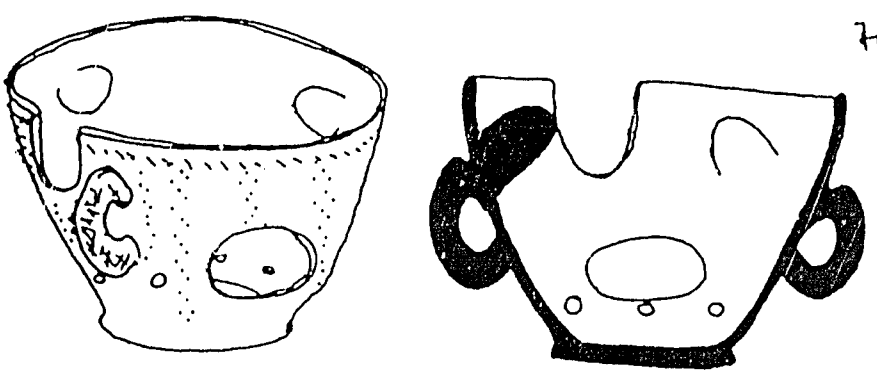

Fig 11
Early VITA Ceramic Stove design. Field tested in Dariman Refugee Camp near Boroma. Stoves lasted one week: a crack would begin near the canjeero pan cutout (which was made too large) and continue through the floor to the door, & eventually break in half.

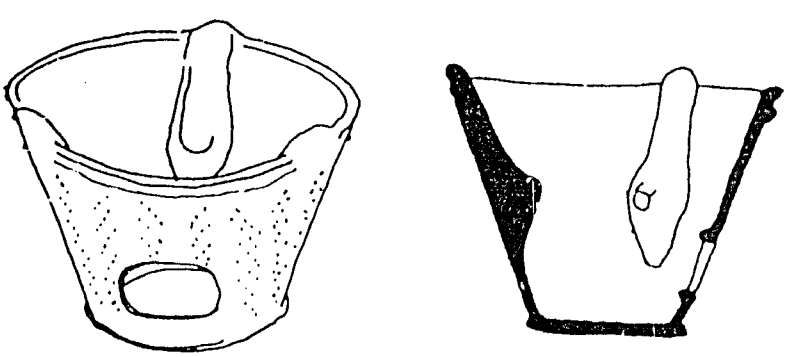

Fig 12.
Newest VITA/Somalia Ceramic Stove design The smaller diameter allows the canjeera pan to sit on top. The door opening is thickened for strength. An extra coil of clay near the rim holds a reinforcing wire, so the stove can be sold "repaired" before it breaks.

Fig. 13

Single-pot mud stove like those built in homes in 5 refugee camps near Hargeisa by Action Aid/Somalia. Stabilised and plastered with cement.

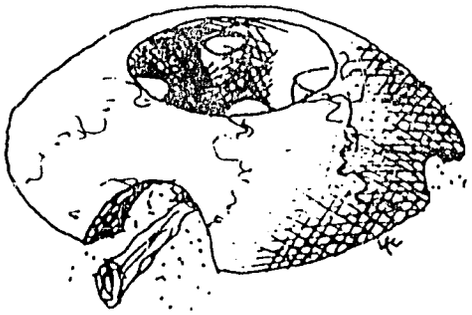

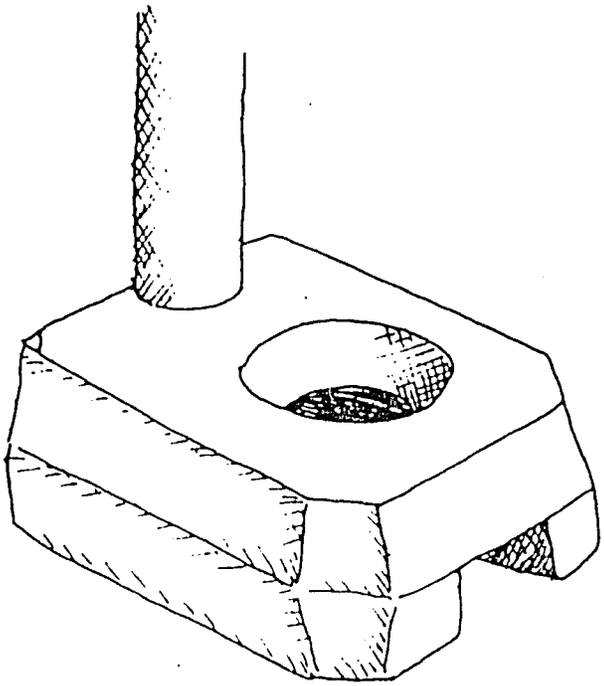

Fig. 14

"Rafiki" Molded Mud Stove.

Developed by UNICEF, some demonstrations were done in villages in NW Somalia but no followup work was done there (1984)

Fig 15

Woodstove made from two one-gallon cooking oil cans. These cans are available in abundance in many refugee camps for only 10/= each.

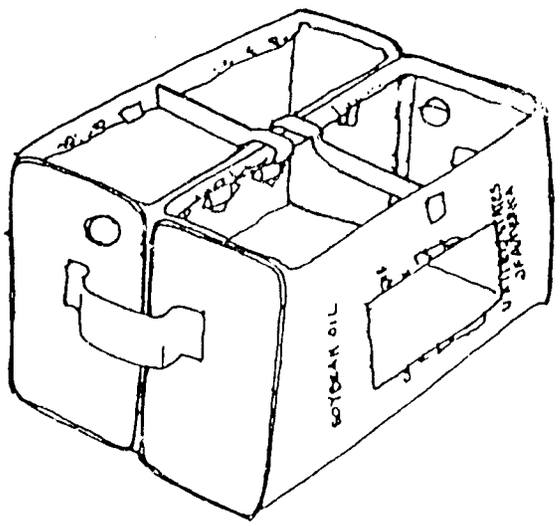

TEMPLATES FOR "HARAF" WOOD STOVE

WALL

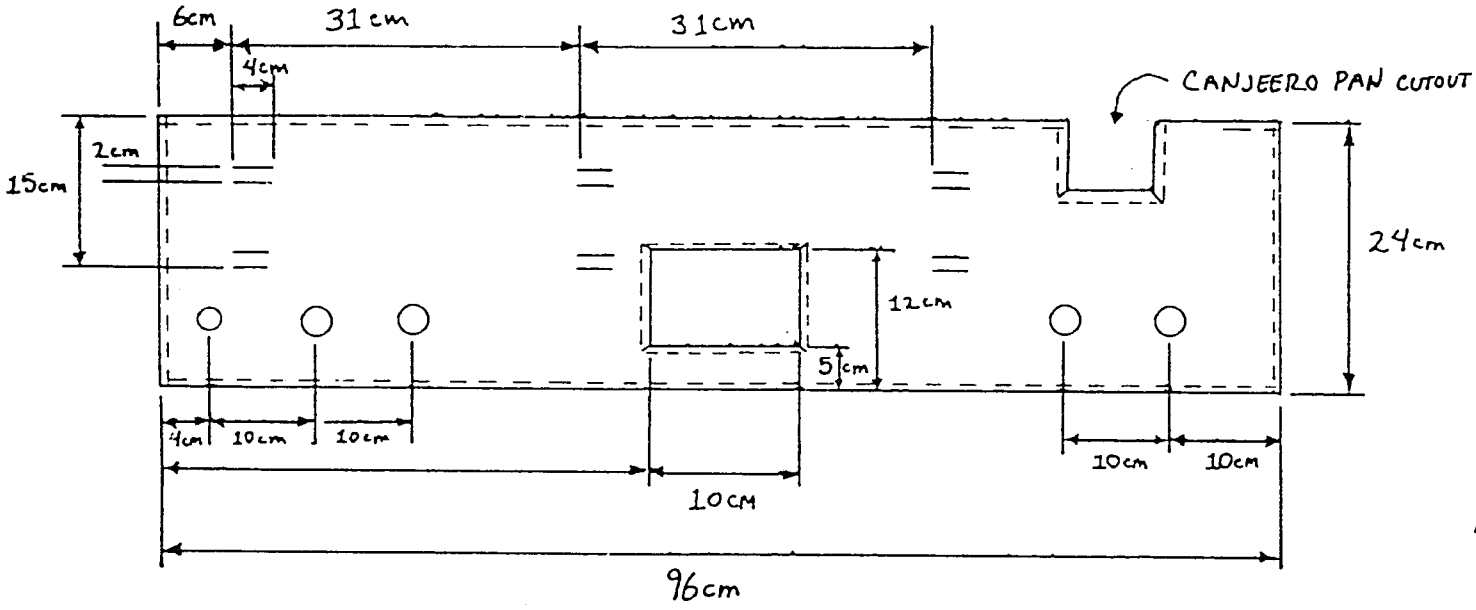

POT REST (x3)

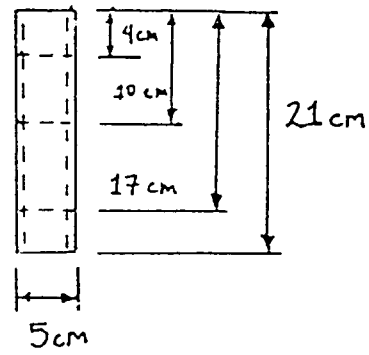

HANDLE (x2)

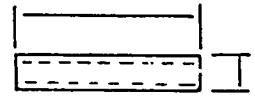

AS INSTALLED

BOTTOM

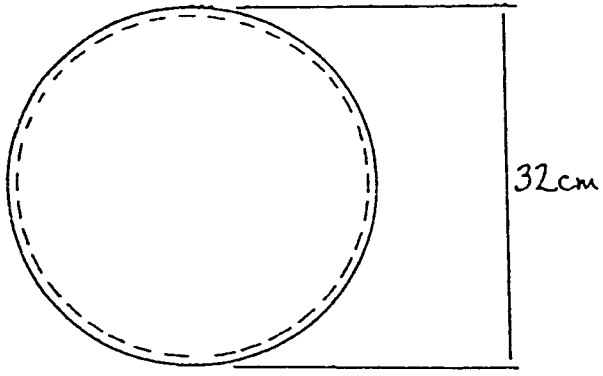

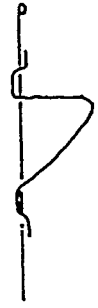

CROSS-SECTION DETAIL OF POT REST

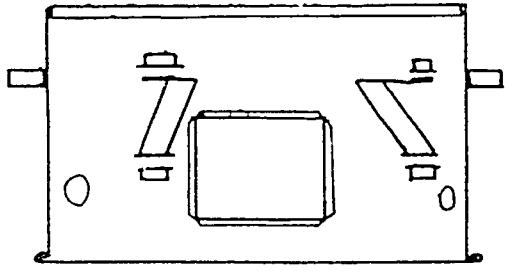

CROSS-SECTION
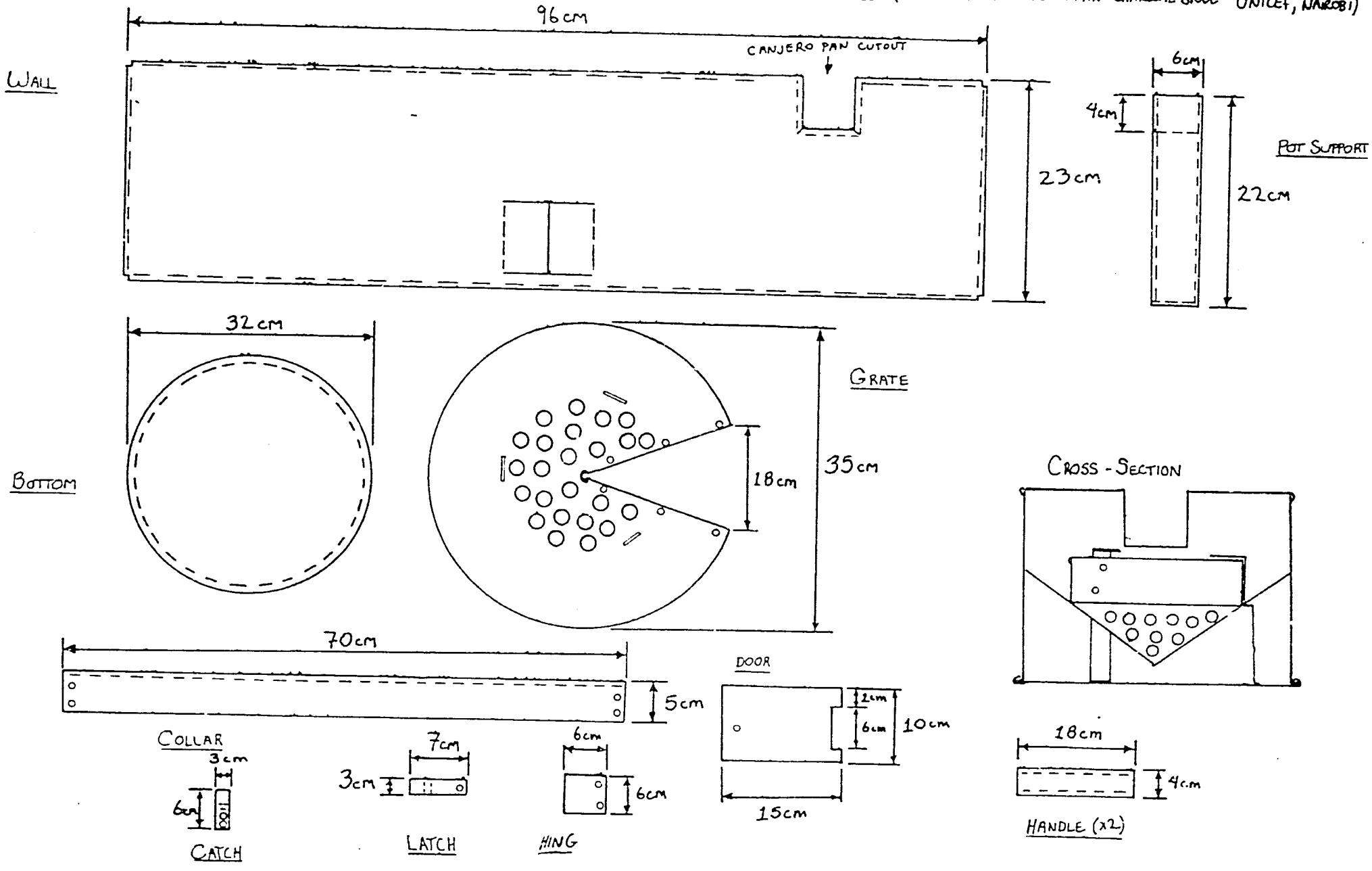
TEMPLATES FOR THE MODIFIED HARAKA STOVE (TAKEN FROM "THE HARAKA CHARCOAL STOVE" UNICEF, NAIROBI)