PN-AAW-105
ISN 47588
93651

The performance of Locally encapsulated module and case study on the cost and efficiency of Solar Electric Powered House.

By:
Audace Ndayezeye, Project Coordinator (Burundi)
Abdulkarim Mousa (Djibouti)
Mohamed H. Nur (Somalia)
Manukaji John (Nigeria)
Omer Osman (Sudan)
Sy Bocar Sada (Senegal)

Training in Alternative Energy Technologies
University of Florida
Session 9, May 1984

TABLE OF CONTENTS

- Acknowledgment ii
- Abstract iii
- Introduction 1

Chapter 1

1.1 Choice of Substrate material for backing the cells 2

1.2 Encapsulation of the module 8

1.3 performance test 12

Chapter 2

2.1 case study of solar electric powered house 18

2.2 cost evaluation of p.v. system application in a typical household 23

- Conclusion 28

Acknowledgement

We express, by this opportunity our sincere gratitude to Mr. Van O. Chesney, Mr. Leonard E. Laketek and the rest of TAET staff for their help and advice. We also extend our gratitude to the U.S.A.I.D. for sponsoring this program.

ABSTRACT

This report aims at the encapsulation of modules using local material and skills. Comparison of the efficiency with the manufactured module is done.

Also a case study on the cost of a solar powered house and cost evaluation of P.V. system application in a typical household is discussed.

Introduction

In remote African Villages, meeting the energy demand is ardous and burden to the economy of individual families. To meet this energy demand the main source is fuelwood, its use as main energy source creates unbalance in the ecological system. There are several ways of harnessing the free energy from the sun, which can substitute this diminishing energy source. One of these methods is photovoltaic system. In fact it is not cheap to harness energy from the sun, using photovoltaic cells, but it is one of the choices for remote areas where fuelwood is getting scarce from day to day and where the conventional energy is not feasible due to the low energy demand and the distance to be covered by the power lines to supply power to a remote village from a grid system. A diesel generator in remote villages has also its own disadvantages, the need to transport fuel and the inconsistency of supply, due to unavailability of diesel which is totally imported. These reasons make photovoltaics the right choice of energy source in the remote areas for small scale applications (up to 5 kW). But the question comes: can we overcome the high capital cost of p.v. systems? Considering the fact that the developing countries have not the technology to manufacture the cells, they cannot at the moment overcome the high cost of the cells, which is the biggest portion of cost of P.V. system installation. In fact in the history of terrestrial P.V. cells, the cost per peak watt has come down from $40-50 in 1974 to $7 at the present. But, even at this price, it is expensive to install a photovoltaic system. However as far as solar energy application is conserned the priority remains for rural areas energy need satisfaction. Not all applications have the same priority; water supply and medicine preservation are nowadays the most common applications. Meanwhile the supply of solar electricity for domestic appliances is considered to be economically not feasible for developing countries.

CHAPTER 1

1.1 Choice of Substrate material for backing the cells.

Most of the p.v. system installations in developing countries are done using manufactured panels which are imported. Based on the assumption that importing the cells could be cheaper than importing the manufactured panels we figured ways to encapsulate the cells using local materials and techniques and compare the efficiency of the locally encapsulated module with the manufacturer's.

Since one of the important parameter for the power output of p.v. cell is its temperature, Fig. 1.1-1, three different materials were tested which can be used as substrate in encapsulating the cells and which are available in our countries. These materials are Phenolic, Formica and normal glass. We encapsulated three single polychristalline silicon cells separately using the three different materials for backing. Temperature data were taken at three different points:

(a) On top of the surface of the cell

(b) In the middle (which is the backside of the cell)

(c) at the bottom (which is the bottom of the backing material)

Since we are interested in the temperature buildup inside the encapsulatation, the temperature varitions at point (b) for the three materials is taken figures 1.1-2, 1.1-3, 1.1-4, 1.1-5.
Taking into consideration the cost, the availability, and the fact that the cell with formica as a substrate material has the lowest temperature variation compared to the others in this experiment, formica was selected to be used as encapsulating material for the module.

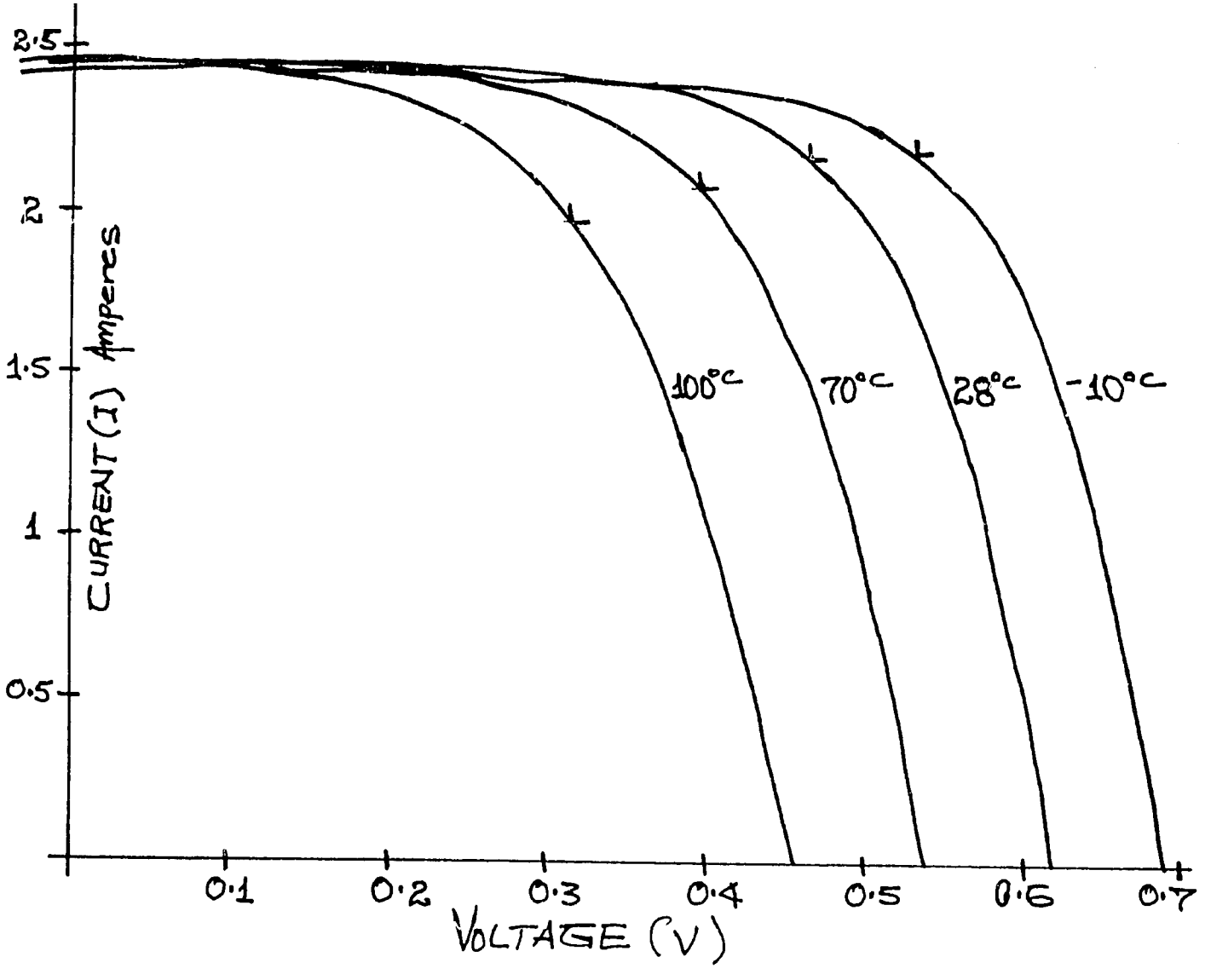

Figure 1.1-1 Curent Voltage characteristics at different temperatures for a typical commercial Terrestrial Silicon Solar Cell of 80.9CM^2 in area at a light intensity of 100 MW/CM^2

MARCH 23-84
AMBIENT TEMP. MAX. 77°F

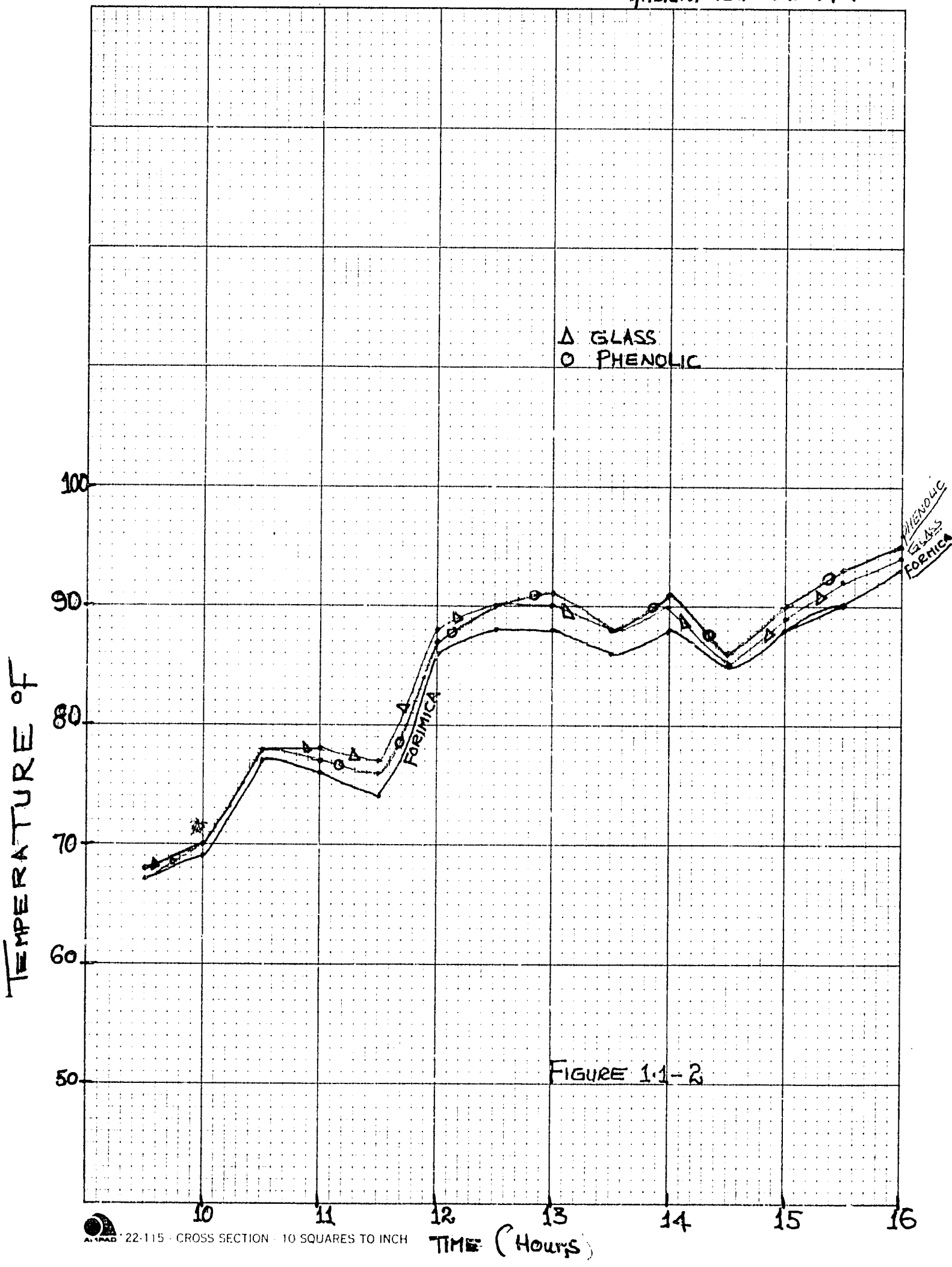

FIGURE 1.1-2

AMPAD 22-115 CROSS SECTION 10 SQUARES TO INCH

MARCH 26 - 84
AMBIENT TEMP. MAY 76°F

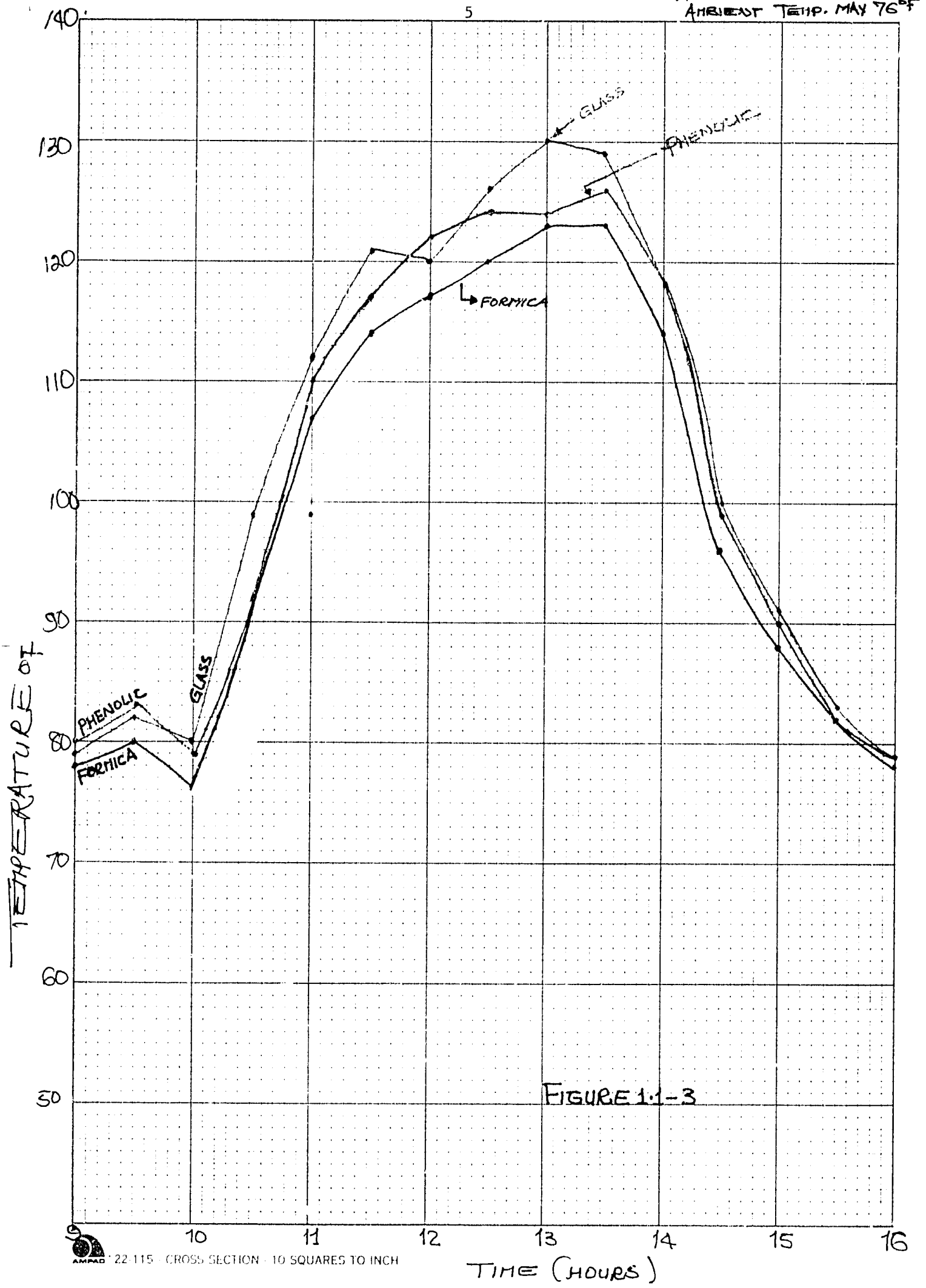

FIGURE 1.1-3

MARCH 2[illegible] - 84
AMBIENT TEMP. MAX 7[illegible]°F

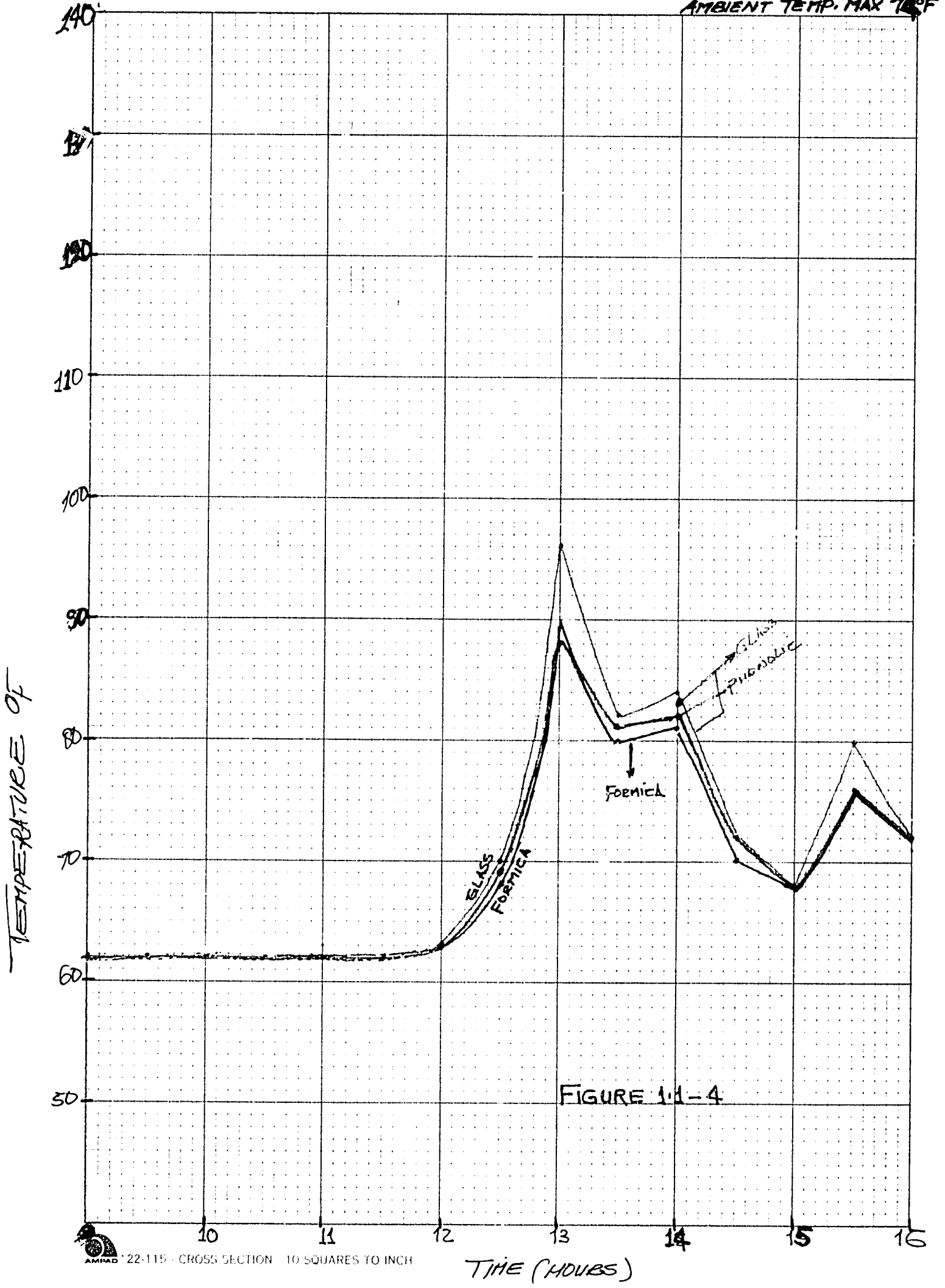

FIGURE 1.1-4

MARCH 30 - 84
AMBIENT TEMP. MAX 68°F

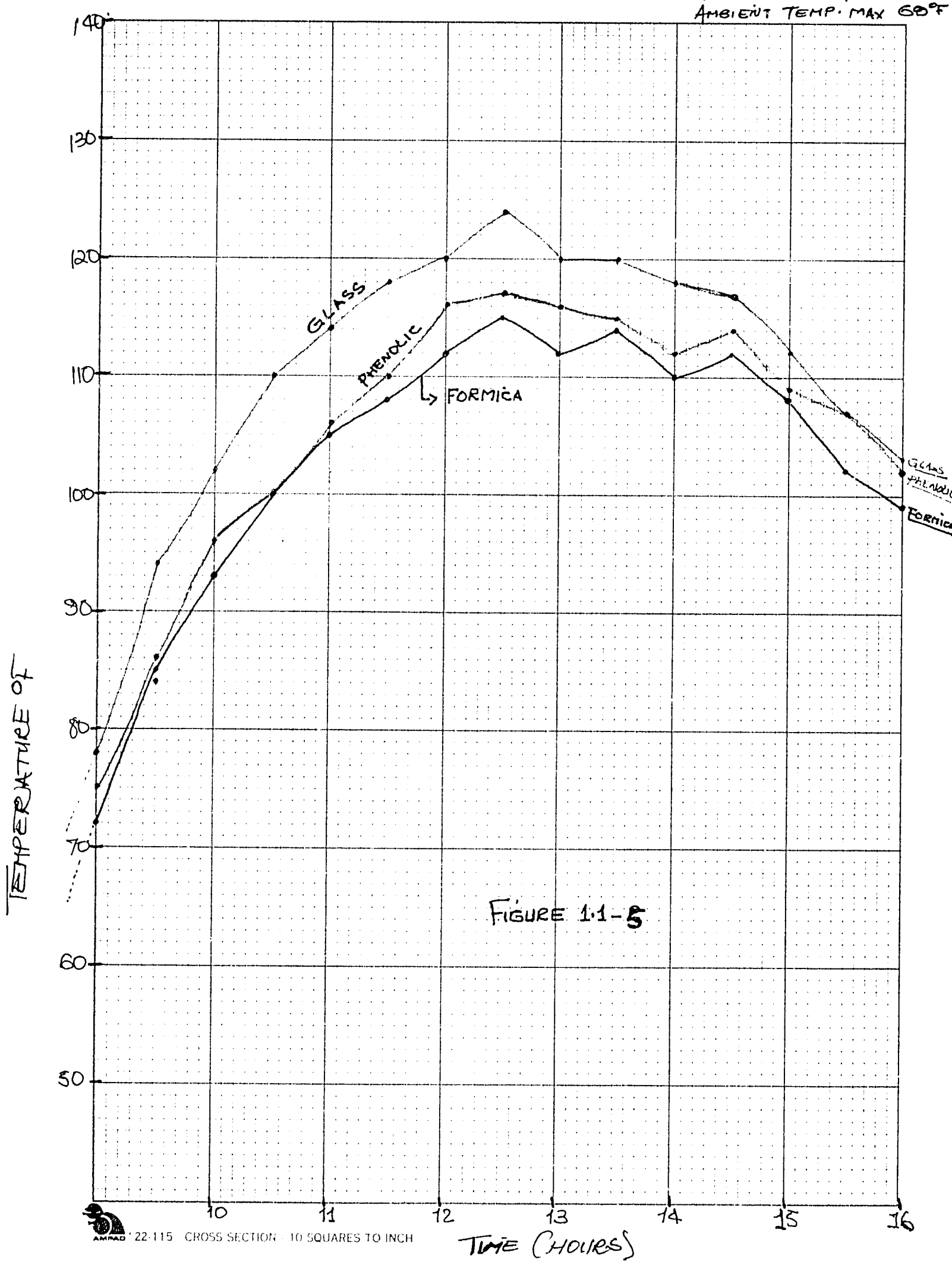

FIGURE 1.1-5

AMPAD 22-115 CROSS SECTION 10 SQUARES TO INCH

1.2 Encapsulation of the Module

Materials and equipments used

a. Polychristalline Silicon Cells

b. Normal glass

c. Formica

d. Soldering equipment

e. Screws and Nuts

f. Glue

g. Circuit Connection Wire

h. Hand Drill

i. Hack Saw

j. Screw Driver

k. Files

l. Punches

m. Aluminium angles

The encapsulation of the module was done in three steps:

A - construction of the frame: Aluminium angles were cut to dimensions and joined together in a rectangular shape as shown in Figure 1.2-1. An 18 1/4" x 22 1/2" normal glass, 1/8" thick was glued into the frame.

b - soldering of the cells

After cutting the formica to the desired dimensions, it was divided into 20 squares each having the same dimensions as the cells (4"x4"). An adequate space was allotted to the frame around the edges and spacing of 2 1/4" was left between the cells to allow contraction and expansion. Two connections were made at the bottom of each cell with 22 Amg Aluminium - copper alloy wire before mounting them on the formica. Then the cells were slightly glued on the formica and connections in series completed. Figure 1.2-2

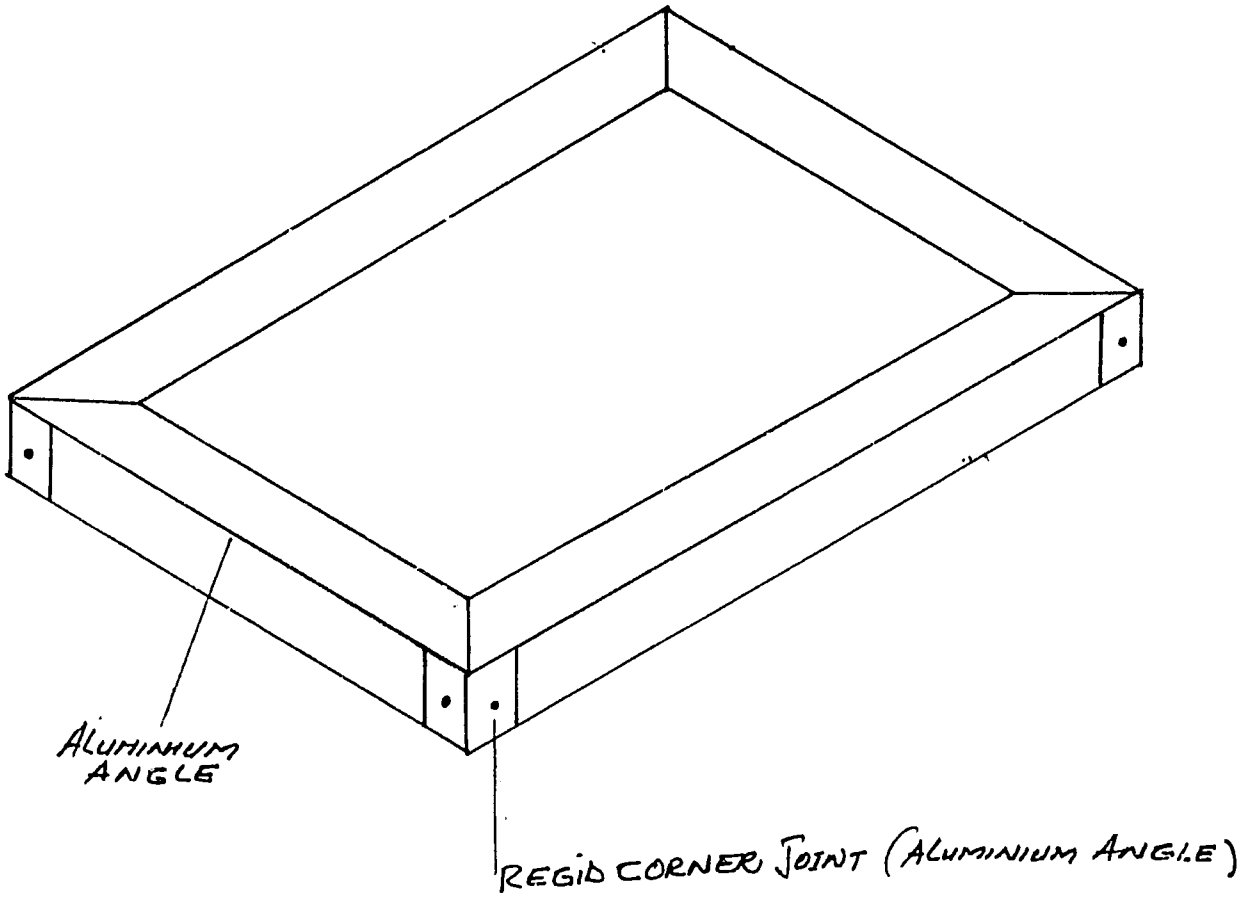

FIGURE 1.2-1

• NOT TO SCALE

c - Incapsulation

After completing the soldering and checking the power generation of the module, the formica with the mounted cells was put in the frame, tightened with screws and nuts into place. In order to prevent contact of the cells with the glass which, may cause breakage, a reasonable gap was maintained. Figure 1.2-3.

figure 1.2 – 2

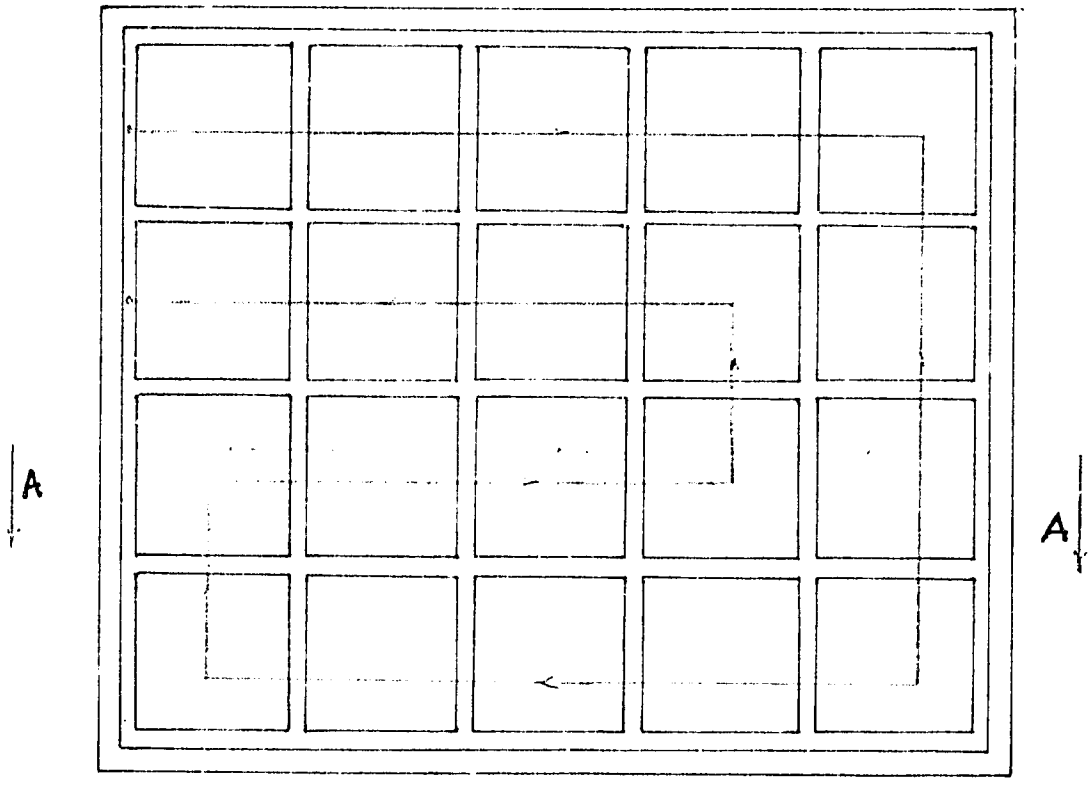

SECTION A.A

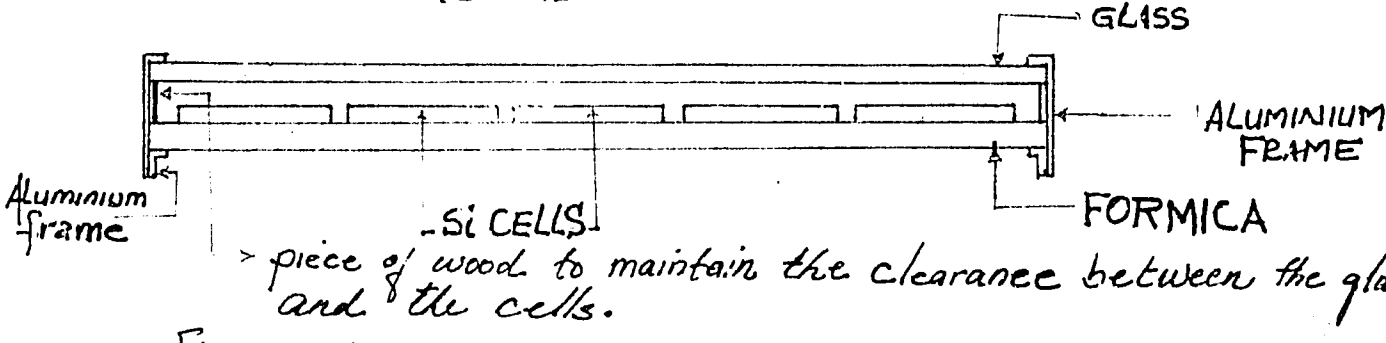

figure 1.2 – 3

• NOT TO SCALE

1.3 Performance test

Instruments used for testing the efficiency and characteristics of the module:

- Ammeter
- Shunt
- Voltmeter
- Variable resistor
- Two pen recording Voltmeter
- pyronometer

Before testing, the module was inelined at 30 facing south corresponding to the EPPLY pyronometer on the roof of the TREEO Solar house.

After connecting the instruments to the output of the module as illustrated in figure 1.3.1, varying loads were applied under a particular solar intensity for both the locally encapsulated module and the manufacturer module. This was to determine the maximum power point and was repeated several times under different solar intensity.

The manufactured module comprises of 40 polycristalline silicon cells connected in series with individual cell's I_{SC} of 2A and V_{OC} of 0.55V at 25°C (standard test conditions given by the manufacturer). Our module comprises of 20 cells of the same type.

As varying loads were applied, current and voltage were recorded and IV characteristic curve plotted as shown in figures 1.3.2 and 1.3.3 for the locally encapsulated module and the manufacturer's one respectively.

As seen from IV curves of the locally encapsulated module, at solar intensity of 979 W/m^2, maximum power occurs at V= 6.15 and I= 1.57A and under various solar intensity, it is indicated that the voltage at maximum power remains slightly greater than 6V.

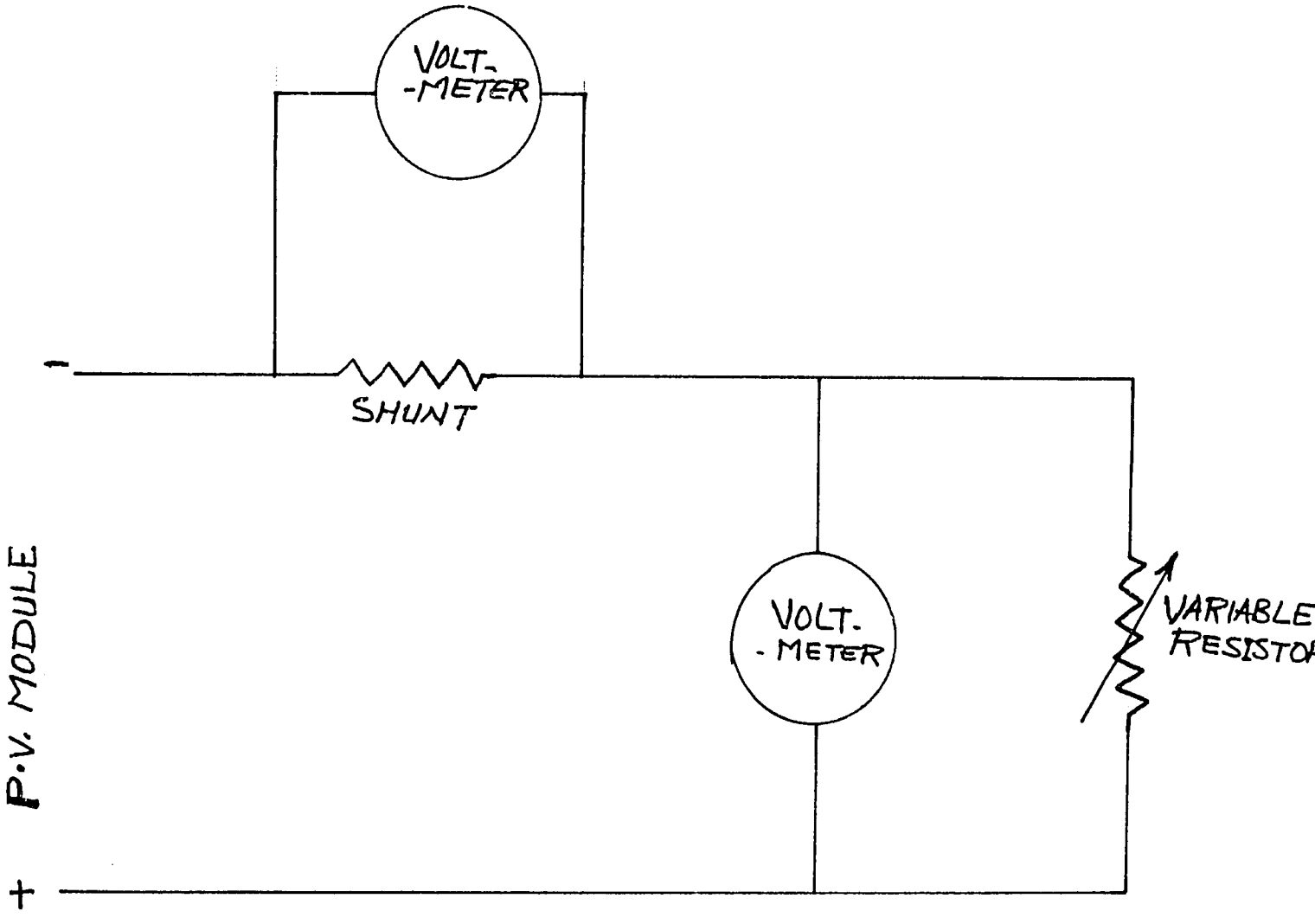

FIG. 1-3-1

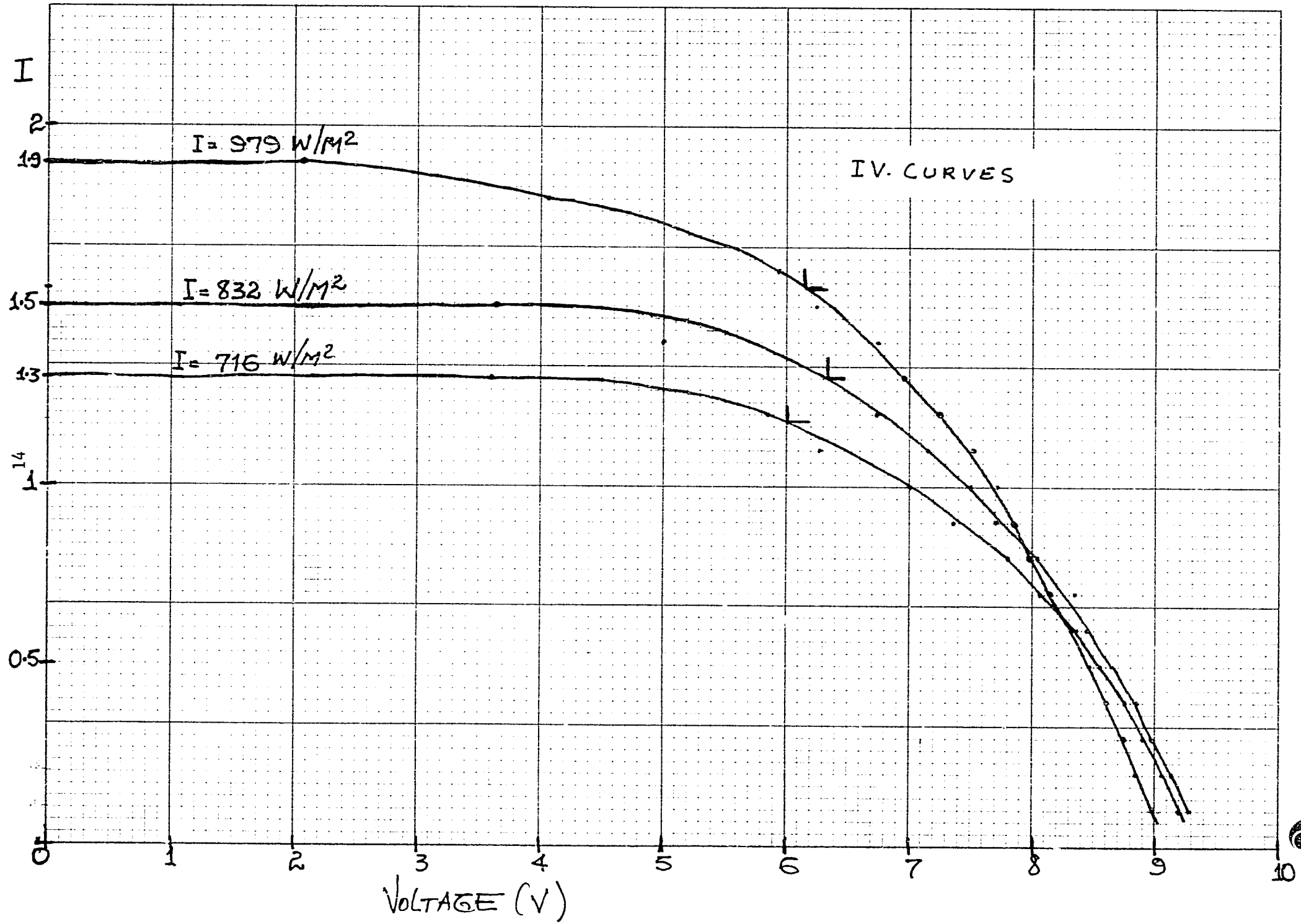

FIG. 1-3.2.

AMPAD 22-115 CROSS SECTION 10 SQUARES TO INCH

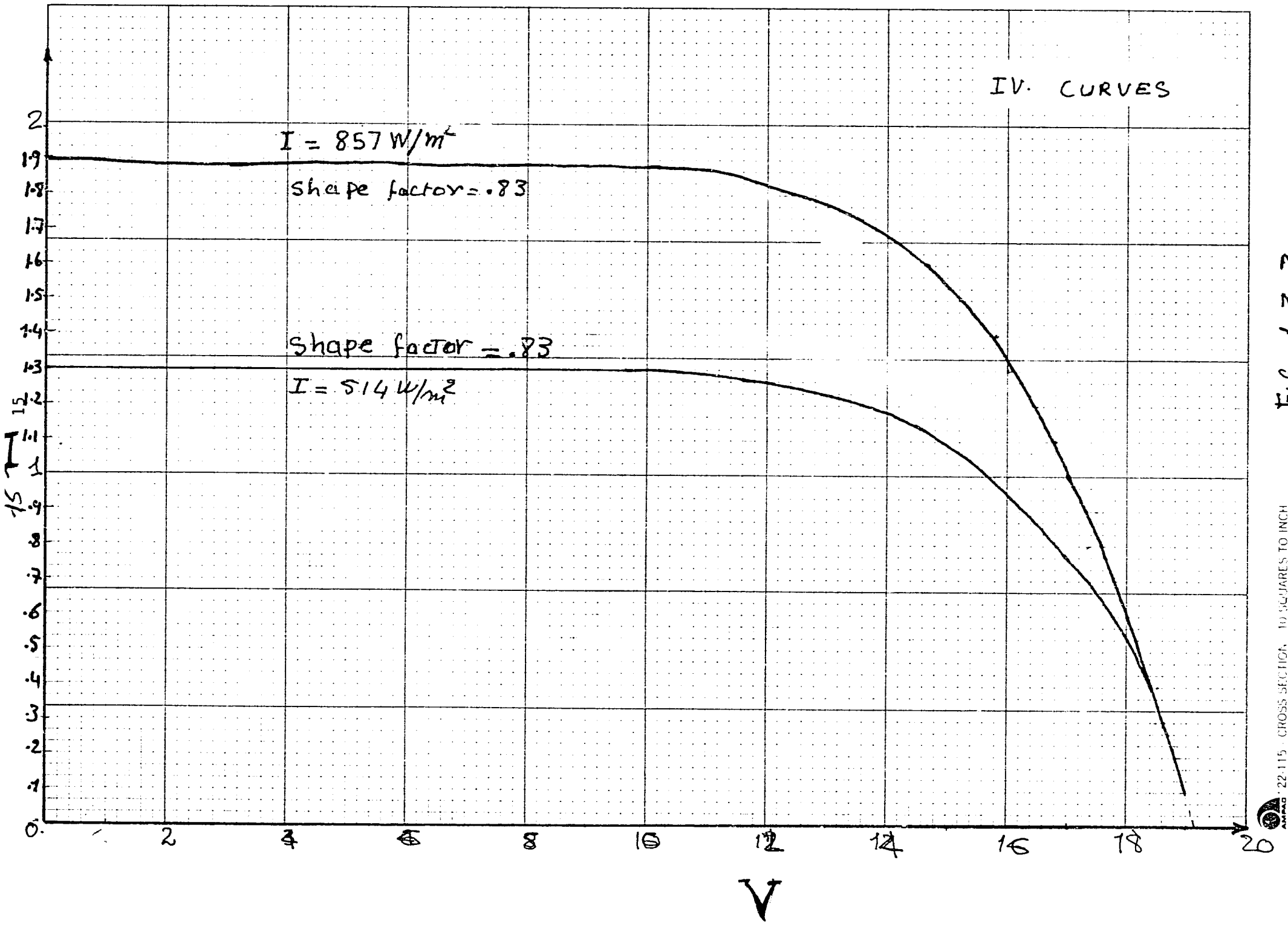

FIG. 1.3-3

AMPAD 22-115 CROSS SECTION 10 SQUARES TO INCH

From the same figure, for solar radiation intensity of 979 W/m^2, the efficiency of the module can be calculated as follows.

Maximum power output = $I_m \times V_m$ = 1.57A x 6.15V = 9.15W

$$\text{efficiency of the module} = \frac{Im \times Vm}{i \times a} \times 100$$

$$= \frac{1.57A \times 6.15V}{979W/m_2 \times 0.2m^2} \times 100 = 5\%$$

Im = current at maximum power point

Vm = voltage at maximum power point

i = solar intensity (W/m^2)

a = effective area of the module

The average shape factor is about .82

For the manufactured module, it is seen from figure 1.3.3 that at a solar intensity of 832 W/m^2, maximum power occures at I = 1.7A and 12V. Maximum power output = Im x Vm = 1.7A x 12V = 20.6W

$$\text{efficiency} = \frac{Im \times Vm}{i \times a} \times 100$$

$$= \frac{1.7A \times 12V}{832\ W/m^2 \times 0.4m^2} \times 100 = 6\%$$

Average shape factor = .83

By setting the variable resistor at approximately the voltage at maximum power point of the two modules the variation of the current was recorded from sunrise to sunset, using a two pen voltmeter recorder.

Figure 1.3-6 illustrates the proportional increase and decrease of the current with the magnitude of solar intensity.

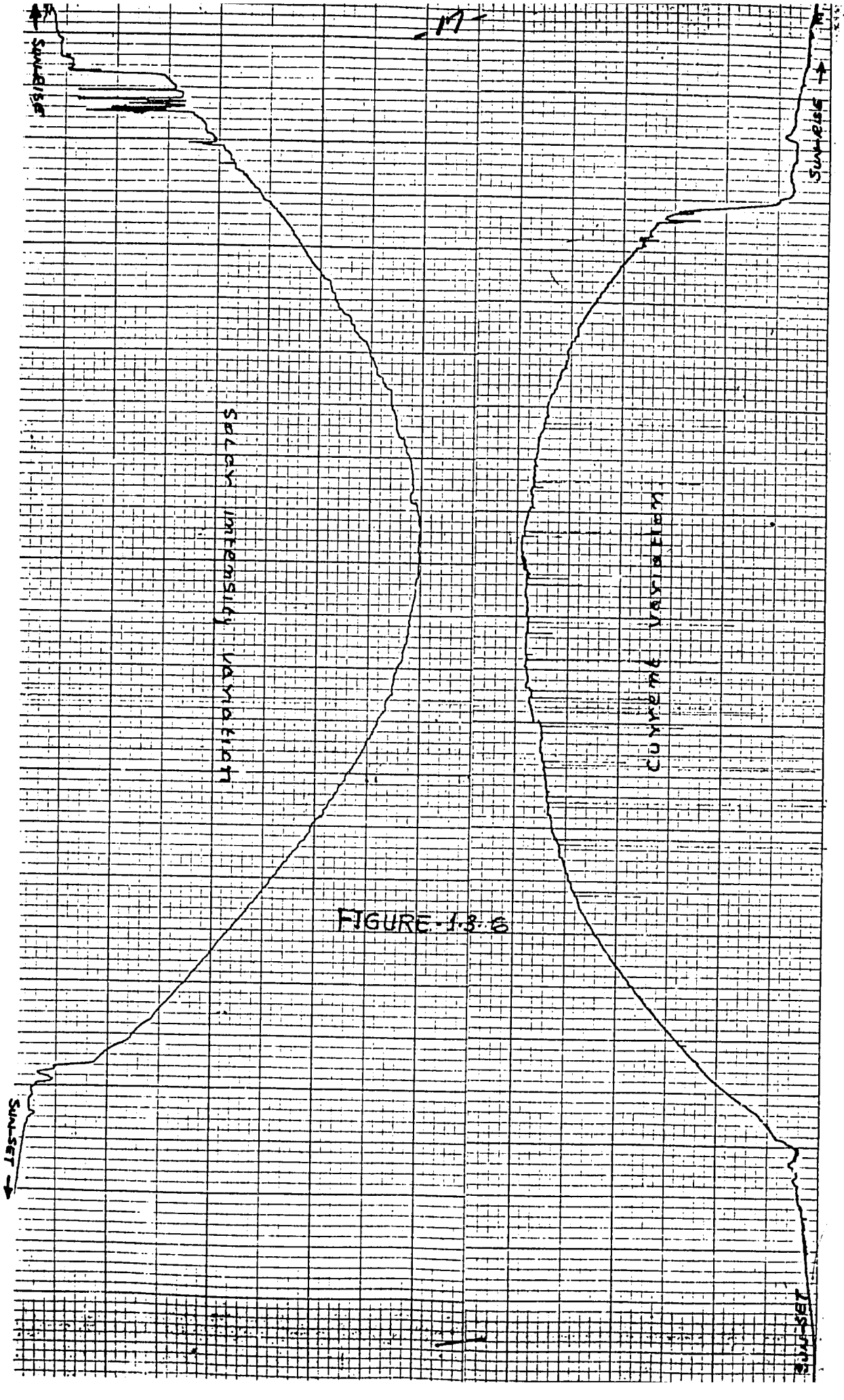
SUN-RISE
SUN-RISE
SUN-SET
SUN-SET
Solar intensity variation
Current variation

FIGURE-1.3.6

ECONOMIC EVALUATION OF A SOLAR POWERED HOUSE IN RURAL AREA USING P.V. SYSTEM

As part of the photovoltaic group's project, this section is intended to the following objectives:

- derive a possible P.V. system configuration to provide electricity to house by refering to the existing solar house in the TREEO Center facility
- from this configuration carry out the sizing of the PV system for a house occupied by 10 persons
- request equipment cost information form manufacturers and evaluate the cost of the project

I SYSTEM DEFINITION

I.1 DIFFERENT EXISTING PV SYSTEM CONFIGURATION

Fordomestic appliances, the use of storage batteries is necessary.

This reduces the possible arrangements to two:

1. DC supply system fig. 1-a
2. AC supply system fig. 1-b

A major difference exists in these two systems: The second one uses an inverter to obtain conventional AC supply current.

For the first system any equipment used in the house will be operated with DC current. In this case we save money by avoiding buying an inverter. There is also less losses in the conversion process without the inverter.

But in the other hand the availability of DC operated equipment is less than AC conponents. Some P.V. manufactures have developed DC operating equipment (Fluorescent Lamps, Bulbs, T.V., Refreigerators ETC--). But the market is very limited and that makes their prices high compared to AC components.

DC SUPPLY SYSTEM

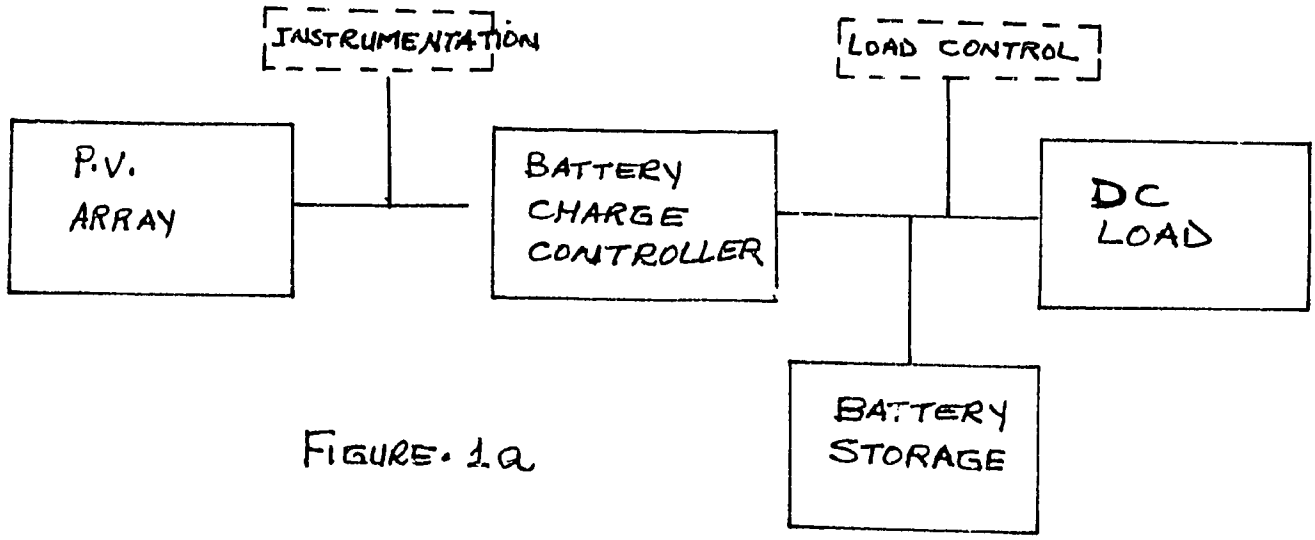

FIGURE. 1a

AC SUPPLY SYSTEM

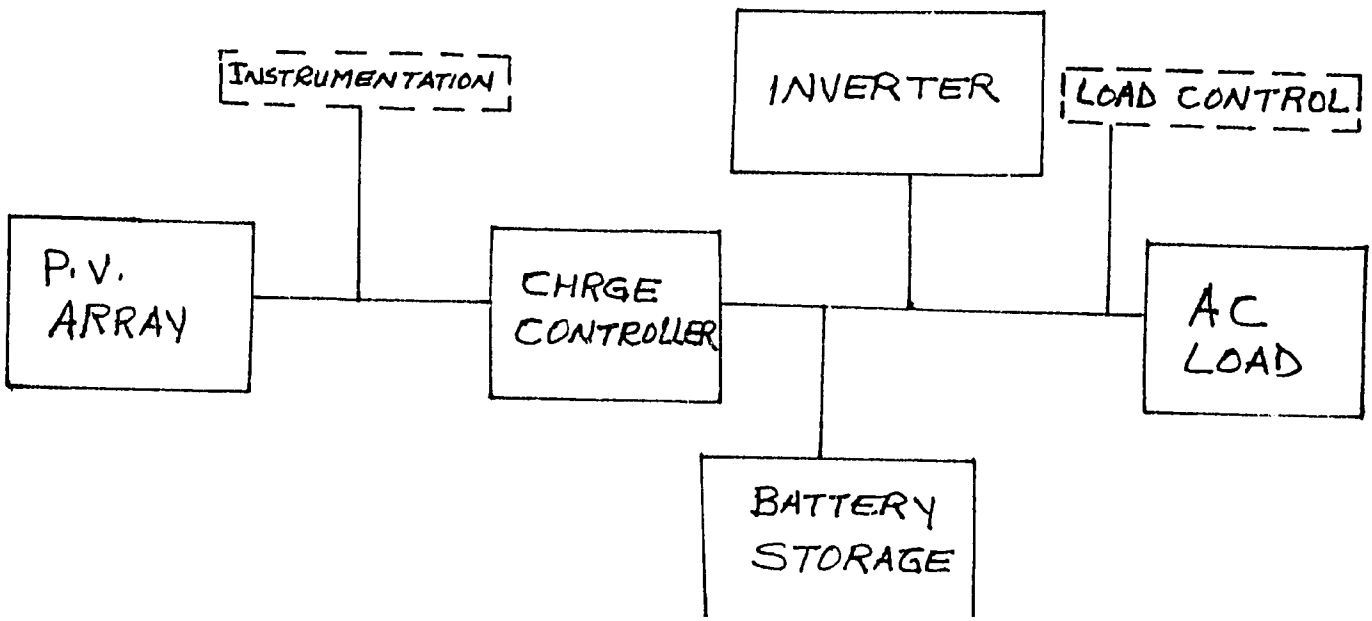

FIGURE: 1b

In this study, our interest is on the second option in which an invertor is used. Before getting into the design of the selected system, we first had a look at an existing system in the TREEO [Training and Research in Education and Enviromental Occupation] Center, which delivers DC current.

I.2. DESCRIPTION OF THE TREEO CENTER P.V. POWERED HOUSE FACILITY (FIG. 2)

This system is installed for both testing and training purposes. It comprises of the following components:

P.V. ARRAY

10 Modules of 36W each

BATTERY CHARGE CONTROLLER

SIX BATTERIES 12.5 V

INSTRUMENTATION

2 watt-hour meter

2 voltmeters

2 amperemeters

LOAD EQUIPMENT

12V DC Refrigerator - 6 Amps

6 Bulbs 50 W each

1.3 MEASUREMENTS DONE ON THE SYSTEM.

We have recorded data from the system for 3 days. The refrigerator was the only load.

Total incident energy on the pannels = 72 kWhrs

Total energy produced by the pannels = 4.34 kWhrs

Total energy consumed by the load = 5.34 kWhrs

On this basis the efficency of the array is 6.00% and the difference between the load consumption and the PV array has been furnished by the batteries. There is a shading effect of the trees on the pannels in the morning and the evening. (Fig. 3).

A correction is to be made for the shade effect.

CIRCUIT DIAGRAM OF TREEO CENTER P.V. SYSTEM.

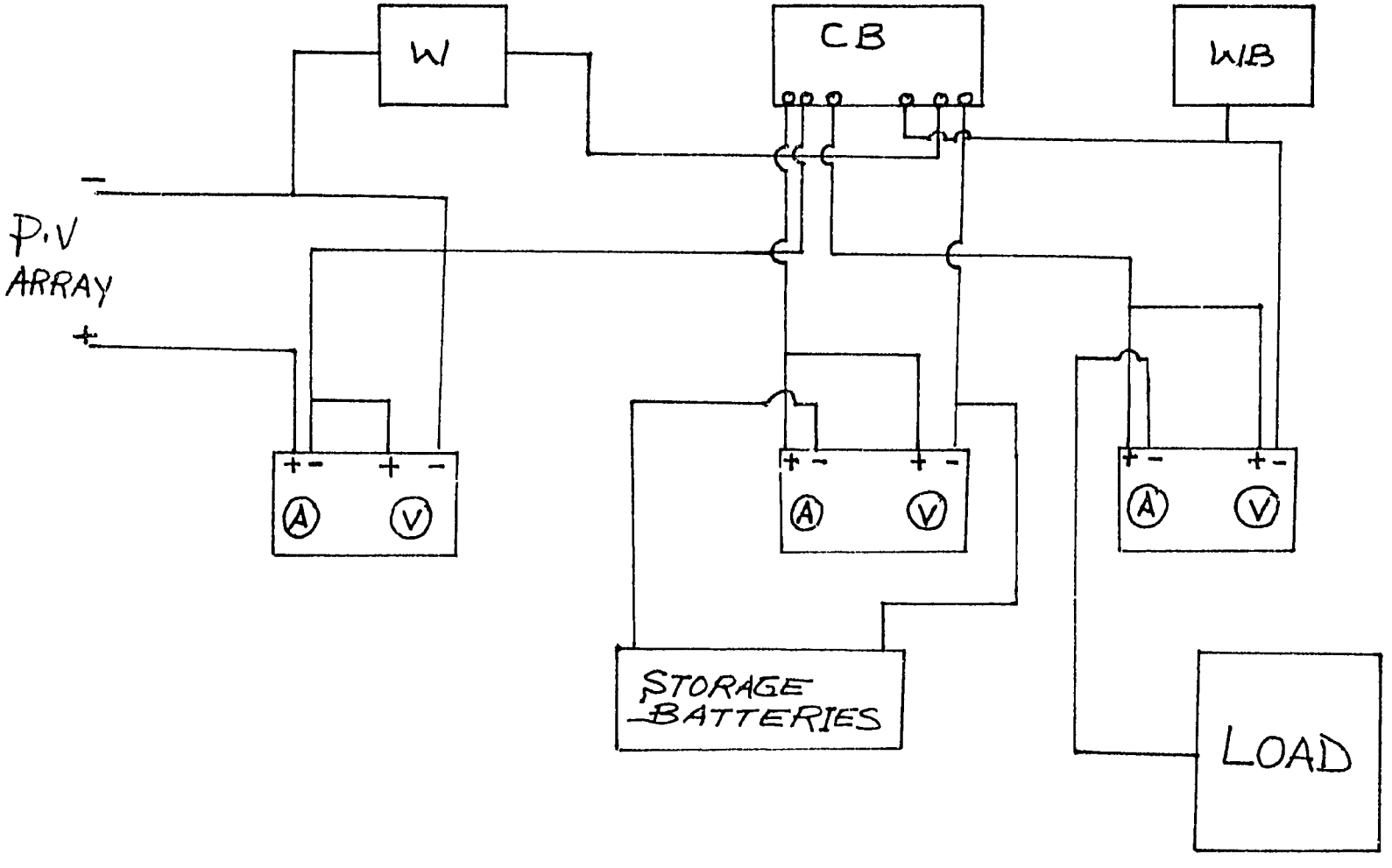

W ≡ WATTHOUR METER

A ≡ AMPERE METER

V ≡ VOLTMETER

CB ≡ CHARGE CONTROLLER

FIG. 2

TREEO CENTER P.V. SYSTEM LOCATION

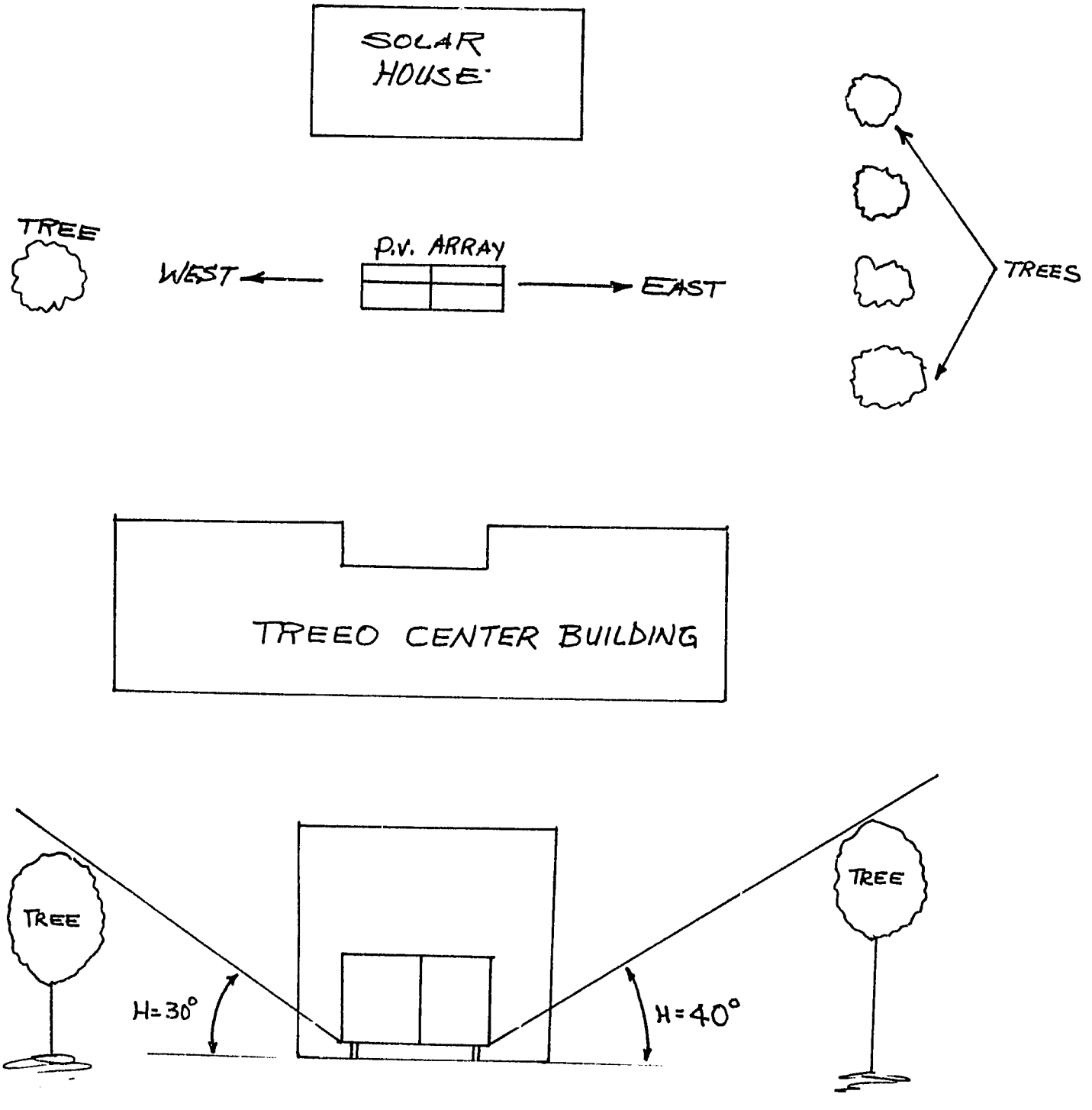

FIGURE 3

MORNING SHADING EFFECT

If H is the elevation angle of the sun above the horizontal, the pannel is completly shaded during all the time when H is less than 40° This represents 2 hours 40 minutes. This shading is caused by trees east of the pannels.

AFTERNOON SHADING EFFECT

This shading is due to trees at west of the pannels. If H is the elevation of sun as measured from west, the pannels are totally shaded when H is less than 30° - this is 2 Hours before sunset.

By taking into consideration these two effects we come out with an efficiency of 7% for the PV array.

II COST OF THE SYSTEM

PV array 10 modules	$4370
Batteries	540
Charge controller	220
Watt-hour meter	800
Total cost of system	$5930
Refrigerator	650
Total cost	$6560

III SIZING OF THE SOLAR HOUSE

Let us assume the house is occupied by 10 persons

ENERGY NEED CALCULATION

Water supply for the house (existing well of 35m TSH)

Total water demand 1.05 m^3/day number of hours of pumping 2hrs/day 525 L/hr. Power input for the pump 102 W - considering an efficiency of 50%.

LOAD EVALUATION

APPLIANCES	EQUIPMENT	NUMBER ITEMS	DAILY TIME OPERATION HOURS	RATED POWER PER ITEM
Water supply	Centrifugal pump	1	2	102
Lighting	Fluorescent Bulbs	10	5	60
Refrigerator	AC driven comp.	1	24	300
Ventillation	Fans	6	10	100
T.V.(or Radio)	Audio	7	5	250

Total Power = 1852 W

Total daily energy consumption = 9954WH.

In this calculation we consider simultaneous factor of 1.0. Which is the worst case.

P.V. ARRAY SIZING

We assume a site with the following data:

- Minimum total insolation expected 5.0 kWH/M^2 day
- Maximum total insolation expected 6.5 kWh/M^2 day

A minimum of 5 hours a day during which the total insolation is equal or greater than 800W/m^2. We assume a P.V. module delivering 40W for 800/w^2 of total insolation. (The M50 type from ARCO Solar gives 43 peakwatt for 1000 W/M^2 at 35°C).

The total daily consumption = 10KWh number of modules: 50 (43W_p each at 1000 W/w^2)

STORAGE BATTERY SIZING

Item	current drain		Ampere hours/day
	A		AH
Pump	0.5		1.0
Lighting	3.0		15.0
Refrigerator	7.4		33.0
Fans	3.0		30.0
T.V or other Audio	7.15		6.0
		Total AH	85.0 Ah/day

We make a safety factor for 3 days operation on storage batteries, so the total system autonomy is 250 AH.

On the basis of these considerations, we have obtained the following configuration price list from manufacturers:

COMPONENTS		Prices $
50 Modules 43 Wp 17.3^{V}		21650.00
40 General 250 AH 6 Volt batteries		3500.00
7 support structures		708.75
1 metered control housing		2562.00
100 module interconnectors		300.00
80 battery cables		480.00
1.5 KW heart inverter		2750.00
2 inverter cables		78.00
	Total system cost	32026.75
1 Pump (105 W)		150.00
1 Refrigerator (200L capacity)		400.00
5 Fans		250.00
10 Fluorescent bulbs		20.00
	Total cost	33046.75

Appliance components cost is 3% of total system cost.

The same load component operated in DC would cost

DC Pump	$ 200
DC Refrigeration	1500
DC T.V	400
DC Fans	375
DC Fluorescent bulbs	50
	$2525

The total DC project would be $31723 and the load cost is 8% of total system cost.

The AC system is $300 more expensive. In fact the cost of the inverter is nearly balanced by the high cost of DC equipments. If we consider the replacement of components, as it was mentioned earlier AC components are more available.

According to these results as far as domestic appliance of P.V. system is concerned it is worthwhile to run a pilot project on AC systems. Such a pilot project will provide answers on the following points:

- Manitenance problems
- Array size versus storage battery capacity
- Detailed economical and social impact.

In most developing countries many governmental projects are located in rural areas, and in many cases the residential housings of project personnel are installed in the nearest city where electricity is available. With P.V. system, this electricity can be provided at the project site. In other words providing electricity can in this case incite people to join projects in rural areas.

For running a pilot project, we suggest the installation of a diesel generator in stand-by to supply electricity in case of technical difficulties on the P.V. system. It will also be a way of running comparisons.

SUGGESTED PILOT PROJECT CONFIGRUATION (see Fig. 4).

PILOT PROJECT CONFIGURATION

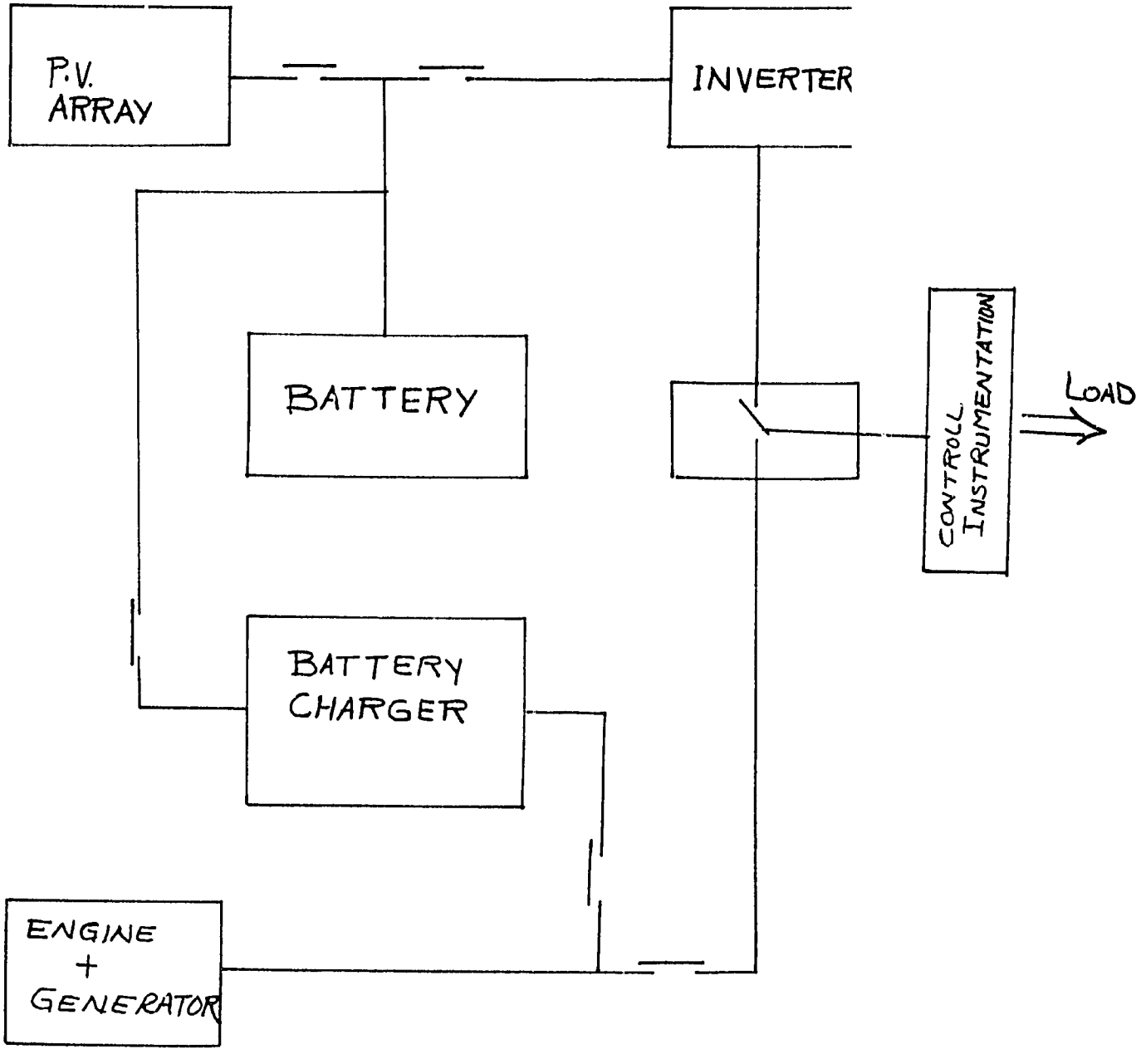

FIGURE. 4

Conclusion

In the performance analysis, it is indicated that we have almost the same shape factor in both the locally encapsulated module and the manufactured module. The shape factor is a measure of the series resistance of the system and the disparity of individual ~~at~~ cell characteristics. Therefore, the closer the shape factor gets to 1, the smaller the internal resistance in the whole module, the better it is. Since we used ordinary available wire for connecting the cells with ordinary soldering equipment, we can conclude that the wire used as well as our soldering operation was as good as the soldering operation done by the manufacture of solar panels. It should be noted that in the locally encapsulated module, no membrane and treated glass were used. Therefore the effect of weather on the locally encapsulated module can be detected after a long period of testing.

Based on the case study of the pilot project in this report, government of most developing countries can undertake this project to improve the standard of living of their rural populations.