PN-AAA-099
ISN 47571

AN INVESTIGATION OF REFRIGERATION AND AIR-CONDITIONING ABSORPTION SYSTEM REQUIRING LOW HEAT SOURCE

by

Lamin Jobe, The Gambia
Bocar Sy, Senegal
Abdul Karim Moussa, Djibouti
John Manukaji, Nigeria
Odunukwe Chukwubueze, Nigeria

Training in Alternative Energy Technologies
University of Florida
Gainesville, Florida
Session 9

ACKNOWLEDGEMENT

We wish to express our sincere gratitude to the United States Agency for International Development for enabling us to participate in the programme of Training in Alternative Energy Technologies, Session 9.

Our thanks also to Dr. Erich A. Farber, Dr. Martin Bush, Dr. Roberto Pagano, and all the members of the T.A.E.T. program.

TABLE OF CONTENTS

Acknowledgement	i
Introduction	1
Project Objectives	3
Needs and Possible Applications for Absorption System	4
Methodology -- Analysis and Design of Absorption System	6
Heat Source Design for the Generator of the Ammonia Water Refrigeration Unit	13
Theoretical Review of Flat Plate Collector Design	17
Calculation of the Overall Loss Coefficient	18
Description of the System Used in This Project	21
Conclusion	24
References	25

INTRODUCTION

Alternative energy sources are considered compatible with absorption systems requiring low energy grade. Since the more directly utilized the energy is, the better, the use of flat plate solar collectors is considered ideal in this case.

A system for effecting space cooling as well as refrigeration can find wide application in hot tropical conditions especially if it is operated by a non-conventional energy source. If feasible within the economic and technical context of a developing country, it can be of considerable advantage considering the high toll on foreign exchange of fossil fuels which are normally used by conventional systems. For the absorption system in particular, additional advantages also lie in the fact that it has low maintenance requirement and that it is structurally sturdy.

Absorption system technology already has had wide application in industry in the developed countries and it is well established. This is especially true of the ammonia-water system. In addition, absorption systems have been used in household refrigeration and in air-conditioning and the technology is quite common.

In the developing countries, use of absorption systems is generally limited or absent. Several factors can be cited for this situation apart from the usual economic conditions which deprive the use of many forms of existing technology. The lack of the required research and development intrastructure notwithstanding. There is also general lack of know-how or incentive to carry through the complex process of investigating a piece of technology researching its development

and finally effecting its production for the use of society. The many ramifications of such a problem is beyond the scope of this project; however, it is suffice to say that the need for addressing this issue is realized by many governments of developing countries and international aiding agencies. Training is therefore given priority especially in the fields of Appropriate Technology and Alternative Energies and their possible applications in the development process. It is in this context that this project is pertinent.

PROJECT OBJECTIVES

The following were a tentative set of project objectives:

(i) investigate the need and possible application of an absorption system for cooling and refrigeration in developing countries;

(ii) assess the technical feasibility of adapting this technology given an alternative energy resource base;

(iii) learn the method of analysis and design of absorption systems;

(iv) gain practical experience with an existing ¼ ton, 3000 Btu system designed for research of refrigerant-absorbent pairs, exchanger effectiveness, optimum system configuration and operating temperatures;

(v) present a report covering all relevant experiences and information on the above.

NEEDS AND POSSIBLE APPLICATIONS FOR ABSORPTION SYSTEM

The need for cooling and refrigeration under hot tropical conditions exists without saying in almost all developing countries subjected to high temperature and levels of irradiance. In fact, it is the availability of rainwater which usually delineates the seasons rather than temperature, which is the case in temperate regions of the world. High temperatures, coupled with high humidity levels, generally have a negative impact on human comfort as well as productivity and therefore space cooling can have a ready application not only in households, but hotels, factories, offices, etc. For instance in the case of the Republic of Djibouti, summer temperatures can reach 43°C (110°F) and accompanied by 90% relative humidity. Some of the soils in the region are quite salty and this can increase soil temperatures considerably as well.

It is well known that human productivity is dependent on a level of comfort which in turn depends on certain levels of temperature and humidity. It is quite conceivable therefore that providing space cooling will increase productivity to a level where it will off-set the cost of providing a cooling system and become a net gain.

Education in many developing countries will be better enhanced if institutions of learning could be built to accommodate better environment for students. This is not trivial since considerable amount of human potential can be wasted by neglecting the conditions required for the proper education of a country's citizens. This is especially true of developing countries.

In the field of public health, space cooling can have ready application in hospitals where a controlled environment can be crucial for the

recovery of patients. There are many hospitals in developing countries which are not only hot and humid but also swarmed with flies. It is not so hard to believe that disease will be better managed in these places if the environment was better controlled.

The potential to produce and consume perishable products is greatly constrained by general lack of refrigeration in developing countries. In fact, the housewife in most developing countries finds it necessary to visit the market each day for her supply of items which cannot be kept more than a day under ambient conditions. Lack of refrigeration generally results in the loss of a large percentage of perishable products such as meat, fish, vegetables, especially where canning is not practiced. In The Gambia it is estimated that at least 30% of the fish caught daily gets rotten before it reaches the consumer. Fishermen usually resort to drying the fish and selling them at a much reduced price.

Apart from its application in households and marketing enterprise of perishable items, refrigeration can also have considerable impact on the preservation of medicine in remote hospitals where the use of conventional systems is impractical.

The particular use of absorption systems in the applications cited above could be made possible with the use of alternative energy source. It is considered that solar flat plate collectors are well suited to this technology since only low grade heat is required. The rise in cost of conventional fuels has been a constraint on the use of conventional systems for the developing countries envisaged. Solar energy is a readily available form of energy and its importance as a source of energy increases for remote areas where electricity or other conventional forms of energy is generally unavailable.

METHODOLOGY -- ANALYSIS AND DESIGN OF ABSORPTION SYSTEM

System Description

The basic difference between a compression cooling cycle and an absorption cooling cycle is that the former is driven by the use of a pump on a refrigerant while the latter utilizes heat and a refrigerant-absorbent pair with minimum pump work. This configuration achieves the basic goal of cooling by absorbing heat from a low heat sink and rejecting it in a higher heat sink, consequently energy must be provided according to the dictates of the second law of thermodynamics.

In absorption cycles, the primary fluid or refrigerant is absorbed by a secondary fluid or absorbent which it has a special affinity for. This is accomplished in the absorber (Fig. 1) and the heat released during this process is rejected from the system; the refrigerant-absorbent pair from here is pumped to a higher pressure passing through the reflux condenser and through another heat exchanger or intercooler where heat is gained before entering the generator. At the generator, the heat provided fractionally distills the refrigerant and at the reflux condenser any traces of the absorbent is removed, e.g., in ammonia-water system so that vaporization will not be reduced by the presence of the absorbent in the evaporator. In water-lithium bromide pair, enough water must be present at all times to dissolve the lithium bromide and so avoid solidification of the latter.

At the condenser (Fig. 1) the 100% pure superheated refrigerant is cooled until it condenses. The condensed refrigerant is then throttled through a thermostatic expansion valve. This expands the liquid to a lower pressure as well as regulate the amount of liquid passing through.

Assumptions: Q_e - 300 Btu

T_3 = 86°F

T_4 = 50°F

T_6 = 86°F

T_8 = 90°F

T_9 - 125°F

14.6% psi = atm. pressure

State Pt.	T(°F)	P(psia)	x $(\frac{lbr}{lbs})$	h $\frac{Btu}{lb}$	$\dot{m}$ $(\frac{lb}{hr})$
1	165	169.2	1.0	609.1	6.2
2	158	169.2	1.0	605.5	6.2
3	86	169.2	1.0	61.0	6.2
4	50	89.2	1.0	61.0	6.2
5	50	89.2	1.0	547.3	6.2
6	86	89.2	.62	-40.0	22.3
7	86	169.2	.62	-40.0	22.3
8	90	169.2	.62	-39.0	22.3
9	125	169.2	.62	0.0	22.3
10	165	169.2	.48	35.0	16.2
11	119	169.2	.48	-18.9	16.2
12	119	89.2	.48	-18.9	16.2

Table 1. Theoretical Analysis of System

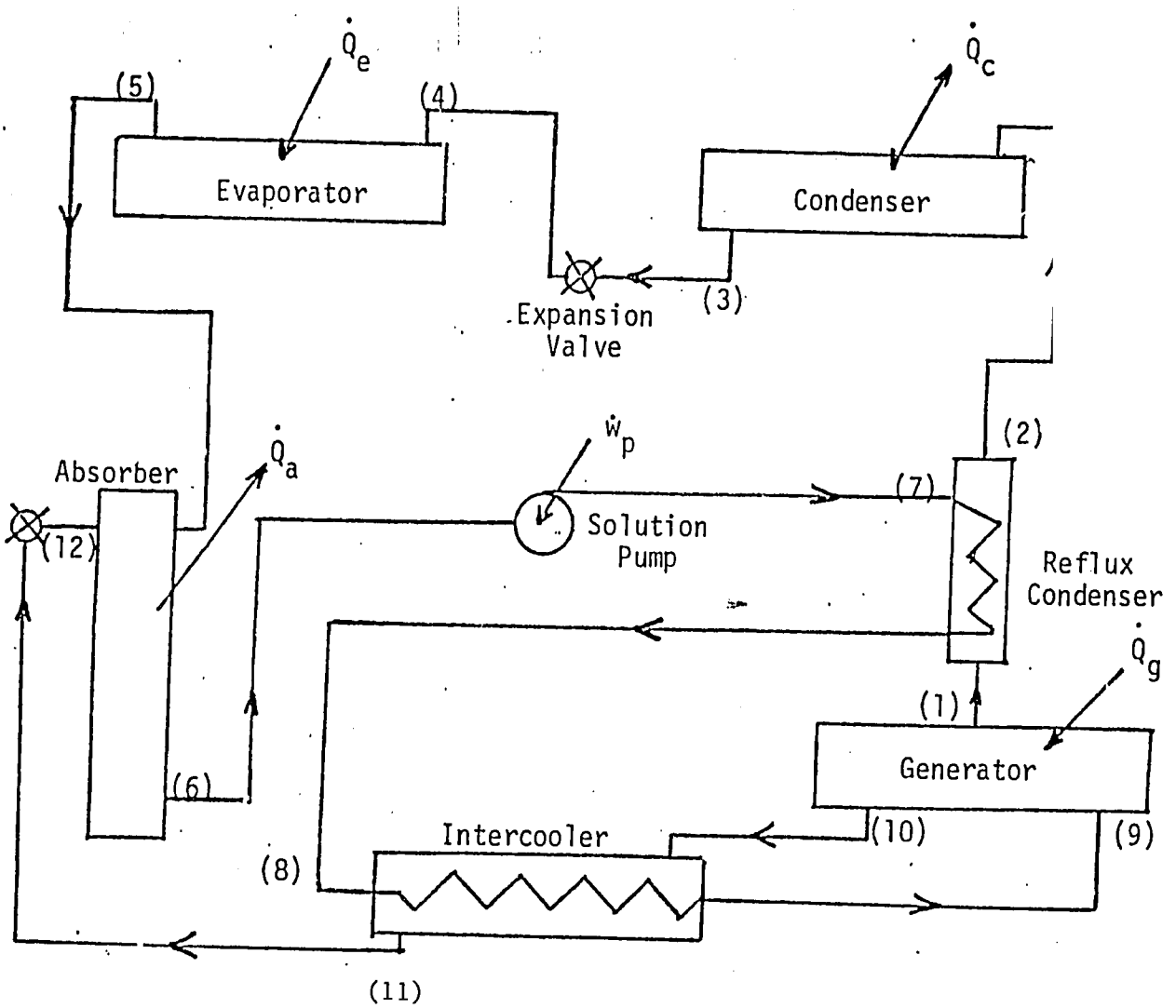

Figure 1. Continuous Absorption System (Freen, P., 1983)

The cooling or refrigerating effect is achieved at the evaporator where the refrigerant flows under much lower pressure than the condenser. The heat utilized for this expansion is therefore provided from the space intended for cooling. The cycle is completed as the refrigerant enters the absorber where it is absorbed by the weak solution pair from the generator via the intercooler.

The main source of inefficiency in absorption system is sensible heat losses as the hot absorbent from the generator is conveyed to the absorber. Much of this heat, however, could be recoverd in the intercooler by the refrigerant-absorbent being pumped back to the generator.

Analysis

A precursor to actual system sizing is the analysis of load as well as the system's assumed operating conditions. It is considered beyond the scope of the project to get into actual load determination since the main focus of the project was an existing ¼ ton system. However, it is assumed, as would be seen in later sections, that the system is to be operated by solar flat plate collectors and the actual sizing of this will be done.

Most of what follows hereon is in the same line of analysis as given by the original designer of the ¼ ton system. The project group members went through the analysis as a learning experience and to familiarize themselves with the mechanics involved.

For the analysis, certain prior assumptions had to be made; the cooling capacity $\dot{Q}_e$ and evaporator temperature T_4 are set by the refrigeration requirements. The cooling water temperature T_3 and T_6 in the condenser and absorber respectively are also pre-determined. For the practical sizing of the reflux condenser and intercooler, T_8 and T_9 are also predetermined. The generator temperature T_{10} is so

chosen to allow for sufficient gradient between heat source and the generator. See Table 1.

Once these state points are chosen, it follows from the continuity of the system that other state points are determined.

The temperature of the saturated fluid in the condenser and evaporator fixes the pressures so that the high and low pressures be ome

$$P_L = P_4 = P_5 = P_6 = P_{12}$$

and $P_H = P_3 = P_2 = P_1 = P_{10} = P_9 = P_{11} = P_8 = P_7$

where P_L = low pressure

P_H = high pressure

From an enthalpy-concentration chart, respective concentration of the refrigerant-absorbent concentration can be derived since pressures and temperatures are known, i.e.

$$X_1 = X_2 = X_3 = X_4 = X_5 = 1.0$$

$$X_a = X_6 = X_7 = X_8 = X_9$$

$$X_g = X_{10} = X_{11} = X_{12}$$

Where X = refrigerant concentration $\frac{\text{lbr}}{\text{lbs}}$

For the circulation of the system, the following mass balance can be done

$$\dot{m}_a = \dot{m}_{10} = \dot{m}_{11} = \dot{m}_{12}$$

$$\dot{m}_g = \dot{m}_6 = \dot{m}_7 = \dot{m}_8 = \dot{m}_9$$

$$\dot{m}_r = \dot{m}_1 = \dot{m}_2 = \dot{m}_3 = \dot{m}_4 = \dot{m}_5$$

$$\dot{m}_g = \dot{m}_{10} + \dot{m}_r$$

$$\dot{m}_g X_g = \dot{m}_r(1) + \dot{m}_{10} X_{10}$$

The enthalpies are then derived from an h - X diagram except h_2 and h_{11} and h_{12}.

Once $\dot{m}_g$ is determined

$$h_2 = h_1 - \dot{m}_g (h_8 - h_7)/\dot{m}_r$$

$$h_{11} = h_{10} - \dot{m}_g (h_g - h_8)/\dot{m}_{10}$$

and $h_{11} = h_{12}$

with $\dot{m}_r$ known, the amount of heat removed from the condenser can be calculated

$$\dot{Q}_e - \dot{m}_r (h_3 - h_2)$$

the heat provided by the generator becomes

$$\dot{Q}_g = \dot{m}_1 h_1 + \dot{m}_{10} h_{10} - \dot{m}_g h_g$$

the heat removed from the absorber is calculated as

$$\dot{Q}_a = \dot{m}_6 h_6 - \dot{m}_{12} h_{12} - \dot{m}_5 h_5$$

The first thermodynamic analysis requires that

$$\dot{Q}_e + \dot{Q}_g + \dot{Q}_c + \dot{Q}_a + \dot{W}_p = 0$$

The coefficient of performance (COP) is defined as

$$COP = \frac{\dot{Q}_e}{\dot{Q}_g}$$

and the refrigeration efficiency as

$$\eta_r = \frac{COP}{COP_c}$$

System's Design

Once the mass and energy flow rates are determined for the system components, exchanger and pipe sizing can be accomplished. For instance, the basic equation for steady condition heat exchanger operation is given by

$$dq = U (\Delta t) dA$$

where U is an overall heat exchange coefficient Δt_o is the overall temperature difference between the fluids.

The above, when integrated for a finite size exchanger, will yield

$$q = AU(\Delta t)_m$$

Where $(\Delta t)_m$ is given as the logarithmic mean of the terminal temperature differences. Overall U values for heat-exchangers can be obtained from manufacturers.

HEAT SOURCE DESIGN FOR THE GENERATOR OF THE AMMONIA WATER REFRIGERATION UNIT

In this section we are interested in the heat source to provide added heat to the generator. The selection of the refrigerant absorption pair depends on the range of temperature within which the cycle is operating. By selecting ammonia-water pair, it is possible to operate the system at low temperatures. The interest of low temperature operation resides in the fact that low temperature heat sources can be obtained from solar energy (flat plate collectors), waste or low grade heat.

In this case we have opted for the use of flat plate collectors as a heat source. The criteria for this choice are:

- Solar energy is available everywhere;
- Flat plate collector technology is now well known;
- Flat plate collectors can be manufactured in developing countries.

Design Conditions

The generator has been sized to satisfy the refrigeration load desired. The generator and heat exchanger in which the heat added is removed by the solution causing the ammonia to be generated. The working conditions (temperature, pressure, flow rates) of the generator are now known. In relation with these conditions the objective is to size the heat source.

Generator State Points

Generator solution temperature = $160^{o}F = 344^{o}K$

Generator water in temperature = $170^{o}F = 349.6^{o}K$

Generator water out temperature = $165^{o}F = 347^{o}K$

Generator water flow rate = 2.14 gpm = 0.133 kg/sec

Generator heat addition rate = 5367 Btu

Generator tube area = 4.6 ft^2

System Configuration

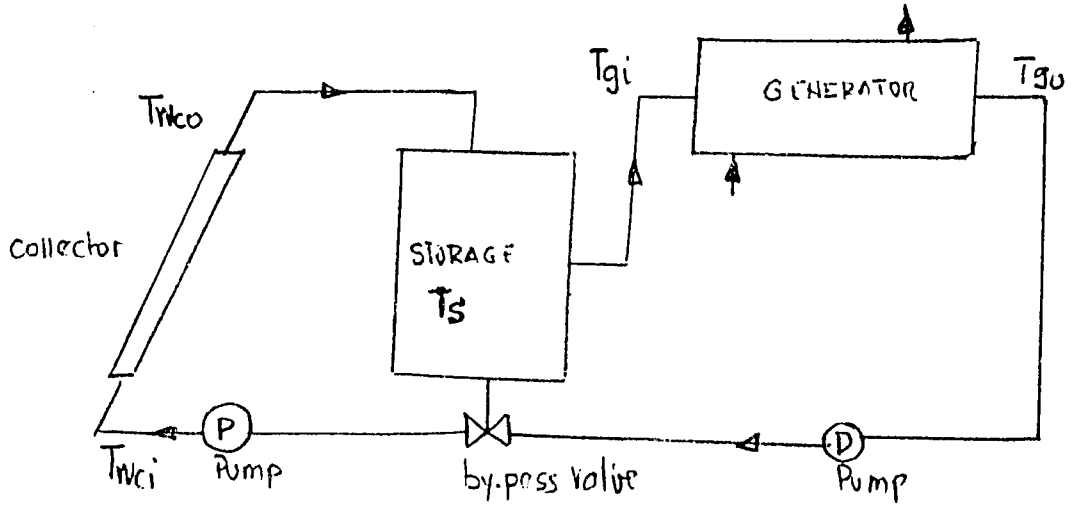

Twco = Temperature of water out of collector = $350^{o}K$

Twci = Temperature of water at inlet of collector = $347^{o}K$

Ts = Storage temperature = 350°

Tgi = Temperature of water at generator inlet = $350^{o}K$

Tgo - Temperature of water at generator outlet = $347^{o}K$

Ts = Temperature of storage water = $350^{o}K$

Collector pre-sizing

$$Qu = \dot{m}cp\ (Twco - Twci)$$

Qu = useful energy transfered to water in collector. Assuming a collector efficiency of Er - 1000 Btu/ft^2 day. We determine the collector area: Ac

$$Ac = \frac{Qu}{Ec}$$

$$\dot{m} = 0.133 \text{ kg/sec}$$

$$cp = 4.179 \frac{KJ}{kg\ ^{o}C}$$

$$Ec = 1000 \text{ Btu/ft}^2 \text{ day} = 41.87 \frac{W}{ft^2}$$

$$\underline{Ac = 3.0\ m^2}$$

Collector Specification

One glass cover

Absorber plate = 25 mm copper sheet

Absorber coating = black coating

absorptance = 0.95

emittance = 0.10

Absorber tubes = 12.5 mm inner diameter

Plate to cover spacing - 25 mm

Glass emittance - 0.88

Back insulation thickness - 50 mm

Back insulation conductivity - 0.045 w/m.k

Wind heat transfer coefficient - 10 w/m^2k

We assume: - plate temperature of $130^oC = 403^ok$

- cover temperature of $45^oC = 318^ok$

Once these assumptions and specifications made, the equations from theoretical analysis of flat plate collectors can be used to evaluate area knowing the useful energy to be delivered by the collector.

Heat Transfer Coefficient Calculation

Using general equation of collector analysis we find;

Ut - 7.016 w/m^2k

Ub = 0.96 w/m^2k

U_L = 8 w/m^2k

Ti = 69^oC (temperature of cover)

Fr - 0.79

For a site where mean daily insolation is 800 w/m^2 (daily average obtained for 7 hours a day), we compute the area of the collector Ac

$$Ac - 2.66m^2 \simeq 30m^2$$

A collector of 1.5m x 2.0m is required to run the system.

T he estimated efficiency for 30^oC ambient temperature is

$$\eta = 24\%$$

THEORETICAL REVIEW OF FLAT PLATE COLLECTOR DESIGN

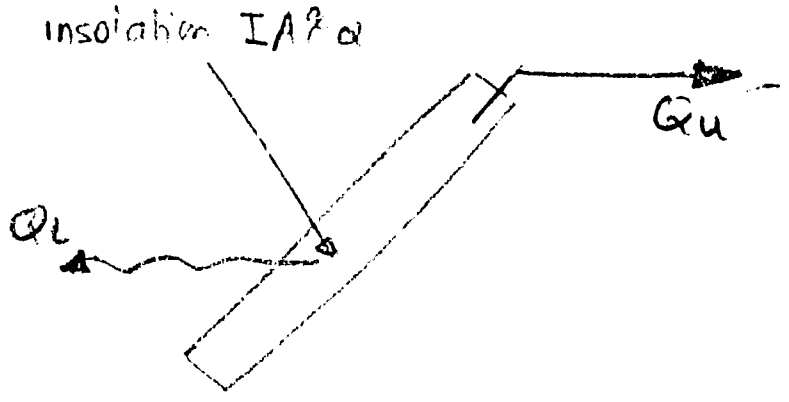

For a steady state the heat balance over the collector is:

$$Qu = IA\tau d - Q_L \qquad \ldots(1)$$

Qu = useful energy transfered to water entering the collector

Qu = heat losses

I = incident solar radiation

A = area of the collector

τ = overall transmittance of the collector covers

d = absortance of the absorber plate

Q_L can be written as:

$$Q_L = U_L A[TP - Ta] \qquad \ldots(2)$$

U_L = overall heat loss coefficient

A = collector area

Tp = mean temperature of the collector plate

Ta = ambient temperature

By continuing these two equations we obtain:

$$Qu = A\,[I\tau d - U_L\,(Tp - Ta)] \qquad \ldots(3)$$

CALCULATION OF THE OVERALL LOSS COEFFICIENT

The thermal network of a two-cover flat plate collector is:

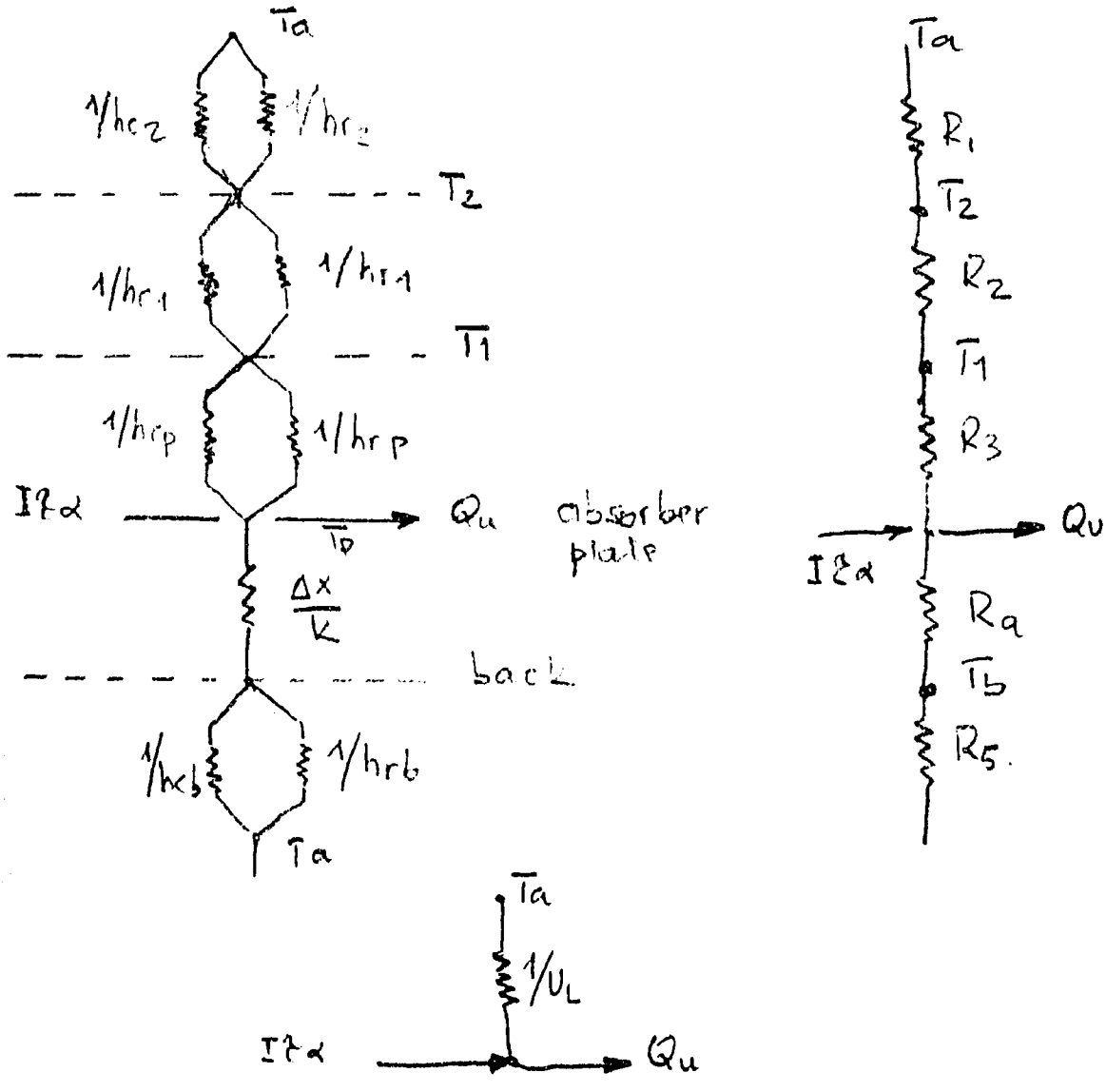

hc = convective heat transfer coefficient

hr = radiative heat transfer coefficient

$$R_1 = \frac{1}{hc_2 + hr_2} \qquad R_3 = \frac{1}{hcp + hrp} \qquad \ldots(4)$$

$$R_2 = \frac{1}{hc1 + hr1} \qquad R_4 = \frac{\Delta X}{k} \qquad R_5 = \frac{1}{hcb + hrb}$$

$$U_L = \frac{1}{R_1 + R_2 + R_3} + \frac{1}{R_4 + R_5}$$

We define a top loss coefficient $= U_t = \frac{1}{R_1 + R_2 + R_3}$

a back loss coefficient $= U_b = \frac{1}{R_4 + R_5}$

Edge losses on the collector combined to back losses give

$$U_b = \frac{k}{x} \left(A + \frac{Ae}{Ac}\right)$$

Ac = area of the edge

k = insulation thermal conductivity

by defining the collector heat removal factor F_R, Qu is given by

$$Qu = F_R A[I\tau d - U_L (Tin - Ta)]$$

$$F_R = \frac{\dot{m}\ Cp}{U_L} [1 - e^{-\frac{1}{c}}]$$

$$c = \frac{\dot{m}\ Cp}{U_L\ F'}$$

F' = collector efficiency factor

$$F' = \frac{1/U_L}{w\left[\frac{1}{U_L[D + (W-D)\ F]} + \frac{1}{CB} + \frac{1}{\pi Dihf}\right]}$$

U_L = collector overall heat loss coefficient

w = distance between tubes centers on the absorber plate

D = outside diameter of the tube

F = fin efficiency

CB = bmd conductance

Di = inside diameter of the tube

hf = inside convective film coefficient for the fluid

Figure 2. Absorption System Test Module

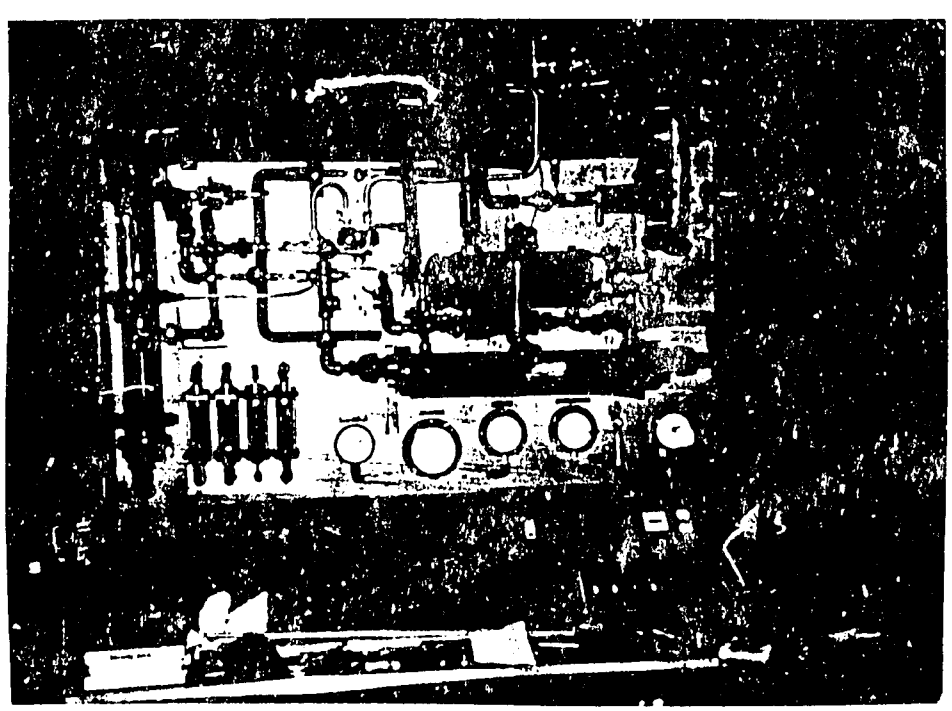

DESCRIPTION OF THE-SYSTEM USED IN THIS PROJECT

The ammonia-water refrigeration unit used as test facility was built as a requirement for the degree of Master of Engineering. In carrying out this design, the main objectives were:

- Build a test module capable of utilizing either ammonia-water or R22-DNF refrigerant pairs;
- Define a system configuration easy to use as a teaching device;

These two objectives have led to the design of a compact unit with a front side and back side.

- The front side is a control board comprised of the measurement and control devices (flowmeter, pressure gauges, sight glasses, etc.), and also the main components of the system (generator, reflux condenser, condenser, absorber, intercooler).
- The back side of the unit comprises all the connecting tubes between the unit components. Also the two circulation pumps are on this side.

This arrangement of the system has necessitated a complicated tubing connection (with union nuts). On the other hand, the measuring devices have implied many junctions on the main load of the system. All these details as contributed to increase the possibilities of leakage.

Diagnostic of the Test Module

The first step was to check leakages in the system. The following procedure was adopted:

- Draining the system of its content
- Pressurize the system to 250 psia with water and check leakage

System Draining

The system contained ammonia-water solution left inside since the last time it was operated. To accomplish this step we introduced water into the solution loop by hooking the drain plug of the absorber to the public mains and opening the plumbing drain outlet at the generator. After 30 minutes of draining, the system was cleaned.

Leakage Testing

After the ammonia-water solution was drained out, the main loop was pressurized by closing the generator drain outlet and pumping water in the system with a positive displacement pump. In this operation one should avoid compressing trapped air in the system. To achieve this, disconnect the plumbing outlet at the upper part of the reflux condenser (highest point of the system), and then watch the sight glass on the condenser. If air is trapped, bubbles will be seen. When the air is released, close the plumbing at the reflux and the outlet drain at the generator. The leakage test was performed with a pressure of 250 psia.

Problems Encountered

The major technical failure of the system was leakage. During the leakage test, the following leakage points were identified:

1. The by-pass junction at the circulation pump,
2. The glass sight tube on the condenser.

Other minor leakage was also detected. All these leakages occured on the union nut junctions, and by tightening these nuts, we stopped these apparent leakages.

The circulation pump used on the system is a positive displacement pump. Operating ammonia with this type of pump can cause an explosion if in running the unit one valve remains closed, and if there is no security valve.

It was decided to change the pump and provide a security valve. It took a long time to replace the pump. After replacement, we restarted the pressure test but there were leakages.

Experience Gained

By working on the system, the following practical experiences have been gained:

- Identification of the system components
- Understanding of the actual operation cycle
- Understanding potential problem areas

CONCLUSION

Although time was not available to make the test module operate, the main objectives of the project was achieved.

An important experience was gained by being exposed to one of the main problems of absorption cycles, viz., leakage in the circulation system. The importance of this was realized and some skill was gained in analysing it and controlling it to some extent.

An understanding of the theoretical analysis and design of the absorption system was achieved by each member of the group.

It is concluded that absorption refrigeration and cooling cycles have potential in developing countries if adapted to employ alternative energy sources, although this is subjected to further research. This will probably be followed up by members of the group in their respective countries.

REFERENCES

1. Baumeister, T. et al, Marks Standard Handbook for Mechanical Engineers, McGraw-Hill Book Co., 1978.

2. Bush, M., Selected Topics in Alternative Energy Technologies for Developing Countries, TAET, Univ. of Florida, 1984

3. Farber, E., Lecture Notes: Refrigeration and Other Cooling Cycles, TAET, Univ. of Florida, 1984

4. Freen, P.D., An Investigation of Refrigerant Pair Performance Using a New Absorption Refrigeration Test Module, Master's Thesis, TAET, Univ. of Florida, 1983

5. Kreider, J.F.; Kreith, F., Solar Energy Handbook, McGraw-Hill Book Co., 1981