PN-AAW-098
93-5716
ISN = 47570

TESTING AND EFFICIENCY IMPROVEMENT

OF A SOLAR AIR COLLECTOR

BY:
Nzabonimana Camille
Researcher in C.E.A.E.R./
National University of Rwanda
P.O. Box 117
Butare/Rwanda

TRAINING IN ALTERNATIVE ENERGY TECHNOLOGIES

T.A.E.T.

SESSION 8

August 22 - December 9

1983

A Cooperative Program of the U.S. Agency for
International Development and the
University of Florida

Gainesville, Florida (U.S.A.)

CONTENTS

		PAGE
1.	ACKNOWLEDGEMENT	3
2.	ABSTRACT	4
3.	INTRODUCTION	5
4.	THEORITICAL BACKGROUND ON COLLECTORS TESTING	7
5.	DESCRIPTION OF THE TESTED SOLAR AIR COLLECTOR	10
6.	TESTS PROCEDURE AND USED INSTRUMENTATION	11
7.	CONCLUSION	14
8.	APPENDIX	15
9.	NOMENCLATURE	20
10.	REFERENCES	21

ACKNOWLEDGEMENT

The author would like to express his sincere thanks to the members of the Training in Alternative Energy Technologies staff, Session 8, for their unrelenting guidance and cooperation.

Thanks also go to Mr. Vann Chesney, member of the workshop staff, for making available in time the materials and tools needed to build and test the solar air collector.

By the same opportunity, I wish to express my sincere gratitude to U.S.A.I.D. for making possible this timely training in Alternative Energy Technologies.

ABSTRACT

A model of a solar air collector as a warm air source for crop drying is tested. The performance of the collector is expected to be improved by introducing in it overlapped parallel black painted plates.

The efficiency determination is made under the test guidance established in the ASHRAE standard 93-77. The efficiency is measured under steady state air flow conditions. The heat removal factor (Fr) and the overall loss coefficient (U_L) are derived from the collector performance curve plotted from the data measured.

INTRODUCTION

Sclar air collectors can be used for many purposes, including crop drying, space heating... Because of their inherent simplicity, they also offer the possibility of providing cheap, low-grade heat, at temperatures up to 100°F (38°C) above ambient.

There are many possible designs for solar air collectors, from the point of view of both materials and configurations. These in turn lead to a variety of costs and collection efficiencies.

In the case of crop drying process, two principal aspects are considered: - the solar heating of the working fluid (generally air) and the drying chamber wherein the heated air extracts moisture from the material to be dried.

The solar heating function consists of separate solar air heater collectors using natural or forced convection to preheat the ambiant air, and reduce its relative humidity and (in the chamber) direct, in situ, heating of air which in turn directly dehydrates the product.

For economic reasons, maximum drying rates are usually desired. Product quality must be considered, however, and excessive temperatures must be avoided in many materials (peanut, fish...). In addition, because drying occurs at the surface, those materials which have a tendency to form hard, dry surfaces, relatively imprevious to liquid and vapor transfer must be dried at a rate sufficiently low to avoid this crust formation. Close control of heat transfer and vaporization rates, either by limiting the heat supply or by control of the humidity of the surrounding air must be provided.

Thus, for solar dryers designers, here appears the need to know the performance and kind of collector to be used for appropriate crop drying purposes.

THEORETICAL BACKGROUND ON COLLECTORS TESTING

The thermal analysis of a solar collector is quite complex. However, according to the ASHRAE 93-77 standard, the thermal performance of the solar collector is determined in part by obtaining values of instantaneous efficiency for a combination of values of incident radiation, ambient temperature, and inlet fluid temperature. This requires experimentally measuring the rate of incident solar radiation on to the solar collector as well as the rate of energy addition to the transfer fluid as it passes through the collector, all under steady state or quasi-steady state conditions.

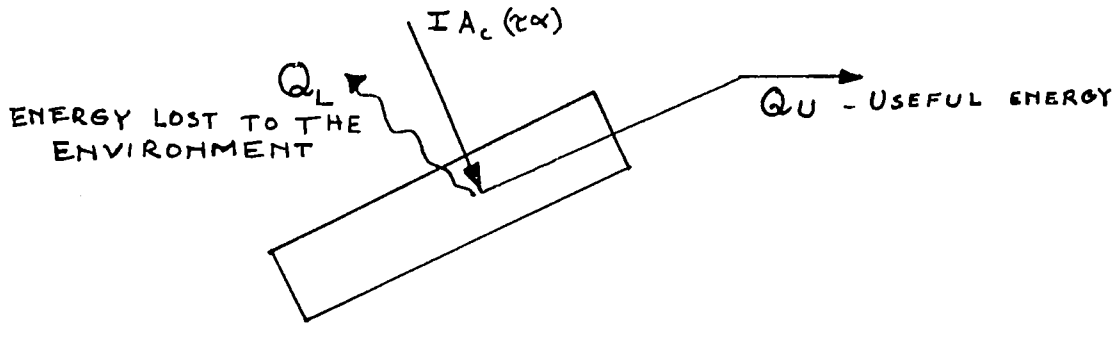

Fig: Energy Balance Over Collector.

In the steady state, the heat balance over the collector may be written

$$Qu = I\ A_c\ (\tau\alpha) - Q_L \qquad (1)$$

If measure the fluid temperatures and the fluid flow rate

$$Qu = \overset{o}{m}\ Cp\ (T_o - T_i) \qquad (2)$$

Q_L can be written as a function of the overall heat loss coefficient U_L as follows:

$$Q_L = U_L\ (Tp-Ta) \qquad (3)$$

(1), (2), and (3) become:

$$\frac{Qu}{Ac} = I\ (\tau\alpha) - U_L\ (Tp-Ta) = \frac{\dot{m}}{Ac}\ Cp\ (To-Ti) \qquad (4)$$

To assist in obtaining detailed information about performance of flat-plate collectors and to preclude the necessity for determining the average temperature of the receiver surface, it has been convenient to introduce a perameter F_R which is the actual useful energy collected by a flat-plate collector over the useful energy collected if the entire flat-plate collector surface were at the inlet fluid temperature.

Introducing this factor into Equation (4) results in:

$$\frac{Qu}{Ac} = F_R\ \{\ I\ (\tau\alpha) - U_L\ (Ti-Ta)\ \} = \frac{\dot{m}}{Ac}\ C_p\ (To-Ti) \qquad (5)$$

If the solar collector efficiency is defined as:

$$\eta_g = \frac{Qu/Ag}{I} \qquad (6)$$

The efficiency of the flat plate collector is given by:

$$\eta_g = (Ac/Ag)\ Fr\ \{\ (\tau\alpha) - U_L\ \frac{(Ti - Ta)}{I}\ \} = \frac{\dot{m}\ Cp(To-Ti)}{Ag\ I} \qquad (7)$$

Equation (7) indicates that if the efficiency η_g is plotted against (Ti-Ta)/I, a straight line will result where the slope is equal to (Ac/Ag) $F_R\ U_L$ and the Y intercept is equal to (Ac/Ag) $F_R\ (\tau\alpha)$. In reality U_L is not a constant but rather a function of the temperature of the collector and of the ambient weather conditions. In addition, the product $(\tau\alpha)$ varies with the incident angle between the solar beam and the collector. Fr is also a weak function of U_L. This lead to a scatter

in the data, because of temperature dependance, wind effects, and angle of incidence variations.

In spite of these difficulties, for purposes of estimating long-time performance of many solar systems, collectors can be characterized by the intercept and the slope (i.e. $F_R(\tau\alpha)$ and $F_R U_L$).

DESCRIPTION OF THE TESTED SOLAR AIR COLLECTOR (see scheme)

The solar air collector consists of a black painted steel sheet of 1/16" thickness, which acts as an absorber of incident solar radiation. It is enclosed in a wooden frame (Ag = 48" x 31") with an insocyanurate insulation of 6/8" thickness. The whole box is covered at the top by a glass of 1/8" thickness. The glass is fixed with aluminum profiles. (Ac = 45 1/4" x 28"). The space between the absorber plate and the glass cover is 6".

The inlet air into the collector is blown through a 2" in diameter duct by a fan with a built-in adjustable air heater. A diffuser in the collector spreads out the inlet air to be heated. The air outlet is a cylindrical duct with 4 1/8" diameter.

For efficiency improvement, five parallel overlapped black painted aluminum plates, inclined with 20 degrees from the flat plate are added. 2/3 of the surface of each plate (8" x 28 1/4") are exposed to the radiation.

TESTS PROCEDURE AND USED INSTRUMENTATION

The collector has been tested indoors, in horizontal position.

An air blower with a constant air flowrate and a built-in adjustable electrical air heater was used.

A light array has been utilized as the energy source.

**The incident energy at the level of the glazing is measured as the average of energy falling in three different points of the collector, by the Eppley pyranometer model 8-48 (developed emf of $10.76 \times 10^{-6} \frac{\text{volts}}{\text{Watt } M^2}$).

**The air velocity at the outlet was measured using a hand held anemometer: Air Meter W131.

**Copper-Constantan thermocouples were used to measure the temperatures (see scheme) of

- .. the glass-cover
- .. the inlet air
- .. the outlet air
- .. the black absorber plate
- .. the black absorber parallel plates
- .. the right and left panels
- .. the bottom panel

All those temperatures are recorded by the HEWLETT Packard 7132A Strip Chart Recorder.

SCHEME OF THE COLLECTOR

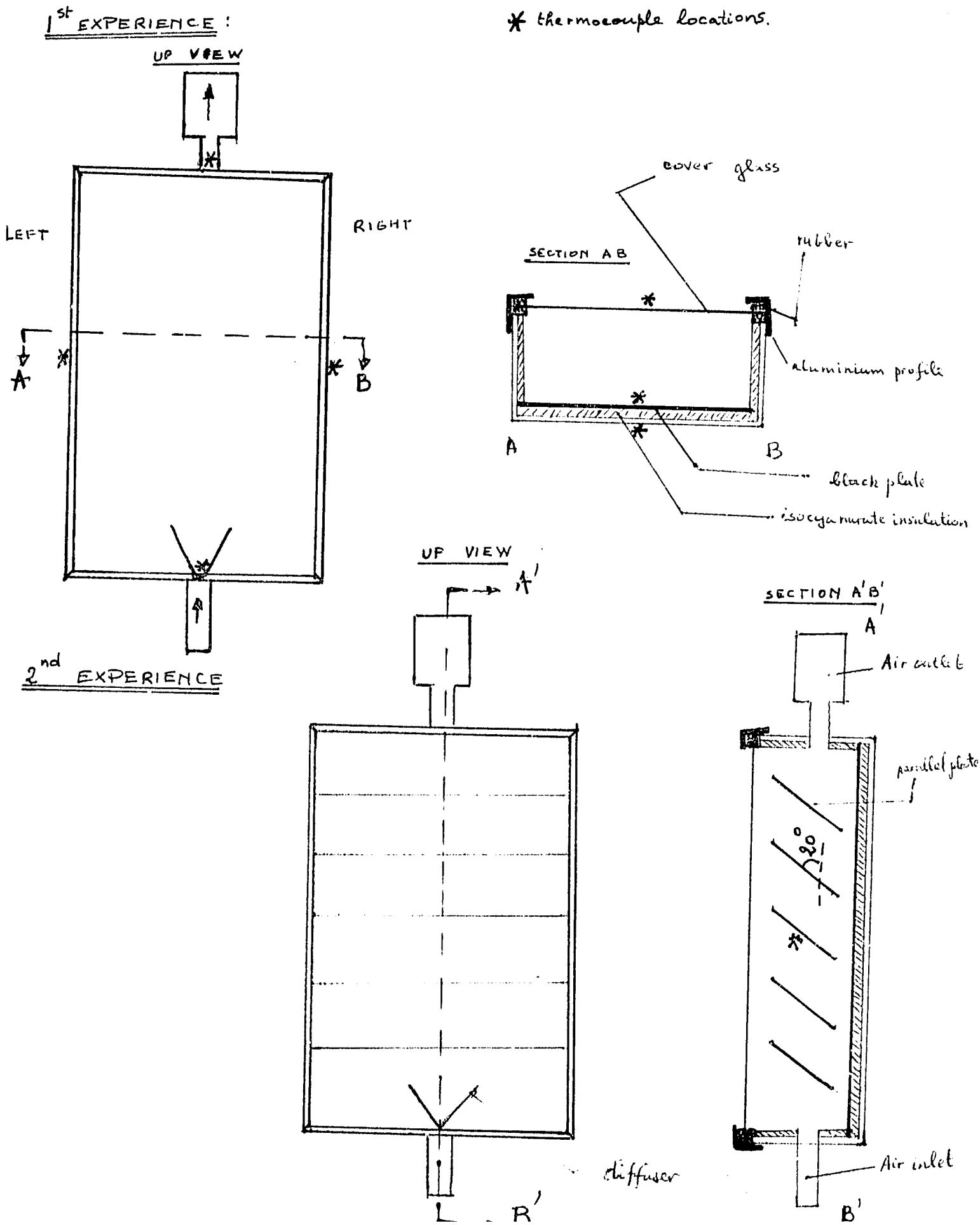

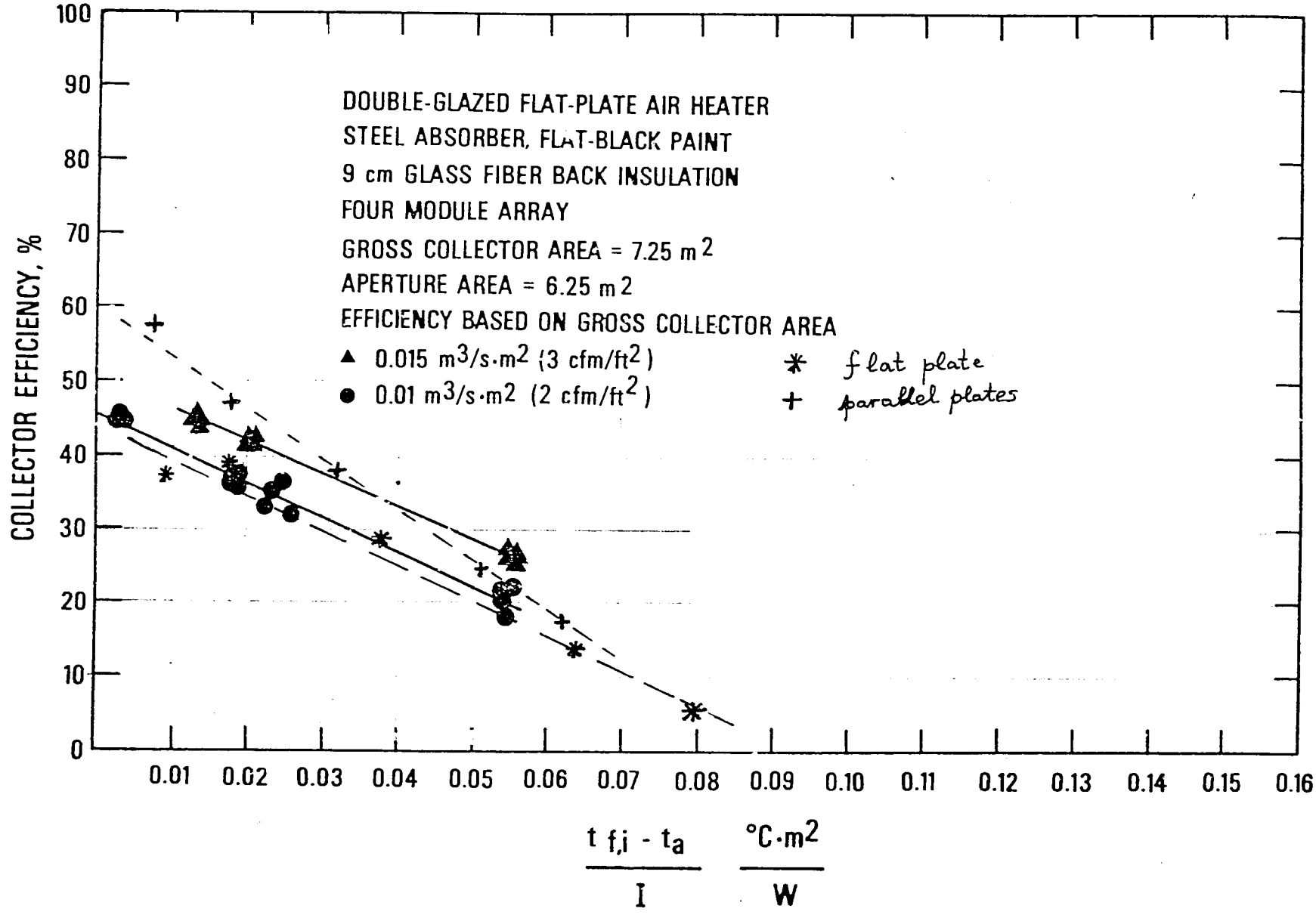

Thermal Efficiency Curves for a Flat-Plate Collector Using Air as the Transfer Fluid at Two Different Flow Rates

CONCLUSION

The test run to determine the efficiency and its improvement of the collector has been successful.

For tests conducted outdoors to determine thermal efficiency, the collectors shall be mounted in a location such that there will be no significant energy reflected onto the collector from surrounding buildings or any other surfaces in the vicinity of test stand for the duration of the test(s).

At the other hand, the tests conducted outdoors shall be conducted at times having good weather conditions. ($I \geq 630$ W/m^2 (200 Btu/hr. ft.^{2})), and the range of ambient temperatures for all reported test points comprising the efficiency curves shall be less than 30° C (54°F). More detailed information can be obtained from SHRAE testing procedure.

This work is considered as a preliminary step to the crop drying process, which requires a fan assisted air collector for air convection and/or big drying chamber for large quantity of drying products.

I hope soon to extend my experience in crop and fish drying in CEAER using those means.

APPENDIX

RECORDED DATA AND COMPUTATIONS

1. TEMPERATURES: { ^{o}F }

DATE: Nov. 3rd, 1983

ABSORBER: black painted flat steel plate.

Heater Position / Thermocouple Location	0	20	30	40	45
T plate	173	177	185	200	207
T glass	124	126	132	140	144
T in	91	101	125	157	175
Tr panel	82	82	86	90	91
T_L panel	88	89	89	91	93
T bottom panel	80	80	82	84	85
T ambiante	80	80	80	80	80
T out	124	135	150	169	180

DATE: Nov. 17th 1983

Absorber: parallel overlapped black painted aluminum plates.

Heater position / Thermocouple Location	0	20	30	40	45
T plate	139	142	153	164	171
T glass	116	120	126	129	139
T in	90	102	120	142	156
Tr panel	86	86	87	86	89
T_L panel	87	87	88	88	87
T bottom panel	82	82	81	81	82
T out	141	144	153	164	171
T plates	154	160	172	185	194
T ambiance	81	81	81	81	81

2. Incident energy at the level of glazing layer.

$$I = 662.63\ W/_{M^2}\quad (210.15\ {}^{BTU}/_{Ft.^2}\ HR.)$$

3. Air velocity at the outlet

$$V = 1.22\ {}^{m}/_{sec.}$$

4. Area of the collector

- Aperture area : $Ac = 8176.5 \times 10^{-4} m^2$
- gross area : $Ag = 9599.9 \times 10^{-4} m^2$

5. Area of the outlet duct: $A = 86.54 \times 10^{-4}\ m^2$

<u>The mass flow rate $\dot{m}$</u>

$$\dot{m} = \rho\ A\ V$$

$$\dot{m} = 1.204\ {}^{Kg}/_{m^3} \times 86.54 \times 10^{-4}\ M^2 \times 1.22\ {}^{m}/_{s}$$

$$\dot{m} = 127.11 \times 10^{-4}\ {}^{KG}/_{s}$$

<u>The efficiences η_g</u>

$$\eta_g = \frac{\dot{m}\ Cp\ (To-Ti)}{I\ Ag}$$

1st Experience: November 3rd, 1983

Heat position Temperature	0	20	30	40	45
Ti {°C}	32.7	38.3	51.6	69.4	79.4
To {°C}	51.1	57.1	65.5	76.1	82.2
η_g {% }	37.7	38.2	28.1	13.5	5.6

2nd Experience: November 17, 1983

HEAT POSITION TEMPERATURE	0	20	30	40	45
Ti {°C }	32.2	38.8	48.8	61.1	68.8
To {°C }	60.5	62.2	67.2	73.3	77.2
η_g { % }	57.2	47.3	37.7	24.6	16.9

η_g versus $\frac{Ti-Ta}{I}$

1st Experience: November 3rd, 1983

$\frac{Ti-Ta}{I}$	0.0092	0.0176	0.0377	0.0645	0.0796
η_g (%)	37.7	38.2	28.1	13.5	5.6

2nd Experience: November 17, 1983

$\frac{Ti-Ta}{I}$	0.0075	0.0175	0.0325	0.0514	0.0627
η_g (%)	57.2	47.3	37.7	24.6	16.9

Determination of F_R and U_L

$$\text{Slope} = \frac{Ac}{Ag} \; F_R \; U_L$$

$$\text{Intercep} = \frac{Ac}{Ag} \; F_R \; (\tau\alpha) \qquad \text{Assume}(\tau\alpha) = 0.85$$

1st Experience:

Slope = -4.82 intercept = 0.44

$\boxed{Fr = 0.60}$ $\boxed{U_L = 9.31 \; W/m^2 \; {}^oK}$

2nd Experience:

Slope = -.712 intercept = 0.61

$\boxed{Fr = 0.84}$ $\boxed{U_L = 0.06 \; W/m^2 \; {}^oK}$

NOMENCLATURE

Q_L : Energy lost to the environment

U_L : Overall heat loss coefficient $W/_{m^2}$ ^oC

Tp : Average temperature of the absorbing surface, ^oC

Ta : Ambiant temperature, ^oC

Qu : rate of useful energy extraction from the collector, W

Ac : transparent frontal area of the collector, m^2

Ag : gross collector area, m^2

I : Solar irradiation, $W/_{m^2}$

$(\tau\alpha)$: transmittance - absorptance product, dimensionless

$\dot{m}$: mass flow rate of the transfer fluid, Kg/S

To : temperature of the transfer fluid leaving the collector ^oC

Ti : temperature of the transfer fluid entering the collector ^oC

Cp : specific heat of the transfer fluid J/Kg ^oC

ηg : collector efficiency based on gross collector area, %

F_R : solar collector heat removal factor, dimensionless

REFERENCES

(1) ASHRAE, Standard 93-77, American Society of Heating, Refrigeration, and Air Conditioning Engineers, New York (1977) "Methods of testing to determine the Thermal Performance of Solar Collectors."

(2) John A. Duffie, William A. Beckham "Solar Engineering of Thermal Processes", John Wiley * Sons, New York (1980)

(3) Dr. Jan F. Kreider and Dr. Frank Kreith, "Solar Energy Handbook", McGraw-Hill (1981)

(4) Frank Kreith, Jan F. Kreider, "Principles of Solar Engineering", McGraw-Hill (1978)

(5) Sayigh, A.A.M., "Solar Energy Engineering" Acad. Press (1977).

(6) Martin Bush, "Selected Topics in Alternative Energy Technologies for Developing Countries." Notes for T.A.E.T. Program/Univ. of Florida (1983).