PN-AAW-081

A COMPARISON OF EFFECTIVENESS OF TRADITIONAL METAL CHARCOAL STOVE "SIGIRI" AND AN IMPROVED METAL CHARCOAL STOVE

TRAINING IN ALTERNATIVE ENERGY TECHNOLOGIES PROGRAM

7th SESSION, FEBRUARY 1983
UNIVERSITY OF FLORIDA
GAINESVILLE, FLORIDA, U.S.A.

By
Francis Joseph Mkwawa
Capital Development Authority
P.O. Box 913
Dodoma
Tanzania, East Africa

CONTENTS

Chapter	Page
1. Acknowledgment	ii
2. Introduction	1
3. Design of the stove	4
4. Experiments to compare the two types of metal charcoal stoves	5
5. Discussion of the result	6
6. Discussion and conclusion	7
7. Appendix	10
8. References	23

ACKNOWLEDGMENT

I wish to express my sincere thanks to the T.A.E.T. program staff for their kind cooperation and indispensable assistance I received during the fifteen weeks course in alternative energy technologies. Thanks are particularly directed to Dr. Farber, Dr. Pagano, Dr. Bush and Inky Laketek for their encouragement and continual supervision. Finally, special thanks are due to the government of U.S.A. through AID in granting the sponsorship which made possible for me to participate in this program.

INTRODUCTION

Dodoma region, which is situated in the central region of Tanzania, has an arid to semi-arid climate. Its average rainfall is 600 mm. The principal source of energy for cooking, heating and many other domestic tasks is fuelwood which is obtained locally from trees and shrubs. Most people even from the urban areas obtain their fuelwood from the indigenous unmanaged forest lands for their energy supplies withing walking distances from their homes. In the rural areas fuelwood is considered to be a "free good."

Fuelwood and charcoal are becoming increasingly important renewable fuel sources in Dodoma City District. Charcoal, for example, is used for cooking even in some instances where income levels of users allow for the purchase of other forms of fuels. Charcoal is produced by the rural people but they seldom use it. Charcoal is a cash crop mostly to earn the rural people revenues and it is a predominantly man's occupation. Most of the charcoal used in the urban areas comes from trees in nearby hills and transported to urban users. Charcoal is becoming dominant source of fuel as opposed to fuelwood because it is more convenient form of fuel to use. Charcoal has less moisture content than wood and is relatively easy to ignite. Charcoal burns relatively evenly providing a concentrated and steady heat with little or no smoke. It is also easy to store charcoal. The colorific value of charcoal per kilo is high compared to wood of the same weight and has an efficiency of about 20% in an open stove which is also a high value compared to wood. Charcoal has also a distinct advantage over fuelwood when transport distances are long. Nevertheless, fuelwood is cheaper to transport compared to charcoal within short distances of not more than 50 miles radius from the final user.

Unfortunately wood resource is receding very fast not only in Dodoma but also in many parts of the country. The current potential production of fuelwood and charcoal in Tanzania is about 34 million cubic meters (Ministry of Natural Resources and Tourism, 1979), but the figures for 1985 and 2000 will be much higher. In many parts of the country, fuelwood is collected from distances greater than 5 kilometers. Many man hours and energy are spent for collecting fuel.

Charcoal is an increasingly important renewable fuel source, but is likely to be in short supply in many urban areas in the future if misuse and abuse of our natural forests continue.

Scarcity of this fuel will impact detrimentally on wood resources and will also have a big impact on the environment. The vegetation cover has been reduced to a critical level at the moment and will continue to diminish if rehabilitation measures are not taken immediately. The rate of population growth is increasing rapidly in the New Capital; actually is surpasses the rate of energy supply. A well planned afforestation program is underway in Dodoma at the moment, but it will take more than ten years to make our first harvest. There are a number of factors which influence low biomass production in Dodoma. Climate being one of the major contributing factors for low biological productivity, compounded by bad land use management, over-grazing, bush fires and bad watershed management. Therefore, efficient methods of natural resource utilization is needed. More effort should be directed to conservation of our natural resources and we should manage our forests in a sustainable basis. Regeneration of indigenous tree species should be encouraged while the introduction of homogeneous stands of exotic tree species should be taken with caution.

To avoid a fuelwood crisis in Dodoma region and many parts of the country, careful consideration should be taken on efficient methods of energy conversion and utilization of our scarce wood resource. For example, the traditional method of charcoal production from earth kilns is very inefficient. Much of the energy from the wood is lost through the conversion method. About 15% of the wood energy is left when wood is converted into charcoal in this way. In other words, it takes about 12 tons of wood to make one ton of charcoal. Moreover, much thermic energy is lost by using the traditional metal charcoal stove called SIGIRI in Tanzania. There is a need, therefore, to improve the conversion method and stoves efficiency in order to minimize energy losses.

DESIGN OF THE STOVE

Basic requirements should be considered when attempting to introduce a new stove. The improved metal charcoal stove, which was designed by the author of this report, has the following features:

- design based on existing metal charcoal stove
- easy to construct from local materials by traditional stove makers
- easy to operate
- fuel efficient
- durable and low cost

NAME OF STOVE: Tanzanian Improved "SIGIRI"

HISTORY: This stove was designed by F.J. Mkwawa, participant in the T.A.E.T. program, Gainesville, Florida, U.S.A. The stove is based on the marriage of the traditional metal charcoal stove "SIGIRI" (Fig. 1a) and the Chinese kerosene stove. Laboratory tests have been carried out by the author in T.A.E.T. program laboratory.

DESCRIPTION: The improved stove was made from galvanized steel sheet for convenience of construction in T.A.E.T. laboratory. But scrap metal or discarded old oil drums can be used. Only rivets were used when assembling the stove in order to reduce construction costs.

Table 1 Specification of the Improved Stove
(Diagram in Appendix A)

Height	20.3 cm
Diameter of outer lining	26.5 cm
Diameter of inner lining	20.1 cm
Diameter of cone	18.0 cm
Height of the fire box	7.6 cm
Diameter of the grate	10.3 cm
Weight	5.413 kg

Table 2 Specification of the traditional charcoal stove "SIGIRI" (Diagram in Appendix B)

Height	23.0 cm
Diameter	20.0 cm
Height of fire box	10.1 cm
Diameter of grate	19.0 cm
Weight	2.485 kg

EXPERIMENTS TO COMPARE THE TWO TYPES OF METAL CHARCOAL STOVES

Several experiments were undertaken to compare the performance of the two metal charcoal stoves. The measure of efficiency was taken for the time taken to boil a liter of water. Water was boiled in an aluminum pan, similar to aluminum pots called "sufuria" used in Tanzania, and a total number of water brought to boil by a known weight of charcoal was recorded. As soon as a liter of water boiled, it was immediately replaced by an equal volume of water for a next boil. The ambient temperatures were noted at each experiment. The boiling temperature was taken as 100° C for the experiments took place at Gainesville, Florida, which is about 21 meter above sea level. Temperatures were recorded by a millivoltmeter. High temperature thermocouples, chromel/alumel, were fixed on selected parts of the stoves and hooked into the millivoltmeter. Direct readouts from the millivoltmeter were converted to ^{o}F temperature from the k charts. Temperatures were monitored for sometime after the fire extinguished in order to record heat retention of the stoves. Equal volume of petroleum spirit was used to start the fire and the starting up time was recorded. The entire temperature and fuel profile was recorded and the results tabulated* and also plotted into graphs^{+}. Charcoal used

in the experiment was made from pinewood at the T.A.E.T. laboratory. The quality of charcoal was good but the hot charcoal extinguished fast.

* Tables 3 to 7 in Appendixes H-1 to H-5

+ Graphs presented by Fig. 3 to 7 in Appendixes C to G

DISCUSSION OF THE RESULTS

(i) Time to boil one liter of water (Fig. 3, Appendix C)

When 225 gm of charcoal was burned by each set, water boiled twice by the improved stove in all trails. But no boil was recorded by the traditional stove. Maximum water temperature recorded by the traditional stove was 94.4°C. The temperature at the cooling surface on the traditional stove was 443°C after 5 minutes. But the temperature fluctuated considerably as the hot gases mixed with cold ambient air current. On the other hand, the improved stove recorded its first boil after 8 minutes and the second boil was 18 minutes from start. Maximum temperature was 343°C eight minutes from start.

(ii) Temperature at cooling surface (Fig. 4, Appendix D)

The amount of charcoal burned was raised from 225 gm to 373 gm in order for the traditional stove to boil water. The same weight of charcoal, 225 gm, was burned in the improved stove because the fire box could not hold more charcoal. Maximum temperature reached by the traditional stove was 543°C in 13 minutes and two liters of water was boiled. The first liter boiled 8 minutes, while the second liter boiled 34 minutes from the start. Two boils were recorded by the improved stove at the 8th and 19th minute from start up time. There was only 11 minutes between the two boils and the maximum temperature reached was 414°C. It could be observed that the time between the two boils recorded by the traditional stove was 26 minutes.

(iii) Temperature on the burning charcoal bed (Fig. 5, Appendix E)

It could be observed that during this experiment the temperature at the charcoal bed reached by the improved stove was 726°C after 13 minutes from the start. The highest temperature was recorded between the two boilding time at 9th and 18th minute. The highest temperature reached by the traditional stove was 653°C and water boiled twice. The time between the two boild was 26 minutes, while it took 9 minutes only to make two boils by the improved stove.

(iv) Temperature on the stove lining (Fig. 6, Appendix F)

(a) Comparison between outer linings of the improved stove and the traditional stove

Experimental results showed that during this trial the temperature on the outer lining of the improved stove was fairly low. The highest temperature recorded was 103°C. On the other hand the maximum temperature recorded on the lining of the traditional stove was 144°C.

(b) Comparison between outer lining of the traditional stove and inner lining of the improved stove (Fig. 7, Appendix G)

The highest temperature reached on the inner lining of the improved stove was 283°C while temperature on the lining of the traditional stove was 266°C. The improved stove has double lining while the traditional stove has only one lining.

DISCUSSION AND CONCLUSION

The improved metal stove is aimed primarily at the urban community where charcoal is a more popular fuel. The objective is to reduce charcoal consumption and save cooking time. The traditional metal charcoal stove is inefficient primarily due to low thermal insulation properties. Heat from the hot gases is lost through the

stove lining by conduction and the radiant heat generated by the hot charcoal mixes with the ambient temperature before contacting the cooking surface. The traditional stoves do not maximize combustion efficiency. For an ideal combustion condition, the amount of air entering the combustion chamber or fire box must be just sufficient to allow complete combustion of the fuel. Too much air, in the case of the traditional stove, means that the excess air carries heat away from the pot which sits on the stove and therefore is wasted. The main attractions of the improved stove are many. The stove is compact and robust, therefore ideal for cooking traditional meals. It has a superior thermo-insulation properties offered by a layer of air between the two linings which forms the double protecting jackets of the stove. The movable stove cover facilitates easy refilling of a desired insulating material. Hot air from the burning charcoal is funneled by the performated cone to the cooking surface which sits deeper in the stove. Heat exchange between hot gases and cooking surface takes place in the stove as the hot gases circulate around the pot when it escapes.

The improved stove consumes charcoal at the rate of 225 gms in 30 minutes compared to 373 gms, by the traditional stove during the same period. The traditional stove, therefore, consumes 66% more charcoal than the improved stove for the same cooking time. It takes about half the time to boil the same volume of water with the improved stove. There is, therefore, a considerable time served to boil an equal volume of water with the improved stove compared to the traditional stove.

The wood fuel shortage must be attacked in several fronts simultaneously to meet the growing energy and ecological crisis. Wood resources must be conserved through a comprehensive reforestation program, well managed village wood-lots and a better cooking system based on efficient

wood and charcoal utilization. The demand for wood fuel can be reduced considerably by efficient methods of energy conversion and utilization. Therefore it is important to design and put into use stoves that are efficient, inexpensive, culturally acceptable, easy to operate and to construct. The introduction of the improved metal charcoal stove would be an overal saving of woodfuel and housewives will have less cooking time while at the same time children will be protected from frequent burns. Last, but not least, more research should be directed to further improvement of the stove.

APPENDIX

Appendix A

CHARCOAL STOVE

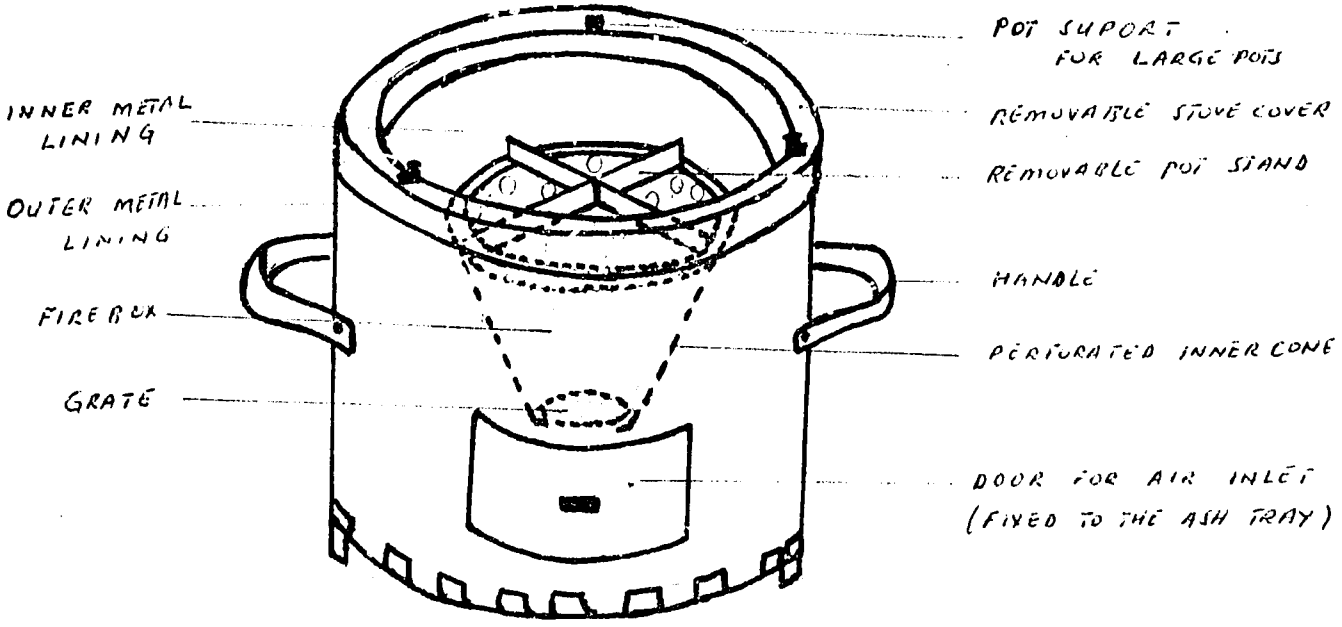

FIG. 1a MODIFIED METAL CHARCOAL STOVE "IMPROVED SIGIRI"

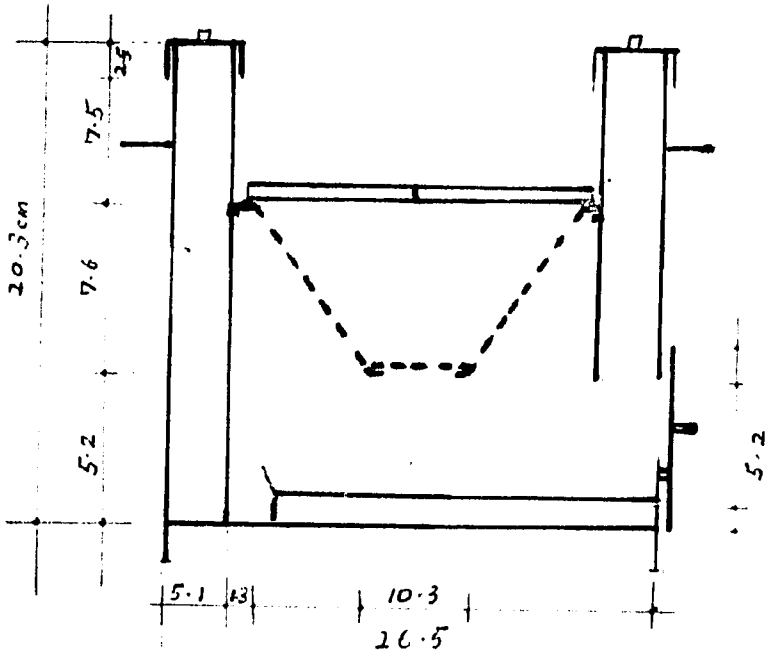

FIG. 1b FRONT ELEVETION

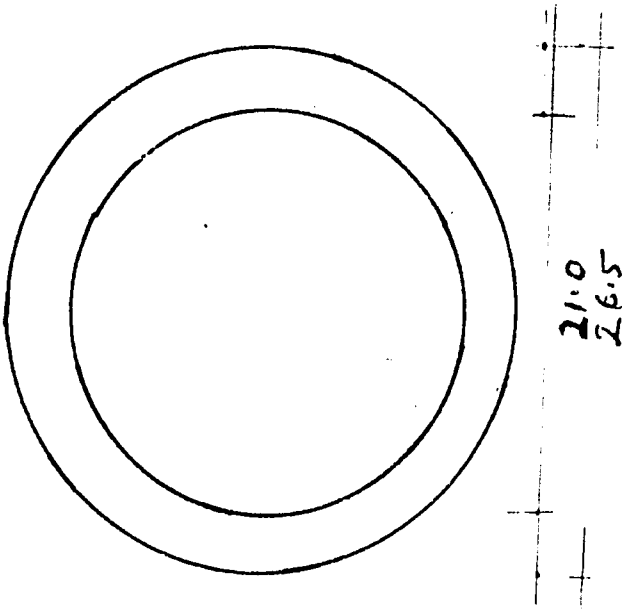

FIG. 1c PLAN

Appendix B

CHARCOAL STOVE

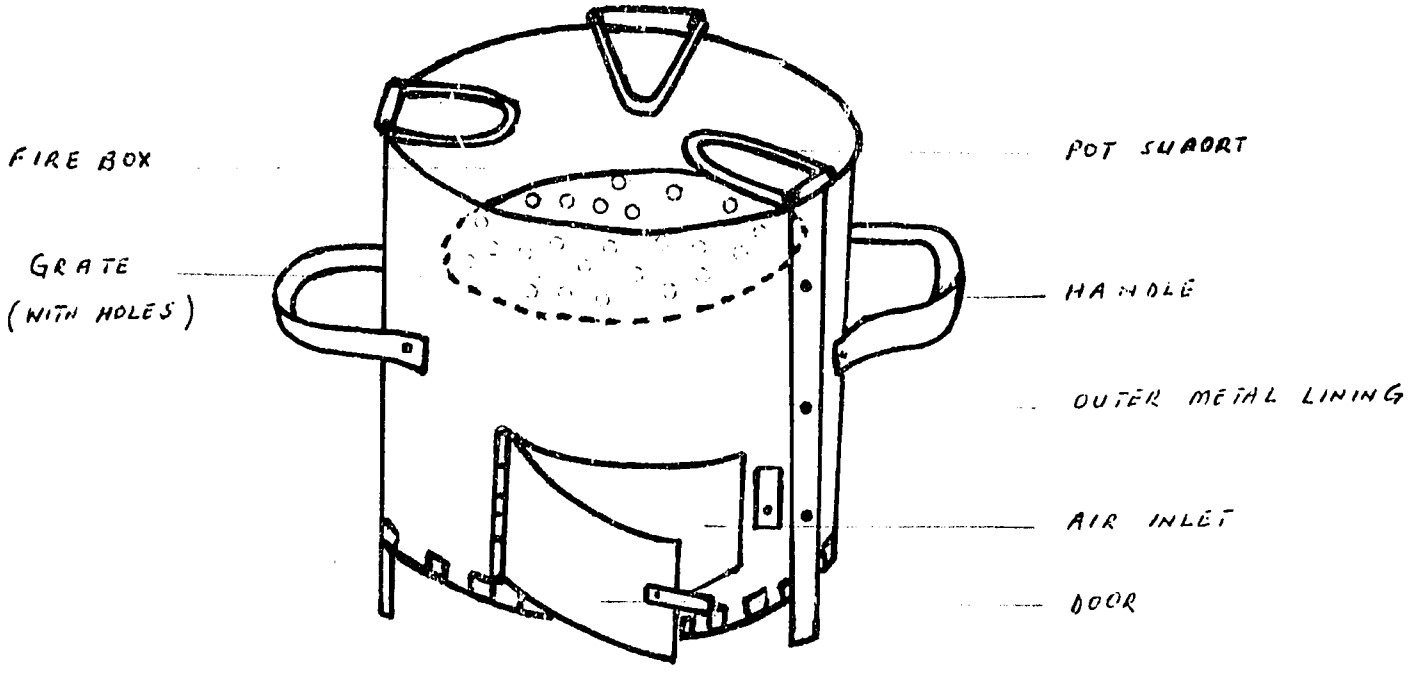

FIG.2a METAL CHARCOAL STOVE "SIGIRI"

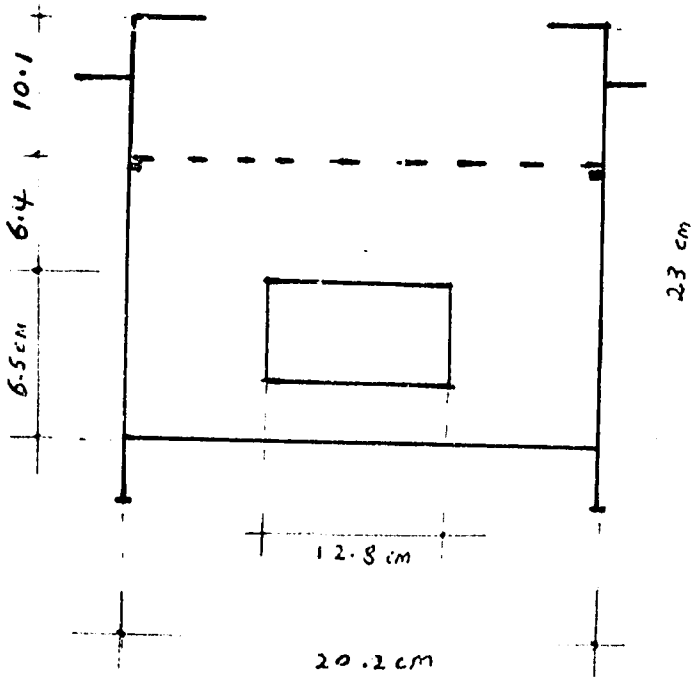

FIG.2b FRONT ELEVETION
METAL CHARCOAL STOVE "SIGIRI"

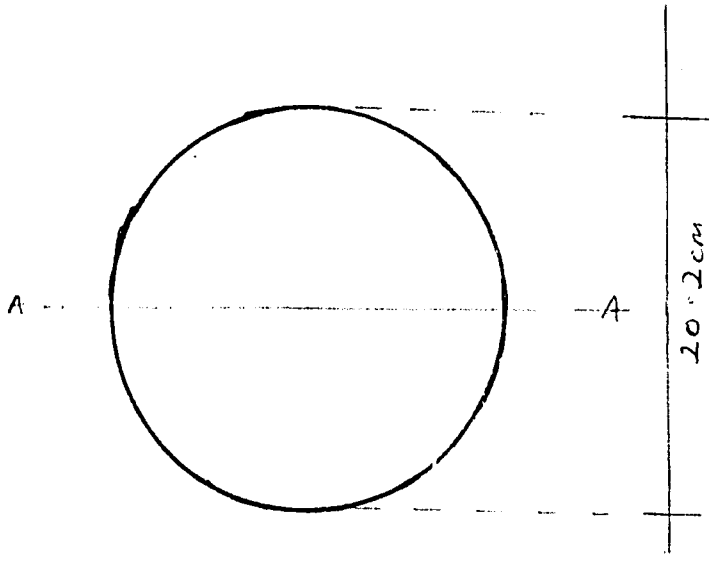

FIG.2c PLAN

METAL CHARCOAL STOVE
"SIGIRI"

Appendix C

FIG. I COMPARISON OF CHARCOAL STOVES

- TIME TO BOIL 1 LT. OF WATER
- Wt. of charcoal used:
  225 gm. Improved stove
  225 gm. Traditional stove
- Temperature at cooking surface

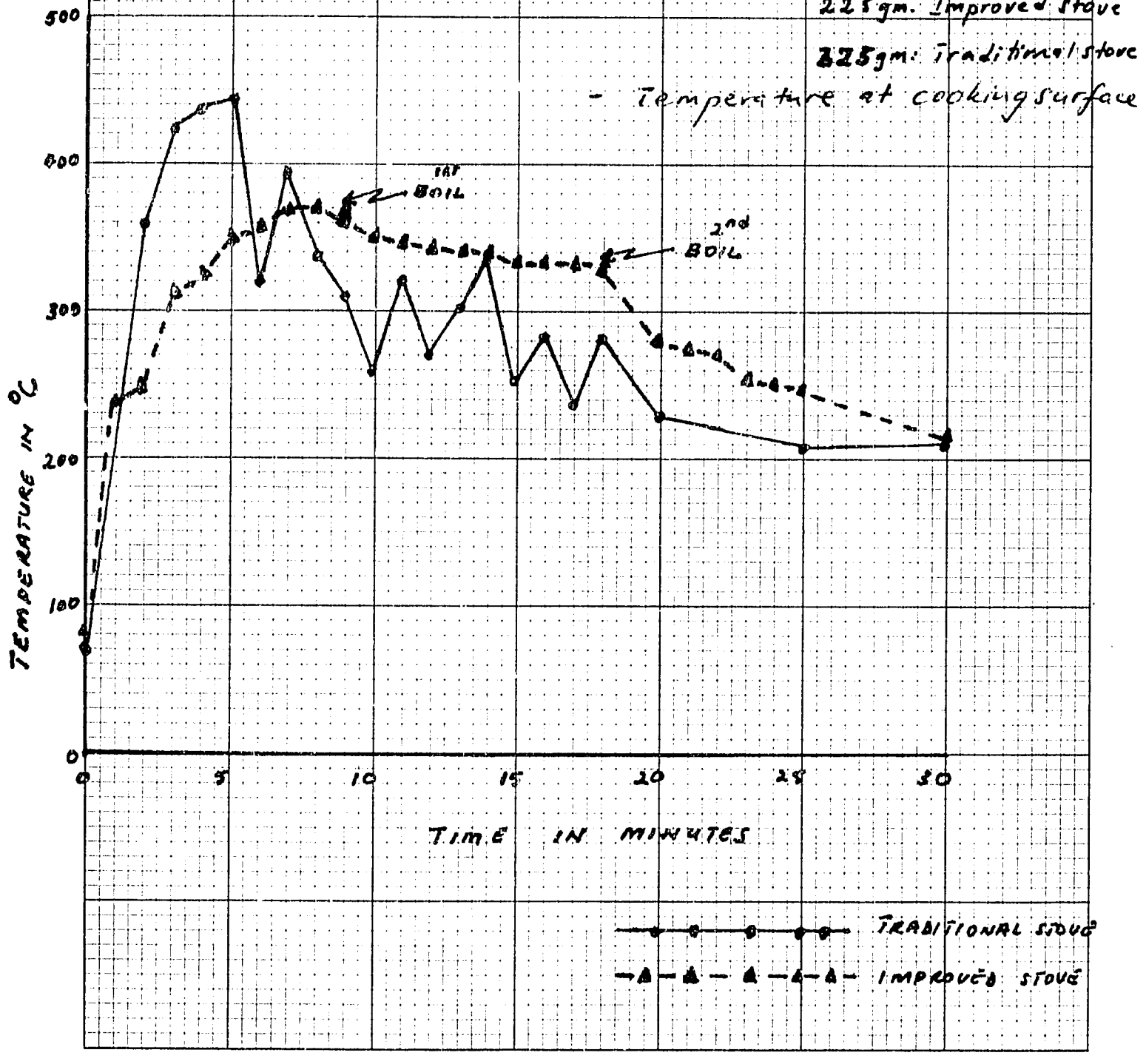

CITADEL® NO. 542 - CROSS SECTION - 10 SQUARES TO INCH

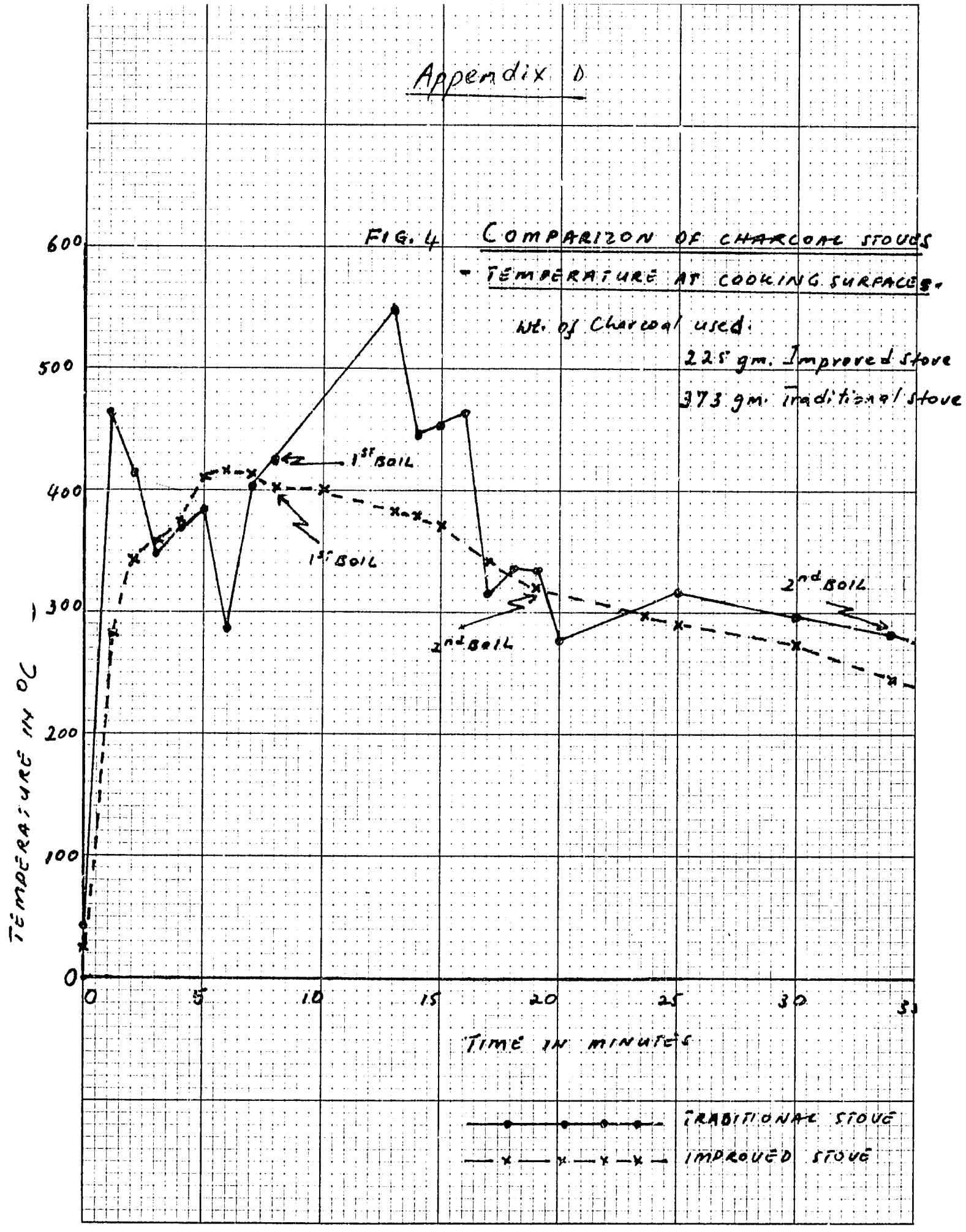

CITADEL® NO. 642 - CROSS SECTION - 10 SQUARES TO INCH

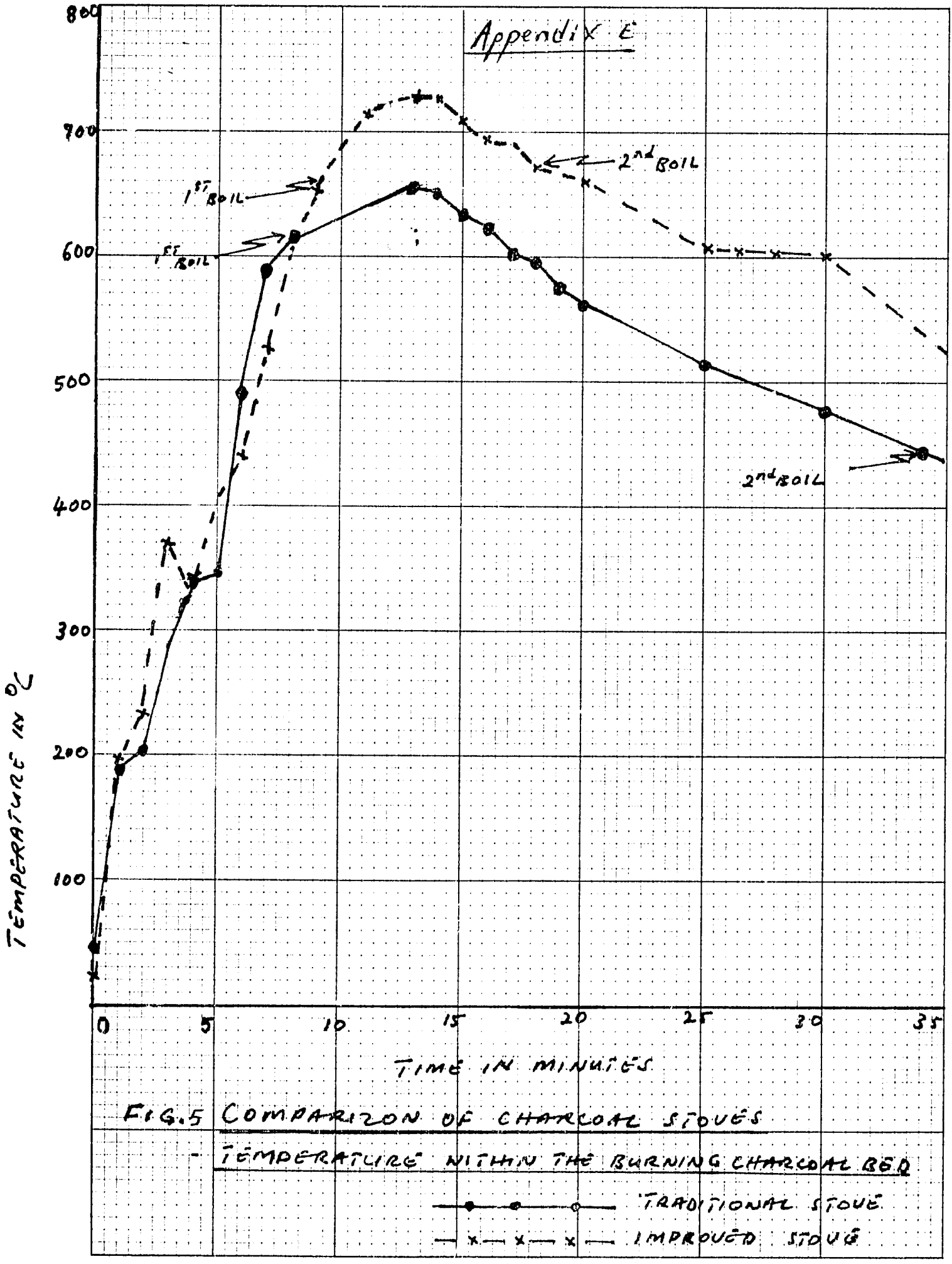

FIG.5 COMPARIZON OF CHARCOAL STOVES
- TEMPERATURE WITHIN THE BURNING CHARCOAL BED

CITADEL, NO. 642 - CROSS SECTION - 10 SQUARES TO INCH

Appendix 4

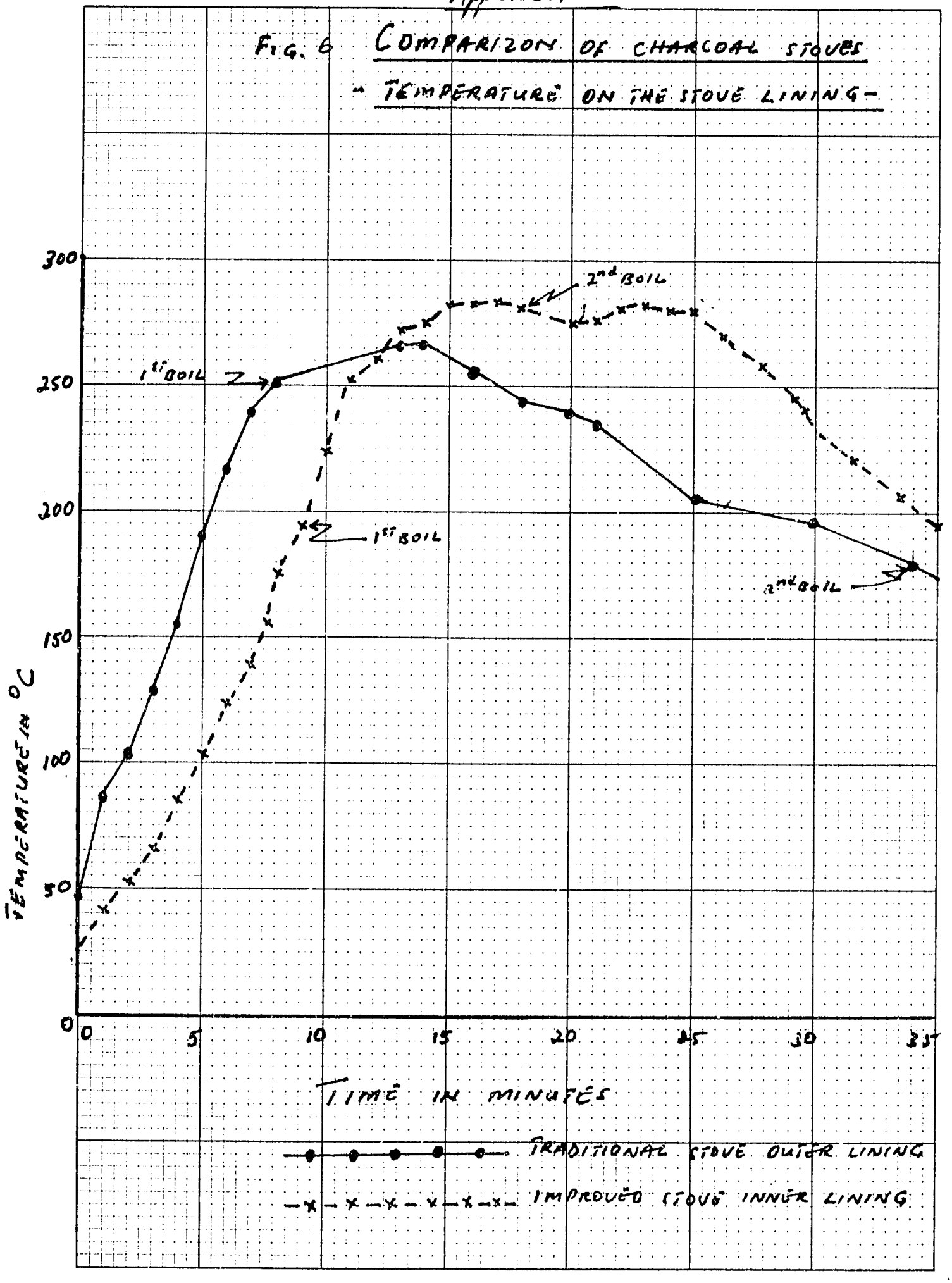

CITADEL, NO 642 - CROSS SECTION - 10 SQUARES TO INCH

Appendix G

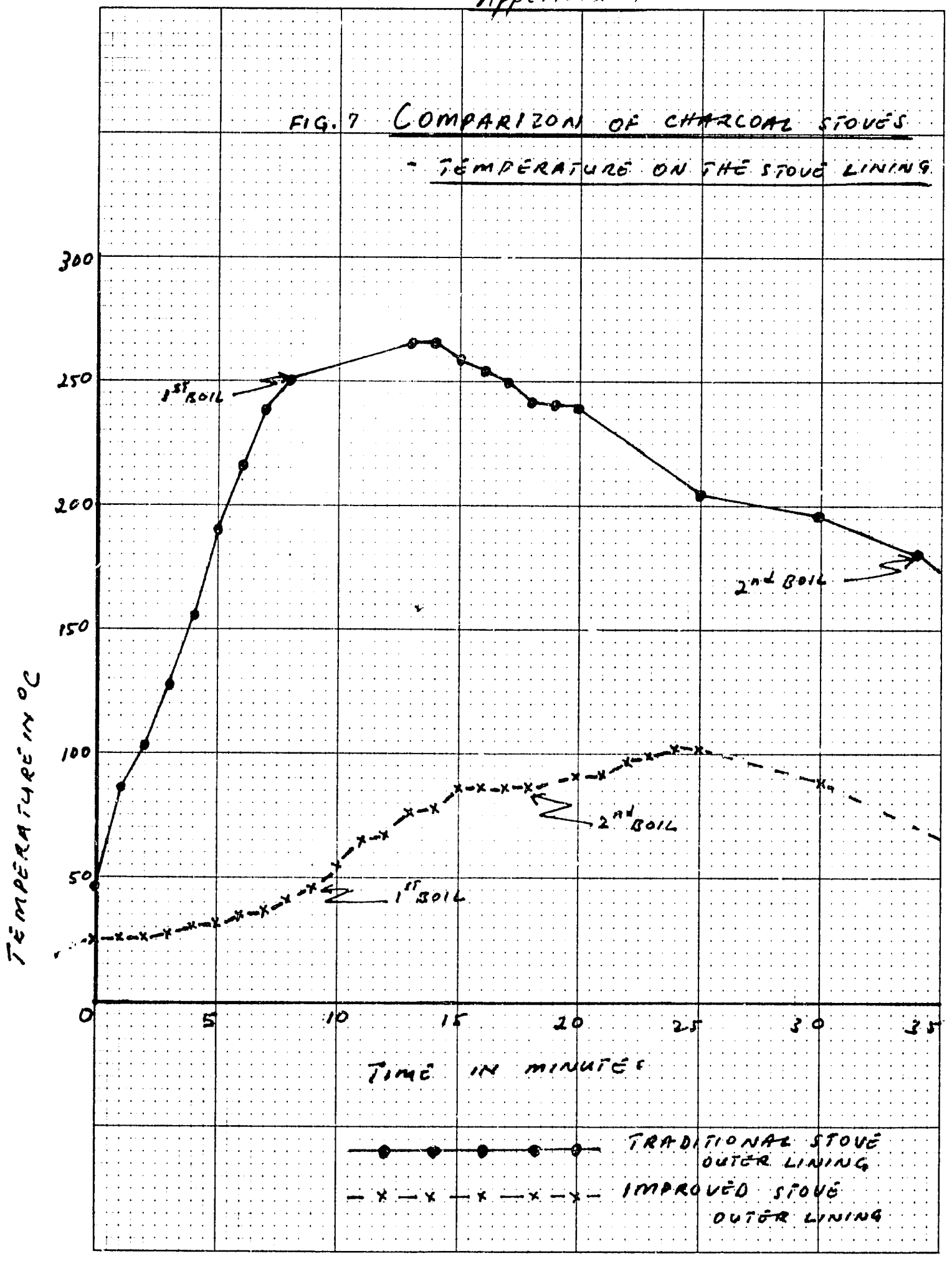

CITADEL, NO 642 - CROSS SECTION - 10 SQUARES TO INCH

Appendix H-1

Experiment 1

Table 3 Temperature and time record for the improved stove

Time in minutes from the start	Temp. on the outer lining	Temp. on the inner lining	Temp on the on fire grate	Temp. in °C cooking surface
1	-	-	-	261°C
2	-	-	-	344
3	-	-	-	359
4	-	-	-	374
5	-	-	-	412
6	-	-	-	416
7	-	-	-	414
8	-	-	-	401
9	-	-	647	-
10	-	-	676	400
11	-	-	-	-
12	72	204	-	-
13	-	-	663	-
14	45	217	-	-
15	42	-	-	371
16	81	216	611	-
17	-	-	600	342
18	-	-	-	-
19	-	-	-	320
20	-	-	554	-
25	79	198	497	291
30	74	174	451	274
45	60	111	381	216
60	57	72	263	161
75	48	82	195	125

Table 4 Temperature and time record for the improved stove

Time in minutes from the start	Temp. on the outer lining	Temp. on the inner lining	Temp in °C on the grate	Temp. in °C on cooking surface
1	24	41	198	235
2	26	53	282	250
3	27	67	371	310
4	32	85	336	323
5	33	103	401	348
6	35	124	439	352
7	36	139	526	318
8	43	176	7-3	370
9	46	194	653	360
10	-	-	-	-
11	67	252	714	349
12	68	261	722	343
13	77	273	726	341
14	89	285	726	339
15	86	283	709	335
16	87	283	693	336
17	87	283	693	335
18	87	281	672	328
19	-	-	-	-
20	91	275	661	278
21	91	276	648	277
22	97	281	641	274
23	99	282	616	254
24	103	280	614	253
25	103	280	608	249
30	88	232	602	216
45	71	178	479	185
60	28	29	31	283

Appendix H-3 Experiment 3

Table 5 Temperature and time record for the traditional stove

Time in minutes from the start	Temp. in °C on outer lining	Temp. in °C on the grate	Temp. in °C cooking surface
1	73	484	709
2	97	543	524
3	109	561	520
4	168	564	362
5	124	549	350
6	130	539	251
7	132	533	230
8	137	528	217
9	138	509	263
10	141	510	359
11	143	509	355
12	143	504	283
13	144	408	389
14	144	496	436
15	144	483	462
16	143	473	379
17	139	466	372
18	136	454	376
19	136	450	417
20	136	449	480
25	108	414	163
30	133	413	159
60	109	267	133

Appendix H-4 Experiment 4

Table 6 Temperature and time record for the traditional stove

Time in minutes from the start	Temp. in °C on outer lining	Temp. in °C on the grate	Temp. in °C cooking surface
1	88	472	-
2	108	586	358
3	125	576	425
4	147	572	439
5	159	540	443
6	175	533	320
7	185	536	398
8	187	539	334
9	199	534	311
10	201	505	263
11	202	497	323
12	197	494	273
13	104	401	301
14	193	491	337
15	194	486	255
16	198	463	284
17	201	453	239
18	194	437	284
19	192	422	458
20	182	405	230
25	157	403	210
30	130	449	217
60	54	41	32

* no boil was recorded in this trial when 225 gm of charcoal was burned

Appendix H-5 Experiment 5

Table 7 Temperature and time record for the traditional stove

Time in minutes from the start	Temp. in °C on outer lining	Temp. in °C on the grate	Temp. in °C cooking surface
1	84	188	456
2	103	203	416
3	127	288	348
4	155	338	370
5	190	346	484
6	217	490	284
7	239	591	403
8	251	612	421
13	275	757	551
14	266	653	448
15	258	632	454
16	254	627	463
17	251	602	314
18	243	597	347
19	242	576	335
20	240	563	279
25	204	516	318
30	197	479	299
34	180	447	282
45	109	274	136

REFERENCES

1. Dhammika, de Silva, "A charcoal stove from Sri Lanka" 1981

2. Openshow, K., "A comparison of metal and clay charcoal cooking stoves" 1980

3. Philip, H., "Umeme: A charcoal stove from Kenya" UNICEF's East Africa Regional Office, Nairobi, Kenya 1982

4. Bartok, J.W., Jr., "Heating with coal" 1980

5. Openshow, K., "The Energy Problems and Requirements of Dodoma Region" 1977

6. J. Stephen, et al "Compendium of tested stove designs" 1980

7. Nkonoki, S.R., "Renewable Energy Research, Development and Planning in Tanzania" 1980

8. Nigel, S., "Wood: An ancient fuel with a new future" 1981