1270
6603

PN-AAW-080 21

Conversion of Solar Energy into Mechanical and Electrical Energy by Using a V-2 Vapor-Cycle Engine

TRAINING IN ALTERNATIVE ENERGY
TECHNOLOGIES
SOLAR ENERGY LAB.
UNIVERSITY OF FLORIDA

by

Gatwaza Emmanuel
National University of Rwanda
Department of Physics
Butare, Rwanda

Training in Alternative Energy Technologies Program
Fourth Session, December 1981
University of Florida
Gainesville, Fl. USA

Submitted to the TAET program, fourth session, TREEO Center, University of Florida, December 1981.

Sponsored by the United States Agency for International Development (USAID).

Acknowledgements

I would like to thank Dr. Erich A. Farber for his advice and explanations during the conduction of this work.

Thanks to the entire TAET program for their assistance during this fourth session.

Finally I thank USAID for sponsoring the TAET program.

Table of Contents

Sections		Page
I.	Introduction	1
II.	Description of Solar Power System	2
III.	Theoretical Cycles	4
IV.	Selection of Fluid	13
V.	Experimental Evaluation of the Engine	14
VI.	Design of Solar Power System	20
VII.	Conclusion	24

I. Introduction

In developing countries, in view of reducing their dependence on oil, there is a need for development and utilization of new power sources. This need may be fulfilled by a solar power system, as described in this report.

The system consists of four components: a solar powered vapor generator, a V-2 vapor cycle engine, a condenser, an electrical generator and a pump.

The operation of the system is based on the ideal superheated Rankine Cycle and trichloromono-fluoromethane was chosen as the working fluid.

II. Description of the Solar Power System

The solar power system consists of five major components: vapor generator, power plant, electrical generator, condenser and pump.

These elements are connected as shown in Figure 1 to convert solar energy into mechanical energy and into electricity.

This low temperature solar power system is composed of flat plate collectors which convert solar energy into heat, producing temperatures up to 80°C and can, if the right fluid is used, produce vapor.

The vapor is then allowed to flow to an engine, the V-2 vapor engine in this case, where this energy is converted into mechanical power. This mechanical energy can be used to run a generator for producing electricity.

From the engine, the vapor moves to a condenser where it is changed back to liquid. A small circulating pump brings the liquid back to the flat plate collectors.

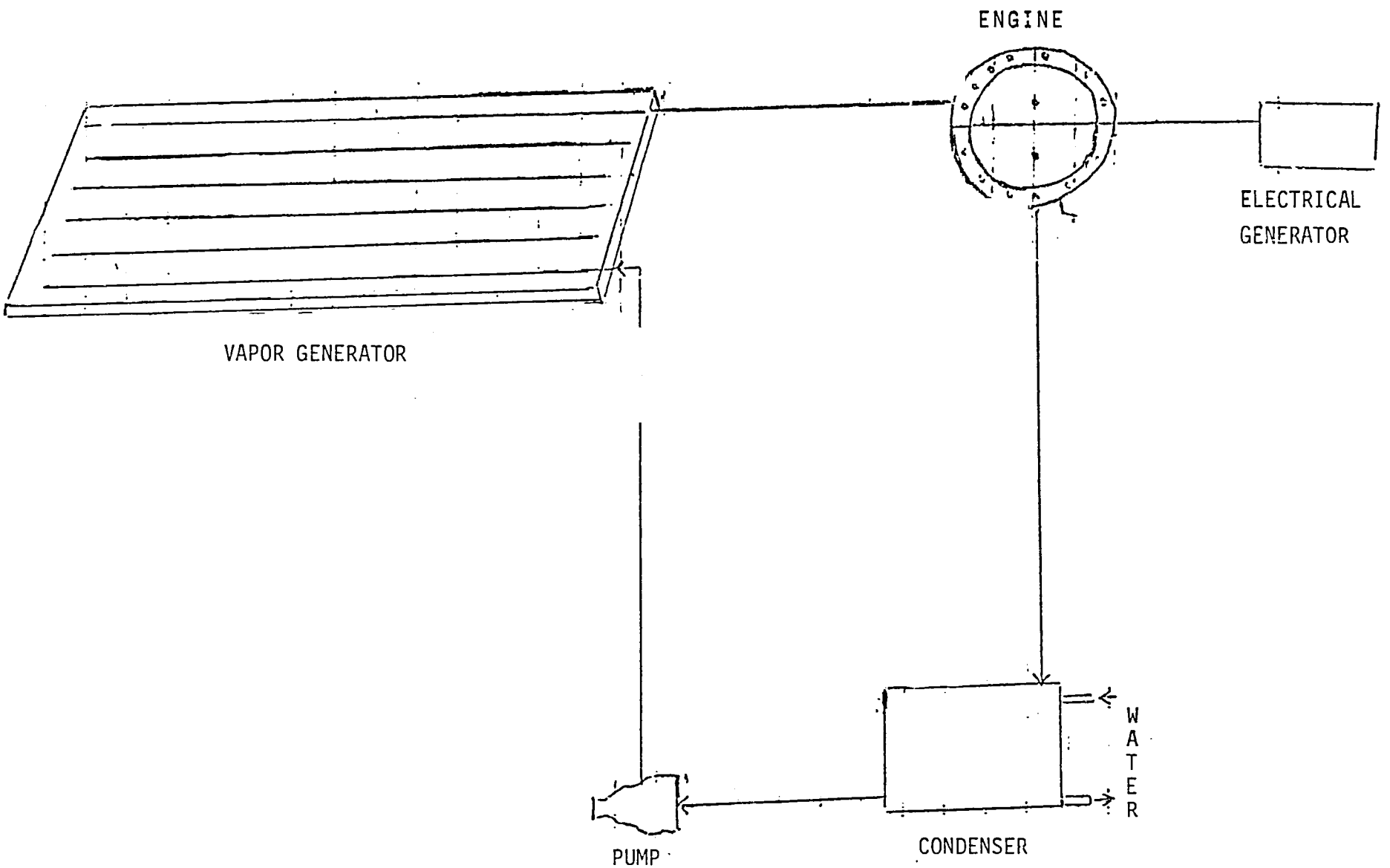

FIGURE 1. PICTORIAL REPRESENTATION OF SOLAR POWER SYSTEM

III. Theoretical Cycles

Idealized cycles can be used to describe the operation of the system. The consideration of these cycles gives a better understanding of the system and provides a basis for evaluating the theoretically expected performance of the system for comparison with experimentally determined data.

Theoretical Cycle of the System

The theoretical cycle for the operation of the solar power is the Superheated Rankine Cycle.

A temperature-entropy diagram of the theoretical cycle is shown below:

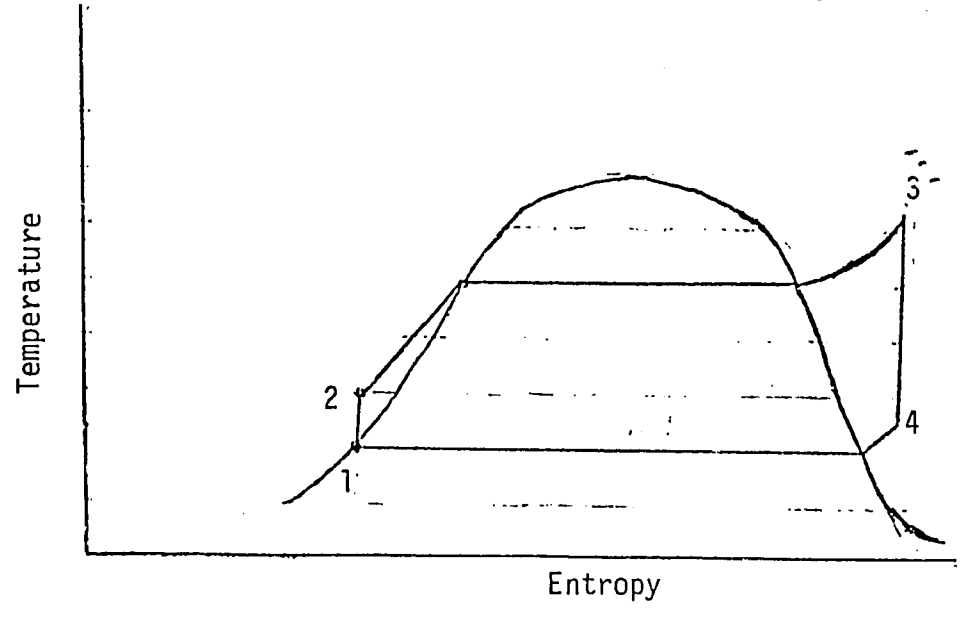

Figure 2 T-S diagram of system cycle

Beginning at point 1, the working fluid goes into the pump as a saturated liquid. It is compressed isentropically to a subcooled liquid condition at state 2 and enters the vapor generator. In the generator 2, the fluid is heated at constant pressure to a superheated condition at state 3. It is then introduced into the engine, where it expands isentropically

to state 4. The vapor is then condensed to a saturated liquid in the condenser, completing the cycle.

For the quantitative evaluation of the theoretical cycle, one must select a working fluid and establish certain criteria for operation of the cycle. These criteria must be selected from experimental work and from limitations established for the components of the system.

The use of water at approximately 72°F for cooling in the condenser makes the minimum temperature which can practically be expected in the condenser 80°F. Also a reasonable maximum vapor temperature that can be attained with solar flat plate collectors is about 160°F. We will suppose that the vapor temperature is 140°F or 160°F. And from experimental evaluation of the engine it was discovered that the optimum pressure for operation of the engine is about 35 psig using compressed air.

In short the criteria are:

(1) condenser temperature of 80°F

(2) vapor temperature of 140°F in vapor generator

(3) pressure rise of about 35 psig in the pump.

After basic design criteria is established, it is possible to examine a theoretical cycle operating on a particular fluid.

Example: Theoretical Cycle of R-11

If we consider the design criteria and apply to the Refrigerant 11 as working fluid, the cycle can be represented on a P-H diagram in Figure 3. From ASHRAE Handbook of Fundamentals 1967, p. 286, we can get the following results: For R-11

Temperature (°F)	Pressure (PSIA)	Enthalpy (Btu/lb)	Entropy Btu/lb (°R)
80	16.233	24.527	0.051309
140	45.123	108.535	0.19242

And the P-H diagram is:

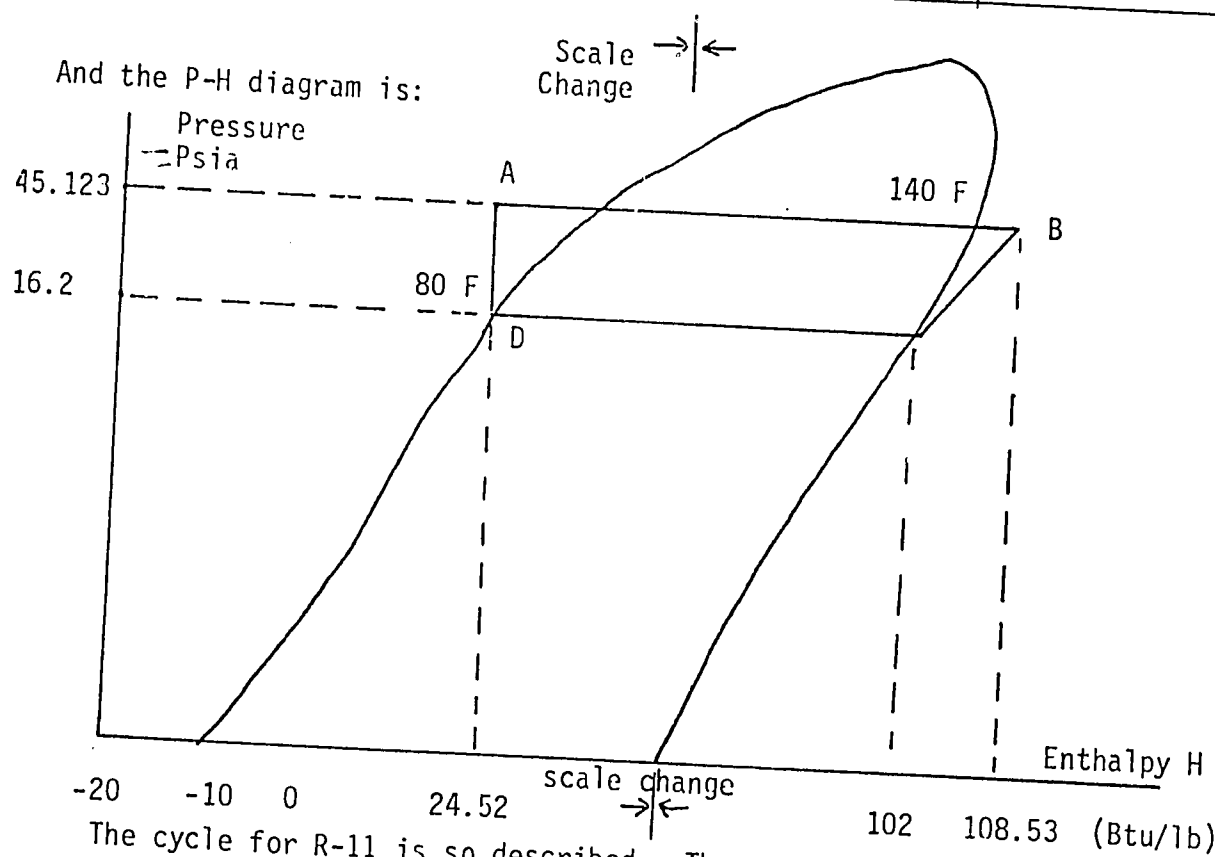

The cycle for R-11 is so described. The condensing pressure at 80°F is 16.2 psia and state C falls on saturated liquid at an enthalpy of 24.52 Btu/lb. The process from D to A is an isentropic compression of the liquid to a compressed liquid state at 45.1 psia and the same values of temperature and enthalpy.

At point B, the fluid is a superheated vapor at 140°F with an enthalpy of 108.5 Btu/lb. After the isentropic expansion to state C, the enthalpy is 102 Btu/lb.

Thus the following calculations can be made:

If W = work

$$\Delta W_{output} = H_D - H_C = 6.5 \text{ Btu/lb}$$

$$\text{Heat input} = (108.5 - 24.5) \text{ Btu/lb} = 84 \text{ Btu/lb}$$

$$\eta_{thermal} = \frac{\text{net work output}}{\text{heat input}} = \frac{6.5}{84} \simeq 7\%$$

The thermal efficiency of this theoretical cycle is 7%.

If the temperature in the generator is 160°F, $\eta_{thermal}$ = 9.6%.

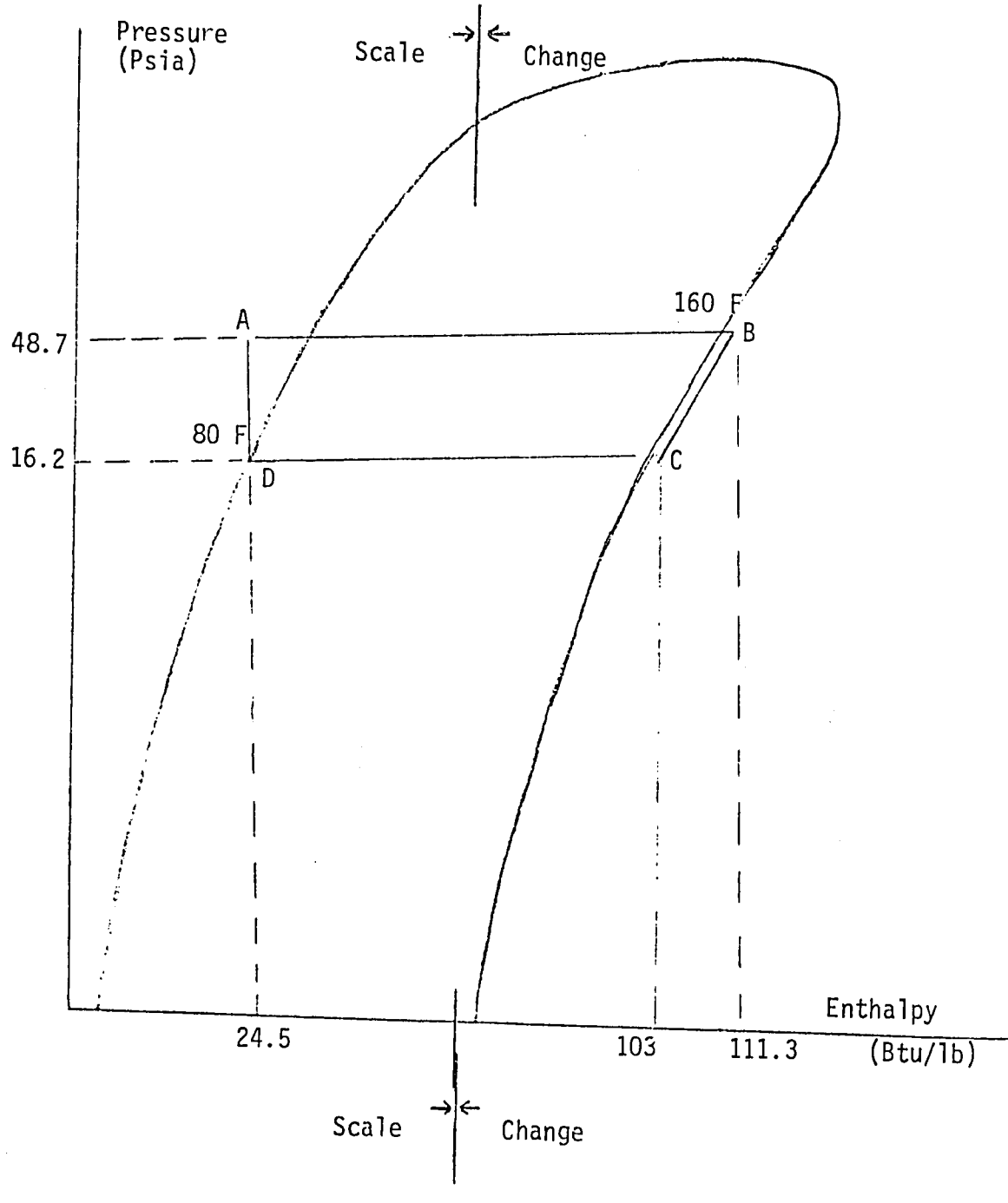

Figure 3'. P-H Diagram For R-11

Theoretical Analysis of the Engine Cycle

The theoretical cycle of the V-2 vapor cycle engine is represented on a pressure-volume diagram in figure 4. The solid line identifies the cycle operating on air and the broken line describes operation with R-11 as the working fluid. Following the solid line, the cycle for air begins with the opening of the intake part at point F. Air at constant pressure flows into the engine driving the power piston back. The intake valve closes at point B, and an isentropic expansion occurs at point C', where the exhaust valve opens and the pressure drops to the exhaust pressure. A constant pressure exhaust stroke from C to D takes place, and the cycle is completed by an isentropic compression of the vapor remaining in the cylinder at the end of the exhaust back to the initial pressure and volume. The cycle is similar for R-11.

Determination of Engine Volumes

A factor which has considerable effect on the results of the theoretical evaluation of the engine cycle is the determination of the engine volumes. This is done by relating the diagram of valve opening and closing to the position of the piston within the power cylinder.

The power piston leads the valve piston by 45°; therefore a 45° rotation of the valve diagram makes it possible to determine the position of the piston within the power cylinder at the time of valve opening and closing, and subsequently calculate the engine volumes.

The clearance volume of a cylinder is about 0.298 cubic inches and the valve opens for intake 0.0625 inches from the top of its stroke, which yields a volume at point A of 0.496 cubic inches. But this volume is not equal to the volume calculated by an isentropic compression of air from

point D to point A of 0.591 C·i. This difference is due to errors in measuring the piston position. In calculating theoretical performance it will be supposed that the cylinder volume at point A is 0.591 C·i.

Calculation of Theoretical Work

Considering the theoretical cycles of V-2 vapor cycle engine (fig. 4) and the following results:

a) The work for a constant pressure process from A to B is:

$$W_{A-B} = P_B(V_B - V_A)$$

b) For an isentropic process of a perfect gas with constant specific heats: PV^k = constant, we can calculate the theoretical work of the engine.

-Operating on air

In this way we can write if we assume that P_B = 49.7 psia and P_C = 14.7 psia

$$W_{A-B} = P_B(V_B - V_A)$$

$$= (49.7)(2.607 - 0.591) = 100.1952 \text{ in-lb}$$

$$= 8.349 \text{ ft-lb}$$

$$W_{C-D} = P_C(-V_C + V_D)$$

$$= 14.7(-4.635 + 1.400) = -3.96 \text{ ft-lb}$$

$$W_{D-A} = (P_A V_A - P_D V_D)\frac{1}{1-k} = -1.83 \text{ ft-lb}$$

$$W_{B-C'} = \frac{1}{1-k}(P_C' V_C' - P_B V_B) = 5.77 \text{ ft-lb}$$

Note: $P_B V_B^k = P_{C'} V_{C'}^k$

$$49.7\ (2.607)^k = P_{C'}\ (4.635)^k\ ,\ k = 1.4$$

$$\Longrightarrow P_{C'} = 22.2 \text{ psia}$$

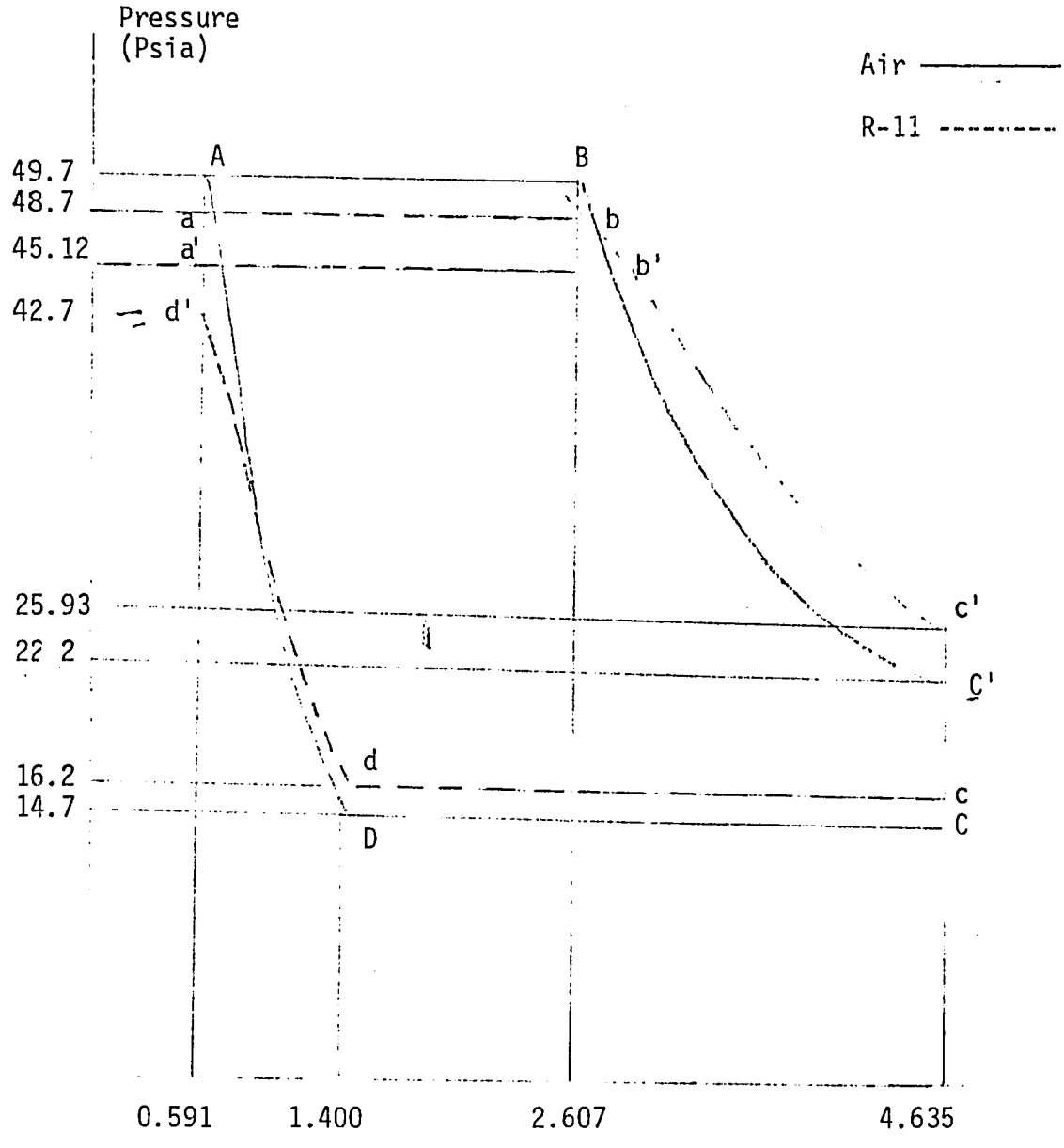

Figure 4. Theoretical Cycles of V-2 Vapor Cycle Engine

Totalling these results, the network per cycle operating on compressed air is: 8.32 ft-lb for each cylinder.

Operating on R-11

In the same manner to the analysis with air, the similar calculations can be made for R-11 as the working fluid.

Looking at fig. 4, we can see that:

$\Rightarrow P_{B'} = 45.7$ psia, $P_C^1 = 25.93$ psia, $P_C = 16.2$ psia

Calculating the work for each process:

$W_{A-B} = 8.18$ ft-lb

$W_{B-C'} = 5.82$ ft-lb

$W_{C-D} = -4.36$ ft-lb

$W_{D-D'} = -1.63$ ft-lb

Therefore the network per cycle is 8.37 ft-lb for operation on R-11 with the specified pressures.

We can estimate the amount of fluid M passing through each cylinder per revolution engine by using the ideal gas law:

$$PV = NRT \Longrightarrow M = \frac{PM}{RT}(V_B - V_A)$$

$T = 160°F$

$P = 48.7$ psia molecular weight for R-11 = 137.5 lb/mole

$\Longrightarrow M = 0.0017$ lbs per cycle

The mass of fluid is 0.0017 lbs per cycle.

IV. Selection of a Fluid

Considering the thermodynamic properties of the fluid and other factors such as: cost, chemical properties, reactions with materials and safety must be taken into account for choosing the working fluid.

Thermodynamically a fluid must be chosen which will operate well within the limits of the design criteria of the system: temperature, pressure, ...

The fluid that seems to be most practical is R-11, trichloromonofluoromethane. It facilitates operation at a low positive gauge pressure and it produces a reasonable amount of work output per cycle.

V. Experimental Evaluation of the Engine

a) Description of the V-2 Engine

The engine is 10 inches tall, 13.5 inches wide and 9 inches in depth. It is secured within the housing by 2 plates welded vertically onto the bottom of the housing with 2 bolts passing through them.

The base of the engine consists of a pair of steel plates of 1/4 inch thickness. The rear plate provides support for the majority of the engine parts. To the rear of this plate are mounted the power cylinders, which set at a 90° angle to one another. On the front of this plate are mounted the valves, which control the flow of vapor into and out of the power cylinders.

The vapor inlet main connects to the engine governor, then to the valve cylinders through copper tubing.

At the middle of the crankshaft, located just behind the front base plate, is a 6 inch diameter flywheel.

Each power cylinder contains a double-acting piston, meaning that both the upward and downward strokes of the pistons are power strokes. The pistons are connected to the crankshaft in such a manner that they are 90° out of phase, so that there is always a piston in position to supply a power stroke, no matter what the degree of crankshaft rotation. This accounts for the self-starting nature of the engine.

The power cylinders are 2.012 inches in diameter, and the pistons 1.992 inches in diameter, giving a clearance of 0.01 inch. The pistons have a stroke of 1.50 inches, resulting in a total engine displacement of 18.54 cubic inches per revolution.

The valve cylinders are connected to the power cylinders by valve ports

drilled through the engine frame. There are three ports for each half of a cylinder, and they act both as intake and exhaust ports. The valves are 5/8 inch in diameter and have a stroke of 3/4 inch. The valve ports are located to allow vapor inlet for 95° of flywheel rotation and exhaust for 140°. A cross-section of engine and valve assembly and valve opening diagram are shown in Appendixes A and B.

b) Experimental Theory

For determining the engine performance, it is necessary to measure its torque and power output. These measures are made by using a prony-brake dynamometer which has been built.

Torque is a measure of the ability of an engine to do work, while power is a measure of the rate at which work is done. The torque produced by an engine is simply the product of the resisting force against which the engine operates and the distance at which the force is applied.

On a dynamometer, the torque produced by the friction of the braking surface on the drive shaft can be balanced by a force applied on the arm of the dynamometer at a measured distance.

The work produced by an engine is the product of the resisting force and the distance through which it acts. Power is defined as the rate of doing work, so the work per revolution can be multiplied by the engine speed to give the power output.

The equation for determining horsepower when torque is measured in foot-pounds and engine speed in rpm is:

$$HP = \frac{2\pi TN}{33,000}$$

where T : Torque (ft-lb)

N : Speed (rpm)

c) Determination of Engine Performance

A prony-brake bynamometer was constructed and the engine was tested using compressed air. The results of these tests are tabulated below. A schematic of the prony-brake dynamometer is shown in Appendix C.

Table 1 Experimental Data on Engine Performance

Pressure (PSIG)	Engine Speed (RPM)	Torque (Inch-Lbs)	Power Output (Horsepower)
10	85	48.16	0.094
10	76	21.4	0.038
10	54	42.8	0.054
10	171	11.4	0.047
10	163	10.7	.04
10	164	9	.033
10	153	10.7	.037
10	158	9.51	.034
10	166	8.64	.048
10	245	6.65	.037
10	260	2.66	.027
15	166	8.025	.052
15	80	22.2	.040
15	143	18.2	.059
15	235	6.018	.032
15	130	10.3	.037
15	155	11.1	.036
15	165	16.5	.062
15	163	17	.06
15	170	12	.046
10	90	14.7	.031
10	107	14.43	.035
10	160	8	.022
20	208	16.74	.055
20	177	8.25	0.035
20	124	17.83	0.050
20	305	0	0
20	325	2.40	0.018
20	216	16.49	.056
25	148	24.74	.058
25	188	25.24	.075
25	225	21.7	.09
25	300	18.49	.088
25	308	18.49	.090
25	648	0	0
30	268	29.74	.126
30	288	27.24	.124
30	292	27.24	.124
30	324	23.24	.126
30	360	25.74	.147
30	380	24.74	.149
30	408	21.04	.136
30	428	20.44	.139
30	448	18.74	.133
35	512	22.74	.185
35	524	20.64	.171
35	560	14.24	.126
35	576	17.99	.164
35	608	14.99	.144
35	612	14.24	.138
35	776	0	0

FIGURE 5

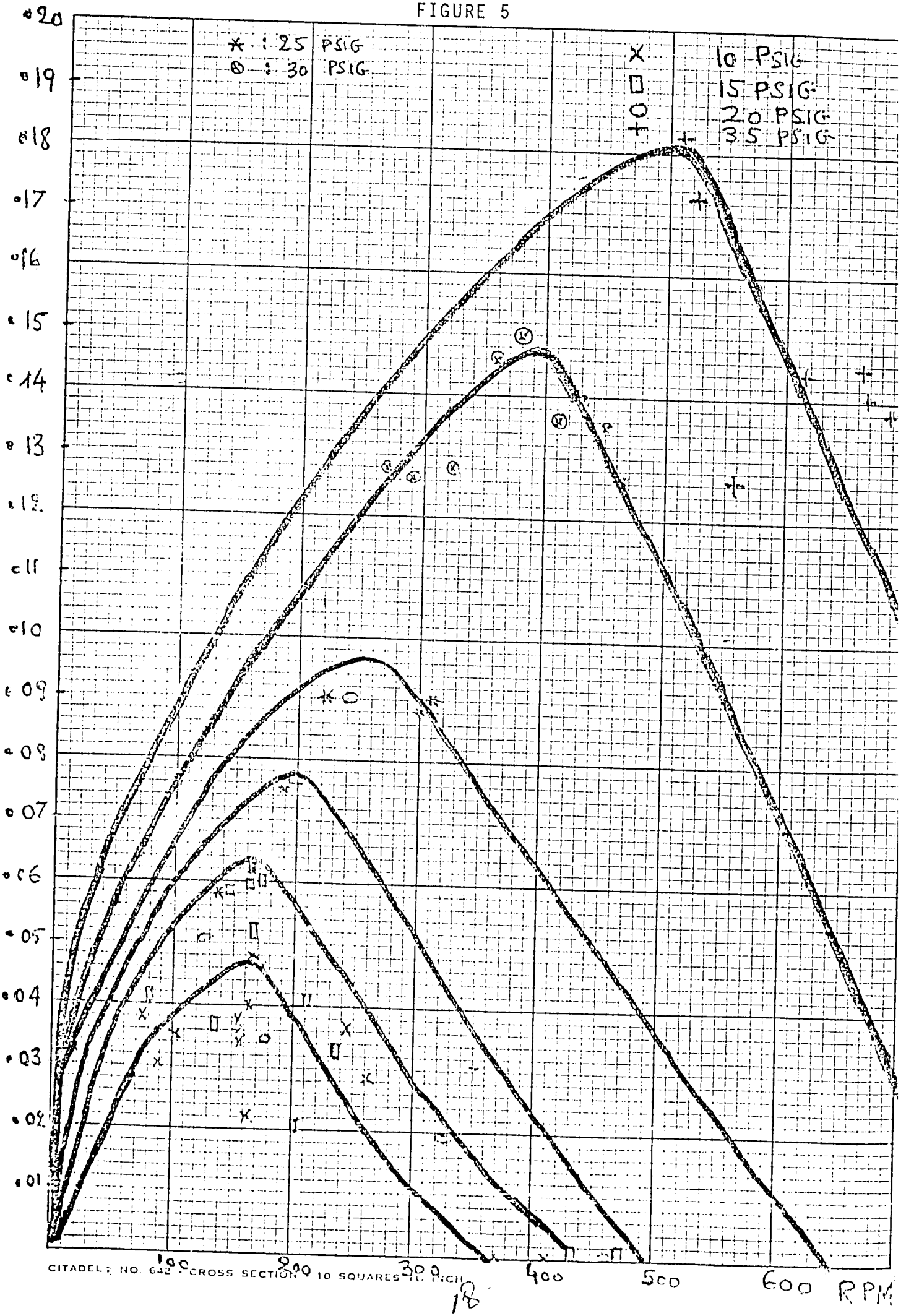
* : 25 PSIG
⊗ : 30 PSIG
X 10 PSIG
□ 15 PSIG
O 20 PSIG
+ 35 PSIG
.20
.19
.18
.17
.16
.15
.14
.13
.12
.11
.10
.09
.08
.07
.06
.05
.04
.03
.02
.01
100
200
300
400
500
600 RPM
CITADEL NO. 642 - CROSS SECTION 10 SQUARES TO INCH

Discussion of Experimental Results

The results of the performance tests on the V-2 vapor-cycle engine in Table 1 are plotted in Figure 5. Curves for horsepower versus engine speed in rpm are drawn for 6 values of inlet pressure. We can notice that these 6 curves all have the parabolical shape, and are characterized by a certain engine speed at which the power output is maximized.

The family of these curves shows that power coutput increases as inlet pressure is increased. The engine spped at which maximum power output takes place increases with increasing pressure, occurring at 165 rpm for 10 psig, 166 rpm for 15 psig, 225 rpm for 20 psig, 280 rpm for 25 psig, 380 rpm for 30 psig, and 460 rpm for 35 psig inlet pressure.

The maximum power output with an inlet pressure of 35 psig is 0.184 horsepower.

VI. Design of Solar Power System

Since the criteria for operation of the Solar Power System have been established and the theoretical analysis of the expected system performance calculated, the components of the system must be selected to meet these requirements.

Vapor Generator

The vapor generator must supply a sufficient quantity of vapor to run the vapor cycle engine at the specified level of power output. We have established in Section III that 0.00117 pounds of vapor pass through each cylinder of the engine per cycle. With four cycles per revolution, at an engine speed of 460 rpm, the mass flow rate of fluid through the system is 2.16 lb per minute. The enthalpy change of the fluid in the vapor generator is:

$$\Delta H = (108.5 - 24.5)\ \text{Btu/lb} = 84\ \text{Btu/lb}$$

Therefore the rate at which heat must be supplied is 10,866 Btu/hr.

An initial estimation of the required collector area can be made by assuming a conversion efficiency of 40% for the absorbers and an incident solar flux of 275 Btu/hr ft^2.

The required area of collectors is:

$$A = \frac{10,866}{275 \times 0.40} = 98.7\ \text{ft}^2$$

$$A \simeq 9.16\ \text{m}^2$$

Three solar flat plate collectors of each 3m^2 constructed in Rwanda are adequate to supply the necessary vapor to produce 0.184 horsepower.

Vapor Cycle Engine

The V-2 vapor cycle engine used in this system was designed and built and is available at the Solar Energy Laboratory at the University of Florida. The problem is now to try to build a similar one in my country.

Pump

The requirements for the pump needed to circulate the fluid through the solar power system are:

a) inlet pressure of 16.2 psia

b) pressure rise $\Delta P = 45.123 - 16.2 = 28.9$ psia

c) capacity of 0.1146 gallons per minute.

A typical equation for the horsepower rating of a pump is:

$$HP = \frac{\text{gpm X Head}}{\text{3960 X efficiency}}$$

In our case:

Volume flow rate: 0.114 gpm

Head: $\Delta P = 28.9$ psi $= 100.4$ feet of water

Let's suppose that $\eta_{pump} = 60\%$

Therefore: $HP = \frac{0.114 \times 100.4}{3960 \times 0.60} \simeq 0.0048$ HP

The required power input to the pump is 0.0048 horsepower.

Condenser

A cross section of the condenser that can be used is shown in Figure 6. It consists of a 1 inch diameter copper tube formed in a helix of 7 coils each of diameter 2 feet and immersed in a metal drum.

Water is supplied at a rate of 3.5 gpm at a temperature of 72°F and exits at 78°F. The enthalpy in the condenser is 102 - 24.5 of 78.5 Btu per pound of fluid. From the determined flow rate of 2.16 pounds per minute,

the heat which must be extracted from the fluid in the condenser is 10,170 Btu/hr.

Standard copper pipe of 1 inch nominal size has an outside diameter of 1,315 inches and an inside diameter of 1.062 inches. the minimum length of pipe required is:

$$L = \frac{12\ (10,170)}{D\ (200)\ 5} = 29.7 \text{ feet}$$

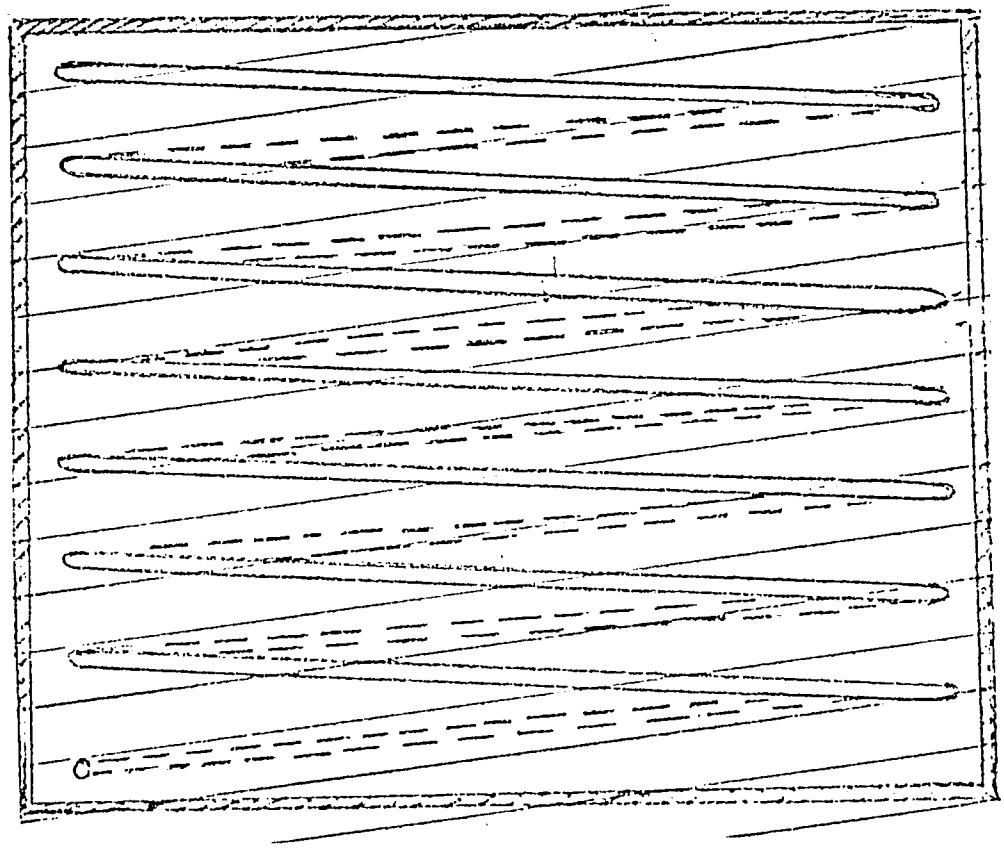

Figure 6. Cross-Section of Condenser

VII. Conclusion

The theory, the calculations and experimental results of this work prove the possibility of building a solar power utilizing the V-2 engine cycle where the vapor generator is composed of flat plate collectors.

This project meets in some way a project conducted in my country that consists of a solar power where the vapor generator is a flat plate collector with reducing heat loss structures.

These structures are made by cutting old neon tubes. The absorber of such a collector can attain high temperatures. It is also possible to get vapor under pressure from this flat plate collector and if a proper working fluid is used, that vapor can run a vapor engine to transform thermal energy into mechanical and then run an electrical generator.

The power delivered by such a solar power system can be used for several purposes:

- alimentation of radios, tape recorders widely used for teaching languages in remote areas in my country
- for pumping water, ...

The project is to be continued.

Bibliography

1. E.A. Farber, F.L. Prescott, Solar Powered V-2 Vapor Engine.

2. Richard Lee Osman, "Development of a Solar Power System Utilizing a V-2 Vapor-Cycle Engine", Thesis, University of Florida, Gainesville, 1971.

3. Kenneth Wark, Thermodynamics, McGraw-Hill Book Company, New York, 1966, p. 508.

4. ASHRAE Handbook of Fundamentals, published by the American Society of Heating, Refrigerating and Air Conditioning Engineers, Inc., New York, 1967, pp. 217 and 286.

5. Theodore Baumeister (ed.), Standard Handbook for Mechanical Engineers, 7th edition, McGraw-Hill Book Company, New York, 1967, pp. 4 - 104.

APPENDIX A

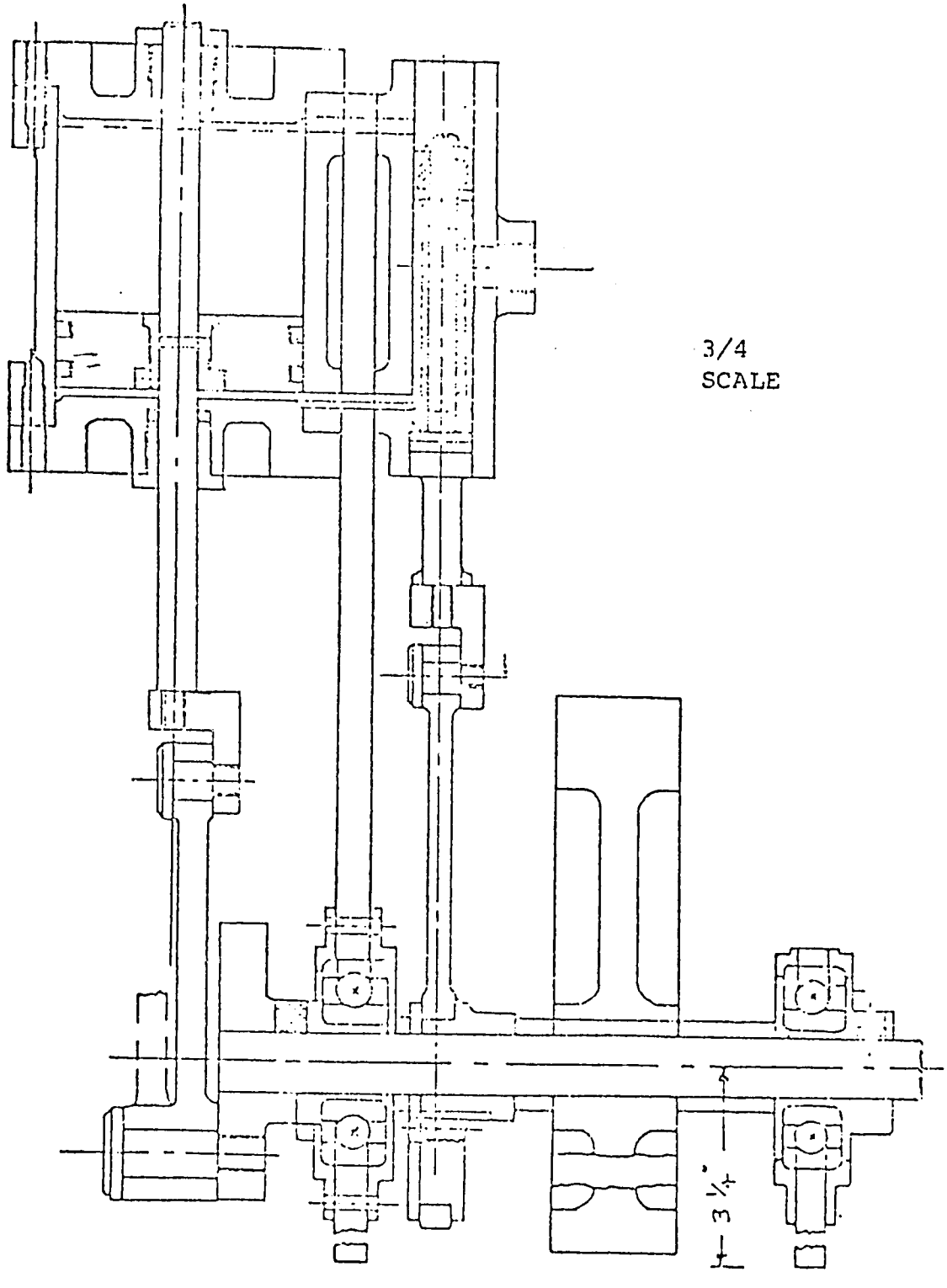

Cross-Section of Engine

APPENDIX B

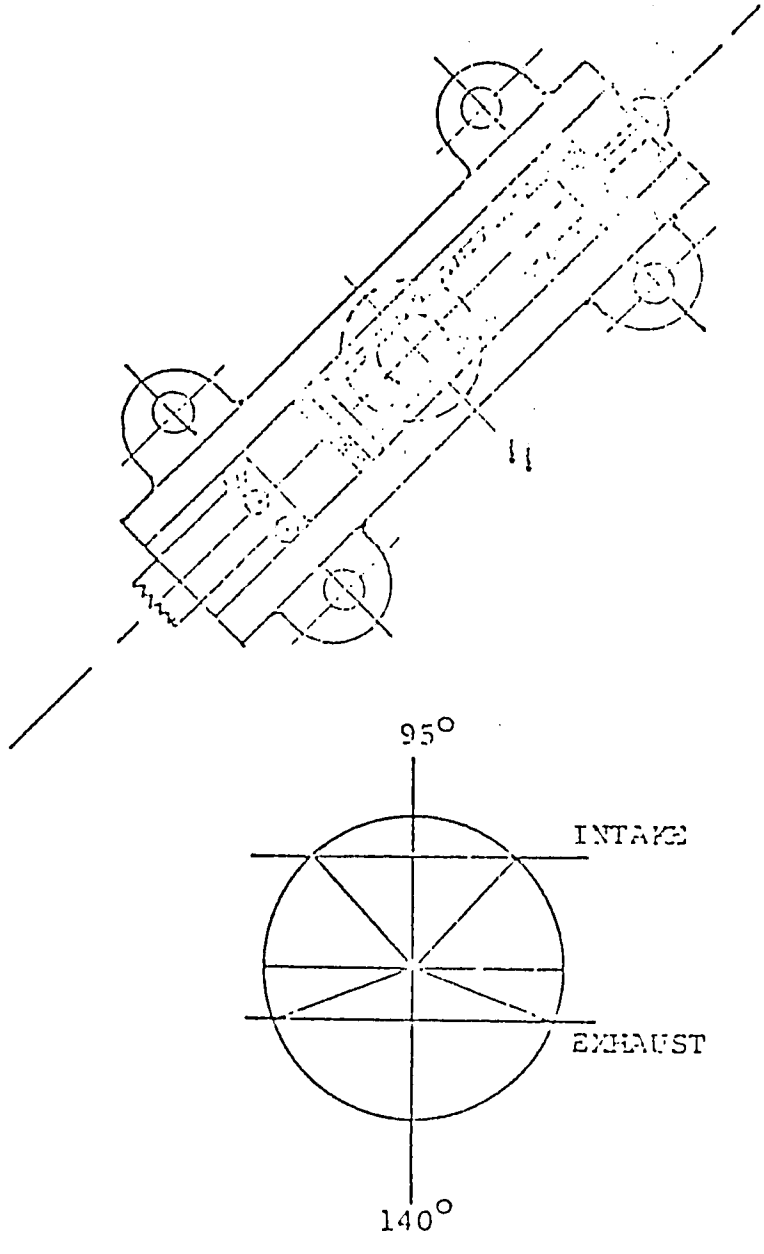

Valve Assembly and Valve Opening Diagram

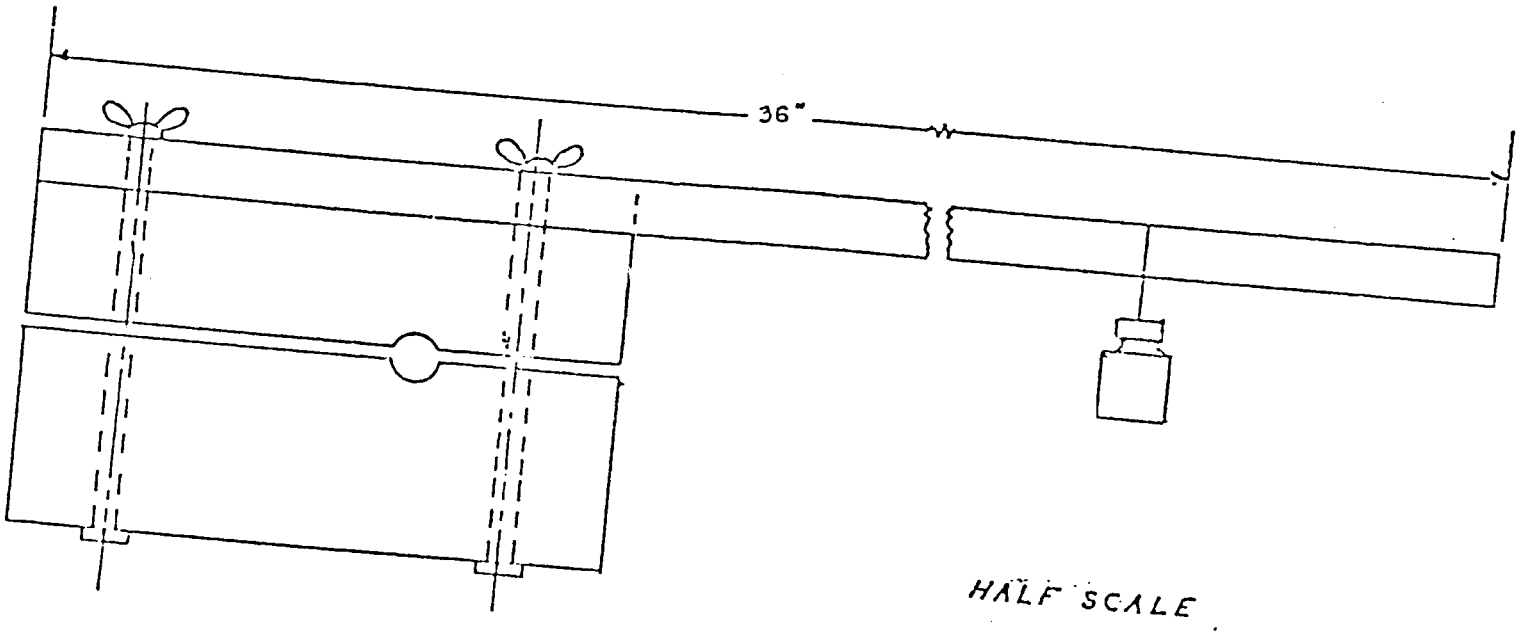

Prony Brake Dynamometer