PN-AAW-078

PRODUCER GAS CLEANUP

T.A.E.T.-V
Group Project Report

Coordinator: Eugene O. Refuerzo, Philippines
Members : Mbaari Kinya, Kenya
Htein Lin, Burma
Jesus Then Dominguez, Dominican Republic

Spring, 1982
University of Florida

Project Report
PRODUCER GAS CLEANUP

I. OBJECTIVE

The objective of this project has been to design and fabricate auxiliary gas cleaning equipment for a gasifier system which generates producer gas from wood chips to fuel a spark-ignition engine.

II. PROJECT DESCRIPTION

Participants of previous training sessions have constructed two wood-gasifiers, one of which is said to have been successfully operated, i.e., generating combustible gas from wood chips. A small 3½-hp gasoline-engine was also purchased for experiments in the laboratory.

This project aims to provide for the necessary cleaning and cooling of producer gas from the gasifier to the engine since this gas is hot and contains impurities such as ash, soot, moisture and tar which may do damage to the engine. The complete gasifier-fired engine system will then have the following major components: reactor (or gasifier unit), gas cleaning equipment, mixing box and the engine (Figure 1).

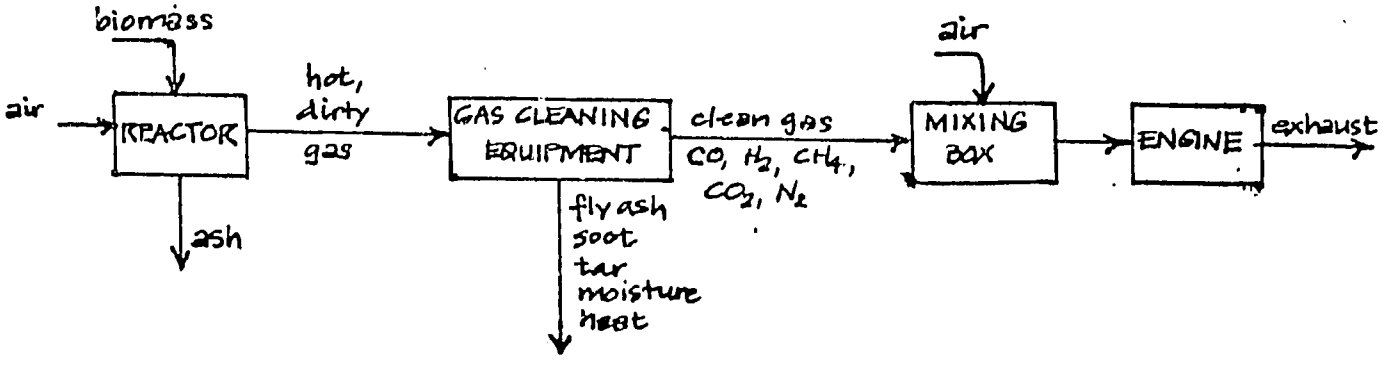

Fig. 1. BLOCK DIAGRAM OF GASIFIER SYSTEM

III. DESIGN

It does not take much to observe that the existing gasifiers are much too over-sized for the engine. Apparently, these gasifiers had been designed with no specific engine in mind. On the other hand, it seems that the existing engine was purchased to be used for various experiments and not particularly for the gasifiers.

The approach taken in this project was to design the gas cleaning equipment to fit the engine and not for the size of the gasifiers.

The gas cleaning equipment fabricated are three units: cyclone separator, condenser/cooler and filter. It is possible to construct a compact gas cleaning system; however, the above devices have been assembled separately for experimentation purposes, (i.e., each unit can be tested for pressure drop and cleaning efficiency and improvement/replacement would be convenient). The assembly of these units is shown in Figure 2.

A. The Cyclone Separator

A cyclone, which is an inertial separator without moving parts, separates particulate matter from a carrier gas by transforming the velocity of an inlet stream into a double vortex confined within the cyclone. In the double vortex, the entering gas spirals downward at the outside and spirals upward at the inside of the cyclone outlet. The particulates, because of their inertia, tend to move toward the outside wall, from which they are led to a receiver. Because of its versatility and low cost, the single-cyclone separator is probably the most widely used of the dry centrifugal separators.

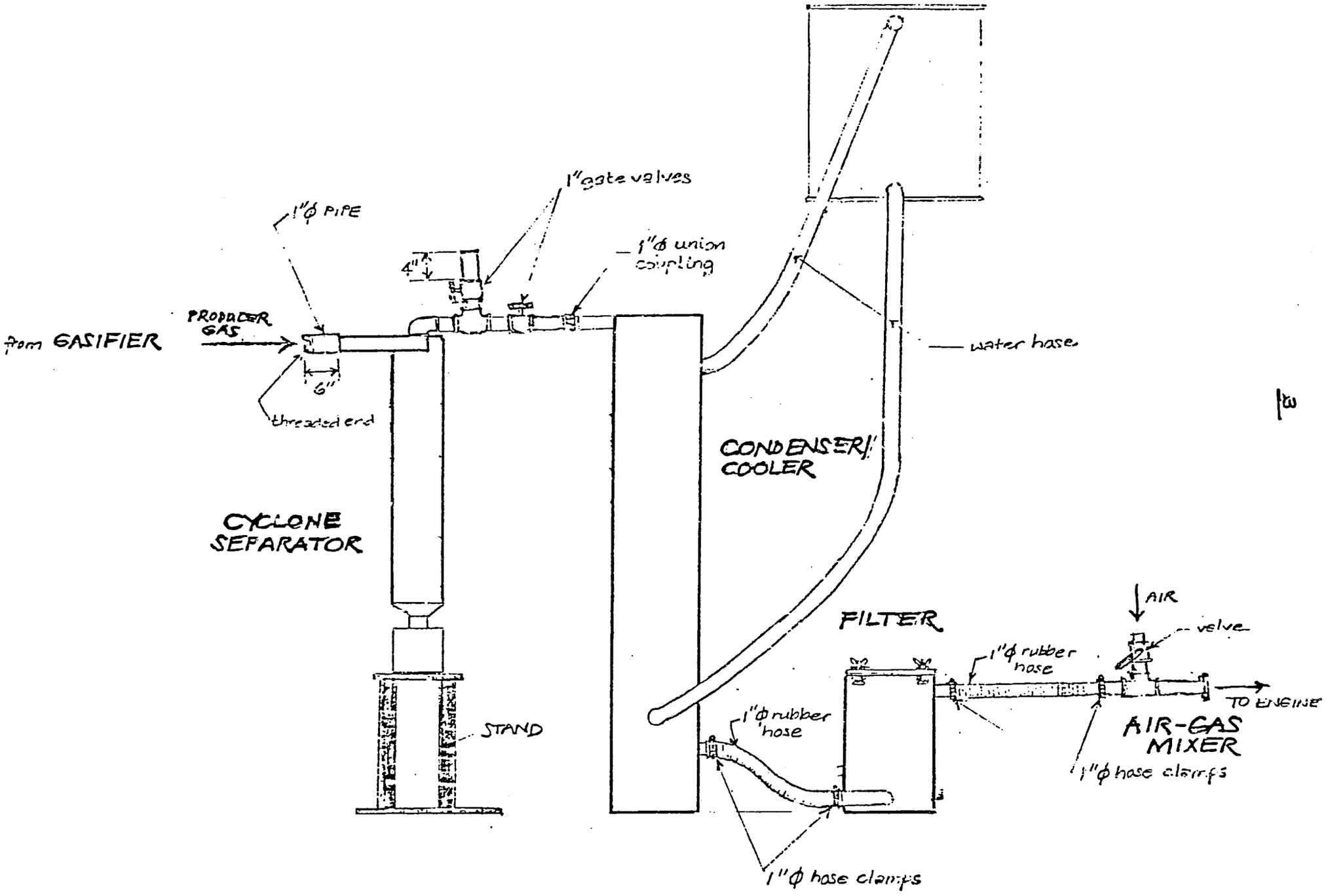

Fig. 2. GAS CLEANING ASSEMBLY

The typical dimension ratios of a single high-efficiency cyclone are shown in Figure 3.[1]

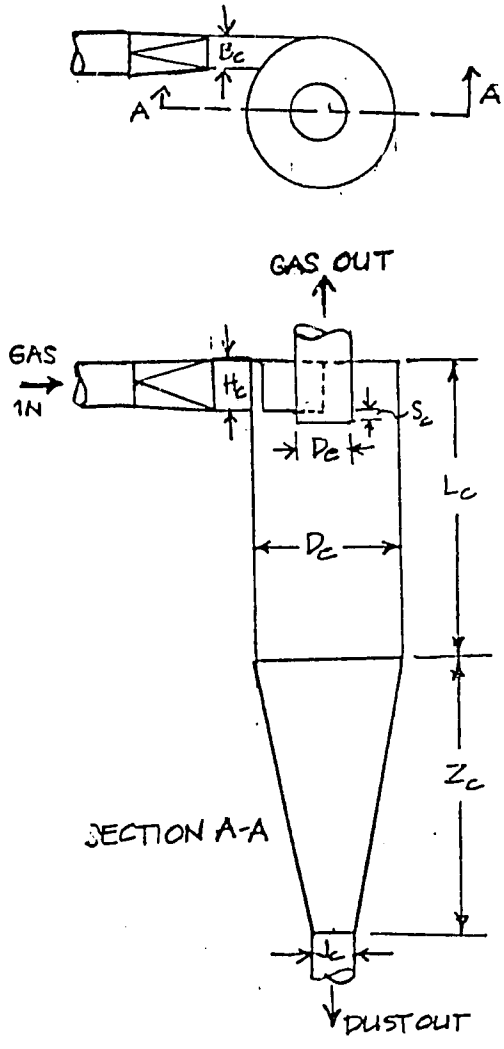

D_c = major cylinder diameter

$$L_c = 2D_c$$

$$D_e = \frac{D_c}{2}$$

$$H_c + S_c = 5/8\, D_c$$

$$H_c = \frac{D_c}{2}$$

$$B_c = \frac{D_c}{4}$$

$$J_c = \frac{D_c}{4}$$

Fig. 3. SINGLE HIGH-EFFICIENCY CYCLONE WITH TYPICAL DIMENSION RATIOS

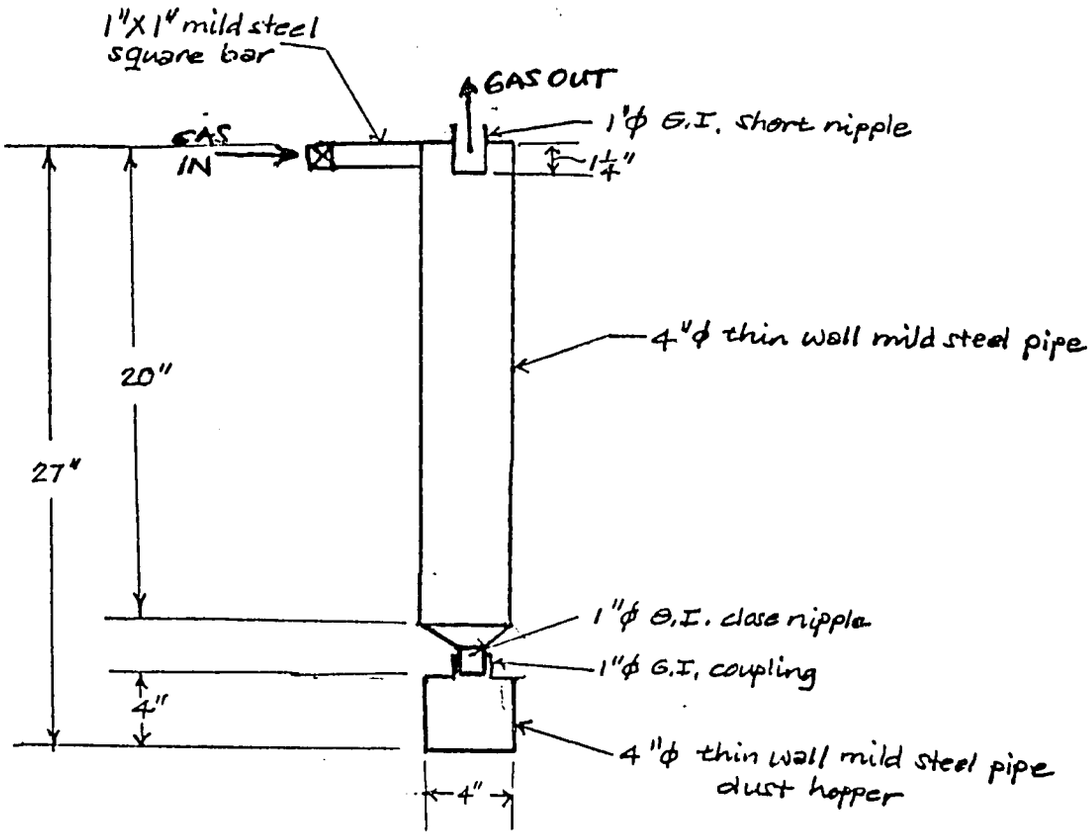

Fig. 4. FABRICATED CYCLONE

The actual cyclone fabricated is shown in Figure 4, making use of easily available materials and of standard sizes. The proportional length of the conical portion could not be followed, for lack of fabrication equipment to be used. However, the major cylinder has been made longer and a mild steel plate heated and hammered to a short cone served to funnel entrained particles into the dust hopper below

In general, cyclone efficiency increases with an increase of the following:[1]

(1) density of the particulate matter,
(2) inlet velocity into the cyclone,
(3) cyclone body length,
(4) number of gas revolutions inside the cyclone,
(5) ratio of cyclone body diameter to gas outlet diameter,
(6) particle diameter,
(7) amount of dust entrained in the gas, and
(8) smoothness of inner cyclone wall.

Deviations of the actual cyclone fabricated from the typical high-efficiency dimension ratios have been based on the above factors, also taking into consideration that generally, increase in efficiency increases the pressure drop of gas flow across the cyclone.

B. The Cooler/Condenser Unit

Cooling of the gas may serve two purposes. It increases the volumetric efficiency of the engine and contributes to cleaning the gas since cooling beyond the dew point will cause condensation of steam and a simultaneous precipitation of particulates in the gas.

The unit constructed is shown in Figure 5. It is basically a shell-and-tube heat exchanger with water used as the cooling medium in countercurrent flow.

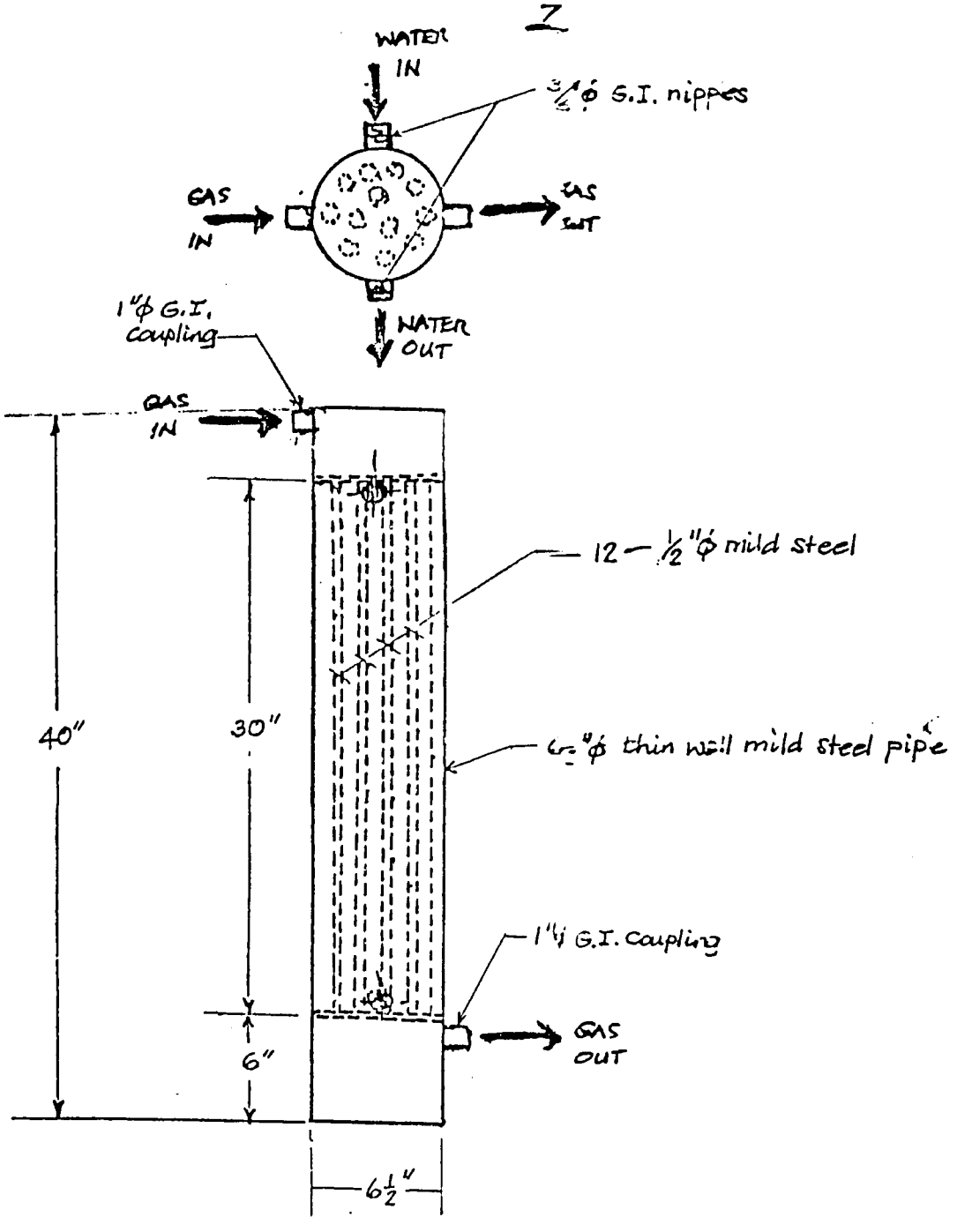

Fig. 5. COOLER/CONDENSER UNIT

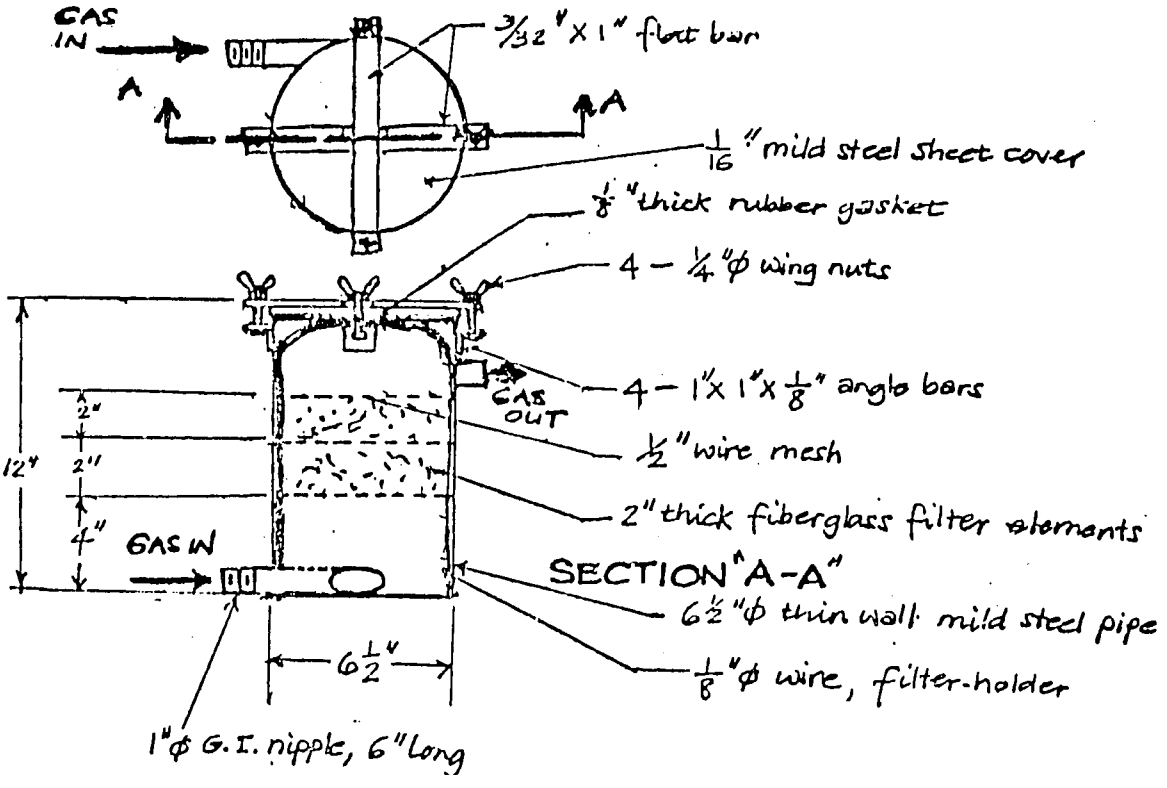

Fig. 6. DRY FILTER

C. The Dry Filter Unit

The final gas cleaning component is a dry filter unit which uses fiberglass as filter element. This final filtration serves to screen out remaining particulates in the now low-temperature gas.

Figure 6 shows the unit. Provisions of design have been made so that replacement or cleaning of the filter elements can be done quickly and easily.

As shown in the flow diagram and assembly in Figure 2, the cleaned gas is then mixed with air and fed into the engine.

IV. TEST-RUN AND OBSERVATIONS

The assembled equipment were put to a test-run using the existing updraft gasifier and $3\frac{1}{2}$-hp engine, The gasoline tank was removed and the engine was started and operated entirely on the generated gas.

The operating time, however, lasted for a few minutes and re-starting was difficult. Inspection showed that the filter element was saturated with moisture and the spark-plug of the engine was wet. The major causes of this could be: (1) the existing gasifier may not be suitable for use with internal combustion engines, and (2) the wood chips used were too high in moisture content. It had been noted, however, in the previous field trips, observing two different wood-fed gasifiers operated, that wood chips of similar dryness and cut to the same size caused no operating problems. Obviously, gasifiers should be designed for the engines with which they would be fitted.

V. CONCLUSION

It is evident that construction of producer gas cleaning equipment for a small gasifier-fired engine system can be done with easily available materials in urban areas of less-developed countries. Assembly and operation require no skills; fabrication and repair require only welding and cutting.

Testing of the equipment, however was not sufficient This may be a different project altogether — using test instruments to determine cleaning efficiency, pressure drops and gas quality. This may be undertaken

by interested groups in subsequent T.A.E.T. sessions. It is recommended, however, that a properly designed gasifier unit for the engine will be constructed. (Useful gasifier literature are listed in a subsequent page).

VI. HOW THE PROJECT RELATES TO THE COUNTRY SITUATION

Producer gas cleanup is an integral component of a gasifier-fitted engine system. This system can be widely useful in less developed countries.

A. Philippines

Philippine rural energy needs, aside from cooking and lighting, are mostly in the form of mechanical work for irrigation, ricemills, low-power generation, grinding, drinking-water pumping, cold storage, and in the form of heat for crop-drying. Most, if not all of these needs can be supplied by energy from biomass, which is abundant in the country and renewable, particularly in the form of agricultural residues such as coconut husks, coconut shells, corn cobs, wood waste and rice hulls. The existing internal combustion engines which drive most of these systems have become more costly to operate and often times not operated at all due to the increasing scarcity and price of fuel oil.

To utilize wood and agricultural residues to run these engines, it is necessary to convert them into utilizable form. The gasifier is the device for converting these agricultural residues into gaseous fuel for internal combustion engines, and thus provide a feasible answer to Philippine rural energy needs.

B. Kenya

To reduce the oil bill in Kenya, it is very important to find a substitute for diesel fuel. Kenya is basically an agricultural country. Agricultural machinery, water pumps, lighting, etc. use diesel fuel. For this reason, the government is looking into the substitution of diesel using various fuels such as vegetable oils, methanol and producer gas from wood.

Recent studies have indicated that there is enough wood fuel in the country but its distribution is the limiting factor.

Agricultural residues have not been quantified but it is not the intent of the government to utilize these as a source of energy to avoid soil depletion of nutrients.

In Kenya, the emphasis is on wood rather than charcoal gasification even though in such cases, charcoal will be used.

VII. REFERENCES.

1. Modern Pollution Control Technology. Staff of Research and Education Association. 1978

2. Schweitzer, Philip A. ed. Handbook of Separation Techniques for Chemical Engineers. McGraw-Hill. 1979.

Recommended literature for gasifier design:

1. Generator Gas: The Swedish Experience from 1939-1945. Translated by the Solar Energy Research Institute. SERI/SP-33-140, January, 1979.

2. Redogorelse for Riksnamndens for Ekonomisk Forsvarsberedskap Forskuings Och Forsoksverksamhet Pa Genogtsomradet Vid Stateus Maskinpvouningar 1951-1962. 1963. Ultuna, Uppsala 7, Sweden. (Excerpt — see Appendix).

<u>Appendix</u>: Excerpt from recommended gasifier design literature no. 2 (page 12).

Heart dimension + performance of producer gas generator for wood

Tabell 3.3 Härddimensioner och prestanda för vedgasgeneratorer

Härdbeteckning d_r/d_h	Dimensioner (beteckningar enligt bild 3.19) d_h	d_r	d_r'	h	H	R	n	d_m	$\frac{A_m}{F_h}$ 100	$\frac{d_r}{d_h}$	$\frac{h}{d_h}$	Gasmängd max.	min.	Maximal vedförbrukning	v_m
	mm	mm	mm	mm	mm	mm	St	mm				Nm^3/h	Nm^3/h	kg/h	m/s
268/60	60	268	150	80	256	100	5	7,5	7,8	4,5	1,33	30	4	14	22,4
268/80	80	268	176	95	256	100	5	9	6,4	3,3	1,19	44	5	21	23,0
268/100	100	268	202	100	256	100	5	10,5	5,5	2,7	1,00	63	8	30	24,2
268/120	120	268	216	110	256	100	5	12	5,0	2,2	0,92	90	12	42	26,0
300/100	100	300	208	100	275	115	5	10,5	5,5	3,0	1,00	77	10	36	29,4
300/115	115	300	228	105	275	115	5	11,5	5,0	2,6	0,92	95	12	45	30,5
300/130	130	300	248	110	275	115	5	12,5	4,6	2,3	0,85	115	15	55	31,5
300/150	150	300	258	120	275	115	5	14	4,4	2,0	0,80	140	18	67	30,0
400/130	130	400	258	110	370	155	7	10,5	4,6	3,1	0,85	120	17	57	32,6
400/150	150	400	258	120	370	155	7	12	4,5	2,7	0,80	150	21	71	32,6
400/175	175	400	308	130	370	155	7	13,5	4,2	2,3	0,74	190	26	90	31,4
400/200	200	400	318	145	370	155	7	16	3,9	2,0	0,73	230	33	110	31,2

nozzle i.d.

number of nozzles

Nm^3 → normal cu. m.

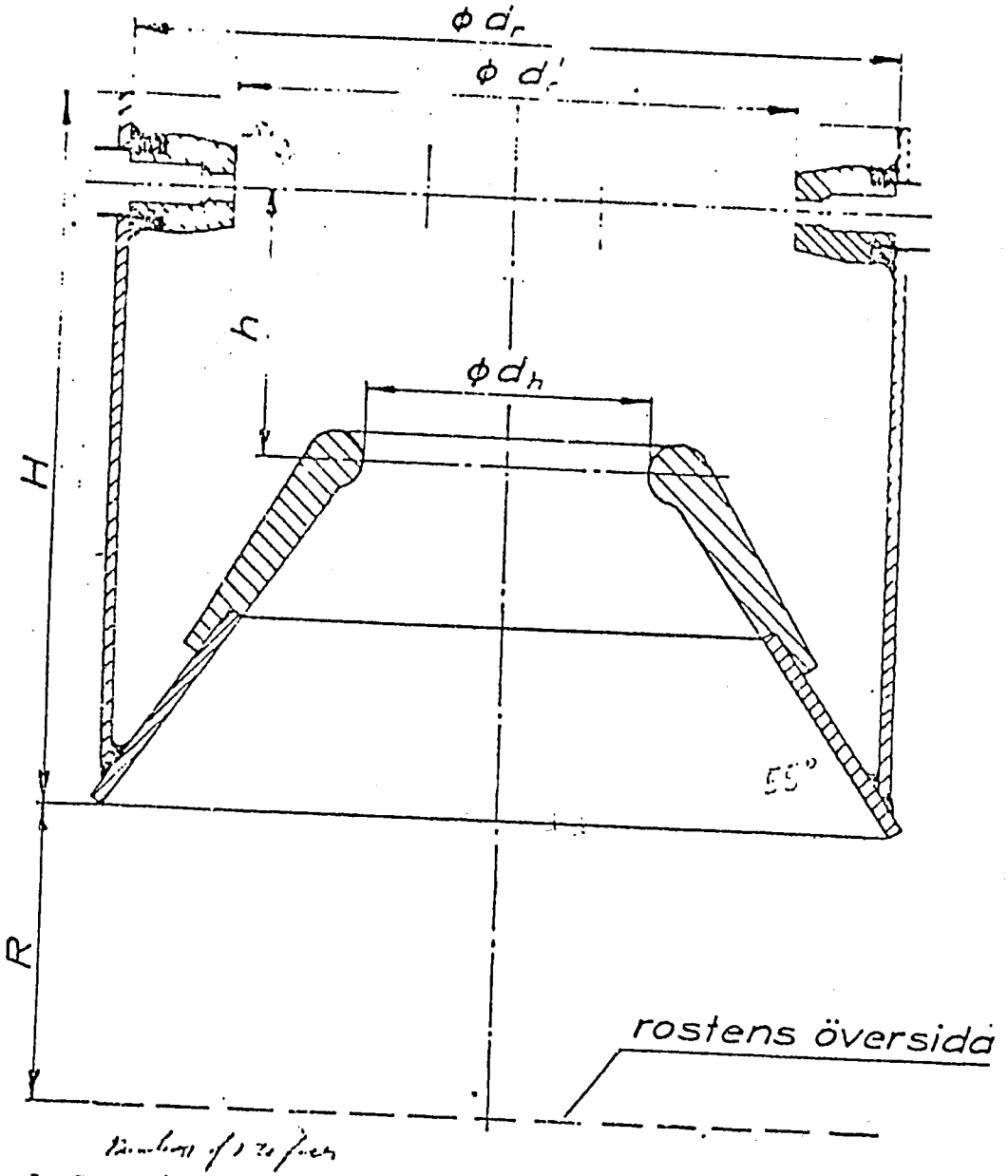

n = antal munstycken

d_m = munstyckenas innerdiameter

A_m = munstyckenas genomströmningsarea $\left(\frac{\pi d_m^2}{4} n\right)$ cm^2

A_h = härdens genomströmningsarea $\left(\frac{\pi d_h^2}{4}\right)$ cm^2

V_m = lufthastighet i munstyckena vid maximal gasmängd m/s

Bild 3.19 Beteckningar på viktigare härddimensioner enligt tabell 3.3.

PROJECT PROPOSAL

Producer Gas to Run an Internal Combustion Engine

Proponents: Eugene O. Refuerzo, Coordinator
Aubrey James Marks
Mbaari Kinya

I. Objective:

To design, fabricate and test a prototype wood-fed downdraft gasifier with auxiliary gas cleaning equipment to run an internal combustion engine.

II. Project Description:

There exists in the TREEO Center two gasifier units constructed by previous training participants and a 3 1/2-HP spark-ignition engine. It is proposed in this project to run this engine with producer gas. Thus, the project shall proceed with the design and fabrication of gas cleaning equipment, which will provide the necessary passage of the gas produced from the gasifier to the engine.

Without this gas cleaning equipment, it is not desirable to run the engine with producer gas taken directly from the outlet of the gasifier because the gas contains impurities such as soot, tar and fly ash which will cause damage to the engine.

A test-run will then be undertaken, with the prototype gas cleaning equipment and both the existing gasifier units used one at a time.

A contingency plan is to design a new prototype gasifier unit suited to the existing engine, which will be fabricated and tested; the existing gasifiers may not work, or work very poorly.

III. Design:

A. Sketch (attached):

The attached sketches show a rough design of the prototype components. The materials and equipment needed are specified in the next sections. These are just rough sketches, as time has allowed. However, a final design will be submitted on March 29, Monday, utilizing the same materials and equipment. (Please see work schedule.)

PROJECT COMPONENTS

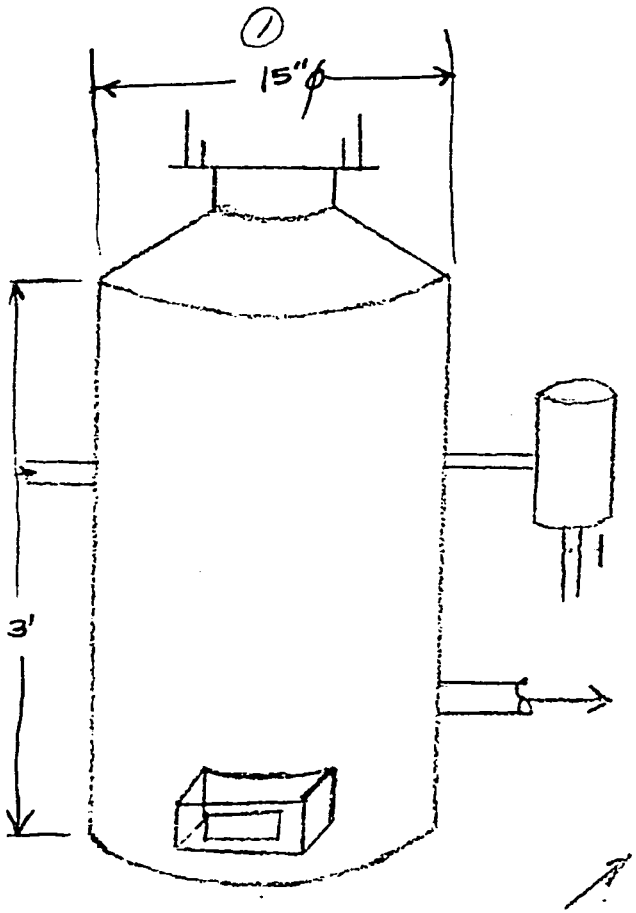

GASIFIER

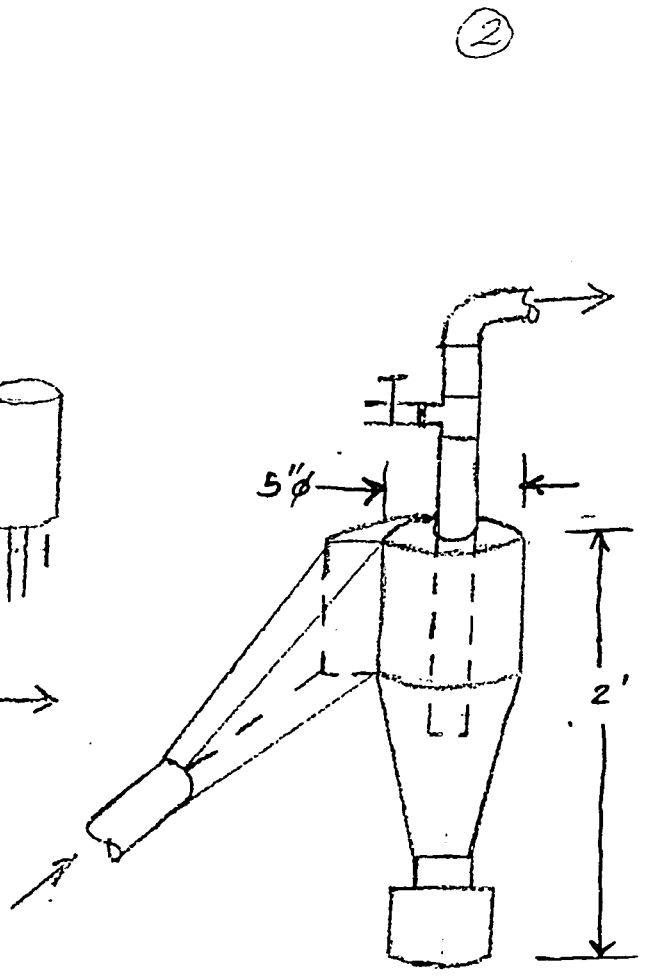

CYCLONE

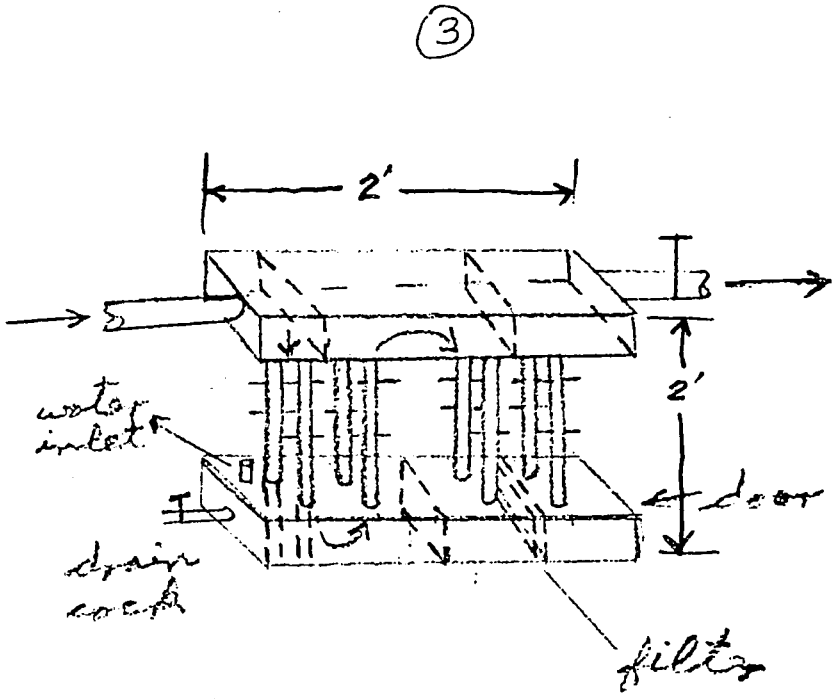

Note: Filter door is similar to door on gasifier

COOLER/FILTER

(3)

GASIFIER

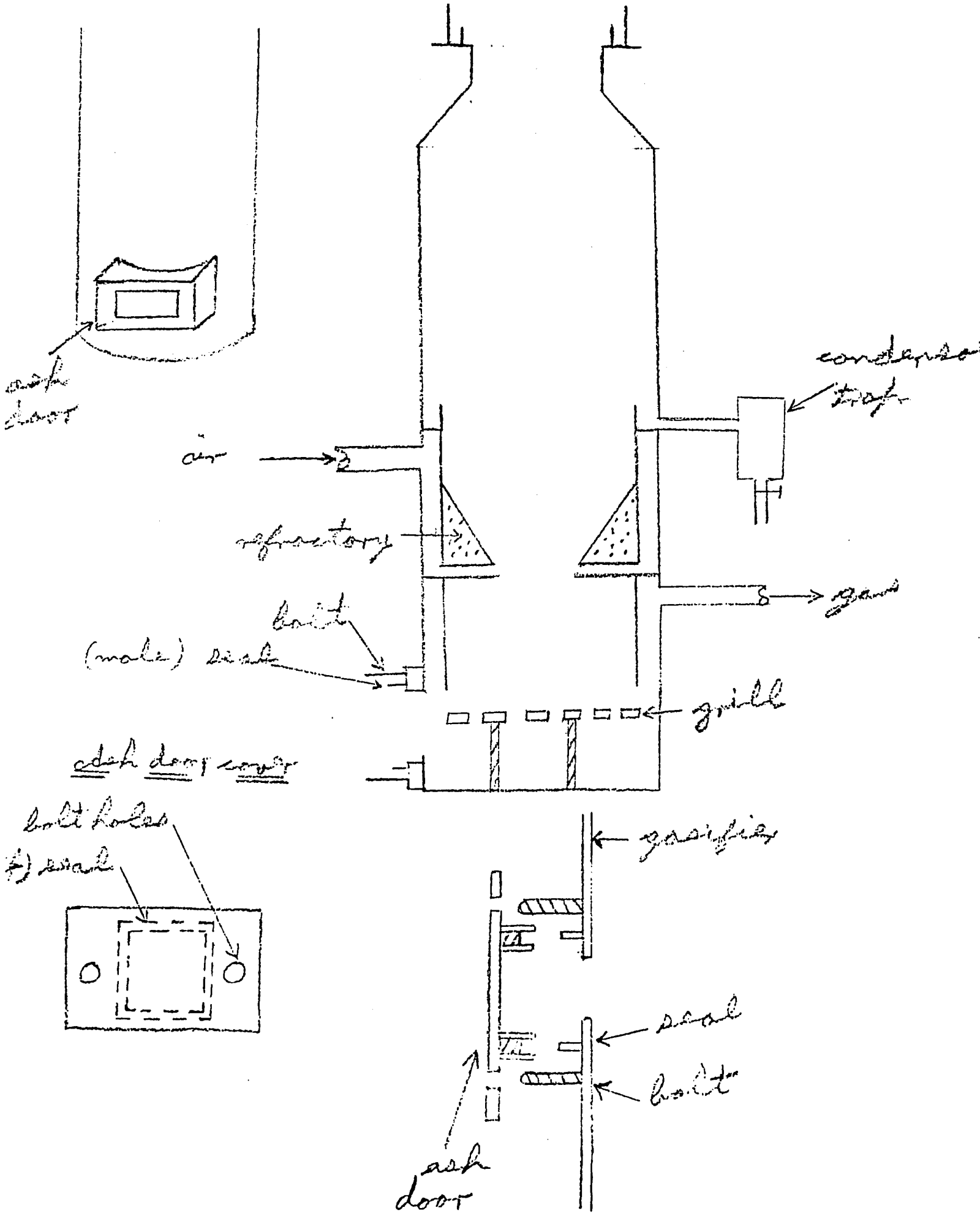
ash door
condenser trap
air
refractory
gas
bolt
(male) seal
grill
ash door cover
bolt holes
(f) seal
gasifier
seal
bolt
ash door

Design:

b. Materials:

1 sheet	Ga. 16 galvanized iron, 4' x 8'
1 sheet	1/8" thick mild steel, 4' x 8'
1 sheet	Scrap 1/4" mild steel, 2' x 2'
1/2 sheet	Garlock gasket, 4' x 4'
8 pcs.	1/2" x 3" long bolts and nuts
2 cartons	Refractory cement (for up to 2,700°F)
1 pc.	1-1/2" swing check-valve
1 pc.	1/2" stainless steel pipe, sch. 40, 5' long
1 pc.	1/2" gate valve
1 pc.	3" G.I. pipe, schedule 20, 2" long
1 pc.	2" G.I. pipe, schedule 40, 20' long
1 pc.	1/2" G.I. pipe, schedule 40, 2' long
1 pc.	1-1/2" G.I. pipe, schedule 40, 6" long
5 pcs.	2" G.I. elbows
4 pcs.	2" G.I. tee with 2" male junction
1 pc.	1" pipe nipple
1 pc.	1" G.I. pipe coupling
4 pcs.	2" G.I. union couplings
2 pcs.	1" G.I. pipe, schedule 20, 20' long
1 pc.	1/4" plastic tubing, 30' long
1 pc.	1/4" thick plywood, 3' x 3'
1 pc.	Small blower with 12 volt motor
1 pc.	Wire-lined rubber hose, 2" , heat resistant (as used for vehicle radiators)
5 pcs.	Hose clamps for 2" pipe
1 pc.	5 cfm blower w/motor

Design:

c. Fabrication equipment:

1. Sheet Roller
2. Pipe bender
3. Shear cutter (for mild steel sheet 1/8" thick)
4. Oxy-acetylene torch cutter
5. Arc welding machine
6. Pipe threader
7. Portable drill
8. Portable surface grinder
9. Soldering equipment

Design:

d. Tools:

1. Pipe wrench
2. Anvil
3. Bench vise
4. Mallet
5. Cementing trowel
6. Vise-grip

e. Work Schedule

IV. Experimentation

a. Test instruments

1. Multi-point thermocouple thermometer (up to 1600°C)
2. Orsat gas analyzer
3. Gas flow meter (rotameter)
4. Fabricated differential manometers
5. Vacuum gauge, capacity
6. Moisture meter
7. Prony brake dynamometer for small engine (5 HP)
8. Platform scale

E. WORK SCHEDULE

ACTIVITIES	WEEK NUMBER								
	4	5	6	7	8	9	10	11	12
1. Specify fabrication materials, prepare rough design sketch									
2. Acquire fabrication materials									
3. Finalize design									
4. Acquire/negotiate for use of fabrication equipment and test instruments									
5. Fabricate prototype									
a. cyclone and filter/cooler									
b. mixing box									
c. gasifier unit									
6. Assemble gasifier system									
7. Conduct test									
8. Analyze test data									
9. Prepare project report									

B. Test Measurements

1. Gas Analysis

Composition of the gas produced shall be determined in order to know how efficient the gasifier will be. A high % CO and low % O_2 indicates good performance while a high % CO_2 indicates poor performance these percentage gas compositions shall be compared with data of other gasifiers. The instrument to be used for this test will be the Orsat Gas Analyzer.

2. Gasifier Fuel Consumption

A platform scale in which the gasifier is set and will measure the consumption of gasifier fuel (By difference in weights).

3. Gas Flow Rate

Flow rate of gas produced from the gasifier to the engine will be measured by a rotameter.

4. Pressure Drops

Efficiency of design of gas cleaning units is determined not only on the cleanness of the gas produced but also on minimizing the friction loss of gas passage through them. The differential manometers fabricated from copper tubings and plastic tubings. Filled with dyed water will be used as instruments for measuring the pressure drops.

5. Moisture Content of Gasifier Fuel

Moisture content of the gasifier fuel will be measured by a moisture meter. Moisture content is one important factor affecting the efficiency of the gasifier.

6. Power Produced

A comparison of the horsepower output of the engine shall be measured between operating on gasoline and on the producer gas generated. A front brake will be used for this purpose

7. Temperature

Temperatures of reaction inside the gasifier will affect its efficiency. Also, the temperatures of the gas into and out of the cooling/cleaning unit will show how efficient the gas cooling will be. The objective of cooling is to increase the density of the gas to get greater engine power output. The Hewlett-Packard multi-point Thermocouple thermometer will be used for temperature measurements.

V. How the project relates to the country situation

A. Philippines

Philippine rural energy needs, aside from cooking and lighting, are mostly in the form of mechanical work for irrigation, ricemills, low-power generation, grinding, drinking-water pumping, cold storage, and in the form of heat for crop-drying. Most, if not all of these needs can be supplied by energy from biomass, which is abundant in the country and renewable, particularly in the form of agricultural residues such as coconut husks, coconut shells, corn cobs, wood waste and rice hulls. The existing internal combustion engines which drive most of these systems have become more costly to operate and often times not operated at all due to the increasing scarcity and prices of fuel oil.

To utilize agricultural residues to run these engines, it is necessary to convert them into gaseous form. The gasifier will be the device for converting these residues into utilizable gaseous fuel for internal combustion engines, and thus provice a feasible answer to energy needs in Phillipine rural areas.

B. Kenya

To reduce the oil bill in Kenya it is very important to find a substitute for diesel fuel. Kenya is basically an agricultural country. Agricultural machinery, water pumps, lighting, etc., use diesel fuel. For this reason the government is looking into the substitution of diesel using various fuels such as vegetable oils, methanol and wood gasification.

Recent studies have indicated that there is enough wood fuel in the country but its distribution is the limiting factor.

Agricultural residues have not been quantified but it is not the intent of the government to utilize these as a source of energy to avoid soil depletion of nutrients.

In Kenya the emphasis is on wood rather than charcoal gasification even though in such cases charcoal will be used.

PROJECT
INTERMITTENT WATER/AMONIA
ABSORPTION REFRIGERATION UNIT

S. Kitutu
M. Abdula
A. Barriga

List of Materials

Item		Quantity
Steel Tubing, 1/2 inch		20 ft.
Valves (slow opening), 1/2 inch		6
One-way Valve (check valve), 1/2 inch		2
Pressure Gage (0-300 psi), 1/2 inch port		2
Galvanized Iron Sheets, 3/32", 1.5 X 1.5 ft.		5
Thermocouple Wire, iron - nonstandard		30 ft.
Electric Heater, 2 kw		1
10-channel Pyrometer		1
Styrofoam (insulating) Sheets, 1" thick	3 x 2 ft.	8
	2 x 2 ft.	4
Glue (for styrofoam)		1/2 gallon
Water Pump, 100 psi, 2 GPH, corrosion resistant		1