PN-AAY-991

BIOGAS

Challenges And Experience From Nepal

Vol. I

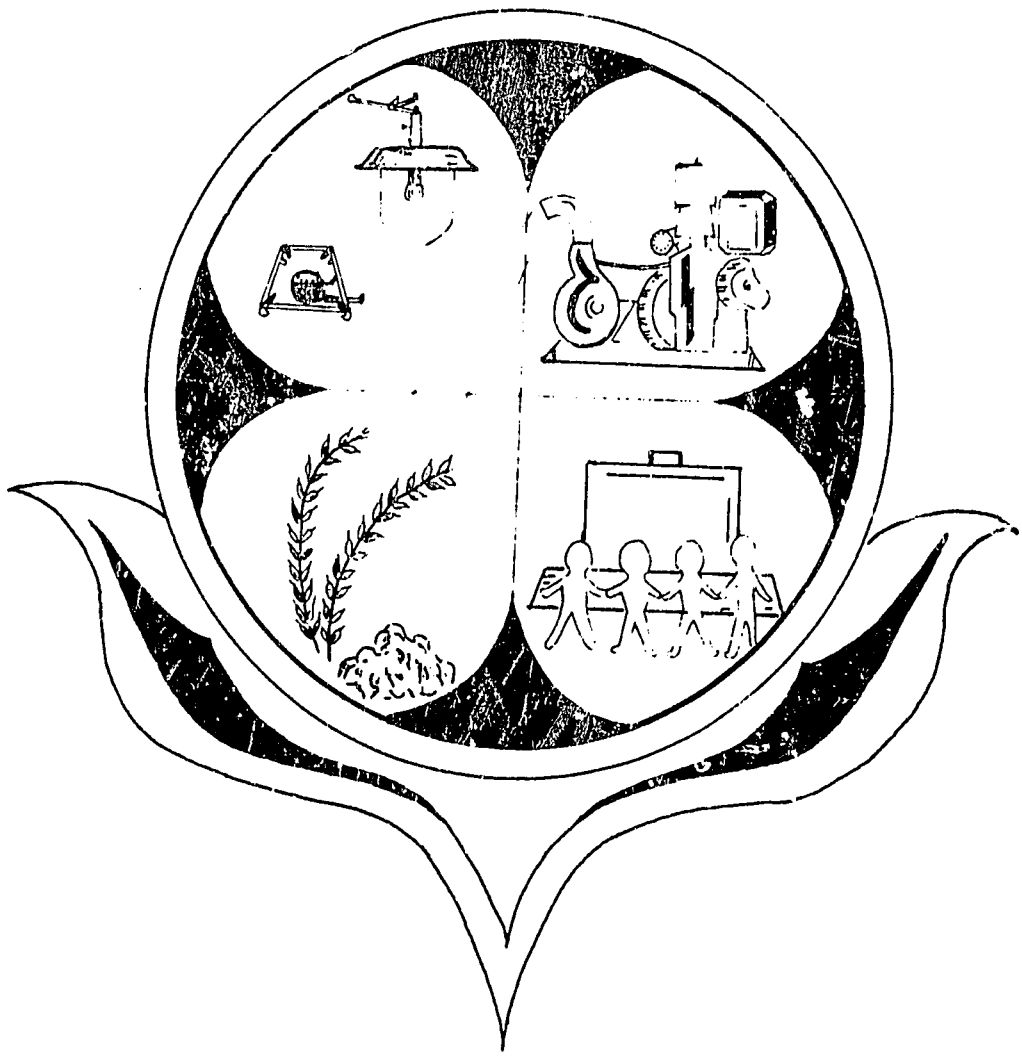

United Mission To Nepal

ABOUT THE AUTHORS

Andrew Bulmer, BA, General Arts from Durham University, U.K. After his studies he worked for 4 years in Orissa, India, with the Village Reconstruction Organization which aimed to assist village communities after being devastated by cyclones. Since then he has been in Nepal, living largely in one community for over 4 years and involved in general development activities there, as well as being specifically concerned with assessing the effectiveness of Community Biogas Systems.

John Finlay, C. Eng., MI Prod E., worked in the engineering industry in U.K. for 17 years in various positions including value analysis, and organization and method study. He has been working in Biogas research in the Development and Consulting Services since 1974, and has presented papers on this subject in various countries. He has also compiled and technically edited the United Nations book 'Guidebook on Biogas Development'. His particular concern has been reliable cattledung biogas plants and accessories suitable for village use which are low cost but also efficient.

David Fulford, B.Sc., Physics from Bristol University, U.K. In previous assignments, he has worked as scientific officer at RAF, Farborough, researching on fuel system for aircraft. He was also research assistant at the University of Reading, where his interests were in the Humphrey Pump and development of appropriate technology for developing countries. After joining the Biogas Programme at the Development and Consulting Services, he researched on the wet type gas meter and the Humphrey Pump. He has published various papers and reports in this field.

Mamie M. Lau-Wong, B.Sc., Ph.D., received her doctorate in Chemical Engineering at Cornell University, U.S.A., where she specialised in culturing aerobic and anaerobic micro-organisms for industrial purposes, and computer simulation of fermentation processes in living ruminants. As consultant to the Development and Consulting Services of the United Mission to Nepal, she has been engaged in Biogas research and training, presented papers in Biogas Conferences, and published various papers in this field. She is also involved in the production and field testing of nitrogen-fixing bacterial fertilizer for cereal crops.

ACKNOWLEDGEMENT

Since its commencement in 1974, the biogas research, development, and extension work undertaken at the Development and Consulting Services has been financially supported by three agencies:

The United States Agency for International Development (Grant no.: 498-0251 (367-0139) (OPG) Nepal).

The Mennonite Central Committee, U.S.A., and

The Canadian High Commision Small Project Fund.

We would like to express our grateful appreciation to their assistance.

Written materials and diagrams used in Ch. 2, 5, 6, 7, and 9 in Vol. I are partly based on the "Guidebook on Biogas Development", published by the United Nations Economic and Social Commision for Asia and the Pacific. Their permission for the use of the material is gratefully acknowledged.

Besides the four authors, significant research and development were accomplished by Mr. Nick Peters. He pioneered in adapting the concrete dome plant for Nepal and developing the plastering system for making the dome gas tight.

Last but not least, credit goes to the staff of the Gobar Gas tatha Krishi Yantra Bikash Private Ltd., and to the many other Nepalis and expatriates whose cooperation has contributed considerably to this work.

PREFACE

For the past 30 years, the United Mission to Nepal has sought to meet the basic needs of people in Nepal, related to the areas of medical, educational and economic development. Its personnel have come from many different lands with various qualifications and skills, working toward the enablement of people by offering opportunity and training. There has been a mutual learning and sharing experience, resulting in projects and programmes which emphasise service towards others and the equitable sharing of benefits among the less advantaged and privileged.

Biogas is one area of the development and sharing of appropriate technology which is geared to making renewable energy resources available to those who need them. For the past 7 years, the Development and Consulting Services of UMN, at Butwal, has assigned and supervised the research and development of improved biogas plants and appliances, striving to make this equipment more efficient, effective and economical. Design work and production of biogas plants and appliances have been closely monitored by DCS engineers and technicians in the laboratory and workshops, as well as in the field. Testing of the performance of installed biogas plants and related equipment has been oriented to the customers on the farms of Nepal and it has been carefully monitored to ensure not only quality control, but also quality of operation.

This book describes the concept, purposes, implementation, constant revision, and implications of the whole process and its history. Amply illustrated and informative, the book records the achievements (and failures) of a dedicated task force which has persisted in a quest for advancing a technology, despite limited facilities. They have also gone beyond the mere mechanics and technicalities to address the economic, social and management aspects of biogas technology in the context of Nepal as a culture and society seeking development goals.

May I take the opportunity to commend the authors of this material for so ably documenting the biogas story and for the untiring efforts they have made. Commended also are the Tradesmen and Technicians of Nepal, without whose help much would have not been accomplished. This book is a testimonial to a joint venture of Nepali and Expatriate Cooperation at DCS in Butwal.

Kathmandu
January 1984

Al Schlorholtz
Economic Development Secretary
United Mission to Nepal.

BIOGAS RESEARCH AND DEVELOPMENT

PUBLICATIONS AND DRAWINGS

Available at the Development and Consulting Services, or the EDB Service Office, United Mission to Nepal, P.O. Box 126, Kathmandu, Nepal.

BOOKS AND REPORTS

United Mission to Nepal (1985) Biogas — Challenge and Experience from Nepal Vol. I and II.

Finlay, J. (compiler) (1981) Guidebook on Biogas Development. United Nations Energy Resources Development Series No. 21. Sales No. E. 80.II. F.10. (Available from the United Nations, Sales Section, New York or Geneva.

Paper reprints or microfiche available from National Technical Information Service, Springfield, Virginia, 22161, U.S.A.
The upper code is required for ordering reports. The lower code is a cost code, PC for paper reprints, and MF for microfiche on film.

Code No.	Report
PB83-162107 (PC A03/MF A01)	Finlay, J. (1978). Operation and Maintenance of Gobar Gas Plant.
	Finlay, J. (1980). 500 Cattle Dung Plants Built in Nepal in 5 Years: from Design Office to Field and Back Again. Paper presented at International Symposium on Biogas, Microalgae, and Livestock Wastes, Taipei.
	Finlay, J. (1978). Efficient, Reliable Cattle Dung Gas Plants. Paper presented at UN ESCAP.
PB83 - 166694 (PC A03/MF A01)	Pang, A. (1978). Economics of Gobar Gas.
	Bulmer, A. (1979). Community Gobar G Feasibility Study, Madhubasa.
	Bulmer, A. (1980). Initial Survey of Proposed Community Biogas Installation in Kusumgodai, Lumbini.
	Shrestha, P., and D. Fulford (1979). First, Second, and Third Inspection Visits to 95 Nepali Biogas Plants - 1976, 77, 79.
	Shrestha, P., and D. Fulford (1980). First Inspection Visit to 11 Dome-type Biogas Plants.
PB83 - 166991 (PC A04/MF A01)	Bulmer, A., and A. Schlorholtz (1979). Gobar Gas Survey in Nepal.
	Bulmer, A. (1980). A Survey of 3 Community Biogas Plants in Nepal.
	Fulford, D., & N. Peters (1978). Survey of Present Gobar Gas Work in India.
	Finlay, J. (1980). Night Soil Gas Plant.
PB83 - 166702	Fulford, D. (1981). Biogas, Farmers , and Development in Nepal.
	Fulford, D. (1978). Biogas in Nepal: State of the Art.
PB85 - 123305	Lau-Wong, M. (1982). Enhancement of Biogas Production in Cold Climate: Theoretical and Practical Aspects. Paper presented at the COSTED/UNESCO WORKSHOP ON THE MICROBIOLOGICAL ASPECTS OF BIOGAS PRODUDTION, Kathmandu, Nepal. May 31 - June 3, 1982.
PB85 - 123958	Lau-Wong, M. (1984). The Economics of Biogas Systems.
PB85 - 195477	Lau-Wong, M. (1984). The Development of Biogas in Nepal.
Paper Series:	Lau-Wong, M. (1985). Studies on the Dynamics of Biogas Processes. No. 1-5. (1) Modelling of Biogas Processes. (2) Analysis of the Kinetic Data of 3 Plant Designs Installed in Nepal and the Effect of Retention Time & Temperature. (3) The Effect of Slurry Moisture Content. (4) The Effect of Pressure on Gas Production. (5) Prediction and Optimization.

DRAWINGS

Floating Steel Drum Design — Drawing No.

(Nominal gas Production):	100cft	200cft	350cft	500cft
Gas plant constructn -straight type	D221/1	D228/0	D241/1	D161/1
Gas plant constructn -taper type	D225/0	D220/0	D239/1	D169/1
Gas Holder manufacturing details	D163/0	D164/0	D240/0	D256/1
Concrete floor constructn - straight	-	-	-	D163/1
Concrete floor constructn - taper type	D124/1	D125/1	-	D170/1
Water (condensate) removing device for gas pipes	D329/2	D329/2	D332/2	D332/2

Special Night Soil Plant, 350cft

Gas plant construction - straight type	D231/1
Gas holder manufacturing details	D230/0
Night soil plant site layout	2000-142/3

Fixed Concrete Dome Design

(Digester volume, m^3):	10	15	20	50 (not yet tested)
Gas Plant	D333/1	D334/1	D336/1	D335/1
Concrete dome constructn templates	D338/2	all same as $10m^3$		
Agitator (slurry mixer) manufacturing details.	D337/2	D337/2	D337/2	-

Extended concrete dome gas plant

Gas plant	2000-143/1
Steel moulds	2000-144/1

Tunnel Design:

TP8 ($7.7m^3$) gas plant construction, using bricks for walls	D452/1
Gas outlet pipe, manufacturing details	D437/3
Gas outlet pipe, simplified, manufacturing details	2000-119/2

Steel mould for curved roof pieces, manufacturing details:
Frame 2000-114/2 Details of frame 2000-115/2 Base plate 2000-116/2

Appliances and Accessories.

Hand tool for mixing slurry	D354/3
Slurry mixing machine construction	D229/2
Slurry mixing machine manufacturing details	D121/2 and D166/2
Gas burner, family size, 0.45 m^3 (16 cft) per hr.:	
manufacturing details	D221/1
castings	D222/2
Gas burner, large size, 0.90 m^3, plus 0.45 m^3	2000-111/1
Drain cock for condensate removal - galvanized iron pipe (½")	D453/3
- cast iron type (½")	D459/3
Main gas valve (½")	2000-108/3
Gas tap for connecting rubber pipe to burner (½")	2000-107/3
Gas pressure indicating guage 0-1300mm (0 to 51 inches)	D331/1
Gas lamp: assembly	2000-113/2
manufacturing details	2000-112/1
ceramic ventury	2000-118/4
Gas meter, acrylic plastic: rotor	D352/1
meter box and counter	2000-127/1
counter detail	2000-128/4

TABLE OF CONTENT

'Biogas — Challenges and Experience from Nepal' comprises two volumes: Vol. I is a practical guide for field workers, whereas Vol. II includes more theory and research work.

The authors of each chapter are listed below.

Vol. I

Ch.	Title	Author
1	Usefulness of Biogas Technology	David Fulford
2	Floating Steel Drum Design	John Finlay
3	Fixed Concrete Dome Design	David Fulford
4	Tunnel Design	John Finlay
5	Selection of Design, Size, Materials, and Site	John Finlay
6	Gas Piping and Accessories	John Finlay
7	Household Gas Appliances	John Finlay
8	Commercial Uses of Biogas	David Fulford
9	Starting, Operating, Servicing, and Safety	John Finlay
10	Improvements in Biogas Performance	Mamie Lau-Wong
11	The Economics of Biogas Systems	Mamie Lau-Wong
12	A Practical Guide to Community Biogas	Andrew Bulmer
13	Biogas Extension	David Fulford
14	Further Ideas for Biogas in Nepal	David Fulford

Vol. II

Ch.		
1	The Development of Biogas Technology	David Fulford
2	The Fundamentals of Biogas Process	Mamie Lau-Wong
3	The Effect of Operational Parameters on System Dynamics	Mamie Lau-Wong
4	Experimental Approach to Biogas Technology	David Fulford
5	Methods of Measuring Gas Production Parameters	David Fulford
5a	Experimental Techniques	Mamie Lau-Wong
6	Enhancement of Biogas Production in Cold Climate	Mamie Lau-Wong
7	Shape and Structure of Biogas Plants	David Fulford
8	Development of Community Biogas in Nepal	David Fulford

Cover Design : by Mamie Lau-Wong

Vol. I

CONTENTS

Chapter	Title	Page
1	Usefulness of Biogas Technology	1.2
	Biogas Process	1.4
	Uses of the Fuel Gas	1.5
	Uses of the Slurry	1.6
	Advantages and Disadvantages of Biogas	1.7
	Advantages on a Family Level	1.7
	Advantages on Community Level	1.7
	Advantages on National Level	1.8
	Biogas Plant Design Criteria	1.9
2	Floating Steel Drum Design	2.1
	Basic Design	2.1
	Sizes of Plant	2.1
	Construction Details for Floating Drum Designs	2.4
	Site Preparation and Digester Floor	2.4
	Digester Side Walls	2.4
	Partition Walls	2.7
	Deflector Ledge	2.8
	Centre Guide Pipe	2.9
	Inlet and Outlet	2.9
	Plastering	2.9
	Fabrication of Steel Gas Drum and Guide	2.9
	Central Support	2.12
	Steel Drum	2.12
	Cleaning and Painting of Steel	2.13
	Practical Experience of the Use of Steel Drum Plants	2.14
	Gas Pressure in Drum	2.14
	Night Soil Gas Plant	2.14
	Construction	2.16
	Inlet and Drains	2.16
	Operation	2.16
3	Fixed Concrete Dome Design	3.1
	Characteristics of Design	3.1
	Construction Details for Fixed Concrete Dome Design	3.3
	Site Preparation	3.3
	Making the Dome	3.3
	Inlet Pit, Turret and Gas Outlet	3.4
	Digging and Plastering the Digester Pit	3.8
	Plastering the Dome	3.8
	Slurry Reservoir and Outlet	3.8
	Completing the Plant	3.9
	Fabrication of Plant Components	3.9
	Practical Experience of the Use of Dome Plants	3.9
4	Tunnel Design	4.1
	Basic Design	4.1
	Plant Sizes	4.1
	Construction	4.3
	Site Preparation and Trench	4.4
	Tunnel Roof	4.4
	Slurry Reservoir	4.5
	Slurry Inlet	4.6
	Plastic Sheet Lining for Tunnel	4.6
	Use of Tying Strings	4.7
	Use of Plastics Pipe	4.7
	Gas Outlet Pipe	4.8
	Completing the Plant	4.9
	Practical Experience of the Use of Tunnel Plants	4.9
	Technical Possabilities	4.9

Chapter	Title	Page
5	Selection of Design, Size, Materials and Site	5.1
	Choosing a Design of Plant	5.1
	Selecting the Size of Plant	5.2
	Gas Production Calculations	5.3
	Building Materials	5.3
	Construction Techniques	5.4
	Construction Features	5.5
	Inlet Pit	5.5
	Inlet and Outlet pipes	5.5
	Slurry Overflow	5.6
	Slurry Mixing Tool	5.6
	Slurry Mixing Machine	5.6
	Addition of a Latrine	5.7
	Slurry Collecting Tanks	5.8
	Site Selection for a Biogas Plant	5.9
6	Gas Piping and Accessories	6.1
	Galvanised Iron Pipe	6.1
	Plastic Pipe	6.3
	Pipe Sizes	6.4
	Fluid Flow Down Pipes	6.6
	Water Traps and Removal Devices	6.8
	Gas Valves	6.8
	Plug Cocks or Quarter-Turn Valves	6.10
	Piston Valves	6.11
	Ball Valves	6.11
	Gas Taps	6.12
	Gas Valve Design	6.12
	Measurement of Pressure	6.13
	Testing for Leaks	6.14
7	Household Gas Appliances	7.1
	Biogas Used for Cooking	7.1
	Domestic Biogas Ring Burners	7.1
	Double Ring Biogas Burner	7.3
	Adjustment and Care of Stoves	7.3
	Biogas Used for Lighting	7.5
	Biogas Lamp Designs	7.6
	Adjustment and Care of Biogas Lamps	7.7
	Other Gas Burners	7.8
	Biogas Burner Design	7.8
8	Commercial Uses of Biogas	8.1
	Running Engines on Biogas	8.1
	Use of Biogas in Dual-Fuel Engines	8.2
	Use of High-Pressure Biogas in Dual-Fuel Engines	8.4
	Carburettors for Mixing Biogas and Air	8.6
	Use of Biogas for Milling	8.8
	Use of Biogas for Water Pumping	8.9
	Use of Biogas for Electricity Generation	8.11
	Biogas Used in Cottage Industries	8.13
9	Starting Operating, Servicing and Safety	9.1
	Slurry Consistency	9.1
	Slurry Mixing	9.2
	Filling a Biogas Digester	9.2
	Starting a Biogas Plant	9.3
	Operating a Biogas Plant	9.3
	Problems with Biogas Plants	9.6
	Servicing of Biogas Plants	9.8
	Painting a Steel Gas Drum	9.8
	Scum Removal	9.8
	Safety when Entering a Digester Pit	9.9
	Safety from Explosion	9.9

Chapter	Title	Page
10	Improvements in Biogas Performance	10.1
	Quantity of Feed Input	10.1
	Quality of Substrate	10.1
	Addition of Urine	10.3
	Pretreatment of Lignocellulosic Materials	10.3
	Composting Feed Material	10.4
	Effects of Toxic Materials	10.4
	Control of pH in Slurry	10.5
	Seeding of Slurry with Microflora	10.5
	The Effect of Temperature	10.6
	The Use of Agitation	10.6
11	The Economics of Biogas Systems	11.1
	Brief Survey of Techniques Used in Analysis	11.1
	Financial Analysis for a Domestic Biogas Plant	11.3
	Measuring Costs and Benefits	11.3
	Discussion and Sensitivity Analysis	11.4
	Financial Analysis of Domestic Plant with Credit	11.5
	Financial Analysis of Biogas Milling System	11.6
	Financial Analysis of Biogas Irrigation System	11.8
	Economic Analysis of Domestic Biogas System	11.10
12	A Practical Guide to Community Biogas	12.1
	People	12.1
	Community	12.1
	Questions Before a Plant is Planned	12.1
	How will the Project be Financed?	12.2
	How will Technical Follow-up be Provided?	12.2
	How is a Community Selected?	12.3
	Questions on Going to a Community	12.3
	The Political Dimension	12.5
	The Test	12.5
	The Management Committee	12.5
	Technical Aspects	12.6
	The Uses of Biogas in the Community	12.6
	The Use of Biogas for Milling in the Community	12.6
	The Use of Biogas for Community Irrigation	12.7
	The Use of Biogas for Community Cooking and Lighting	12.8
	Running the Biogas System	12.8
	Adding Latrines to Community Biogas	12.8
	Evaluation	12.9
13	Biogas Extension	13.1
	Organisation of Biogas Extension	13.1
	Planning an Extension Programme	13,2
	Construction Programme	13.3
	Organisation and Staffing	13.4
	Sales and Follow-up of Biogas Plants	13.5
	Biogas Extension in Nepal	13.5
14	Further Ideas for Biogas in Nepal	14.1
	The Extended Dome Plant	
	Mixing and Pumping Slurry and Night Soil	
	Bibliography	
	Expla	
	Acknowledgements	
	Glossary of Terms	
	Index	

LIST OF TABLES

Number	Title	Page
1.1	Gas Production for Different Dungs	1.5
1.2	Properties of Biogas	1.5
2.1	Characteristics of Floating Steel Drum Design	2.2
2.2	Dimensions of Drum Plants - Stright Ttype	2.4
2.3	Dimensions of Drum Plants - Taper Type	2.7
2.4	Material Quantities for Drum Plants	2.9
2.5	Dimensions of Steel Drums	2.12
3.1	Characteristics of Concrete Dome Design	3.2
3.2	Dimensions of Different Dome Plants	3.4
3.3	Material Quantities for Different Dome Plants	3.6
4.1	Dimensions of Two Tunnel Plants	4.1
4.2	Dimensions of Suggested Future Tunnel Plants	4.3
4.3	Operation of Existing Tunnel Plants	4.4
4.4	Suggested Operation of Tunnel Plants	4.5
4.5	Material Quantities for Different Tunnel Plants	4.6
5.1	Comparison of 3 Different Designs of Biogas Plants	5.1
5.2	Gas Consumption of Various Appliances	5.2
5.3	Materials for Standard Mixing Machine	5.7
6.1	Standard GI Pipe Sizes	6.2
6.2	Fittings Available for GI Pipe	6.2
6.3	Dimensions for Different Sizes of Dipper Pipe Water Outlet	6.8
6.4	A Selection of 'O' Rings Suitable for Biogas Valves	6.12
8.1	Values for Pressure Loss Coefficient (K) for Fittings	8.6
911	Recommended Feed for Different Biogas Plants	9.4
9.2	Problems Met when Starting a Biogas Plant.	9.5
9.3	Problems Met when Operating a Biogas Plant	9.5/6
9.4	Problems Met with Gas Equipment: Stoves and Lights	9.7
10.1	Microbiological Problems and Remedies	10.2
10.2	Carbon and Nitrogen Content of Feedstocks	10.3
11.1	Capital and Recurring Costs for a Domestic Plant (CP10)	11.14
11.2	Savings on Fuel, from a Biogas Plant	11.14
11.3	Financial Analysis - Domestic Dome Type Plant	11.15
11.4	Measures of the Worth of Domestic Biogas Plant	11.15
11.5	Irrigation Requirements by Crops	11.16
11.6	Financial Analysis - Biogas Milling System	11.16
11.7	Costs for a Biogas Irrigation System	11.18
11.8	Inout Requirement for Rice and Wheat Crop	11.19
11.9	Gross Profit from Extra Crop Yield	11.19
11.10	Comparison of Biogas Irrigation Systems - on biogas, diesel	11.19
11.11	Economic Analysis - Costs and Benefits Biogas System	11.20
13.1	Biogas Plants Built in Nepal	13.6
14.1	Characteristics of Extended Dome Plants	
14,2	Dimensions of Extended Dome Plants	
14.3	Material Quantities for Extended Dome Plants.	

LIST OF DRAWINGS

Number	Title	Page
1	Deforestation	1.1
1.1	The Energy Resource Problem	1.2
1.2	Use of Biogas Technology	1.23
2.1	Floating Steel Drum Gas Plant	2.1
2.2	Floating Drum Design SD100 (Straight Type)	2.2
2.3	Floating Drum Design SD100,200,250 & 500 (Taper)	2.5
2.4	Floating Drum Design SD200,350 & 500 (Straight)	2.6
2.5	Layout of Bricks for the Floor of Drum Plants	2.7
2.6	Building Gauge Used to Ensure Circular Walls	2.8
2.7	Method for Strengthening Brickwork above Ground Level	2.8
2.8	Gas Holder for SD100 and 200	2.10
2.9	Gas Holder for SD350 & 500	2.11
2.10	Gas Removal System Using the Central Guide Pipes	2.13
2.11	Night Soil Gas Plant	2.15
3.1	Displacement Principle of Operation of Dome Plant	3.1
3.2	Fixed Concrete Dome Design, Construction Drawings	3.5
3.3	Mud Mould for Dome	3.7
3.4	Steel Template	3.7
3.5	Scum Breaker	3.7
3.6	Gas Outlet and Pipeline	3.7
4.1	Tunnel Plant Design (TP 8)	4.2
4.2	Tunnel Plant Design with Plastered Trench	4.3
4.3	Inlet End Wall for Tunnel Plant	4.4
4.4	Precast Concrete Arch Sections for Tunnel	4.5
4.5	Partition Piece for the Outlet End of the Tunnel	4.6
4.6	Plastic Loops Welded onto Plastic Film	4.7
4.7	Use of Tying Strings to Hold Plastics Film	4.7
4.8	Use of Plastics Pipe to Hold Plastics Film	4.8
4.9	Gas Outlet Pipe and Clamps	4.8
4.10	Alternative Gas Outlet for Tunnel Plant	4.9
5.1	Details of Inlet Pit and Slurry Overflow	5.4
5.2	Slurry Mixing Tool	5.5
5.3	Slurry Mixing Machine	5.6
5.4	Detailed Drawings of Slurry Mixing Machine	5.7
5.5	An Example of Site Selection for a Biogas Plant	5.8
6.1	Different Pipe Installations, Showing Water Traps	6.1
6.2	Gas Flow Rate to Give Pressure Loss of 10 mm WG in Pipes	6.3
6.3	Gas Flow Rate to give 50 mm WG Pressure Loss in Pipes	6.4
6.4	Nomograph for Biogas Flow down Pipes	6.5
6.5	Drain Cock for Trapping Water in a Gas Pipeline	6.7
6.6	Dipper Pipe for Trapping Water in a Gas Pipeline	6.7
6.7	A Typical Design of Gate Valve	6.8
6.8	The Plug Cock Design Used in Nepal	6.9
6.9	Screw Action Piston Valve Designed in DCS	6.9
6.10	Lever Action Piston Valve Designed in DCS	6.10
6.11	A Typical Design of Ball Valve	6.10
6.12	Lever Action Piston Tap Designed in DCS	6.11
6.13	Two Designs of Water Manometer to Measure Gas Pressure	6.13
6.14	Pressure Indicator Design made in DCS	6.14
6.15	Measuring Gas Leaks During Pipeline Installation	6.14
7.1	Sketch of a Typical Indian Biogas Ring Burner	7.1
7.2	Sketch of the DCS Ring Biogas Burner	7.2
7.3	Detailed Drawings of DCS Biogas Ring Burner	7.3
7.4	DCS Double Biogas Ring Burner	7.4
7.5	Typical Indian Biogas Lamp	7.5
7.6	DCS Design of Biogas Lamp	7.5
7.7	Biogas Lamp Designed in China	7.6
7.8	Shapes of Lamp Regulator Needles	7.7
7.9	A Biogas Burner Used in Refrigerators and Irons	7.8
7.10	Flow of Biogas through Orifices at Different Pressures	7.9
7.11	Design of Biogas Burner with Variable Area Throat	7.10
7.12	Diagrams of Flame Structure and Ways of Flame Stabilisation	7.11

12

Drawings

Number	Title	Page
8.1	4 Stroke Cycle of a Diesel (Otto) Engine	8.2
8.2	Cooling System for a Dual Fuel Engine	8.3
8.3	Princle of Operation of a Preesure Regulator	8.4
8.4	Pressure Drop Across a Ball Valve, Partly Closed	8.5
8.5	Mixing Chamber Type of Carburettor	8.6
8.6	Ventury Type of Carburettor	8.7
8.7	Two Methods of Tensioning 'V' Belts	8.9
8.8	A Set of Design Curves for a Typical Centrifugal Pump	8.10
8.9	Biogas Irrigation Scheme	8.12
8.10	Suggested Design for a Heat Saving Boiler	8.13
12.1	Presentation of Information from a Sample Village	12.4

Letter	Meaning		Units	Page
a	Atmospheric Pressure	10330	kg/mm^2	6.15
A_o	Area of an orifice		m^2	7.9
A_p	Area of a flame port or pipe fitting		m^2	7.11
C	Gas production per kg. volatile solids		m^3/kg	5.3
C_d	Discharge Coefficient of an orifice		-	7.9
C_g	Calorific Value of biogas	5.14	kCal/l	7.10
d	Proportion of dry matter in feedstock		%	5.3
d_o	Diameter of an orifice		mm	7.11
d_t	Diameter of a throat		mm	7.11
D	Diameter of a pipe (see ID, OD, Ø)		m	6.6
f	Fraction of volatile solids in feedstock		-	5.3
f	Friction factor for fluid flow in a pipe		-	6.6
g	Acceleration due to gravity	9.81	m/sec^2	8.9
H	Height to which water is pumped		m	8.9
H	Heat supplied by a burner		kW	7.10
H_a	Heat available from a burner		kW	7.10
I	Area of land to be irrigated		ha	8.10
ID	Internal Diameter of a pipe or biogas plant		m	
k	Reaction constant for the production of biogas		day^{-1}	5.3
k	Constant related to the smoothness of a pipe		-	6.6
K	Pressure loss coefficient for fittings		-	8.5
L	Length of pipe through which fluid flows		m	6.6
m	Mass of feedstock put daily in a biogas plant		kg/day	5.3
M	Molecular weight of biogas	27.351	kg/mole	6.6
n	Number of hours/day a pump is used		hr/day	8.10
Ø	Diameter (internal or external)		m	
OD	Outside Diameter of a pipe or biogas plant		m	
p	Pressure of biogas		mm WG_2	6.3
p	Pressure of biogas		kg/mm^2	6.6
P	Power requirement for pumping water		HP, kW	8.9
Q	Flow rate of a fluid along a pipe		m^3/sec	6.6
Q	Flow rate of a fluid along a pipe		l/min	6.6
q	Pressure function		-	6.6
r	Entrainment ratio for a biogas burner		-	7.11
R	Retention time for slurry in a biogas plant		day	5.3
R_e	Reynold's number - measure of fl d flow		-	6.6
R	Gas Constant	8314	$J/kg/^oK$	6.6
s	Specific gravity of biogas	0.94	-	7.9
s	Scale factor - used with nomograph		-	6.6
S	Feedstock concentration in a biogas plant		kg/m^3	5.3
T	Absolute temperature (^oC + 273)		^oK	6.6
t	Time for biogas to leak from a pipe		min	6.15
u	Velocity of a fluid in a pipe		m/sec	6.6
v	Volume of slurry daily input in a biogas plant		m^3/day	5.3
v_g	Fluid velocity through a flame port		m/sec	7.12
v_v	Rate of loss of biogas through a leak		l/min	6.15
V	Internal volume of a biogas plant		m^3	5.3
V	Internal volume of a pipe		lit	6.15
V_w	Working volume of a displacement digester		m^3	

Table E.1 List of Variables used in the Book.

Letter	Meaning		Units	Page
VS	Volatile solids in feedstock		kg	
w	Depth of water in an irrigated field		mm	8.10
W	Volume of water available each day by pumping		m^3/day	8.10
W	Wobbe number of biogas	27.7	kJ/l	7.10
WG	Water guage - a measure of gas pressure		mm	6.4
Δp	(delta) difference between two pressures		mm WG	6.8
η	(eta) Efficiency of a biogas burner		-	7.10
η	(eta) Efficiency of a water pump		-	8.9
θ	(theta) Angle of opening of a gas valve		$\bar{o}$	8.5
μ	(mu) Viscosity of biogas	1.297×10^{-5}	kg/m/s	6.6
π	(pi)	3.14159	-	
ρ	(rho) Density of biogas	1.0994	kg/m^3	6.6
ρ	(rho) Density of water	1.0	kg/l	8.9
ϕ	(phi) Diameter (Internal or External)		m,mm	

Table E.1 List of Variables used in Book (cont.)

Various other letters: A to Z are also used to indicate linear dimensions (see Tables: 2.2, 2.3, 2.5, 3:2, 4.1, 4.2, 6.12).

EXPLANATIONS

The notation used in the drawings and equations in this book follows international practice as far as possible.

Almost all dimensions are shown in millimetres, with a gap between the metres and the millimetres, ie. 1 570.

A few dimensions (such as for GI pipe) are in inches, shown as: in or ".

Areas are in square millimetres: sq.mm or mm^2,
or in square metres: sq.m or m^2: 1 m^2 = 1,000,000 or 10^6 mm^2.
1 hectare of land area = 10,000 or $10^4 m^2$.

Volumes are in cubic millimetres: cu.mm or mm^3
or in litres: lit. or l. : 1 l = 1,000,000 or 10^6 mm^3
or in cubic metres: cu.m or m^3: 1 m^3 = 1,000 or 10^3 l.

Mass is given in kg, or tonnes (1 tonne = 1,000 kg.)

Flow rate is given in lit/min or m^3/sec. 1 m^3/sec = 60,000 lit/min.

Tolerances are not usually shown on drawings, but can be inferred from the way in which the dimensions are written.

Dimensions for masonry are shown rounded to the nearest 10 mm (1 570), which implies that the tolerance is: ± 5 mm.

Dimensions for machined parts, such as for gas stoves, are shown rounded to the nearest 1 mm (52), implying a tolerance of ± 0.5 mm.

Some dimensions are shown to the nearest 0.1 mm (12.3), implying a tolerance of ± 0.05 mm.

When a drawing is of the outside of an object, in elevation, only the outline is drawn. If an object is shown in section, to reveal internal details, the sectioned parts are shaded to indicate the material from which they are made. A key is given in Figure E.1.

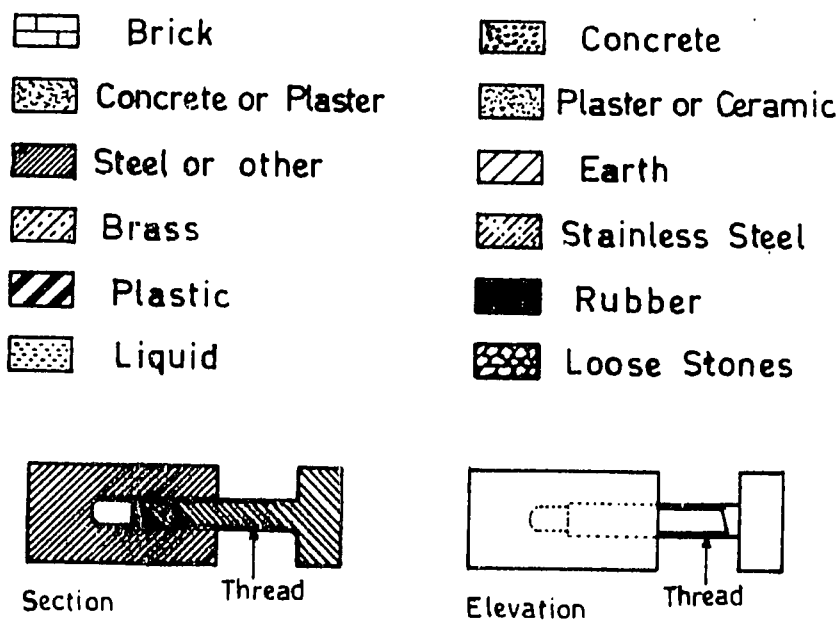

Figure E.1 A Key to the Shading of Different Materials used in Drawings; also to how Screw Threads are Indicated.

The Crisis in Nepal

by J. Poppe

17

Chapter 1. USEFULNESS OF BIOGAS TECHNOLOGY D. Fulford

The need for alternative sources of energy to those commonly used at present, such as petroleum oils or wood fuel, is now recognised by many people, especially those in the poorer countries of the world. The high increases in the price of oil-based fuels over the last decade has meant that a large proportion of the Gross National Product (GNP) of most non-oil producing Third World countries is being spent on these fuels. Energy is required to help the people of these countries to develop, but neither the majority of the people or the national economies of these countries can now afford to buy more oil-based fuels to form the basis for development.

A fuel crisis also exists in the supply of traditional sources of energy. Increasing population pressures mean that wood fuel from trees in most parts of the world is now being used faster than it can replace itself by natural growth (Agarwal). This demand for wood, coupled with commercial exploitation of trees for construction, pulping and other uses, means that forests are being destroyed at a high rate. Poor people lose out in two ways: not only cannot they develop, because of the high cost of petroleum fuels, but their traditional life-style is threatened as wood fuel becomes less available.

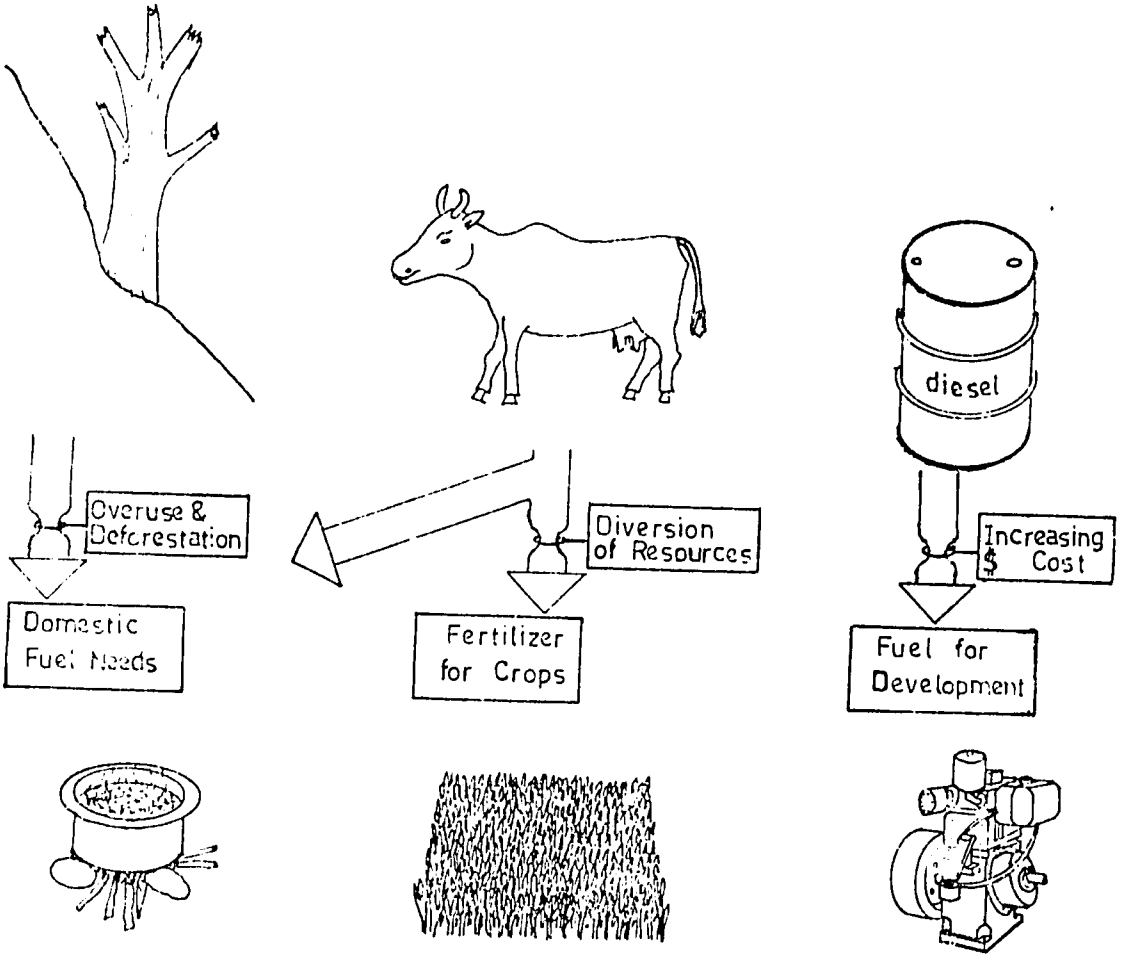

Figure 1.1 The Energy Resource Problem

As populations increase, more food must be grown, and more land used for agriculture. More fertilizer must be used to maintain the fertility of the soil. These demands make the fuel problem even worse, as new agricultural land must come from the forests. As wood becomes less available, people turn to other fuels, such as dried cattle dung and crop wastes, which could have been composted to give fertilizer. These fuels are also very inefficient, giving a poor smoky flame.

All these problems are present in Nepal, which is one of the poorest countries of the world. They are more complex, here, because of the geographical and socio-economic position of the country. Import of petroleum oils is expensive and difficult, as Nepal is land-locked and a terrain of steep rugged hills, with few roads, makes transport a problem. As forests are cleared, for wood fuel and cultivation, the steep slopes become unstable; top-soil is washed away in the monsoon rains and landslides destroy land, crops and homes. Increased water run-off on deforested slopes means floods further down-stream in the monsoon and less water absorbed and stored underground to supply springs and streams for the dry season. A natural cycle of flood and drought is intensified. People are not only short of fuel and food, but water also.

There is no easy solution to these complex problems. However, biogas is one technology that might provide the basis for a partial answer. A biogas plant can provide a good, efficient fuel, and also a well composted fertilizer from the same source of animal dung and crop residues. If biogas could be widely used in Nepal, and in countries in a similar position, people could use their dung and crop wastes for

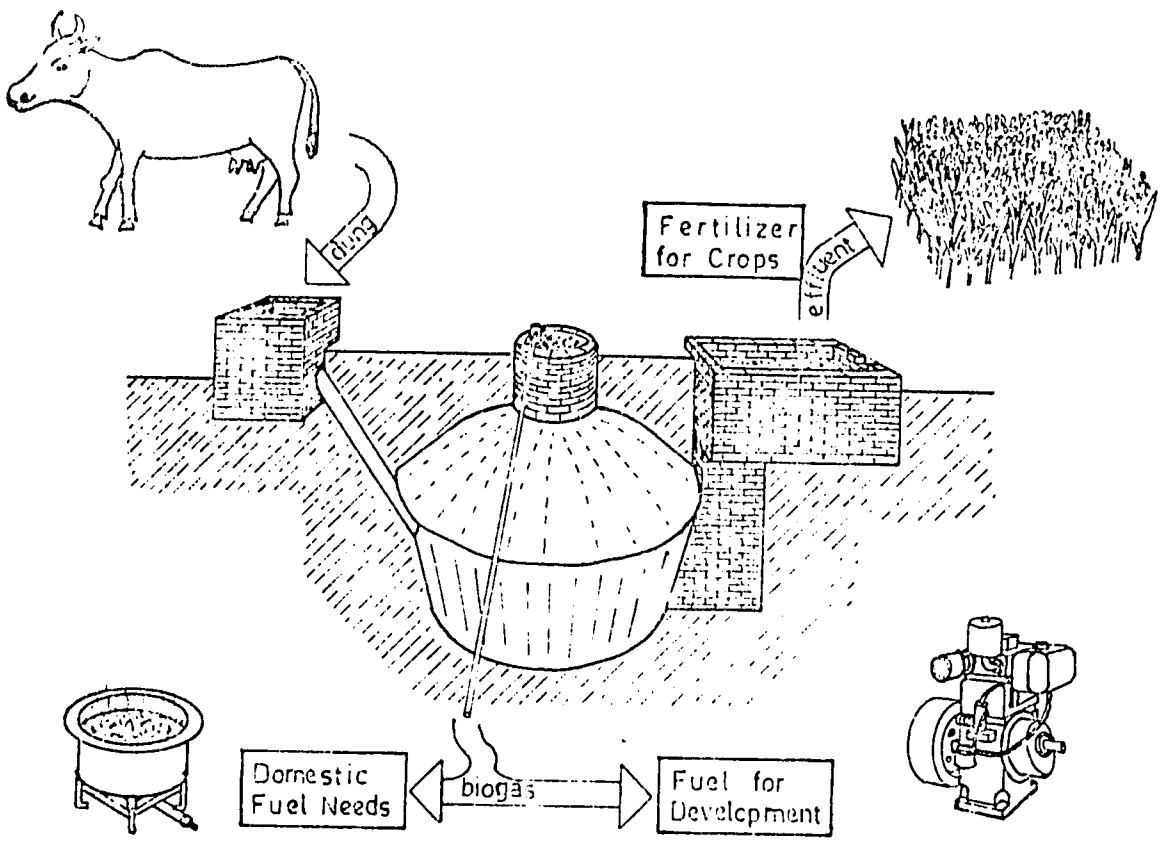

Figure 1.2 Use of Biogas Technology

fuel, in a way that would not deny their land fertilizer. Properly used, biogas would not only help people overcome problems caused by wood fuel shortage, but it could also provide energy for development. Biogas can be used to run cottage industries and other money earning activities.

The work of spreading a new technology, such as biogas, so it can be widely used in a country such as Nepal, involves many different activities. Development and Consulting Services of the United Mission to Nepal has been involved in this work since 1974, in both extension and in developing improved biogas technologies, and this book is a sharing of our experience.

Biogas Process

When a cow eats grass, it digests the food in its gut, after breaking it up with its teeth. The process of digestion, the breaking up of complex food-stuffs into simpler chemicals, is assisted by a population of bacteria that live in the cow's gut. Some of these bacteria are 'methanogens', which turn certain of these chemicals into gases, such as biogas. Some of these bacteria are excreted with the dung, and can continue the process of digestion if given the right conditions: similar to those in a cow's gut. If light and air are excluded and they are kept at a warm temperature (between 20° and 40°C), the bacteria will make biogas until their food (the substrate) is used up.

These conditions can be met in a hole in the ground, lined with brick or cement, to keep the mixture from leaking out, with a suitable arrangement for collecting the biogas. The correct temperature will only be found in tropical or sub-tropical areas, unless some system is used to heat the mixture of dung, foodstuffs and water (called a slurry) and to prevent heat loss.

Cattle dung, containing the right bacteria to give biogas, is the most commonly used feedstock. In India and Nepal, biogas is called 'gobar gas', as 'gobar' is the Nepali, and Hindi, word for cow dung, and it also has a special significance in the Hindu religion.

Other feedstocks can be used to produce biogas. Pig dung is also good, although it may not contain the correct bacteria. A 'starter', slurry from a working biogas plant, is required to start a new biogas plant using other feedstocks (Maramba). Chicken dung is also a good feedstock, although a large number of birds are required to obtain adequate dung (Table 1.1).

The raw material, from which dung is composed, is grass and other vegetable matter, so more gas could be obtained by adding undigested plant material to the biogas plant (up to 80% per kg. more: FAO 40). However, plant material contains lignin, a tough woody material that the bacteria cannot easily digest. If the vegetable matter is eaten by an animal, it is broken up mechanically by the teeth, and chemically by the action of acids and enzymes in the animal's gut. Some animals, such as horses and elephants, are less good at breaking down the lignin, so their dung, too, contains more woody, fibrous material. These fibres can cause blockages and other problems within the digester. Some plants such as water hyacinth, have little lignin, so are good feedstocks for biogas plants.

Dung from goats and sheep are rich in nutrients (Yawalker), but it is in the form of pellets that must be broken up mechanically before they can be used in a biogas plant. There are few reports of the use of such dung in biogas plants, probably becuase these animals roam freely and the dung is difficult to collect.

Anaerobic digestion (without air) can also be usefully used with wastes such as sewerage and effluents from industries that process plant and animal products. Such feedstocks usually have particular problems of

Animal	Dung/Unit kg/day	Biogas/Unit litres/day	Total Solid%	Volatile Solid%	Carbon %	Nitrog. %	C/N
Cow	14	400-480	16-20	77	36	1.8	20 (1)
Pig	5	280-350	25	80	38	2.8	14 (1)
Chicken (100)	7.5	420-510	48	77	56	3.7	10 (1)
Human	0.2	11- 14	15-20	90	48	7.1	7 (1, 2&3)

Table 1.1 Gas Production for Different Dungs
(Notes: (1)- Maramba, (2)- NAS, (3)- Makhajani)

their own and we have not had experience of them in Nepal.

Uses of the Fuel Gas

Biogas is a mixture of methane (50% to 70%) and carbon dioxide (50% to 30%), with small amounts of other gases, such as hydrogen sulphide, which causes the gas to smell. The methane is a fuel, and burns with a blue flame, but the carbon dioxide acts only as a dilutant. The gas is slightly acidic, if mixed with water, and can be corrosive. The relative proportions of the gases depend on the feedstock for the plant and the exact population of the bacteria in it. The properties of biogas are given in Table 1.2.

Biogas, assumed to be 58% Methane (CH_4), 42% Carbon Dioxide (CO_2), saturated with water vapour at 30°C and standard pressure.	
Calorific Value	5.14 kCal/lit. (4.8 to 6.2 range)
Effective Molecular Weight	27.351 (24 to 29)
Density	1.0994 kg/m^3 (.96 to 1.17)
Specific Gravity (Air 30°C)	0.94 (.82 to 1.00)
Viscosity	1.297×10^{-5} kg.s^{-1}.m^{-1}
Air to Fuel Ratio	5.5 : 1 (15% biogas) Stochiometric
Flammability Limits	9% to 17% biogas in air
Wobbe Number	27.7 kJ/litre

Table 1.2 Properties of Biogas
(Pritchard, Perry, Weast, Watson House)

The main use of biogas, at present, is for domestic purposes, such as cooking and lighting. Biogas can be used in suitable designed burners to give a clean, smokeless, blue flame, which is ideal for cooking. Biogas can also be used in specially designed lights, similar to 'Petromax' or other kerosene pressure lamps.

Biogas is a high-grade fuel, which means that it can be used in internal combustion engines. It is possible to use it in adapted petrol (gasoline) engines, with a spark plug to ignite the mixture. It is more usual to use it in "dual-fuel" engines, which are adapted diesel engines that still use 20% diesel, along with 80% biogas, to provide ignition. Biogas engines are usually stationary, used to drive equipment other than vehicles, as it is very difficult to store in a small space. It cannot be liquified in the same way as LPG, so it must be kept under low pressure in large balloons, or compressed to a high pressure to be kept in cylinders. Both have been done (FAO 41, Meynell) but not in Nepal.

There are many other possible uses for biogas. In Nepal, it has been used to run a refrigerator, of the absorption type, (Biogas, Nepal 5) and to heat an iron for pressing clothes. Larger sized biogas plants have been used elsewhere in small commercial operations, such as in processing animal products (Maramba), in distilling alchohol (FAO 41) and in drying crops, such as tobacco (UNIDO, 1980).

Use of the Slurry

Nutrients are needed by all living creatures. In a well designed farming system, much of the nutrients from plants eaten by animals and people are returned to the soil in dung. These nutrients are absorbed by the plants through their roots, so they must be soluble in water. Dung contains many plant nutrients, but it is only partly digested, and too concentrated to be used directly on the land. It is usually composted in some way, to allow micro-organisms (bacteria and fungi) to continue the process of digestion.

Anaerobic digestion in a biogas plant performs some of the functions of a compost pit, in that it breaks down the plant materials into simple chemicals that can be absorbed by the plants. However, it also concentrates the plant nutrients, so the effluent slurry must be diluted in some way. It also contains hydrogen sulphide, which is toxic to plants (Maramba).

In Nepal, the usual practice is to collect the biogas effluent into pits and allow it to dry. The toxic substances evaporate. The dried manure is then spread on the fields. Biogas effluent is free from odour, which a similar pile of raw cow-dung smells strongly. It does not give a good environment for flies to breed (Sathianathan). Anaerobic digestion also decimates populations of pathogenic bacteria and parasites in the dung. Some pathogens die quickly (McGarry), while others are reduced, but not destroyed (Hobson). Drying the effluent should complete the destruction.

However, drying the slurry means that plant nutrients, such as nitrogen are lost by evaporation into the air, and by leaching, as water drains from the slurry into the soil. The loss of nitrogen from dried slurry is 7% to 15% (Idnani), as opposed to 20% to 45% from a pile of raw cow dung (Yawalker). The sun drying of slurry takes up a lot of space, and is less effective in the monsoon season.

Digested slurry can also be introduced into irrigation canals, so the water washes it to the land (Biogas Nepal 13). In China, the slurry is sometimes sprayed directly onto the fields (FAO 41). The water dilutes the slurry and carries it to the crops and also reduces the toxicity of the hydrogen sulphide (Maramba). This approach means that slurry does not need to be stored, but it is only useful if the biogas plant is close to an irrigation canal. One problem, noticed in Nepal, is that more slurry is deposited near the mouth of the canal than the other side of the fields.

The slurry can also be added to dry plant material, such as straw or leaves (Idnani, Sathianathan). The dry material absorbs the water and plant nutrients and accelerates the drying.

The fertilizer value of the slurry, when it is treated in any of these ways, is reported to be good. One farmer in Nepal claims to be saving 80% of the urea that he puts on his crops. Other places report an increase in crop production of 13% after biogas slurry was used on the fields (FAO 41).

Other uses of the slurry include putting it into ponds as feed for algae, water hyacinth, fish or ducks; using it in hydroponics, where plants

are grown in a nutrient rich solution on a gravel bed; or even using it as a feed supplement for pigs and chickens, as it contains vitamins and growth promoting agents (Maramba).

Advantages and Disadvantages of Biogas

The primary advantage of biogas technology is that it can produce both a high grade fuel and a good manure from the same input of animal dung and crop residues. The spread of biogas technology in a country such as Nepal would have advantageous effects on local families, on communities and on the national level.

Advantages on Family Level

The immediate benefactors, when a family sets up a biogas plant, are the women, who do the cooking (Bulmer and Schlorholtz). When cooking fuel is available by just turning a tap and lighting a match, women prefer it to gathering wood, cutting it into pieces, lighting a fire and constantly attending it. A wood, or cow dung cake, fire is smokey, blackening the cooking pots, the kitchen and the cook's clothes and skin. Smoke also affects the eyes and lungs, causing irritation and making them more liable to disease. These things do not happen with biogas, so the women become more healthy and have much more time to look after themselves and the rest of their family.

One possible disadvantage of biogas is that insects can infest the roof beams and thatch of traditional houses, as they are not kept away by the wood smoke.

The value of the fertilizer is another advantage of biogas. In China, biogas plants are regarded as 'miniture manure plants' (FAO 40). The lack of smell and the lack of flies round the slurry are also benefits, as well as the decimation of pathogenic organisms.

Gas lights also help families who live away from electric light. Children can study in the evening, so literacy is improved; people could work at weaving or other cottage industries; people go to bed later, so biogas lights might have an effect on the birth rate.

The major disadvantage of a biogas plant for a family is the high capital cost for a poor family. The majority of people in Nepal could not afford to pay the cost of a plant (about Rs.9,000;$690, for a small family plant in 1982). Assistance in the form of loans and subsidies is available, but the purchase of a biogas unit is still a large under-taking for a poor man.

Also a poor farmer has to find enough feedstock for the plant. If the plant is fed on cattle dung, a family requires dung from 4 to 6 cattle, which is more than most people own. If the owner of the biogas plant cleans his plant out regularly, he can also use crop residues and plant material, but this is not common in Nepal.

Other problems are the need for water, with which to mix the slurry, and the reduction of biogas production in cold weather.

Advantages on Community Level

More people can benefit from biogas technology by setting up a community biogas plant, in which the cost of the plant and the task of supplying feedstock is shared among a group of poor villagers. The capital cost per volume of gas produced is reduced and the biogas plant can be used as a focus for development within a village or community.

Working together in the setting-up and running of a plant, villagers will build up a spirit of cooperation and unity. While this type of communal activity is difficult to start in Nepal, the Small Farmers' Development Programme (SFDP) has shown that it is possible, and can be successful (FFHC/AD; SFDU, FAO). Particular needs are for the people to

be properly motivated, so they understand exactly what is expected from them and exactly how each will benefit. (RAFE 36).

A larger sized community biogas plant can be used to drive engines for an income earning activity. Engines can be used to drive grain mills and irrigation pumps, both of which can make a good profit for the owners. Biogas engines can also be used to generate electricity, although this is not usually economically justified on a small scale. An 'add-on' electric generator to an engine used for another purpose could be used to provide lights for a village, especially as electric lights are far more efficient than gas ones. Village-based development activities attract young people in the villages and encourage them to stay at home rather than migrating to towns and cities to seek jobs.

Latrines can be attatched to biogas plants. While this is technically possible with a family sized unit, cultural factors suggest that it is easier to do in a community plant, especially if it is being used to run engines rather than cook food. Use of latrines with a biogas plant will improve sanitation and village health.

The disadvantages of a community plant arise if the members of the community fall out and disagree. This has happened in Nepal (Bulmer 1980) and India (Agarwal ; Roy), and the plants have become an expensive liability. Careful preparation, teaching and testing of the community is essential, even before the plant is built, if these problems are to be avoided.

Advantages on National Level

Biogas offers an alternative energy resource to wood fuel and petrol um oils. In the Nepali year 2031 (1974/75), the people of Nepal used a total of 6,530,000 metric tonnes of fuel wood (ERDG), mainly for domestic purposes, such as cooking and heating: an average of 550kg per person per year. Wood fuel is being used faster than it can grow: only 35% of the wood used in one mountain area of Nepal was estimated to have been replaced by natural growth in 1974 (SATA). The nett loss of wood from the area per year was about 1.2%, which is steadily increasing, as the population grows, and stock wood, from which new wood can grow, is lost. Under these conditions, the whole forest cover will be lost in 40 years or less. Present estimates suggest that only 10 years remain before Nepal becomes a treeless desert.

In 1974/75, only 1.5% of domestic fuel was composed of dung and crop residues. However, as wood fuel becomes less, people will turn to these fuels, depriving their land of much needed fertilizer.

Also in 1974/75, 28,712,000 litres of petroleum fuel of all types was used in Nepal (ERDG). In 1970/71, the value of fuel oil imports was Rs.71,733,000 ($6,030,000) (HMG/CBS). The cattle population in the same year was estimated as 10,010,000, producing 27,724,000 metric tonnes of fresh dung per year (ERDG). If all this dung could be used to produce biogas, the total theoretical yield would be about 1,136,000,000 cu.m This could, in principle, replace 4,806,000 tonnes of fuel wood, or 3/4 of all the fuel wood used in Nepal. Alternatively, it could be used to replace 433,000,000 litres of diesel, about 15 times Nepal's requirement in 1970/71. The value of this replaced oil would be over 2 billion rupees or about $700 million.

Of course, all this dung could not be used to make biogas; much is dropped directly on the land as cattle go out to forage for food. Even if 40% could be used, biogas technology could have an important impact on the economy of Nepal. If the dung from other animals, such as pigs, and human faeces and crop residues could be used as well, the potential impact of biogas technology would be even greater.

Biogas can replace wood fuel; if this can happen on a large enough scale trees and forests can be conserved. If forsts were allowed to regrow on the steep mountain slopes of Nepal, then the impending ecological

disaster could be averted. His Majesty's Government of Nepal (HMG/N) does recognise this, and is considering giving subsidies to all people who will install a biogas plant in Nepal.

The main difficulty in the extension of biogas technology on a national scale is in the setting up of suitable organisations for construction, for funding loans and for the follow-up of people who have installed plants, so they can be trained in their use. Government bodies have many different priorities; the introduction of a new technology has to compete with many well-established concerns. However, despite such obstacles, the biogas extension programme in Nepal has become established and is growing steadily, if not as fast as was first hoped.

Biogas Plant Design Criteria

There are many different designs of biogas plants available worldwide (Maramba, Pyle, Jewell) and most will work. However, in choosing suitable designs for use in a developing country such as Nepal, certain criteria limit the number of types that can be considered suitable.

Underground designs, built in a hole in the ground, are cheaper and easier to build. The soil itself can be used structurally, to support walls against the hydraulic and pneumatic pressures of the slurry and gas. Also, such plants are easier to insulate against cold weather. Inlet and outlet pipes should be straight, for easy cleaning and any effective design should be easy to clean out and empty, in case of problems such as scum formation.

Traditional building materials, such as mud and "lipnu" (mud mixed with cow dung), are not suitable for biogas plants, as water and gas leak through them. Wood is also not suitable, as it is very difficult to make gas tight and it can be destroyed by insects or rot. Materials such as brick and cement are expensive, so, while they must be used, the biogas plant design must be carefully made to minimise the quantity. Reinforced concrete is normally too expensive.

Since rubber and plastic must be imported into Nepal, they can be almost as expensive as the steel required to do a similar job. They can also be damaged by rodents and by sunlight and during transit by sharp objects. Even steel is not an ideal material, as it is also expensive and can be corroded by the biogas slurry.

The designs used in Nepal are therefore constructed mainly with brick or stone masonry, or with cement plaster, using the sides of the underground hole for structural support. Three such designs are described in the following chapters.

Basic Design

The floating steel drum biogas plant was developed in India. When D.C.S. started its biogas work in 1974 this was the only known biogas plant design. After studying it at institutions and in villages in India it was accepted for use in Nepal.
The slurry is kept in a masonary lined well like structure and the biogas collects in a steel drum which floats mouth downwards in the slurry. (Fig.2.1). As gas collects or is used, the gas holder floats up or down accordingly.
The D.C.S. design has not altered the basic principle but there are significant differences in construction details. These changes have been made to simplify construction and reduce construction and plant maintenance costs.
There are two versions to the D.C.S. design. The straight design (Fig.2.3 and 2.4) is mainly used where bricks are not available and stone masonry is used and or the water table is low allowing a deep hole to be dug. The taper design Fig.2.5 is mainly used where bricks are available and especially if the water table is high because it needs a shallower hole. It is much cheaper than the alternative commonly recommended horizontal plant which requires reinforced concrete. Both designs use exactly the same amount of bricks, sand and cement and use identical gas holders.
Of the two designs, the taper one is most commonly used in Nepal due to the high water table and availability of bricks in the plains where most plants are built.
A major improvement has been to change the method of taking the gas from the gas holder. Commonly a flexible pipe is used to join the gas holder to the main gas pipe. This pipe degrades in sunlight, often leaks at the ends, collects condensate till the pipe blocks and it also prevents the free rotation of the drum, necessary for the mixing of the slurry.
The D.C.S. design (Fig.2.2) allows the gas to be removed via the central guide pipe. It thus eliminates what was a major maintenance problem as well as a rust problem on the central guide because it is now closed to the atmosphere. It also enables the drum to be freely rotated for breaking up of scum. This design has been used exclusively in Nepal since 1976 and is very successful.

Size of Plant

From the beginning D.C.S. decided not to build any plants smaller than the SD100 because it was economically unattractive. For the sake of standardization it was decided to have four sizes (SD100, SD200, SD300 and SD500) producing nominally 100, 200, 300, and 500 cu.ft. (2.8, 5.6, 8.5 and 14.1m^3) of biogas per day. No larger plants were built because the required drum would become very heavy necessitating truck access to the site and also lifting equipment. The SD200 size is the most popular size in Nepal.

Best Available Document

26

Under Nepali conditions of cooking two main meals plus lighting in the evening, it has been found that drums holding about two thirds of the daily gas production are suitable. In designing digester volumes and using available information at that time it was assumed that 1kg. cattle dung mixed one to one with water gave 37 litres of gas, held at a temperate temperature for 50 days. The digester volume was made a bit larger to allow for any unmoving dead volumes of slurry forming inside the digester. Subsequent research (vol.II chap.5) has shown that the gas availability is very temperature sensitive, so that the nominal daily gas production is rather meaningless. The characteristics of the various sizes of plant and realistic daily gas production at different slurry temperatures is given in table 2:1. Under local conditions the slurry temperature for most of the year is around 25°C.

Plant type	SD100	SD200	SD350	SD500
Digester volume m^3	7.1	15.0	24.3	34.0
Gasholder volume m^3	1.7	3.4	6.0	8.5
Input dung per day kg	60	120	210	300
Theoretical retention time days	59	58	56	57
Realistic retention time days	50	50	50	50
Nominal gas production per day m^3	2.6	5.6	9.9	14.1
Realistic gas production per day m^3 at:				
Slurry temp. 30.1°C	2.7	5.5	9.5	13.3
Slurry temp. 25°C	1.7	3.4	5.9	8.4
Slurry temp. 20.3°C	1.3	2.5	4.4	6.3

TABLE 2.1 Characteristics of Floating steel drum design

Input : cattle dung mixed 1:1 with water.

Construction details for floating steel drum designs

Detailed drawings are given in Figures 2.3, 2.4 and 2.5. The dimensions indicated by letters are given in Table 2.2 for the straight type and in Table 2.3 for the taper type. Material quantities for all drum plants are given in Table 2.4.

Building Materials

These are common to all plants. Details are given in chapter 5.

Dimension (millimetres)	Ident.	SD100	SD200	SD350	SD500
Depth of Digester	A	3 620	4 630	4 930	5 540
Deflector ledge to top	B	1 050	1 270	1 270	1 500
Depth Lower Section	D	2 570	3 360	3 660	4 040
Diameter of Pit	E	1 600	2 000	2 600	3 590
Diameter at Ledge	F	1 300	1 700	2 300	2 600
Diameter of Hole	H	2 060	2 460	3 060	3 360
Inlet Pipe Length	I	3 800	4 800	5 000	5 800
Outlet Pipe Length	J	-	4 600	4 900	5 500
Pipe Opening from Wall	M	700	400	400	690
Mixing Pit Length & Breadth	P	610 x 460	700	1 000	- *
Deflector Ledge to inlet	R	1 200	1 470	1 470	1 700
Deflector Ledge to outlet	S	950	1 170	1 170	1 400
Depth of hole	T	3 390	4 400	4 700	5 310

TABLE 2.2 Dimensions of Drum Plants - Straight Type (Figure 2.3 and 2.4)

* Note: The SD500 size uses a mixing machine (dimensions in chapter 6)

Dimension (millimetres)	Ident.	SD100	SD200	SD350	SD500
Depth of Digester	A	2 520	3 090	3 300	3 770
Deflector Ledge to top	B	1 030	1 270	1 270	1 500
Depth Taper Section	C	910	910	1 220	1 220
Depth Lower Section	D	580	910	810	1 050
Diameter Upper Section	E	1 600	2 000	2 600	2 900
Diameter of Ledge	F	1 300	1 700	2 300	2 600
Diameter of Lower Section	G	2 500	2 900	3 900	4 230
Diameter of Hole	H	2 960	3 360	4 360	4 690
Inlet Pipe Length	I	2 320	2 540	3 150	4 000
Outlet Pipe Length	J	2 170	2 740	2 950	3 370
Mixing Pit Depth	K	410	460	460	- *
Mixing Pit Length	P	460	600	850	-
Mixing Pit Breadth	Q	610	610	1 200	-
Deflector Ledge to Inlet	R	1 170	1 470	1 470	1 700
Deflector Ledge to Outlet	S	930	1 170	1 170	1 350
Depth of Hole	T	2 500	2 850	3 070	3 540

TABLE 2.3 Dimensions of Drum Plants - Taper Type (Figure 2.5)

* Note: The SD500 size uses a mixing machine (dimensions in Chapter 6).

Plant Type	SD100	SD200	SD350	SD500
Cement kg.	450	800	1150	1550
Sand m^3	2.20	3.86	5.52	7.50
Bricks	3,000	5,000	7,500	10,000
Cement Pipe (GT)(m)	3.8	9.4	9.9	11.3
(Tp)(m)	4.6	5.7	6.1	7.4

TABLE 2.4 Material quantities for Drum Plants

Digester Floor.

Experience in Nepal, having built hundreds of these plants, is that a concrete floor is hardly ever necessary. Masonry floors are much lower cost and quite adequate in almost all cases. If the ground condition at the bottom of the pit is poor, i.e. muddy or soft sand, then a layer of broken bricks or stones must be pounded in until the ground is firm. The masonry floor can be built on top of this. Alternatively, a concrete floor can be laid.

The floor should be reasonably level. Bricks are laid on edge (not on their face) as in fig. 2.6. This method gives sufficient strength because the weight of the walls is not significantly greater than the weight of soil removed.

Side Walls

The side walls are circular and they are quick and easy to build using a building gauge (Fig. 2.7). The gauge is marked to indicate the different radii used in the plant (E/2, F/2, G/2). The partition wall can be completed after the gauge is removed, or alternatively it can be built slightly off centre.

It is essential to backfill the space between the walls and the sides of the hole with dug out earth after each 300mm of wall has been built. The earth must be rammed thoroughly into place with a piece of wood and water can be added to compact the soil. A major reason for biogas plant walls breaking is that this backfilling job has not been done properly.

Normally digester walls are not built more than 350mm above ground level. In certain cases, such as if the water table is very high, the plant must protrude more than this out of the ground. The brickwork must then be strengthened by tightly tying 3mm wire round every second course of bricks, and plastering over it to prevent rusting, (Fig.28). Earth must be backfilled to more than 1 metre around the bricks, at deflector ledge level. A disadvantage of this approach is that the input dung and water must be lifted up to put them in the plant.

Partition Walls

Central dividing walls are commonly used in most plants, except 3D100 straight type. The wall is designed to control the flow of the slurry, but some tests on 3D100 taper type and 3D200 straight types, with and without partition walls indicates no noticeable difference in gas production.

As the wall only controls the flow of slurry, it requires no structural strength, so a half-brick wall (120mm) is used. It is built to the top level of the deflector ledge.

Deflector ledge

This ledge deflects gas produced at the sides of the digester into the gas holder. A plant without this ledge would lose about 10% gas, or more in the case of taper type plants. The ledge is made to protrude about 100mm inside the gas holder circumference and should be wide slot. It can be used as a convenient datum from which to make several important measurements.

i) From top of ledge to top of digester pit walls : the height of the sides of the gas holder plus 20 - 150mm.

ii) From top of ledge to mouth of inlet pipe : the height of the sides of the gas holder plus 175 - 300mm. This gives sufficient head for the slurry to run quickly and easily into the digester.

iii) From the top of the ledge to the mouth of the outlet pipe : the height of the sides of the gas holder minus 50 - 80mm. This avoids the slurry coming over the top of the digester. When the slurry enters the plant daily the level of the slurry in the digester rises quickly and then lowers slowly as the effluent comes out of the outlet.

Central guide pipe

The central guide must be vertical otherwise the gas holder may not move up and down freely. It is held in position by two cross supports made of steel rod which are cemented into the side walls.

A gap of 50mm is normal between the gas holder and the side walls. When building the walls above the deflector ledge it is helpful to use a measuring rod from the central guide to the walls in order to get the right radius. The length of the measuring rod is : radius of gas holder plus 50mm minus radius of central guide.

Inlet and Outlet

The lower end of the inlet and outlet pipes are placed about in the centre of their respective compartments (M away from the walls). This position is not vital but it is important that the slurry moves at the bottom of the digester and that dead volumes of unmoving slurry are not allowed to form.

The mouths of the pipes are set above the floor of the digester (350mm for the inlet pipe and 250mm for the outlet pipe). This facilitates the clearing of blockages by rodding and also provides some volume in which sand and stones etc get in the plant and build up over a period of years. The inlet height is higher than the outlet

because it is more likely that stone sand etc will enter the plant by this pipe. Outlet pipes above ground level usually have bricks around them, to protect the cement pipe from accidental damage. The D100 straight type plant has no outlet pipe, and the slurry overflows from a notch in the top of the digester wall (fig.5.3). Outlets usually have a channel running from them to nearby compost pits, slurry collection pits or irrigation channels.

Plastering

If the masonry work has been done well then there is no need to plaster the inside of the digester. If a plaster was used it would significantly reduce the volume of the digester and increase the cost. The slurry level will always be higher than the ground water level, therefore any water movement will be from the digester outwards. The fibre matter in cattle dung will enter and basically seal any small holes or cracks. It is quite common to put a thin plaster on the exposed masonry work. This is only for decorative purposes.

Fabrication of steel gas drum and guide

The gas holder is a welded steel construction with a steel frame at the open end (fig.2.9 and 2.10). It can easily be made in a workshop with simple welding facilities.

Central support

The design is detailed in figures 2.9, 2.10, and dimensions given in table 2.5. The length of pipe is about twice the drum side height to ensure proper support when the drum moves up and down. This guide pipe has a 25mm smaller diameter than the pipe in which it fits in the drum. It was found that closer fits could prevent free movement due to scum accumulation. The pipe is held by two clamps on cross supports made from 16mm steel rod, bolted together with two bolts each. The ends of the cross supports are bent over to provide a good anchor in the sidewalls of the plant. The lower end of the pipe is closed and a socket is welded on near the bottom. The gas pipe is attached to this socket. This design has been trouble free.

31

Dimension (millimetres)	Ident.	SD100	SD200	SD350	SD500
Diameter of Drum	N	1 500	1 880	2 500	2 800
Height of Drum Side	S	1 000	1 220	1 220	1 400
Height to Slot	S_1	950	1 190	1 220	1 410
Height Centre Above Side	P	65	90	115	130
Diameter of Top Plate	X	1 510	1 890	2 510	2 810
Width of "V" Notch	Z	18	27	35	38
Drum Guide Pipe Length	U	1 630	2 000	2 030	2 330
Support Guide Pipe Length	V	1 900	2 2[illegible]	2 300	2 600
Radius of Support Frame	Y	970	1 150	1 490	1 650
Length of Support Frame	Y_1	910	1 100	1 440	1 600
Length of Studs in Drum	J	700	890	1 185	1 335
Hole for Ins. (Socket Size)	C	27(½"GI)	33(¾"GI)	33(¾"GI)	38(1"GI)
Radius of Scum Breaker	R_1	140	130	1 010	1 190
Length of Scum Breaker	L_1	1 050	1 290	1 200	1 375
	R_2	560	385	220	270
	L_2	1 015	1 270	1 275	1 465
	R_3	260	640	615	730
	L_3	1 040	1 245	1 235	1 420
	R_4	420	255	485	575
	L_4	1 025	1 290	1 250	1 435
	R_5	-	510	875	1 035
	L_5	-	1 260	1 210	1 390
	R_6	-	765	90	115
	L_6	-	1 230	1 285	1 475
	R_7	-	-	745	880
	L_7	-	-	1 225	1 405
	R_8	-	-	355	420
	L_8	-	-	1 260	1 450

TABLE 2.5 Dimensions of Steel Drums.

Steel drum

In the centre of the drum is a guide pipe which rides on the central support. It is just over 1½ times the height of the drum side and closed at the top end. Two slots 100 x 50 are made just below the roof of the drum to allow gas to pass. Holes are not used as these could get blocked with scum.

The top of the drum is coned shaped, about 1:10, to allow rain water to run off. The cone is made by making the top plate slightly larger in diameter than the diameter of the drum, cutting a "V" shaped notch from the side to the centre and pulling the sides of the "V" together and welding.

Scum breaker bars (length L) are welded between the radial struts on the bottom frame and the top plate, at varying radii (R) from the central pipe.

All drums are tested for leaks prior to painting by filling them with water. Any leaks must be welded.

Cleaning and painting of steel

The gas drum is made from mild steel which, while it is easy to work and weld, is subject to rust especially on the sides which dip in and out of the slurry twice a day. Good quality steel sheet should be used, as free as possible from rust, with no pitting or deep corrosion and it must be properly cleaned and painted. Hand cleaning, with wire brushes and sandpaper, is hardly adequate, although this system has been used due to the lack of an alternative. Ideally the finished gas drums should be sand blasted to remove all the grease, rust or millscale (a black or dark blue oxide layer). This method should give a paint lifetime of three times longer than for hand cleaned steel.

After trying various paints it has been found that bituminous paints give the most effective protection to gas drums. Anti-saline metallic primer is used, which incorporates aluminium, with a dry film thickness of 30 microns (DFT) followed by one coat (100 microns DFT) of High Build Black paint (incorporating Bitumen and Phenolic resins). A second coat is applied after the drum has been transported to the site where it is to be used, to repair any scratches, and to increase the paint thickness. The paint is applied by brush, as it is too thick to be applied with an air spray gun. This type of paint must not be over thinned as too much thinner breaks down the paint and causes it to crack badly after drying for some time.

If available, high pressure airless spray painting machine can be used. In this case a first coat of primer paint should be applied as a "mist coat", so thin that it can be seen through. This gives an excellent adhesion to the steel. It should be followed by a second coat (30 DFT) of primer.

In Nepal drums are now sandblasted on the outer sides and then airless spray primed.

Maintaining gas holders

Rust is a serious problem and gas holders can rust out in a few years if not properly painted and maintained. It cannot be stressed too much that gas holders need to be painted yearly and more frequently if signs of rust are seen.

Practical experience of the use of steel drum plants.

Three follow-up surveys have been done on the first 33 biogas plants built to the KVIC taper design in Nepal. Most of these early plants used a flexible plastic pipe to remove the gas.

On the basis of these surveys four improvements were made.

1. The flexible plastic pipe was found to be a serious maintenance problem. In all plants built after wards the gas was removed through the central guide pipe, the method described in this chapter. This has overcome the problem.

2. [illegible] on the [illegible]er. This was due to [illegible] sheet steel being used, combined with lack of proper [illegible] and inappropriate paint. Most drums were showing signs of corrosion after six months. Better quality sheet was used for new [illegible] and a more appropriate paint. Currently drums are grit blasted on the [illegible] and airless spray painted with bituminous paint as specified above.

3. [illegible] of the [illegible] [illegible]. The [illegible] was loose backfilling between the [illegible] walls and the [illegible]. [illegible] the monsoon season it [illegible]. [illegible] backfilling stressed to the [illegible].

4. [illegible] especially in the cold season. Following research it is now possible to [illegible] production from cattle [illegible] under different conditions (Vol. [illegible]), and to recommend ways of improving gas production (chap. 10).

Gas pressure in drum

Biogas appliances are usually designed for a gas pressure of 70 to 90mm water gauge (WG). This pressure is provided by the weight of the drum rising on the drum it covers which is its cross sectional area. Weights can be [illegible] the drum if the pressure is too low. The method of measuring the pressure is given in chapter 6. The pressure from any drum of known weight (either by calculation or actual [illegible]) is obtained from the formula:

$$\text{Gas Pressure} = \frac{\text{weight of drum (kg)}}{\text{cross sectional area (m}^2\text{)}} = \text{mm WG}$$

If the pressure is too low and weights need to be added it can be calculated from the formula.

$$\text{Weight} = \text{cross sectional area (m}^2\text{)} \times \text{required increase in pressure (mm WG)} = \text{kg}$$

Night Soil Gas Plant

One night soil (human waste) gas plant suitable for daily use by 350 people in an institution was built in [illegible]. The plant was a specially modified floating steel drum [illegible] (Figure 2.11).

Digester design

The waste production per day per person using the system was assumed to be 2 litres including [illegible] and expected to produce 20 litres of gas. (The toilets were a dry type modified [illegible]). This meant that the digester had to be considerably larger than the size of a cattle dung plant designed to produce the same amount of gas.

Best Available Document

Further, because the plant was in a cool place the residency was increased from 50 to 60 days.

Digester capacity 350 people x 2 litres per day per person x 60 days = $42m^3$

The gas holder was designed to fit into a water filled annular slot.

This water seal was for odour and fly control and to protect the steel gas holder from rust as night soil is more corrosive than cattle dung.

Digester construction

This was similar to a cattle dung plant with a few changes as given below.

Digester walls

These were not plastered but this was a mistake because, unlike cattle dung slurry, there are no fibres to fill up pores in the brickwork and the input is very watery.

Inlet pipe

The mouth of this was 500mm above floor level so as to provide extra accommodation for any sand, soil or stones which might get into the plant.

Annular slot

It proved difficult to make this slot water tight. Eventually it was plastered using a mixture of cement and acrylic plastic emulsion. The method was identical to that used for making fixed concrete domes gas tight. Water has to be added during the dry season to make up for evaporation losses. Oil can be poured on the surface to stop mosquitos breeding.

Gas holder

This had to be specially designed because of the annular slot. It also had many mixing bars because the night soil slurry tends to form a thick scum which needs to be broken up by rotating the gas holder.

The expected daily gas production was 350 people x 26 l. per person = $9.6m^3$

The gas holder was made to hold a volume of $6.1m^3$.

Other details

Drains from latrines

One held 150 wide and 250 deep and sloped at 1:70 worked well. They were covered by bricks. Normal 100m pipe was unsatisfactory and blocked frequently.

Mixing tank

This was made to the same principle as the cattle dung mixing machine. Night soil and flush water ran into the mixing tank which was designed to hold the daily input. At the entrance a large heavy steel mesh basket was fitted to collect any cloths, corn cobs etc. This proved effective. A two level overflow was also used. The lower hole, fitted with heavy coarse steel mesh allowed excess liquid to pass while withholding floating sewerage. Should this block up, the upper section became operative which allowed everything to pass while controlling where it went. The sand and gravel collecting channel worked well and collected a surprising amount of material.

35

The night soil slurry is much more corrosive on the steel parts of the mixing machine than is cattle dung. Probably bituminous paint should have been used instead of red oxide paint.

Spent slurry

This is grey in colour, odourless and does not attract flies. Having been digested it is much safer to work with than raw night soil as a high percentage of bacteria are killed in the digester.

Gas

This burns in the same way as gas produced in a cattle dung plant but it has a stronger hydrogen sulphide odour prior to burning.

Starting up the plant

Before feeding in night soil one truck load of cattle dung mixed with water was put in the plant. This was to establish the right bacteria in the plant.

Best Available Document

GOBAR GAS PLANT

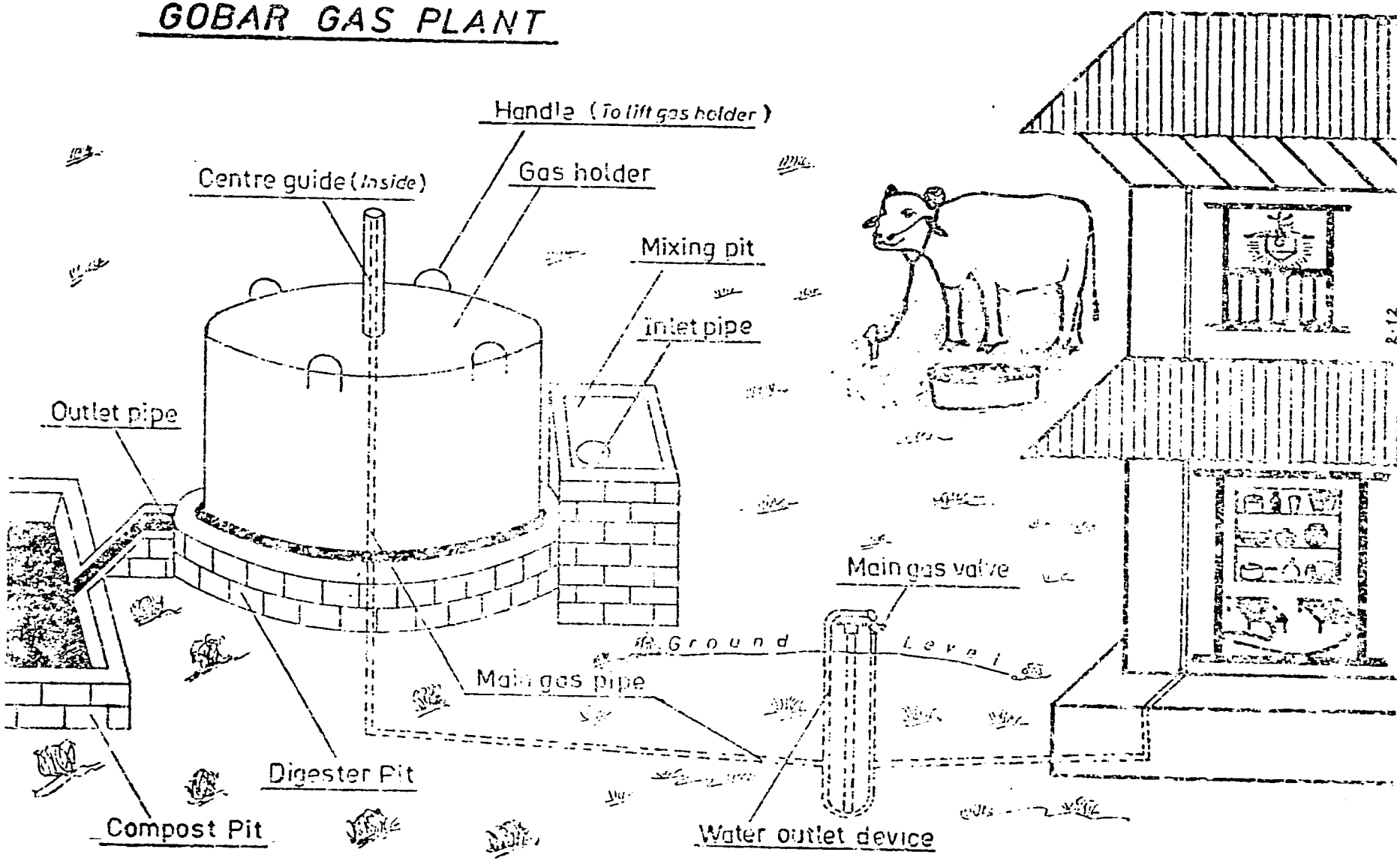

Figure 2.1 Floating Steel Drum Gas Plant

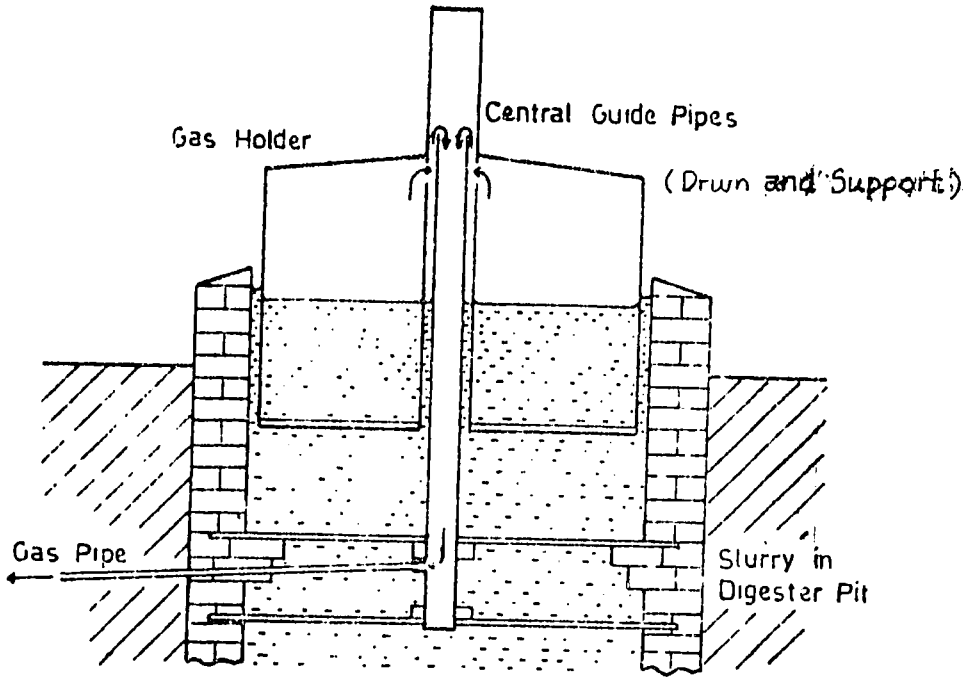

Figure 2.2 Gas Removal System Using the Central Guide Pipes

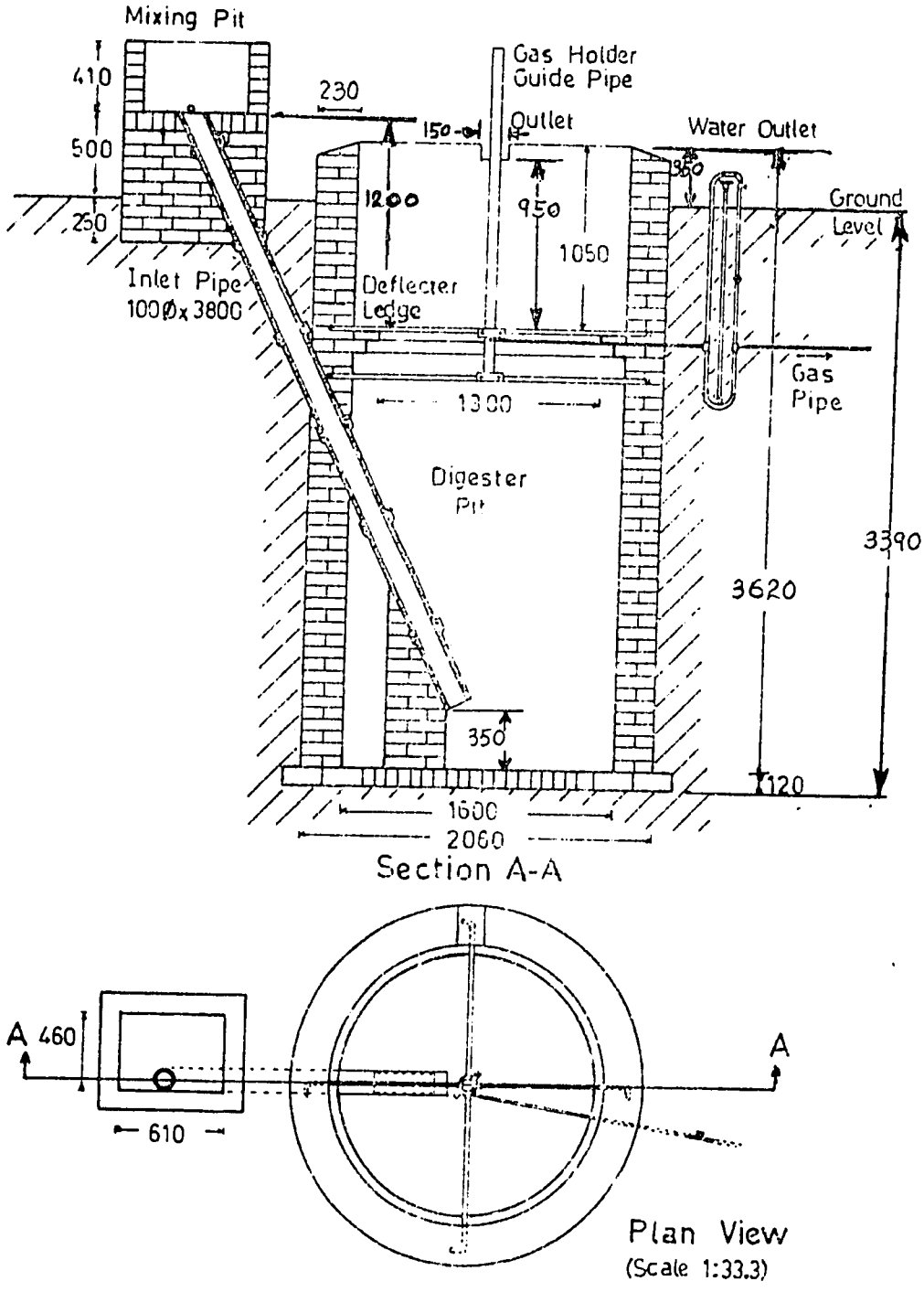

igure 2.3 Floating Drum Design SD100 (Straight Type)

39

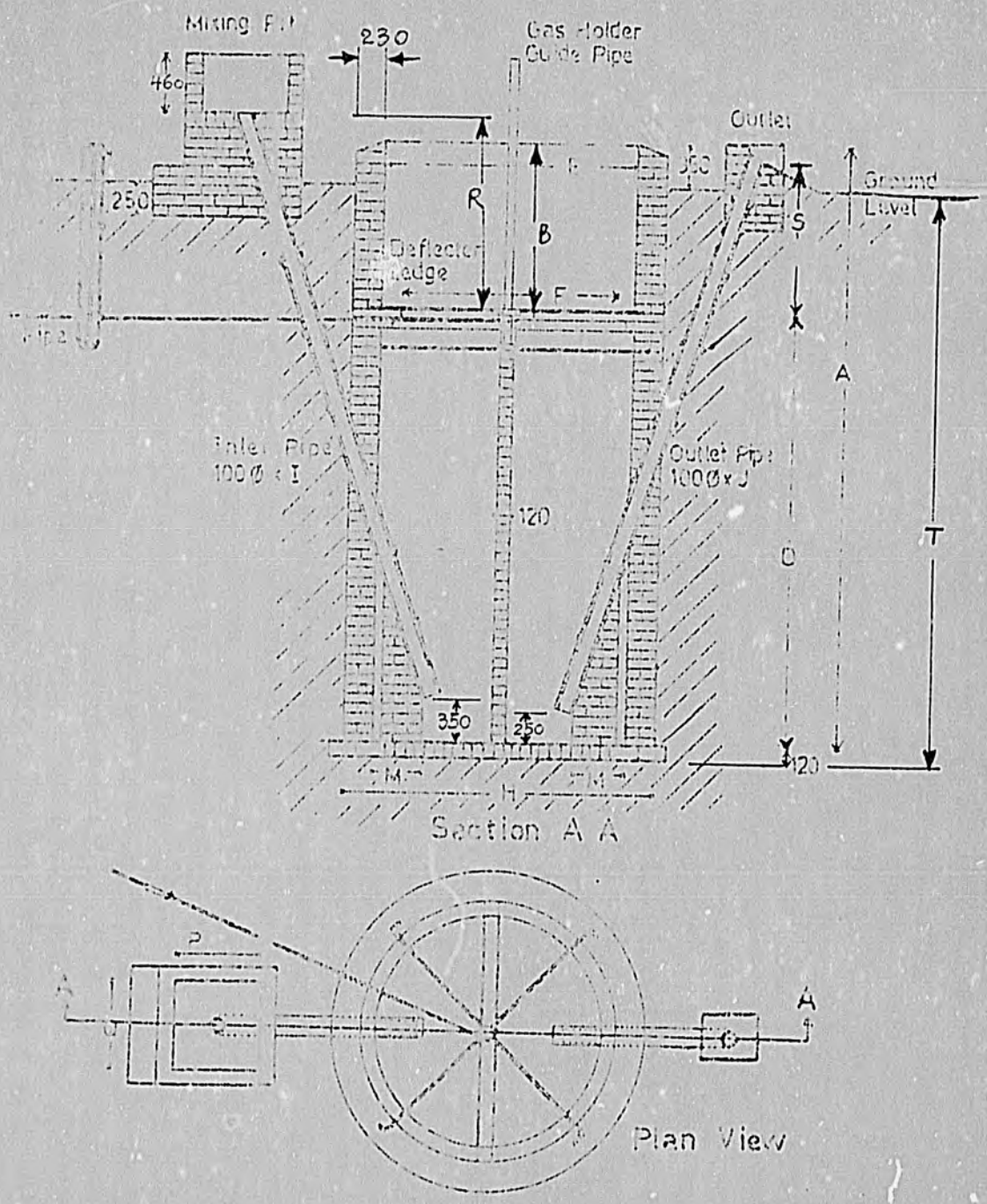

Figure 2.4 Floating Drum Design SD200, 350 & 500 (Straight)

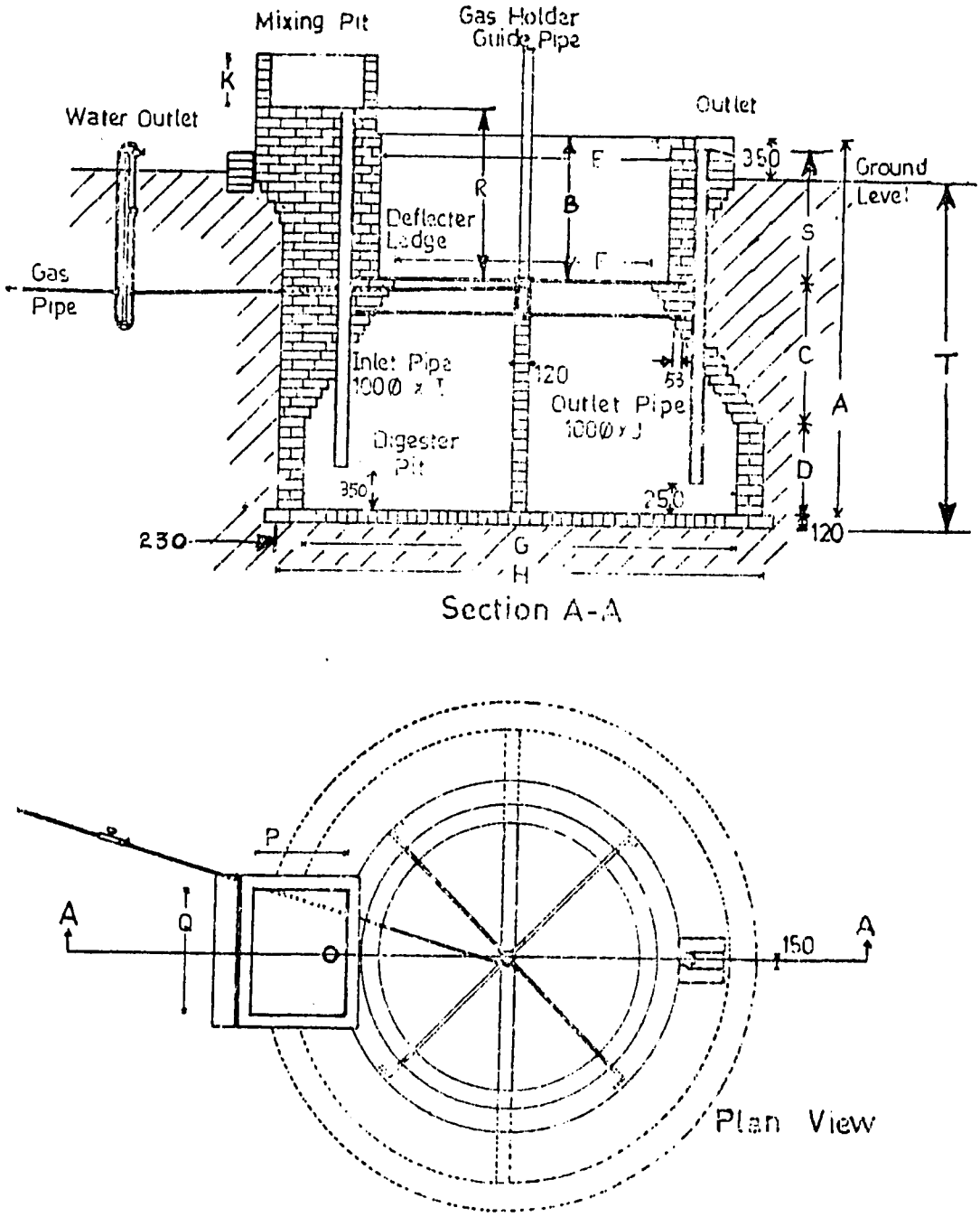

Figure 2.5 Floating Drum Design SD100, 200, 350 & 500 (Taper)

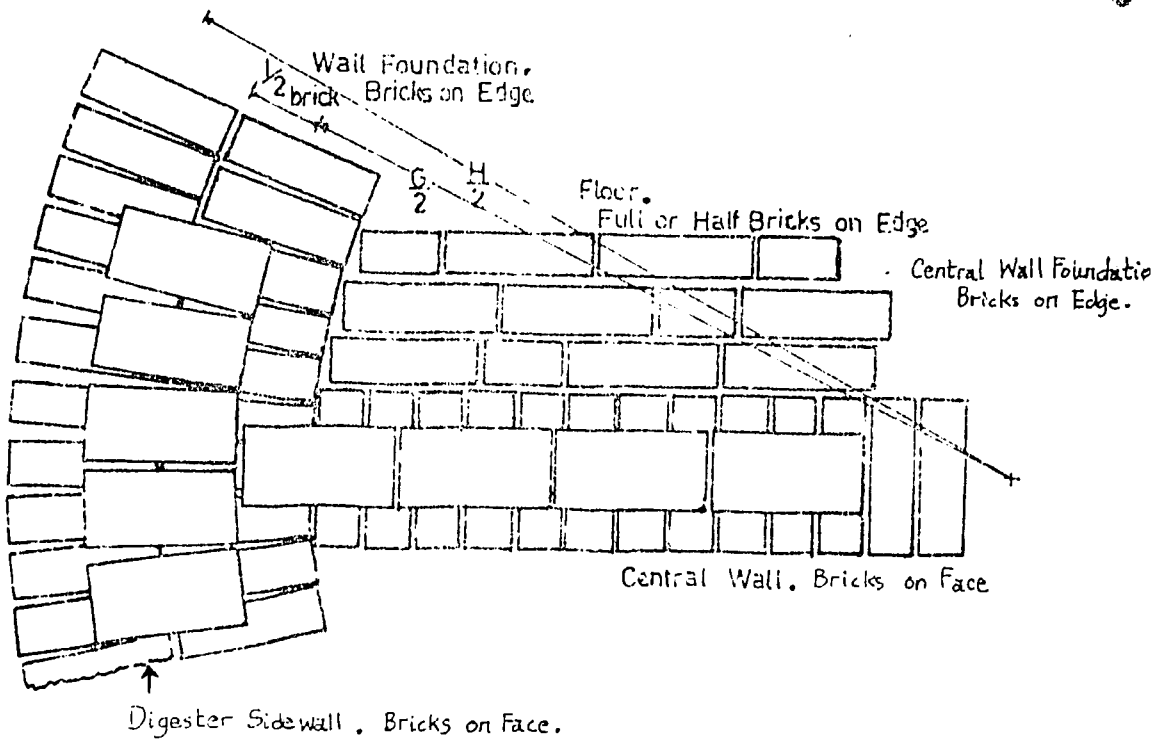

Figure 2.6 Layout of Bricks for the Floor of Drum Plants

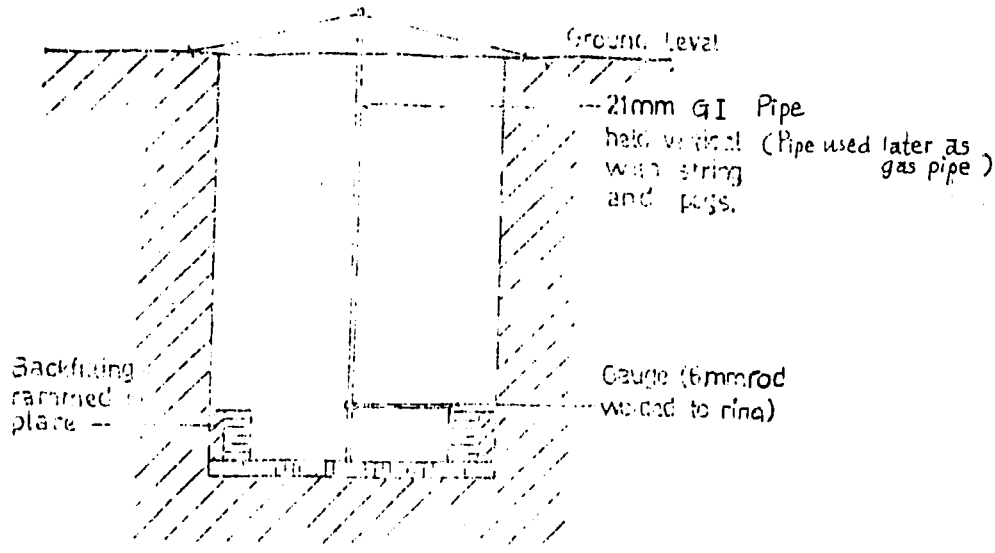

Figure 2.7 Building Gauge used to Ensure Circular Walls

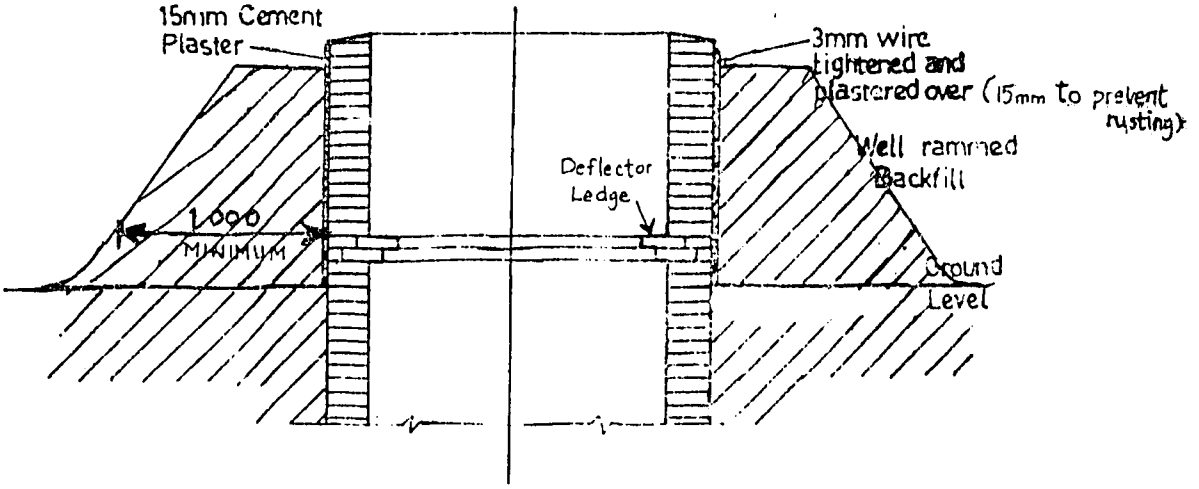

Figure 2.8 Method for Strengthening Brickwork above Ground Level
(United Nations ESCAP)

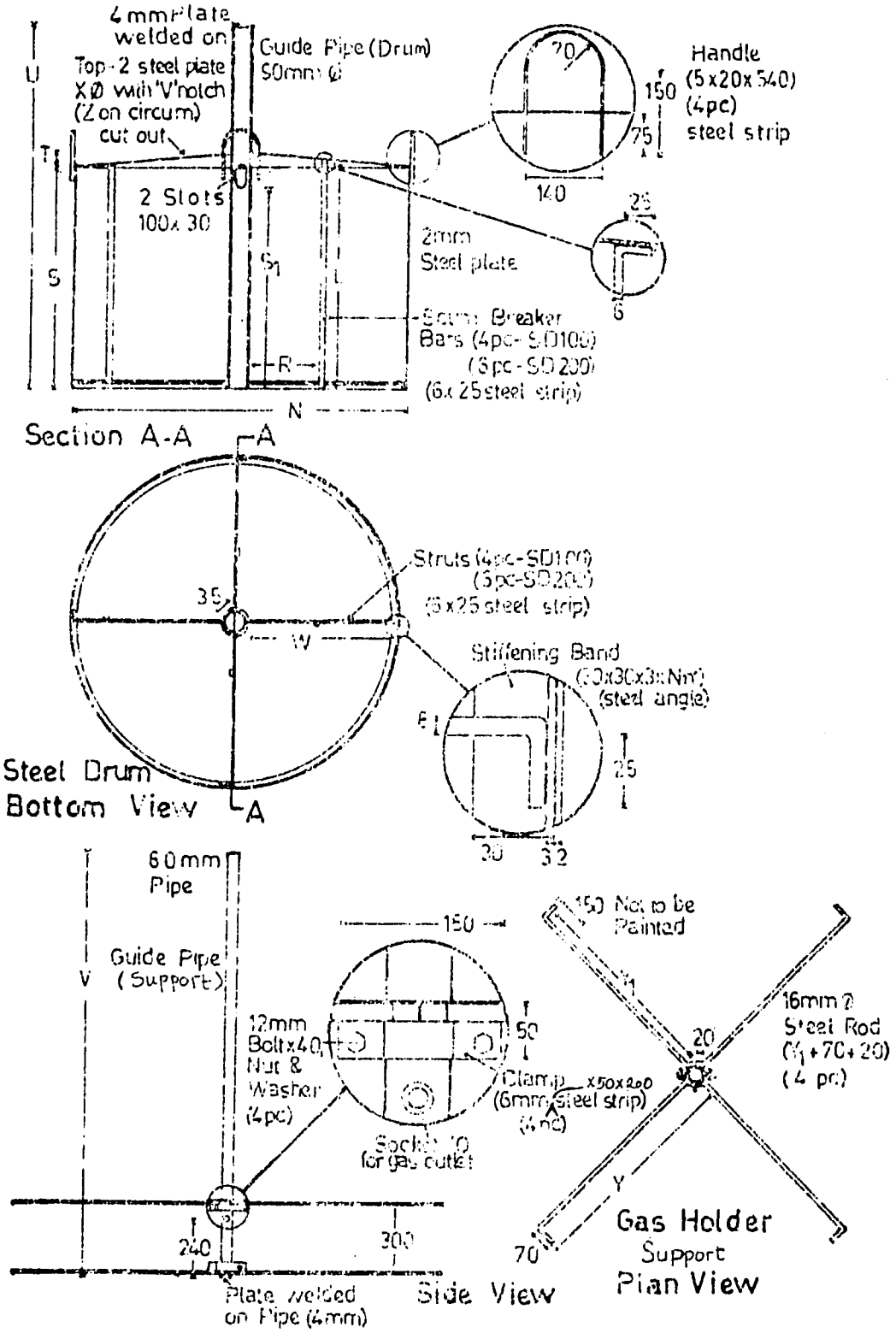

Figure 2.9 Gas Holder for SD100 & 200

44

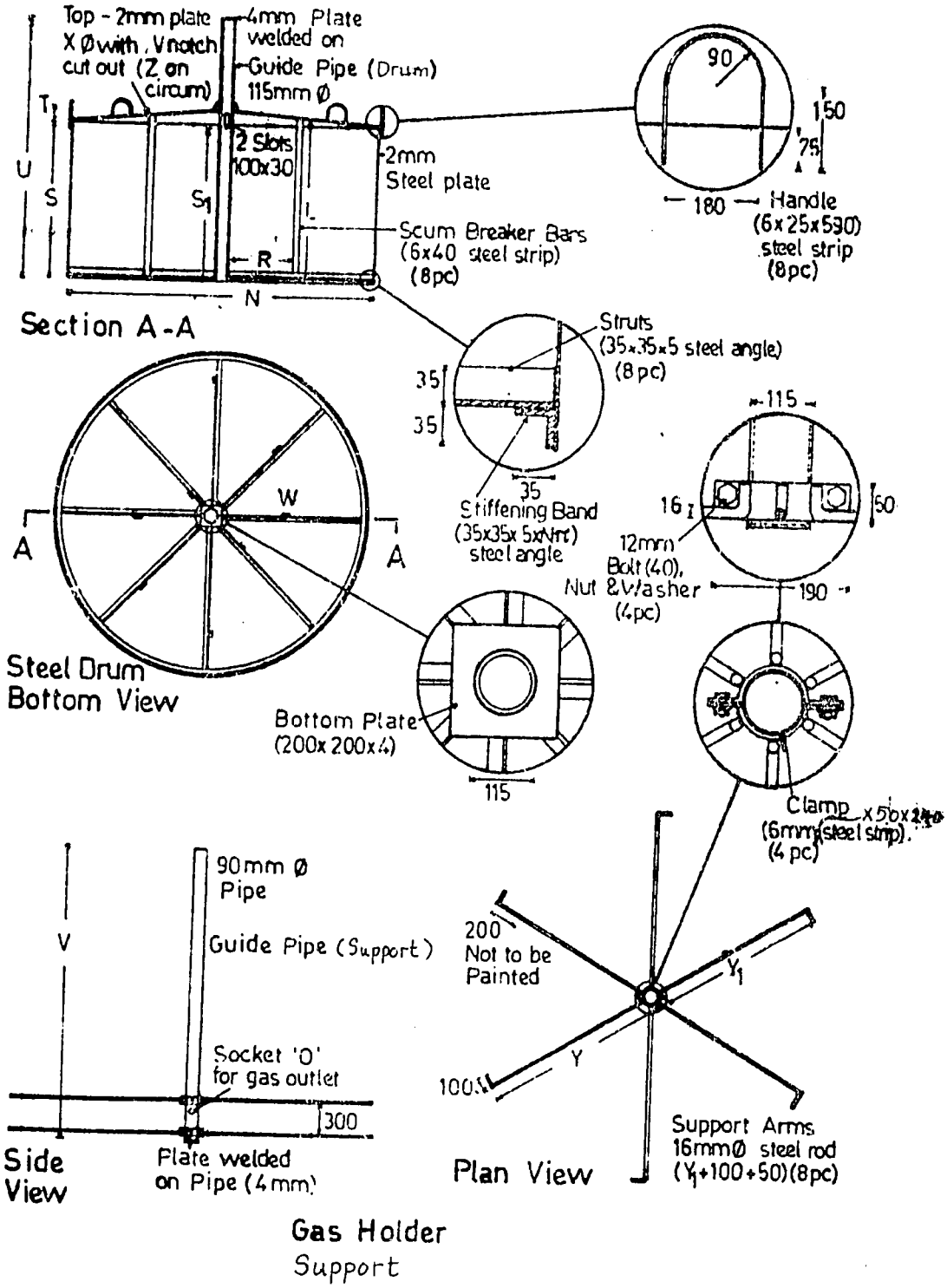

Figure 2.10 Gas Holder for SD350 & 500

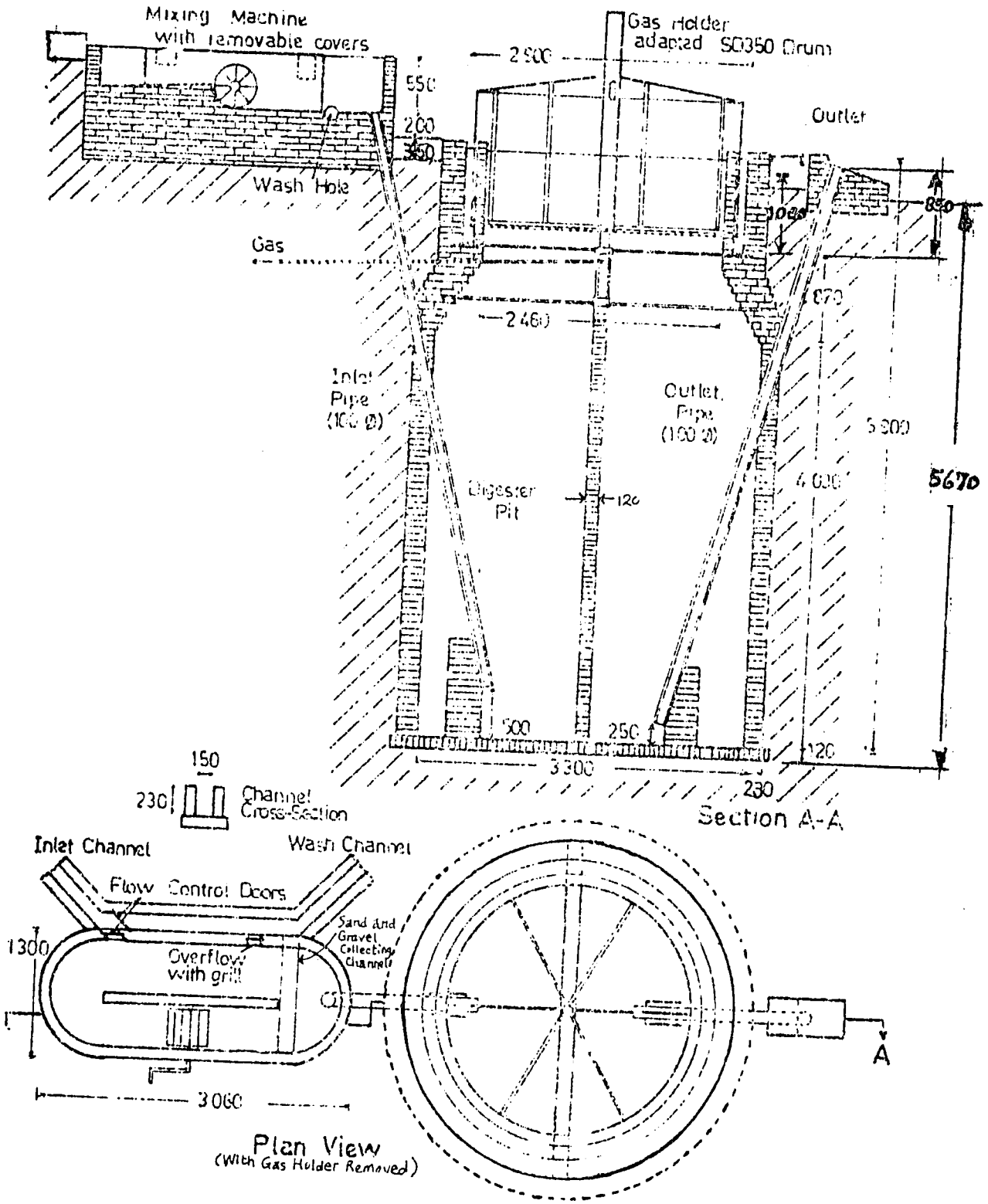

Figure 2.11 Night Soil Gas Plant

Chapter 3. FIXED CONCRETE DOME DESIGN

D. Fulford

Characteristics of Design

The dome design consists of an underground digester pit with a concrete dome-shaped cover over it, to collect the biogas as it is given off by the slurry. The enclosed chamber is lined with concrete plaster and is all underground. The design used by DCS is an adaption of a design developed originally in China (SPIIBD, 1978, van Buran, 1976) and it uses the 'displacement principle' of operation. A second pit, called the 'slurry reservoir' is built above and to the side of the digester pit and is open to atmospheric pressure. The concrete dome is fixed, so it cannot move up and down as gas collects; instead the slurry in the digester pit is forced up into the slurry reservoir, as the biogas collects under pressure (Figure 3.1). As the biogas is used from under the concrete dome, the slurry flows back from the reservoir to replace it.

The version of this design developed in DCS is made of concrete, with a minimum of reinforcement steel in it. Brick or stone masonry is only used for the inlet pit and slurry reservoir. As there is a high gas pressure under the dome, when it is full of gas (up to 1.2 metres water guage, 1200 kg/m^2), the whole dome must be covered with a minimum of 0.8 metres of soil to hold it down. A central turret of brick or stone

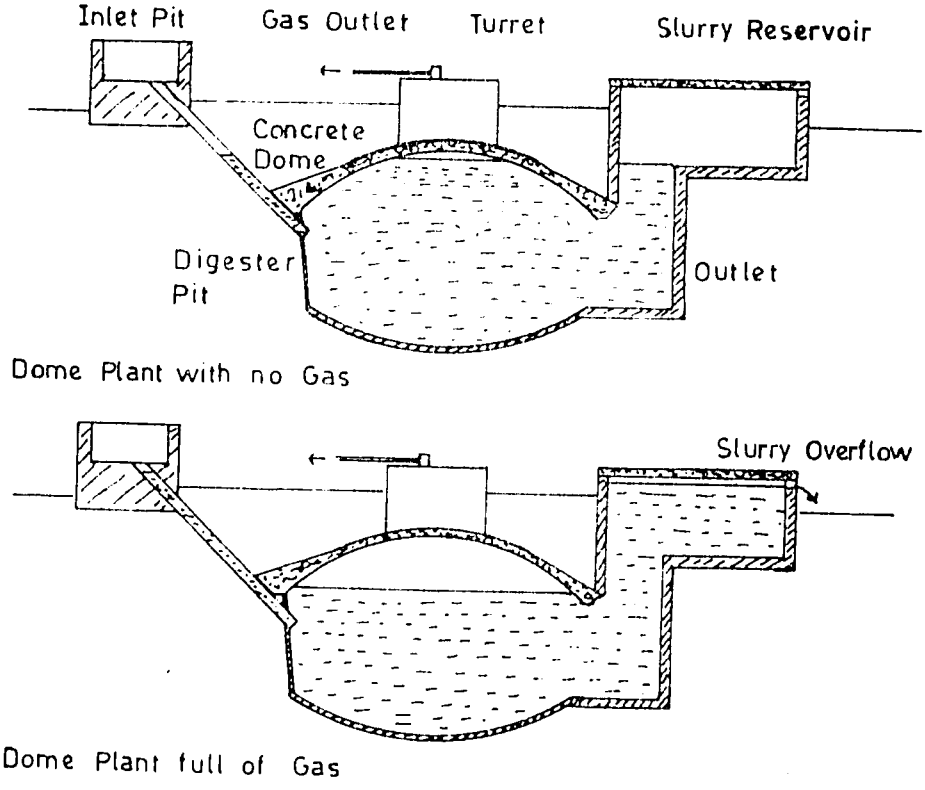

Figure 3.1 Displacement Pri ciple of operation of Dome Plant

Gas collects under the dome and forces the slurry into the reservoir. As gas is used, the slurry flows back into the digester pit.

filled with soil, also acts as a weight, as well as supporting a gas outlet pipe and a scum breaker. Access to the digester pit during construction, and also if the pit needs cleaning out at any time, is from the side, through the slurry reservoir and outlet. (For safety, nobody should enter the pit until every trace of cow dung has been washed out of the pit and the remaining biogas has been flushed out, as it is possible to be suffocated by biogas in the pit.)

The two key features of the DCS version of the Dome Design are the way the dome is built and the way it is sealed. The dome is made by casting it over a mud mould, before the digester pit is dug away underneath it. The dome is sealed with a cement plaster coat with an acrylic plastic emulsion paint mixed in it. This design has proved very successful in Nepal, both technically and commercially. The commercial price is about 20% cheaper than the steel drum design and the farmers seem to like it. Because both the digester pit and the gas dome are underground, it is better insulated than the steel drum design, so gas production in cold weather is greater. Further insulation, in the form of straw or compost can easily be added. The DCS design includes a scum breaker, fitted through a pipe in the centre of the dome. This item is not essential, and could be left out, but it may allow farmers to clean out their plants less often, if they allow too much straw and other vegetable matter, that can form a scum, to be added with the slurry.

A disadvantage of this design is the increased and variable pressure of the gas in the gas dome. As the gas forces the slurry into the reservoir, the gas pressure increases from a few millimetres up to 1200 mm (WG). This high pressure makes it more difficult to seal gas pipes against leaks and can also cause certain gas valves to leak. It also means that gas burners and gas lights must be carefully controlled as the gas flow through the jets is increased (by up to 4 times). The high pressure has one advantage, as the loss of pressure as the gas flows down gas lines is far less important. Smaller sized gas pipe may be used with this design of plant.

The construction of this design of digester is also more difficult than for other types, as it requires people with good skills in plastering cement. If the cement plaster work is done badly, then gas or slurry can leak from the plant, thus reducing its efficiency.

At present, 3 sizes of this design are being made commercially in Nepal: CP10, CP15, and CP20, where the numbers refer to the nominal total digester pit volume in cubic metres (Table 3.1)

Plant Type	Digester Vol m^3	Dome Vol m^3	Total Vol m^3	Working Vol m^3	Input Dung kg	Retention Time day	Gas Prod m^3
CP10	7.3	3.3	10.6	9.0	60	75	1.84
CP15	9.7	5.6	15.3	12.5	90	69	2.69
CP20	14.1	5.6	19.7	16.9	120	70	3.61

Table 3.1 Characteristics of Concrete Dome Design.

Notes: The 'Working Volume' is the mean volume of slurry in the digester pit (taken over the daily variations).
The Input is taken as cattle dung mixed 1:1 with water.
The Gas Production is taken at 25°C. (based on Chapter 5).

The CP10 size produces enough gas for the cooking and lighting needs of a family (7 people), and requires dung from 4 to 6 cattle. Two CP20 plants can supply enough gas to run a 5HP engine for 6 hours a day.

Construction Details for Fixed Concrete Dome Design

Detailed drawings for the Fixed Concrete Dome design are given in Figures 3.2 to 3.6 inclusive. The drawings apply to all three sizes of plant, but are only to scale for the CP10 size. The values for the dimensions indicated by letters and numbers in the drawings are given in Table 3.2 and the quantities of materials used are shown in Table 3.3.

Site Preparation

The site for the biogas plant is roughly cleared and levelled. The positions for the digester pit, inlet pit and reservoir are defined. The centre of the dome is located and a circle, diameter D_1, is marked on the ground, using string and sticks. Two pegs are placed in the ground, about 0.6 metres from the edge of the circle, so that the string tied between the pegs passes over the centre of the circle. This string defines a datum line from which measurements may be taken. It should be checked with a level to ensure it is horizontal.

A hole is dug, within the circle, diameter D_1, to a depth H_1. In the centre of this hole a second pilot hole is dug, of diameter 1.5 m or more, and of depth H_2 or more. This hole eases the work of excavation of the digester pit later on, and also allows the condition of the soil to be checked: to see if there are any large stones, or to see if the water table is too high.

Making the Dome

The concrete dome is cast over a mud mould. The pilot hole is covered with boards and branches and mud is piled over. The pipe for the scum breaker is placed in the exact centre of the mould. The edges of the hole are cut away, and mud is packed onto the central mound, until the steel template will fit into the hole. The template is attatched to the central pipe with string, and rotated round it to define the shape of the mould. The template should just pass under the datum string and should be regularly checked with a plumbline or level to ensure that it is square.

An important part is the edge of the mould, where the concrete dome rests on the soil. The edge of the dome is thickened to form a 'collar' and the weight of the dome, and the earth fill above it, is taken by this collar as it rests on the earth foundation. The soil in this area should be disturbed as little as possible, as the shape is cut, and it should be packed as hard as possible to form a firm foundation.

The dome shaped mould should be shaped carefully according to the template and packed hard to form a smooth segment of a sphere. When it is complete, it is covered with a thin layer of fine sand and the template removed. The gas outlet pipe should be put in place and held upright with a pole or rope across the top of the pit. The 0.1 m (6mm) studs on both the gas outlet and scum breaker pipes should lie just above the mould, so they are covered completely with concrete, when it is applied.

The concrete dome should be cast at one time and within one day, so all the materials must be prepared and ready. Enough labourers must be available to mix the concrete and trowel it in place. A mixture of 1 part cement, 3 parts sand and 3 parts aggregate (small stones, 5 to 25 mm diameter) is used, with as little water as possible to make a workable mix (Table 3.3). Reinforcement rods (1.4 metres long, 6 mm thick) are placed in the edge of the dome, over the outlet, next to where the slurry reservoir is to be built. The concrete is trowelled to the shape shown in Figure 3.2 and compacted. It is left to dry for 7 days before it is disturbed. It must be kept damp by covering it with sacking which is wetted regularly, so the concrete cures properly.

Item	Dimension (millimetres)	Ident.	CP10	CP15	CP20
Concrete Dome	Outside Depth	H_1	800	920	920
	Inside Diameter	D_1	3 100	4 000	4 000
	Radius of Spherical Seg.	R_1	2 000	2 800	2 800
	Included Angle (°)		101°36'	91°10'	91°10'
	Thickness of Shell	t_1	60	80	80
	Width of Collar	t_2	190	230	230
	Height of Collar	t_3	160	190	190
	Length of Collar	l_1	800	1 000	1 000
Turret	Height of Turret	T_1	750	750	850
	Diameter of Turret	T_2	750	1 000	1 000
	Length of Gas Outlet	T_3	900	900	1 000
Slurry Inlet	Inside Length Sides	I	1 200	1 500	1 700
	Length Cement Pipe	L_1	2 500	3 000	3 000
Digester Pit	Depth of Conical Sectn	H_2	780	270	785
	Depth Spherical Segment	H_3	580	1 090	875
	Radius Spherical Seg.	R_2	2 100	2 200	2 500
	Diameter of Inside	D_2	2 900	3 800	3 800
Slurry Outlet & Reservoir	Overflow to Datum	G_1	240	160	120
	Datum to Floor	G_2	560	680	630
	Floor to Base Outlet	G_3	1 060	630	1 195
	Inside Length Reservoir	S_1	1 800	2 480	2 640
	Inside Breadth Reserv.	S_2	1 250	1 250	1 760
	Length & Breadth Outlet		600	600	600
Template	Diameter of Guide Pipe	d_1	42	42	48
Scum Breaker	Length Outside Pipe	J_1	1 870	1 990	2 080
	Length Inside Pipe	J_4	1 950	2 070	2 160
	Base to Rider	J_2	630	740	740
	Length Bottom Blade	J_3	1 400	1 490	1 800
	Length End Piece	J_5	0	0	100
	Radius of Top Blade	R_3	1 980	1 980	2 480
	Diameter Inside Pipe(OD)	c_1	27	27	33
	Diameter Outside Pipe	c_2	33	33	42
	Diameter Rider	c_3	48	48	48
	Diameter Steel Stud	c_4	20	20	25

Table 3.2 Dimensions of Different Dome Plants

Inlet Pit, Turret and Gas Outlet

While the dome is curing, other work can be started. The inlet pit is built; a hole is dug beside the dome into which a length of asbestos/cement pipe is placed, which takes the slurry into the digester pit. The inlet pit itself is built of brick or stone masonry on a simple foundation. It is a square of sides: I , with the end of the inlet pipe to one end of the square. The inside of the square is filled up with stones or rubble to floor level, which is at least 0.5 metres above datum. The floor is paved with bricks or concrete and plastered, so that slurry can be mixed in the pit and pushed down the pipe into the digester. A removable stopper for the pipe is made of wood, or concrete cast into a suitable shape.

A brick or stone turret is built on top of the dome, to support the gas outlet and scum breaker pipes. When the plant is completed, this turret is filled with stone, rubble and earth and closed with a layer of concrete (50 mm thick).

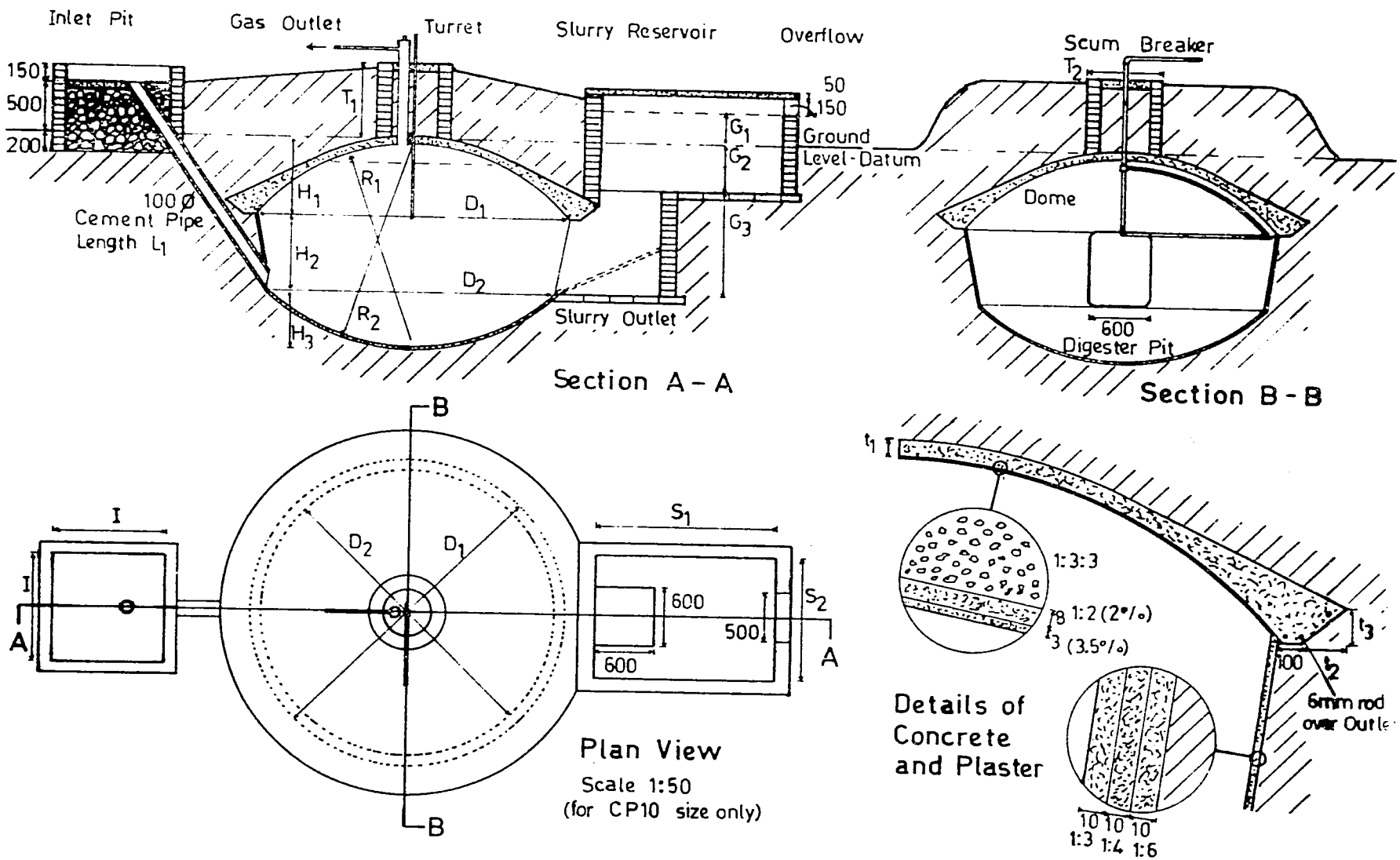

Figure 3.2 Fixed Concrete Dome Design: Construction Drawings

DJF/DCS

CP10 Size	Cement kg (bags)	Sand lit (bags)	Aggregate lit (bags)	Bricks nos.
Concrete in Dome (1:3:3)	260 (5½)	500 (15)	500 (15)	-
Plastering	260 (5½)	600 (18)	-	-
Brick Masonry	120 (2½)	460 (14)	-	1300
Concrete Covers	50 (1)	70 (2)	140 (4)	-
Total for basic plant	690 (14½)	1630 (49)	640 (19)	1300
Extra to Plaster Outlet	50 (1)	160 (5)		
Extra for Support Legs	20 (½)	60 (2)		150
Cement Pipe	2.5 metres			
Steel Rod (6mm)	40 metres			
Acrylic Emulsion Paint	2 litres			
Scum Breaker				
Gas Outlet Piping				
CP15 Size				
Concrete in Dome (1:3:3)	500 (11)	1100 (32)	1100 (32)	-
Plastering	360 (8)	750 (22)	-	-
Brick Masonry	140 (3)	540 (16)	-	1500
Concrete Covers	70 (1½)	100 (3)	200 (6)	-
Total for basic plant	1070 (23½)	2500 (73)	1300 (38)	1500
Extra to Plaster Bricks	50 (1)	170 (5)		
Extra for Support Legs	20 (½)	60 (2)		150
Cement Pipe	3.0 metres			
Steel Rod (6mm)	50 metres			
Acrylic Emulsion Paint	3 litres			
Scum Breaker				
Gas Outlet Piping				
CP20 Size				
Concrete in Dome (1:3:3)	500 (11)	1100 (32)	1100 (32)	-
Plastering	420 (9)	900 (26)	-	-
Brick Masonry	170 (4)	680 (20)	-	1900
Concrete Covers	90 (2)	140 (4)	280 (8)	-
Total for basic plant	1180 (26)	2820 (82)	1380 (40)	1900
Extra to Plaster Bricks	70 (1½)	250 (8)		
Extra for Support Legs	40 (1)	200 (6)		300
Cement Pipe	3.0 metres			
Steel Rod (6mm)	75 metres			
Acrylic Emulsion Paint	3 litres			
Scum Breaker				
Gas Outlet Piping				

Table 3.3 Material Quantities for Different Dome Plants

Notes: If wooden covers are used rather than concrete over the slurry reservoir, then only 5 metres of 6mm steel rod are required.
Plastering of the bricks in the slurry outlet and reservoir is only required if the outside soil is porous.
If stone masonry is used, double the cement and sand quantities in line: 3 of each section.

The pipe fitting can also be started, to take the gas from the plant to where it is needed. The pipeline should slope (1:100) towards a low point, where a water outlet device is fitted. A small brick-lined pit can be made to allow easy access to it (Figure 3.6).

52

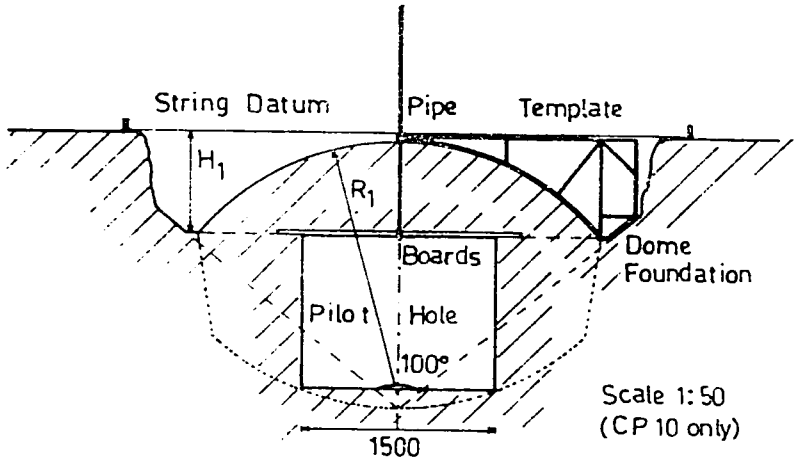

Figure 3.3 Mud Mould for Dome

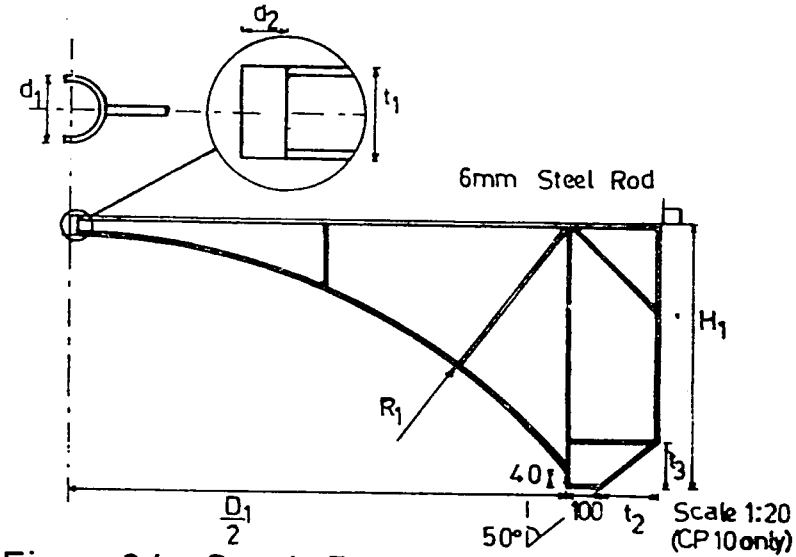

Figure 3.4 Steel Template

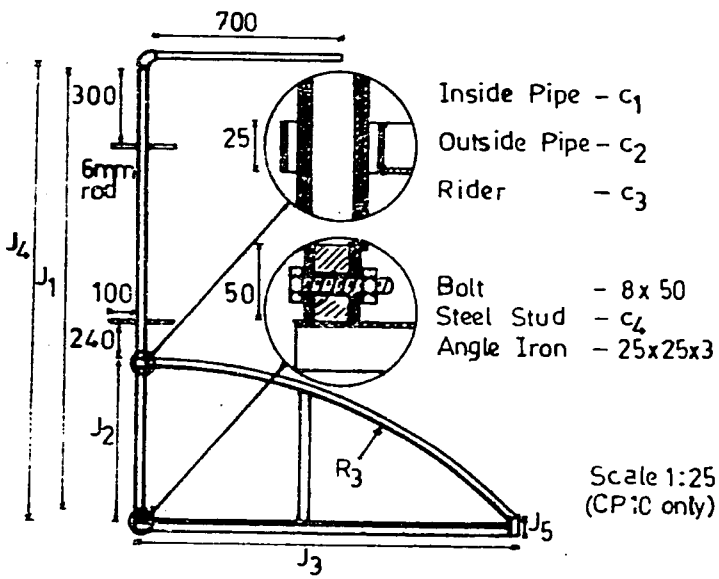

Figure 3.5 Scum Breaker

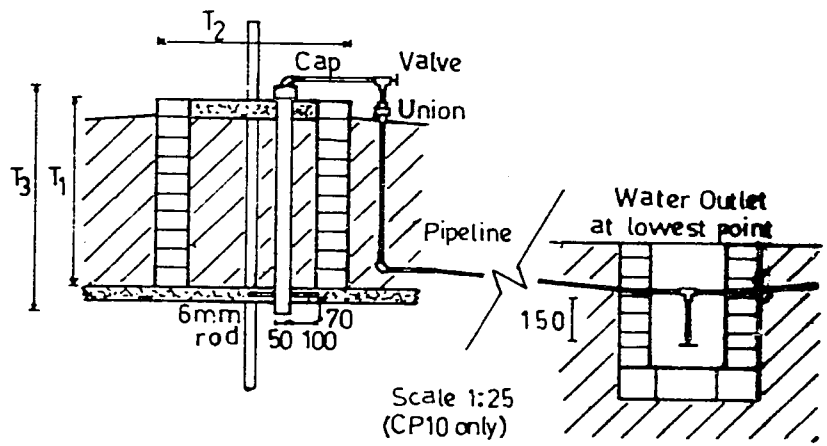

Figure 3.6 Gas Outlet and Pipeline

DJF/DCS

Digging and Plastering the Digester Pit

A pit for the slurry outlet is dug beside the dome, to a depth: $G_2 + G_3$ below the datum. Once the dome concrete is set, excavation of the digester pit can begin, soil being removed via the slurry outlet pit. If the soil is firm, the whole pit can be dug at one time. Great care must be taken not to undercut the edge of the dome while digging. A pipe can be lowered through the scum breaker pipe to act as a centre from which the radius $(D_1/2)$ can be measured, with a string or tape, at a depth: H_2 below the end of the fixed gas outlet pipe. The concave shape of the floor can be defined by a length of string, tied to the top of the scum breaker pipe, as it goes into the dome. The string is of length: R_2, and the earth is cut away until this string can be held taut over the whole floor area.

If the soil is loose and sandy, brick pillars can be made to help support the dome (5 for CP10 and 7 for CP15 and CP20 plants): one on either side of the outlet, the others spaced equally around the dome. Recesses are first dug, one at a time from the pilot hole to under the edge of the dome, and a brick pillar (height: H_2) built up from the floor to the dome. When these 'legs' are complete, the rest of the digester can be excavated as usual.

The whole of the inside of the digester is lined with cement plaster, walls and floor. The plaster is usually applied in 3 coats, each of 10mm thick (CAI), using mixtures of 1:6, 1:4, 1:3 of cement and sand, for respective coats. As little water as possible should be used to give a workable mix. The plaster for each coat should be applied at one time, working from the inlet to the outlet round both walls and floor. If the first coat does not bind well to the wall, eg. if the soil is loose and sandy, it can be 'dashed' onto the wall, sharply throwing it from the trowel. Alternatively, wire mesh can be used to reinforce and bind it. Each coat should be allowed to cure for two days before the next is applied, and should not be allowed to dry out while it is curing. Other work, such as pipe fitting, can continue as the plaster cures.

Plastering the Dome

The inside of the dome is carefully cleaned of all mud and loose sand and scrubbed with a wire brush. It is also dampened by brushing on water. The surface of the dome is then sealed with two coats of cement plaster mixed with acrylic plastic emulsion paint. The first coat is a mix of 1 part cement with two parts sand with about 2% (by weight of cement) paint. The water content should be limited to about 35% of the weight of the cement, and the morter should be very well mixed. This coat is of 8 mm thickness and it should be allowed to cure for two days before the top coat is added. This coat is of pure cement mixed with 3.5% paint and 28% water. Both coats should be spread evenly over the whole inner surface of the dome to ensure a gas-tight seal. Any remaining paint can be applied over the surface of this plaster, once it is cured.

Slurry Reservoir and Outlet

The slurry reservoir and outlet can be shaped and lined with brick or stone masonry while the plaster coats are drying. The outlet is 0.6 metres square and the walls should blend in with the edges of the dome and the plastered walls of the digester pit. To save material on the CP20 plant, the outlet floor can be made on a slope (dotted lines in Figure 3.2), but steps should be made to ease access. The reservoir encloses a rectangle of sides: S_1 and S_2 and the masonry floor is: G_2 below the datum level. The walls are built up to a height of: $(G_1 + 0.15\ m)$ above the datum, except for the slurry overflow. A

large overflow gap is useful (eg. 0.15 x 0.5 m) as the slurry can dry out and block it.

If the outside soil is porous, the slurry outlet and reservoir may need to be lined with cement plaster (10mm of 1:6 mix) to stop the slurry leaking out through the bricks. This type of leak should be self-sealing eventually, as the slurry dries out in the cracks and fills them.

Completing the Plant

The scum breaker is put in place, with the inside pipe, with handle attatched, lowered from above and bolted to the scum breaker arm inside the plant (Figure 3.5). The whole dome must be covered with soil, up to the level of the top of the turret in the centre. The weight of soil counterbalances the pressure of the gas inside the dome. If inadequate soil is used to cover the dome, it may break.

Covers must be made for the slurry reservoir, either from wood or reinforced concrete. If concrete is used, lengths of 6mm steel rod are arranged in a grid shape, equally spaced, in a shallow mould. This can be a trench in the ground (50 mm deep). The concrete mix is 1:2:4, cement to sand to aggregate (stones 5 to 25 mm). The covers can be made as several separate slabs to ease moving, and handles, made from 6mm rod incorporated.

Fabrication of Plant Components

One advantage of the concrete dome digester is that very little of the plant has to be fabricated in a workshop and transported to the site. There are three items: the steel template, which is reusable for many plants, the gas outlet pipe and the scum breaker.

The steel template is made from 6 mm rod (Figure 3.4). One rod is bent into a radius (R_1), but the rest must be straight. The top corner must be accurately square. As the frame is welded, care should be taken that it remains flat, and not twisted. A short section of pipe is chosen, to fit round the central pipe of the scum breaker.

The gas outlet pipe is made from 50 mm (2 inch) diameter steel galvanised pipe (GI). Four 100 mm stubs (of 6 mm) steel rod, or other steel material) are welded, at right angles to each other, onto the pipe, near the lower end. These stubs will tie the gas outlet into the concrete dome. A screwed cap is provided at the other end, to provide access for cleaning. The 15 mm (½ inch) GI gas pipe can be welded to the 50 mm pipe, or to the cap. The former has proved more effective, as cast iron pipe fittings are difficult to weld. However, if brazing were used, the second method would be prefered.

The scum breaker is made from angle iron (25 x 25 x 3 mm) and GI pipes. The upper arm is bent to a radius (R_3) and welded to the lower arm (length J_3). A strut of angle or flat iron is welded between them. Only the lower arm is attatched to the inner driving pipe (c_1), with a bolt, passing through the pipe and a stud on the arm. The upper arm is welded to a "rider", a short length of GI pipe (c_3) that rides on the outside of the fixed pipe (c_2). The outside pipe has 8 studs welded to it, so it can tie into the cement dome and the concrete at the top of the turret. A handle is made from GI pipe (c_1), attatched to the inner pipe by an "elbow", and welded or brazed for strength.

Practical Experience of the Use of Dome Plants

Two follow-up surveys have been done on the first 11 plants built to this design in Nepal. A further 12 plants were included in the second survey, built since the first. The second survey included 16 CP10, 2 CP15 and 5 CP20 plants (3 of the latter on a government farm) (Devkota).

All 23 plants were working, at the time of the second survey, when the first plant built was almost 3 years old, and the structure appeared to be in good condition. The major problem experienced by the plant owners were the leaks in the gas valves, which were not designed to use the greater pressures. No owner had any other problems with using their gas equipment at these greater pressures.

The scum breaker caused some complaints. People objected to gas and froth leaking from the pipe when the dome was full of gas. This was a deliberate feature of the original design, to act as a "safety valve" when there was too much gas, but the pipe has been made longer to stop this happening. Gas can leak from the outlet pit, so a "safety valve" is not needed. About half of the original (11) scum breakers were broken, but the owners could see little difference whether they were able to use them or not. The scum breakers were included because of reports (Fry, 1974) of scum build up, and of practical experience of similar problems with drum plants. However, they are not used in China despite the practice of adding large proportions of vegetable matter to the plants (FAO 41). Scum breakers may not really be necessary.

Some owners complained that the slurry did not come out of the overflow each day, despite adding slurry daily. The soil is very porous in the area where these plants were built, and the bricks were of lower quality so slurry could be leaking away underground, pushed by the high pressure in the plants. The inside of the slurry outlet and reservoirs of these plants need to be plastered.

To date (Summer 1983), about 300 biogas plants have been built to this design in Nepal, and most seem to be working well. There have been a few problems with individual plants, but the cause is usually traced to poor masonry work. The dome has rarely given trouble, although one or two have cracked, when poor quality cement (that had lain in the open for several months) was used. These were rebuilt. In one plant, the farmer added slurry before the dome was covered with soil, and the gas pressure pushed the dome out of the ground. Once the slurry had been removed, the dome could be pushed back into place, the cracks between the dome and the reservoir pit plastered over, and the plant was working as well as any other.

Other problems have been wrongly shaped domes, too small because the template had not been positioned properly, and too small digester pits because the masons had measured them incorrectly. The present design has been slightly modified to allow these measurements to be made more easily. Good supervision and quality control are essential for the building of any design of biogas plant.

Chapter 4. TUNNEL DESIGN

Basic Design.

The tunnel design of biogas plant was inspired by the work on plug flow trench reactors done at Cornell University (Jewell et al, 1980). It is different in that it is totally underground and includes gas storage using the displacement principle which means there is movement and mixing of the slurry in and out of the reservoir and therefore the plant is not strictly speaking a plug flow reactor.

From figure 4.1 it will be seen that this underground masonary plant is shaped like a tunnel and hence its name. The slurry is fed in at one end and discharged at the opposite end. Gas is stored in the roof of the plant which is lined with plastic sheet and displaced slurry flows into a slurry reservoir at the overflow end of the plant.

The top of the tunnel is covered with soil to a minimum depth of 900 to provide the necessary weight to prevent the gas pressure breaking the tunnel roof when it is full of gas. The tunnel design has certain advantages over the Dome design. It is simpler to build and special skills for cement plastering are not required. It requires a shallower digester pit, so is useful where the water table is high, or where the ground is difficult to dig. It is of a modular type of construction, using pre-cast concrete sections, and so can be made to any size, by adding extra sections. Because of the ease of construction it is cheaper to produce.

Jewell's work suggested that a thicker slurry could be used in a plug flow reactor (Jewell et al, 1980b). Therefore less water would be required to mix with the cattle dung and the total digester volume could be reduced for the same amount of daily feed. Tests with the tunnel plant showed that slurries up to 14.5% total solids maximum (a ratio of 2 cattle dung to 1 water approx.) gave the same gas production as slurries of 9% total solids (1:1 dung : water ratio approx.). Subsequent research showed that the same appears to be true for the Dome and Drum plants too (see chapter 15). The tunnel design of plant has been in use in Nepal since 1980 and is proving to be reliable.

Plant Sizes

NOTE. As it is well established that these plants run successfully with thicker slurries, all the figures regarding gas production are based on a cattle dung to water ratio of 2:1. This is different to both Drum and Displacement designs where a ratio of 1:1 has been used. It means a smaller digester volume is needed for the same gas production.

Due to the modular construction any size of plant can be built, by altering the length or by running two or more digesters in parallel. The depth of the plant could also be increased in order to increase the plant volume, provided the side walls are made strong enough. So far three sizes of tunnel plant have been made and a series of five standard sizes is planned. There are two designs of digester trench. A tapered trench (Figure 4.2), with the side walls made from cement mortar plastered onto soil (as in the dome plant), is suitable in places where the soil is of good quality. It is the most commonly used design. A brick lined rectangular trench (Figure 4.1) is more appropriate where the soil is sandy or loose. The cross-sectional area of the tunnel, with its arched roof, is about 1.10 sq.m. (Trench 0.772 sq.m. Roof 0.330 sq.m.). The masonry lined trench has an area of 1.25 sq.m., but dead spots in the corners may reduce this. Each 1 meter length of tunnel plant, therefore, is assumed to have an effective volume of 1.10 cu.m.

The amount of gas that can be stored depends on the smaller volume of one of two things: either the volume of slurry stored in the reservoir which replaces the gas as it is used, or the volume under the plastic lined curved tunnel roof. In table 4.1 the volume of slurry in the reservoir is used because this is the smaller of the two volumes. It allows about 65% of the daily gas production at 25°C to be stored. If a higher percentage needs to be stored then the reservoir can be extended. For each half meter addition length to the reservoir an extra 0.36m^3 gas can be stored. The maximum storage under the tunnel roof is 0.330m^3 per metre length.

D.C.L. has made three sizes of plant. For simplicity, and because the basic design is not being altered at all, the sizes of those plants accepted and those planned to become standard are listed in table 4.1.

Plant	TP6	TP8	TP10	TP15	TP20
Digester vol.m^3	4.2	5.8	6.9	10.4	13.9
Dome vol.m^3	1.8	2.5	3.0	4.5	5.9
Total vol.m^3	6.0	8.3	9.9	14.9	19.8
Gas storage* vol.m^3	1.1	1.4	1.8	2.8	3.6
Working vol.**m^3	5.5	7.6	9.0	13.5	18.0
Input dung kg/day	60	80	100	150	200
Retention time days	61	63	60	60	60
Gas production per day m^3					
Slurry temp. 30.1°C	3.0	4.1	4.9	7.3	9.7
Slurry temp. 25°C	1.7	2.4	2.8	4.3	5.7
Slurry temp. 20.5°C	1.3	1.8	2.2	3.3	4.3

* This is controlled by the volume of displaced slurry which can be stored in the slurry reservoir.

** The "working volume" is the mean volume of slurry in the digester pit (taken over zero and maximum gas stored).

Table 4.1 Characteristics of Tunnel Plant designs
Input : cattle dung mixed 2:1 with water

Dimension (millimetres)	Ident.	TP6	TP8	TP10	TP15	TP20
Tunnel Length	A	5 500	7 500	9 000	13 500	18 000
Trench Length	C	6 500	8 500	10 000	14 500	19 000
Reservoir Length	D	1 500	2 000	2 500	4 000	5 000
Inlet Pit Length	I	1 100	1 400	1 800	2 650*	3 550*

* Or use a mixing machine (Dimensions in Chapter 6)

Table 4.2 Dimensions of Standard Tunnel Plants

Type of Plant	TP 6	TP 8	TP 10	TP 15	TP 20
Cement* kg	300	400	450	600	800
Sand " m^3	1.15	1.45	1.82	2.43	3.12
Bricks 230 x 120 x 75 (9" x 4½" x 3")	1,200	1,500	1,700	2,300	2,900
Roof sections (including reservoir)	24	34	42	66	88
Plastic sheet m^2	9.75	12.75	15	21.75	28.5
Inlet pipe (100 ø) m	2	2	2	2	2
Gas outlet pipe	1	1	1	1	1
Reservoir cover	2	2	2	2	2
Partition piece	1	1	1	1	1

* Excluding requirement for pre-cast parts.

Materials for components per piece	Cement kg (litre)	Sand litre	Aggreg. litre	Rod 6 ø m
Roof Section	5 (3.5)	7	14	-
Reservoir cover	10 (7.0)	15	30	9.3
Partition piece	10 (7.0)	13	27	5.1

Table 4.3 Material Quantities for standard tunnel plants using cement plastered trench.

Construction

Masonary. General information is given in chapter 5.

Detailed drawings for the two types of tunnel plant are given in Figures 4.1 and 4.2. Figure 4.1 can be made to apply to all sizes of plant by altering the lengths of A, C, D and I as given in table 4.2. Material quantities are given in table 4.3.

Site Preparation and trench.

The site is roughly levelled and cleared.

Using brick walls for side of trench

A trench is dug width 1700 depth 600 and length C . A second trench is dug in the centre of the first 1370 wide and depth 900 . The sides of this trench are straight. The floor is lined with bricks on their face and the side walls built up 800 as in figure 4.1 section D.D. Care needs to be taken when backfilling not to push the walls inwards. The top of the walls should be reasonably level along the whole length of the plant. End walls are built at the same time. At the inlet end the 100 ø inlet pipe is set totally into the wall and its mouth opens 400 up from the floor to give space for stones etc., which might fall down the pipe (Figure 4.3). Four wooden blocks are set into the end wall for attaching the plasti to. The end wall arch above the blocks is plastered smooth to protect the plastic from getting punctured.

Using cement plaster for sides of trench

A template (Figure 4.2) defines the shape of the trench. The ends of the template are placed on two bricks placed on either side.

End walls are built of masonary (Figure 4.3) and bricks are laid along the sides as shown on Figure 4.2. These should be reasonably level along the whole length of the plant. The floor and sides should be plastered all at one time.

Tunnel roof

The roof is built from precast concrete parts made in a mould (Figure 4.4). No reinforcing is used. As the plastic sheet is laid against the inside of the curve it means that this surface must be smooth. Each piece needs to be quality checked and repaired if necessary.

It is easy to place the roof pieces in position if there is one person on either side of the pit and one standing in the pit. A steel rod or wood pole helps lever the pieces into position. They are held there temporarily by pressing bricks between them and the sides of the hole and later on a permanent row of bricks is cemented in place.

If the plastic sheet is to be held in position by using tying strings then it is necessary to place five small spacers where the strings will go (e.g.twigs) (figure 4.8) between each pair of roof pieces and at both ends.

A 95 Ø hole is cut in the roof to suit the gas outlet pipe. It is positioned on the centre line and close to where the wall for the inlet pipe will be built and to which the pipe will be attached.

(A new alternative system of removing the gas without cutting a hole is shown in figure 4.10, it is cheaper and much simpler to install. Tests so far on this new system are positive).

The partition piece (figure 4.5) is put in place, smooth face inwards and the wooden blocks at the bottom. On the inside of the plant all the bevels between the roof pieces are filled in and made smooth and the joints on the outside closed with cement.

Slurry reservoir

This is built the same width as the plant (1130). The length is made to suit the size of the plant and the amount of gas which is to be stored.

In the reservoir it is essential to have a fillet to give enough weight to the tunnel roof pieces to prevent them opening up when gas pressure is formed in the plant. This fillet must be keyed into the side walls using a row of bricks (figure 4.1 section CC). The outlet level is 1100 above the bottom edge of the curved roof pieces. The opening is bell mouthed 45° to reduce blockages due to drying dung.

To reduce costs, curved roof pieces are used as a cover instead of flat ones except for 1000 which is necessary for access (figure 4.6). Brick walls are built up 900 from the bottom of the tunnel roof pieces and the curved pieces placed on top. If any roof pieces get damaged in transit then they can be repaired and used for this cover. The flat roof pieces at the extreme end have a hole covered by a wooden cover. This is to facilitate removal of a bucket of slurry each day for

feeding the new slurry with appropriate bacteria.

Slurry inlet

Note. The design of inlet pit shown is shallow with a large surface area so that slurry can be passively heated by solar energy in winter weather (refer volume 2 chapter 6). Where this is not required the depth of the pit can be altered from 150 to 550 and the length shortened by about 70%.

The inlet is built the same width as the plant (1150). The extreme end wall is overhung in order that the inlet pipe can run straight into the digester. The length is altered to suit the size of the plant and the daily input slurry volume. The depth is to allow 75 for the slurry and 75 to avoid spills when mixing.

Plastic sheet lining for tunnel.

Gas is stored in the roof of the tunnel using a plastic sheet 1500 wide x the length of the tunnel plus an extra 1000 for the ends. PVC 0.45mm thick has worked well and is reasonably easily obtainable because this thickness is used to cover seats. PVC or PVC based plastic is preferred because it is easy to repair or join using PVC glue. A high frequency PVC plastic welding machine is preferable for joins. Other people in Nepal are making tunnel plants using two thinner sheets (700 gauge) of polyethelene. It can be joined by hot plate welding. However, it cannot be glued, so puncture repair is almost impossible. It is readily available and low cost. If black plastic sheeting is used then it easily can be checked for punctures prior to installation by holding it up to the light. Care must be taken not to pierce or puncture the plastic when fitting it in place and the sheet should be laid on a mat, sacks or straw. It should not be walked on. Two methods of putting the plastic in place have been used.

Tying string.

Plastic string, which does not rot when wet, is used to tie loops (Figure 4.7) previously welded onto the plastic sheet to wire retainer pieces through holes in the concrete roof pieces Figure 4.6. Five sets of loops are attached at 500 intervals. Five loops are made in each set to allow for misalignments. After fitting, all the holes through which the string passes are closed with cement. When this system is used it is necessary to fit the plastic sheet before the inlet and slurry reservoir are built, in order to get access.

63

Plastic pipe

With this method the plastic sheet is supported from underneath by plastic pipes, which fit into the radial "V" grooves between each pair of concrete roof pieces (Figure 4.9). The pipe is low cost, ½" bore, stiff, black water pipe. The radial "V" grooves are not filled in but are made smooth using fine sand and cement to cover up any roughness which could puncture the sheet. This is important. The ends of the pipes have dowels put in them and are nailed into wooden blocks set into the walls immediately below the curved pieces.

Care must be taken at both ends of the plant as only a half "V" is formed by the roof piece. A full "V" can be formed by leaving a small gap of 10 - 15mm between the end and the adjoining roof piece and using cement mortar to form the full "V".

Gas outlet

The assembly of the gas outlet is given in figure 4.10. The inside faces of both steel flanges must be machined and smooth.

The pipe is passed through the hole in the tunnel roof beside the inlet before the plastic sheet is installed. It is held in position with a clamp and 'J' bolts set into the wall of the inlet pit.

The plastic sheet is clamped between rubber gaskets (made from motor vehicle inner tubes) and steel flanges using brass bolts that fit into threaded holes between the rubber gaskets. After tightening up the loose flange, the centre hole is cut out the same size as the bore of the pipe, using a sharp knife.

Cement is put round the outside of the pipe to seal it and prevent slurry leaks which would otherwise occur.

Practical experience with Tunnel Plants.

Six plants, four of the CT8 size have been built for customers in Nepal. All have worked well for the 1 to 4 years they have been built. Experience with one plant shows the necessity for the fillet in the slurry reservoir to hold down the roof sections against the internal gas pressure. All holes in the tunnel roof need to be closed otherwise slurry will ooze out under gas pressure.

Both systems described for holding the plastic sheet in place have been used but neither system is perfect. With the plastic pipe system care has to be taken to get the grooves smooth and to press the pipe firmly into position otherwise it can slip out sideways. The tying system works provided five ties are used. Three proved to

be insufficient to hold the sheet close to the roof and slurry collected in pockets between the roof and sheet. Access to the outer surface of the roof pieces is needed. Over 70 experiments to find a suitable locally available glue to attach the sheet in place have been unsuccessful. Currently a new system to hold the plastic in place is being tried. A pair of half-inch water pipes are made into an 'U' shape but with two cross pieces which are made out of stiff (3.5 ø GI) wire. This frame is pressed upwards tightly against the plastic sheet and the four ends of the pipes rest on bricks protruding into the plant immediately below the arch. Pairs are set at 500mm intervals and single wires used to connect the pairs (Figure 4.10). This system is the easiest to install. The gas outlet Figure 4.11 works well and no blockages have been reported. It is expensive to make and needs care in installation. The new system (Figure 4.12) is lower cost and much easier to install. It is being tested at present.

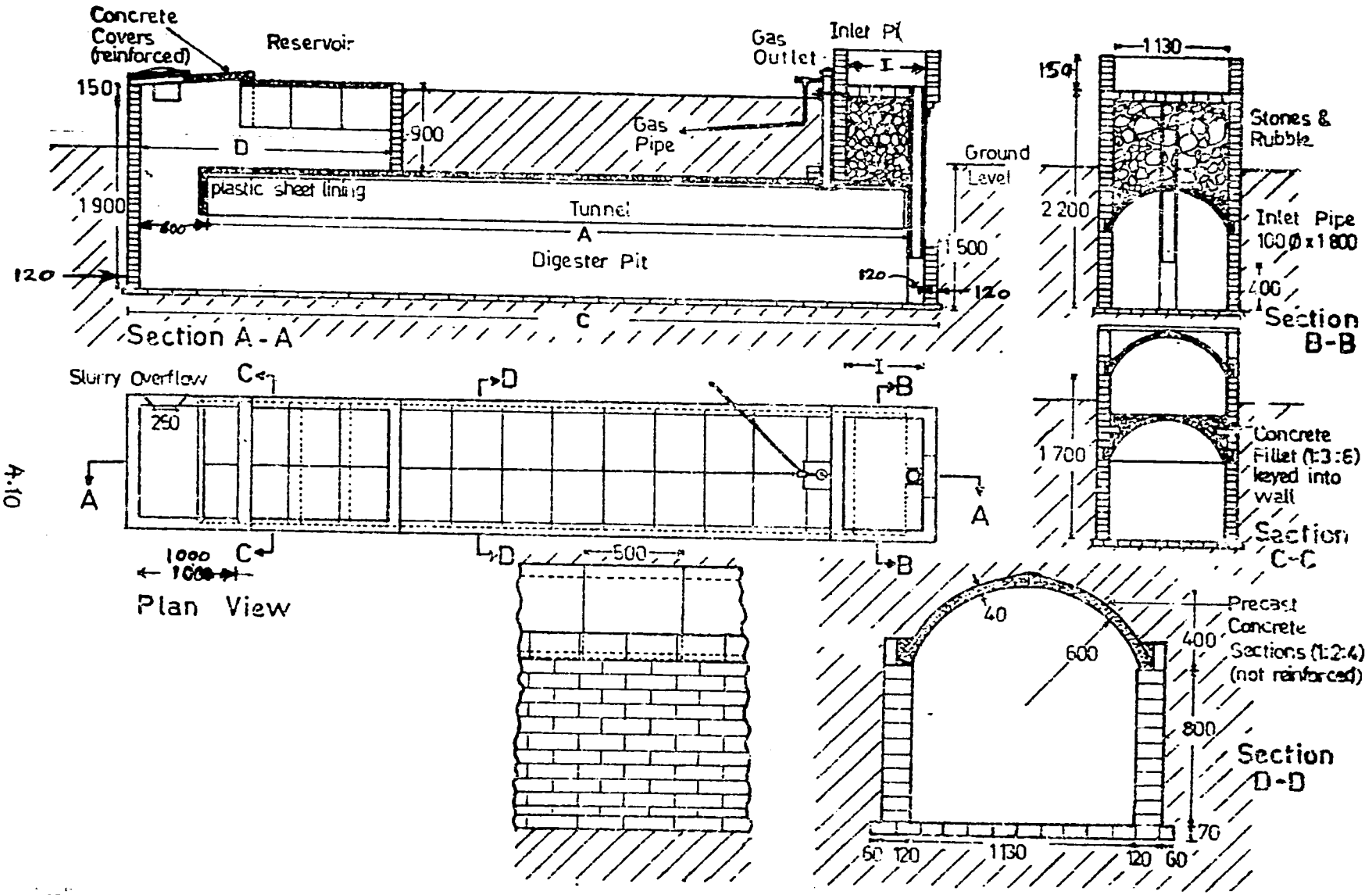

Figure 4.1 Tunnel-Plant Design (TP8)

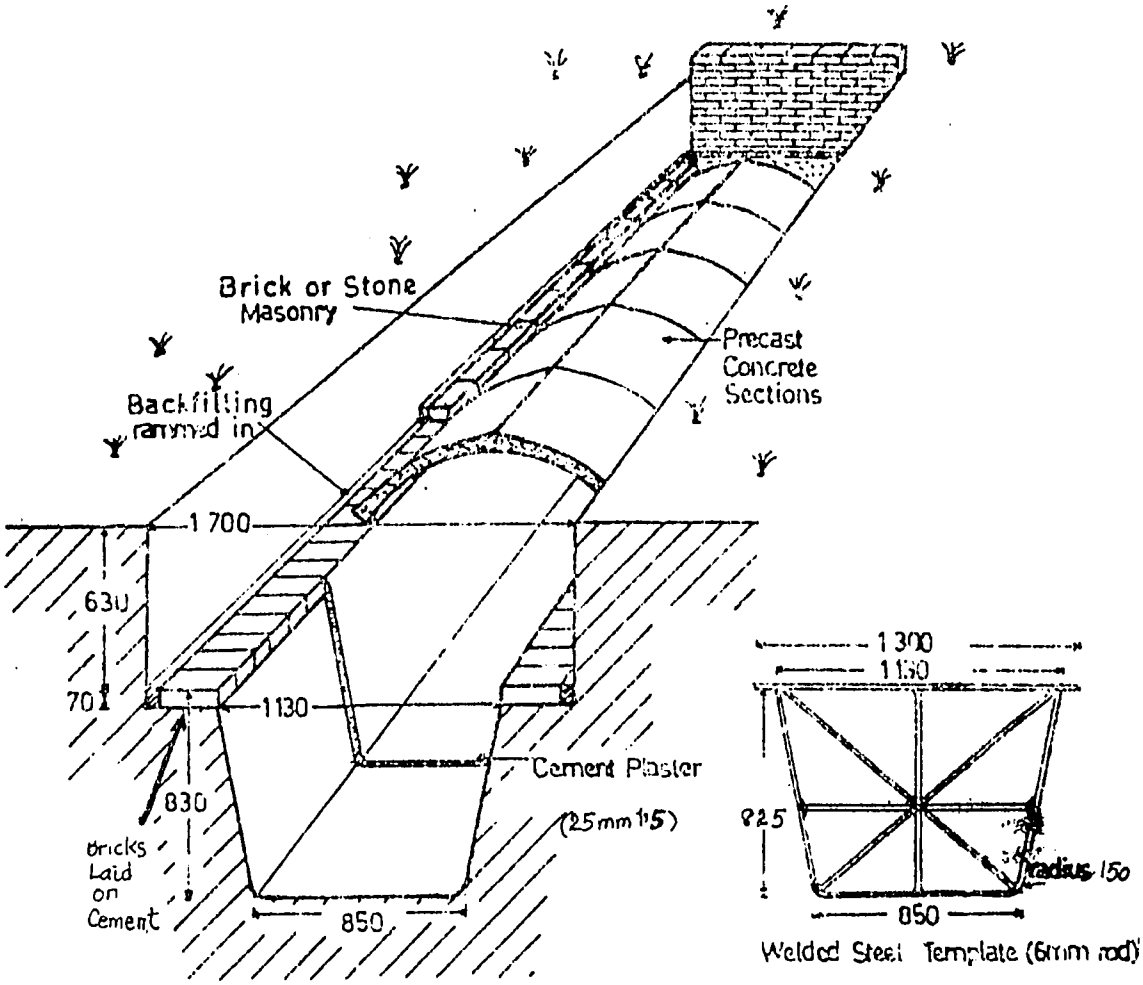

Figure 4.2 Tunnel Plant Design, with Plastered Trench

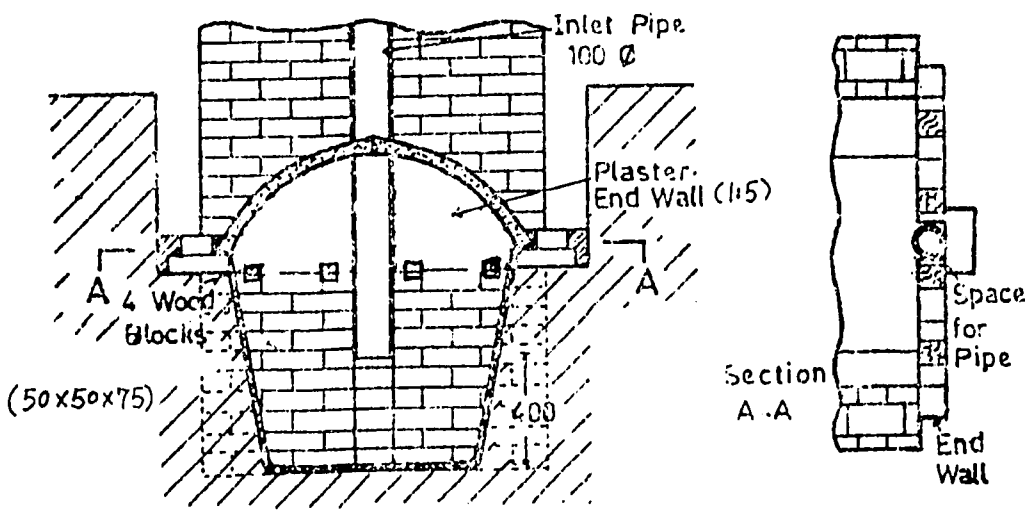

Figure 4.3 Inlet End Wall for Tunnel Plant

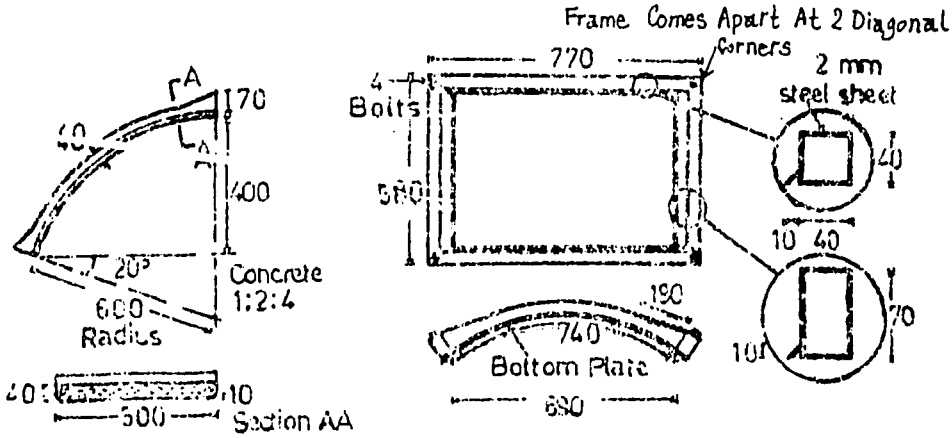

Figure 4.4 Precast Concrete Arch Sections for Tunnel

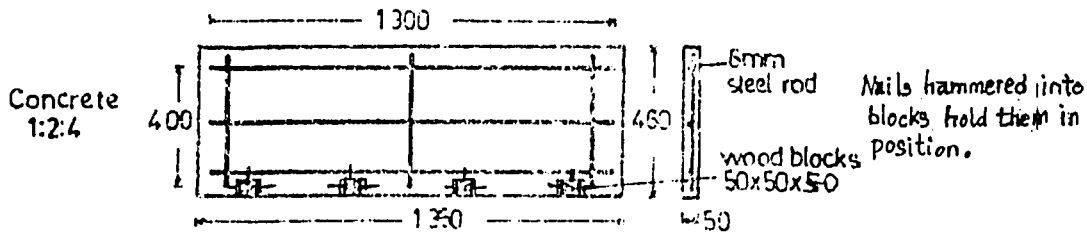

Figure 4.5 Partition Piece for the Outlet End of the Tunnel

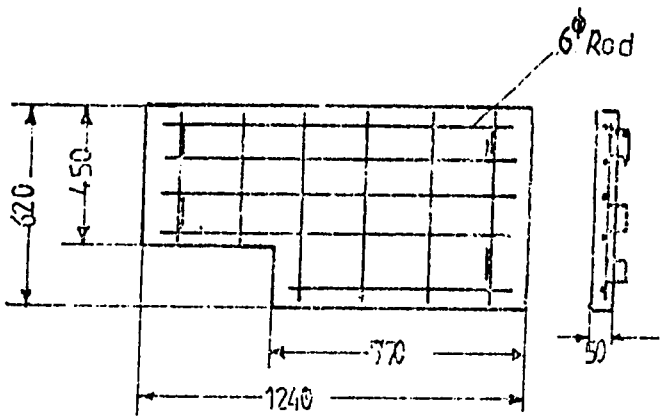

One piece each left and right hand

Figure 4.6 Cover for slurry reservior

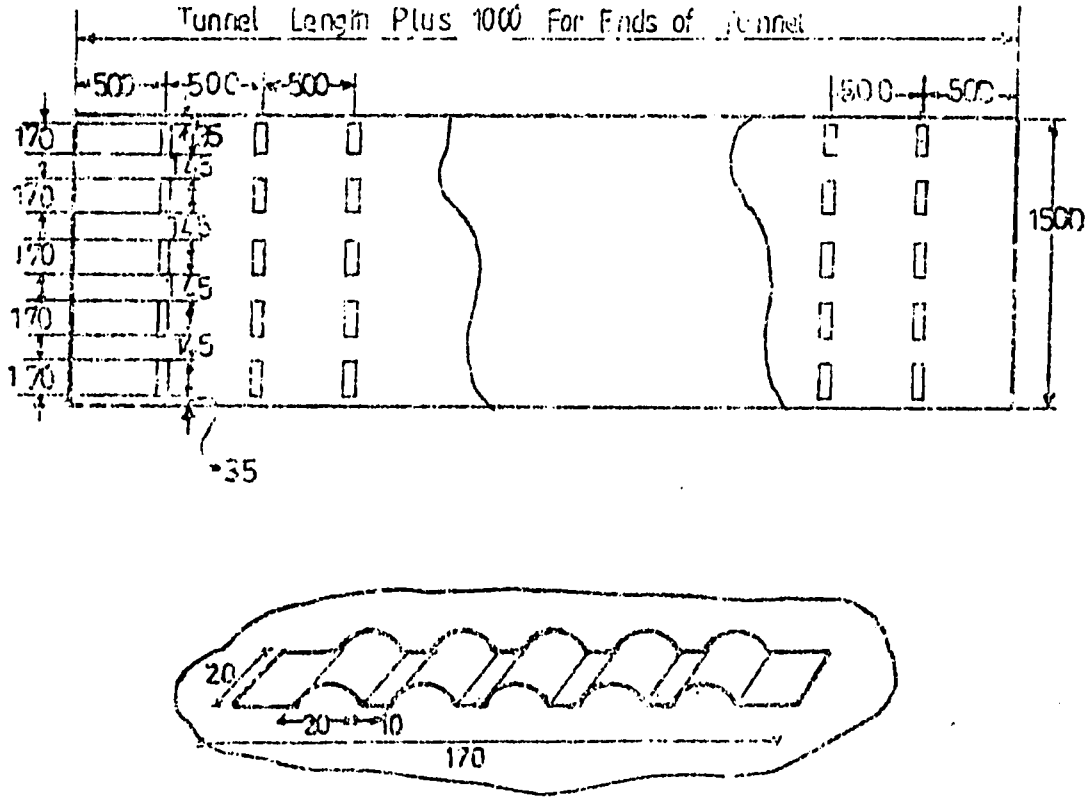

Figure 4.7 Plastic Loops Welded onto Plastic Sheet

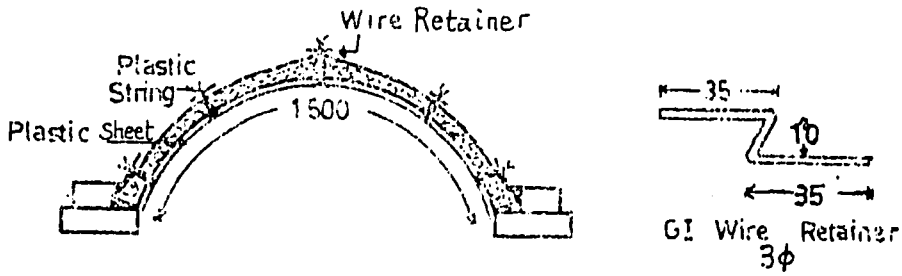

Figure 4.8 Use of Tying Strings to Hold Plastic Sheet in Place

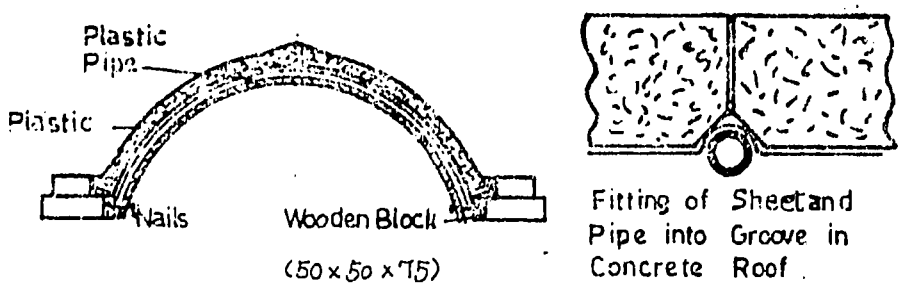

Figure 4.9 Use of Plastic Pipe to Hold Plastic Sheet in Place

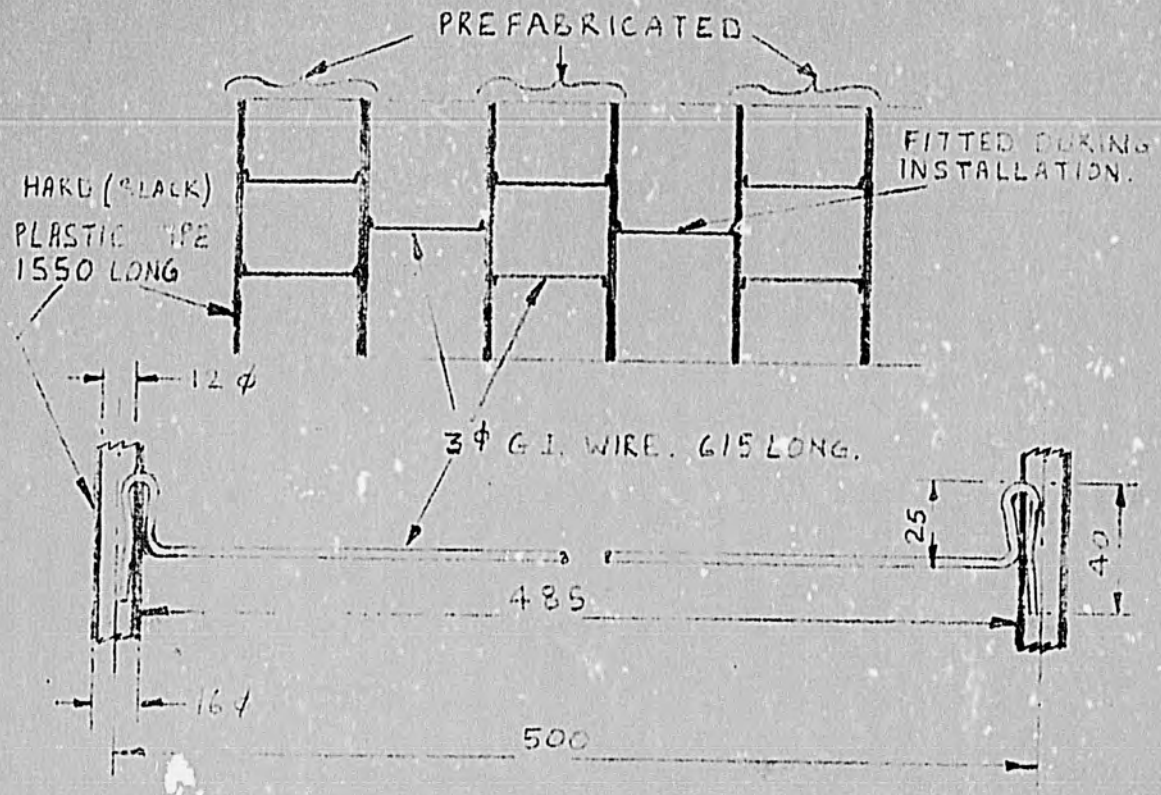

FIGURE 4:10. USE OF PLASTIC PIPE AND WIRE STRUTS TO HOLD PLASTIC SHEET IN PLACE

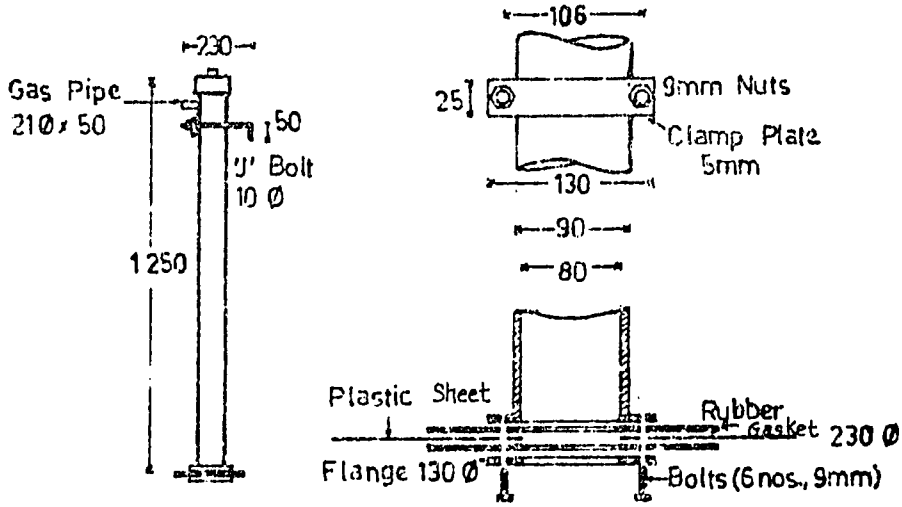

Figure 4.11 Gas Outlet Pipe and Clamps

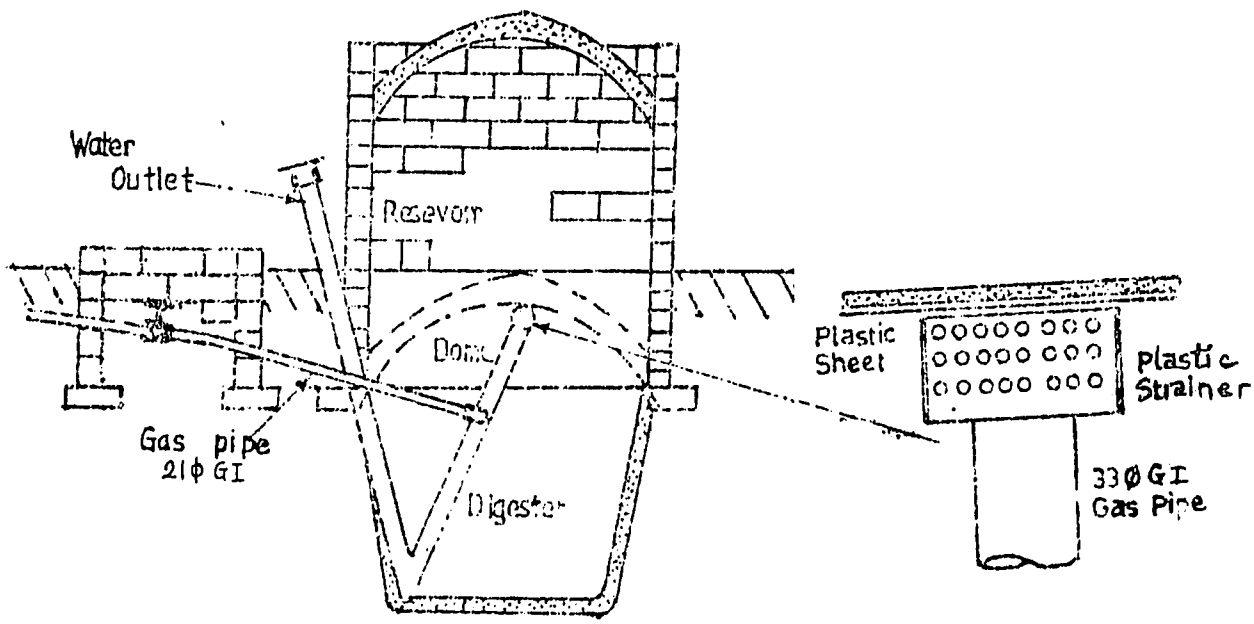

Figure 4.12 Alternative Gas Outlet for Tunnel Plant.

71

Chapter 5. Selection of Design, Size, Materials and Site **J. Finlay**

Designs

The aim in D.C.S. has been to make biogas plants that are low cost, but also efficient and maintenance free. Full details of the plants are given in chapters 2 Floating Drum plant, chapter 3 Dome plant, chapter 4 Tunnel plant, All three designs have been thoroughly tested using cattle dung fed in daily.

The floating drum design was the best known when D.C.S. started its biogas work in 1974. The concrete dome plant was introduced with the aim of eliminating the expensive gas drums which were difficult to transport to remote sites and gave a serious rust problem. It was also cheaper.

Finally, the tunnel plant was introduced to further reduce the cost and also because it was easier to build, eliminated the need for high plastering skill and used a thicker slurry, and so required a smaller digester volume. Later research indicated that thicker slurry also could be used in all plants although in practice it is only used in the tunnel plant at present.

Advantages and disadvantages of the three designs

Floating steel drum design

Advantages

1. Simple to build
2. Constant low gas pressure
3. Something visibly impressive to show friends

Disadvantages

1. Expensive
2. Rust problem on gas drum
3. Hard and expensive to transport gas drum off roads.
4. Hard to insulate and therefore depressed gas production in winter.

Special requirements

Steel plates.

Concrete dome design

Advantages

1. 20% cheaper than steel drum design (in Nepal)
2. Easy to transport anywhere
3. Easy to insulate

Disadvantages

1. Varying gas pressure

Special requirements

1. Acrylic Plastic Emulsion Paint
2. Specially trained skilled plasterers cum masons.

Tunnel Design

Advantages

1. 20% cheaper than dome design (35% cheaper than steel drum design) in Nepal.
2. Simple to build
3. Easy to insulate
4. Modular construction allows any size to be made
5. Pre-cast parts can be made and stocked during slack building seasons
6. Shallow hole.

Disadvantages

1. Varying gas pressure
2. In remote areas pre-cast parts may need to be made on site.

Special requirements

1. Strong plastic sheet
2. (Plastic welder if sheets are too narrow)
3. (PVC plastic glue if PVC sheet is used)

Choosing a design of plant

When choosing the most appropriate design for any particular situation certain points need to be considered:-

1. Availability of construction materials and skills, especially those items listed above under special requirements.
2. Local cost of materials.
3. Transportation of materials.
4. Water table, i.e. can a deep hole be dug without water quickly filling the hole?
5. Feed material to be used. D.C.C.'s experience is almost exclusively with cattle dung. Other materials could be used such as:
   i) pig dung washed into the plant with a low percentage total solids necessitating a large volume and plastering the digester to avoid leakage.
   ii) corrosive slurries such as night soil.
   iii) vegetable matter which will need to be manually removed from the plant from time to time.
6. Air temperature and whether or not insulation is needed.

Selecting the size of plant

Plant size clarification

In Asia two basic methods of classifying plant sizes are used:-

a) With floating steel drum design it is the nominal expected gas production per day in cubic feet. This is very misleading because gas production varys a great deal depending on several factors but especially daily slurry input (too often people put in too little) and slurry temperature (a reduction from 30°C to 20°C can reduce gas production by 50%).

b) With cement dome and tunnel designs it is the total volume of the digester under the gas storing roof.

These two systems are not directly comparable. However, they can be compared once the volume of slurry in the digester is known (in the cement dome and tunnel plants it is the average amount of slurry over a day i.e. the total volume less the average amount of gas stored which is called the "working volume").

Factors affecting gas plant size

There are five main factors which affect gas plant sizes.

1. Amount of gas needed.

It may not be possible to provide as much gas as desired but at least it is helpful to know how much is wanted:

In Nepal it is customary to have two meals a day consisting of boiled rice, lentils and curried vegetables. There may also be an early morning and mid-afternoon snack. It has been found that under these circumstances that it takes 0.20 to 0.40m^3 gas per person per day. Lights require 0.15m^3 per hour but may consume up to 50% more if the gas pressure is high. Engines use a maximum of about 0.45m^3 per horsepower per hour.

2. Amount of dung available per day.

All too often there is less dung available than expected therefore it has been found essential to measure the dung for at least 3 days in order to get a fair idea of the amount of dung available. It can be weighed or its volume measured. One litre of dung well pressed down is almost exactly one kg in weight.

A buffaloe, which is stable bound, can be expected to provide about 15kg dung per day
A cow or ox, " " " " " " " 10kg " "

Having given these figures it is still very important to actually measure the dung at each proposed gas plant site because it can vary so much. Too little dung equals too little gas!

3. Temperature.

Bacteria in gas plants are temperature sensitive and give reduced gas production at lower temperatures. Plants in the southern plains of Nepal operate at temperatures ranging over the year from 30°C to 20°C. This affects gas production by about 50%. There are ways to increase the temperature which are given in chapter 10.

4. Residency time.

The residency time is the working volume of a plant divided by the daily input mixture of dung and water. The longer slurry is kept in a plant the more gas can be obtained from it, but at a slower rate per day after the first approximately 40 days. A longer residency implies a larger digester is needed and this in turn increases the cost.

5. Slurry thickness.

Up to the present time it has been normal practice for steel drum and concrete dome plants to be fed a slurry mixture of dung and water in the ratio of 1:1 giving a total solids (TS) concentration of 8 to 9%. In the tunnel plant a ratio of 2:1 (12 - 13.5 T.S.) has been used. This meant that a tunnel digester could be reduced in size by 27% and yet hold the same amount of solid matter.
However, research has shown (Vol. II chap. 3 : 6) that slurry moisture between 6 and 1..5% has negligible effect on the rate of gas yield in any of the three designs of gas plant A.T.T. has used, so a thicker slurry can be used in any plant.

6. Cost.

The main controlling factor is the size of the digester which is affected by the slurry thickness used and residency and of course the amount of gas required.

75

Gas Production Calculations

For theory refer volume II chapter 3.

Working volume of digester	: V m^3
Daily input volume of slurry	: F m^3
Daily input weight of wet dung	: Wg Kg
Proportion of dry matter in dung	: DM %
(For fresh cattle dung DM = 20% approximately)	
Retention time	: R days
Feedstock concentration	: So kg/m^3
Gas production per day at STP	: G m^3 (STP)/day
Rate of gas production	: rg m^3 (STP)/kg m^3 day
Constant (fraction of volitile solids in feedstock)	: f
(For grass fed cattle and buffaloes f = 0.74)	

Retention time R is given by :

$$R = \frac{V}{F}$$ and is usually between 40 and 140 days.

The feedstock concentration So is given by:

$$So = \frac{Wg \times DM}{F}$$ and is usually between 80 and 140 kg/m^3

The rate of gas production per day rg is obtained from the graph "Rate of gas production vs Retention time" (Figure 5.1) once the retention time has been worked out and the slurry temperature is known.

The gas production per day at Standard Temperature and Pressure (STP) G is given by

$$G = rg \quad So\ V\ F \quad m^3\ (STP)/day$$

The gas production per day at any temperature is given by

$$\frac{G_{(STP)}\ (273 + \text{gas temperature } ^oC)}{273}$$

For example:

To find the gas production at 25°C

$$G(25^oC) = \frac{G_{(STP)}\ (273 + 25)}{273} = m^3\ (25^oC)/day$$

When there are two unknowns, i.e. when trying to work out both retention time and working volume, it can be done by superimposing a tracing of graph $rg = \frac{F}{R}$ (figure 5:2) on top of graph of rate gas production vs retention time at different temperatures (figure 5.1). See Example 2.

Example 1. What is the gas production that can be expected from a TP10 tunnel plant under the following conditions.

Working volume $9.0m^3$

Cattle dung fed in daily 100 kg = $0.100m^3$

Slurry temperature 25°C

Dung water ratio 2:1

Detention time $R = \frac{V}{F} = \frac{9.0}{0.100 + 0.050} = \underline{60 \text{ days}}$

Feedstock concentration $So = \frac{Wg\ Dm}{F} = \frac{100 \times 20}{0.150 \times 100} = 133.333\ kg/m^3$

From graph figure 5:1

At retention time = 60 days

and Temperature = 25°C

the third unknown can be found

Rate of gas production = $0.0025m^3$ (STP)/kgm^3 day

Gas production per day

$G = rg\ So\ Vf$

$= 0.0025 \times 133.333 \times 9.0 \times 0.74$

$= \underline{2.22\ m^3\ (STP)/day}$

77

At 25°C

$$G_{25^\circ C} = \frac{G\ STP\ (273 + 25)}{273} = \frac{2.22 \times 298}{273}$$

$$= \underline{2.42\ m^3/day\ at\ 25^\circ C}$$

Gas Production at STP = 2.22 m^3

Gas Production at 25°C = 2.42 m^3

Example 2

A farmer requires gas to cook for a family of 5 and requires two lights. One will burn in the kitchen for one hour a day and the other will burn in the living quarters for three hours a day. He plans to use a plant with 2:1 dung water ratio. The average ground (and therefore slurry) temperature is about 27°C. He only has 50kg of dung available per day. What size of plant is required?

Gas requirement per day

5 people @ 0.3m^3 / person / day	=	1.5 m^3 / day
4 hours of lighting @ 0.15m^3 / hour	=	0.6 m^3/ day
Total		2.1 m^3 / day

Feedstock concentration

$$So = \frac{dg\ DM}{F} = \frac{50 \times 25}{0.75 \times 100} = 133.333\ kg/m^3$$

Working volume of digester

$$V = FR \quad (\text{from formula } R = \frac{V}{F})$$

$$= \underline{0.075\ R}$$

Gas Production per day at STP

$$rg = \frac{G}{So\ V\ F} \quad (\text{from } G = rg\ So\ V\ F)$$

$$= \frac{1.3}{133.333 \times 0.075R \times 0.74}$$

$$= \frac{0.257}{R}\ m^3\ (STP)\ /\ kg\ m^3\ day = \frac{rg}{R}$$

Putting tracing of graph figure 5.2 on top of graph figure 5.1 and matching up the axis.

Mark where the two graph lines cross.

R - 0.257 is just above the 0.25 graph

27°C is proportionally between 27.5°C and 25°C graphs.

Draw line down to **Retention time** **R = 98 days**

Working Volume of digester

$V = FR$

$= 0.075 \times 98 = \underline{7.35\ m^3}$

The gas plant built should have a working digester volume of $7.35m^3$

From the table 5.1 SD100 = 7.1, CP10 = 9.0 and [illegible] = 7.6. The decision as to which plant to build will depend on other factors previously discussed in this chapter such as building materials available and cost.

	S D				C T					F P		
Plant type	100	200	350	500	10	15	20	6	8	10	15	20
Work.Vol.m^3	7.1	13.0	24.0	34.0	9.0	12.8	17.4	5.5	7.6	9.0	13.5	16.0

Table 5.1 Working volumes of standard size gas plants.

Building Materials

This section covers the commonly used building materials used in the construction of the three types of plant described in this book. Special materials and construction details relating to a specific plant design are included in the respective chapter dealing with that plant.

Digesters and associated masonary work can be made out of any of the usual building materials except those which deteriorate with moisture (e.g. unburnt bricks, lime and mud mortar). Choice is normally a matter of what is available at the lowest cost.

- Bricks. These must be burnt. Unburnt bricks will deteriorate in the presence of the moisture in the slurry. Walls made of poorer quality bricks, which are both weaker and more porus, may need to be plastered on the inside faces.

- Building stones. The stones need to be free from soil. Stone walls tend to be up to twice the thickness of brick walls and require considerably more mortar.

- Sand. This must be clean and free from vegetable matter and mud etc. otherwise the cement mortar will be weak. Sand can be tested for cleanliness very easily. A bottle is filled with $^1/_3$ sand and $^2/_3$ water and then shaken. The mixture is allowed to settle until the water is clear. If the impurities (mud etc) form a layer more than 6% of the total height of the sand then it is necessary to wash the sand before using it. The sand is put in a container, e.g. a wheelbarrow and water is flushed through it to wash away the impurities. Fine sand requires a higher cement to sand ratio to give a similar strength mortar.

- Gravel, broken stones. Since most of the concrete sections are only between 40 and 80mm thick the gravel or broken stones used as aggregate should be between 5 and 20mm in size. It should be screened by passing it through wire screens with the appropriate sized holes. It should be free from vegetable matter and soil etc.

- Cement. Ordinary Portland cement is quite satisfactory. Additives are not necessary. If the cement is stale, i.e. if it is lumpy, then it will be weaker and therefore extra should be added to the various mixes. Cement is usually packed in 50kg bags (35 litres). However, some bags, such as those made from jute sacking, tend to leak out the powder. They may only contain 45 or even 40 kg due to wastage in transit.

Construction Techniques

Cement mortar should be the same strength as the bricks or stones it binds together. A ratio of 1:6, cement to sand, is average, although the ratios may vary from 1:9 to 1:4 depending on the quality of the sand and cement, and bricks or stones. Strictly speaking ratios are by dry weight but in villages this is impossible. In practice ratios are measured by volume and this is perfectly satisfactory.

Concrete used in the D.C.S. designs is normally a 1:2:4 mix of cement, sand and gravel, although a mix of 1:3:3 mix which gives a more compact mix is used for the concrete dome. Concrete must be carefully compacted to avoid air pockets (6% air voids in concrete means a 20% loss in strength - Merrit). The cement, sand and gravel must be thoroughly mixed and then the minimum amount of water used to make it workable. It needs to be cured for at least 7 days before any load is put on it by keeping it damp by covering with wet sacks or covering with water. Small sections such as tunnel roof pieces can be cured under water, in a pond or stream, after they have set for 24 hours.

Construction plaster. This is a 25 to 50mm plaster applied directly onto the soil for the walls and floor of both the cement dome and the tunnel plants. Well over 500 plants have been built using this method and so far there have been no reports of failure in this system of construction. The cement dome design calls for three layers each 10mm thick of 1:6, 1:4, 1:3 cement sand mix. The tunnel plant calls for one 25mm layer 1:5.

Construction Features

There are several common construction features.

Inlet pit. (Figure 5.3) This pit is required for the daily mixing of the dung with water. For convenience it is designed to hold the correct amount of daily slurry, with an additional 75 to 100mm in the height of the sides to prevent the slurry being spilt while it is being mixed. The inlet pipe is set in the floor and there must be no obstruction from any side wall which would prevent a pole or rod being pushed down the pipe in case of any blockages. A plug needs to be provided for the inlet pipe. Various things can be used such as a wood plug, a metal plate or a stone wrapped up in a piece of sack cloth. A removeable sieve can be fitted to the inlet pipe to prevent straw and lumps entering the digester. The floor of the pit is level. A hole in the side wall, fitted with a plug is made to facilitate the washing out of the pit and removal of rainwater which could otherwise enter the plant and dilute the slurry. The inlet pit should not be built on soil that was replaced after construction because this may well sink in time and then rain can break the inlet pipe.

Traditional mixing pits are 400 to 500mm deep. However, shallower pits (150mm deep) have the advantage that the mixed slurry can be solar heated before being fed into the digester (refer Vol.II chapter 6) resulting in much higher gas production.

Inlet/Outlet pipes. Experience has shown that 100mm diamter pipes are the best for both inlet and outlet pipes. This is irrespective of plant size and whether 1:1 or 2:1 slurry ratio is used. Smaller pipes tend to have frequent blockages. Larger sizes add unnecessary expense. Any low cost pipe can be used, e.g. asbestos cement, concrete or burnt clay. It is essential that there are no bends in the pipes, as blockages easily occur in them.

Slurry Overflow

In some designs of biogas plant, the digested slurry leaves the plant through a gap in the top of the digester pit or slurry reservoir wall. This gap should be at least 150mm wide and be tapered away from the inside, like a bell mouth (Figure 5.3). This arrangement reduces the tendancy of the slurry to dry out and block the gap.

Slurry Mixing Tool

Many people in Nepal mix the input slurry by hand, as cattle dung is not considered obnoxious. This practice is not recommended, as dung often contains patenogenic bacteria. A slurry mixing tool (Figure 5.4) has been designed, similar to a rake. The wire mesh at the end can be used to break up lumps of dung and also to trap straw and other material that may cause scum problems.

Slurry Mixing Machine

The mixing machine used in Nepal (Figure 5.5, 5.6 and Table 5.2) is an adaptation of an Indian design (KVIC, 1972), which, in turn, is based on a machine used to break up pulp for paper making. The slurry flows around the trough, driven by a hand operated paddle wheel, which breaks up lumps as the paddles pass over a bar set in the floor. A course sieve removes straw and other large items.
The paddle wheel, of welded steel, is bolted onto a shaft of GI pipe. The beater bar is set in the floor with a gap of 10mm between it and the bottom of the paddle wheel. The shaft runs in hard wood bearings soaked in oil. The radius at the front of the paddle wheel can be easily made by attaching a piece of wood which protrudes 25mm to one of the paddle blades and using this as a guage. Covers are usually fitted over the paddle wheel to avoid splashing.

A channel can be made in the floor of the machine at the lowest point to collect sand etc., which can be removed via a 100 ø hole in the wall. Plugs need to be provided for both this hole and the inlet pipe hole. The expense of a mixing machine is usually only justified for large plants. It is normally operated with all 1/2, 1/3 or 1/4 of the daily input slurry which fills to about the top of the slope beside the paddle wheel. Too much or too little slurry will make the machine difficult to operate.

Because the slurry in mixing machines is deep it cannot easily be heated using solar energy. Instead, the water used to make the slurry can be put in uncovered tins or buckets which are set in the sun from morning to mid-afternoon. Tests have shown that if this is done and there is no wind and the air temperature is in the region of 16° to 20°C then the water temperature will rise from about 15° to 25°C. This is a significant rise of 10°C which will increase the slurry temperature and result in increased gas production if it is done daily.

Addition of a latrine.

In Nepal and for cultural reasons it has, so far, been rarely acceptable to have a latrine attached to a biogas plant. However, where possible it should be encouraged as it improves sanitation and increases gas production as it is rich in nitrogen. A latrine can be easily fitted using a separate pipe which goes into digester near the inlet. It should be at least one third down the side of the plant (to save a lot of digging going deeper) and protrude at least 500mm into the plant to get the night soil and water mixed in with the slurry.

The base of the toilet must be at least as high as the floor of the inlet pit to allow easy flushing. Whether a water seal is used in the latrine or not, there must be some means of access for clearing the pipe to the digester in case of a blockage. This is important. To prevent too much water entering the plant the flush water should be restricted to one litre per user. The floor of the latrine should slope away from the bowl to a drain hole in the wall so that when cleaning the floor with water any soil or sand brought in on peoples feet and also the water can get away without entering the digester.

With steel drum plants the total daily input from the latrine should not exceed 15 or 20% of the daily feed to the plant otherwise the slurry may become too corrosive and rust out the steel drum rapidly.

If the outlet slurry from the gas plant appears to be thin due to dilution by flush water etc., in the latrine then this can be compensated by making the cattle dung slurry thicker. However, sufficient water must be added to make the cattle dung fluid and to break down all lumps.

Compost pits or slurry collecting tanks

Unless the old slurry (effluent) coming out of the plant is taken directly to the fields each day, e.g. by putting it into an irrigation canal, it must be stored until required. Compost pits or slurry collecting tanks are usually dug close to the plant so that the effluent can flow directly into them. Masonary sides to the pits are not essential but they do prevent weeds growing into the compost. For the sake of safety it is suggested that compost pits are not more than 800mm deep.

The volume of the pits should be sufficient to receive the amount of effluent put in per day multiplied by the number of days between emptying pits. The slurry volume will reduce as moisture evaporates or soaks into the ground and this can accommodate any compost materials such as animal bedding which may be added.

Selection of gas plant site

Every gas plant site is different. Assuming the ground is suitable for digging a digester pit, a careful selection of the best site has to be made considering personal preference and technical points.

Technically, the selected site preferably should be:

1. Close to where the gas will be used. Gas pipes are expensive.
2. Close to supply of dung and water to save carrying them.
3. Close to compost pit or slurry tank so that old slurry can flow there without handling.
4. At least 10 to 15 metres away from shallow wells to prevent contamination.
5. Some distance from any trees whose roots might grow into the digester and cause damage.
6. In the sun to keep the plant warm.
7. Protected from cold winds that cause heat loss.
8. Not liable to floods which could dilute the slurry and damage the plant.

An example of a selected site is given in figure 5.7.

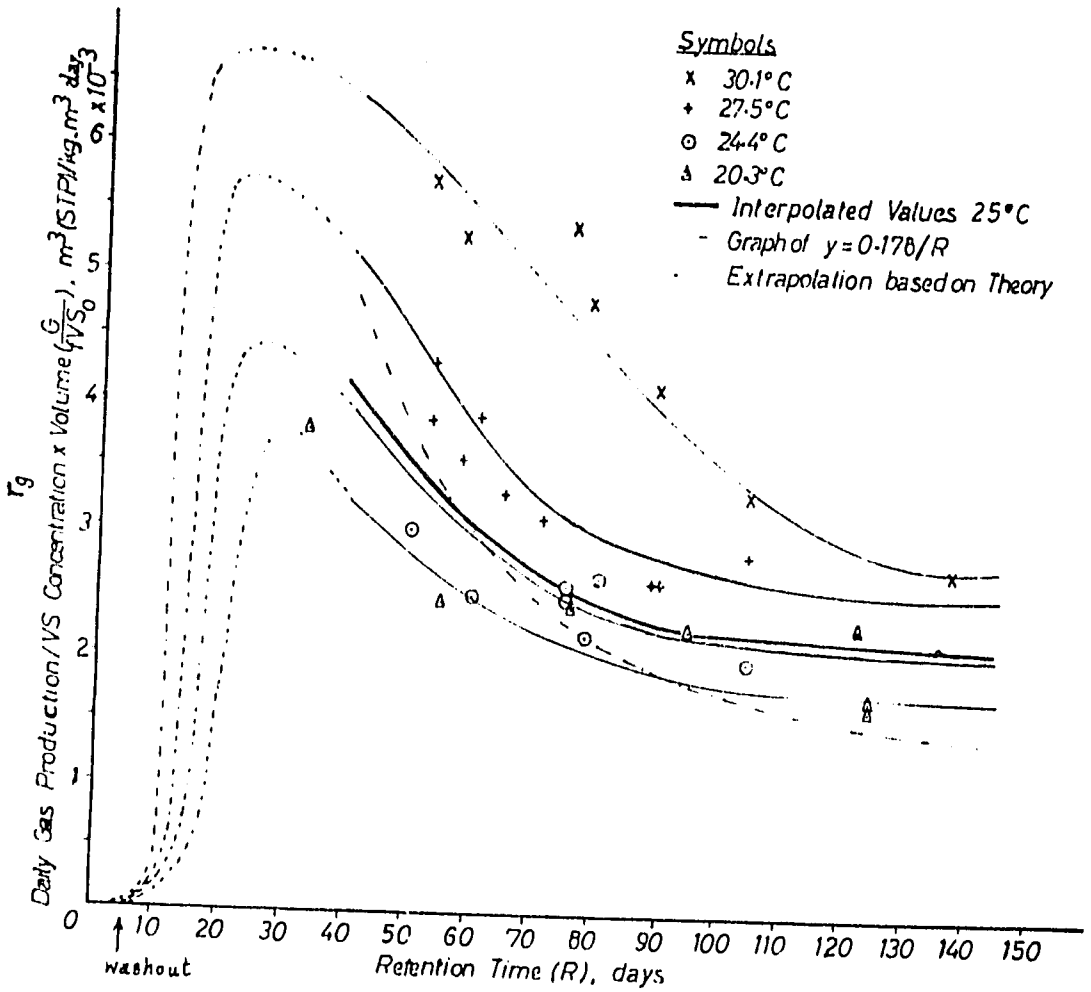

Fig. 5.1 Rate of Gas Production vs. Retention Time
(Source: Vol. II, Ch. 3, M. Lau-Wong)

85

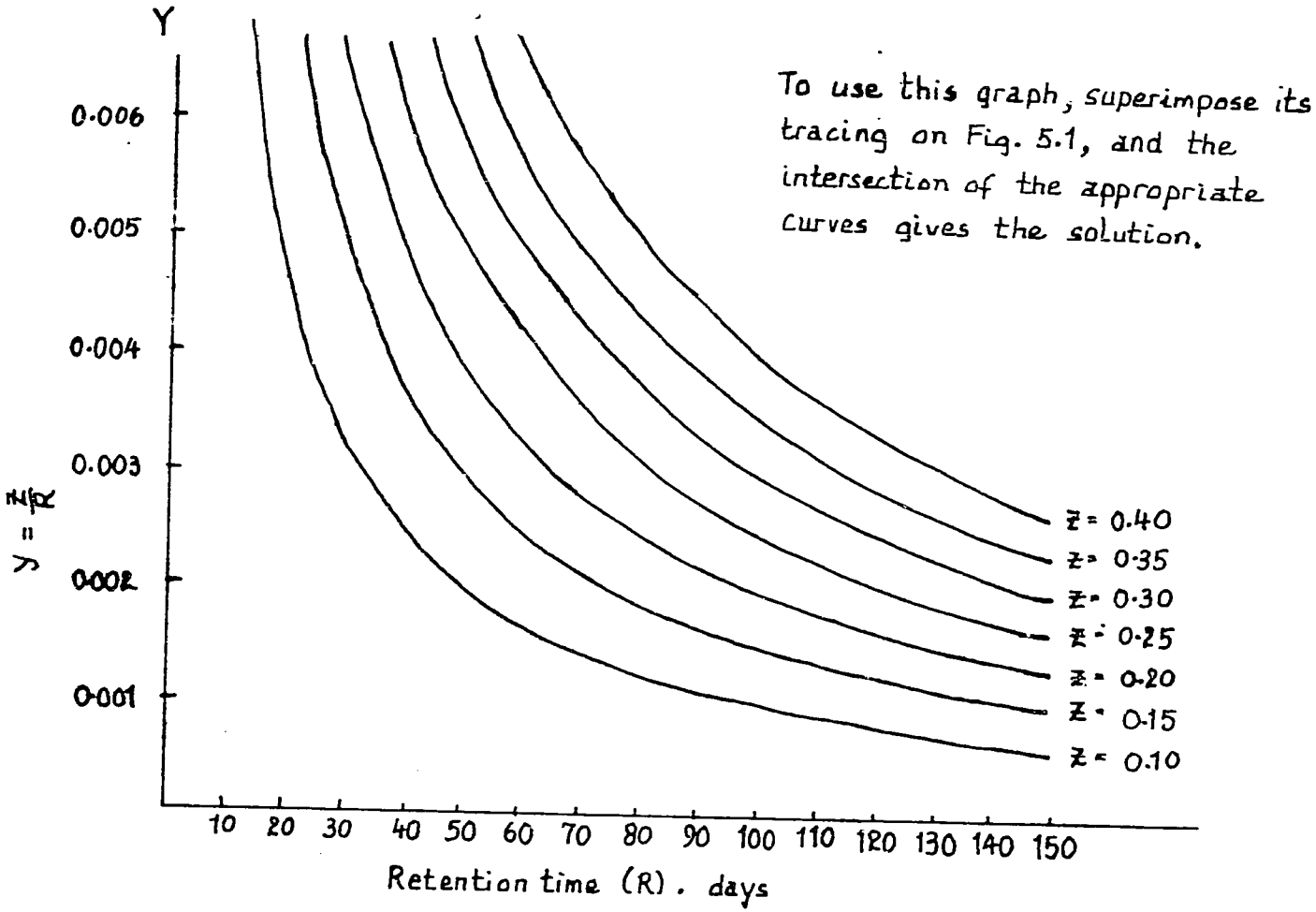

Figure 5.2 Graph of $y = \frac{z}{R}$ (M. Lau-Wong)

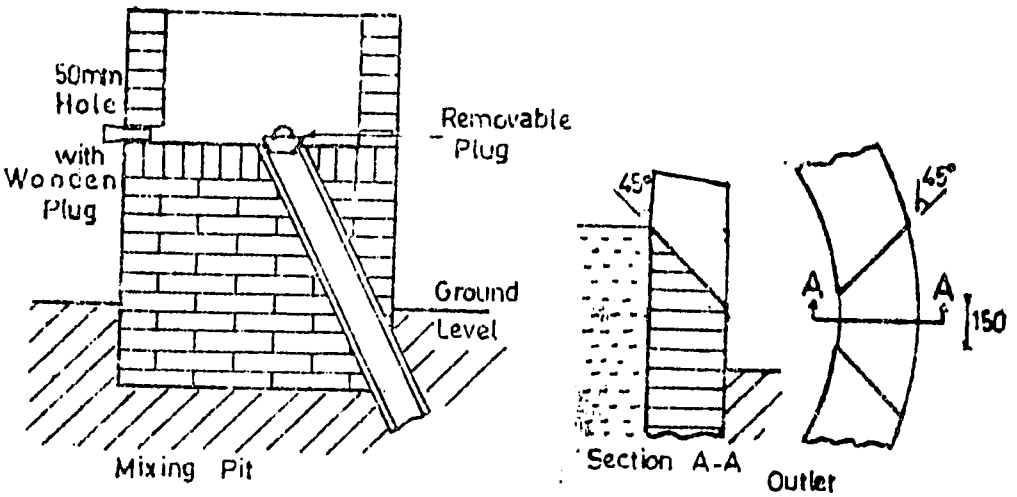

Figure 5.3 Details of Inlet Pit and Slurry Overflow

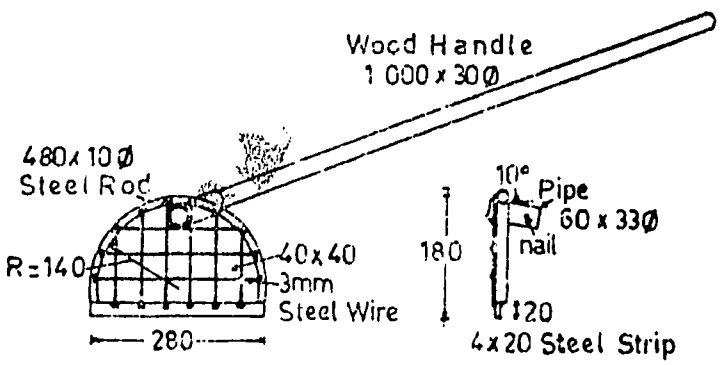

Figure 5.4 Slurry Mixing Tool

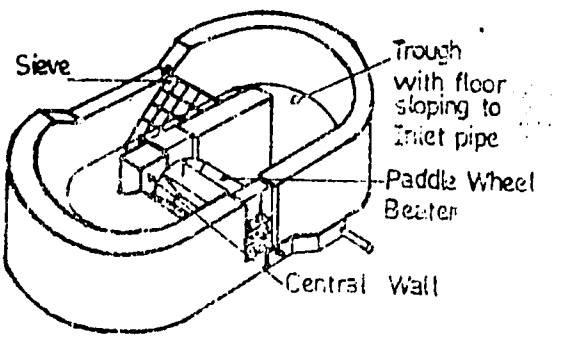

Figure 5.5 Slurry Mixing Machine

Bricks	
Cement	
Sand	
Aggregate	
Paddle Wheel	Mild Steel 3mm: 280 x 4000; 10 blades: 115 x 274
Beater Bar	Steel Angle: 310 x 40 x 40 x 6
Shaft	GI Pipe: 630 x 270
Bearings	2 nos. 2 blocks of wood: 110 x 200 x (50 + 100)
Bearing Covers	2 nos. 2.0 mm steel, boxes: 110 x 200 x (125 to 150)
Bolts	4 nos. 360 x 120, with anchor rods and nuts.
Handle	305 x 40 x 6 steel bar; 130 x 200 rod; 115 x 27 ø GI Pipe.
Seive	Steel rod. 120, 460 x 280; 6 rods x 7 rods lattice x 6ø

Table 5. Materials for Standard Slurry Mixing Machine

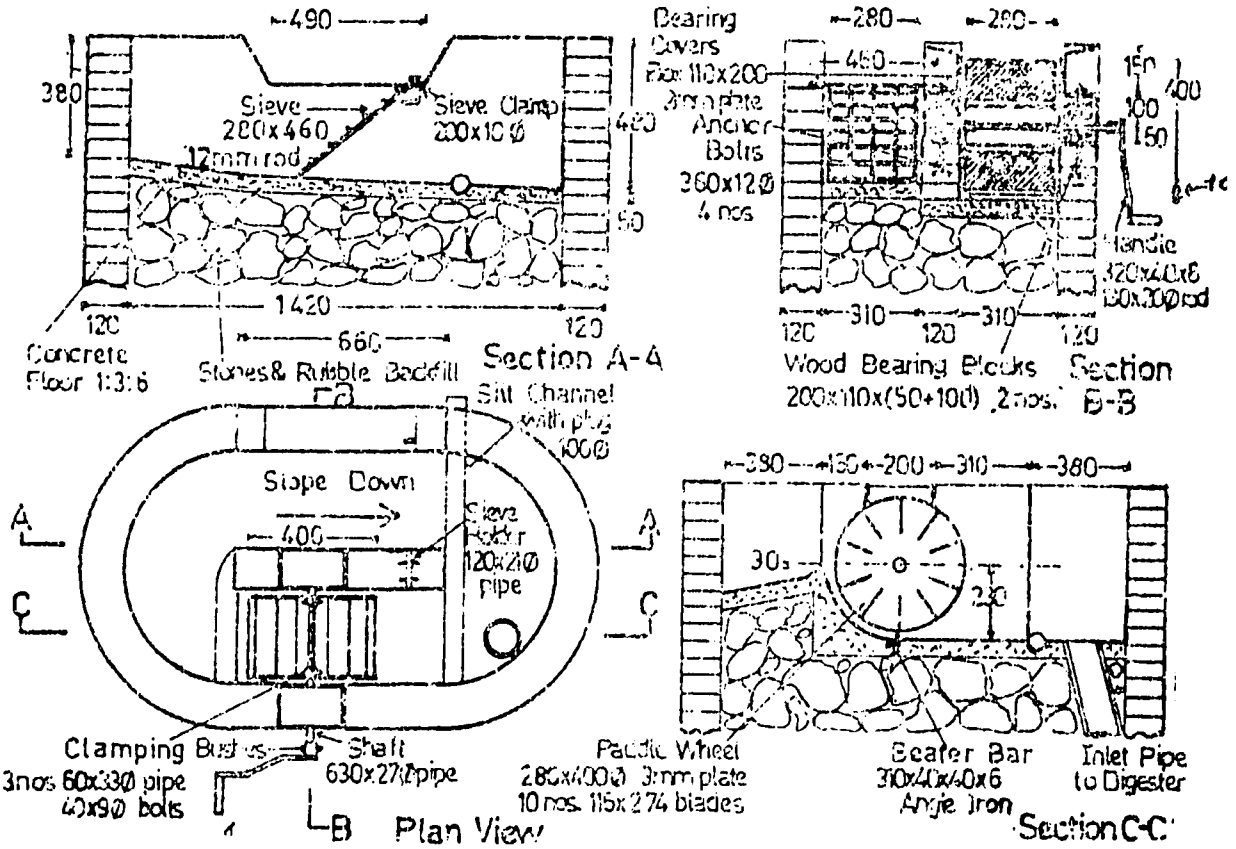

Figure 5.6 Detailed Drawings of Slurry Mixing Machine

98

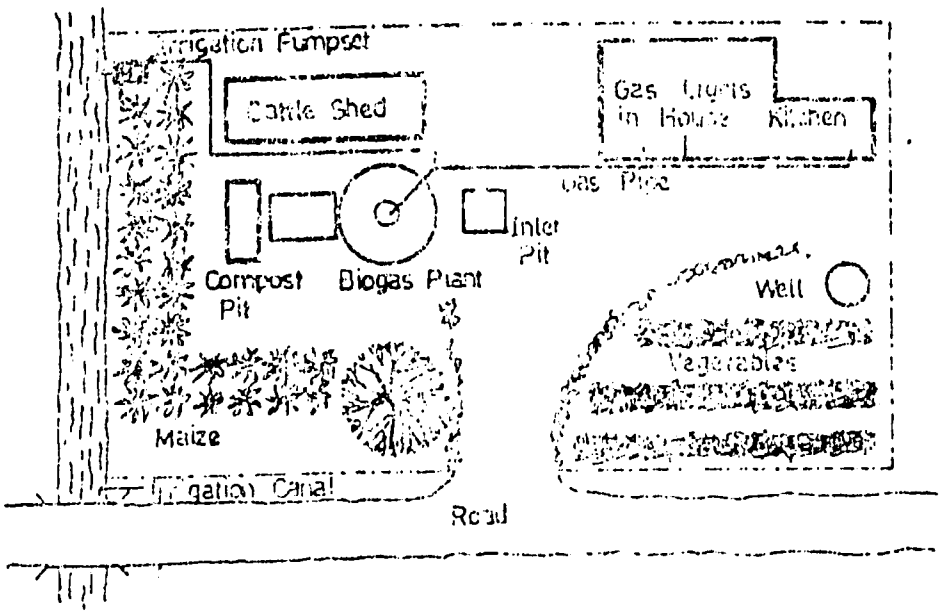

Figure 5.7 An Example of Site Selection for a Biogas Plant (United Nations ESCAP)

Chapter 6. Gas Piping and Accessories

J. Finlay

Biogas is taken from the gas plant to where it is to be used through gas pipes. Galvanized iron (GI) pipe is the most commonly used pipe in Nepal as it is readily available and cannot readily be cut by knives or rodents or damaged by sun light as is the case with plastic pipes. Pipework, especially joints, must be done well to avoid leaks. This is especially true with dome and tunnel plants when the gas pressure goes up to about 1200mm WG.

Biogas contains moisture, which condenses into water especially in underground pipes near the gas plant. This must be drained from the gas pipes otherwise it will collect and block the pipe. Therefore, all pipes must slope towards a trap and drain (Figure 6.1). The recommended slope is 1:100 but steeper slopes can be used. Failure to slope the pipes and provide drains are common faults. Most pipes are laid underground from the plant to the house. This is simple and is out of the way.

There is often confusion over pipe size because GI pipe sizes refer to the nominal bore size in inches whereas the plastic pipe sizes refer to the outside pipe diameter. Refer table 6.1.

Gas piping is expensive and it is important to keep the length as short as possible.

Galvanized iron (GI) Pipes			Plastic Pipes	
Quoted size inch	ID mm	OD mm	Quoted size = OD mm	ID mm
1/2"	16	21	20	15
3/4"	21	27	25	19
1"	27	35	32	24
1 1/4"	35	42	40	30
1 1/2"	41	48	50	38

Table 6:1 Common pipe sizes

Note: The OD of GI pipes and the ID of plastic pipes vary depending on the pressure the pipe is designed to take.

Plastic pipes

Originally many plants built by D.C.S. had plastic piping but because of various problems it is only used on very rare occasions now, such as, where a very long pipe run is required. In this case it is cheaper to buy, but careful supervision is needed to see it is installed correctly.

Only the best quality plastic pipes should be used. Recycled plastic pipe (recognisable by the rough surface on the inside of the pipe) should not be used as it will be hard to make good joints. Plastic pipes must be laid deeply and properly in sand, otherwise rodents (e.g. rats and porcupines) may eat it or it can be damaged by heavy vehicles passing over it or cut during agricultural operations such as ploughing. Care must be taken, especially with small pipes, that the pipe is laid flat in the ground and not in waves because water collects in each hollow and causes serious blockage problems. If the pipe is above ground then there is a danger, unless it is protected, of damage from the ultra violet rays of the sun, which causes it to crack and also mechanical damage, e.g. being hit. The pipe must be well supported to prevent it sagging and collecting water. A difficulty with plastic pipes is making gas tight joints with steel pipe. It can be done with care. The plastic pipe is heated until soft. The mouth of the pipe is enlarged a little with a slightly tapered piece of wood. The pipe is then pressed on to the steel pipe and bound on with wire while still hot. In this way a 25 Ø plastic pipe could be fitted onto a ¾" GI pipe.

Other parties in Nepal use plastic pipe extensively with tunnel plants. They have not experienced D.C.S.'s problems with rodents and mechanical damage etc., and have found that the high pressure gas forces condensate along the pipe to a drain. The advantages claimed are minimum leaks because there are so few joints, the pipe is lower cost and it is quicker to install.

Galvanized iron (GI) Pipes

These are commonly used as gas pipes and there is usually someone available who is familiar with laying these pipes for water. The main difference is that the pipe must slope to a drain and the joints must be of a very high standard to prevent leaks. Joints are made using a jointing compound or stiff paint, and jute fibre wound round the threads. If some red lead powder is added to the jointing material it will turn black if there is a leak due to the traces of hydrogen sulphide in the gas. This is not essential but it is helpful when looking for a leak.

Various fittings are needed and a selection of the most common ones is given in table 6.2

Often a gas plant is working well but the reason why the farmer does not have enough gas is due to leaks in the gas pipe. It cannot be stressed too much that all joints must be of a high standard especially for high pressure gas from dome and tunnel plants.

Being galvanized no additional protection is required for the pipes except where the soil is very acid. In that case the pipes should be well covered with paint or tar. In steel drum plants the gas pipe is attached to the support guide as shown in Figure 6.2. A socket is welded onto the support guide pipe. (A nipple is not used as the external threads are likely to be damaged during handling).
By using this system a certain flexibility is given to the gas pipe which makes it much easier to lay it at a slope of 1:100.
With both dome and tunnel plants it is wise to have a union coupling near the gas outlet in case slurry enters the gas pipe and it has to be dismantled and cleaned out.

Fitting	Name	Use
	Socket Coupling	To join 2 lengths of pipe.
	Elbow (L)	To join 2 pipes at 90°. Either same or different size of pipe (reducing elbow).
	Tee (T)	To join 3 pipes, branch at 90°. Branch can be for same or smaller size of pipe.
	Reducing Socket	To join 2 different sized pipes.
	Cap	To close a pipe
	Plug	To close a socket
	Union Coupling	To join 2 pipes, without turning either pipe.
	Nipple	To join fittings.

Table 6.2 Commonly used GI pipe fittings.

Gas Pipe Size Selection

The size of gas pipe required depends on two factors: the length of the pipe and the amount of gas required per hour. If a small pipe is used where a large one is needed then the gas pressure will be reduced owing to frictional losses. Too large a pipe causes unnecessary expense.

Household gas appliances are designed to work most efficiently at about 65 to 100mm WG gas pressure. Engines require about 75mm WG.

Most installations in Nepal including branch pipes to lights use about 40 to 50 metres of pipe. The main gas pipe to the house will be shorter by quite a bit as it excludes the branch pipes. The maximum amount of gas required per hour varies on what burners and lights are installed. Usually it will fall between 1.0 and 3.0 m^3/hr.

Dual fuel engines use between 1.5m^3/hr for 5.5 HP up to 3.4m^3/hr for 8 HP engine. Floating steel drum plants produce low pressure gas, usually about 60mm WG. Figure 6.3 gives the correct size of pipe for normal household installations. The following example shows how to use the diagram -

A house has:

3 burners	at .450m^3/hr.	=	1.35 m^3/hr (max.)
4 lamps	at .160m^3/hr.	=	.64 m^3/hr (max.).
	Maximum gas demand	=	1.99 m^3/hr

Length of pipe to burners, which are all located in one place = 25 metres.

Referring to figure 6.3, the point "a" corresponds to a rate of gas flow of 1.99m^3/hr and length of pipe of 25 metres. It will be seen that a $^3/_4$" GI pipe is needed (Plastic pipe equivalent 25mm. Refer table 6.1). This does not mean that all piping is $^3/_4$" GI. It does mean it is required from the gas plant to where most gas is used, i.e. the burners. Branch pipes to individual fittings, i.e. lamps, can be ½" GI pipe. In view of the relatively high gas pressure in dome and tunnel plants it has been found that ½" GI pipe is adequate for all normal household applications.

Gas taps and valves

One main gas valve is usually placed beside the gas plant for shutting it off. Taps or valves are used for appliances and sometimes for the condensate drain. The type of valve used usually depends on what is available and suitable at reasonable cost.

Gate (Full way) valve (Figure 6.4)

Gate valves are used in water systems and are usually readily available. D.C.S. has used many of them for all applications. Usually they are rather expensive. Farmers who have never used a valve before tend to overtighten them and break the spindle.

Ordinary water taps

Water taps are not used because the gas pressure is not sufficient to open the washer used in these taps.

Quarter turn gas taps (Figure 6.5)

These are commonly used for low pressure gas. D.C.S. had the taps held together with a spring and split pin instead of a nut so that the plug would always be held firmly in position even if wear took place. These taps show clearly whether they are on or off. If the handle is in line with the pipe the tap is on and if it is given a quarter turn so that the handle is across the pipe then the tap is off. The tap in figure 6.5(1) can be put in a gas line or used for a condensate drain, whereas 6.5(2) is suitable for a rubber tube to be attached, for a burner.

This type of tap is currently used for all floating steel drum plants. The locally available quality are not satisfactory for the dome and tunnel plants as they leak due to the high gas pressure.

If a tap becomes stiff it can be oiled by pulling the gas tap handle against the spring and pouring lubricating oil around the handle and into the hole.

Vegetable oils, e.g. linseed, sunflower, mustard seed oil, should not be used. These oils become sticky in time and make things worse rather than better.

D.C.S. taps for high pressure gas

D.C.S. has designed its own taps using nitrite rubber 'C' rings to give the seal instead of brass against brass in the quarter turn taps. Quite a number of taps to the design in figure 6.6 have been used and after strengthening the spindle and handle they have proved to be much better than the quarter turn taps. The bottom ring comes off on occasions and with so much turning there is a likelihood of the upper ring wearing. To overcome this problem a lever action piston valve and tap have been developed (figures 6.7 and 6.8). Prototypes have been made but the valves have not been field tested yet.

When making gas taps it is very important to use lead free brass. The traces of hydrogen sulphide in the biogas combines with moisture and attacks the lead causing leaks.

Ball valves

Ball valves made for biogas are excellent if they are available (Figure 6.9). The problem for a local workshop is making the balls smooth, spherical and with a hole and slot. A quarter turn opens or closes the valve.

Condensate drains (water traps)

Condensed moisture lies as water in gas pipes and must be removed regularly to prevent blockages. Drains must be placed at the lowest part(s) of pipework (Figure 6.1) for this purpose.

A.C.T. uses two designs of drains; draincock for shallow applications and dipper pipe for deep applications.

Drain cock. Figure 6.10

Condensate collects in the 150 long branch pipe. A valve can be put on the end but this is expensive. The system illustrated is low cost and effective. To operate it the brass screw is released until the condensate passes through the small side hole. The screw is tightened up after all the condensate has come out.

Dipper pipe. Figure 6.11

The dipper pipe device was designed for use with floating steel drum plants with gas outlet pipes that come under the side of the drum which are at least 1 metre underground. It eliminates the need for a deep hole in the ground for the condensate drain, which could easily fill up with rain water.

It is designed for gas pressures of 100mm WG and less. Two designs (figure 6.11) have both been used in large numbers. The former design which requires more pipe and is more difficult to make is only used on rare occasions now.

Condensate collects in the "U" tube and is lifted out using the dipper bucket which is on the end of a long rod kept inside the dipper pipe. The process is repeated until the water container no longer fills. The design is such that it is impossible to take out too much water and let the gas escape provided the gas pressure is less than 100mm. The cover on the end of the dipper pipe is to prevent dirt getting inside and is not required as a gas seal. When starting a plant about ½ litre water needs to be poured into the dipper pipe to form the initial water seal. The 'U' pipe is made to the dimensions in figure 6.11 and the upper pipe and rod lengths are made to suit the plant being installed.

Measurement of pressure

With floating steel drum plants the gas pressure is constant and there is no need to constantly measure the pressure. It can be measured using a manometer (Figure 6.12). Alternatively the pressure can be measured by connecting a length of rubber pipe to a gas tap and inserting the end into a container of water. The minimum depth (MD) to which the pipe must be inserted to stop bubbles of gas coming out, when the gas tap is open, is the measure of gas pressure in mm Water gauge.

With cement dome and tunnel plants a manometer can be used to show the pressure and therefore the amount of gas available. The length of piping must be longer than the maximum gas pressure, which, with these plants, could go up to 1400mm WG.

As an alternative to such a large manometer D.C.S. has made a pressure indicator (figure 6.13), in which the gas pressure is balanced by air pressure in a reservoir. While not being as accurate as a manometer it gives a useful indication of how much gas is left in a dome or tunnel plant and is much smaller.

Safety valves

All D.C.S. plant designs allow gas to escape from the gas drum or digester after the gas storage space is filled. With drum plants the gas escapes from under the edge of the drum. In the dome and tunnel plants gas escapes from under the gas storage dome and out through the slurry reservoir. Because of this, no safety valves are required.

Flame arrester

The gas pressure in all D.C.S. plant designs is always positive. This means that air cannot get into the plant or pipework and make a potentially explosive mixture. For these two reasons no flame arresters are used or considered necessary. Care must be taken when starting up a plant, or after repairs, to remove all the air from the system. This is dealt with in chapter 9.

Testing and repairing leaks

Leaks in gas piping is an all too common occurance. The most likely places to find leaks are at taps which, if they are made of brass, usually will turn black if they are leaking, or at joints. At a bad leak there will be an odour from the biogas. Soapy water should be put on all taps and joints and fittings etc. and bubbles will form if there is a leak. Defective joints or parts must be repaired or replaced as necessary.

A pipework system can be tested for leaks by measuring the rate of pressure loss on a manometer (or a length of transparent plastic pipe made into a 'U' and filled with water like a manometer) which is attached to one of the gas taps. Pressure is applied to the pipe line, either by opening the main gas valve or by blowing through a rubber pipe attached to a second gas tap. The pressure source is closed (i.e. by closing the main gas valve). If the levels in the manometer do not alter then there is no leak. If they do alter there is a leak and the faster they level out the larger the leak.

The amount of leakage per day can be worked out as follows -

$$V_1 = \frac{p\ V}{P\ t} \times 1440$$

Leakage per day : V_1 (m^3)

Pressure drop during test : p (mm WG)

Final absolute pressure at end of test : P (mm WG)

(Absolute pressure = manometer reading + 10330)

Time of test : t (mins)

Internal volume all gas pipes under test : V (m^3)

Example

A pipework system uses 40 metres of ½" GI pipe (16mm bore). At the start of the test the manometer read 1150 mm WG and at the end of the test it read 1095 mm. The test was over 3 minutes. What gas leakage would there be in one day?

Volume of pipework = $\frac{\pi}{4} d^2 l$ m^3 where d = diameter of pipe in m
l = length of pipe in m

$$V = \frac{\pi}{4} d^2 l = \frac{\pi\ .016^2}{4} \times 40 = 0.00804\ m^3$$

p = 1150 - 1095 = 55 mm WG

P = 10330 + 1095 = 10425 mm WG

t = 3 minutes

$$V_1 = \frac{p\ V}{P\ t} \times 1440\ m^3$$

$$= \frac{55 \times .00804}{10425 \times 3} \times 1440 = 0.020\ m^3 / day$$

Such a small leak is hard to locate. If it is remembered that the main gas valve is usually opened for an average of about 7 hours per day it will be seen that the daily loss is very small, .006 m^3 = 6 litres. All leaks should be found and repaired.

It is a big job to dismantle pipes if one joint is leaking. Sections of pipeline can be tested during installation by fitting a rubber bung with two pipes through it into the open end of the pipeline (figure 6.14). One pipe is connected to a manometer and the other to a length of rubber pipe. Air is blown into the pipework until there is a reasonable pressure shown on the manometer. The rubber pipe is then folded over to close it and any pressure drop in the manometer noted as above.

Care must be taken that there are no leaks between the steel pipe and rubber bung. Small leaks at joints can sometimes be repaired by putting on jointing compound or thick semi-dry paint and binding it on with cloth. Allow this to harden before applying pressure, especially high pressure. If neither compound or paint is available then a temporary repair can be made in a similar way but using soap instead.

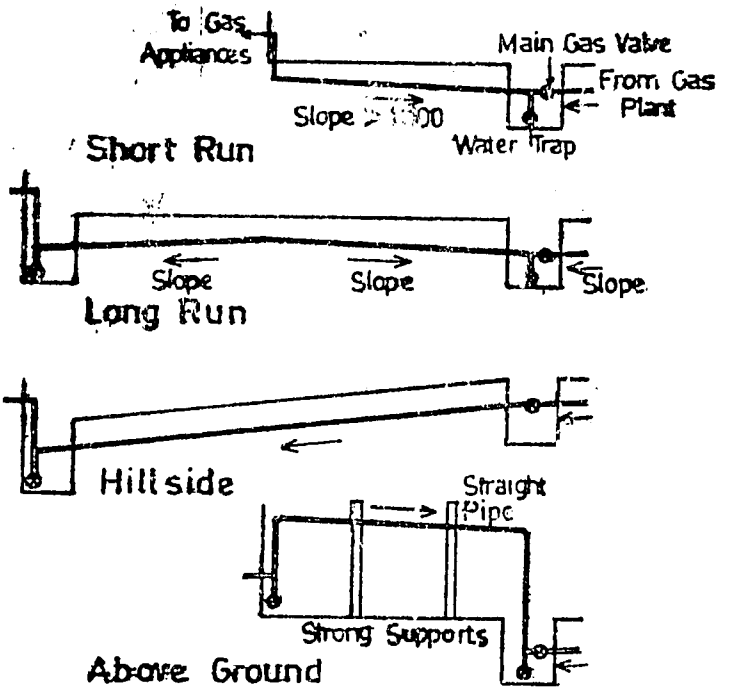

Figure 6.1 Different Pipe Installations, showing Water Traps
(Nepal Biogas Newsletter)

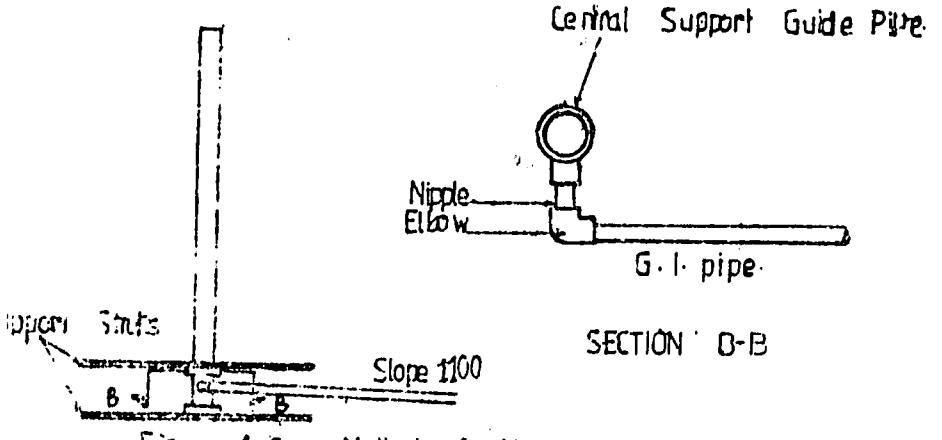

Figure 6.2 Method, of attaching gas pipe to central support
(United Nations ESCAP)

99

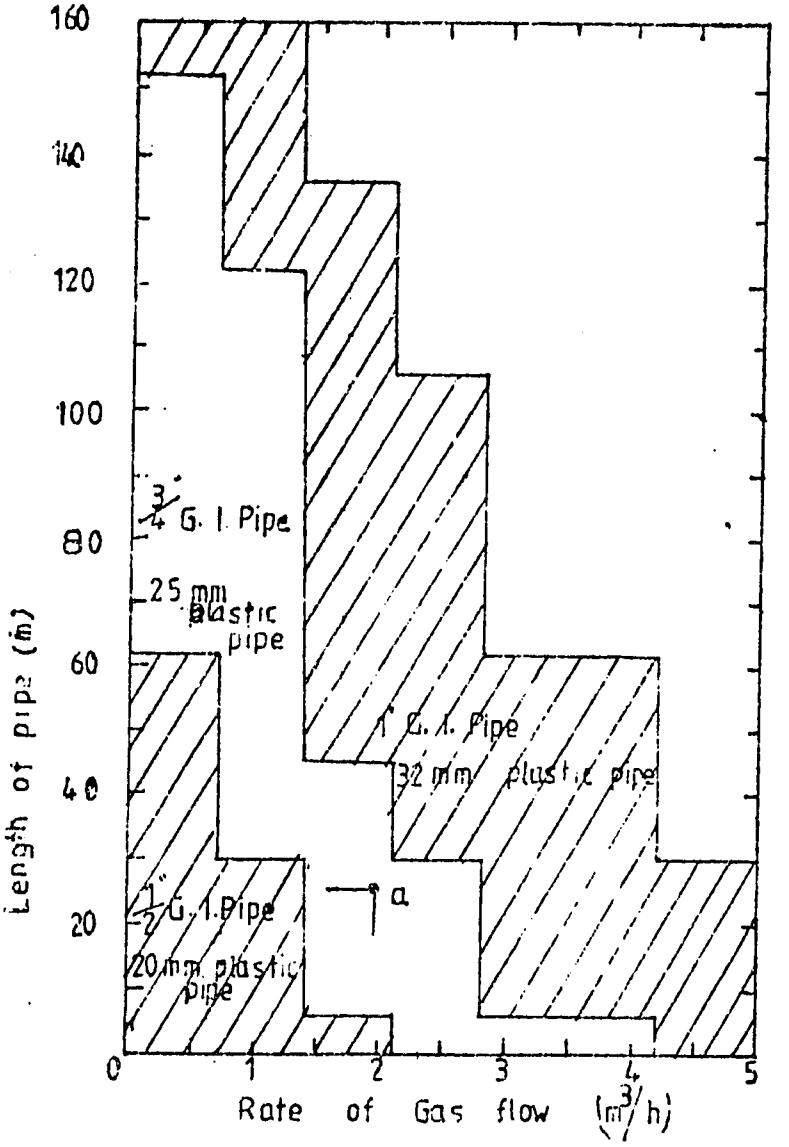

Figure 6.3 Diagram for quick determination of adequate gas pipe diameters for ordinary small installations at low gas pressures (70–100 mm WG).

Note: Diagram based on a 5 mm permissible gas pressure fall in the installation

100

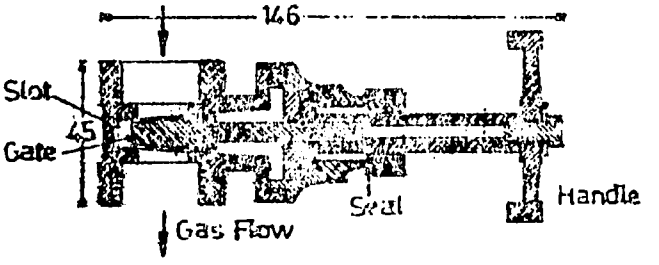

Figure 6.4 A Typical Design of Gate (Full Way) Valve.

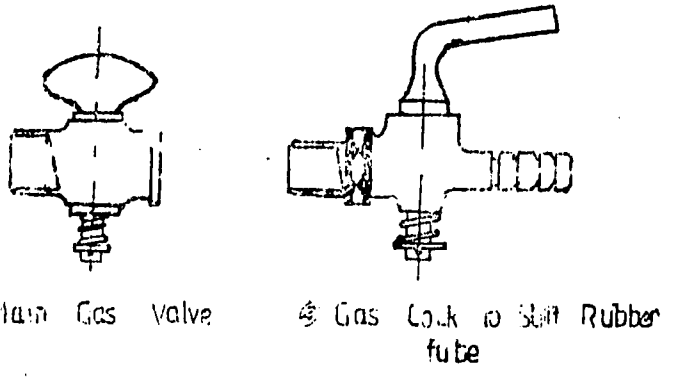

Figure 6.5 Quarter turn gas Valve

(United Nations, ESCAP)

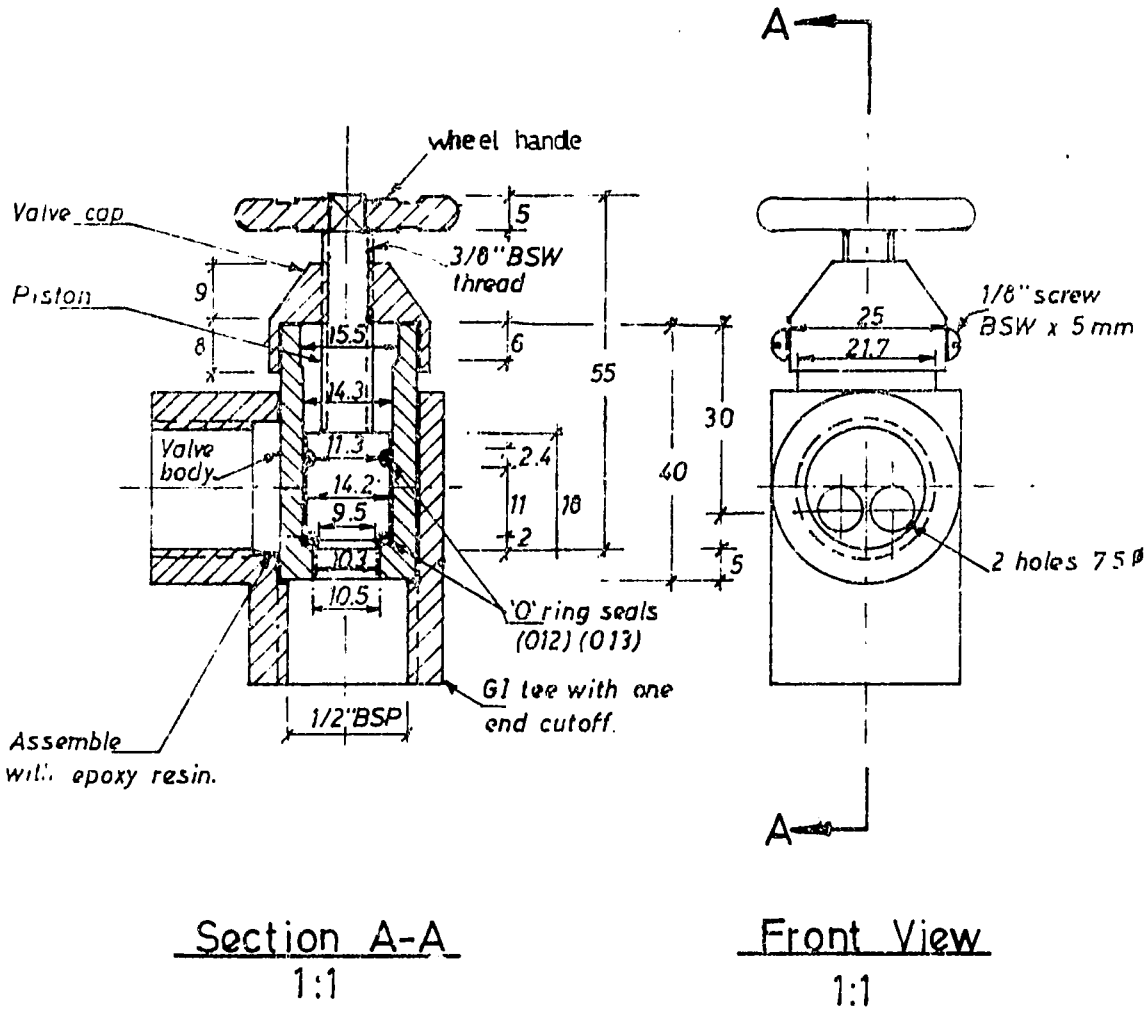

Fig. 6.6 ½ inch Main Gas Valve (Screw Action)

102

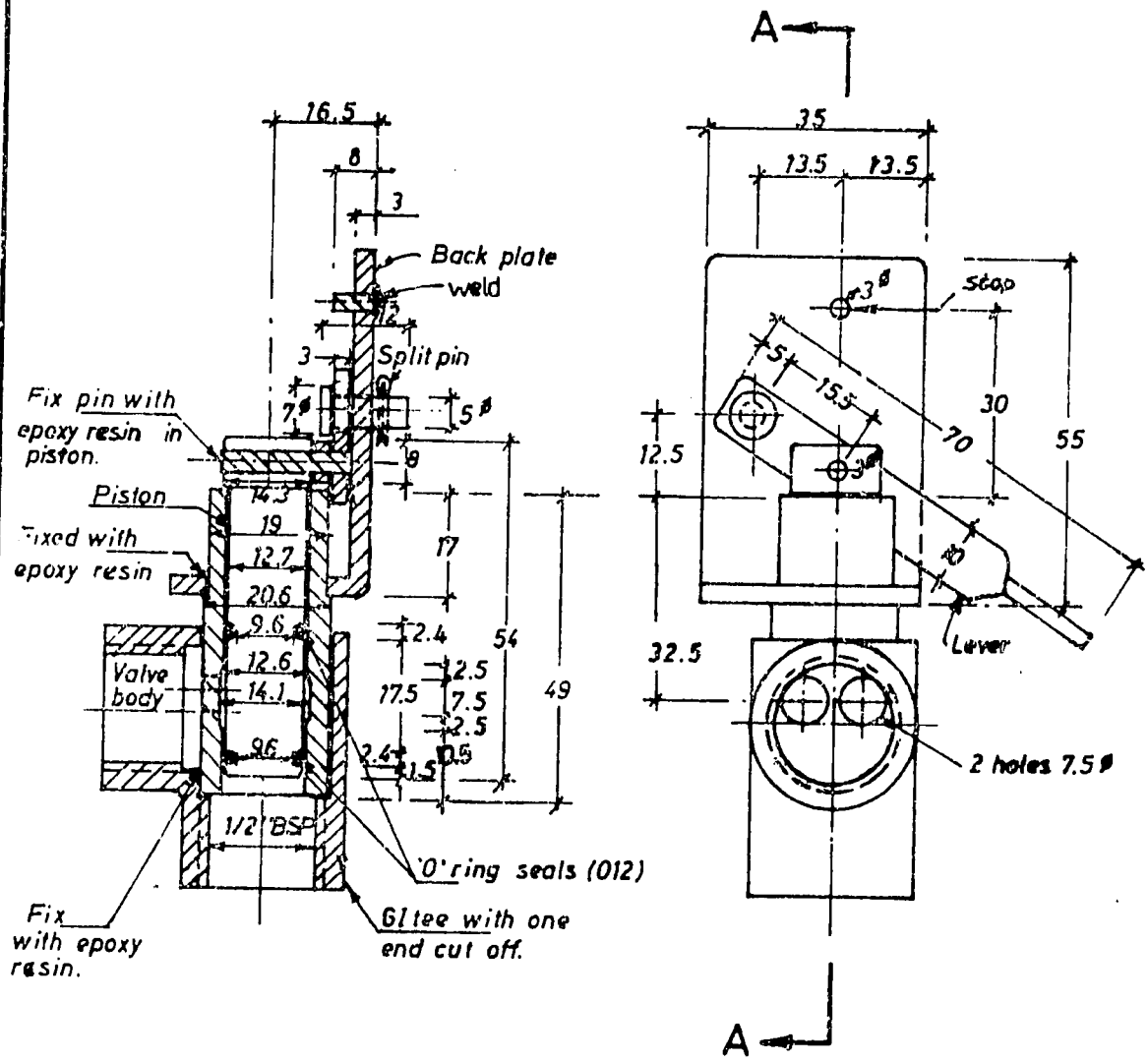

Section A-A
1:1

Front View
1:1

Fig. 6.7 ½ inch Main Gas Valve (Lever Actuated)

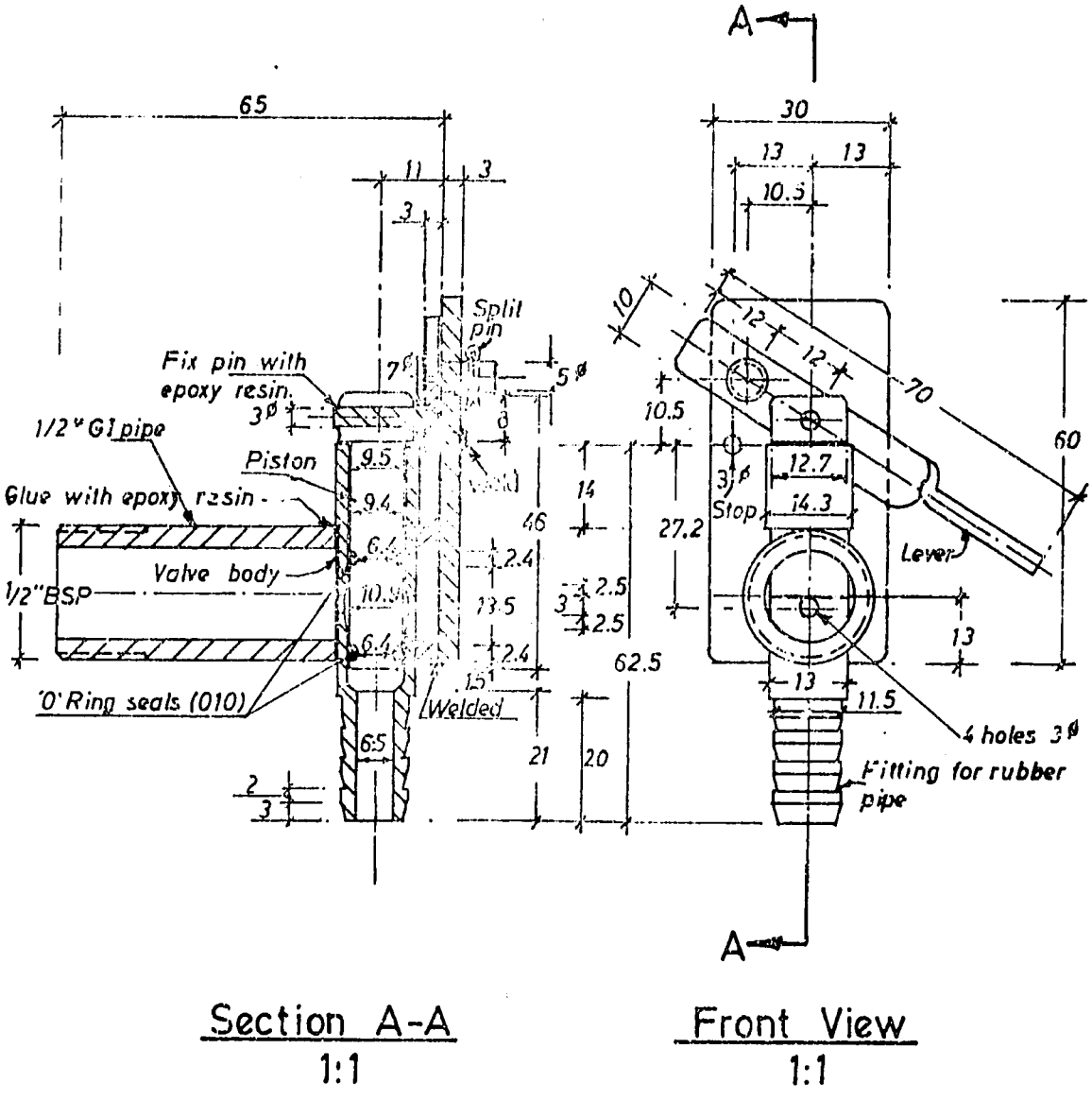

Section A-A
1:1

Front View
1:1

Fig. 6.8 ½ inch Gas Tap to Suit Rubber Pipe for Stove (Lever Action)

104

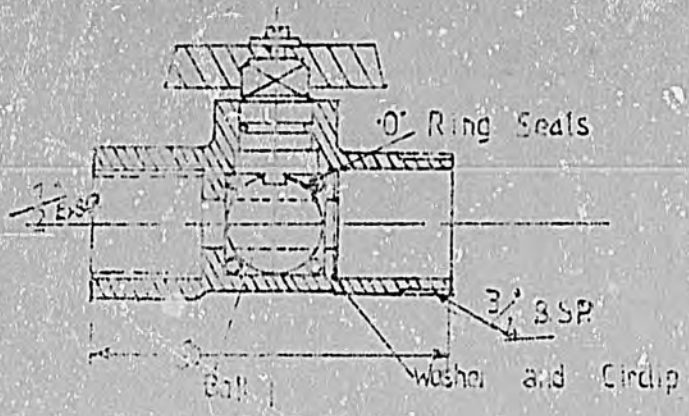

Figure 6.9 Ball Valve

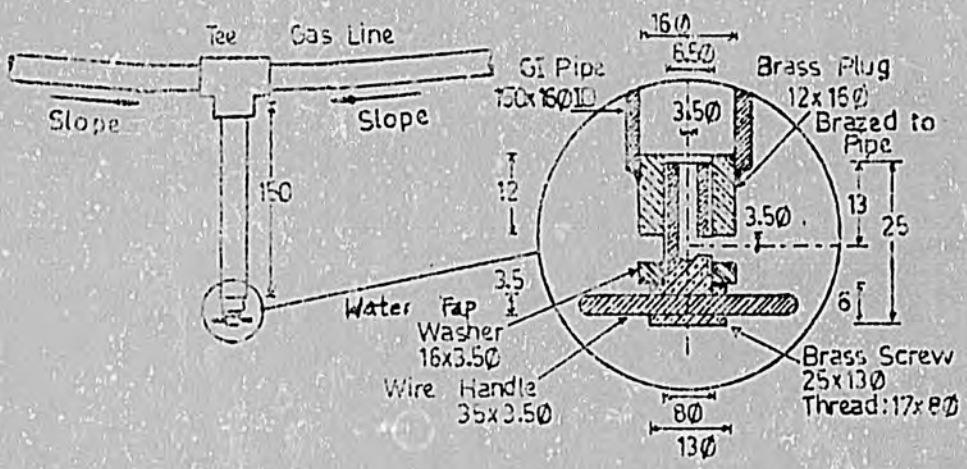

Figure 6.10 Drain Cock for Removing Water in a Gas Pipeline.

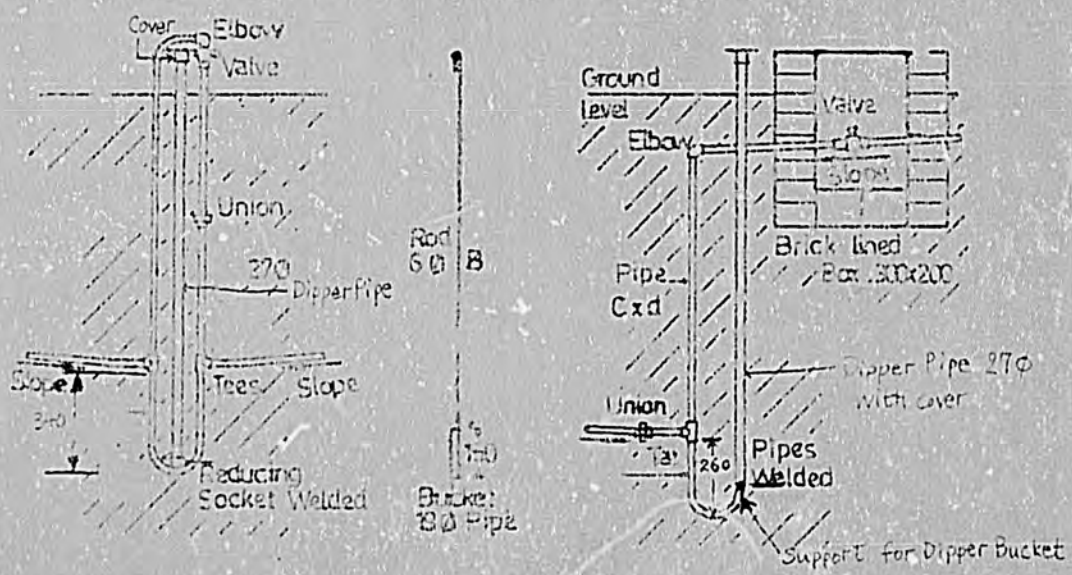

Figure 6.11 Dipper Pipe for Removing Water in a Gas Pipeline.

105

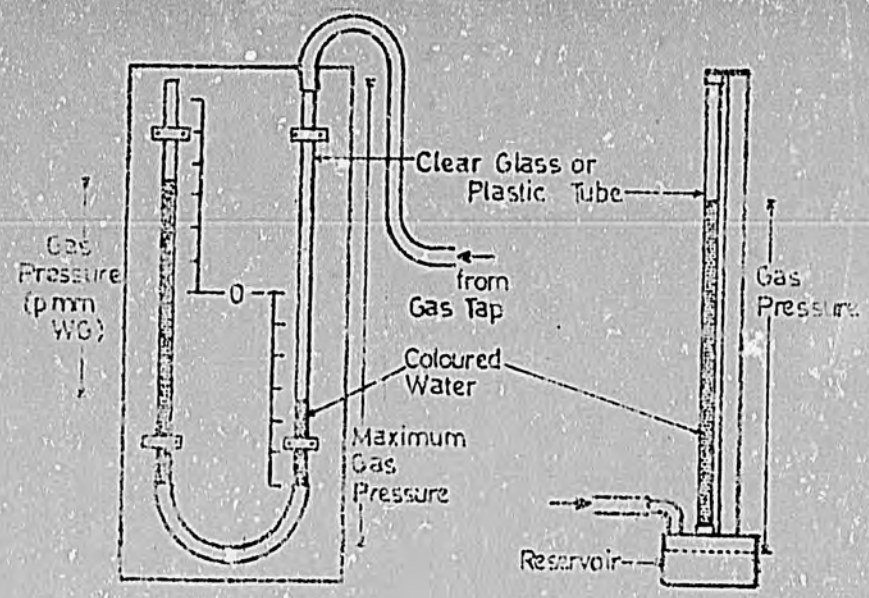

Figure 6.12 Two Designs of Water Manometer to Measure Gas Pressure

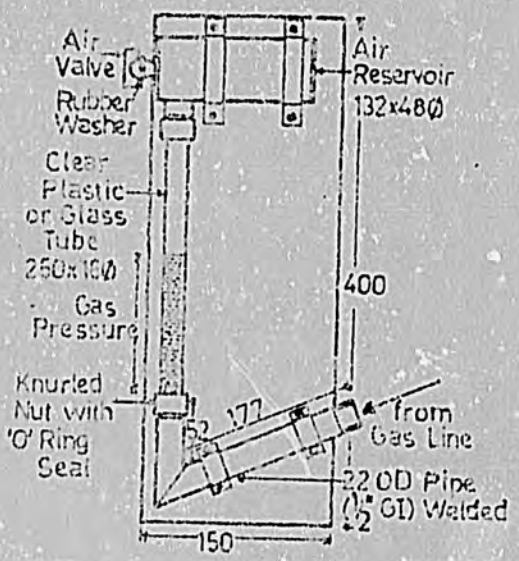

Figure 6.13 Gas Pressure Indicator Design made in DCS

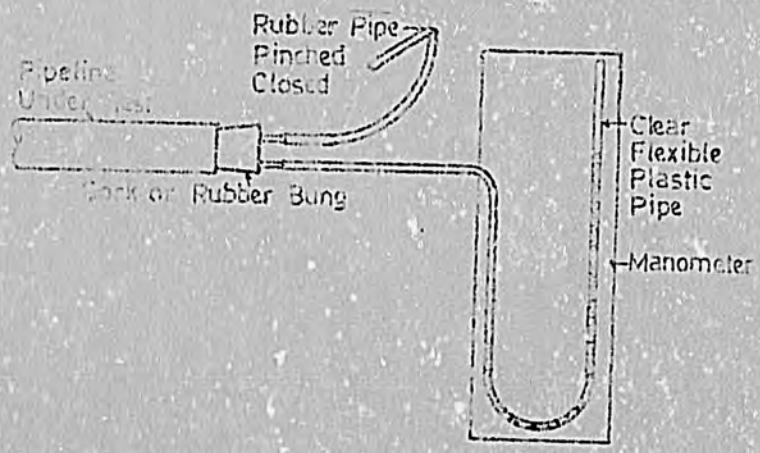

Figure 6.14 Measuring Gas Leaks During Pipeline Installation

106

Chapter 7. Household gas appliances J. Finlay

In Nepal the main use of biogas from family sized digesters is for cooking and lighting. Biogas has been used to run an absorbtion-type refrigerator and a clothes pressing iron. Originally, all appliances for cooping and lighting were purchased from Indial manufactures. D.C.S. has worked on import substitution, design improvements and cost reduction.

Cooking

Traditionally Nepali people cook over wood or dried cattle dung cake fires. Most food is boiled but some is fried.

Biogas is an excellent fuel for cooking. It is:-

Efficient	:	if properly designed stoves are used. It is worth noting that 1 kg. of wet cow dung will give bout 46 kCals of heat if dried and burnt in a fire, but about 80 kCals if turned into biogas and used in a well designed stove. (Pang.)
Fast	:	it produces immediate heat and does not need frequent attention.
Clean	:	it does not form soot on cooking vessels, clothes or kitchen.
Healthy	:	it does not produce smoke to irritate eyes or lungs.

The amount of gas needed to cook the daily food for a person depends on a number of factors. These include : type of food cooking method, number of meals and snacks per day, number of people being cooked for at a time. Another factor which is very important is the care of the cook, e.g. turning the gas down once the pot boils so that there is only a small flame to keep the pot boiling. Under Nepali culture traditions in which there are two main meals a day and snacks, the amount of gas required varies form 0.2 to 0.4m^3 per person per day.

Burners

The size of burner is usually defined as the amount of gas consumed per hour when the gas tap is fully open and the gas pressure is about 75-80mm water gauge. The most popular size is one burning approzimately 450 litres per hour. When high presure gas is used (i.e. from Displacement or Tunnel plants) it is necessary to either reduce the flow by adjusting the tap or fitting a smaller gas jet to the burner.

Biogas burner flames have a characteristic called "lift-off". If a burner is adjusted for maximum efficiency when the cooking pot is in position, then when the pot is removed the flame is liable to go out. Actually a gap of unburnt gas appears between the flame port and the flame. This gets higher until the flame goes out. To prevent this the air control can be closed and reopened when the cooking pot is replaced. If the air control is not reopened after repalcing the cooking pot the gas will burn at low efficiency.

Two burners, both of which consume 450 litres per hour, are shown in figure 7.1 and 7.2. The former is imported and the latter designed by D.C.S. As regards efficiency they are both almost identical but as regards other design features there are significant changes as the comparison below will illustrate:-

Ring burner Figure 7.1	DCS burner Figure 7.2
Robust	Robust
Efficient	Efficient
Screwed air control ring, which is slow to adjust and gets stuck in time with spilt food	Easy quarter turn air adjuster
(Designed to have cooking pot on burner and then gas lit. A parctice culturally and religiously not acceptable in Nepal)	(Designed that gas is lit then cooking pot is put on it. This is culturally and religiously acceptable in Nepal)
Dirt in flame ports falls inside is troublesome to remove	Removable burner cap for easy cleaning
Correct height flame ports to base of flat bottomed cooking pots.	ditto, with grate in position as shown in fig. 7.3
Not so stable for locally used round based cooking pots. Also height from flame ports is too low for maximum efficiency	With grate in position shown in fig. 7.2, round based cooking are stable and the height from flame ports is correct.
	Legs sparead further apart for greater stability
	Burner cap replaceable
	30% lower cost.

Burners can be supplied with a tap attached (fig.7.1) or without one but with a tap on the main gas pipe. The latter system is recommended because it allows the gas to be immediately turned off should the rubber pipe be pulled off, i.e. by moving the burner on by a child playing. Details of the DCS burner are given in Figure 7.3.

Double ring burner

There is a demand for large burners both for cooking for large numbers of people and cooking animal food. Large imported burners of the type show in fig. 7.1 and burning 1,100 litre per hour have been used.

D.C.S. has made a double ring burner (Fig 7.4) The inner burner is identical to the 450 l/h burner described above. The outer ring uses 900 l/h. The two burners have separate jets and gas pipes so they can be controlled independently. This stove is intended to give quick heating (900 + 450 l/h), efficient simmering (450 l/h or adjusted lower) and good frying (900 l/h). This is a new item which has proved to be efficient. The outer ring burner has been made of welded mild steel but in future it is probable that it will be made of two seperate castings. The top one, including pot rests and flame ports, would be removeable for cleaning. Under local conditions a casting should be lower cost.

D.C.S. burners were mainly arrived at by experiment and testing. Experience showed that to prevent flames being blown out relighting that the distance between flame ports should not be more than 10 mm and that groups need to consist of not less than 5 flame ports. Further, if the flame ports come out of a flat surface then they need to be raised up by about 6 mm from the flat surface in order to get good combustion.

Adjustment and care of burners

Biogas flames tend to "lift off" from flame ports when the burner is adjusted for efficient burning but the cooking pot is not in place. By closing the air adjuster the efficiency goes down but the flame will not "lift off" easily.

NOrmally the air adjuster is closed, the gas is turned on and lit, then the cooking pot is put into position. It will been that the flames are weak and long and lazily come up the sides of the cooking pot. There will be a slight smell from the burning gas. This indicates that the gas is burning inefficiently and more air (called "primary air") needs to be mixed with the gas. This air is provided by opening the air adjuster beside the gas jet until the flame burns with a slight roaring noise. If the gas pressure is low (steel drum type plants) then for maximum heating the gas tap is fully opened. If the gas pressure is high (dome or tunnel plant) the tap needs to be partly closed otherwise the flame will lift off or burn efficiently. The flame should not be too noisy.

Flame ports and air holes can, in time, become partly or completely blocked with spilt food. They should be cleaned out as necessary. The gas jet seldom needs cleaning but should it be necessary it must be done carefully using something like a match stick. This is to prevent the jet being damaged or enlarged. The rubber pipe that connects the gas tap to the burner can perish and crack at the ends. If this happens the ends can be cut off and a shorter pipe used.

Lighting

In Nepal there is a large demand for biogas lamps in unelectrified rural areas. Biogas lamps tend to be expensive

(especially good quality ones), use biogas inefficiently, require regular servicing and need a good supply of mantles. Electric lighting, when available, is much better in every way.

Lamps working at 50 to 100 mm WG gas pressure use about 130 to 175lt gas per hour and give about the same illumination as a 40 to 60 W electric bulb, depending on how well it is running . At higher gas pressure the mantles break more frequently.

The biogas lamps installed in Nepal have come from Indian manufacturers. The quality and price vary by a factor of 4 although of the same basic design as given in figure 7.5. The low cost ones can start giving trouble within 4 months and there are two main problems. The gas tap and gas jet adjuster are made out of brass which contains lead. The trace of hydrogen sulphide in biogas attacks the lead and soon these fittings leak. A glass globe is fitted around the light to protect it from drafts and insects flying to the light and breaking the mantle. A globe made of heat resistant glass works well but low cost globes made of strips of plain glass held in metal frame with light wire quickly fail.

D.C.S. has designed and made a new lamp (Fig. 7.6). It is low cost using where possible, steel and ceramics instead of brass. The gas tap (for principle refer fig. 6.8), and needle adjuster are both controlled by the same lever. The former by the first movement and the latter by the continued movement of the same lever. A deflector plate is used to prevent the rubber 'O' rings getting hot and has proved to be effective. The lamp works well and gives a similar light to imported lamps although it uses a little more biogas especially at higher pressures. This may be improved by adjusting the jet size.

D.C.S. has helped test a locally made lamp based on Chinese technology, fig. 7.7. This uses a fixed size glass jet in a ceramic mixing tube. The reflector is also made of ceramic. A diaphram type of valve is used to control the flow of biogas: a device made to control drip intravenious feeds in hospitals. It is a nylon wheel held in an inclined groove so that it presses on a rubber pipe and partly closes it. The air supply is varied by moving the glass jet in and out of the end of the mixing tube. This type of lamp seemed to work well in the laboratory tests with the higher biogas pressures from a dome plant (above 200 mm WG). It does not work at lower biogas pressures and may not be robust enough to offer commercially to customers. It is very cheap, especially if used valves can be obtained from hospitals after they have been discarded.

Adjustment and care of biogas lamps.

The glass globe is hinged to one side and a mantle is tied on to the clay nozzle which usually has one large hole in the centre and a series of small holes around the side. The mantle is opened to a ball shape. Having turned the gas tap on and opened the jet adjuster to maximum, the gas is lit and manlte burned. Now the globe is closed and the lamp

allowed to heat up until the burning gas makes a soft roaring noise. At this point the lamp will burn brightly and this can be optimised by adjusting the adjuster. It is usually unnecessary to operate the adjuster again until the mantle is changed. If the lamp is hot but the flame tends to burn outside the mantle and there is no soft roaring noise it can usually be overcome by blowing gently on the mantle.

To turn off the lamp, only the gas tap should be closed. However, in the D.C.S. lamp the same lever is used to operate both the gas tap and jet needle adjustment so it needs adjusting each time the lamp is used. To relight the lamp, first a match should be applied close to the mantle either through the hole in the bottom of the glass globe or by opening the globe. Then the gas turned on. If this sequence is reversed there will be a minor explosion, which may break the mantle. The lamp must heat up until it makes a noise, after which it will give a good steady light.

Before a new mantle is fitted the ventury tube should be throughly cleaned out of any insects, cobwebs, carbon or dirt. A piece of cloth wrapped around a pencil or small stick can be used. The globe and reflector should be washed with soap (or ash) and water, whenever necessary, and left to dry before the lamp is lit.

The most common reason for properly adjusted lamps not working well is cobwebs and insects' nests inside the venturi tube. A second problem, especially in lamps using low gas pressure, is a defective needle in the gas adjuster. The point should be long, thin and have a fine point. It must come down low enough to protrude through the jet and close it off. The point can be filed to shape and the hole filed to make a slot into which the pin of the regulator control fits, so that the needle can again enter the jet (figure 7.8). The D.C.S. lamp uses a different type of regulator control, but if the needle is filed correctly, it should fit into the jet orifice without any other alterations.

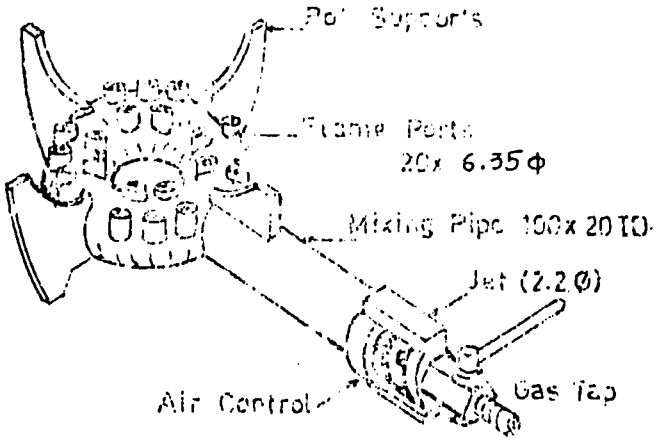

Figure 7.1 Sketch of a Typical Biogas Ring Burner.
(United Nations ESCAP)

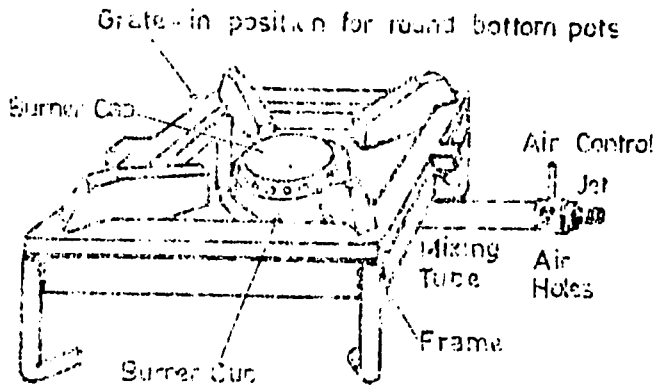

Figure 7.2 Sketch of the SUS Biogas Burner.

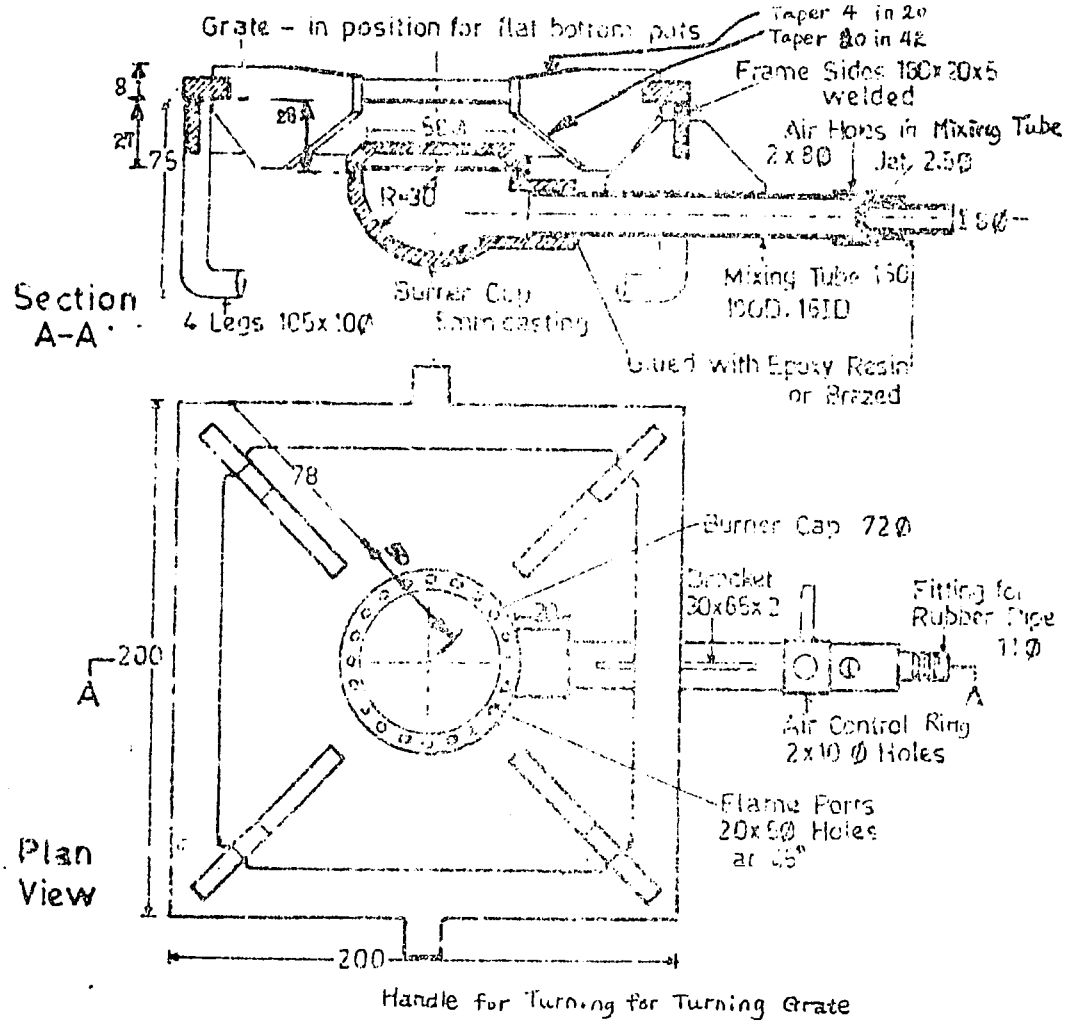

Figure 7.3 Separate Drawings of DCS Biogas Burner.

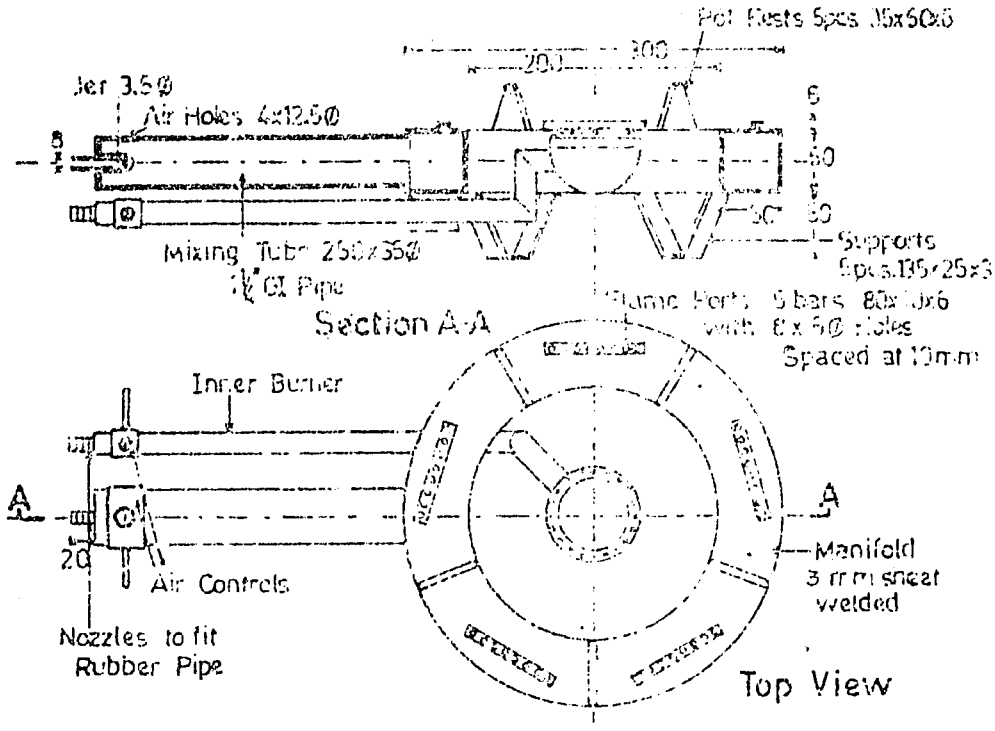

Figure 7.4 DCS Double Biogas Ring Burner.

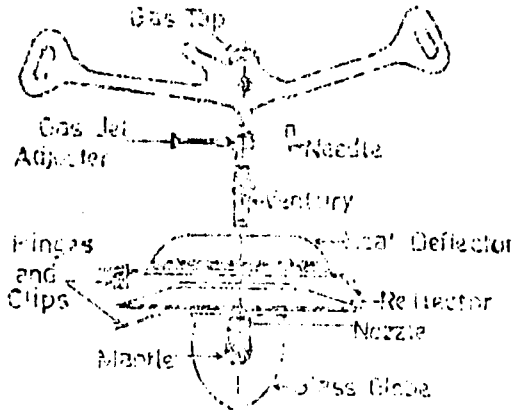

Figure 7.5 Typical Indian Biogas Lamp. (DCS Design Office)

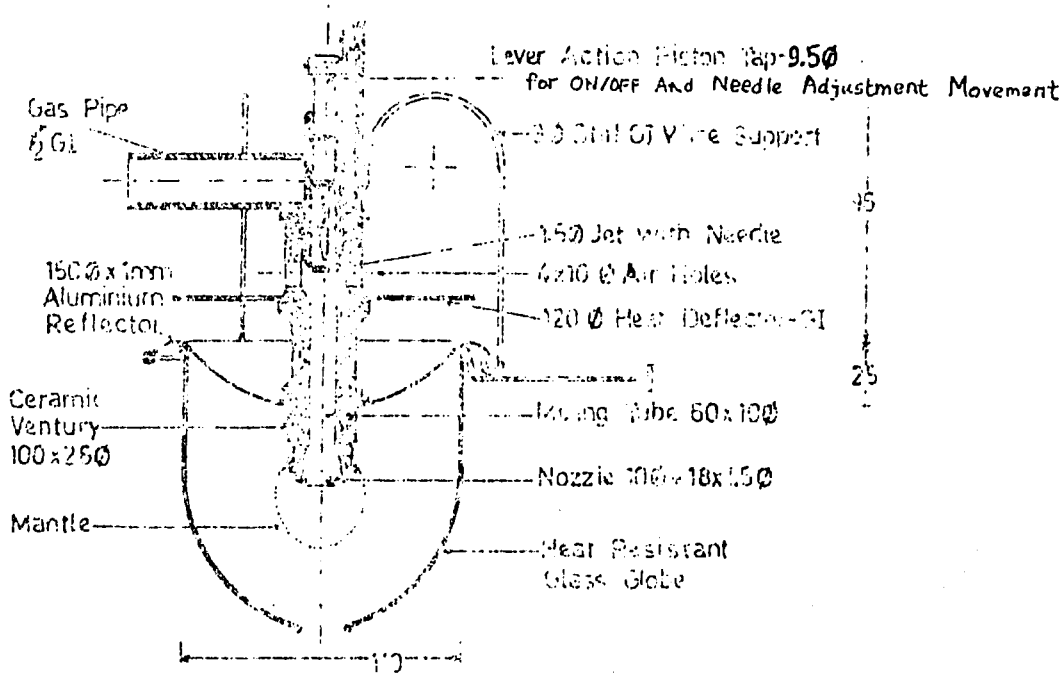

Figure 7.6 DCS Design of Biogas Lamp.

114

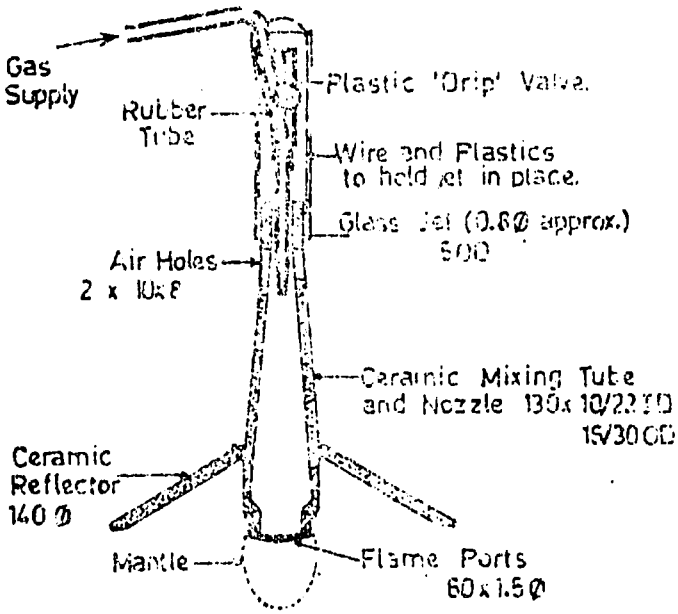

Figure 7.7 Biogas Lamp
Based on Chinese Technology.

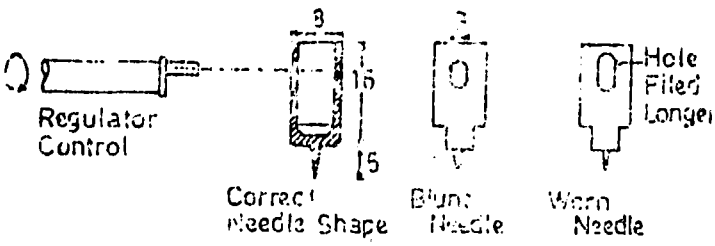

Figure 7.8 Shapes of Lamp Regulator Needles.

Chapter 8. COMMERCIAL USES OF BIOGAS

D. Fulford

Biogas is a 'high grade' fuel because it burns at a fairly high temperature (about 1,900°C in air). Biogas can therefore be used for many purposes, other than cooking and lighting, such as fuel for internal combustion engines and to run small-scale cottage industries.

The use of biogas for commercial activities introduces a new dimension to the economics of biogas. A biogas plant is a relatively large investment for a subsistence farmer (or group of farmers) and the cash saving on cooking and lighting fuel is low (see Chapter 11). Therefore a biogas plant owner must find the money to repay any loan taken to purchase the plant, from another source. If biogas can be used to fuel an income-earning activity, the cash accumulated can help to pay off the loan for the plant and biogas technology becomes economically viable for a far greater number of poorer people.

Development depends partly on energy; people who want a more advanced life-style than can be obtained from subsistence farming, must move to a place where energy is available, which is usually the larger towns and cities. Centralised power production, such as electricity from power stations or a gas supply from natural gas wells or the gasification of coal, means centralised usage of power. It is easy and relatively cheap to run electric lines and gas pipes to houses and factories that are close together, but it is very expensive to supply the same sort of energy to villages that are scattered and distant from population centres.

Biogas offers a decentralised power supply. The energy is created in the villages, where the animals are kept and the crops grown. It cannot be used in the city, where there are few cattle and little crop residues. Biogas can be used to supply energy for cottage industries in the villages themselves and to catalyse development away from the towns and cities. Village people can begin to consider a more advanced life-style and the earning of extra cash incomes in the place where they are already living. Biogas offers the rural areas increased self-sufficiency and reduced dependence upon energy supplies from the towns.

In Nepal, the main semi-commercial uses for biogas have involved the running of dual-fuel engines to drive grain mills and irrigation pumps. There is a growing interest in this approach, even though a dual-fuel engine still requires some diesel and engine oil. The running costs for the engine are reduced and fuel does not need to be transported out to the village as often as when the engine is run on diesel alone.

Running Engines on Biogas

There are basically two types of internal combustion engine: the 'Otto' engine and the 'Diesel' engine. The Otto cycle uses a spark to ignite the fuel, and the Diesel cycle uses spontaneous ignition of the fuel, at the high temperature and pressure produced by the compression of air (Picken). Biogas can only be used in a 4-stroke engine, as 2-stroke engines rely on oil mixed with liquid fuel for lubrication. The 4 movements of the piston in the 4-stroke cycle are shown in Figure 8.1)

The Otto engine is normally designed to run on petrol (gasoline), although some are designed to use kerosene (paraffin), natural gas or alcohol. The fuel is mixed with air and drawn into the cylinder in the induction stroke. The compression ratio is usually between 7:1 and 9:1 (giving an air temperature of 400°C), so that the fuel/air mixture does not spontaneously ignite (causing knocking). Ignition is by an electric spark that fires the mixture at an appropriate point near the end of the compression stroke. Biogas can be used directly in an Otto engine, as it does not knock (Octane Number: 128 - Maramba), but is

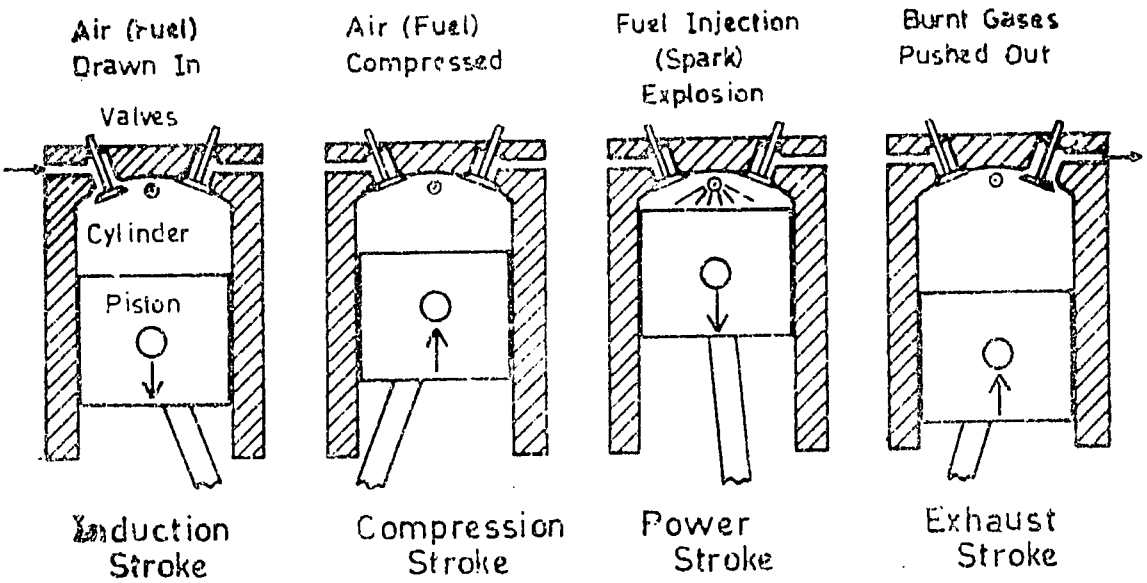

Figure 8.1 4 Stroke Cycle of a Diesel (Otto) Engine

easily ignited by a spark. Biogas is used fairly inefficiently in such an engine (20 to 25% at a compression ratio of 8:1 - Mosey) and the power output is only 60% of that when the engine is run on petrol (Maramba). Hydrogen sulphide is burnt to sulphur dioxide in the engine and it tends to corrode the exhaust valves and pipes.

In the Diesel engine, only air is compressed and the diesel is injected at high pressure into the cylinder near the end of the compression stroke, when it spontaneously ignites. To reach the high temperatures required (550°C), high compression ratios are used (14:1 to 22:1). As biogas has a high spontaneous ignition temperature (700°C - Mosey), it can be mixed with the air and compressed in the cylinder with little risk of pre-ignition. If a diesel engine is used in this way, when it is called a dual-fuel engine, the efficiency is about 30 to 35% and the power rating about 80% of diesel only operation. There seems to be a lower risk of corrosion in the exhaust system when biogas is used in a diesel engine. For these reasons, the use of biogas in dual-fuel engines is most common.

The speed of a diesel engine is altered by varying the amount of fuel injected into the cylinder. On stationary engines, the speed is usually kept constant by a governor, which uses centrifugal fly-weights to control the fuel injector valve. When biogas is introduced into the air supply, the engine speeds up, so the governor automatically reduces the diesel supply until the engine again runs at the designed speed. In this way, the biogas to diesel ratio is kept at about 5:1.

A third approach is to adapt a diesel engine to biogas operation with spark ignition (Fry). With the high compression ratio, this type of engine is more efficient than an Otto engine. Such an approach requires good engineering knowledge and experience and access to tools and parts, such as suitable generators, distributors and spark plugs (usually second-hand), so it is really not suitable for an extension programme for biogas in a developing country, such as Nepal.

Use of Biogas in Dual-Fuel Engines

Several dual-fuel engines are working in Nepal on biogas and they were mainly purchased in India, where they are available commercially. They

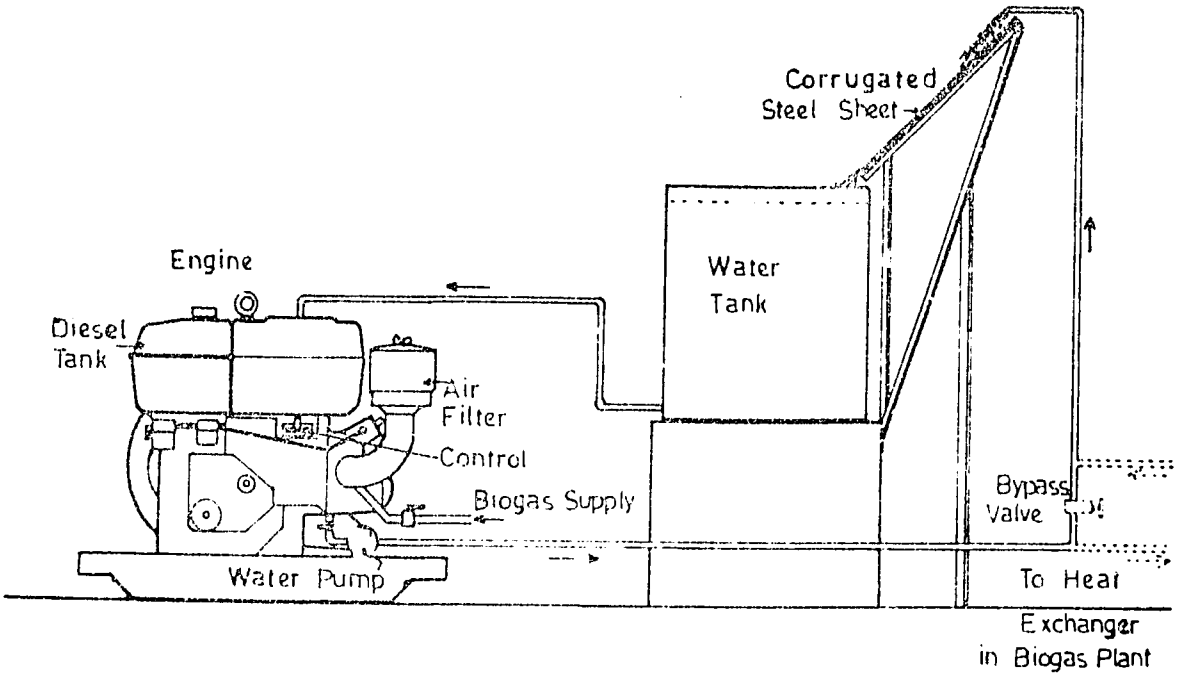

Figure 8.2 Cooling System for Dual-Fuel Engine

use a very simple gas carburettor and seem to be fairly robust and reliable. A 5 Horse Power (HP) engine (3 kW) uses about 2.1 cu.m (75 cu.ft) of biogas and 0.2 litres of diesel in an hour, as opposed to 1.2 litres of fuel, when on diesel alone (Kirloskar).

The biogas pressure should be about 75 mm WG and the biogas supply is controlled by a valve in the line (usually a ball valve). This type of engine is usually used as a static engine to drive machines such as grain mills and water pumps. The engine should be started on diesel alone and the biogas valve opened slowly until the engine starts to run unevenly. The valve can be closed slightly until the engines runs smoothly again, and this is the correct position.

A dual-fuel engine runs at a higher temperature when used with biogas, so the cooling system must be effective. The "hopper" type of cooling system, in which water is added to an open hopper in the top of the engine, is not adequate. Even with a thermosyphon system, in which water circulates by convective flow into a water tank placed above and to the side of the engine, a dual-fuel engine can overheat, if the air temperature is already high. If the engine is being used with an irrigation pump, cooling water can be bled from the outlet of the pump and circulated through the engine. This system works well, as long as the water is fairly clean and dirt does not block the water passages. The outcoming water should be just too hot to touch. If the engine is being used to drive other machinery, a small water pump, driven by a pulley and belt on the fly-wheel, should be used to circulate water. The hot water can be cooled in a radiator, or by running it down a length of corrugated steel sheet into a water tank (Figure 8.2).

The cooling water from the engine can also be pumped around a heat exchanger in the slurry in the digester pit (see Chapter 10). A bypass valve should be included, and a water cooler, so that both the engine and the digester can be set at the correct temperatures.

Full details for running and maintaining a diesel engine are given in

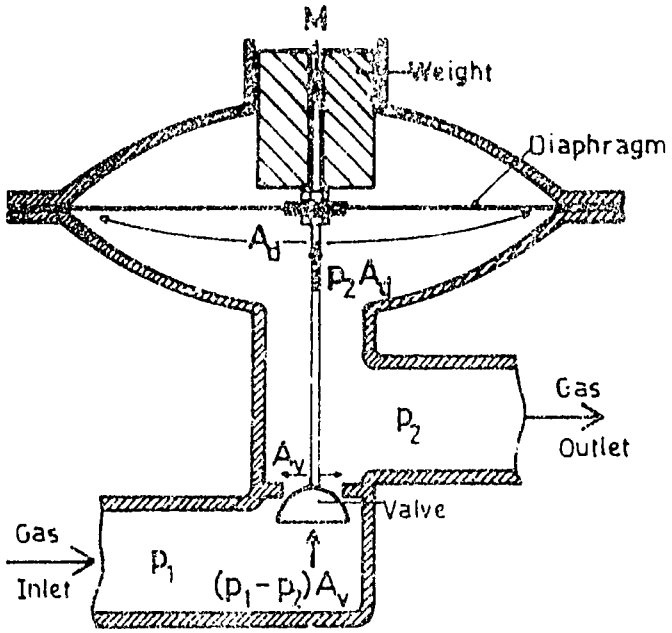

Figure 8.3 Principle of Operation of a Pressure Regulator

the manufacturer's manual, which should be carefully studied and followed. Great care should be taken that the engine oil is kept topped up and replaced at the correct intervals. Inadequate or dirty engine oil can cause an engine to overheat or even fail. Another common cause of failure in engines used in rural areas is bolts shaking loose. Regular checks should be made that all bolts are tight.

If the use of biogas in engines is part of a biogas extension programme then the training of villagers to operate engines and to do simple maintenance must be part of the programme.

Use of High Pressure Biogas in Dual-Fuel Engines

The optimum pressure for biogas to be used in a dual-fuel engine is 75 mm WG. The biogas pressure from a dome or a tunnel plant is between 200 mm and 1,400 mm WG. Attempts have been made in DCS to design a pressure regulator, so that the pressure can be automatically controlled at around 75 mm WG, but they do not work effectively. The operation of such a regulator is given in Figure 8.3. The pressure of the outlet gas (p_2) is balanced by a weight (or spring) (M), acting over the area of the rubber diaphragm (A_d). When the pressure is too high ($p_2 > M/A_d$), the valve is closed. As gas is used, the valve opens ($p_2 < M/A_d$). In more accurate pressure regulators, the effect of the inlet pressure (p_1) acting over the valve area (A_v) is cancelled out with a a second diaphragm (area A_v), placed so that the inlet pressure (p_1) acts in the opposite direction.

Commercial regulators are available and can be purchased in India and elsewhere. Even they do not always work reliably on the relatively low flows and pressure differentials used in biogas technology. Problems also exist with corrosion of the regulator parts with biogas.

Engines are being run using biogas from dome plants without the use of such complex equipment. The excess pressure can be dropped across a suitably sized orifice, which can be a partially closed valve. The

pressure drop (Δp) is of the order of:

$$\Delta p \approx \rho \frac{u_o^2}{2g} \quad \text{or:}$$

$$\Delta p = 15.57 \frac{Q'^2}{A_o^2} \quad \text{mm WG}$$

ρ is the density of biogas, g is the acceleration due to gravity, Q' is the instantaneous biogas flow rate (litres/min)

Q' = 4 x Q, the average flow rate, as the biogas is drawn into the cylinder for only 1/4 of the 4-stroke cycle.

A_o is the orifice area (mm^2).

If the gas valve is adjusted as suggested above, ie. until the engine just runs smoothly, then the pressure drop across it should be correct. The valve will need to be adjusted every 15 minutes or so, as the pressure from the dome or tunnel plant will drop as the biogas is used. A graph of the pressure drop across the ball valve shown in Figure 6.11 against the angle of closing (θ) is shown in Figure 8.4 for different gas flows.

The above expression gives a value for the pressure drop in any pipe fitting, when multiplied by a suitable factor: K, ie.:

$$\Delta p = K.\ 15.57\ .\ \frac{Q^2}{A_p^2} \quad \text{mm WG,}$$

where A_p is the internal area of the fitting (mm^2) = $\pi\, d_p^2/4$.

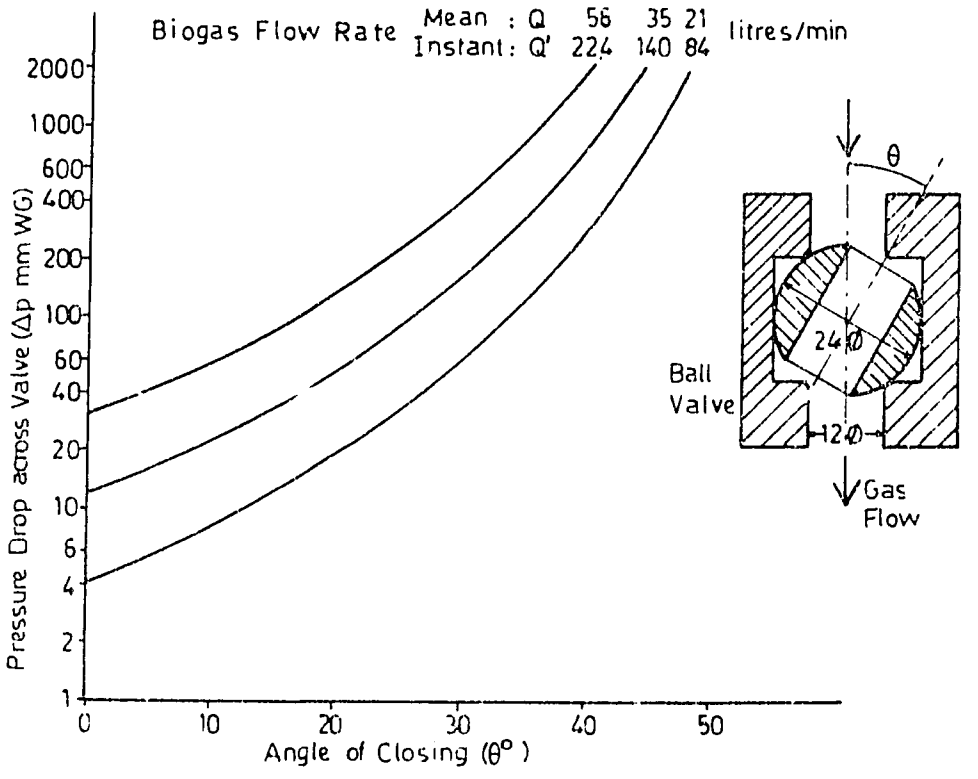

Figure 8.4 Pressure Drop across a Ball Valve, Partly Closed.

Fitting	Pressure Loss Coefficient (K)	
	Re > 2,000	Re < 2,000
Elbow (90°)	0.75	0.9
Tee (Branch Line)	1.0	1.5
Tee (Straight Line)	0.4	0.5
Socket	0.04	0.05
Reducing Socket	0.5	-
Sudden Expansion	$(1 - d_1/d_2)^2$	-
Meter	10	-

Table 8.1 Values for Pressure Loss Coefficient (K) for Fittings (Pritchard, Perry).

Values for K for different fittings are given in Table 8.1. They depend on the Reynold's Number (Re, see Chapter 6). The values of K for different fittings should be added together to give a value of: K for the whole pipeline. The values of pressure loss for the ball valve (Figure 8.4, above) were calculated assuming the valve is a sudden reduction in diameter (K = 0.5) followed by an expansion ($K = (1 - A_o/A_p)^2$ - Borda-Carnot formula - Perry).

Carburettors for Mixing Biogas and Air

If a diesel engine is to be adapted to a dual-fuel engine, the main alteration is the addition of a carburettor to mix the biogas and air in the correct proportions. For a static engine that runs at a fixed

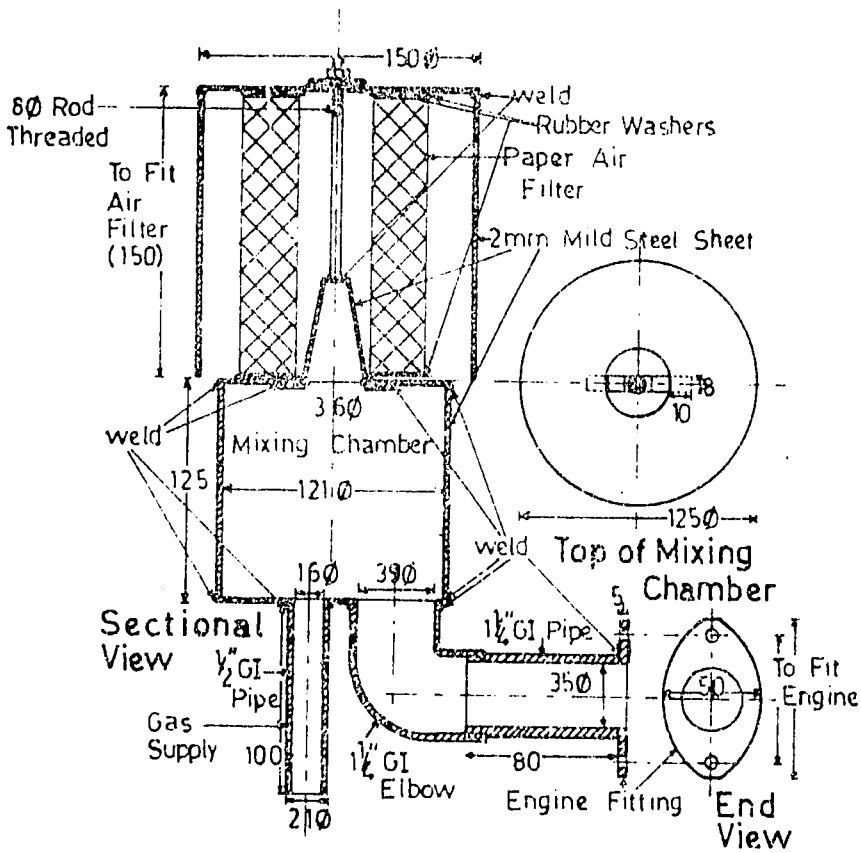

Figure 8.5 Mixing Chamber Type of Carburettor.

speed, the gas/air mixture is roughly constant (1:5 approx.), so a simple design of carburettor can be used. For mobile engines, or static ones that must be run at varying speeds, the gas/air mixture must be adjusted to suit the engine speed, so the carburettor must be more complicated (Hollingdale).

Two types of carburettor have been used in Nepal: one is a simple mixing chamber device, the other uses a ventury. The mixing chamber design (Figure 8.5) uses the pressure drop across a paper air filter to create enough suction to draw biogas through the gas valve during the intake stroke of the engine. The areas of the gas inlet pipe (16 Ø), the air inlet orifice (36 Ø) and the mixture pipe (39 Ø) help to control the gas/air mixture. The gas supply is regulated by the gas valve.

The mixing chamber has been used with several types of Indian made diesel engines (3 to 7 HP; 2.2 to 5.2 kW) and it seems to work well. Further improvements may be made: for example, the engine perforance could be improved by making the air orifice adjustable (Lichtmann). This type of carburettor did not work with a Japanese made engine that has a higher compression ratio (23:1 instead of 17:1) and ran at slightly higher revolutions (2,000 rpm instead of 1,500 rpm at 5 HP, 3.7 kW) than the Indian models. This engine could not be used with a paper air filter, and the pressure drop across the oil-soaked wire mesh filter was too low.

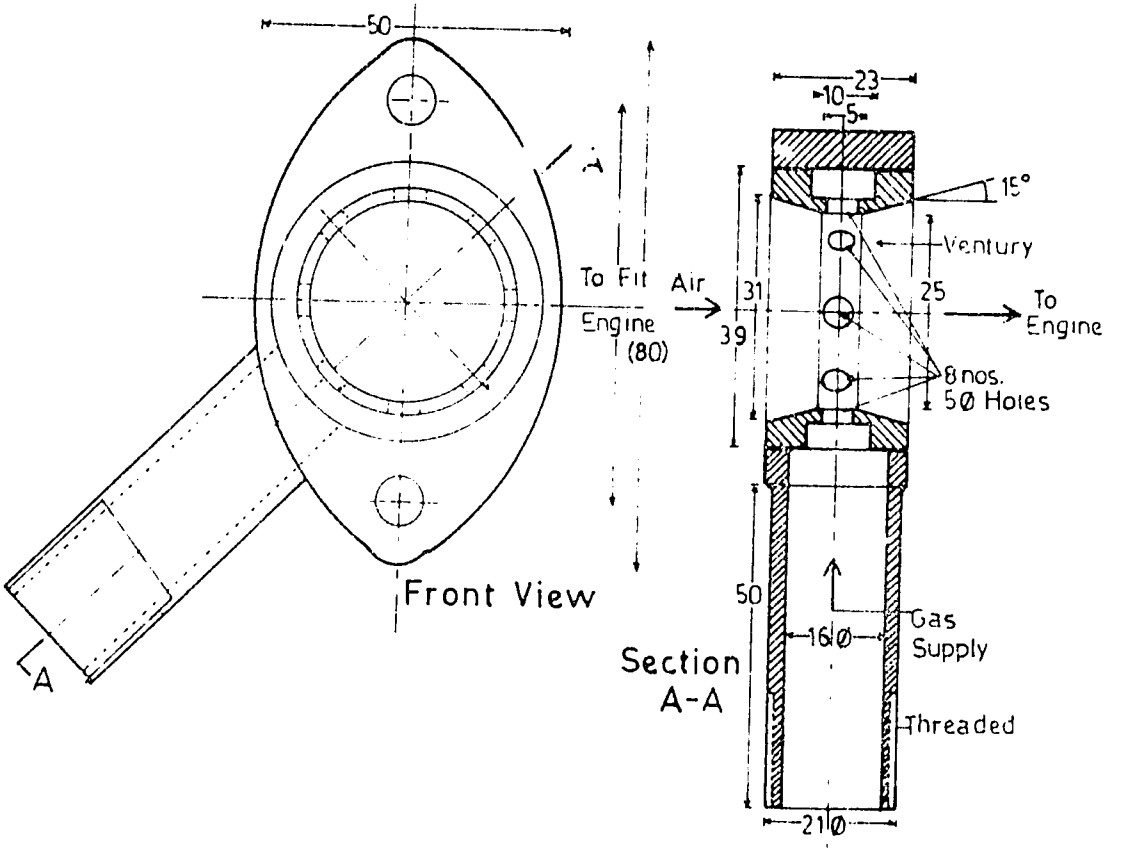

Figure 8.6 Ventury Type of Carburettor.

A ventury type of carburettor was designed for use with this engine (Figure 8.6). It fits between the air intake pipe and the air manifold in the cylinder head. As the incoming air is drawn through the ventury, the change in pipe cross-section causes a reduction in pressure, which draws in biogas through the holes. The use of several holes in the ventury should allow for good mixing. Tests with the 5 HP Japanese engine give biogas to diesel ratios of 4:1 (ie. a 75% saving on diesel). Further tests and adjustments may improve these figures.

There are many other designs of carburettor used by different groups involved in biogas technology (ESCAP, Picken) and further research may offer better designs.

Use of Biogas for Milling

Most mill engines in Nepal are slow running diesel or kerosene engines, although electric motors are taking over, where electricity is available. Biogas dual-fuel engines tend to be faster running and smaller and are used with smaller sizes of milling equipment.

The two machines used mainly in a mill in Nepal are a rice huller, that removes the hard hulls from the grains of rice, and a flour mill that grinds grains of wheat, maize and millet to flour. An oil expelling machine, that presses cooking oil from mustard, sesame and other oil seeds, is also often used. Each of these machines are avaiable in different sizes from commercial sources in India. A typical small machine uses 7 or 8 HP, so only one such machine can be used at a time with a 7 or 8 HP dual-fuel engine.

Such an engine could be used for 3 to 4 hours a day with an SD500 biogas plant (depending on ambient temperature and whether slurry heating is employed). It could be run with diesel alone, but the running costs would be higher. The dung from 30 cattle would be required to feed such a plant. A larger biogas plant could also be used (an EP80 would run the system for 6 hours a day, an EP95, for 8 hours), but the capital cost and number of cattle required would be proportionally greater (45 and 60 cattle respectively).

The outputs from the 7 HP machines are: 150 kg of paddy per hour for the rice huller; 90 kg of flour per hour from the flour mill; and 30 kg of oil seed from the oil expellor. One such system has been installed near Butwal and has been running for over 2½ years. It uses a 7 HP dual-fuel engine, a rice huller, a flour mill and an SD500 biogas plant, without digester heating. Running water from an artesian well is used to cool the engine. The 4 joint owners are very happy with the system and are making enough profit to pay back the loans taken to pay for all the equipment (less a 50% subsidy for the biogas plant). 5 or 6 similar systems have also been installed in Nepal and more are being ordered. Most are working well, although a few have some problems with cooling the engine.

When such a system is installed, the engine and milling equipment must be properly installed. They must be bolted to strong foundations that will not be damaged by the vibration of the machinery. Planks of wood between the engine and a concrete base help to absorb vibrations. A diesel engine should be started with no load on it, so the machines must be linked to the engine while it is running. Traditional mills use a flat-belt drive, with a split drive pulley. The belt can free-wheel on one half of the pulley, and is pushed onto the driven half to start the machine. Flat belts are inefficient and can be dangerous if they jump off a fast spinning pulley.

DCS uses 'V' belt drives, which are more efficient at transmitting power and do not jump off the pulleys. The engine and the machines are mounted so that the belt is loose and the belt can be tightened

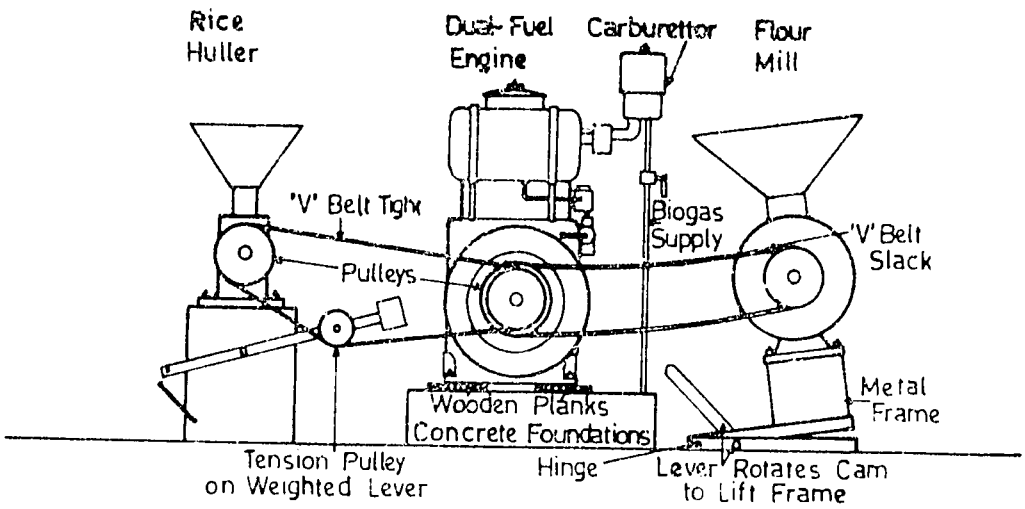

Figure 8.7 Two Methods of Tensioning 'V' Belts

with a third pulley on a weighted lever (Figure 8.7). An alternative approach is to mount the machines on a metal frame hinged to the floor. The whole machine can be lifted by a lever to loosen the belt, while the whole weight of the machine is used to keep the belt tight (Figure 8.7).

The details of the operation and maintenance of milling equipment is given in the manufacturer's manuals and these should be carefully read before any machine is installed. Training courses must be given to all villagers who are to operate these machines.

Use of Biogas for Water Pumping

If water is to be lifted from one level to another, higher one, a pump can be used. Mechanical pumps can be driven by a dual-fuel engine, using biogas as a fuel, but the pump and the engine must be matched together and to the situation in which they are used. Usually a matched "pump-set", including both the engine and the pump, is supplied.

A supply of water is required that will meet the demand, whether it be for irrigation or drinking water. In a monsoon climate, as in Nepal, many water sources dry up in the dry season, so would not be useful to irrigate a crop, for example, in this season. The water source may be a river or irrigation canal, a shallow dug well or a deeper tube well. The water must also be taken to where it is required, by an irrigation canal to the fields, an artificial canal (flume), by a pipe to a storage tank or to overhead or underground sprinkler systems.

If water is taken from a river or canal, a suitable site must be made for the pump. The bank may need to be reinforced with concrete or by gabions (wire cages filled with rocks), to prevent erosion. If no river or canal is avaiable, a well may need to be dug. Advice should be sought from local people and water supply experts as to where underground water is likely to be, and to how deep the local water table is. Other nearby wells can be studied. Local well diggers can be approached to dig the well. If local expertise is not available, then a suitable book must be consulted (Minto, Stern). If the water table is more than 10 to 20 metres deep, a tube well can be drilled. This requires special expertise and machinery, but there are many water drilling projects in Nepal and other developing countries, that can be approached for help.

Once a suitable source of water is found, the "pumping head" can be

measured, which is the difference in height between the surface of the source water and the point to which the water is pumped. If water is pumped from dug wells or tube wells, there may be "draw-down", ie. if the water is pumped out of the well faster than it enters, the water level will drop until the two are equal. The pumping head is in two parts: the "suction head", between the supply water level and the pump, and the "delivery head", between the pump and the outlet. The total head is the sum of the two. The suction head may be negative, ie. the pump may be below the surface of the supply water, so the height difference must be subtracted from the delivery head. The suction head cannot be more than about 7 metres as "suction" relies on atmospheric pressure (10.33 metres of water) to drive the water up the pipe.

The relationship between pumping head (H, metres), water flow rate (Q, litres/sec) and power requirement (P, kW or HP) is given by:

$$P = \frac{H\,Q\,\rho\,g}{\eta\;1{,}000}\ \text{kW} \qquad \text{or} \qquad P = \frac{H\,Q\,\rho\,g}{\eta\;746}\ \text{HP} \quad \text{(Morris).}$$

ρ is the density of water (1,000 kg/lit),
g is the acceleration due to gravity (= 9.81 m/sec^2),
η is the efficiency of the pump.

There are several types of pump that can be driven by a dual-fuel engine. The most common is a centrifugal pump, which has a vaned impeller that rotates rapidly. The water enters the centre of the impeller and is thrown outwards by centrifugal force, which gives it pressure and drives it through the outlet. Centrifugal pumps are usually driven directly by the engine flywheel, through a flexible coupling. They are designed for a particular head and flow rate, and if used close to the design point, can be up to 90% efficient. If a centrifugal pump is used in a situation for which it is not designed, the efficiency can be as low as 30% or less. The manufacturer's catalogues must be consulted for these details. A typical set of design curves for a particular centrifugal pump (Kirloskar) are given in Figure 8.8).

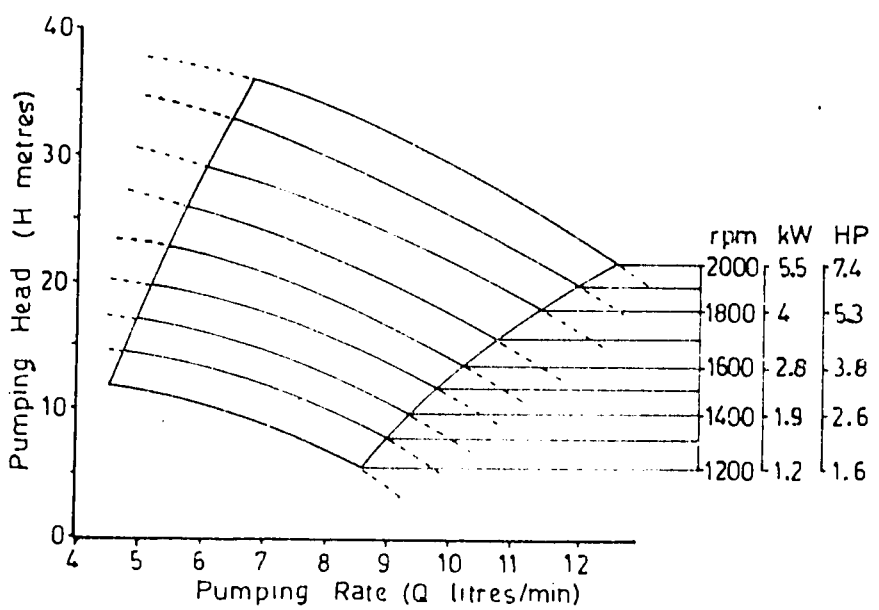

Figure 8.8 A Set of Design Curves for a Typical Centrifugal Pump (Kirloskar).

Tube well pumps are either axial flow impellers (like a propeller in a pipe) or positive displacement pumps (a piston in a cylinder). The drive from the engine has to be transmitted to the pump, which is down the pipe immersed in the water, so the overall efficiency of the system is reduced. An average efficiency can be taken as 60% (Stern), but the actual value for any pump in a given situation must be obtained from the manufacturer's literature.

Other types of water pump, that can be run on biogas but do not use a separate internal combustion engine, are being developed. They include the Humphrey pump (Dunn), which is an internal combustion gas engine that uses a water column as a piston, steam pumps (Pickett) and also steam engines driving conventional pumps.

The size of a dual-fuel engine and its daily use is usually limited by the amount of biogas available. A 5 HP engine can be used with an SD500 biogas plant for about 6 hours a day, if the ambient temperature is high (giving a total of 23 kW.hrs a day). Given the pumping head and an estimate of the pump efficiency, the above formula will give the amount of water available each day (W cu.m/day):

$W = Q \times 3.6 \times n$, where n is number hours/day that the pump is used.

The availability of water determines the area of land that can be irrigated (I, hectares). The amount of water required by a hectare (10,000 sq.m) of land (w, mm depth per month) is affected by the porosity of the soil (how fast the water drains away), the humidity (how fast the water evaporates), the crop (rice demands more water than maize), the farming techniques (a mulch can reduce evaporation) and many other factors (Isrealson). If a value for water requirement (w) can be found, then the irrigated area of land (I) can be calculated:

$I = \frac{W \times 30}{w \times 10} = 3\frac{W}{w}$ ha, assuming 30 days in a month.

For the Terai of Nepal, an average value for w is 160 mm/mth, but local agricultural experts should be consulted to obtain the relevant figure for a particular location and crop.

One biogas irrigation system has been operating in Nepal, in Parwanipur near Birgunj, for over 4 years and has proved very successful. It pumps water from a small all-year canal to an irrigation flume that takes it to the fields; up a head of 3.5 m (Figure 8.9). The biogas plant is an SD500 and is supplied with dung from a herd of 30 buffalo. The effluent from the plant is mixed with the irrigation water in the flume. The pump should supply about 700 cu.m of water per day, to a land area of 34 ha. This is insufficient (34 ha needs at least 1,500 cu.m a day), so the biogas system is supplemented by an electric pump. The owner prefers to use the biogas system as far as possible, as it is much cheaper to run and the supply of biogas is much more reliable than the local supply of electricity.

In this case, the cattle sheds, biogas plant, pump, canal and irrigation flume have been arranged to be close together. In other places, one or more components of the system may be some distance from the rest. Cattle dung may need to be carried some distance; gas may need to be piped along a long pipe (see Chapter 6); a canal may need to be made to carry the water. The layout and siting of each component of the system must be carefully planned before it is built.

Use of Biogas for Electricity Generation

Biogas engines can be used to drive generators for electricity, and several systems have been set up in Nepal. If a dual-fuel engine is being used for another purpose, a small (0.5 to 1 kW) generator can

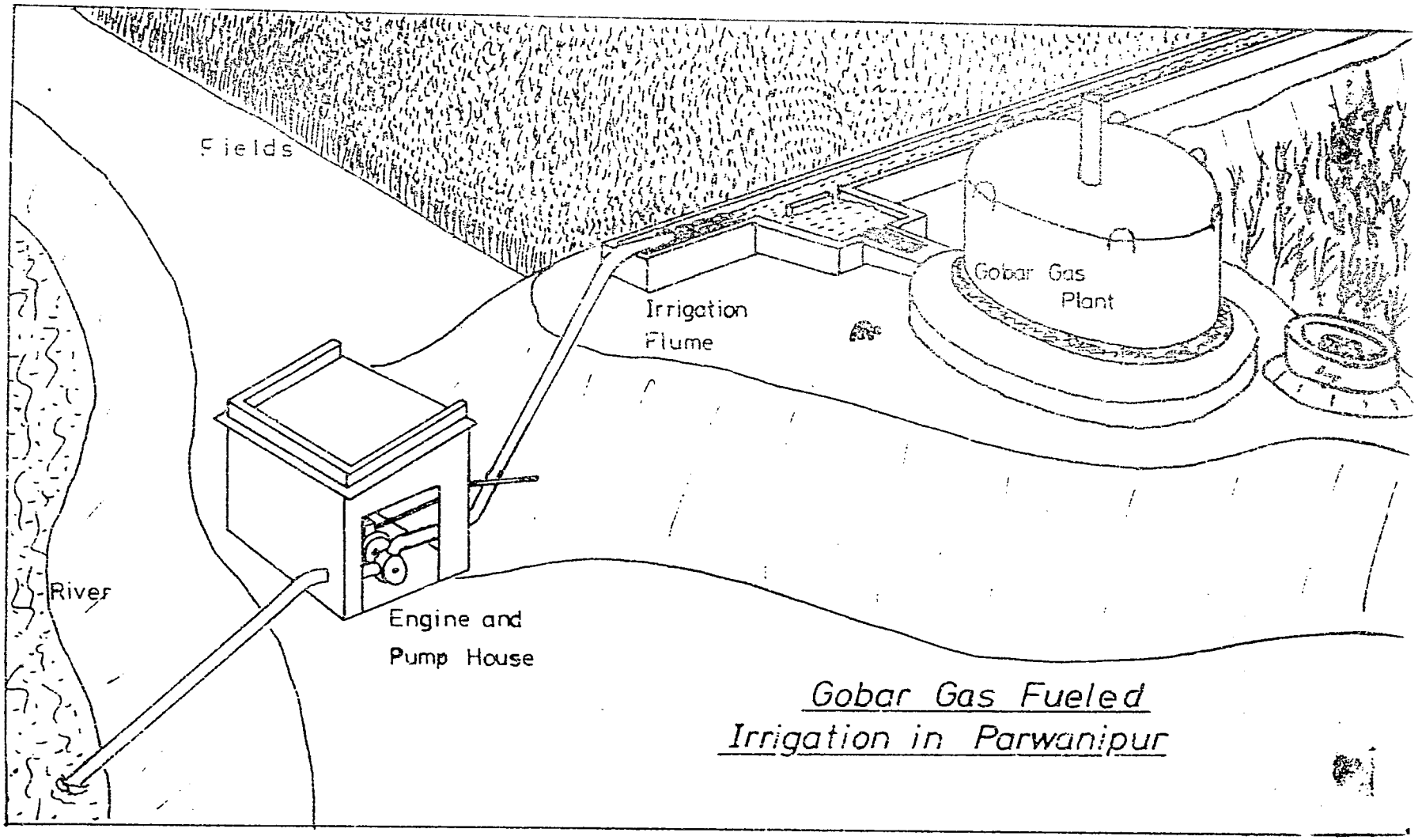

Figure 8.9 Biogas Irrigation Scheme

be run at the same time, to provide lighting. Electric light is far more efficient than gas light: 700 litres of biogas could generate 1 kW.hr of electricity to run 16 60 W light bulbs; the same gas could only run 5 biogas lights for an hour.

Apart from lighting, it is usually more efficient to use energy directly, rather than generating electricity and using that. Biogas can be burnt to give heat, or used in a dual-fuel engine to give mechanical power.

Biogas Used in Cottage Industries

As biogas gives good heat with suitable stoves, it can be used in cottage industries that require heat. Several such industries have been considered for Nepal: making cheese from milk, making soap from vegetable oils and custic soda, extracting medicinal oils (eg menthol), by boiling, making jam and other preserves for bottling and roasting coffee beans are a few. Only one such system has been built: a cheese plant in Pauwa (Meier) by the Swiss Association for Technical Assistance to Nepal (SATA).

The amount of heat required for a process must be calculted, when deciding whether it can be run on biogas. Taking the cheese plant as an example: each 100 litres of milk requires 5,500 kCal to steralise it (heating from 20°C to 75°C) and a further 2,200 kCal to warm the culture of milk and rennet (at 42°C). Boiling water is also required to clean the equipment (say 50 litres, needing 4,000 kCal). Taking an overall efficiency of 50%, about 25,000 kCal are required each day, or about 5 cu.m of biogas. It works out that the amount of dung produced by a herd of cattle is enough to process the amount of milk produced by the same cattle to cheese using biogas as a fuel.

Unfortunately, the Pauwa cheese plant has not been very successful, so the technology has not been adopted elsewhere. In Nepal, the Dairy Development Corporation builds cheese plants of a size to process 1,000 litres of milk a day. If such a plant were run on biogas, the dung of 150 cattle would be required. While farmers are prepared to

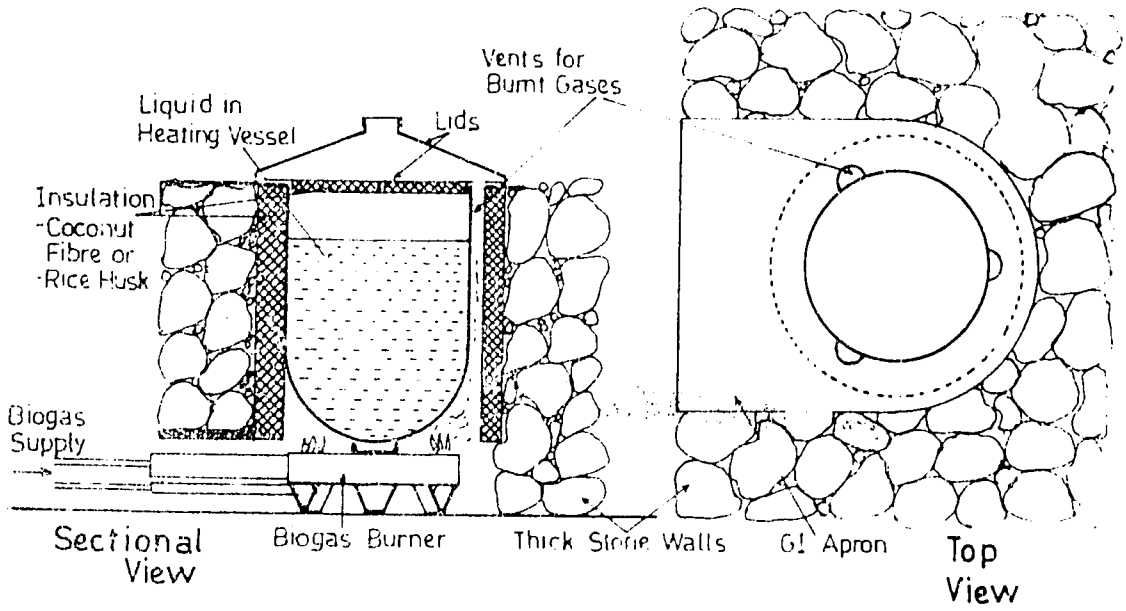

Figure 8.10 Suggested Design for a Heat Saving Boiler

carry a few litres of milk to a central plant each day (often half-an-hours' walk each way), they will not carry dung. The Pauwa plant was designed to run on dung from a central piggery, from animals fed on the whey from the cheese plant. Ill-health among the pigs has been a recurring problem, resulting in poor biogas production. Pauwa is sited at 1,800 metres above sea-level, so solar heaters were used to keep the biogas plants at a suitable temperature and to preheat water before it was heated in a boiler by biogas. This approach proved very expensive.

If biogas is to be used in this type of cottage industry, the scale of the process must be reduced, to suit the supply of biogas. Several small-scale units (eg. cheese plants processing 100 or 200 litres of milk a day), each sited near the cattle sheds of one village, are to be prefered to one central unit, as dung is difficult to transport. A central office can offer quality control, marketing and maintenance facilities. This approach, of using a Service Centre to help village-based industries or workshops, has been successful in other contexts (Garg).

If biogas production is likely to be inadequate for an industrial process, consideration should be given to the use of higher efficiency heating systems. An open gas burner loses much of its heat (40 to 50%) to the open air. This heat could be trapped and used, if the whole unit (burner and vessel being heated) was placed in an insulated enclosure (Fulford). Suitable vents (of at least 150 sq.mm area per litre/min of biogas used) should be provided for the burnt gases, but they should be arranged so that the gases give up most of their heat before they escape (Figure 8.10).

Chapter 9. Starting, Operating, Servicing and Safety

J. Finlay

This chapter starts from the point where the gas plant has been built, all pipe work completed and the appliances fitted. First the digester needs to be filled with feedstock mixed with water to make a slurry.

In Nepal most biogas plants (99%) use cattle dung from cows, bullocks, oxen and water buffalo exclusively as the feedstock. Other animal dung and vegetable matter finely chopped up could also be used, (refer chapter 1 and 10) but because DCS's experience is mainly with cattle dung this chapter will only refer to it as the feedstock material.

Slurry consistency

Slurry is made by mixing the dung with water to make it fluid. Most people use a dung to water mixture of 1:1 and it works well. However, DCS research, as recorded in vol II chapter 3 shows that a mixture ratio of 2:1 can be used with no significant reduction in gas production. This has a significant benefit in that for the same daily gas production the digester volume can be reduced by 25% and 50% less water is required, a big advantage in water short areas.

Cattle dung, when excreted has about 18 to 20% dry matter content, the remaining being moisture. This figure can be altered quite quickly due to sun drying or rain absorbtion. DCS used to use a hydrometer for measuring the moisture content of slurry. When the slurry was thin (1:1 ratio) it was difficult to get an accurate reading due to the viscosity of the slurry. With thicker slurries (2:1 ratio) it was more or less impossible to get a reading. The only reliable way to measure the dry matter content (called Total Solids: TS) is to take a sample of the slurry, weigh it, dry it in an oven at 100° C for 24 hours and weigh the residue.

$$\text{Total solids} = \frac{\text{weight of dried sample}}{\text{weight of original sample}} \times 100\%$$

Under village conditions of making the slurry it has been found that a 1:1 ratio gives a TS concentration of 7% to 9% (hydrometer reading 1.045 to 1.190). A 2:1 ratio gives a TS concentration of 12% to 13% .

DCS research (Vol. II chap. 3) has shown that TS between 6 and 14.5% has negligible effect on gas production in steel drum, concrete dome or tunnel plants. Too thin a slurry, i.e. less than 6% in unsatisfactory because the slurry will seperate out into three layers inside the digester - leaving solids at the bottom, water in the middle and floating vegetable matter on the top. If too thick a slurry is used, i.e. over 14.5%, it will not flow easily and the gas bubbles cannot pass through the slurry easily. In both cases the gas production is noticeably reduced.

130

Slurry Mixing

Mixing of the slurry for small plants is locally often done by hand, but it can also be done by feet or by a slurry mixing tool (Figure 5.2). For large plants a mixing machine (Figure 5.3)is commonly used. Whatever method is used it is essential to mix the dung water thoroughly until there are no lumps. If there are lumps then gas production will be reduced because the gas producing bacteria do not have free access to the food in the lumps.

When mixing the slurry care should be taken to avoid the following things being included and getting into the digester.

- Earth or sand, etc. (picked up with the dung). It will fill up the bottom of the digester in time and reduce the effective digester volume.
- Straw or grass etc. Any that is in the sluury while it is being mixed can be removed by using one's fingers or a sieve. If it is not removed it will float to the surface of the digester, especially if the T.S. is less than 10%. Thick scum in a digester causes reduced gas production and where a gas drum is used, it restricts the drum's free movement,
- Sawdust or peat moss etc. These are impossible to remove once mixed with the slurry and can cause very serious clogging and scum problems.
- Oil,soap, detergent. Water mixed with these things should not be used for making the slurry as they can kill the bacteria and stop gas production.

Starter bacteria

The bacteria which make methane gas, exists in all cattle dung. Therefore no special starter is needed. In cold weather the bacteria may take several weeks to multiply enough to produce gas but the process can be speeded up by adding some urine (max 3%) or pig dung (max. 10%) and it with the slurry.

Filling the digester

Digesters should be filled quickly to avoid unnecessary air getting at the slurry as the methane bacteria die in the presence of air. Dung can be collected for sometime prior to filling the plant. It must not be allowed to dry and become hard during this time because once dried it is impossible to mix into a slurry.

Slurry is mixed, as described above, in the inlet pit and allowed to flow into the digester. While filling a digester with a centre dividing wall, care must be taken to fill both compartments equally, otherwise the centre dividing wall

will collapse of uneven pressure. Therefore drums are not fitted until the plants are filled in order to be able to see the slurry levels in both compartments.

In cement dome and tunnel plants the main gas valve and a tap are left open to let the air escape until the plant is filled with slurry. For safety reasons it is recommended that the gas tap opened is one at a condensate trap.

Slurry is fed into the digester until it reaches:

	Steel Drum plants	-	outlet level
7	Concrete dome plants	-	half way up the slurry reservior
	Tunnel plants	-	level of bottom of the main floor of the slurry reservoir.

If there is any water lying in the bottom of the digester before it is filled with slurry, this will not matter. The slurry should be made as thick as possible while still of a flowing consistency (it must be free of all lumps). This will mix with the water in the digester and once it is of the correct consistency the remaining slurry can be made to the normal consistancy.

When the digester is full of slurry there will be no leaks of water into the digester because the pressure of the slurry in the digester is greater than the pressure of water trying to get in. The slurry will not leak out through any small cracks in good brickwork because the fibres in the cattle dung will block them up.

Starting the plant

Where a water removal device with dipper pipe is used about ¼ litre of water should be poured down the dipper pipe to form the gas seal. The special dipper for the new gas outlet for the tunnel plant requires about one litre.

While a steel drum plant digester is being filled the drum should be given a final coat of paint and damaged paintwork should be especially well covered to prevent rust starting. After filling the digester the steel drum is placed in position over the central guide. The main gas valve and burner taps are opened to allow the air to escape and the drum to settle down onto the deflecting ledge. Then all taps and valves are closed.

Similarly once cement dome and tunnel plants are filled all the gas taps and valves are closed. Patience isneeded for for the gas storage volume to fill with gas !

Depending on temperature, it can take 5 to 20 days.

When a steel drum is full of gas then surplus gas will bubble out from under the edge of the drum. With cement dome and

tunnel plants the gas is allowed to form until the slurry comes out of the outlet or gas starts to escape by bubbling out from the gas storage space through the reservoir.

The first gas produced usually has a high percentage of carbon dioxide CO_2 in it and often it will not burn. It can also have air mixed in with if the procedure given above is not followed properly and so there could be a danger of an explosion. Therefore it is recommended that all the first gas is allowed to escape in the same manner as described above for letting the air escape. There should be no naked flame and no smoking while the gas is escaping. The second lot of gas will, in almost every case, burn well. Occasionally there is still too much CO_2 and only the third lot of gas will burn.

Note: Once a biogas plant is full, no further slurry should be added until the gas storage volume has been filled three times with burnable gas, or after 15 days, whichever is longer. Good burnable biogas indicates that the bacteria populations have stablized. This procedure is essential. Failure to follow it is a common cause of low or no gas production or gas which does not burn (too much CO_2) when starting a plant.

All pipework needs to be flushed with gas by opening the taps in turn until there is a definite smell of gas and then closing them again. Burners and lamps are operated and adjusted as given in chapter. 7.

Operating the plant

The main task is to feed in the correct amoung of fresh slurry daily and, w n necessary, to remove condensate from the gas pipes using the condensate taps and water outlet devices. How to make the slurry is given above and suggested daily feed for the three types of plant is given in the respective chapters 2,3 and 4. Sometimes the suggested figures cannot be used or need to be altered, e.g. when there is a shortage of dung. In these cases gas production can be calculated using the formulae given in chapter 5.

The daily mixing of the correct amount of dung with correct amount of water to obtain the correct slurry consistance is important. The volume of slurry can be easily measured in the inlet pit.

$$\text{Volume} = \frac{\text{Length (cm) x breadth (cm) x depth of slurry (cm)}}{1000}$$

ThenThe answer gives the volume in litres.

Methane bacteria do not like changes. If it is found that over a period of time, too much too little, too thick of too thin a slurry has been used, then it should be corrected. If it is a big change it should be corrected in stages over a period of time. A major alteration in the feed made at one time can have an adverse effect of the bacteria and instead of an increase in gas production there can be a temporary reduction.

With tunnel plants using 2:1 dung water ratio it is recommended that each day the new slurry is seeded with bacteria by using one bucket of old slurry taken from the outlet of the plant. This speeds up the methane production precess.

Care must be taken when considering putting in extra slurry in a plant. If the retention time is less than about 40 days and the temperature is low then there is a strong possibility that all gas production will stop. The equations thatcan be used for working out the effect of additional slurry are given in chapter 5.

Having taught a person how to make the slurry correctly it also is important to explain not to spoil the good work by washing out the inlet tank with an extra bucket of water and letting this run down the pipe into the digester:

It is generally considered beneficial to mix the slurry in the digester to release gas bubbles and break up any scum in the digester. In the steel drum plant this is easily done when thegas drum is low in the slurry (i.e. after using the gas) by rotating it back and forth for a few minutes once or twice a day. Most dome plants have a mixer fitted and this too cab be used in a similar way after the gas has been used.

In the tunnel plant no mixer is provided but a thick slurry is normally used which means scum does not form readily. In both tunnel and dome plants there is some authomatic mixing as the slurry moves in and out of the slurry reservoir as gas is alternatively stored and used. Occasionally in Nepal some pig dung is available and added to the cattle dung slurry, Using this mixture gives more gas then cattle dung alone. The same is true of night soil and urine are added via an attached latrine. This is due to there being more nitrogen in these materials.

One other operation that needs to be done from time to time is the removal of dried slurry. During dry weather in particular, this tends to collect around the outlet of all types of plant and block it up. It needs to be removed as necessary. Built up dried slurry should also be removed from the sides of the mixing pit and with the floating steel drum plant from between the digester wall and drum.

Operational problems and remedies

Starting Problems

Problem	Possible cause	Remedy
Gas drum does not rise (floating steel drum plant)	Lack of time	In cold weather (20°C) it can take 3 week to start a plant. Have patience!
or Pressure does not rise (cement dome and tunnel plants).	Feeding in slurry while waiting for first gas to collect.	This is a common fault. No slurry should be fed until the third time the gas storage has been filled with burnable gas. This allows the right kind of bacteria to develop and the pH to correct itself.
	Very few bacteria.	At least 20 litres of slurry from a working plant should be put down the inlet followed by one lot of new slurry to push the bacteria fully into the digester.
	Burner, light or condensate tap open.	Close it.
	No water in dipper pipe (condensate trap)	About 1/4 litre water should be poured into the dipper pipe (1 litre for special tunnel plant gas outlet). Any excess can be removed using the dipper bucket.
	Leak in gas taps, piping or gas storage.	Locate and repair
First gas produced will not burn.	Wrong kind of gas.	The first gas should not be burned. It may have air mixed with it and could explode. Frequently the first gas has a high percentage of CO_2 and so does not burn. Usually the second lot burns. (Also refer "Feeding in slurry...." above).
	Air in the gas pipe.	Allow it to escape until there is a defimite smell of gas.
	Wrong bacteria (Foul smelling)	Add lime till pH is 7. Do not add fresh slurry until burnable gas is being produced.

General Problems

Problem	Possible cause	Remedy
Gas drum (or pressure in dome and tunnel plants) goes down quickly once main gas valve is opened.	Burner, light or condensate tap open.	Close it, or them.
	No water in dipper pipe (condensate trap).	Add water as given above
	Major leak in pipework.	Locate and repair.
Gas drum (or pressure in dome and tunnel plants) rises very slowly.	Temperature too low.	Gas production is always reduced in cold weather. Ideas to increase gas production are given in chapter 10
	Thick scum on top of slurry	Remove scum. No straw, grass, sawdust etc., should be put into gas plants.
	Daily slurry wrong. Too thick or thin or too much or little.	Correct amount and consistance should be added daily. Gas production should correct itself in a few weeks.
	Washing out mixing pit with extra water and allowing this or rain water enter the digester.	Do not let extra water enter the digester.
	Slurry mixture suddenly changed a lot.	Slurry mixture should not be altered too much at one time.
	Putting chemicals, oil, soap or detergent into slurry.	Feed daily with dung and water only. After 2 to 6 weeks it should correct itself.
	Gas leak.	Locate and repair.
Gas will not burn.	Wrong kind of gas (probably too much CO_2) due to putting in too much slurry or too much urine per day.	Let gas escape. Correct the amount of slurry and urine fed in daily. It may take some weeks for the gas plant to correct itself.
	Air in gas pipe.	Allow it to escape until there is a definite smell of gas.

General Problem Cont.....

Problem	Possible causes	Remedy
Slurry does not flow into digester.	Sieve in inlet pipe(if fitted) clogged.	Remove, clean and refit.
	Inlet pipe blocked. Slurry too thick.	Clear blockage by pushing pole down inlet pipe. Correct consistancy.
Digester pit overflows (Drum plant)	Outlet pipe blocked.	Clear blockage by pushing pole down outlet pipe.
Slurry reservior overflows (Dome and Tunnel plants).	Slurry outlet slot blocked.	Clear. Slurry often dries in the overflow slot and blocks it especially if it is not bell mouthed (figure 5.1)
Slurry does not come out of plant.	Outlet too high.	Lower the outlet level.
	Porus masonary used to build digester or serious cracks formed.	Empty plant, if walls cracked, repair them. If masonary porus then plaster (replaster) inside of digester.
	Burners (Sotves)	
Burner flames are long and weak, start far from the flame ports, do not stay alight.	Incorrect primary air aupply.	Place cooking vessel on stove and adjust primary air supply with air adjuster.
	High pressure gas.	Partially close gas tap till flame is normal.
Flame pulsates.	Condensate (Water) lying in main gas pipe.	Remove water from water traps. If the problem continues, then water is lying in part of the pipe from which it can't drain. The pipe must be relaid at a slope of 1:100 and an extra trap fitted if necessary.
Flame small.	Gas jet in burner partially	Clean jet with sliver of wood or bamboo. Do not damage or enlarge jet.
	Flame ports partially blocked.	Clean out.
	Water in gas pipe.	Remove water from water traps

Burners (Stoves) Problems Cont.....

Problem	Possible Cause	Remedy
	Low gas pressure:	
	Drum: scum preventing free movement of drum.	Turn drum to break up scum and remove dried slurry between sides of digester and drum. If necessary remove drum and clear away scum.
	Drum too light.	Add weights to gas drum.
Dome or Tunnel:	gas outlet blocked with slurry.	Open end of gas outlet. Clean outlet with rod holding face to one side of pipe to prevent it getting splashed once pipe starts clearing itself under gas pressure ! Refit, ensuring joints are gas tight.
	Gas pipe or valve blocked with slurry.	Dismantle pipe line near gas outlet and clean pipe and valve. Refit, ensuring joints are tights.
No gas at burner.	Main gas valve closed.	Open.
	Burner tap blocked.	Certain insects build nests with mud in open ended pipes or gas taps. Clean out with a sliver of wood.
	Condensate (water) blocking main gas pipe.	See "Flame pulsates" above.
	Gas outlet, or nearby pipework.	Clear blockage.
	and valve blocked.8	See "Flame small- Dome or Tunnel" above.

LAMPS

Light is poor.	Gas adjuster requires adjustment.	Adjust until mantle glows brightly. Now mantles take time to burn, form the correct shape and to allow the flame to go inside the mantle. Only then will the mantle burn brightly.
	Low gas pressure.	see "Burners : Flame small: low gas pressure" above.Most lamps require a minimum of 75 mm W.G. to burn brightly.
	Obstruction in lamp ventury.	This is a common problem. Clean out thoroughly with bit of cloth wrapped around pencil.
	Wrong type or size of mantle.	Use correct type and size to suit lamp.
Mantle break frequently.	Gas pressure too high.	Adjust pressure with gas tap. Open gas tap slowly.
No gas at lamp.	Gas jet in lamp blocked.	Gas adjuster should be operated to clear the jet.

For other possible faults which are common with burners as well, refer to that section.

Servicing of Plants

(How to service assessories and appliances is given in chapters 6 and 7)

Floating steel drum design

Annual painting

Gas drums need to be painted annually particularly on the outer sides. There is no oxygen on the inside and rust rarely occurs. The lowest part of the sides, which is mostly submerged in slurry, is generally free of rust.

There is no need to remove the drum for painting. Any weights should be removed from the gas holder, the main gas valve closed and the drum allowed to fill till gas bubbles out from under the side. All dung must be throughly washed off using clean water and all rust scraped off using a steel scraper. Then the surface must be cleaned with emery paper or a wire brush. Before painting, the drum must be clean, free of dust and dry. Bare metal should be given a coat of primer (Anti-saline metalic primer). Once this paint is dry the whole drum should be painted with a top coat (high build black bitumen paint), the sides being particularly well covered as this is the part which suffers the worst from corrosion. The gas should not be used for 24 hours in order to let the paint dry.

Scum Removal

A thick layer of scum can prevent the free movement of the drum and can be a cause of reduced gas production.

In a well run plant it may never be necessary to remove scum. However, at a carelessly operated plant, where straw, grass, sawdust, etc., are mixed in with the slurry and especially one using thin slurry, it could be necessary after six months.

First of all it is necessary to remove the drum. The main gas valve is closed and the drum allowed to come up to its maximum height. There must be no smoking or naked light . The drum is lifted off over the central guide using the handles provided, and set down at the side of the digester. The scum can now be removed from the top of the digester. While the drum is off, the inside should be cleaned and the condition of the paint work checked. It does not usually need attention but if there are any signs of rust it should be repainted before replaceing the drum it is very important to let all the air escape as described earlier in this chapter under "starting a plant" .

Repairs

If drums are not painted regularly, then rust, particularly on the sides, will quickly become a serious problem.. If one or two small holes are found they can be repaired using an epoxy resin such as "Araldite". If the drum has a few holes it is most likely that soon many more will appear. Neither welding on of patches or cutting out defective pieces and replacing them has been found satisfactory. Rust continues under the patch where it cannot be painted and in the badly rusted old steel, even under new paint.

The only thing to do is to replace the whole drum.

Dome Plants

One or two domes have cracked and leaked gas due to poor quality cement being used. The whole plant must be emptied (the contents can be stored in a pit for reuse after repairs), cleaned out and repaired. The repairs depend on the seriousness of the crack. It could involve more plastering, or removal of old plaster and replastering. So far it has never been necessary to replace a dome.

Scum breakers have broken off on a number of occasions but they have not been repaired. As farmers do not complain of gas production after the breakage it is questionable if they are really needed. If scum were a problem it would be necessary to remove the slurry in order to get at the scum to remove it.

Tunnel plants

A limited number of these plants have been built. So far the plastic lining has never had to be serviced and scum has never been a problem. An advantage with this plant has been the thicker slurry used which prevents scum forming so readily. If the plastic lining had to be repaired or scum removed it would be necessary to remove the slurry from the plant first of all.

Safety

General

Biogas when used as instructed, is safer than other gases commonly used in houses. It can only burn when there is 9 to 17 % biogas mixed with air which are narrower limits than other gases. If all the air is removed from the gas plant and pipes before use, both at the time of installation and any repairs (as explained earlier in this chapter) the gas plant cannot explode because the pressure of gas is greater than atmospheric and therefore air cannot enter the system. For this reason flame traps are not used in gas pipes in Nepal.

110

Leaks in the house pipe`work

If gas is smelt in the house, it is certain there is a serious leak. Doors and windows should be opened to let the gas dissipate and fresh air come in. The main gas valve should be closed and there should be no maked flames, either lamps or fires, nor smoking until the smell of gas has gone. The first thing to check is that all gas taps for lamps and burners are closed. The main gas valve can be opened and attempts made to locate the leak by smelling where the gas is coming from. Soapy water can be put on suspected leaks, often at taps or joints, and if bubbles form then there is definitely a leak. The full proceedure for finding and repairing gas leaks is given in chapter 6.

Entering a digester

Care must be taken if, for any reason, a person must enter a digester. Biogas is not poisonous, but it does not contain oxygen so anyone breathing it can suffocate. Biogas is slightly heavier than air and will lie in the bottom of a digester and only slowly mix with air and disapate.

All the slurry should be removed from a digester pit before anyone enters it, as it will continue producing biogas. To make sure there is no gas lying in the bottom of the pit a small animal such as a frog, chicken or rabbit is lowered down and watched. If, after 5or 10 minutes when the animal is brought out, it seems to behave normally it indicates that there is enough air in the digester and it is safe to enter. Sould the animal faint or lose consciousness it indicates a lack of air and it is not safe to enter until the gas been disapated. This will take time but can be speeded by blowing in air, e.g. with a winnowing machine. Alternatively the gas can be lifted out in buckets and poured away so that it cannot re-enter the plant by flowing down the inlet or outlet. As the gas cannot be seen it is difficicult to tell the effectiveness of this operation. If a worker feels dizzy while working inside the digester or finds it hard or uncomfortable to breath he must leave immediately and rest in a place where there is good air circulation. There should always be a second person to pull out a worker should he faint in the digester.

CH. 10 IMPROVEMENTS ON BIOGAS PLANT PERFORMANCE

M. Lau-Wong

10.1 Identifying the problem

The majority of instances of plant malfunctioning encountered in Nepal are caused by mechanical problems, such as leakage in valves and piping and crack in digester pits (Ch.9). Occasionally though, the microbial process itself can go awry, and guidelines are given in this chapter for troubleshooting and rectification.

Note that plant malfunctioning can affect gas production in two ways:

1) Reduction in the quantity of gas output, and
2) Decline in the quality of the gas --- low methane content with a large proportion of incombustible or undesirable gas.

The symptoms and causes of common problems are summarised in Table 10.1. Most problems can actually be avoided if the plant operators are aquainted with the ABC of biogas production. For plants that function normally, gas production can be enhanced by manipulating substrate (feed) input or operating conditions as described in the following sections.

10.2 Quantity of feed input

Interestingly, the causes of low gas production we frequently encounter are quite obvious and can easily be overcome. Farmers usually add considerably less amount of gobar (cattle or buffalo dung) than recommended and complain about insufficient gas. It is also common that they add more water for mixing tham necessary. If water is excessive such that slurry solids fall below 4 to 5% by weight, stratification occurs as the denser solids seperate from the liquid and settle to the bottom. Furthermore, extra water input can decrease the retention time of slurry in the digester to such an extent that the slurry is much unexhausted as it leaves the plant as effluent. Efficiency is thus reduced, and in severe cases when the dilution rate is too high, wash-out of the micro-organisms can occur (Ch. 14). In areas where water shortage is a problem, the recommended water to substrate ratio should be carefully observed so that wastage can be prevented.

Table 10.1 : Diagnostic Chart for Process Malfunctioning

Cause	Symptoms	Diagnostic tool/treatment
Mechanical problems	Little or no gas	See Ch.9
Input quantity (water or substrate) insufficient or disproportioned	Gas reduced. If water in excess, stratification occurs	Daily input weighed or measured and adjusted to recommendation.
Quality of input poor or nutrient overdose	Quantity of gas and/or methane content low	Check CN ratio. If ammonia or urea too high, adjust level
Microflora imbalance; usually too many acid-formers and too few methanogens	pH low or acidic (below 6.5). Gas reduced, foul or incombustible, being low in methane	pH easily detected with pH indicator paper. Lime or other alkali can be added to increase pH.
Biogas microflora not established	Long lag time at start-up, gas foul/incombustible	Seeding of new plant with slurry from operating plant.
Indigestibility of feed	Gas reduced. Little change in feed as seen in effluent	Check lignin content of feed. If straw used, cut to small size and add required nitrogen
Gas trapped by scum formed by fibrous feed	Gas reduced. In drum plant, scum visible at surface	Before addition, fibres removed or reduced in size. If scum severe, clean out plant
Toxicity from chemicals such as soap, pesticides, antibiotics, or high level of nutrients.	Little or no gas, microflora inactivated or exterminated	Feed and water checked for contamination. Digester slurry may have to be replaced entirely with fresh slurry.
Temperature of slurry unsuitable	Gas reduced. Overflow of slurry in displacement plants infrequent	Temperature measured at outlet. Increase temperature by insulation and heating methods.

10.3 Quality of substrate

Carbon-nitrogen balance:

The quality of the substrate or feed determines the amount and nature of the gas produced. In the Indian subcontinent, gabar is a popular feedstock for biogas plants. Gobar, though plentiful, is nevertheless the product of animal feed that has passed through the digestive tract once. In this process, the easily digestible nutrients are removed leaving the more recalcitrant materials like lignocellulose behind. Gobar is therefore deficient in nitrogen, especially if the animal feed is poor, and the methane content of the biogas produced rarely exceeds 55%. Furthermore, if gobar is left exposed for a long period, condiderable amount of nitrogen can be lost in the form of ammonia, as much as up to 40% in a few days.

Other types of materials such as poultry, pig and vegetable waste, water hyacinth, algae, molasses, animal urine, and night soil have been investigated for their potential as substrate or supplement (Subramanian, 1977). Poultry waste, pig waste (Kwon and Kim, 1978), night soil, and water hyacinth, all having higher nitrogen content than gobar, showed promising results. However, adoption of high gas yielding materials is practically limited by their availability and people's attitute towards using them. Pigs are only raised by people of certain castes in Nepal and night soil is considered unclean.

Addition of vitamins and a rich nitrogen source such as yeast extract stimulates the growth of methanogens, but their high costs and unavailability in poor rural areas inhibit their use as supplements. Much emphasis, therefore, should be put in the search for local materials that are rich in nutrients, abundant in quantity, but are not yet gainfully utilised. Examples are animal urine (nitrogen rich) and straw (carbon rich). Combination of these materials is necessary to give the gas plant a 'balanced diet'.

In fermentation, bacteria require atoms of carbon and nitrogen in the ratio of 30 to 1 (or 26 to 1 by weight) for metabolism and assimilation. To determine a balanced diet, the proportions of each material in the substrate mixture can be calculated provided that the carbon and nitrogen contents of the individual materials are known (see Section 10.4). A resulting carbon-nitrogen or CN ratio between 20 and 30 by weight is acceptable. Table 10.2 gives the CN ratio, C%, and N%

of some potential substrates for biogas plant.

Lignocellulosic residues are deficient in nitrogen but rich in carbon. However, most of the carbon cannot be readily utilised by being bound in the lignocellulosic complex. Under the anaerobic condition inside a biogas digester, lignin is not decomposed and its contribution of carbon should therefore be ignored. Total carbon can be determined by combustion and subsequent measurement of carbon dioxide, and total nitrogen can be measured by Kjeldhal method. The following example illustrates how the CN ratio can be calculated for a high lignin feed like cattle dung.

Calculation of the CN ratio of cattle dung

Lignin content = 12% of DM (dry-matter)

Carbon content = 43% of DM

Nitrogen content = 1.2% of DM

Unavailable carbon = carbon in lignin = 5.2% (assuming 43% carbon in lignin)

∴ Carbon available = 37.8%

and CN ratio = 31.5

The CN ratio of 31.5 for this particular gobar sample is slightly outside the desirable range. Grain fed cattle tend to produce dung richer in nitrogen and consequently a lower CN ratio.

Table 10.2 : CN values, carbon and nitrogen (% of dry-weight) of potential biogas plant substrates

Material	CN ratio	%N	%C	% water	Comments
Gobar (Cattle/ buffalo dung)	20-30	3-4 1-2	35-40	72-85	Grain or grass fed, dung fresh. Straw fed
Horse dung	25	2	58	70-75	Dung drier if old, especially when air humidity is low (House, 1978).
Sheep dung	20	3.75	75	68	
Pig dung	14	3-4	53	82	
Poultry dung	8	3.7	30-35	65	
Human faeces	6-10	4-6	40	75-80	
Human urine	80	15-18	13	95	
Water hyacinth	15-23	1.3 -2.6	24-35	93-95	Air dried. Values vary with stages of growth and habitat. (Gopal and Sharma, 1981).
Rice straw	47.2	0.56	40	5-10	Calculated from data in VanSoest and Robertson, 1978.

145

10.4 Addition of urine

Urine which has about 2% urea is a cheap and readily available source of nitrogen. In cow sheds cattle urine can be collected in cemented ditches and fed directly into gas plants. Human urine and night soil can also be utilised by the attachment of latrine. The number of users of the latrine should be controlled so that the input volume does not exceed the plant capacity and urea is maintained below its inhibitory level. Calculation for a plant fed with cattle dung and human urine is illustrated below. By varying the assumptions, the number of latrine users can be estimated for different conditions.

Calculation of the number of latrine users for a gas plant fed with cattle dung and human urine

Assume daily input for a steel drum plant ($14m^3$ nominal daily gas production) to be 300kg cattle dung of 20% DM and urea not exceeding 1% of the dry matter of the mixture.

Contribution of carbon from urine being negligible,

Carbon available from mixture = 300kg x 20% x 37.8% = 22.7 kg

(from Section 10.3, cattle dung has 37.8% available carbon).

Nitrogen from mixture = nitrogen from dung + nitrogen from urine

= 60kg x 1.2% + 60kg x 1% x 46.7% = 1 kg

(Urea has 46.7% nitrogen).

∴ CN ratio = 22.7 which is acceptable.

Now urine comprises 2% urea (20g/l) or 0.93% nitrogen (9.3g/l).

If one person contributes 1 litre urine or 20g urea per day,

Number of latrine users = 0.6kg (urea from urine) ÷ 20g =

= 30 persons

This is a conservative estimate, since the amount of urea tolerable is somewhat higher.

10.5 Pretreatment of lignocellulosic substrates

Lignocellulosic materials such as cereal straw and stalks decompose with difficulty, but their abundance at harvest time has prompted much effort to tap their reserve of energy and carbon. Pretreatment

is often used to increase their digestibility; and supplemented with nitrogen, they can serve as feedstock for animals or fermentation processes such as a biogas process. Pre-treatment methods include:

1) Physical or mechanical reduction of size -- grinding, chopping, and milling disrupt the crystallinity nature of cellulose fibres and expose more surface area to chemical and enzymic actions. Usually this is the initial step followed by chemical or enzymic degradation.
2) Chemical degradation -- using alkalis, acids, or oxidising agents. Sodium hydroxide remains to be the most inexpensive and effective agent. For review, see Lau, 1979.
3) Steam and pressure -- inefficient unless accompanied by heat or chemical. One should be cautioned though: if pretreatment conditions are too severe, lignin is broken down to low molecular weight units inhibitory to the microflora (Han and Callihan, 1974).

Pretreatment with chemicals, steam, or pressure incurs expenses and requires equipment and training of personnel. Moreover, the excess of acid or alkali used has to be neutralized before fermentation. These complications can only be justified for big commercial operations and community plants for which technical assistance is available. For small-size domestic plants, one should simply go as far as chopping or grinding the straw residue to a smaller size (no longer than 1 cm long) to prevent the accumulation of a gas-trapping scum on the slurry surface. Nitrogen should also be supplemented in the form of urea, urine, or other compounds, since the CN value of straw is high. A typical CN value of rice straw is 47, excluding the lignin fraction.

10.6 Composting material as substrate

Other methods of pretreatment of lignocellulosic residues include the use of microbes and enzymes. Under the anaerobic condition inside a biogas digester, decomposition of lignocellulose proceeds slowly while lignin is not degraded at all. Attempts were made to elucidate an anaerobic microflora that degrades lignin at mesophilic temperature but unsuccessful (Wohlt et al., 1978; Hackett et al., 1977).

Nonetheless, lignin is decomposed aerobically and residues can first be degraded to a limited extent outside the digester. Successful

composting is marked by transformation of the fibres from a rigid to a flaccid texture as bonds are broken and carbon consumed; at this point, the material should be fed into the gas plant before further exhaustion.

Methods for building compost are numerous. It can be elaborate involving built-in channels for ventilation (McGarry and Stainforth, 1978), or it can simply be a pile of residues with manure sandwiched in between different layers. Composting material can be straw, grass, stalks, stovers, or vegetable matter. The compost pile should be kept moist by watering; a slight concave top prevents runoff of water. Decomposition can be accelerated by the addition of manure or effluent from biogas plant, and occasional turning or stirring of the heap for aeration as the process is mediated by aerobes like fungi. By packing the material loosely less than a metre high, decompostion is also achieved but takes a longer time. If the initial pH is not neutral, it should be adjusted to 7 or slightly alkaline with lime.

Composting can be facilitated by inoculation with lignin degrading fungi such as Trichoderma viride and the use of cellulase enzymes. As compost materials are usually rich in carbon but deficient in nitrogen, nitrogen-fixing bacteria such as Azosirillum can be inoculated directly. These bacteria can be mass produced cheaply in a manure-soil carrier and are normally used for inoculating seeds for cereal crops (Subba-Rao, 1978). Direct inoculation of nitrogen fixers to the digester slurry, however, will not be effective since the percentage of free nitrogen gas in the digester is low.

As considerable amount of heat is generated from aerobic decomposition, composting can serve the additional purpose of heating and insulation in winter if built at ground level directly above underground gas plant.

10.7 Toxicity

Besides the basic elements hydrogen, oxygen, carbon, and nitrogen, micro-organisms require other elements such as sulphur, phosphorus, metals, and trace minerals for growth. Metal and trace elements are benefical at low concentration, but become inhibitory or toxic at higher levels. Alkaline cations such as sodium, potassium, calcium, magnesium,

and ammonium were found to be stimulatory at levels below 200, 400, 200, 150, and 200 mg/l, but start to become inhibitory at levels above 3500, 2500, 2500, 1000, and 1500 mg/l respectively (Jewell et al, 1978; McCarty, 1964). Heavy metals such as copper, zinc, and nickel are toxic at levels exceeding 1 mg/l. A sulphur source of about 0.85 mM concentration is essential, but at a level of 9 mM all inorganic sulphur compounds other than sulphates are inhibitory to both cellulose degradation and methane formation, hydrogen sulphide being the most potent of all (Khan and Trotter, 1978).

Since pesticides and herbicides are used in some agricultural practices and can remain on crop residues used as substrates, their harmful effects on anaerobic digestion were studied (El-Halwagi, 1980). When no other causes of plant malfunctioning can be traced, it is worthwhile to check if the feed, both substrate and water, has been contaminated by pesticides, herbicides, antibiotics, or other substances harmful to the microflora. Water used for mixing may have been taken from streams polluted with chemical wastes from a factory upstream, or may contain soap or detergent from previous washings. Chlorinated hydrocarbons such as chloroform and carbon tetrachloride are extremely toxic. In severe cases of contamination, all the slurry may have to be replaced.

6.8 Control of pH (acidity-alkalinity) level of slurry

In anaerobic digestion, different groups of micro-organisms have different functions and their own preferred environment. Acid-formers enjoy an acidic one (pH 4 to 6) while methane-formers prefer a neutral or slightly alkaline pH. In a normal process, pH is maintained between 6.5 and 7 — a reasonable compromise — by the buffering actions of carbonates and bicarbonates of ammonium formed during the process. But when imbalance occurs, one group of bacteria, usually the acid-formers, predominates. As a result, the slurry becomes too acidic for the methane-formers and methane production declines. This problem is more commom at the initiation of new plants that have not been seeded with actively fermenting slurry from an old one. Gas if formed is foul or incombustible, and the slurry pH drops below 6.5.

Fortunately, this situation can be easily rectified by the addition of alkali if detected early enough. Lime or calcium oxide is the cheapest

alkali and can be added to the outlet mixing pit of dome and tunnel type plants. The pH should be monitored constantly with a pH indicator (paper or meter) until neutrality is reached. Further input of substrate should be withheld until the gas produced becomes combustible. This may take several days to a week. Soda or sodium bicarbonate can also be used. It is more expensive but more soluble than lime. Other alkali like sodium hydroxide, potassium hydroxide, and ammonia are more expensive and less readily available.

10.9 Microflora -- Seeding, recycling, inoculation with specific cultures

The quality and quantity of biogas depend as much on the nature of the substrate as the microflora. A balance of the right groups of bacteria is essential for an efficient process. Cattle dung normally has the right mixture of rumen bacteria for methane generation. However, especially during start-up of gas plants, the process can go awry. As a safeguard, new plant should be seeded with slurry (about 2 % inoculum) from an operating plant. At start-up, normally there is a lag period before gas is produced; pH drops initially and then increases as the process stabilizes. Without seeding, the lag period can take up to a week depending on the temperature. But with seeding, it can be reduced to one or two days.

Mixing is limited in plug-flow reactors especially if the slurry is thick. To decrease the lag time for fermentation of daily fresh input, it can be inoculated with effluent from the same plant in the mixing pit. In other words, the biogas microflora which is abundant in the effluent is recycled back into the plant.

Attempts have been made to isolate micro-organisms beneficial to biogas production from waste and sewage. These cultures can then be used for inoculation (Ch. 14).

10.10 The temperature effect

Temperature is a very important parameter affecting the performance of biogas plant. In the Terai or the southern plains of Nepal, digester temperature drops from a summer maximum of 31°C to a winter minimum of 20°C, with a concomitant decrease in gas production of 40 to 50%. Winter in temperate regions is more devastating. Various methods have

been devised to increase the digester temperature in winter; these include insulation, composting, solar heating of plant and influent, erecting of green house, and utilization of external and waste heat (see Ch. 18). These methods or their combinations should be adapted to make the best economical use of local materials and facilities.

Experiments in the capital Kathmandu (1324m altitude) showed that with composting alone, slurry temperature of dome plant increased by 3°C and gas increased by an average of 54% throughout the winter. For underground gas plants, composting may work well up to an altitude of at least 2000 meters. Gas plants above ground are more difficult to insulate but can possibly be covered with specially weaved straw mat. Water can be preheated in buckets before mixing; its transparency enables radiation to penetrate easily, whereas opaque slurry stops radiation near the surface.

Daily influent should be retained in the inlet pit covered with a plastic sheet until about 2:30 p.m. By absorbing the solar radiation, the slurry temperature in the inlet can be increased by as much as 9°C on a sunny day and 4.5°C on a cloudy day. The pit should be large but shallow, so that the radiation can penetrate most of the slurry. A slurry depth below 7.5 cm is desirable (Vol. II, Ch. 6).

In areas where geothermal heat sources are present, gas plant can be built in their vicinity and water from hot springs and geysers can be channelled for internal heating of digester.

10.11 Agitation

The need for agitation in digester is a topic of contention. There are two kinds of agitation, each for a different purpose.

The first kind is merely used for breaking up scum and usually involves a metal contraption fixed near the surface of the digester slurry. Upon rotation, it breaks up scum of straw or fibres accumulated at the surface thus releasing trapped gas from the slurry. However, if long strands of straw in dung are removed before feeding, a scum breaker is not necessary. In fact, most of the scum breakers we installed are not functioning because of breakage outside the gas plants.

The other type of agitation involves the installation of an impeller or stirrer that penetrates deep into the slurry. Its mixing action enables a more uniform distribution of micro-organisms, influent, metabolic products, toxic materials, as well as heat inside the digester. Scum layer if present can be dispersed and settling of solids can be prevented. Installation and continuous operation of impeller, however, are expensive, and the increase in gas yield is not substantial enough to justify the economics of its presence. In displacement digesters, the ascent of gas bubbles, thermal convective current, and displacement action of slurry may render extra agitation unnecessary. Mixing has one disadvantage though: it stirs up helminth or parasite eggs, thus reducing their time and the chance of their extermination inside the digester.

Vol. I Chapter 11

THE ECONOMICS OF BIOGAS SYSTEMS

- with discussion of analytic techniques --

M. Lau-Wong

153

PAGE

SUMMARY 1

SECTION 1: ANALYSIS TECHNIQUE

1.1 Why bother about economics? 3

1.2 Techniques for comparing costs and benefits. 4

1.3 Determination of costs and benefits in financial analysis 6

1.4 Determination of costs and benefits in economic analysis 7

1.5 Sensitivity Analysis

SECTION 2: ANALYSIS OF VARIOUS BIOGAS SYSTEMS

2.1 Financial Analysis for a domestic biogas plant 11

2.2 Financial analysis of domestic plant with credit 13

2.3 Financial Analysis of income generating milling system 14

2.4 Financial analysis of a biogas irrigation system - and its comparison with a diesel one 17

2.5 Economic analysis of domestic biogas system 18

Tables

1.1 Capital and recurring costs for a domestic plant 22

1.2 Savings on Fuel 22

1.3 Financial Analysis - domestic dome type plant 23

1.4 Measures of the worth of domestic biogas plant with and without credit financing 24

1.5 Typical Business for Mill 24

1.6 Fuel Requirement for Biogas System 25

1.7 Fuel Requirement for Diesel System 25

1.8 Biogas System - for Hulling and Milling 26

1.9 Financial Analysis for Diesel Hulling/Milling System 28

1.10 Irrigation requirements by crops 29

1.11 Costs for a biogas irrigation system 31

1.12 Input requirement for rice and wheat crop 32

1.13 Gross profit from extra crop yield 32

1.14 Comparison of biogas irrigation systems run on biogas or on diesel alone 32

1.15 Economic Analysis - Costs and benefits of a domestic biogas system 35

Reference

The Economics of Biogas Systems

Summary

At its present cost, domestic biogas system for cooking and lighting is acceptable in places where fuelwood price is high, such as in the capital Kathmandu and some towns in the Terai. The Butwal (a town in the Terai) price of 0.6 NRs/kg is the cut-off point at which the benefit-cost ratio is almost 1. In the hills where the fuelwood price is lower, with an average of 0.36 N Rs/kg, a 41% subsidy is required to bring the same returns.

Since subsidy comes ultimately from the society itself, it cannot be justified unless the social and economic benefits of biogas outweigh its cost to the society. One oft-cited benefit is the conservation of forests by replacing fuelwood which, according to a survey done by Tribhuvan University in 1975, account for 93% of domestic fuel consumption. As explained in the analysis, the cost of deforestation proves extremely difficult to quantify. Nevertheless, economic analysis showed that if the economic value (which may be very different from its market price) of fuelwood hits 0.39 NRs/kg, the benefit-cost ratio becomes 1 at a discount rate of 15%. In other words, if the economic value of fuelwood is above 0.39 N Rs/kg, a subsibized domestic biogas programme should be considered.

In our economic analysis, a comparison of biogas system and afforestation was made. If forest productivity can be maintained above $7m^3$/ha.yr., which is a target not difficult to achieve, afforestation scheme would cost less to the society than biogas system. However, in afforestation, there is an inevitable lag between the time of investment and the first harvest whereas for biogas the effects are immediate. Since fuelwood shortage is imminent, the best strategy for the country is probably to implement both programmes along with the development of other renewable sources of energy such as hydroelectricity.

For income generating activities, such as rice hulling and flour milling, a biogas system (which supplies fuel for cooking as well) is as competitive as a diesel one, provided that the digester temperature can be maintained at or above 28°C and fuelwood price

is higher than 0.3 NRs/kg. As the analysis shows, the comparison is extremely sensitive to fuelwood price and gas production, the latter being strongly dependent on temperature. Either system by itself is financially viable but sensitive to the amount of grain brought in for hulling and milling and how efficient the fuel is used. Therefore before installing a rice and flour mill, it is essential to survey the market first to see if potential business is enough to bring the desired returns.

As for using biogas for irrigation, the internal rate of return is high (above 50%) even without subsidy. Using diesel, the rate of return is higher than 50%). In fact, with only 6% subsidy, a biogas system would give the same net present worth as a diesel one. The subsidy may be worthwhile since utilization of biogas reduces reliance of the country on the import of diesel thereby saving foreign exchange. The economics is extremely sensitive to the actual land area irrigated. If water supply is limited, the cropping patterns should be adjusted to optimize the use of water and maximize the irrigated area.

In conclusion, the returns are high if biogas is used for income generation and irrigation. For domestic purposes such as cooking, an afforestation scheme would cost less than a biogas one. However, if latrines are attached to biogas plants for the treatment of human waste, the socio-economic value of biogas plant would definitely increase. This is actually the practice in China where waste processing is the primary objective and biogas is only a by-product. In Nepal, the idea of using gas derived from human waste is repugnant to most people. Unless this cultural barrier is overcome, domestic gas plant using cattle dung will have very limited practicality.

50

SECTION 1: ANALYSIS TECHNIQUE

1.1 Why bother about economics?

In Third World countries, the development of renewable energy resources such as biomass, solar and wind energy is now in vogue. Where resources are scarce and funding difficult to come by, analysis tools are indispensable for comparing the worth of these numerous alternatives so that investment can be made wisely.

An economics study is a vital part in the planning of a project, not its aftermath. Data from the actual implementation of the project would certainly make the study more precise, but preliminary analysis should commence as soon as basic information is acquired. A good analysis identifies constraints and risks, points out courses of actions for enhancing the chance of success of the project, and above all indicates whether the project should be undertaken at all. If the economics appears promising, field tests can be devised not only to check technical feasibility, but also to collect more social and economic data in the local situation. As testing proceeds, important factors which are initially overlooked can be included in the analysis, the direction can be modified to maximise benefits, and if necessary decision can be made to forgo the project. However, one must bear in mind that such analysis is only a tool for evaluating projects: it should never usurp the place of sound judgement in decision making. Financial as well as social, organisational, administrative, and technical considerations serve the basis for decision and gathering of these facts is a time consuming but essential process.

In project analysis, national planners in particular are interested in the total return or benefits to the society as a whole, regardless of who confers them or who receives them: The tool applicable in this case is economic analysis described in section 1.4.

Ultimately, the test of the product is its acceptance in the market. Individual and joint investors are most concerned about the financial returns in their venture - whether they have made the most lucrative deal and get the best return for their investment. Financial analysis is a tool for determining this and it simulates the reasoning or evaluation process of the prospective investors. Nonetheless, even if an undertaking is shown financially sound, the attitudes of different income groups in a society towards adopting new technology can still be drastically diverse.

In developing nations, it has been observed that well-off farmers and middle-class income earners are more open to innovation, whereas the poor are more reluctant to risk the little they have, since failure in the venture would mean total disaster, Therefore, to choose among alternative project for maximising social and economic return, it is crucial to identify and understand the various forces at work in the target group or area.

1.2 Techniques for comparing costs and benefits.

An obvious method for determining whether a project would give a desirable return on our investment is to compare the costs and benefits. There are many analytical techniques for measuring project worth but no one that is best for all cases. Three common measures of project worth are listed below:

1. Benefit-cost ratio
2. Net present worth
3. Internal rate of return.

These are discounted measures and to understand how they are used one must first grasp the concept of "discounting". If we lend our money out to someone, we expect to get interest for the use of that money. Suppose $1000.00 is borrowed for one year at an interest rate of 10%. At the end of the year, we expect to receive 1100 (=1000 x 1.10) from the borrower. Thus $1100 at the end of one year is equivalent to $1000 at present, i.e. it has a <u>present worth</u> of $1000/-. If the loan is extended for another year, the amount due at the end of the two years is $1210 (=1100 x 1.1). Note that compound interest is involved since the borrower must pay interest on the amount ($1100) that would have been paid at the end of the first year. Our calculation shows that $1210 two years from now has a present worth of $1000/-. Similarly, the amount due for $1000 borrowed for five years is: $1000 x 1.10 x 1.10 x 1.10 = $1610.51 and the present worth of $1610.51 five years in the future is therefore $1000. This method of reducing a future amount to its present worth is known as <u>discounting</u>: the "interest" rate used, in this case 10%, is known as the discount rate. The longer the period and the higher the discount rate, the smaller is the present worth. Since most project lasts for more than one year, the actual timing of costs and benefits can make a big difference in their attractiveness. The way to compare projects with different future cost and benefit streams (i.e. cost and benefit spread over a number of years) is to discount future benefits and costs to their present worth.

Now let us turn to the definitions of the three measures of project worth mentioned above.

(1) Benefit-cost ratio = $\frac{\text{total present worth of benefit stream}}{\text{total present worth of cost stream}}$

the benefit and cost for each year of the life of the project being discounted individually to the beginning of the project and then summed up. If this measure is applied, project will be accepted when benefit-cost ratio is greater than one.

(2) Net present worth = total present worth of benefit stream - total present worth of cost stream

Project will be accepted when this is positive. As in the previous measure, acceptance means that the project can recover all investments and earn a return on investments equal to or higher than the discount rate.

(3) Internal rate of return = the discount rate required to make the net present worth zero.

A project is considered attractive if the internal rate of return is higher than the desired return rate, not attractive nor accepted if otherwise.

Now the question arises: what should the discount rate be? The discount rate is generally taken to be equal to or higher than the local interest rates on loans. It varies from place to place and in India and Nepal, a value of 15% is reasonable (for further discussion, see World Bank, 1975).

Once the discount rate is determined, the computation for benefit-cost ratio and net present worth is relatively straightforward. The internal rate of return, unfortunately, can only be found by trial and error. It is the discount rate that reduces the net present worth to zero and is always rounded to the nearest whole percentage. It may be helpful to the reader at this stage to go through the example in section 2.1 before proceeding further.

When presented with <u>inexclusive</u> alternative project, they, should be ranked according to their internal rate of return. Benefit-cost ratio and net present worth are poor indicators of ranks and their use may lead to erroneous judgement.

In <u>selection among mutually exclusive</u> projects, a project with higher cash flow is more attractive than one with low cash flow since implementation of both is impossible. In this case, net present worth, being an absolute measure, will give the right choice.

On the other hand, internal rate of return may give the wrong choice since small projects may have low net present worth despite high returns. Benefit-cost ratio is likewise unreliable for choosing mutually exclusive projects.

Finally, how long is the project life? This has to be determined beforehand since the analysis has to be carried out over this period. Generally in an agricultural project, project life is taken as the period the major capital items can last. In industrial and manufacturing project, obsolescence of the project can terminate its economic life earlier. Therefore in analysis, a usual practice is to choose a period comparable to the economic life of the project. Note especially that the discounting techniques described here have already taken depreciation into account. At zero internal rate of return or the breakeven point, capital is already recovered as gross benefit equal gross costs.

1.3 Determination of costs and benefits in financial analysis.

An analysis undertaken from the perspective of any party involved in a project - be it the government, a private agency, the contractor, or an individual - is called a financial analysis. The party concerned is interested in knowing the returns of its contribution. Therefore in doing financial analysis for any one party, it should be stressed that the costs incurred and benefits accrued are the ones for that particular party.

One common mistake seen in economics study of development project is the comparison of costs and benefits "before" and "after" the implementation of the project. In fact, the comparison should be "with" and "without" since the situations "before" the project and that "without" the project can be quite different and give rise to different costs and benefits.

Identifying costs

Costs are normally easier to identify than benefits. During the preparation or installation period, costs may be incurred from services, labour, equipment, and supplies. During operation, costs may include labour, maintenance, repair and any forms of input and servicing required. If the project eliminates some form of labour, for instance in the case of biogas which may eliminate labour involved in collecting fire-wood, the cost of such labour should logically be subtracted from the operation cost (or added to the benefits, which amounts to the same thing).

160

This is also an illustration of counting costs "with and "without" the project. Another illustration -- if a project of growing cash crop is initiated on land used traditionally for growing food grains, the value of the production forgone (in this case food grains) should be included as costs or deducted from the benefits.

Obviously, taxes and repayment of loans are part of the costs whereas subsidies reduce costs.

Identifying Benefits

The benefits from an agricultural project can be measured from increased output or production. The product can be consumed on the farm or sold, but in either case it should be valued at its market price. Benefits can take the form of saving as well. For example, the use of biogas for cooking eliminates or reduces the consumption of other kinds of fuel such as firewood and kerosene. The benefit accrued should therefore be the saving on firewood or kerosene valued at their market prices. In some places in the Terai (Southern plains of Nepal), firewood can be gathered from the jungle free. However a price should still be assigned to reflect labour cost incurred in gathering wood.

A salvage value of equipments and other assets at the end of their service or economic life should be estimated and included in the benefit at the right time.

1.4 Determination of costs and benefits in economic analysis .

Economic analysis considers the profitability of a project to the whole society. In contrast to financial analysis, it does not worry about income distribution and capital ownership; it does not matter who actually receives the benefits.

For instance, a nationwide biogas programme aims to reduce the consumption of firewood, thereby preserving forest and inducing the cascade effects of checking soil erosion and lowering of water table, and eventually leading to increase in productivity of the land. All these effects are benefits to the society and should be taken as such in a complete economic analysis. In financial analysis, however, these are not usually considered because from a biogas plant owner's perspective, it is actual cash returns that matters, be it in the form of savings or income. Even if economic analysis indicates high returns to the society, the system will not appeal to individual or community ownership if financial returns are low.

Identifying costs and benefits

Costs and benefits can be identified in the same manner as described in the previous section. There are a few important exceptions, though. In financial analysis, market prices are always used, whereas in economic analysis, "Shadow prices" are used to reflect real social and economic values for goods, services and discount rates.

Artificial prices of commodities may be a result of many factors - price control, low foreign exchange rates in developing countries that unrealistically elevate the purchassing power of their currencies, insufficient or incorrect information, etc. The time value of the commodity or shadow price is one that would exist under "free competition in a free market". In practice, however, estimation of shadow price is often open to controversy. Still a few guidelines can be offered. Where the domestic market is protected world market prices can be used instead of domestic prices.

In shadow pricing labour, it can be considered as the cost to the society for transfering labour from its usual occupation to the project. If labour is short, the shadow wage can be taken as the market wage. If a labourer is unemployed nothing is lost by the society by transfering him to work in the project and the shadow wage is zero. In most cases where unskilled labourers are involved, they are probably under-employed already and their shadow wage may range from zero (no employment available) to say half of the market wage. Skilled labour can be taken at their market price since full employment is likely.

In economic analysis, all transfer payment such as taxes are not considered as costs (or benefits). Subsidies must also be excluded and the price adjusted to reflect the true cost. Costs are also incurred from any extension services run by the government or development agencies for promotion of the product involved. These costs may not affect the private investor and can be neglected in financial analysis, but they represent additional burden to the society and should be considered in economic analysis.

Secondary costs and benefits

Besides its primary functions, a project may have indirect effects on the society and the people involved in it. These indirect effects or secondary effects are often elusive and difficult to quantify. One illustration is the installation of a biogas system for hulling rice. The rate of hulling by an engine run on a biogas-diesel mixture is much faster than the traditional method, and what used to be hard work for village women is now taken over by machines run by men.

The women now have more time for leisure or other income-earning activities (secondary benefits). On the other hand, hulling may polish the rice to such an extent that most of the vitamins and proteins are lost - a nutrition problem for the society (secondary cost).

In developing countries where unemployment and under-employment persist, a new project creates jobs thereby increasing purchasing power of the people. As they spend their income, more jobs are created and the chain effect of employment creation ensues. Other secondary benefits are less obvious. Once villagers are involved in development projects, they may be more open to innovations (or opposite if they have had bad experience with the development project). They become "progressive", more willing to learn, and will attempt to attain a better life for themselves and for their children. The project itself may provide opportunities for training of the local people, for better utilization of rural resources, whether material or human.

Besides reducing consumption of firewood and possibly deforestation, a biogas system produces many other secondary benefits. Women are released from the time - consuming chore of collecting firewood. Cooking is easier and cleaner - no more polluting fumes from firewood; no more soot covered pots and pans. Healthwise and time-wise, a biogas system appears to improve life for a rural woman. If nightsoil is used as feed for the gas plant, there is the additional benefit of treating a health hazard, and at the same time it is converted to a valuable fertilizer.

For a project that involves a community, success can promote cohesiveness and further cooperation. Taking part in a development project and demonstration of the effects can confer prestige and dignity to people, a factor impossible to measure but which nonetheless plays a vital role in motivation. As shown in these illustrations, secondary effects are complex and usually defy quantification. However, they represent real costs and benefits, and as far as possible important effects should be identified and quantified and treated in economic analysis. In financial analysis, their inclusion is not necessary.

1.5 Sensitivity Analysis

When evaluating a proposal or a set of proposed options, one has to make assumptions and predictions. Since all estimates are subject to uncertainity, a decision can be made more sensibly if sensitivity analysis is applied.

162

Sensitivity analysis is simply making probable changes in estimates of elements such as fuel cost, labour, and maintenance to see how much the measures of project worth are affected. If a certain element can take on a wide range of values without affecting the outcome appreciably, the outcome is regarded as insensitive to uncertainties of that particular element. If however even a small change in the estimate of an element alters the outcome significantly, the outcome is regarded as sensitive to changes of that element. The application of sensitivity analysis is demonstrated in the following sections for various biogas systems.

SECTION 2: ANALYSIS OF VARIOUS BIOGAS SYSTEMS

2.1 Financial Analysis for a domestic biogas plant

So far, the most common application of biogas in Nepal is still domestic - for cooking and lighting. Biogas replaces the traditional fuel such as firwood for cooking and kerosene for lighting; the savings on these fuels are to be counted as 'benefits'.

Measuring Costs and Benefits

Measuring costs is straight-forward and the breakdown is given in table 1.1. In measuring benefits, the most crucial factor lies in the availability of biogas throughout the year. The gas replaces its equivalent of fuel, the price of which can be obtained readily from the market.

First, prediction must be made on the quantity of gas available in different seasons of the year. Based on field data (Lau-Wong, 1984), the following prediction can be made for lower hilly regions below 1300m.

Season	Digester temp. °C	Daily gas production m^3(STP)
Summer, 91 days	30	2.97
Rest of the year, 274 days	25	2.06

using composting etc.

Gas available per year = 2.06x274+2.97x91 = 834.7m^3(STP)
911.1m^3(25°C)

When gas is insufficient in the cooler months, preference is usually given to cooking. Based on the calorific values and efficiencies of firewood, kerosene, and biogas, the benefits on savings is estimated (Table 1.2).

In enumerating the benefits of biogas, the value of effluent as fertilizer has often been emphasised. However, one must note that dung has a value itself and can be used as fertilizer if not fed to the gas plant. Although the form and concentration of nitrogen (basic nutrient for crop) are altered, its total quantity is basically unchanged. Proper field trials should still be conducted for comparisons; but for the purpose of this analysis, one can assume that the cost of dung as fuel or fertilizer and the benefit of effluent as fertilizer cancel each other out.

Salvage value is almost nil since the plant is basically brickwork underground.

Computation

Having determined the total costs and benefits, the next step is to choose a discount rate: 15% is normally used for Nepal where the present bank fixed-deposit interest rate is around 13%. Given the discount rate, the discount factor for each year can be easily obtained from Discounting Tables (Gittenger, 1973). The present worth of costs and benefits are then computed for each year by multiplying the cost or benefit of that year by the corresponding discount factor. They are then summed up over the project life to give the total worths of costs or benefits.

Using the Butwal (Terai) firewood price of 0.6 NRs/kg, the benefitcost ratio and the net present worth are calculated and shown below Table 1.3 To find the internal rate of return, trial and error method must be used. At a rate of 14%, the total present worth is 149 NRs, but at 15% it becomes - 126NRs. Therefore the internal rate of return, to the nearest percentage, is 15%, which happens to be the same as the discount rate. Firewood price varies from0.25 to 0.45 NRs/kg in the hills, with a weighted average of 0.36 NRs/kg (Campbell, 1983). If we use this average value, the internal rate of return comes out to be only 3%.

DISCUSSION

The market price of firewood varies considerably in different locality in Nepal and has risen much in the last few years. At a Butwal (Terai) firewood price of 0.6 NRs/kg, the benefit -cost ratio is almost 1 and the internal rate of return is 15%. But using the hill average price of 0.36 NRs/kg, the benefit-cost ratio (0.73) is below 1 and the net present worth is negative, indicating that a domestic plant is not worth installing. The internal rate of return is only 3%, much less than the 15% discount rate; the farmer can get higher return by investing his money elsewhere, eg. by putting it in a bank which gives at least 13% interest. The firewood price of 0.6 NRs/kg seems to be the cut-off point; any price falling below this would make a domestic plant unattractive.

At 0.6 NRs/kg, firewood is still a cheaper source of fuel than kerosene, the former being 0.93 NRs/1000 kcal (effective) and the latter 1.12 NRs/1000 kcal (effective). In doing financial analysis in different locations, therefore, the price of the cheapest or most commonly used fuel should be sought and applied.

166

The discount rate chosen should also reflect the local condition. If it is higher than 15%, the benefit-cost ratio and the net present worth will be reduced making the project less attractive. Note that the internal rate of return is still the same, unaffected by the discount rate chosen.

Besides the price of fuel, the other sensitive factor affecting the project's benefit is gas availability. Since temperature-drop in winter can reduce gas production drastically (40 to 60% reduction for a 10°C drop), the benefits correspondingly decrease as well. Care should therefore be taken to get realistic estimates of gas production before proceeding with the analysis.

2.2 Financial analysis of domestic plant with credit

Since the installation of a self-financed domestic plant is financially unattractive in the hills, let us now examine the impact of credit financing on the analysis.

Through the Agricultural Development Bank of Nepal (ADB/N), farmers can take loan at 11% interest repayable over 7 years. If he does that, the financial picture actually looks worse than if he installs it with his own money. At the hill firewood price of 0.36 NRs/kg, the benefit-cost ratio is still below 1 and the net present worth is negative, while the internal rate of return drops below 0! The reason for this is obvious: the interest rate is simply too high. Until a year ago, the interest rate used to be 6%. If interest free loan is given, the benefit cost ratio is almost 1 and the internal rate of return is 12% (TAble 1.4), making the biogas intallation more reasonable.

Now consider the case when subsidy is available for hill installation. At 41% subsidy, the benefit-cost ratio is 1 and the internal rate of return 15%, the cut-off rate.

These results are significant for the formulation of strategy for biogas development and promotion. Installation and material costs should be reduced or subsidised (both amounting to the same thing). Without subsidy, the present interest rate on loan is too high; interest-free loan would definitely make the system more attractive. However, to get subsidy or low interest loan from the government or donar agencies, they must first be convinced of the intrinsic value of the system, since subsidy and loan are expenses to the society afterall.

An economic analysis will therefore be performed in Section 2.5.

2.3 Financial Analysis of income generating milling system comparison of biogas and diesel

Diesel run engine is a popular device for rice hulling and flour milling for small local entrepreneurs . Adapted engines are available commercially from India to take a fuel mixture of biogas and diesel or just diesel alone. If the owner has enough animals, he can have a biogas plant installed and save an appreciable quantity of diesel besides having gas for cooking. However, the high capital costs of a biogas plant may make this option less attractive. In the following analysis, an attempt is made to compare the financial attractiveness of the two mutually exclusive alternatives: milling using a biogas system or an exclusively diesel system.

Gross income for mill

Let us consider the case of using biogas from a steel drum plant (nominal gas production: $14m^3$) for milling. To get a fair idea of what a typical mill will earn, data on expenses and income have been collected from two such systems in Bhaluwe and Tribhuligarh, both in the Terai of Nepal. For fear of taxation, owners tend to overstate expenses and understate income. Direct questioning usually draws farfetched answers. To get more reliable information, cross checking and indirect questioning from different approaches are often needed.

The quantity and type of grain brought to the mill depend on the season. Business for a typical year is shown in Table 1.5. The gross income for a diesel or a biogas/diesel system is 18,240 NRs.

Fuel requirement

Using diesel alone, the fuel requirement is 0,2 l/HP, hr. With biogas, diesel is still needed for ignition, but as much as 80°/o is saved being replaced by biogas (0.43^3m^3/HP, hr)- a claim made by Kirloskar engine manufacturers. However, in almost all occasions we encountered, engine operators never opened the gas valves fully. Measurements at Bhaluwe indicated that only about 0.12m³ of biogas was used per HP per hour; in other words, the engine was run on 40°/o biogas. Their reasons for doing so are obscure; probably they feel that the engine runs better and the gas lasts longer. Any gas remaining can be used for cooking or lighting which is a financially sound option for a large gas plants, though not for small domestic plants as previous anlycis showed.

The fuel requirements for both diesel and biogas/diesel systems are shown in Tables 1.6 and 1.7.

Cost and Benefits

Costs and benefits for both systems are shown in Tables 1.8 and 1.9. The additional benefit of a biogas system is the availability of gas for cooking and lighting, especially during the months of August to October when business is slack.

Savings on kerosene can be calculated from Table 1.6. Since 1.87m^3 gas (25°C) is equivalent to litre of kerosene (at 5 NRs/R), and 0.26 7m^3 gas to 1 kg of firewood (at 0.6 NRs/kg) (Table 1.1). The saving on kerosene is

$$2.8 \text{ m}^3/\text{day} \times 90 \text{ days} \div 1.87 \text{ m}^3/\text{l} \times 5 \text{ NRs/l}$$
$$= 675 \text{ NRs}$$

The savings on firewood = $(3.2 \times 120 + 90) \div 0.267 \times 0.6$
= 2481 NRs.

Therefore, total savings on fuel = 675 + 2481 = 3156 Rs and total benefits for a biogas milling system is

18,240 + 3156 = 21396 NRs.

While that of a diesel system remains to be 18,240 NRs.

Sensitivity analysis and discussion

At a discount rate of 15%, both biogas and diesel systems for hulling and milling are acceptable -- with benefit-cost ratio greater than 1 and net present worth positive. If the biogas system is community owned, a 50% subsidy can be obtained from the Agricultural Development Bank, Nepal, for the biogas plant, thus making this option more competitive.

The financial returns, as would be expected, are extremely sensitive to the amount of grain brought in for hulling and milling. For the period following harvest, the mill would be definitely busier than the period before harvest. Unless facilities are erected for storing grain, the mill owner has to be content with fluctuating business. Since storage facilities incur extra costs and purchasing of a stock of grain requires capital, these investments are usually only made in bigger enterprises.

Before installing a rice and flour mill, it is therefore essential to survey the market first to see if potential business is enough to bring the desired returns.

How efficiently diesel is used is another critical factor affecting the economics of both systems. The mill operator usually waits until several customers have arrived before starting the engine, so that idling time of the engine is minimised.

When presented with the alternatives of a biogas milling system and a diesel one, which is more appealing to investors? To make a realistic comparison, one must realize that there are two sensitive factors affecting the returns in the biogas system - the daily gas production and the market price of firewood. Normally if the digester temperature can be maintained at 28°C with heat exchanging device, there should be enough gas for rice hulling and flour milling with excess for cooking as well. However, low winter temperature coupled with mismanagement of the heat exchanging system (such instances have unfortunately occured) can reduce gas production to such an extent that the mill has to be run solely on diesel for part of the time.

The other sensitive element in the comparison is the market price of firewood.

In villages, prices can vary from 0.25 NRs/kg to 0.45 NRs/kg, with a weighted hill average of 0.36 NRs/kg (Campbell, 1983), while in cities the prices are even higher. Using the Butwal price of 0.6 NRs/kg, the internal rate of return of the biogas milling system is the same as that of a diesel system (21%); however the biogas system may be preferred since the net present worth is 6320 NRs more. The price of 0.3 NRs /kg fuelwood is the cut-off point when both systems give the same net present worth. A wood price above that would make a biogas milling system more attractive than a diesel one.

Introduction of subsidy or loan (even at 11% interest) for biogas would definitely make such system more favourable. As long as the firewood price is high and digester temperature is favourable, a biogas milling system is as good as a diesel milling system. In the event of shortfall of diesel, a biogas milling system will be more appropriate, and since diesel is an import, savings on foreign exchange on import of diesel will be a benefit to the society.

2.4 Financial analysis of a biogas irrigation system - and its comparison with a diesel one

A community biogas plant for irrigation has just been installed in Madhubasa, a Magar village in the Terai (CH. 17.) Here, water for irrigation has been a continuous problem. Despite constructing and joining an additional well to an existing well, the water delivery rate plummets from 10 l/s during the monsoon to 3 l/s in the hot dry season.

This sets the limit for the land area that canbe irrigated. To determine this and the water and pumping requirements, the initial step is to calculate the evapotranspiration losses for eac crop. The calculations are summarised in Table 1.10.

In the past when irrigation was non-existent, only one main crop -- paddy -- was grown. With irrigation, another crop such as wheat can be grown in winter. Dividing the water available (520m^3 / day) by the peak water demand (21. 4mm/day), the irrigated land area for paddy comes out to be 3.6 bigha or 2.4 ha. Similarly for the winter wheat crop, the area is 9.6 ha. Note that shortage of biogas for running the engine would not be a limiting factor for determining irrigated land area, since the villagers will resort to running the engine on diesel alone.

If the villagers are extra careful in the use of water, more land area can be irrigated. At this point it is difficult to predict the water application efficiency and a 65% value is assumed, 70% being a high value.

Benefits

Table 1.13 gives the extra gross profit from the two crops -- paddy and wheat. Note that for paddy extra profit is obtained from the difference of the irrigated and rainfed crop.

The villagers plan to use any excess biogas for lighting ten lamps. The savings on kerosene per day for the two growing seasons are given in Table 1.10. For the rest of the year, gas is sufficient for lighting 10 lamps 7 hours daily. Annually, this is equivalent to 4968 NRs when expressed in terms of savings on kerosene.

Discussion of results

A biogas irrigation system yields high benefit-cost ratio of 1.43 and an internal rate of return greater than 50% at 50% subsidy. Even without subsidy, the internal rate of return is greater than50%, indicating that installation of the

system is worthwhile. An irrigation system run on diesel was analysed in the same manner. The results are summarised in Table 1.14.

Without subsidy, biogas systemwhich gives the additional benefit of lighting appears less attractive than a diesel system since it has a lower net present worth. With 50% subsidy, however, the picture for biogas looks much brighter. In fact, with only 6% subsidy a biogas system would give the same net present worth as a diesel system. The subsidy may very well worth it since utilization of biogas reduces reliance of the country on the import of diesel.

Now that both systems are shown to be acceptable, a loan borrowed for financing the costs would only make them more attractive to investors, even at 11% interest (over a period of 7 years) which is the current rate for agricultural loans.

Since most of the profit come from the wheat crop. The analysis is sensitive to the yield of wheat. A yield of 2 t/ha instead of 2.5 t/ha would bring the internal rate of return of a biogas system down from over 50% if no subsidy is given, while that for a diesel system still remains above 50%. The economics is extremely sensitive to the actual area irrigated as well. The cropping pattern should therefore be adjusted to optimize the use of water.

4.5 Economic analysis of domestic biogas system

As previous analysis indicates, a domestic biogas system for cooking and lighting is financially unattractive in the hills unless subsidised. Since resources for subsidy are derived ultimately from the society itself, the socio-economic benefits should be weighed against thecosts of the system in an econmic analysis.

Costs and Benefits

Costs are identified as in the case for financial analysis exceptwhen shadow prices are used (Table 1.11).

Quantification of the socio-economic benefits, on the other hand, is extremely difficult if not impossible. The most obvious benefit often quoted in literature is the prevention of deforestation. But to what extent? Theoretically, the benefit would be equivalent to the economic value of the amount of firewood a biogas system can save. This value is probably reflected in the cost of deforestation to the society as shown below. So far the damage done by deforestation has not been successfully quantified in monetary terms.

1) Loss of top soil

Land erosion, a serious problem in Nepal, normally takes the form of top soil and nutrient less; sometimes whole chunks of land are removed. It is the consequence of natural as well as human causes; deforestation caused by inexorable demands for fodder and fuelwood is only but one of the culprits. Unrestrained defoliation by the high livestock population, overgrazing of pastures, chopping trees for fuelwood, land clearance for cultivation, human settlement or roads are all damaging forces working together, accentuating the problem. Since these causative factors of soil erosion are neither independent nor additive, it is impossible to isolate the portion contributed by deforestation through excessive cutting of fuelwood even though a value can be assigned to the loss of land or nutrient. Moreover, the effect of deforestation is not only erosion; loss of forest cover can affect rainfall and lower the water table as well. Thus, it is infeasible to quantify the cost of deforestation from fuelwood cutting as loss of top soil.

2) Decrease in land productivity

Another approach is to equate the cost with decrease in crop yield caused by depletion of nutrients and top soil (Steven, n.d.). Over the last 20 years Nepal has been suffering a decline in crop production. (Agri. Stat. Di.). Since soil erosion caused by deforestation induces damages other than declining crop yield, and the latter is a result of not only erosion but other factors such as lack of agricultural inputs, this approach will fail to give a reliable estimate of the cost of deforestation.

3) Market price

The market price of firewood which has soared in the last decade varies with locality. The price probably reflects well the demand and supply of that area but is far from representing the true cost of deforestation. If forest is accessible, the price if any, will be unrealistically low.

4) Cost of afforestation

What value should then be assigned to fuelwood? Since the cost of deforestation to the society is beyond quantification, a different approach is to assign value based on the cost for afforestation.

Studies revealed a decline in forest area from 6.4 million ha in 1964 to 4.1 mha in 1980. Later estimate showed a reduction of more than 700,000 ha between 1975 and 1980, an average loss of 14,000 ha forest annually (National Planning Commission). Targets have been set in the Sixth Plan (1980/81-85/36/) to afforest a total of 71,427 ha, which comprises both new plantations and protected forests. The investment on new forests is US$360 or 5040NRs per hactare (Asian Dev. Bank, 1982).

Now between the time of investment and the first harvest of fuelwood, there is obviously a time lag depending on the species of tree planted and the climate. If the lag time is taken to be 5 years and discount rate 15%, the worth of the investment at the <u>first</u>year of harvest would be 1.15^5x investment = 2 x 5040 NRs/ha = 10080 NRs/ha. Since from the first year onwards there will be harvest of wood <u>every</u> year, this value of 10080NRs/ha is equivalent to an installment of 1511 NRs/ha (10080 ÷ 6.67) every year fromthe first year to infinity. The dividing factor 6.67 is actually the compound interest factor at 15% (the discount rate used here) and can be readily obtained from Compound Interest Tables (Gittenger, 1973). Given the annual productivity of the forest, the afforestation cost per kg of fuelwood can then be determined. A conservative annual yield of $5m^3$ (2750kg)/ha leads to a cost of 0.55NRs/kg fuelwood (1511÷ 2750), and a domestic plant saving 2380kg fuelwood (see Sec. 11.3) will accrue a benefit of 1309NRs per year.

If an annual yield of $10m^3$ fuelwood/ha is attained, the benefit accrued will be 655 NRs per year.

<u>Other indirect benefits</u>

The secondary benefits of a biogas system are described in Sec1.4. From data in 'The Status of Womenin Nepal', man and women in a household share the workload for fuel collection, both spending about equal time of 1/2 hr daily. Women do most of the cooking and dish-cloaning, 1 to 1 1/2 hr daily. In this analysis, it is assumed that 1 hr is saved from the elimination of wood collection and 1/2 hr for cooking when biogas is used.

Another secondary benefit is the elimination of smoke pollution from wood stoves. Although women do almost all the cooking and are more prone to eye and lung irritation, the expenses in health care do not necessarily run higher since these problems are usually left unattended.

Their vitality might be decreased, though, with less work output, but this again is hard to measure. Smoke from burning firewood, on the other hand, has been reported to have some value afterall -- it kept out insects that gnawed into the wooden beams of ceilings. However, an attempt is made here to include the more significant entities (Table 1.11).

Discussion of results

In the above analysis, the benefits of a biogas plant in terms of savings on firewood is measured by means of the cost of afforestation to the society. With an annual productivity of $10m^3$/ha for afforested land, the benefit-cost ratio is below 1 and the internal rate of return only 9%. But with a lower productivity, say $5m^3$/ha, these values jump to 1.19 and 23% respectively. This big difference shows how sensitive the outcome is to the actual productivity of forest land. In fact, an annual yield of $7m^3$ /ha will bring the cost of firewood to 0.39 Rs/kg and the benefit-cost ratio to 1. These results have important implications. If forest productivity can be maintained above $7m^3$/ha, which is a target not difficult to achieve, afforestation scheme would cost less to the society than biogas systems. The benefit from afforestation will be even greater if the lag period can be decreased by planting fast-growing species. However, one must bear in mind that this analysis for biogas uses the cost of afforestation and not the true cost of deforestation itself, which can be tremendous if damages caused by landslides and floods (not only in Nepal, but also in India and Bangladesh) are included. If that is the case, domestic biogas systems may very well have high enough socio-economic returns to guarantee its place in the development of renewable resources.

It should be pointed out that in afforestation there is an inevitable lag betweenthe time of investment and the beginning of harvest, whereas for biogas the effects are immediate. Probably the best strategy is to implement both programmes simultaneously provided that resources are available. Theoretically, the livestock population in Nepal can provide enough feedstock for one small domestic plant per household. The distribution of animals unfortunately does not permit that. If however, gas plants are installed for families that possess enough animals, there will be less competition for firewood with the less well-off villagers, and depleted forest in the locality will recover more rapidly.

175

TABLES

Table 1.1: Capital and recurring costs for a domestic plant (dome type CP 10)

Capital cost	NRs
Plant installation plus accessories	10,246
Annual Recurring costs	
Labour for operation (1/2 hour/day at 1 NRs/hr) - hauling water, mixing slurry, etc.	183
Repair and maintenance (2 gas taps or gas valves and parts for lamps) *1	150
Compost or straw insulation for winter, plus plastic for passive solar heating of effluent	100
Total	433

Note: *1 The government minimum wage is now 10. 40 NRs/day or 1.30 NRs/hr, since plant owner may be operating plant himself or use existing help, no extra labour will be hired and financially will cost him less.

*2 In the first year after installation, Gobar Gas Company provides full guarantee, therefore repair and maintenance should be excluded from the first year's costs.

Table 1.2: Savings on Fuel

Fuel	(A) Calorific value	(B) Efficiency	(C) Quantity of fuel/yr.	(D) Efficient k.cal/yr.
Biogas (54% CH_4)	4628.6 kcal/m^3 (25°C)	52%	911.m^3(25°C)	2,192,901
Firewood	4300 kcal/kg	15%	2380 kg *1	1,535,031 (70% of biogas)
Kerosene	9000 kcal/1	50%	146 1 *1	657,870 (30% of biogas)

1.87m^3 gas (25°C) = 1 litre kerosene

0.27m^3 gas (25°C) = kg firewood

(C) = (D)/(A)x(B), assuming 70% of the gas replaced wood for cooking and 30% replaced kerosene for lighting.

Price of kerosene is 5NRs/1, savings/yr = 146 x 5 = 730 NRs

Price of firewood: 0.6NRs/kg (Butwal), savings = 2380 x 0.6 = 1428NRs.

0.36NRs/kg (hill), savings = 2380 x 0.36 = 857NRs.

Table 1.31 Financial Analysis - domestic dome type plant

(in constant 1983 NRs)

Year	Total Cost	Present Worth 15%	discount factor (d.f. for 15%	Total Bene-fit	present worth 15%	Incre-ment bene-fit or Cash flow	Present worth 14%	d.f. 14%	Present worth 15%	d.f. 15%
1983	10,529	9,160	.870	2,158		-8371	-7341	0.877	-7283	0.870
84	433		.756	2,158		1725				
85	433		.658	2,158		1725				
86	433	sum= 17 97	.572	2,158		1725	sum=	sum=	sum=	sum =
87	433		.497	2,158	Sum=10831	1725	7490	4.342	7157	4.149
88	433		.432	2,158		1725				
89	433		.376	2,158		1725				
90	433		.327	2,158		1725				
91	433		.284	2,158		1725				
92	433		.247	2,158		1725				
TOTAL		10,957	5.019	10,831			+149	5.219	-126	5.019

Benefit-cost ratio at 15% = 10,831/12,284 = 0.99

Net present worth at 15% = 10831 - 10,957= -126 Nrs

Internal rate of return = 15%

Table 1.4 Measures of the worth of domestic biogas plant with and without credit financing

Financing	benefit-cost ratio	net present worth, NRs	internal rate of return,%
(A) Firewood price =	0.6 NRs/kg (Butwal)		
without credit	0.99	-126	15
loan 11% 7 year	0.98	-256	11
(B) Firewood price =	0.36 N Rs/kg (hill average)		
without credit	0.73	-2992	3
loan 11% 7 year	0.72	-3121	below 0
interest-free loan	0.98	-168	12
subsidy 41%	1	0	15

Table 1.5

Typical Business for Mill

Month	No. of Months	No. of hrs. engine run per day	Quantity/ day Rice. muri	Wheat. pathi	Gros income per period, NRs.
Nov-Mar	5	4	15	8	10,200
Apr -Jul	4	4	12	10	6,960
Aug -Oct	3	1	1	8	1,080
				Total	18,240

Note: (1) 1 muri paddy is about 50 kg. Hulling charge is 4 NRs/muri and maximum hulling rate is 6 muri/hr.

(2) 1 pathi wheat is about 3.2 kg. Milling charge is 1 NRs/ pathi and maximum milling rate is 12 pathi/hr.

172

Table 1.6

Fuel Requirement for Biogas System

Mont	Diesel Required Liter per day	per period	Gas Required per day m^3	Gas left for Cooking m^3/day	Lighting m^3/day	Equivalent of Fuel wood kg	Kerosene litre
Nov - Mar	2.24	336.0	8.8	-	-	-	-
Apr - Jul	2.24	269.0	8.8	3.2	-	12	-
Aug - Oct	0.56	50.3	2.2	8.0	2.8	30	1.5
		655.3 (or 3604 NRs at 5.5 NRs/1)					

Note: The engine runs on 40% diesel and 60% biogas.
For a 7 H.P. engine the diesel requirement is
0.4 x 0.2x7 = 0.56 litre.hr.

Table 1.7

Fuel Requirement for Diesel System

Month	Diesel Required, litre per day	per period
November - March	5.6	840
April - July	5.6	672
August - October	1.4	126
Total		1638 (or 9010 NRs at 5.5 NRs/1)

Table 1.8

Biogas Systems - for Hulling and Milling

Capital Cost	NRs
Plant Installation plus accessories (dome type '500 cft')	37,515
7 H.P. dual fuel engine (Kirloskar)	10,500
Rice Huller plus accessories No. 8)	2,500
Flour mill Plus accessories 16 "	2,500
Heat exchanging device plus accessories and pump	1,500
Total	54,515

Annual Recurring Costs

Labour for plant operation (1 hr at 1 NRs/hr.) mixing slurry etc.	365
Labour for operating engine, huller and mill (350 NRs/Month, less during slack season)	3,500
Maintenance and repair (350 NRs for engine 950 NRs for huller, 850 NRs for mill running below 4-5 hr each day, 250 NRs for plant and heat exchanger)	2,250
Diesel	3,604
Mobil oil (2 l/month at 28 NRs/l)	672
	10,391

150

Table 1.8 (Contd...2)

Financial Analysis (in constant 1983 NRs)

Year	Total Cost	Present Worth 15%	Total Benefit	Present Worth 15%	Incre-ment Benefit	Present 20%	Worth 21%
1983	64,756*	56,338	21,396		-43,360	-42,735	-42,428
1984	10,391		21,396		11,005		
1985	10,391		21,396		11,005		
1986	10,391		21,396		11,005		
1987	10,391	Sum =	21,396	Sum =	11,005	Sum =	Sum =
1988	10,391	43,112	21,396	107,387	11,005	43,876	41,863
1989	10,391		21,396		11,005		
1990	10,391		21,396		11,005		
1991	10,391		21,396		11,005		
1992	10,391		21,396		11,005		
			1,000 (Salvage)	247	1,000	227	202
Total		99,450		107,634		1,009	-154

Note:* Maintenance and repair for gas plant (estimated 150 NRs) covered by installing company for the first year.

Benefit cost ratio at 15% = 1.08

Net present worth at 15% = 8184 NRs

Internal rate of return = 21%

Table 1.2

Financial Analysis for Diesel Hulling/Milling System

(In constant 1983 NRs)

Capital Costs	NRS
7 H.P. diesel engine	10,500
Rice huller plus accessories	2,500
Flour mill plus accessories	2,500
Total	15,500

Annual Recurring Costs	
Labour for operating engine, huller, and mill	3,500
Maintenance and repair	2,000
Diesel	9,010
Mobil oil (2 l/month at 28 NRs/l)	672
Total	15,182

Year	Total Cost 15%	Present Worth	Total Benefit	Present Worth 15%	Incre-ment Benefit	Present Worth 21%	Present Worth 22%
1983	30,219	26,693	18,240		-11,979	-9895	-9,823
1984	15,182		18,240		3,058		
1985	15,182		18,240				
1986	15,182		18,240				
1987	15,182	Sum =	18,240	Sum =		Sum =	Sum =
1988	15,182	62,990	18,240	91,547		9,868	9,492
1989	15,182		18,240				
1990	15,182		18,240				
1991	15,182		18,240				
1992	15,182		18,240				
			1,000	247	247	148	137
Total		89,683		94,805		121	- 194

Benefit cost ratio at 15% = 1.02

Net present worth at 15% = 1,864 NRs

Internal rate of return = 21%

Table1.10 Irrigation requirements by crops

Month	Rice growing season 5 *1	6	7	8	9	Wheat growing season 10 *1	11	12	1	2 *1
Co-efficient of transpiration, k	1,1	1,1	1.07	1,0	0.95	.28	.5	1.1	1.1	.25
% of daily day-time hour of year total, P	0.31	.32	.31	.30	.28	.26	.24	.23	.24	.25
Average temperature, °C*2	31.8	29.1	290	29.2	28.3	26.3	21.8	16.3	6.2	17.2
Average rainfall, mm*2	23	433	425	353	218	28	-	-	1	19
CALCULATIONS FOR GROSS IRRIGATION WATER REQUIREMENT (GI)										
1) Evapotranspiration, E*3 mm/ month	231	226	212	192	168	44	64	118	122	30
2) Percolation loss (7mm/ day) mm/month	210	210	210	210	210	-	-	-	-	-
3) Effective rainfall mm	23	360	345	200	145	-	-	-	1	12
Net irrigation (NI), = (1)+(2)+(3), mm/month	418	76	77	203	233	26	64	118	121	18
Gross irrigation mm/month	643	117	118	312	358	40	98	182	186	28
(GI=NI÷65% efficiency) mm/day	21.4	3.9	3.9	10.4	11.9	1.3	3.3	6.1	6.2	0.9
PUMPING REQUIREMENTS										
Water pumped/day, m^3 *4	523	104	104	260	296	135	327	596	605	96
Pumping time/day, hr*5	11.2	2.2	2.2	5.6	6.3	2.9	7.0	12.7	12.9	2.1
Biogas Production/day, m^3*6	14.5	14.5	14.5	14.5	14.5	8.5	8.5	8.5	8.5	8.5
Pumping with biogas/diesel, hr *7	6.9	2.2	2.2	5.6	6.3	2.9	4.0	4.0	4.0	2.1
Pumping with diesel alone, hr	4.3	-	-	-	-	-	3	8.7	8.9	-
Biogas in excess, m /day*8	-	9.9	9.9	2.7	1.3	2.4	-	-	-	4.1
Diesel required, l/day*8	6	0.55	0.55	1.4	1.6	0.73	4	9.7	9.9	0.53
Lighting (0.142/light, hr) light-hr day	-	70	70	19	9	17	-	-	-	29
Replacement of kerosene for lighting, l.	-	5.3	5.3	1.4	0.7	1.3	-	-	-	2.2

Notes:

1. for wheat half-month; for rice 10 days including water for land preparation and nursery.
2. Climatic date for Janakpur (Sharma, 1974)
3. Blaney Criddle method = E = K x p (0.46 T+8) x30 mm/month; T in ^{o}C
4. Water pumping requirement/day = irrigated area (ha) x GI (mm/day) x10m^3 plus 10m^3 for village consumption. Irrigated area is 2.4 ha for rice and 9.6 ha for wheat.
5. Pumping capacity of 13 l/s or 46.8m^3/hr
   Pumping time/day = water pumped/day ÷ 46.8
6. In the Terai, digestor temperature in the summer can reach 30°C and in winter, with insulation and solar heating of influent, a temperature of 25°C is attainable (since gas plant is a long distance from the engine, heat exchanging is impossible). With 300 kg gobar and retention time of 74 days, the corresponding gas productions are 8.5m^5 and 14.5m^3.
7. With the engine consuming 0.42m^3 biogas/HP, hr, maximum pumping with biogas is feasible for (gas production/0.42x5) hour per day.
8. 5HP engine running on biogas/ diesel mixture requires 0.25 l diesel/hr and on diesel alone requires 1 l/hr.

184

Table 1:11: Costs for a biogas irrigation system

Capital Costs	NRS With subsidy *1	Without subsidy
Gas Plant:		
Installation of plant plus appliances (including 2 lights)	18,758	37,515
8 lights (350 NRs/ light)	1,400	2,800
Piping for lights (200m at 18 NRs/m)	1,800	3,600
Irrigation system:		
5 H.P. engine plus pump set	10,500	
Engine house	5,000	
Water tank	800	
	38,258	60,215
Annual recurring costs		
Maintenance for engine and plant: installation etc.	2,000	
Diesel (183 l for rice, 727 l for wheat, at 5.5NRS/l)	5,005	
Mobil oil (2 l/ month at 28 NRs/l)	672	
Labour for irrigation (60 hr for rice, 1053 hr for wheat; 2 persons at 1NRs/man-hr)	3,308	
Labour for gas plant operations (1½ hr/day at 1 NRs/hr)	548	
Seed	1,766	
Chemical fertilizer	8,707	
Extra labour for paddy and wheat crop (Table 11.13)	6,768	
TOTAL	28,774	

Note:

* 50% subsidy, except for farmers' labour and irrigation system

185

Table 1.12: Input requirement for rice and wheat crop

	Seed requirement			Fertilizer requirement		Irrigated crop	
					*2	Labour	Extra labour required
	kg/ha	NRS/kg	NRS/crop	NRS/ha	NRS/crop	NRS/ha	NRS/crop
paddy*1	50	2.00	240	572	1373	950	240*3
wheat*1	50	3.18	1,526	764	7334	680	6528
			1,766		8707		6768

Note:

*1 = Irrigated paddy, 2.4 ha
Irrigated wheat, 9.6 ha

*2 = Source: Shibata San, 1980

*3 = Extra labour required for paddy crop/ha
= labour for irrigated crop (950NRs/ha) - labour for rainfed crop (850 NRs/ha)

Table 1.13: Gross Profit from extra crop yield

	Yield t/ha		Price	Irrigated area	Gross Profit
	Irrigated	rainfed	NRS/kg	ha	NRs/crop
Paddy	3.0	2.0	1.50	2.4	3,600
Wheat	2.5	-	1.80	9.6	43,200
					46,800

Table 1.14: Comparison of biogas irrigation systems run on biogas or on diesel alone

System	Benefit-cost ratio at 15% discount rate	Net present worth NRs	Internal rate of return, %
Biogas			
No subsidy	1.28	51,441	50
50%	1.43	70,543	50
Diesel	1.34	53,370	50

186

Table 1.15: Economic Analysis - Costs and benefits of a domestic biogas system

		NRs		
Capital Costs				
Plant installation plus appliances (including extension done by installing agency)		10,246		
Materials contributed by farmer (brick and sand)		805		
Labour contributed by farmer (shadow price, taken as half the unskilled labour wage)		360		
	Total	11,411		
Annual recurring costs				
Labour for operating plant (half the minimum wage: 0.5 hr/day x 365 x 1.30 NRs/hr x 0.5=119)		119		
Repair & maintenance		150		
Compost/insulation for winter etc.		100		
	Total	369		
Benefits				
Savings on labour - fuel collection, 1 hr/day at 0.65 Rs/hr		238		
- cooking and dish cleaning ½ hour/day at 0.65 Rs/hr		119		
Kerosene 146 l (5 Rs/l, the market price is used since it is not subsidised)		730		
			Wt. of wood	Wood cost (Rs/kg)
Firewood-afforestation estimate, yield 5m³/ha		1,309	2750	0.55
7m³/ha		932	3850	0.39
10m³/ha		655	5500	0.27

Afforestation yield, m³/ha	5	7	10
Benefit-cost ratio at 15%	1.19	1	0.86
Net present worth at 15%	1894	1	-1389
Internal rate of return,%	23	15	9

REFERENCE

Campbell J.G. (1983) People and Forests in Hill, Nepal.
Community Forestry, Ministry of Forestry, Kathmandu.

Gittinger J.P. Economic Analysis of Agricultural Projects.
(1972) The Johns Hopkins Univ. Press, Baltimore and London.

Gittinger J.P. (1973) Compounding and Discounting Tables for
Project Evaluation. Economic Development Inst.
of the International Bank for Reconstruction and
Development, Washington, U.S.A.

World Bank (1975) Agricultural Credit, Sectors Policy Paper,
World Bank, Washington D.D.

Lau-Wong, M. (1984) The Effect of Operational Parameters on System Dynamics.
From: Biogas — Challenge and Experience from Nepal. Co-author with
J. Finlay, D. Fulford, A. Bulmer. To be published by Intermediate
Technology Publications, London, U.K.

188

Chapter 12. A PRACTICAL GUIDE TO COMMUNITY BIOGAS A. Bulmer

The thrust for establishing community biogas plants has been to make biogas technology available to lower income groups of people. At present only the top 10% to 20% of farmers in Nepal have the resources to install a family sized plant for themselves. The ideal is that poorer people coming together will be able to match in money and livestock what the rich can provide on their own.

The application of this ideal has to be grounded in the reality of each situation and success depends on giving due weight and study to the words: "poor people coming together".

People

The people are the focus of our concern.

We should be people orientated: technology must not be allowed to dominate, but should be arranged to fit around the real needs of the people for whom it is intended, at a level at which they are able to understand and cope with.

We should be realistic: people want to go their own way, but they may be willing to work together for one activity, if they profit from it.

There have been few examples of successful community biogas projects. There may have been a lack of realism about the part self-interest plays in the lives of the poor. As an economic group, they have no greater willingness to cooperate than any other. Their willingness to take part in collective action, as opposed to the self-sufficient life-styles of the rich, is not based on any ideals, but on their proven experience that they can benefit by working together. So biogas technology must be presented in such a way that the people as individuals will benefit from the project individually, if they cooperate in it.

Community

A "community biogas project" is defined, for the purposes of this discussion, as "a cluster of individuals, whether urban or rural, who share in part ownership of a biogas installation".

There is a distinction between "group ownership", involving a self-selecting group of 4 to 10 people, and "village ownership", which implies that all the people in a village or local neighbourhood are involved (up to 100 people). In practice, group ownership seems to be more successful, but this discussion includes both patterns.

Questions Before a Plant is Planned

Why is our organisation involved in a community biogas project?

The motives of the implementing organisation and members must be considered. Is community biogas part of a larger programme? When rural development is "in fashion", community projects are often used to justify less fashionable work. Outside pressures from funding organisations, a desire for prestige or political advantage or the need to spend grant money before the end of the financial year, all can distort an otherwise well planned programme.

Are we setting up a community biogas programme in order to help ourselves or in order to help the people of the community?

Failures in community biogas projects often lie with the implementors, not the community or the technology. It is important to understand the pressures under which we are operating and not to allow them to distort our planning and implementation.

Are we willing to commit ourselves to the people of the community?

If we are involved in setting up a community biogas project, we must find the right community with which to work. This is a job that the implementors must do themselves. We must stay in the community for several nights, eat their food and accept their hospitality. If we are foreigners of a different culture to the villagers, from a different nation or tribe or caste, we must be prepared to become familiar with, and accept, the social and cultural traditions of the community in which we are to work. We must understand what the people are saying, their way of expressing themselves.

There is no substitute for time spent with people, meeting them informally, getting to know them, so that we cease to be "The Expert" from outside, but are seen as someone who cares and listens.

How will the Project be Financed?

Poor communities do not have the capital to pay for a community biogas plant. Therefore another organisation (not necessarily the implementors) must provide capital, as a loan, a direct subsidy or a mixture of the two.

The people of the community must have a financial commitment to the project. They must provide input to the construction of the plant, such as free labour for the digging of pits. They should take part of the cost as a loan, so they have a stake in the successful operation of the system.

A careful economic analysis must be made of the project. In Nepal, we recognise that biogas technology must be partially subsidised to be financially feasible. The level of the loan component depends on the ability of the people to pay back the loan, and this must be assessed. The project itself should generate an income that is sufficient to pay back the loan and also to give the people a useful profit.

Whatever approach is followed, it is vital that the decisions are made before meeting the people of the community. It will be one of the first questions that the people will ask, and they need a simple and direct answer (in writing if necessary). Misunderstandings must be avoided, such as reactions of "Oh, but we thought ....." and "But, when you first came, you said .....", in the future.

Who will provide the capital finance, for both loans and subsidy?

It is better for the implementors not to be responsible for providing finance, especially loan finance. National Agricultural Credit Schemes have plenty of experience with giving loans and collecting repayments and it is good to give the responsibility to them. Our energies should be directed into building a system that works and for which the people are happy to pay.

How will Technical Follow-up be Provided?

Assuming that the necessary expertise, designs, materials and transport facilities are available to build the plant, provision should also be made to follow-up and maintain the plant, once it has been built.

If technical failures occur, who provides, and pays for, repair?

In Nepal, a previous programme involved the building of 5 community plants. A year after the implementation, a survey was done (Bulmer 1980) which showed that one of the major causes of failure was inadequate maintenance provision. A community plant is more vulnerable than a family plant, as no one person is responsible for repair work. In the above cases, lights and cooking stoves were broken and the users tried to get them repaired, but the implementors of the project were unable to give an adequate response. In a short time the users lost interest in the system and it stopped operating.

Do we know of previous attempts to set up community biogas projects in or near our area?

We need to learn from other people's successes and failures; they are less expensive to us than our own. We should visit other community biogas plants, talk to the users and the implementors and read any reports they may have written. We may even need to make our own assessment and report on their work. Learning from others will warn us of any pitfalls to avoid and stop us making the same mistakes. It may even give us ideas that we had not thought of.

How is a Community Selected?

There are many factors to be taken into account when selecting a community with which to work. If a community has been recommended by someone else, a government official or a local politician, we must analyse their motives for the recommendation. We may be aiming to help a certain catagory of people, a particularly poor or disadvantaged group. We may have certain geographical or environmental aims, such as setting up a plant in an area of deforestation, to encourage the use of alternative cooking fuels to wood. Communication is a factor: do we want to be able to reach the community quickly and easily from a nearby town? This may distort our other aims, as the poorest people usually live in the least accessable areas.

Do we want to choose a community that has already shown a spirit of cooperation or one that has already expressed an interest in biogas technology? People who are already motivated are much easier to work with.

When the criteria have been established, we should contact people with good working experience of the area in which we intend to work, such as community health workers, agricultural extension agents, for their advice and suggestions,

Questions on Going to a Community

The number of people in a visiting team, and its composition by sex, age etc., can affect the initial impression the people of a community receive, depending on the local culture. An individual visitor may be less threatening than a team. The mode of transport (ranging from helicopter, through jeep to foot) also affects initial impressions. It may be better to leave a vehicle away from the village, so that the people's first sight of us is on-foot. The time of the visit is also a factor, people are more likely to talk and listen if they have no work to do.

Should someone introduce you to the people?

In some places, it is better to work through local political, development or even religious agencies, when contacting communities.

The initial contact will be formal; a time of explaining our purpose and discovering the possibilities. If the situation looks promising, then arrangements to return for a longer stay can be made. Facing a stranger, villagers will close ranks and only the influential ones will speak. In many places, the women will not even be visible. It may take several visits before the real feelings of everyone can be expressed.

Collecting Information

Much information is required to make a full and careful assessment of the feasibility of a biogas system for the community, and time and patience are required to gather it. Answers to questions should be written down, but the appearance of a notebook during conversations can make a villager wary. Information should always be cross-checked with another person; villagers do not always tell the truth about

themselves to outsiders. Answers about land holdings and income may reach the tax authorities. The local tea shop or the next door villages are places where alternative versions of a story may be found.

The core of the information should be:

Location	:	Postal Address; Map relating the village to the wider area; Relationship to local services, roads, government offices Map of Village.
People	:	Number of households; People in each household, by age and sex; Literacy.
Relationships	:	Family Lineage; Caste, tribal and linguistic links; Religious affiliations.
Economic	:	Occupations and typical incomes; Land holding; Ownership of capital goods.
Livestock	:	Type, number, sex and size; Daily quantity of dung available.

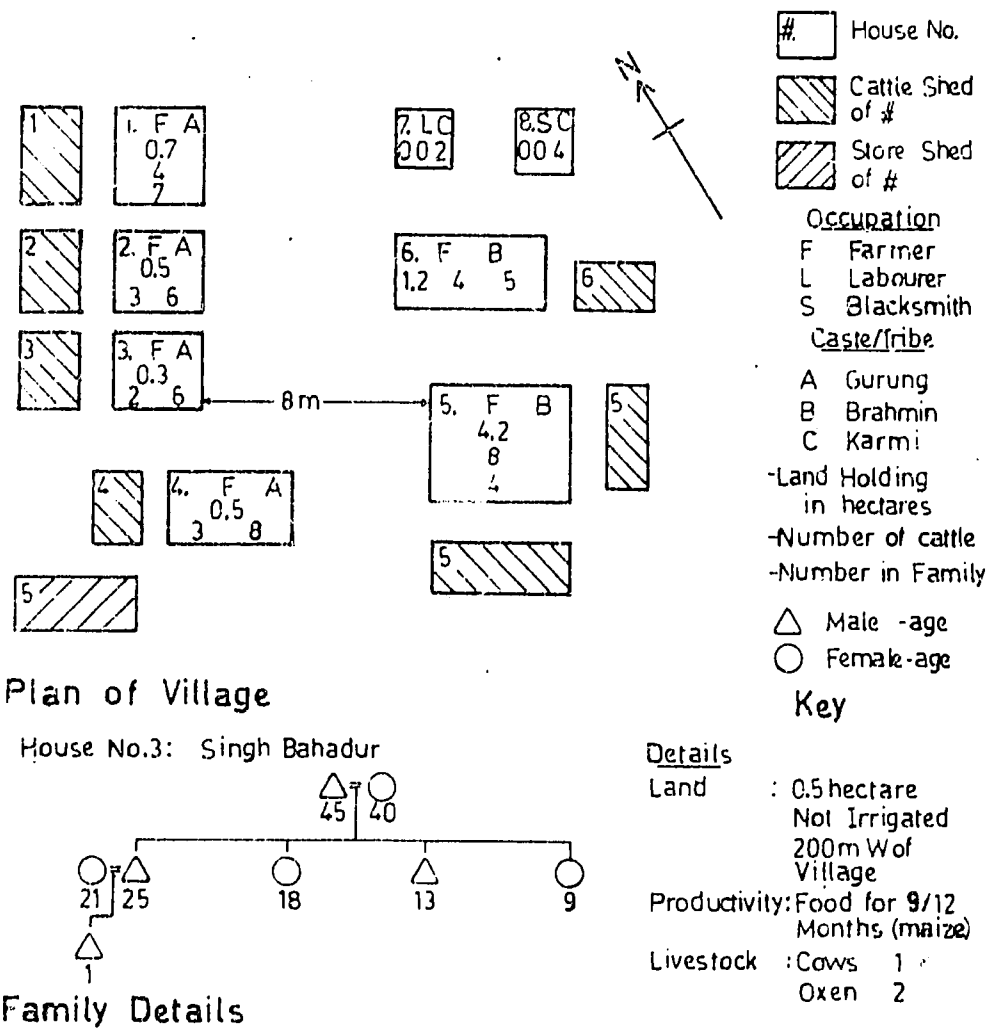

Figure 12.1 Presentation of Information from Sample Village.

The Political Dimension

The pattern of authority and decision making in the village is one of the most important items to information, but is the most difficult to assess. We are interested to know how the villagers are likely to cooperate together in the project.

We must find out:

Leadership	: Who the leaders are; What is the basis of authority: wealth, charisma, education, religious status?
Factions	: Under which leader do different villagers align themselves and for what reason?
Disputes	: What is the past history of court cases, land disagreements, family antagonisms, personality clashes?
Cooperation	: What have the villagers done together in the past, that demonstrates a spirit of togetherness?

A history of cooperative ventures is the most important sign for which to look: building a village well, making a road, running a local school, having a common grain store. The more telling ventures are those that require sustained effort: maintaining the road, paying a teacher's salary. Sharing together in religious festivals is an indicator, but a less significant one.

The Test

Now we have collected all the information on the community that we need. The villagers seem interested in the community biogas project, and we are hopeful that they are willing to cooperate on it. The next stage is the Test.

The Test is a principle in the methedology of 'The Village Reconstruction Organisation', run under the leadership of Michael Windey S.J., in Guntur, Andhra Pradesh, India. He sees it as an essential stage in any community development process, to determine the real commitment of the people to a project.

The people should be challanged to complete a specific task, within their capabilities. They could be told to repair an approach road, so that materials could be brought to the site, or to dig the first 2 m depth of the digester pit. They must organise this job among themselves and come to the office to tell us when they have finished. They must not be supervised during the test, it is a test of their ability to a job by themselves, and also that they have more than a polite interest in the project.

If the people come to a specified place to tell us that they have finished the task, then we can continue with the project. If they never come, then we should look for another community with which to work.

The Management Committee

If the community passes the test, the next stage is the management committee. It must have authority and be recognised by all the members of the community. The form it takes must be agreed by the villagers, with help from the implementor.

Who should be on this committee?
How committee members are chosen depends on the cultural assumptions of both the villagers and the implementor. It may be by democratic process or by consensus. The committee may include representatives of the less advantaged groups, such as women and the landless. It should have enough power to ensure that decisions concerning the project are made fairly.

We can point out to the villagers the areas in which cooperation is required and the likely points of contention, but they must decide on the measures required to meet these demands.

The frequency of meetings, the creation of posts of chairman, secretary, and treasurer and other committee matters must be decided by the villagers, with guidance from the implementor. Simple training may need to be given in taking minutes, doing accounts and running meetings.

Technical Aspects

The emphasis of this chapter is on the community, rather than on the technology. There is a big difference between community ownership and individual ownership of a biogas plant. The individual owner only needs to answer two socio-economic questions: "Have you enough cattle to feed a biogas plant?" and "Can you afford the price?".

How does biogas fit into the life of the community?

When the subject of biogas technology is explained to the villagers, they will need to know what they can use it for. Can biogas technology answer a need that the villagers already have? A supply of energy is a basic requirement for living, but the villagers must understand in detail how a biogas plant could make their own lives easier.

The different possibilities for the use of biogas should be explained to the villagers as clearly as possible. The use of pictures or a small model may help them to understand this new concept for them. If it is possible to take a group from the village to see other biogas installations, and especially other community biogas systems, they will grasp the possibilities more quickly.

The villagers must decide for themselves how they want to use the system, but they must be given as much information as possible, so they can make a meaningful decision.

The Uses of Biogas in the Community

Biogas has been traditionally used for cooking and lighting; domestic uses which save money, but do not earn an income. We believe that a new dimension can be introduced if the gas is used to earn an income for the villagers. The advantages of this approach focus on the areas where community biogas is most vulnerable: in the taking of responsibility for running and maintaining the system.

If a biogas plant is used to earn money, there is a stong incentive for all the people in the community to keep it running, to keep the money coming in.

If the gas is used for a single major purpose, such as running an engine, the people can concentrate their efforts on ensuring that this is maintained properly. If other equipment, such as lights, fail, the purpose of the plant is not lost.

Also this approach offers a means of reaching poorer communities. If the economic analysis has been done accurately and the correct subsidies are available, then poor people can repay the cost of a loan for the biogas plant from the income it generates.

In principle, there are many ways in which biogas can be used to earn money (see Chapter 8). In Nepal, there are only two ways that have been tested or studied in depth: grain milling and irrigation pumping.

The Use of Biogas for Milling in a Community

Several community plants have been set up in Nepal that use the biogas to run a dual-fuel engine to drive grain milling equipment. The joint owners of these systems seem to be happy with the profits that they earn. The income seems to be enough to cover the loan repayments for the whole system (most have received a 50% subsidy for the biogas plant).

How will a community mill be run and organised?

An operator is needed to look after the engine and milling equipment full-time: to maintain it, to ensure adequate stocks of fuel, oil and spare parts and to repair it if it breaks down. It is better to send a member of the village away for training in this work, if at all possible, than to employ an outsider.

Another person will be employed in organising the customers and taking payment for milling services (given in cash or in kind, a proportion of the grain being milled). This job may also be full-time and should be done by a member of the community whom others trust.

A third person should have the responsibility of checking the income each day and of keeping detailed accounts of earnings, expenses and profit.

It is important that all the members of the community feel confident that their interests are being protected. There are too many cases of cooperative ventures in which the treasurer has run away with the money. We must ensure that the management committee faces up to such matters at an early stage and makes proper arrangements to safeguard against misuse of funds. They should also ensure the security of community cash and grain.

The Use of Biogas for Community Irrigation

One community biogas system in Nepal has been set up to run an irrigation pump, but it has not been running long enough to confirm our economic assumptions: that they will make a good profit from the system.

The first question to be settled is: where is the water? Is there enough water throughout the year available from a nearby river, shallow well, bore hole, to make irrigation pumping an economic proposition? The implementor may need to ask help from irrigation engineers to answer this question.

The positions of: the source of water, the lands to be irrigated and the village and the cattle sheds, must all be considered in choosing a site for the plant. Often a source of water is away from both the village and the land. The water must be brought to the land along a suitable canal or pipe. If the biogas plant is near the pump-set, to which it is supplying gas, the cattle dung may have to be carried a long way each day. If the biogas plant is in the village, where security is better, then the biogas must be transferred to the engine. This can be done with a long pipeline of a suitable size (see Chapter 6), but pipelines are expensive. Biogas can be transferred in a large plastic balloon, but this is easily damaged.

The villagers must be presented with all the possibilities and the advantages and disadvantages of each, so they can make their own decision.

Will biogas used for irrigation pumping help all members of the community?

Irrigation will help those with land; the more land a person has, the more benefit he receives. We must help the management committee face up to these issues. If everyone in the community is to take part in the project, they must all receive some benefit from it.

A careful analysis should be made of people's land holdings and where each person's land is, in relation to the canal that will bring the water.

How will people who have no land, or whose land is not in the irrigated area, benefit from the project?

There are several ways in which this question can be answered. People can be each given 'credits' for the gas or the water, which they can

sell to others. An arrangement can be made where those who might not otherwise benefit may rent land in the irrigated area from others. It may be decided that those who will not benefit from the water should not take part in the scheme at all. These decisions must be made before the installation work is started.

An irrigation pump is only used when the crops need water, but the biogas plant is producing gas all the time. Should the gas be used for some other purpose, such as cooking and lighting aswell? If this is done, then gas will not be available for this other purpose during the irrigation season.

As with milling, an operator for the pump-set should be trained to run and maintain the equipment.

The Use of Biogas for Community Cooking and Lighting

Most individually owned biogas plants are used for domestic purposes, so community biogas plants are planned with domestic use of the gas in mind. Organisationally, this way of using the gas can be the most complicated.

Again, the villagers and the management committee must make many decisions before the plant is built. All the villagers in the scheme must have equal access to the gas. If the gas supply is limited, the use must be controlled. Some houses will be further away from the biogas plant than others, but they must not receive less gas.

Who has the responsibility for maintenance of the community facilities? for the individual family stoves and lights?

Maintenance people can be trained and supplied with tools and spare parts, but how will they be payed? Who pays for the spare parts?

The failure of cooking stoves and lights, without quick repair, is the quickest way to ensure a community effort fails.

Running the Biogas System

The villagers must make sure that effective arrangements are made to feed the plant with sufficient dung every day to produce the biogas required. The arrangements must be seen to be fair, Those who supply less dung may need to compensate in another way, such as giving labour. Someone must be responsible for ensuring that everyone gives as much as they have promised.

In some places cow dung is dried and used for burning. Are all the villagers convinced that putting the dung in the biogas plant is a better use for it? It is often difficult for people to change their habits.

Arrangements must also be made to share the slurry that comes out of the plant in a fair way. It can be dried and stored for future use as fertilizer, or it can be put into the irrigation water. Who benefits? The fairest system is that people should receive back, as slurry, what they put in, as dung. This may be difficult to do when putting slurry in the irrigation water. In this case, credits may need to be given for fertilizer, as well as gas.

The maintenance of the plant must be planned for. How will the cost of maintenance be covered? Who is responsible? The implementors must ensure that expert technical help is available, if it is needed, and that the people know how to find it.

Adding Latrines to Community Biogas

One benefit of a community biogas system is that latrines can be added, thus improving the sanitation of the village, and also the gas production from the plant. However, the introduction of latrines adds a further

set of complications, for which planning must be made by the villagers.

The defecating habits of the people need to be considered. The help of a woman, such as a community health nurse, is useful in this discussion with the people. The people need to be convinced that latrines will help them, by improving the health of the village. Again they must change their habits, and this is difficult.

If latrines are added to the plant, the siting of the biogas installation must be well planned. People demand privicy for using the toilet. The latrines must also be well planned, especially as there is a limit to the water that can be added, to give the correct total solids in the plant.

Some people feel that the use of night soil in a plant somehow 'taints' the gas for cooking.

Latrines need to be cleaned, but who will do it and how will they be compensated or paid? How will cleanliness be maintained?

One night-soil biogas plant has been built in Nepal, with 18 latrines, for an urban community as a sanitation measure. Many people used the facility, so it soon was overloaded. Cleaning the latrines became a problem, as poor quality gas was produced, so it could not be sold to pay the caretaker, as was planned. It has now been abandoned (Bulmer,1980).

Evaluation

Community biogas plants are complicated, and we need to learn as much as we can about setting them up. An evaluation of how each plant is working is not only valuable to the implementors, but also to others interested in this area of development. The more this type of information can be shared, the fewer failures we may have.

Chapter 13. BIOGAS EXTENSION **D. Fulford**

The extension of biogas technology to a large number of people in a developing country is a task that many planners have underestimated. There are extension programmes in several countries in Asia (Subramanian, Eggeling): Korea (30,000 plants in 1979), Taiwan (7,500 plants in 1975), Philippines (400), Thailand (200) and Pakistan (100) (Ellegård), but they have not always been as successful as the planners hoped. Even in China (7,000,000 digesters in 1978) and India (39,828 plants in 1980) (Ellegård), the failure rate of the plants built has been fairly high (up to 50% in China - Tam; 30% in India - Moulik).

Most of these extension programmes have been started by government agencies. The Indian programme, for example, is organised mainly by the Khadi and Village Industries Commission, a central government funded organisation set up to encourage rural development in India. Some of the state governments also have their own programmes, such as PRAD in Lucknow in Uttah Pradesh.

The Chinese experience has been slightly different, partly because of the way in which government is organised. The commune system is very involved in every aspect of people's lives, including government, so the idea of biogas technology was able to spread rapidly and people were able to obtain information and help easily. Although the collective system has facilitated the fast growth of biogas technology in China, the main driving force has been a new freedom for families to own things privately, including biogas plants and pigs (Thery).

In Nepal, the national biogas programme was launched by the Department of Agriculture of His Majesty's Government of Nepal (HMG/N) in 1975. The responsibility for continuing this programme lies with a private limited company, the Gobar Gas tatha Krisni Yantra Bikash (Pvt) Ltd., (the Gobar Gas Company). This company was set up by the Agricultural Development Bank of Nepal (ADB/N), the Fuel Corporation of Nepal and the United Mission to Nepal (UMN) in 1977. The organisation of the company was based on an extension programme started by DCS as part of the national effort (Fulford).

Organisation of Biogas Extension

Any extension programme has several components, all of which must be working effectively for the programme to succeed. The technology used in the extension programme must be well tested and proved before it is made available to large numbers of people. The technology must be sold to customers, who have to be convinced of its value and of their need to purchase it. A sales campaign should be linked to good publicity for the technology, via popular newspapers and radio. It is more difficult to persuade customers to purchase a technology of which they have never heard.

Few people in a developing country such as Nepal have capital available to buy a technology as expensive as biogas. Finance must be available to give customers loans to pay for their plants. An organisation is then required to recover loan repayments and interest from the customers; a job best done by a bank.

The technology must then be installed in the places where it is to be used. Staff must be trained in installation and also how to teach the customers to use the equipment and how to do simple routine maintenance. An essential feature of the programme in Nepal has been follow-up: regular visits to customers who have purchased biogas plants, to check on problems and to put them right.

A major component, which is sometimes neglected, is that of planning and management. Staff must be hired and trained, and money must be available to pay them, before it can be earned from work under the programme. Supplies must be purchased, stored and transported to the

different sites where biogas plants are being built. Close links need to be set up between the sales staff and customers and the loan officers and construction staff, to insure that the customer gets what he pays for, and pays for what he gets, in good time. Yearly plans must be realistic, taking into consideration potential markets, installation capacity, material supplies and bottle necks, transport problems etc., as well as the past year's achievements. Extension programmes often grow more slowly than planners forecast.

These various components have different demands. Good, well proven technology requires research and development, which is expensive and best organised and financed by national research or academic institutions or by international aid agencies. Research and development workers need good access to the work of field staff. Good publicity also requires national or central direction and organisation. Journalists and sales staff are better at publicity than researchers.

Loan finance is best provided by a national or regional bank, as it is specialised work and requires a good supply of funds, very good administration and a high degree of confidence, both from the local people and the government. If subsidies are to be given to cover part of the cost of biogas plants, as in some countries, they should be administered by government, although the banks can act as agents.

The work of selling to customers and of constructing biogas plants should be organised at a local level. Each area of a country has its own peculiarities and problems, that are best understood by the people of that area. This is especially true of technologies, such as biogas, that relate to rural areas, which are far more diverse than urban ones. If the construction programme is organised centrally, many different local offices are required, which is expensive to administer. If several different sales and construction teams are set up, which can act independently, but relate to the centre via a licencing system that ensures quality control, the administrative overheads can be reduced.

Follow-up should be organised centrally, especially as it should relate to the work of research and development. It is best done, though, by people who know a local area, such as by the construction or sales teams. These people may be reluctant to report failures caused by their own bad workmanship.

Thus the organisation of a biogas extension programme is very complex and may involve several very different types of organisation, such as: a university, a publicity agency, a bank, several small construction firms and a government department. The work of such diverse groups needs to be coordinated and monitored.

Planning an Extension Programme

Careful planning is an essential feature of any successful programme. The senior management and technical staff, who are to be responsible for running the programme, should be hired and trained before detailed plans are made. They should be involved in planning the programme they are to administer.

The aims of the programme must be stated clearly, in terms of measurable quantities: eg. the number of biogas plants built each year, the number of construction workers trained to what level. The assumptions behind these aims must also be clearly stated: eg. "Biogas is an acceptable source of fuel to rural people", and in a way that can be easily tested during the programme. All development programmes are based on a series of assumptions about the environment and about the feelings and attitudes of the people who are to be helped. If these assumptions are incorrect, the success of the programme is at risk.

Each component of the programme: technology, finance, publicity, management, follow-up etc. needs to be carefully planned, both as a separate feature, by people experienced in these areas, and in relation to each other. Managers, technicians, financiers and publicity agents need regular coordinating planning meetings to ensure all the different sets of plans fit together well. The form of management structures, especially the clear demarkation of responsibilities for decision making, need to be decided early in the planning process, so that each member of staff knows exactly what they are to do and how to do it.

Plans need to be practical. The early part of the programme should include feasibility studies, market surveys and economic analyses, based on data from the areas where biogas plants are to be sold, to ensure the programme is realistically designed. A pilot programme, building a small number of biogas plants in a limited area, is a valuable way to give insight into possible problems for the future. It also provides training for staff and the testing of management structures and technical approaches.

Plans need to be flexible and constantly reviewed. Regular evaluation is an essential part of the programme, so that achievements can be tested against targets and reasons for poor performance can be identified and corrected. If some previously unidentified circumstance arises (eg. a change in political emphasis), the plans need to be changed quickly enough to allow for it, so the running of the programme is not adversely affected.

The planning process should not be rushed and it needs to be adequately funded. Adequate spending of time and money at an early stage may save mistakes that could be very expensive in terms of both time and money later on. Initial budgets should be fairly large. It is far easier to obtain grant money at the beginning of a new programme than at a later stage, especially if money is required to put right mistakes. Grant money must be available for administrative and runnings costs. Staff must be paid while they are being trained and making plans, before they can earn money for the programme from the work they are doing.

Construction Programme

The initial priority in a biogas extension programme is good, proven technology. Much of this book is devoted to technical designs for this reason. Designs of equipment that are to be built for customers must not only work at the test-site level, but also be well proven in the field. Therefore, in setting up the technical component of the programme research and development staff must plan how they are to field test all the equipment that they are to use, once the prototype designs have been developed.

A second priority is the training of construction staff, who can only learn how to build biogas plants by actually doing the job themselves, with guidance from trained staff.

These requirements suggest that a pilot programme is an effective way to start. A limited number of biogas plants (10 to 30) can be built for customers in a defined geographical area and these plants can be used to train construction workers and to test the technology. While customers must pay the market price for the plant that they receive (calculated on the basis of a full scale programme), adequate guarantees and compensation must be available in case of failures due to inadequate technical design or lack of skills in the builders. The early customers will tend to be the more go-ahead people, who would have a better understanding of the problems involved. They should be willing to accept failures, as long as they themselves do not lose out because of them. If a pilot plant fails, it must be repaired, or replaced by a new one, paid for by the programme. As a last resort, the price paid for the plant may be refunded to the customer, with an extra fee, to compensate for the trouble caused.

The budget for this pilot programme should thus include a 100% guarantee fund for each plant built under it. Also provision should be made for regular visits (eg. 4 visits in the first year after the plant is built) by research and development staff, to discover any design or construction faults that need to be put right. This pilot programme will be relatively expensive and cannot earn a profit. It will give a good indication of the real costs of building biogas plants and provide a basis for economic analyses and pricing for the on-going programme.

As staff skills develop and as the technology becomes reliable, the pilot programme will merge into an on-going extension programme, centred about the pilot area. The guarantee fund will provide the basis for an on-going fund which can be used to repair plant failures. A proportion (5 to 8%) of the price of each plant should be set aside in this fund as an insurance against faults caused by bad workmanship or errors by the construction staff. If the guarantee period is made the same length of time as the loan period, the bank providing finance can be sure of getting the repayments from happy customers.

Organisation and Staffing

The construction programme is best organised on a local level. As the extension programme moves into a new geographical area, staff should be recruited from that area. They can be trained by working alongside experienced staff in an area that already has an established programme. While the movement of staff from an established area into a new one allows flexibility in the programme organisation, it can breed dissatisfaction in the staff. This approach can be costly if relocation and compensation payments must be made to these staff to keep them happy.

Each area (selling perhaps 50 to 100 plants a year) should be responsible for its own management and budgeting. Once a programme is established in an area (within 4 years), it should become self-financing: salaries of staff and other overhead costs coming from the sales of biogas plants. This commercial approach to biogas plant construction should lead to greater efficiency and lower costs, as staff recognise that their earnings depend on their own efforts (Fulford). As it takes time to set up a commercial concern, each area team must be provided with enough working capital to set up their programme and run it for 3 to 4 years until they make a profit. These area teams can be registered as private limited companies, with either cooperative or individual entrepreneur ownership.

Each biogas plant takes 1 to 2 weeks to build, therefore construction staff must spend much of their time in the field. Field allowances must be paid to these staff as compensation for living away from home, even though the customer will often provide food and lodging free to them. Good training and planning are essential to keep these costs low, as they can rise very rapidly if the work is done slowly, or if frequent visits have to be made to remote sites to bring materials that might have been forgotten. Construction staff should be trained in customer relations and in sales techniques as they spend much of their time among customers and their neighbours, who are also potential customers.

Quality control is an essential part of the extension programme. Different systems can be devised: eg. the construction workers ca be paid a bonus for each plant they have built, if it is still working well after 9 months or a year. Each plant should be inspected before it is filled with slurry. Inspections can be done either by a senior member of the construction team, or by sales or follow-up staff. The best advertisement for biogas technology to potential customers is an effective working plant nearby and a happy owner explaining its merits.

Sales and Follow-up of Biogas Plants

While salesmen can be part of the commercial area construction programmes, this approach increases overheads and makes a biogas plant expensive to the customer. A better approach may be to use agricultural extension workers or specialist salesmen, paid from a central government or international aid agency. The same applies to staff responsible for follow-up, who could be the same staff as the salesmen, doing both jobs. Some form of incentive scheme is required that encourages sales and follow-up staff to do their job properly. This type of field work is impossible to supervise, so staff must be paid on proven results. A bonus can also be paid to anyone who sells a biogas plant, such as a construction worker or a loan officer at the bank.

Biogas Extension in Nepal

In Nepal, DCS has discovered some of these principles by using them and proving that they worked. Other principles have been found by trying the opposite, which did not work. DCS effectively started with a pilot extension programme by building 95 biogas plants within 50 km of Butwal. This was done under a national programme organised by HMG/N in the Nepali Agricultural Year of 2033 (1975/76). 95 plants were too many for the first year of a programme, as technical faults did arise and funds were insufficient to put them right. The steel drums started to corrode and DCS's first attempt to repaint them did not solve the problem. About half of these corroded drums have now been replaced, but not all of them, as funds have been difficult to obtain for this work.

The first 12 concrete dome plants and the first 6 tunnel plants built for customers were provided with 100% guarantee funds, although most of the design faults proved to be minor and inexpensive (mainly leaking gas taps).

Another 100 biogas plants were supposed to have been built by the Department of Agriculture, HMG/N, using agricultural extension workers (Junior Technical Assistants) as supervisors. The JTAs were supposed to sell plants to farmers, obtain supplies from central workshops, hire local masons to build the plants and to arrange loans from ADB/N. Neither the JTAs or the masons received much training in the building of biogas plants. Many of the plants had technical problems and a proportion failed (34% - Pyakuryal, Coburn). In some cases, the loans had not been used to build biogas plants, but to build houses or for other purposes.

After the Agricultural Year, the DCS biogas extension programme was formed into a private limited company, which started selling and constructing biogas plants on a national scale in 1976 (2034). The sudden expansion from an area programme to a national one put great strains on the new company, which was already under-financed. The Gobar Gas Company has had to pay for all the work of sales and follow-up as well as covering all the overheads of a central coordinating office. Only research and development and some publicity work was funded by an outside grant through DCS.

The Company has steadily increased sales most years (Table 13.1), but not as fast as planned. It has not been able to make a profit. If the cost of a central coordinating office and of extension agents/salesmen/follow-up staff were to be covered in another way, such as by a government or international aid agency, then the company's profitability could be greatly improved.

The sudden expansion meant that staff from the Butwal area programme had to be promoted and sent to take charge of other areas before they were properly trained or had gained sufficient experience. Technicians were

202

International Year	Nepali Year	Plants Built by:		Type		
		Gobar Gas Co/DCS	Others	SD	CF	FP
1974/75	2031	3	6	9	-	-
1975/76	2032	95	85	180	-	-
1976/77	2033	55	15	70	-	-
1977/78	2034	131	-	131	-	-
1978/79	2035	126	2	126	2	-
1979/80	2036	111	-	91	20	-
1980/81	2037	149	-	53	86	-
1981/82	2038	234	-	31	199	4
1982/83	2039	280	-	13	265	2
1983/84	2040					
Total	10 years	1184	106	714	572	6

Table 13.1 Biogas Plants Built in Nepal

made managers with no management training at all. As staff have gained experience and received some on-the-job training, as time and work have permitted, this weakness is being overcome, but only slowly.

Other problems faced by the Gobar Gas Company have been linked with the supply of materials, especially cement and steel. Since there is often a shortage of these supplies in India, a licencing and quota system has been introduced for the export of them to Nepal. This means that careful planning and management is required to ensure that the correct quantities of materials are available at the right time. Money is also required to pay for these supplies, when they become available, so good cash flow management is essential.

Considering the lack of management training and experience in the staff of the Gobar Gas Company and also the high demands on management made by the economic environment in Nepal, the performance of the company has not been bad.

The follow-up work of the company has been effective. The failure rate of biogas plants in Nepal by the Gobar Gas Company is estimated to be only 5%. All of these failures are steel drum biogas plants, most built in the Agricultural Year by DCS, using low quality steel.

The future of biogas in Nepal looks better. HMG/N is taking a close interest in the benefits that biogas technology can offer to the country's economy. The Department of Agriculture has started offering subsidies to farmers, as they recognise that biogas plants can improve the fertilizer value of cattle dung, especially if that dung is not being burnt as fuel. As artificial fertilizer becomes more expensive and difficult to obtain, this aspect is gaining in importance.

203

Chapter 14. FURTHER IDEAS FOR BIOGAS IN NEPAL D. Fulford

No research and development programme is ever really complete; there are always new ideas and improvements to be tested. The programme described in this book has been finished, as far as DCS is concerned, but the work is still being continued under the Research Wing of the Gobar Gas tatha Krishi Yantra Bikash (P) Ltd. While a full description of their work and results would require another book, a brief review of the directions of their research is given.

Alternative Feedstocks for Biogas Plants

A dependence on cattle dung alone as a feedstock for biogas plants limits the gas available, especially for poorer farmers who may only have one or two animals. Cattle dung is essentially partly digested, ground up vegetable matter, so experiments are continuing with the use of raw vegetable matter as a feedstock for dome type plants (Devkota).

Feedstocks being tested include: water hyacinth, corn cobs, banana leaves, rice straw and a weed called 'banmara' (Eupatorium species), which grows widely in Nepal, but which few animals will eat. Four CDIO biogas plants are being used as batch digesters for these tests: loaded once every two or three months. Between 10 and 40% of slurry from a working digester is added as a seed to supply the populations of bacteria to start the digestion process.

The results look fairly hopeful, especially if the vegetable matter is mixed with cattle dung and the Carbon:Nitrogen ratio is kept between 20 and 30. Banmara, especially, has a high nitrogen content, for plant material, so gives reasonable gas production. However, certain practical problems make the use of vegetable matter difficult.

Large amounts of vegetable matter are difficult to compress into a digester pit, especially if they are unprocessed. Total feedstock concentrations of only 20 to 50 kg/cu.m could be achieved (compared with 70 to 130 kg/cu.m for cattle dung slurry)(Devkota). Hand chopping of vegetable materials with a knife is a very slow and laborious process and would not be accepted by local farmers. It is also inefficient, as it is difficult to reduce all the pieces to a size below 10 mm long (Chapter 10).

A machine is required to chop vegetable matter. A chaff cutter would work for dry materials, but would not cut soft, wet matter, such as water hyacinth or partially composted leaves. A device similar to a large domestic meat mincer could be used.

If vegetable matter is fed continuously into a digester, it usually forms a scum layer on the top of the slurry. Finely ground materials tend to float to the surface of the slurry and stop the gas escaping. Researchers at the Jyoti Solar Energy Institute in Gujurat, India, suggest that vegetable matter should be fed to the top of a digester (Lichtman). Oxygen in the plant cells makes fresh materials float to the top anyway, but if it is fed lower down in the plant, it brings partly digested material to the surface with it. The oxygen in the fresh material should be consumed by the acid forming bacteria at the surface of the slurry, so the vegetable matter can sink, but the partially digested material remains at the surface as a scum. It may also be that the introduction of oxygen-rich material into the methane producing middle layers of the digester disrupts the activity of the methanogenic bacteria. If fresh vegetable matter were introduced at the surface of the slurry, a population of oxygen tolerant bacteria should form in that place, which will consume the oxygen and allow the material to sink.

Scum formation can also be reduced by increasing the viscosity of the slurry. If the solids content of the slurry is increased to around 130 kg/cu.m at 25°C, the mobility of scum and other vegetable matter in the digester is reduced (Jewell), so it is less likely to float to the surface. However, a thicker slurry is more difficult to mix and to introduce into a biogas digester.

A design for an Archemedes screw type slurry pump/mixing machine is shown in Figure 14.1. A model of this pump has been made, but a full size prototype has not yet been made or tested. If it worked, it would offer a solution to all of the above problems. It could be fitted so that the outlet of the pump was just below the surface of the slurry (Figure 14.2), thus introducing the thick, fresh, well mixed feed into the correct region of the digester.

Use of Latrines with Biogas Plants

While the addition of a latrine to a biogas plant is becoming more acceptable to the more modern Nepali people, minor technical problems have prevented their construction in some places. People do not want to touch night soil, so it must be gravity fed into the plant. The base of the mixing pit is at least 0.5 m above ground level. The bowl of an Asian (squatting) type toilet must be placed below floor level, so the outlet (if a 'U' trap is fitted) comes about 0.4 m below floor level. Thus the floor of the latrine must be about 1 m above the ground if the system is to work effectively, and slurry from the plant is not to come into the latrine.

If the night soil is to be mixed (eg. in a mixing machine), before it is fed into the biogas plant, the latrine may be 2 m above ground level. The night soil plant in Tansen (Chapter 2) was sited on a slope

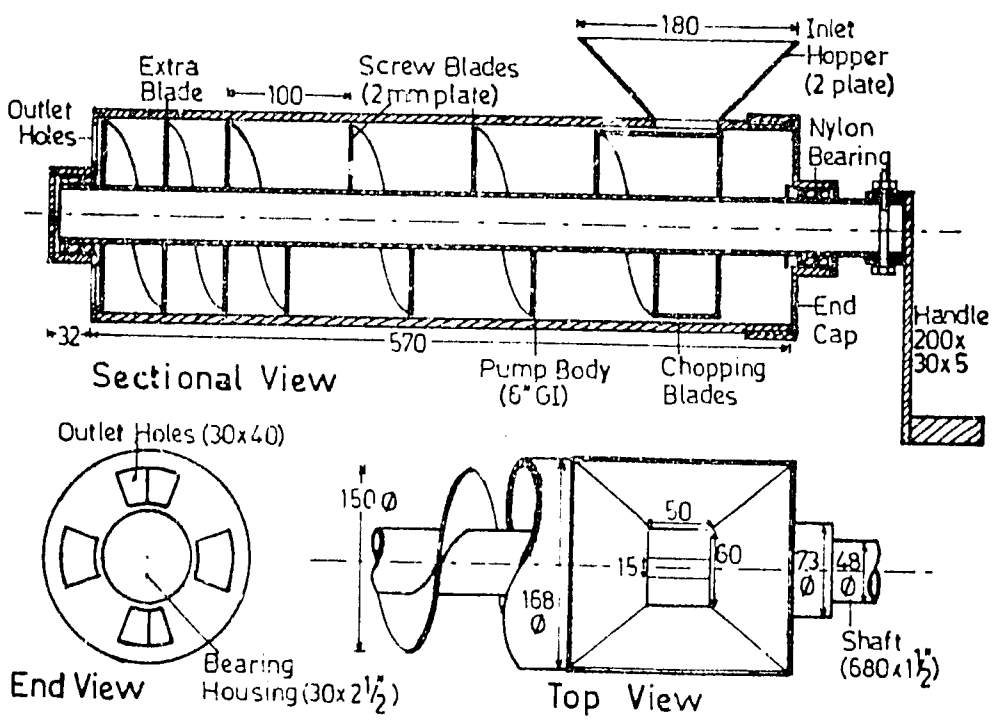

Figure 14.1 A Suggested Design for an Archemedes Screw Slurry Pump.

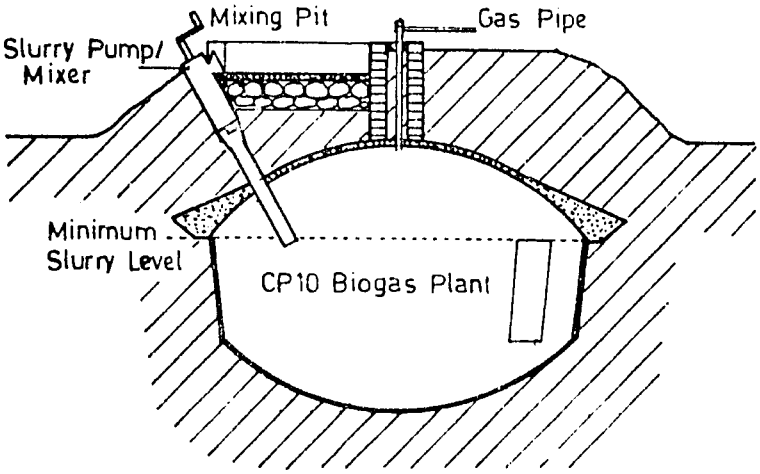

Figure 14.2 Use of Slurry Pump to Introduce Feed into Biogas Plant.

so it was below the latrines, so this was possible. In other sites, it would be very difficult to site a latrine so high from the ground. There have been several requests for cesspits to be adapted, so that the biogas can be collected. If both the cesspits and the latrines have been built, this would be impossible to do.

A further problem is that water used to flush the latrine can dilute the slurry. If a syphon type flush system is used, the solids content from the latrine may be only 2%. If urine is also included, the total solids may be reduced to 1% or less.

A possible solution is the use of a settling tank. If the wastes from the latrine are left in a tank for 24 to 48 hours, the solid material should sink to the bottom and form a sludge layer. The excess water can be wasted through an overflow in the top of the tank into a soaking pit; a hole in the ground full of stones, which allows the water to soak into the surrounding soil. An Archemedes screw slurry pump can be used to lift the solid sludge from the settling pit to a point where it can be fed into the biogas digester. This hand operated pump can also be used to mix the night soil, as it is pumped (Figure 14.3). The pump would have to be made from a corrosion resistant material, or coated with a strong paint, such as epoxy, as night soil is very corrosive. High Density Polyethylene, which can be welded with a hot air gun, could be used.

Extended Dome Biogas Plant

The growing popularity of community biogas plants has indicated a gap in the range of designs that are being produced in Nepal. The largest dome design is the CP20 plant, which produces between 3.5 and 5 cu.m gas per day, depending on feed and temperature. The largest steel drum plant, the SD500, produces between 8 and 12 cu.m of gas a day. The disadvantages of the drum design, especially the difficulty of transport for such a large drum to a remote area, suggest that a larger size of displacement digester is required. A CP50 plant was designed, but the digester pit would have to be so deep (4.8 m) that it would be very

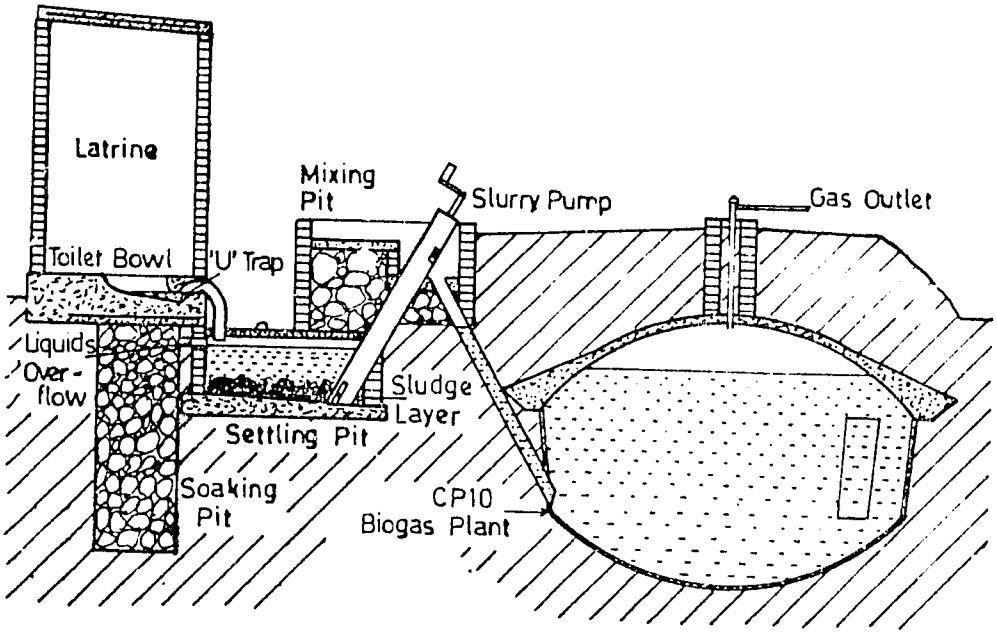

Figure 14.3 Use of Settling Pit and Slurry Pump with a Latrine.

difficult to dig, especially if the spoil had to be removed through the slurry outlet.

A better solution is the Extended Dome design (EP), which is a hybrid between the dome and tunnel designs. The gas storage volume is made as a partially cylindrical tunnel (4 m wide) closed by domed ends (each effectively half a CP20 dome). While the roof could be made in a way similar to that of the dome designs, by casting it over a mud mould, the digging of a large chamber underneath the roof would be laborious. If several plants are to be made to this design, a steel form (Figure 14.4) should be made, which allows the roof to be cast after the digester pit is dug and lined with brick masonry (in a way similar to that for the brick lined tunnel plant).

If the central tunnel section is made 4 m long (Figure 14.5), the total internal volume is about 54.6 cu.m (EP50 plant). This tunnel section can be made different lengths, by including more or fewer sections of form, to give a range of sizes of biogas plant (up to EP95 or more). For these larger plants, the slurry reservoir has a large surface area. The main area of the reservoir can be covered by another length of tunnel, reducing the amount of steel reinforcing rod required.

Construction Details for the Extended Dome Design

The principles of construction follow the same lines as for the dome design (see Chapter 3). A suitably shaped hole (depth 920) is dug, with the guidance of a template (Figure 14.6). The edges of the hole should be lined with bricks (placed at 45°), to act as a foundation for the dome. If the ground is of questionable quality, this foundation should be 1½ bricks, or even 2 bricks, wide (Volume II, Chapter 7).

The digester pit is then dug and lined with bricks: put flat on the floor and laid as a half brick wall at the sides. A row of full bricks at the base of the walls, helps to spread the load on the floor and another full row at the top acts as a ledge. The metal form is bolted

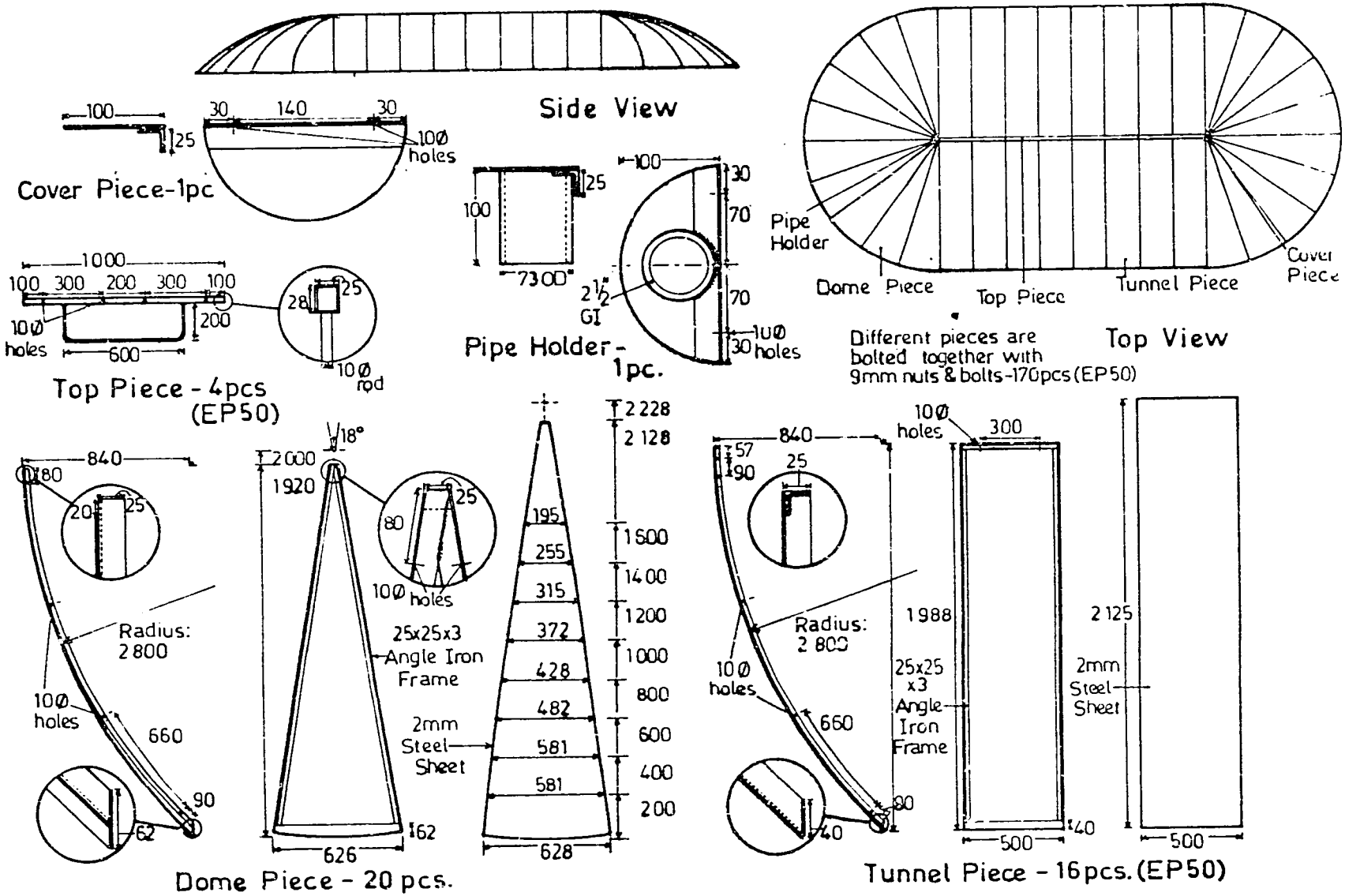

Figure 14.4 Steel Mould for Extended Dome Biogas Plant

Plant Type	L (m)	S (m)	B (m)	Total Vol m^3	Dome Vol m^3	Digest Vol m^3	Working Vol m^3
EP20	0	0	2 320	22.944	5.439	17.505	20.225
EP35	2 000	1 000	1 800	38.748	10.043	28.705	33.727
EP50	4 000	2 000	1 400	54.552	14.647	39.905	47.229
EP65	6 000	3 000	1 400	70.356	19.251	51.105	60.731
EP80	8 000	4 000	1 400	86.160	23.855	62.305	74.233
EP95	10 000	5 000	1 400	101.964	28.459	73.505	87.735

Table 14.1 Dimensions of Different Extended Dome Designs

together in place on this ledge and the gas outlet pipe (Figure 14.6) is put in place. The surface of the form is coated with a paste of mud and water, so the concrete does not adhere to it.

The whole roof must be cast at one time, within one day, so enough labourers, masons and materials must be available and prepared to do this. A small cement mixing machine would ease the job for larger sized plants. The concrete (1:3:3 mix) should cure for at least 7 days, kept damp with sacking that is regularly wetted. The form can be unbolted and removed, once the dome is strong enough.

The inside of the dome is carefully cleaned of mud, dampened with water and plastered with mixtures of cement, sand and acrylic emulsion in the same way as dome plants (8 mm of 1:2 with 2% paint + 3 mm of cement with 4% paint). If the bricks and outside soil are likely to be porous and leak slurry, the inside of the digester pit can also be plastered (1:1:6 of cement, lime and sand).

The cover over the digester pit is made in the same way as the digester pit roof, except that the inside need not be plastered. For these larger plants, a mixing machine should be used to mix the slurry. A conventional mixing machine (see Chapter 5) or a larger version of the Achemedes screw machine could be used.

Plant Type	Work. Vol m^3	Ret. Time day	1:1 Mix			1:½ Mix		
			Dung kg	Water lit	Gas m^3	Dung kg	Water lit	Gas m^3
EP20	20.2	78	130	130	4.02	170	90	5.36
EP35	33.7	77	220	220	6.78	290	150	9.03
EP50	47.2	79	300	300	9.31	400	200	12.41
EP65	60.7	76	400	400	12.29	530	270	16.38
EP80	74.2	74	500	500	15.26	670	330	20.35
EP95	87.7	73	600	600	18.24	800	400	24.31

Table 14.2 Characteristics of Extended Dome Biogas Plants

Practical Experience with Extended Dome Plants

At the time of writing, one extended dome plant has been built, an EP50 biogas plant. The steel mould system for the roof worked well, the roof proved easy to make and the mould could be removed without too much difficulty. The inside surface of the roof proved to be a little too smooth for good plastering, so it was scrubbed with a wire brush and roughened with a chisel, to provide a key for the plaster.

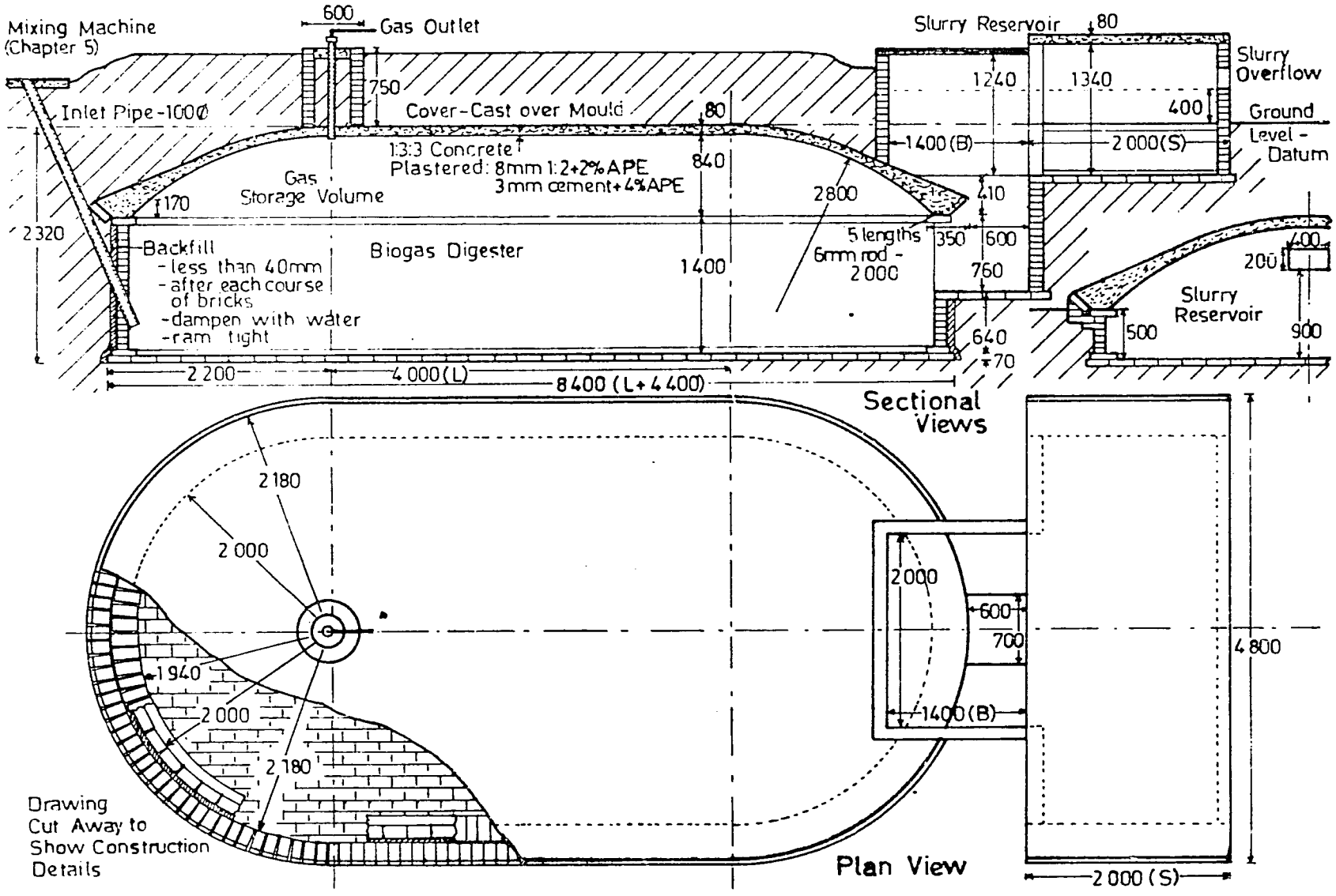

Figure 14.5 Extended Dome Biogas Plant (EP50)

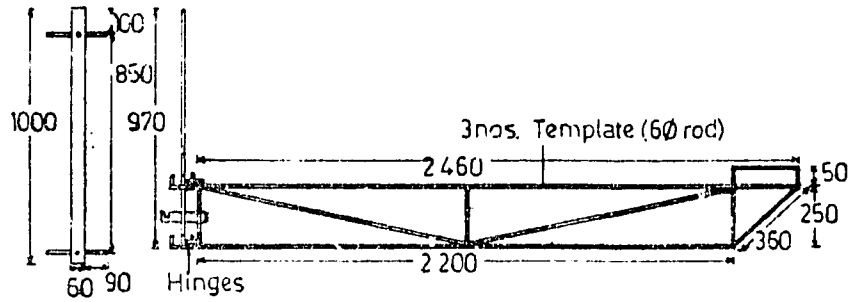

Figure 14.6 Steel Template and Gas Outlet for Extended Dome Plants

This plant will be carefully followed-up, as will the other EP50 plants that are now on order from the Gobar Gas Company. As the technology involved in this design is an extension of a technology that is known to work well (that of the dome plants), the staff of the Gobar Gas Company do not expect any problems to occur in these plants.

Materials	EP20 Plant	2 m Tunnel (T)	EP50 (EP20 + 2T)	EP95 (EP20 + 5T)
Bricks	3,000	1,100	5,200	8,500
Cement kg	950 (22)	700 (16)	2,350 (54)	4,450 (100)
Sand lit	2,400 (70)	1,500 (44)	5,400 (156)	9,900 (285)
Gravel lit	1,400 (41)	1,200 (35)	3,800 (110)	7,400 (212)
Steel rod	130 m (6mm)	-	100 m (6mm)	100 m (6mm)
Gas Outlet	1 m	-	1 m	1 m
Inlet Pipe	2.7m	-	2.7m	2.7m
Mix machine	1	-	1	1

Table 14.3 Material Quantities for Extended Dome Plants.

211

Vol. I

BIBLIOGRAPHY

ADB (1982, Dec) Nepal Agricultural Sector Strategy Study; Asian Development Bank, HMG, Kathmandu: Vol. I & Vol. II.

APHA (1955 10Ed) Standard Methods for the Examination of Water, Sewage and Industrial Wastes; American Public Health Assoc., New York:

Agarwal A. (1983, Feb) The Forgotten Energy Crisis; New Scientist, London, U.K.: V. 97, N. 1344, p. 377

Amal (1972) Natural Draft Injecters for Burning Sludge Gas; Amal Ltd., Birmingham, B6 7ES, UK: List 403/3

Barnett A., Pyle L., Subramanian S.K. (1978) Biogas Technology in the Third World; International Development Research Centre, Ottawa, Canada: IRDC-103e, ISBN 88936 162 2

Bhasin K. (1979, Jan) A South Asian Experience of Training for Participatory Development: Freedom from Hunger Campaign: FAO, Bangkok, Rome

Bhasin K., Palshikar V., Rao L. (1980) The Role and the Training of Development Activists; FAO, New Delhi/Rome or CDRA, Madras:

Bird R.B., Stewart W.e., Lightfoot E.N. (1960) Transport Phenomena; John Wiley, New York, USA: ISBN 0 471 07392X

Bulmer A. (1980, Aug) A Survey of 3 Community Biogas Plants in Nepal; (DCS) NTIS, Springfield, 22161, USA: PB83-166-991

Bulmer A., Schlorholtz A. (1979, Jan) Gobar Gas Survey in Nepal; (DCS) NTIS, Springfield, 22161, USA: PB83-166-991

CAI (1969) Concrete Handbook; Concrete Association of India, Bombay:

CAI (1972) Cement Plastering; Concrete Association of India, Bombay:

CBS/HMG (1972) Foreign Trade Statistics of Nepal (1967-1971); Central Bureau of Statistics, HMG/N, Kathmandu, Nepal:

CEDA (1981) The Status of Women in Nepal; Centre for Economic Development and Administration, Tribhuvan Univ., Kathmandu: Vol. II, Part 2 & Vol. II, Part 9

Campbell J.G. (1983) People and Forests in Hill Nepal: Community Forestry, Ministry of Forestry, Kathmandu:

Clark G.C., Crowley M.M., de los Reyes B.N. (1977, May) Annual Report on Nepal's Experimental Field Action-cum-research Project; Small Farmer's Development Unit: FAO, Bangkok

Clyde (-) "O" Ring Specialists; Clyde Rye Bearings Ltd., London SW6 1DW:

Coburn B.A. (1977) Study of the Energy Needs of the Food System in Nepal; Progress Report, American Peace Corps, Kathmandu:

Devkota G. (1982) Report on Second Inspection Visit to Dome Design of Gobar Gas Plants Constructed in Pokhara; Gobar Gas tatha Krishi Yantra Bikash, Butwal, Nepal:

Devkota G. (1982) Efficiency of Gobar Gas Stoves; Gobar Gas tatha Krishi Yantra Bikash (P) Ltd., Butwal, Nepal:

Dunn P.d. (1978) Appropriate Technology, Technology with a Human Face; McMillan, London: ISBN 0-333-24207-6

ERDG (1976, Nov) Nepal: The Energy Sector; Energy Research and Development Group, Tribhuvan Univ., Kathmandu:

ESCAP (1980) Guidebook on Biogas Development; United Nations Energy Resources Series No.21: ST/ESCAP/96

212

Eggling G., Guldager R.& H., Hilliges G., Sasse L., Tietjan C., Werner U. (1979) Biogas: Manual for the Realisation of Biogas Programmes; BORDA, Bremen, W.Germany:
El-Halwagi M.M. (1980) The Development and Application of Biogas Technology in Rural Areas of Egypt; National Research Centre, Egypt: Applied Science and Technology Project No. 263-0016
Ellegard A., Jonsson A., Zellergrist A. (1983) Biogas - Not Just a Technology: SIDA, Gothenburg, Sweden:
FAO 40 (1977) China: Recycling of Organic Wastes in Agriculture: Food and Agricultural Organisation, Rome: ISBN 92-5-100524-9
FAO 41 (1978) Azolla Propogation and Small Scale Biogas Technology; Food and Agricultural Organisation, Rome: ISBN 95-5-100721-7, Rome
FFHC (1973) People's Participation in Development: Indian Freedom From Hunger Campaign Society, Calcutta, India: (also from FAO, New Delhi, Rome)
Finlay J.H. (1978) Operation and Maintenance of Gobar Gas Plants: NTIS, Springfield, 22161, USA (DCS): PB83-162 107
Fry L.J. (1974) Practical Building of Methane Power Plants; Fry, Santa Barbara, USA:
Fulford D.J. (1981) Gobar Gas Irrigation in Nepal; Biogas Nepal, Shakti Pub., PO 1309, Kathmandu, Nepal: V.13, p.6
Fulford D.J. (1978, Sep) A Commercial Approach to Biogas Extension in Nepal; Appropriate Technology, London: V.8, N.2, p.14
Fulford D.J. (1978) Biogas in Nepal: State of the Art: (DCS) NTIS, Springfield, 22161, USA: PB83-166 702
Fulford D.J. (1979) Using Gobar Gas to Fuel a Cheese Plant in Karkimankamana; DCS, Butwal, Nepal:
Gardiner M. (1979) Running a Fridge on Cowdung Gas: Biogas Nepal, Shakti Pubs, PO 1309, Kathmandu, Nepal: No.5, p.3
Garg M.K. (-) The Development of an Appropriate Technology for Decentralised Pottery Industry in Rural India: Appropriate Technology Development Assoc., Lucknow, India:
Gittenger J. Price, Ed. (1973) Compounding and Discounting Tables for Project Evaluation: Economic Development Inst. of the International Bank for Reconstruction and Development, Washington, USA:
Gopal, Sharma (1981) Water Hyacinth Composition:
Hackett W.F., Conners W.J., Kirk T.K., Zeikus J.G. (1977) Microbial Decomposition of Synthetic 14C-labelled Lignin in Nature: Appl. Environ. Microbiol.: 33,43
Hall (-) Hallprene "O" Rings: Hall & Hall Ltd., UK: BS 1806, 1962
Hobson P.N., Summers R., Bousfield S. (1979) Uses and Analysis of Digested Sludge: A Symposium on Anaerobic Digestion, University College, Cardiff, UK: (Rowett Inst., Aberdeen)
Hollingdale A.c., Coward L.D.G. (1979) Biogas Technology in Cold Climatic Conditions in Korea; Tropical Products Inst., ODA, London WC1X 8LU:
House D. (1978) The Complete Biogas Handbook: VAHID, Aurora, CR7002, USA:
Idnani M.A., Varadarajan S. (1974 2Ed) Fuel Gas and Manure by Anaerobic Fermentation of Organic Materials; Indian Council of Agricultural Research, New Delhi: ICAR-TB/46
Israelson O.W., Hansen V.E. (1962) Irrigation Principles and Practices: John Wiley, New York:

Jewell W.J., Chandler J.A., Dell'Orto S., Fanfoni K.J., Fast S., Jackson D., Kabrick R.M. (1981, Sept) Dry Fermentation of Agricultural Residues: Solar Energy Research Inst., Golden, 80401, USA: SERI/TR-09038-7 (NTIS)

Jewell W.J., Dell'Orto S., Fanfoni K.J., Hayes T.d., Leuschner A.P., Sherman D.F. (1980, Apr) Anaerobic Fermentation of Agricultural Residues: Cornell Univ., New York, 14853: DE-AC02-76ET20051, OS Dept. of Energy

KVIC (1975) Gobar Gas How and Why: Khadi and Village Industries Commission, Bombay, India 400056:

KVIC (1972) Details of Mixer (Blue Print): Khadi and Village Industries Commission, Bombay 400056, India:

Khan A.W., Trotter T.M. (1978) Effect of Sulphur Containing Compounds on Anaerobic Degradation of Cellulose to Methane by Mixed Cultures Obtained from Sewage and Sludge: App. & Environ. Microbiology: V. 35, No.6

Kirloskar (-) Operationa and Performance of Engines Running on Biogas: Kirloskar Oil Engines Ltd., Pune, India:

Kirloskar (-) Selection Charts for Kirloskar Diesel Engine Pumping Sets; Kirloskar Oil Engines, Pune, India:

Kirloskar (-) Dual Fuel Biogas Engine: Kirloskar Oil Engines Ltd., Pune, India:

Kwon I., Kim H. (1978) Studies on Biogas Production from Several Animal Faeces; ESCAP, Expert Group Meeting on Biogas, Bangkok: (Seoul National Univ., Suwon, Rep. of Korea)

Lau-Wong M. (1982, May) Enhancement of Biogas Production in Cold Climate; UNESCO/COSTED Conf., Kathmandu:

Lau-Wong, M. (1979) Evaluation and Analysis of Chemically Treated Straw, and a Stochastic Simulation Model of the Ruminant's Digesive System; Cornell Univ., New York, USA: Ph.D. Thesis

Lichtman R.J-. (1983) Biogas Systems in India: Volanteers in Technical Assist., Arlington 22209-2079, USA: ISBN 0 86619 167 4

Machinery's - Horton H.L., Schubert P.B., Garratt G. (1971 9Ed) Machinery's Handbook; Industrial Press, New York: Lib. Congress 14-2166

Mahato K. (1979, Apr) Case Study of Group No. 7: Small Farmers' Development Project, Freedom From Hunger Campaign, FAO, Bangkok: SFDP N-35

Makhijani A, Poole A. (1976) Energy and Agriculture in the Third World; Ballinger, Cambridge, USA: ISBN 0 88410 342 0

Maramba F.D. (1978) Biogas and Waste Recycling: the Philippine Experience; Liberty Flour Mills Inc., Metro Manilla, Philippines:

McCarty P. (1964) Anaerobic Waste Treatment and Fundimentals:

McFarlane P.N., Pfeffer J.T. (1981) Biological Conversion of Biomass to Methane: Solar Energy Research Inst., Golden, 80401, USA: SERI/TR-98357-1 (NTIS)

McGarry M.G., Stainforth J. -Eds (1978) Compost, Fertilizer and Biogas Production from Human and Farm Wastes in the People's Republic of China: International Development Research Centre, Ottawa, Canada: IDRC-TS8e

Meier U. (1978) The Pauwa Energy System; SATA, PO 113, Kathmandu, Nepal:

214

Merrit F.S. - Ed (1978, 2Ed) Standard Handbook for Civil Engineers: McGraw-Hill, New York: ISBN 0-07-041510-2
Meynell P.J. (1976) Methane: Planning a Digester; Prism Press, Dorchester, UK: ISBN O 904727 122
Minto S.D., Westley S.B. (1975) Low Cost Rural Equipment Suitable for Manufacturers in East Africa; Inst. for Development Studies, PO 30197, Nairobi, Kenya:
Mosey F.E. (1979) Sewage Treatment using Anaerobic Fermentation; Symposium on Anaerobic Digestion, University College, Cardiff, UK: (Water Research Centre, Stevenage)
Moulik T.K., Srivastava U.K. (1975) Biogas Plants at the Village Level: Problems and Prospects in Gujarat; CMA, Indian Institute of Management, Ahmedabad, India: IIM Monograph 59
NAS (1981) Methane Generation from Human, Animal and Agricultural Wastes; National Academy of Sciences, Washington, USA: No.19
Pang A. (1978) Economics of Gobar Gas: NTIS, Springfield, 22161, USA (DCS): PB83-166 694
Patel (-) Gobar Gas Appliances; Patel Gas Crafters (P) Ltd., Bombay 400 054, India:
Perry R.H., Chilton C.H. -Eds (1973, 5Ed) Chemical Engineers Handbook; McGraw Hill, New York, USA: ISBN 07 049478 9
Picken D.J. (-) Uses of Biogas for Thermal, Mechanical and Electrical Power Generation; Leicester Polytechnic, UK:
Pritchard R., Guy J.J., Connor N.E. (1977) Industrial Gas Utilization; Bowker, Epping, UK (British Gas Corp.): ISBN O 859 35 055 2
Pyakural, Karki, Axinn (1978) Techno-Socio-Economic Study on Biogas; Biogas Nepal, Shakti Pubs., PO 1309, Kathmandu: N.2, p.6
Pyle D.L. (1979) Anaerobic Digester Designs in the Third World: Symposium of Anaerobic Digestion, University College, Cardiff, UK: (Imperial College, London)
RAFE 36. (1978) Small Farmer's Development Manual; FAO, Bangkok, Thailand:
Reddy A.K.N. (1980) Rural Technology: Indian Institute of Sciences, Bangalore, India:
Roy R. (1981, Jun) Family and Community Biogas Plants in Rural India: Appropriate Technology, London: V.8., N.1, p.17
SATA (1977) Mountain Environment and Development; Swiss Assoc. for Technical Assistance in Nepal, Kathmandu:
SPIIBD (-) Construction of Marsh-gas-producing Tanks (Digesters) in Simple Ways; Szechwan Provincial Institute of Industrial Building Design, China: (Copied by A. Bachmann, SATA, PO 113, Kathmandu, Nepal)
Sathainathan M.A. (1975) Biogas Achievements and Challanges; Assoc. Volantary Agencies for Rural Development, New Delhi:
Sharma C.K. (1977) River Systems of Nepal; Kathmandu:
Sharma C.K. (1974) Ground Water Resources of Nepal; Kathmandu:
Shibatasan (1980) Irrigation Variety Trial on Early Paddy in 1980, Proposed Cropping Pattern and Expected Production Increase on Model Infrastructure Programme; Janakpur Agricultural Development Project, Janakpur, Nepal:
Soubolle B.R. (1976) Fuel Gas from Cow Dung: Sahayogi Press, Kathmandu:

215

Stern P.H. (1979) Small Scale Irrigation; Intermediate Technology Pubs., London: ISBN 0 903031 64 7

Stevens M.E. (-) Land Use Patterns for Marginal Land; APROSC, Kathmandu:

Streeter V.L. (1971, 5Ed) Fluid Mechanics; McGraw Hill, New York: Lib. Congress 77-125110

Subba-Rao (1980) Soil Microorganisms and Plant Growth: Oxford & IBH Pub. Co., New Delhi, India 110001:

Subramanian S.K. (1977) Biogas Systems in Asia; Management Development Institute, New Delhi 110057:

Tam D.M., Thanh N.C. (1982) Biogas Technology in Developing Countries; Environmental Sanitation Reviews, AIT, Bangkok, Thailand, 19: ISSN 0125-5088

Thery D. (1981) The Biogas Progress in India and China: Ecodevelopment News No. 19, UNEP, Paris: (Resource Management & Optimization, V.1 (4), Oct. 61, p. 289)

UNIDO (1980, Jan) Biogas Utilization; United Nations Industrial Development Organisation: (Sichuan Provincial Office for Biogas Development, China), ID/WG.321/6

Van Buren A., Crook M. -Eds (1979) A Chinese Biogas Manual; Intermediate Technology Pubs., London, UK: ISBN 0 903031 6 55

Van Soest P.J., Robertson J.B. (-) Composition and Nutritive Value of Uncommon Feedstuffs; Dept. Animal Science, Cornell Univ., New York:

Weast R.C., Astle M.J. (1979, 60Ed) Handbook of Chemistry and Physics; CRC Press, Boca Raton, USA: ISBN 0 8493 0460 8

World Bank (1975) Agricultural Credit, Sectors Policy Paper; World Bank, Washington D.C.:

Wyatt Smith J. (1982) The Agricultural System in the Hills of Nepal; APROSC Occ. Papers, 1, Agricultural Projects Research Centre, Kathmandu:

Yawalker K.S., Agarwal J.P., Bodke S. (1977, 4Ed) Manures and Fertilizers; Agri-Horticultural Pub. House, Nagpur, India:

216

Vol. II

BIBLIOGRAPHY

Bell, Boulter, Dunlop, Keiller (1973) Methane, Fuel of the Future: Andrew Singer, Bottisham, UK: ISBN 0 903315 05 X

Bente P.F. -Ed (1981) The International Bio-Energy Directory; Bio-Energy Council, Washington, USA:

Brakel J.V. (1980) The Ignis FAtus of Biogas; Delft Univ. Press, Holland: ISBN 90 67750 494

Chung Po -Ed (1980) Animal Waste Treatment and Utilization; Council for Agricultural Planning and Development, Tapei, Taiwan:

Devkota G. (1983) Biogas Research and Development in Nepal: (Gobar Gas tatha Krishi Yantra Bikash (P) Ltd., Butwal, Nepal): International Workshop on renewable Energy Resources, Lahore, Pakistan.

Devkota G. (1983) Utilization of Eupatorium Species as an Alternative Feedstock for Producing Biogas: Gobar Gas tatha Krishi Yantra Bikash (P) Ltd., Butwal, Nepal:

ECDC-TCDC (1981) Renewable Sources of Energy - Vol. II, Biogas; ESCAP, United Nations, Bangkok: ST/ESCAP/160

Finaly J.H., Shrestha P.C. (1976-1980) First, Second, Third Inspection Visits to 95 Nepali Biogas Plants: (DCS) NTIS, Springfield, 22161, USA: PB83-166 694

Freemen C., Pyle L. (1977) Methane Generation by Anaerobic Fermentation - Annotated Bibliography; Intermediate Technology Pubs., London WC2E 8HN: ISBN 0 90[illegible]031 41 8

Ghate P.B. (-) A Pilot Project to Investigate a Decentralised Energy System; Planning, Research and Action Div., Lucknow, India:

Karki A.B., Coburn B.A. (1976) The Prospect of Biogas as One of the Sources of Energy in Nepal; Div. Soil Science and Agricultural Chemistry, HMG/N, Khumaltar, Nepal: (American Peace Corps, Kathmandu)

Mazumdar A. (1982) Biogas Handbook; TATA Energy Research Inst., Bombay 400023, India:

Muzumdar A. (1982) Review of the Literature on the Promotion of Biogas Systems; TATA Energy Research Inst., Bombay 400023:

NAI (1973) Methane Digesters for Fuel and Fertilizer; New Alchemy Inst., Woods Hole, 02543, USA: No. 3

PRAD (-) Community Biogas Plant; Planning, Research and Action Div., Lucknow, India:

Patankar G.L. (1977) Recent Developments in Gobar Gas Technology; Gobar Gas Development Centre, KVIC, Bombay:

Prasad C.R., Prasad K.K., Reddy A.K.N. (1974) Biogas Plants, Prospects, Problems and Tasks; Economic and Political Weekly: IX (32-34), Special Number

Raman N.V., Narayanaswarmy V.P., Sharma P.C., Jayaraman H.B. (1979, Apr) Ferrocement Gas Holder for Biogas Plants; Journal of Ferrocement, AIT, Bangkok: V.9, N.2, p.93

Ruchen C., Nianguo L. (1981, Sept) The Development of Biogas Utilization in China; Biogas Journal, App. Science Pub., London: V.1, N.1, pp. 39-46

Sharma C.K.H. (1974) Land Slides and Soil Erosion in Nepal; S. Sharma, Kathmandu:

Singh R.B. (1973) Biogas Plant Designs with Specifications: Gobar Gas Research Station, Ajitmal (Etawah), India:

Singh R.B. (1974) Biogas Plants: Gobar Gas Research Station, Ajitmal (Etawah), India:

Singh R., Chhabra N.N. (1976) The Economics of Cow-Dung Gas Plants; Indian Council of Agricultural Research, New Delhi:

Srinivasan H.R. (1978) Gobar Gas, Retrospects and Prospects; Khadi and Village Industries Commission, Bombay 400056:

UNESCO (1982) International Ditectory of New and Renewable Sources of Energy; UNESCO, United Nations, Paris: (SERI, Golden, USA)

UNESCO (1983) The Fragile Mountain (Film); UNESCO, United Nations, Paris:

UNIDO (1979) Appropriate Technology for Energy for Rural Requirements; UNIDO, United Nations, Monographs on Appropriate Industrial Development: No.5

USAID (1981) Bioenergy Conversion Handbook for Developing Countries; Office of Energy, USAID, Washington, USA:

Vaclav S. (1979, Jul) Biogas Production in China: Development Digest, USAID, Washington, USA: V.XVII, N.3, pp. 25-28 (World Development V.4, No.10-11, pp. 927-937, Nov. 1976)

BIOGAS

Challenges And Experience From Nepal

Vol. II

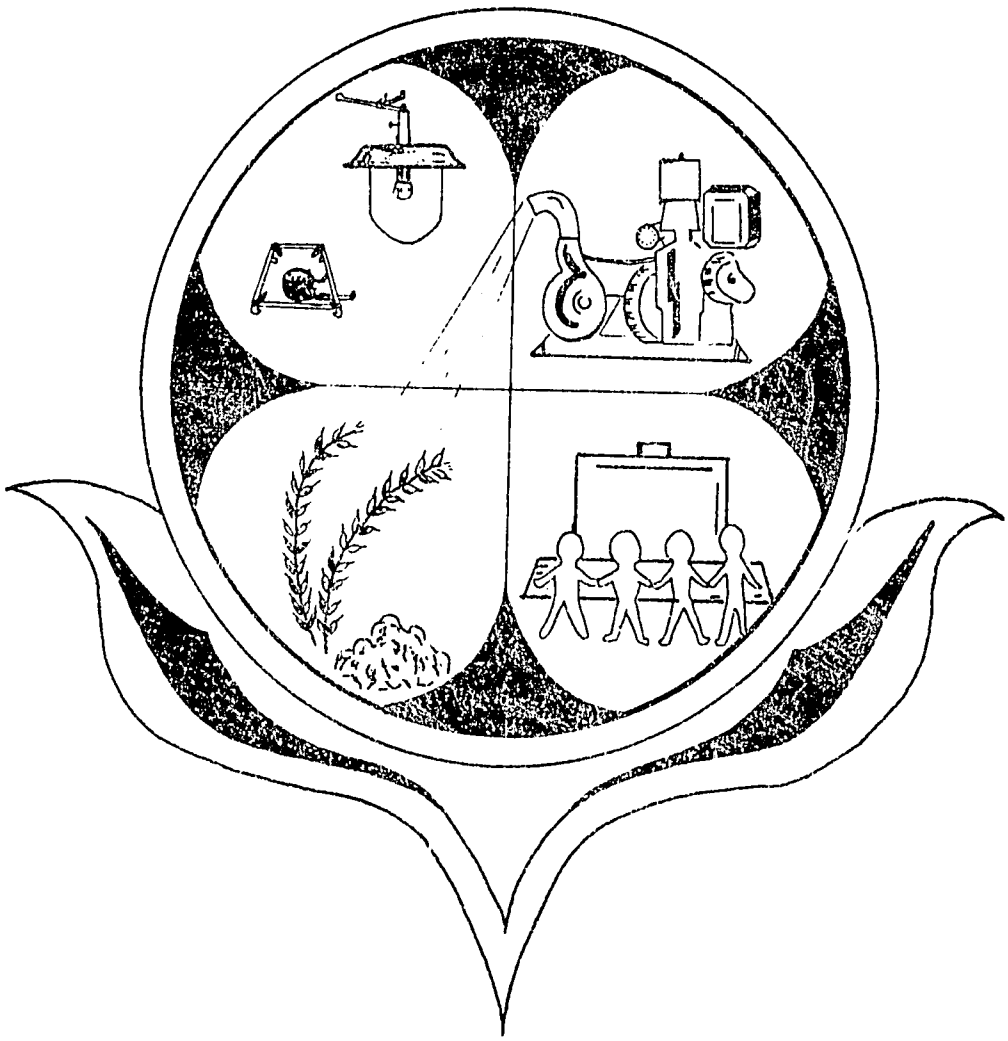

United Mission To Nepal

Permission is hereby granted by the United Mission to Nepal to reproduce the material in this book for education and development work, on the conditions that it would not be used for commercial sale and full citation of the source be acknowledged.

Each chapter in this book represents the opinion of its individual author, and it may not necessarily reflect the opinion of the United Mission to Nepal or the other authors.

Published by the United Mission to Nepal.

First edition, 1985.

220

ABOUT THE AUTHORS

Andrew Bulmer, BA, General Arts from Durham University, U.K. After his studies he worked for 4 years in Orissa, India, with the Village Reconstruction Organization which aimed to assist village communities after being devastated by cyclones. Since then he has been in Nepal, living largely in one community for over 4 years and involved in general development activities there, as well as being specifically concerned with assessing the effectiveness of Community Biogas Systems.

John Finlay, C. Eng., MI Prod E., worked in the engineering industry in U.K. for 17 years in various positions including value analysis, and organization and method study. He has been working in Biogas research in the Development and Consulting Services since 1974, and has presented papers on this subject in various countries. He has also compiled and technically edited the United Nations book 'Guidebook on Biogas Development'. His particular concern has been reliable cattledung biogas plants and accessories suitable for village use which are low cost but also efficient.

David Fulford, B.Sc., Physics from Bristol University, U.K. In previous assignments, he has worked as scientific officer at RAF, Farborough, researching on fuel system for aircraft. He was also research assistant at the University of Reading, where his interests were in the Humphrey Pump and development of appropriate technology for developing countries. After joining the Biogas Programme at the Development and Consulting Services, he researched on the wet type gas meter and the Humphrey Pump. He has published various papers and reports in this field.

Mamie M. Lau-Wong, B.Sc., Ph.D., received her doctorate in Chemical Engineering at Cornell University, U.S.A., where she specialised in culturing aerobic and anaerobic micro-organisms for industrial purposes, and computer simulation of fermentation processes in living ruminants. As consultant to the Development and Consulting Services of the United Mission to Nepal, she has been engaged in Biogas research and training, presented papers in Biogas Conferences, and published various papers in this field. She is also involved in the production and field testing of nitrogen-fixing bacterial fertilizer for cereal crops.

ACKNOWLEDGEMENT

Since its commencement in 1974, the biogas research, development, and extension work undertaken at the Development and Consulting Services has been financially supported by three agencies:

The United States Agency for International Development (Grant no.: 498-0251 (367-0139) (OPG) Nepal).

The Mennonite Central Committee, U.S.A., and

The Canadian High Commision Small Project Fund.

We would like to express our grateful appreciation to their assistance.

Written materials and diagrams used in Ch. 2, 5, 6, 7, and 9 in Vol. I are partly based on the "Guidebook on Biogas Development", published by the United Nations Economic and Social Commision for Asia and the Pacific. Their permission for the use of the material is gratefully acknowledged.

Besides the four authors, significant research and development were accomplished by Mr. Nick Peters. He pioneered in adapting the concrete dome plant for Nepal and developing the plastering system for making the dome gas tight.

Last but not least, credit goes to the staff of the Gobar Gas tatha Krishi Yantra Bikash Private Ltd., and to the many other Nepalis and expatriates whose cooperation has contributed considerably to this work.

PREFACE .

For the past 30 years, the United Mission to Nepal has sought to meet the basic needs of people in Nepal, related to the areas of medical, educational and economic development. Its personnel have come from many different lands with various qualifications and skills, working toward the enablement of people by offering opportunity and training. There has been a mutual learning and sharing experience, resulting in projects and programmes which emphasise service towards others and the equitable sharing of benefits among the less advantaged and privileged.

Biogas is one area of the development and sharing of appropriate technology which is geared to making renewable energy resources available to those who need them. For the past 7 years, the Development and Consulting Services of UMN, at Butwal, has assigned and supervised the research and development of improved biogas plants and appliances, striving to make this equipment more efficient, effective and economical. Design work and production of biogas plants and appliances have been closely monitored by DCS engineers and technicians in the laboratory and workshops, as well as in the field. Testing of the performance of installed biogas plants and related equipment has been oriented to the customers on the farms of Nepal and it has been carefully monitored to ensure not only quality control, but also quality of operation.

This book describes the concept, purposes, implementation, constant revision, and implications of the whole process and its history. Amply illustrated and informative, the book records the achievements (and failures) of a dedicated task force which has persisted in a quest for advancing a technology, despite limited facilities. They have also gone beyond the mere mechanics and technicalities to address the economic, social and management aspects of biogas technology in the context of Nepal as a culture and society seeking development goals.

May I take the opportunity to commend the authors of this material for so ably documenting the biogas story and for the untiring efforts they have made. Commended also are the Tradesmen and Technicians of Nepal, without whose help much would have not been accomplished. This book is a testimonial to a joint venture of Nepali and Expatriate Cooperation at DCS in Butwal.

Kathmandu
January 1984

Al Schlorholtz
Economic Development Secretary
United Mission to Nepal.

BIOGAS RESEARCH AND DEVELOPMENT

PUBLICATIONS AND DRAWINGS

Available at the Development and Consulting Services, or the EDB Service Office, United Mission to Nepal, P.O. Box 126, Kathmandu, Nepal.

BOOKS AND REPORTS

United Mission to Nepal (1985) Biogas — Challenge and Experience from Nepal Vol. I and II.

Finlay, J. (compiler) (1981) Guidebook on Biogas Development. United Nations Energy Resources Development Series No. 21. Sales No. E. 80.II. F.10. (Available from the United Nations, Sales Section, New York or Geneva.

Paper reprints or microfiche available from National Technical Information Service, Springfield, Virginia, 22161, U.S.A.
The upper code is required for ordering reports. The lower code is a cost code, PC for paper reprints, and MF for microfiche on film.

Code No.	Report
PB83-162107 (PC A03/MF A01)	Finlay, J. (1978). Operation and Maintenance of Gobar Gas Plant. Finlay, J. (1980). 500 Cattle Dung Plants Built in Nepal in 5 Years: from Design Office to Field and Back Again. Paper presented at International Symposium on Biogas, Microalgae, and Livestock Wastes, Taipei. Finlay, J. (1978). Efficient, Reliable Cattle Dung Gas Plants. Paper presented at UN ESCAP.
PB83 - 166694 (PC A03/MF A01)	Pang, A. (1978). Economics of Gobar Gas. Dulmer, A. (1979). Community Gobar Gas Feasibility Study, Madhubasa. Dulmer, A. (1980). Initial Survey of Proposed Community Biogas Installation in Kusumgodai, Lumbini. Shrestha, P., and D. Fulford (1979). First, Second, and Third Inspection Visits to 95 Nepali Biogas Plants - 1976, 77, 79. Shrestha, P., and D. Fulford (1980). First Inspection Visit to 11 Dome-type Biogas Plants.
PB83 - 166991 (PC A04/MF A01)	Dulmer, A., and A. Schlorholtz (1979). Gobar Gas Survey in Nepal. Dulmer, A. (1980). A Survey of 3 Community Biogas Plants in Nepal. Fulford, D., & M. Peters (1978). Survey of Present Gobar Gas Work in India. Finlay, J. (1980). Night Soil Gas Plant.
PB83 - 166702	Fulford, D. (1981). Biogas, Farmers , and Development in Nepal. Fulford, D. (1978). Biogas in Nepal: State of the Art.
PB85 - 123305	Lau-Wong, M. (1982). Enhancement of Biogas Production in Cold Climate: Theoretical and Practical Aspects. Paper presented at the COSTED/UNESCO WORKSHOP ON THE MICROBIOLOGICAL ASPECTS OF BIOGAS PRODUDTION, Kathmandu, Nepal. May 31 - June 3, 1982.
PB85 - 123958	Lau-Wong, M. (1984). The Economics of Biogas Systems.
PB85 - 195477	Lau-Wong, M. (1984). The Development of Biogas in Nepal.
Paper Series:	Lau-Wong, M. (1985). Studies on the Dynamics of Biogas Processes. No. 1-5. (1) Modelling of Biogas Processes. (2) Analysis of the Kinetic Data of 3 Plant Designs Installed in Nepal and the Effect of Retention Time & Temperature. (3) The Effect of Slurry Moisture Content. (4) The Effect of Pressure on Gas Production. (5) Prediction and Optimization.

DRAWINGS

Floating Steel Drum Design — Drawing No.

(Nominal gas Production):	100cft	200cft	350cft	500cft
Gas plant constructn -straight type	D221/1	D228/0	D241/1	D161/1
Gas plant constructn -taper type	D225/0	D220/0	D239/1	D169/1
Gas Holder manufacturing details	D163/0	D164/0	D240/0	D256/1
Concrete floor constructn - straight	-	-	-	D168/1
Concrete floor constructn - taper type	D124/1	D125/1	-	D170/1
Water (condensate) removing device for gas pipes	D329/2	D329/2	D332/2	D332/2

Special Night Soil Plant, 350cft

Gas plant construction - straight type	D231/1
Gas holder manufacturing details	D230/0
Night soil plant site layout	2000-142/3

Fixed Concrete Dome Design

(Digester volume, m^3):	10	15	20	50 (not yet tested)
Gas Plant	D333/1	D334/1	D336/1	D335/1
Concrete dome constructn templates	D338/2	all same as $10m^3$		
Agitator (slurry mixer) manufacturing details.	D337/2	D337/2	D337/2	-

Extended concrete dome gas plant

Gas plant	2000-143/1
Steel moulds	2000-144/1

Tunnel Design

TP8 ($7.7m^3$) gas plant construction, using bricks for walls	D452/1
Gas outlet pipe, manufacturing details	D437/3
Gas outlet pipe, simplified, manufacturing details	2000-119/2

Steel mould for curved roof pieces, manufacturing details:
Frame 2000-114/2 Details of frame 2000-115/2 Base plate 2000-116/2

Appliances and Accessories

Hand tool for mixing slurry	D354/3
Slurry mixing machine construction	D229/2
Slurry mixing machine manufacturing details	D121/2 and D166/2
Gas burner, family size, 0.45 m^3 (16 cft) per hr.:	
manufacturing details	D221/1
castings	D222/2
Gas burner, large size, 0.90 m^3, plus 0.45 m^3	2000-111/1
Drain cock for condensate removal - galvanized iron pipe ($\frac{1}{2}$")	D453/3
- cast iron type ($\frac{1}{2}$")	D459/3
Main gas valve ($\frac{1}{2}$")	2000-108/3
Gas tap for connecting rubber pipe to burner ($\frac{1}{2}$")	2000-107/3
Gas pressure indicating guage 0-1300mm (0 to 51 inches)	D331/1
Gas lamp: assembly	2000-113/2
manufacturing details	2000-112/1
ceramic ventury	2000-118/4
Gas meter, acrylic plastic: rotor	D352/1
meter box and counter	2000-127/1
counter detail	2000-128/4

TABLE OF CONTENT

'Biogas — Challenges and Experience from Nepal' comprises two volumes: Vol. I is a practical guide for field workers, whereas Vol. II includes more theory and research work.
The authors of each chapter are listed below.

Vol. I

Ch.	Title	Author
1	Usefulness of Biogas Technology	David Fulford
2	Floating Steel Drum Design	John Finlay
3	Fixed Concrete Dome Design	David Fulford
4	Tunnel Design	John Finlay
5	Selection of Design, Size, Materials, and Site	John Finlay
6	Gas Piping and Accessories	John Finlay
7	Household Gas Appliances	John Finlay
8	Commercial Uses of Biogas	David Fulford
9	Starting, Operating, Servicing, and Safety	John Finlay
10	Improvements in Biogas Performance	Mamie Lau-Wong
11	The Economics of Biogas Systems	Mamie Lau-Wong
12	A Practical Guide to Community Biogas	Andrew Bulmer
13	Biogas Extension	David Fulford
14	Further Ideas for Biogas in Nepal	David Fulford

Vol. II

Ch.		
1	The Development of Biogas Technology	David Fulford
2	The Fundamentals of Biogas Process	Mamie Lau-Wong
3	The Effect of Operational Parameters on System Dynamics	Mamie Lau-Wong
4	Experimental Approach to Biogas Technology	David Fulford
5	Methods of Measuring Gas Production Parameters	David Fulford
5a	Experimental Techniques	Mamie Lau-Wong
6	Enhancement of Biogas Production in Cold Climate	Mamie Lau-Wong
7	Shape and Structure of Biogas Plants	David Fulford
8	Development of Community Biogas in Nepal	David Fulford

Cover Design : by Mamie Lau-Wong

226

Volume II

CONTENTS

Chapter	Title	Page
1	The Development of Biogas Technology	1.1
	Challenges of Biogas Technology	1.2
	Economic Challenges	1.3
	Technical Challenges	1.4
	Organisational Challenges	1.4
	Marketing Challenges	1.5
	Community Organisation	1.6
	Commercial Biogas	1.7
	Biogas Development in Nepal	1.7
2	The Fundamentals of Biogas Process	
	The Biogas Microflora	2.1
	Nutritional Requirements of Methanogens	2.6
	Biochemical Reaction and Kinetics	2.8
	Types of Biogas Processes	2.12
	Effluent as Fertilizer	2.17
	Effect of Anaerobic Digestion on Pathogens	2.20
	Properties of Biogas	2.23
3	The Effect of Operational Parameters on System Dynamics	
	The purpose of modelling	3.1
	Parameters Affecting Gas Output	3.1
	Modelling the Dynamics of Various Reactor Systems	3.2
	The Effect of Retention Time	3.6
	The Effect of Temperature	3.9
	The Effect of Moisture Content in Slurry	3.12
	The Effect of Pressure	3.13
	Discussions of Results	3.15
	Prediction and Optimisation	3.17
4	Experimental Approach to Biogas Technology	
	Follow-up	4.1
	Adaptive Research on Gas Storage Systems	4.1
	Displacement Type Biogas Plants	4.3
	Field Testing of Dome Plants	4.4
	Tunnel Plant Experiments	4.5
	Future Directions	4.6
	Lessons Learned	4.6
5a	Experimental Techniques	
	Total Gas Output	5.1
	Gas Composition	5.4
	Quantity and Composition of Input	5.8
5	Methods of Measuring Gas Production Parameters	
	Use of Gas Meters	5.13
	Measurement of Slurry Temperature	5.16
	Measurement of Slurry pH	5.16

Chapter	Title	Page
6	Enhancement of Biogas Production in Cold Climate	
	The Temperature Constraint	6.1
	Insulation — Temperature gradient of the earth insulating with local materials, plastic cover over insulation, vegetation	6.2
	Comparison of the effects of Composting and Insulation	6.6
	Solar Heating	6.7
	Utilization of Waste Heat from Engines	6.14
	Heat Loss Calculations	6.19
	Calculation for Heat Exchanger	6.21
7	Shape and Structure of Biogas Plants	
	Steel Drum Biogas Plant — Size and Shape	7.1
	Concrete Dome Biogas Plant — Size and Shape	7.4
	Tunnel Biogas Plant — Size and Shape	7.7
	Inlet Pits and Reservoirs	7.9
	Stresses on a Biogas Plant	7.9
	Stress Analysis for an Arch	7.9
	Stress Analysis for a Dome	7.11
8	Development of Community Biogas in Nepal	
	A survey of previous attempts	8.1
	Another Approach	8.2
	Allocation of Responsibilites	8.5
	Effectiveness of a Group Biogas System	8.6
	The Approach	8.7
	Decisions to be Made	8.8
	Siting of the Biogas Plant	8.9
	Financial Arrangements	8.10
	Irrigation of Land	8.10
	Effectiveness of a Village Biogas System	8.11
	The Effectiveness of the Original Assumptions	8.12

BIBLIOGRAPHY

Chapter 1. THE DEVELOPMENT OF BIOGAS TECHNOLOGY

D. Fulford

Biogas technology has not had a smooth history. While the idea of producing a fuel gas from cattle dung and vegetable wastes has been known since the end of the last century, it was regarded more as a scientific curiosity than of any use. The exception has been during times of war in Europe, when energy from other sources was limited. Otherwise, supplies of oil and electricity were cheap and plentiful, especially in the West, so further work on the development of biogas was considered irrelevant. The few small biogas programmes that did start in Europe, in France, West Germany and Italy, in response to energy problems during and after the Second World War, quickly faded away (van Brakel).

In the 1950s and 1960s, as part of a growing concern for the environment and for conservation on the part of a few enthusiasts who were questioning the fast growth philosophy of the Western nations, biogas again found a place. It became almost a symbol of the new "zero growth" approach to life, as a non-polluting, renewable energy resource, that could free men from their dependence on centralised energy, and its control on people's lives (NAI).

Unfortunately, the enthusiasm of these conservationists for biogas was based on the work of very few practical pioneers, who happened to publicise their results. L.J. Fry had built a plant is South Africa, that used the dung from 1,000 pigs to produce gas to run a 13 HP adapted diesel engine (Fry). Harold Bates, in Britain, used gas from chicken manure to run his car (Bell). The view of biogas was romantic and idealistic, but somewhat impractical.

One place where biogas technology remained a serious interest was at the Indian Agricultural Research Institute at Delhi (Idnani). Research and development work was inspired by a new sewage treatment plant near Bombay, in 1937. The work at IARI inspired Jashbai Patel,,as well as others, to design full-scale biogas plants that could be used by farmers. Unfortunately, even this work had its weaknesses: both the early IARI, "Delhi", and Patel, "Gramlaxmi", designs used a counterbalanced gas drum, which was supposed to increase gas production by keeping the gas under negative pressure. This system jammed easily and was potentially dangerous, as air could enter the gas holder and cause an explosive mixture (Singh).

The oil price rises of the early 1970s made the rest of the world begin to take the ideas of the conservationists more seriously, including the use of biogas technology. Unfortunately, they discovered that this "ideal" energy resource suffered from many problems (Pyle). Biogas enthusiasts had not considered the technical and other difficulties in setting up an unfamiliar technology. Early attempts to popularise biogas technology, either through small commercial concerns in the Western world, or through development programmes in the less developed countries, proved less successful than expected. The result of over-selling an idea that does not live up to expectation is disillusionment. Government planners and aid administrators became rather suspicious of biogas technology and were less willing to give it strong support. Even in India, where the biogas programme has usually had good support, there was a period in the late 1960s and early 1970s, when the programme had reduced priority and emphasis. Only in China has the early failures, apparantly, not stopped its enthusiastic adoption by large numbers of people (Thery). This may be changing (Tam).

Despite these initial set-backs, several groups have been prepared to face up to the practical problems of getting this appropriate technology from the stage of being a "good idea" to one in which it

has the potential to help people in developing countries. There is an increasing growth in the number of research programmes on biogas technology in different parts of the world, both in developed and developing nations (Bente, ECDC, UNESCO). In India, the programmes in the Khadi and Village Industries Commission, Bombay (Patankar) and in the Planning, Research and Action Division (PRAD), in Lucknow and Ajitmal (Lichtman), have been given a new impetus by the Indian government, and new programmes have started elsewhere (Reddy, TATA). Elsewhere in Asia, Taiwan has a research programme (Chung Po), as does Korea, Japan (Subramanian) and the Philippines (Maramba). The Environmental Sanitation Information Centre of the Aisian Institute of Technology in Thailand has a keen interest (Tan). The United States government has sponsored several research programmes (Jantzen) and efforts are increasing in Britain (Meynell), Germany (BORDA) and other developed countries.

Biogas is now being recognised for what it is: a useful new technology that is still under development, not a magical solution to the energy problems of the world. As this development work progresses, and new discoveries and inventions are made, biogas will have a small, but growing impact on world energy resources, especially in rural areas of developing countries that are not easily served by centralised power supplies, such as electricity.

1.1 Challenges of Biogas Technology

The problems that faced the early attempts to popularise biogas were not so much difficult, as unexpected and complex. Biogas, as a subject of academic study, is very difficult to define clearly, as it includes many different specialist subject areas. It is almost impossible to limit the study of the problems of biogas systems to any one of these areas.

The process by which biogas is made is microbiological as it uses methanogenic bacteria. The biochemistry of anaerobic fermentation is very complex and the details are far from fully understood (Zeikus, Wolfe, Mah). The practical problem of making cheap, but effective biogas plants is one of civil and mechanical engineering. A container must be constructed to hold the slurry of bacteria and feedstocks, and a system devised for catching and storing the biogas, as it is given off. Once biogas is produced, suitable, cheap gas appliances must be designed to use it.

The economics of biogas technology is very important; people will not use a new technology, however good, if it costs more than the alternatives. It also has sociological implications: biogas is called "gobar" gas in Nepal and India as "gobar" is the word for cattle dung. The cow is a holy animal to the Hindu, so gobar is an acceptable source for cooking fuel. Pig dung and human faeces are not acceptable feedstocks for a biogas plant for many Hindus, although the gases produced from them are the same.

Since biogas plants use animal dung and agricultural residues as feedstocks, and produce a fertilizer as well as a fuel gas, it may belong properly, to the subject of agriculture. The main users of the technology are farmers. The use of the effluent of a biogas plant brings in the subjects of soil science and horticulture. In China, where composting of all agricultural residues, including human faeces (night soil), is held in high esteem (FAO, van Buren), the use of biogas plants for producing good compost is more important than the fuel gas produced.

The organisation of a biogas programme, both for research and development and extension, has proved difficult (see Volume I, Chapter 13). In India and China, for example, large numbers of biogas plants have been

230

built, but the failure rate has been high. Over 90,000 biogas plants have been built in India (Ellegård). There were reports of about 30% failure rate in a survey conducted in Gujurat state in 1975 (Moulik). The problems of organising larger scale community and institutional plants seem to be even greater. The above study showed that only 6 out of 25 institutional plants, built for groups such as ashrams, were working, a failure rate of 76%. A major reason for failure quoted was a lack of interest by the concerned heads of the institutions. A much publicised community plant built by PRAD (with money from UNICEF) (PRAD) has run into problems of organisation (Roy), and the people have stopped using it.

When an organisation: a government department or an aid agency, plan to start a biogas programme, they are faced with a set of closely related problems that demand a very wide range of skills and experience to deal with them. A biogas team cannot employ experts to cover all the fields, so those involved in biogas technology must be "generalists", with skills in various fields.

1.2 Economic Challenges

The economics of biogas is an area which has received much attention (Pang, Barnett, Prasad, Makhijani etc.). While the running costs of a biogas plant are low, the capital costs per unit of energy produced is fairly high. This is a factor common to most alternative energy technologies, because the energy density in biomass, or wind or sunlight, is much lower than for coal, oil, nuclear energy or even hydropower. The physical dimensions of a plant to extract that energy must be larger per unit of energy produced. Conventional energy plants also rely on economies of scale to extract large amounts of energy in large centralised units. Alternative energy technologies tend to be diffuse; plants are very small and scattered, and this also increases the capital cost per unit of power produced.

Example 1.1

Approximately 0.33 litres of oil is used to produce 1 kW.hr of electricity, either in a diesel generator or in an oil-fired power station. The same energy requires 667 litres of biogas, from 60 kg of cattle dung or 120 litres of slurry (mixed with water). The biomass occupies 360 times the volume of oil for the same potential energy.

The cost of an oil-fired power station is roughly $1,900 per kiloWatt (1982 prices), for medium scale units (around 5 MW). The capital cost of a similar size of hydropower station is about the same.

A biogas unit, producing 2 cu.m of gas a day costs around $700 (in 1982). If this amount of biogas were used to drive a biogas fuelled generator set, it would produce 3 kW.hr per day. This gives a capital cost of $5,600 per kW, almost 3 times higher.

The above example does not include the cost of distributing the power from central power stations to rural areas. A biogas plant can be built in a rural village, where the energy is needed. If the costs of power transmission to rural areas is included, the capital ecomonics of biogas look much better (Prasad). In a study in South India (Makhijani), it is suggested that a biogas fuelled generator set could give electicity to villagers at 6 to 8 cents (US) per kW.hr, while electricity from a central coal-fired or diesel generating plant would cost 8 to 13 cents, at 1973 prices. Government subsidies, for both electricity and biogas, tend to upset this type of analysis.

1.3 Technical Challenges

Economics puts a severe constraint on technology. It is relatively easy to make a biogas plant that will produce biogas and fertilizer; there are many designs available. The more difficult task is to make a design of biogas plant that is both effective and cheap enough for potential users to afford. It may be possible to make one or two low cost plants, by using scrap materials, but the technology used in a national biogas programme must be reproduced for thousands of plants, and must be made by workmen with suitable training.

At the present time, it seems easier to make a complex technical unit than a simple one. Specialised materials, devices and control systems, including microprocessors, are available that allow units to be designed to do almost anything. Information on these new ideas is becoming more easily available. Most biogas units designed in the developed world, especially USA, Europe and Japan, tend to reflect this complex approach, with the addition of slurry pumps, temperature control systems and the use of specialised materials, especially plastics. While some of these designs are for research plants, where different parameters need to be automatically monitored, this whole design philosophy is inappropriate for rural areas of the developing world. Simplicity, low cost and the use of locally available materials are the priorities.

The design of appropriate technologies for rural farmers in a developing country demands a lack of sophistication. An appropriate technical unit has to be made from a limited selection of materials, which are also of variable quality and difficult to fit to defined specifications. It becomes difficult for designers and engineers to rely on design data and principles learned in a developed country. It is necessary to go back to basic scientific and engineering principles and start again. It can be argued that simple, appropriate technology demands more knowledgeable and better skilled scientists and engineers than the more sophisticated, but routine, technology of the developed world. Appropriate technologists not only need a wide knowledge, they also need a good understanding of the basics of their subjects.

1.4 Organisational Challenges

The advocates of appropriate technology tend to be engineers, so the technical side is often emphasised to the neglect of other areas, especially those of organisation and management. In the enthusiasm to develop a technology, such as biogas, and prove that it does work for local people, the management of a programme can be left to chance. In the words of a management consultant, who once visited DCS, the result can be a "crisis management situation".

In this approach to management, decisions are made only when they have to be, such as when problems occur. Since these problem solving decisions are not well planned, they can give rise to further problems, which require further decisions. These later decisions tend to partially conflict with the earlier ones, as they are made to overcome the problems resulting from these early decisions. The result is a series of 'crises' that become more difficult and frequent as the programme gets bigger and more complex. The neglect of well planned management in the early stages of a biogas or other appropriate technology programme, can give rise to administrative problems later on in the programme.

A well organised, well planned programme can work well, even if the technology is inadequate. The fast expansion of the programme in China, despite poor technology, is an example of this (Thery). The early Chinese biogas plant designs (van Buren) were poor and difficult to make gas tight, but the highly organised commune system allowed the programme to progress rapidly.

For an effective programme, both the technology and the organisation must be good. Ultimately, however, it is the organisation and management of a programme that determines its long-term success. A biogas programme, whether it involves only research and development, or extension as well, should be carefully planned in the early stages, as the programme is set up. The managers and technicians who are to be involved in the running of the programme should be appointed and trained early on in the planning process, so they can do the detailed planning of the programme. Technical and extension staff should be trained in administration, book-keeping and personnel management, as well as in the technical aspects of biogas, so they know how to run their various sections of the programme.

Once a good organisation has been set up and is running well, attention can be devoted to other aspects, such as the introduction of new technology or the setting up of new areas of work. Bad organisation means that administrative crises are always taking attention and energy away from other matters, so the progress of the programme is slowed, or even destroyed.

1.5 Marketing Challenges

An "appropriate technology" must be appropriate to the people who are to use it. While a new technology may seem impressive to the engineer who is developing it, the attitudes of the people who buy it are far more important. Many new technologies can be "solutions looking for problems".

Biogas has been publicised mainly as a domestic fuel, especially for cooking, but many people in a developing country see biogas as too expensive to be suitable for this purpose. The fuels that biogas replaces, such as wood, agricultural residues and dried cow dung, have a very low direct cash cost to the user, even though the long-term "cost" may be very high, in terms of deforestation and reduced crop production. If a local farmer uses biogas in place of these fuels, he cannot save the money, in cash, required to pay for the biogas plant.

The use of these traditional fuels has a high, long-term cost to the nation, as deforestation leads to soil-erosion and flooding in the monsoon, and drought in the dry season. Vegetable matter and dung, that should be returned to the soil to uphold fertility is being burnt (UNESCO). This national effect has been recognised by the Indian government for many years, in terms of 25% or even 50%, subsidies for biogas technology. His Majesty's Government of Nepal is also recognising the problem, and is giving subsidies for biogas as part of a programme to increase food production.

An alternative approach to the extension of biogas is to emphasise its relevance for economic development in rural areas. Biogas offers a supply of energy to rural areas that cannot hope to have energy from centralised supplies. Gas can be used to run engines which can be used for income earning activities, such as cottage industries and irrigation pumping. If this approach is adopted, farmers can earn income, as cash, from their biogas plants, which can be used to pay for the capital cost of the biogas plant and other equipment. This approach has been shown to work in practice (Volume I, Chapter 11 and Volume II, Chapter 9), even when some of the gas is being used for cooking.

The difficulty of this semi-commercial use of biogas is that a large size plant is needed, which requires the dung of many animals, or a large quantity of agricultural residues to run it. The majority of small farmers in developing countries do not have enough animals, or have access to enough suitable feedstocks, to set up such a plant on their own. The smallest size of dual-fuel engine that is commercially

233

available in India has a capacity of 3 HP (about 2.3 kW). This needs 1.3 cu.m of biogas an hour, or about 9 cu.m to run for 7 hours a day. A plant to produce this amount of biogas (an SD500 or an EP50) costs about $2,700 to buy in Nepal and requires 20 to 30 cattle to run it, if only cattle dung is used as a feedstock.

There are several ways in which such a semi-commercial biogas system could be run. An entrepreneur could set up the system, buying in dung and other agricultural wastes to run it, and selling fertilizer as well as the products of his cottage industry. Another way is for a whole community to run the cottage industry as a cooperative venture. Each family would contribute feedstocks and receive fertilizer, while also gaining the benefits from the semi-commercial enterprise.

1.6 Community Organisation

There is a growing interest in the concept of groups of people owning biogas plants as a cooperative venture (see also Chapter 9 and Volume I, Chapter 12). The effectiveness of such a group approach has yet to be proved in practive. Even institutional biogas plants have had poor success in India (Moulik), and the administrators of these institutions are more educated and motivated than village people and should be able to organise the use of the new technology.

The problems that face the organisers of community biogas projects are now being analysed more carefully (Roy, Bulmer), and they seem to result from a wrong approach by the implementing agency, rather than from technical difficulties, or even a lack of organisation within the community. The failure of the biogas project in the village of Fatensingh-ka-Purwah in Uttah Pradesh, North India (PRAD), for example, was mainly due to misunderstandings and confusions by the villagers as to their responsibilities in the project. A contributing factor to disagreements in the community over the plant were political and family divisions that had been present in the village long before the biogas plant was built (Roy).

The success, or otherwise, of community development projects depends very much on the approach of the agency implementing the project, especially on the attitudes of the extension agents who approach the community with a view to setting up the project, such as a community biogas plant. If a new technology is given to a village before they are ready to accept it, then they tend to resent it as coming from outside, and have little motivation to ensure that it continues to work. Too often, the challenge of community biogas has been only seen as a technical one, with the village people considered only as one variable in the total equation. A more successful approach must see villagers as real people with feelings and thoughts (Bhasin).

Village people should be helped to make a new technology their own. If they can be motivated to accept, or even desire, a new idea, even to the extent of putting a lot of work and even money (eg. through a loan) into the project, then they will be deeply committed to making the new system work.(FFHC).

Motivation takes a long time: villagers need to consider a new idea and really understand it and all its implications before they can make up their minds. They need to see the new technology in terms of their own situation; they need to know to what it commits them, what extra work and cost it involves and exactly how they would benefit from it. They need to be confident that the new system will actually help them and not be another expensive failure. Small farmers cannot afford to lose the little they have, and they are suspicious of new things that might be a drain on their meagre resources.

Community biogas can work, but only if it can be organised in a way that enables the village people themselves to be positive that they will gain from having and using it.

1.7 Commercial Biogas

The use of biogas as a fuel, within a commercial operation, is not new. Many sewage processing plants collect the gas given off by digestion and use it to run stationary engines and to run vehicles (van Brakel). This approach has been extended in China where wastes, collected from cities and the surrounding countryside, are digested in central digesters and used to run electricity generating units (Chen, UNIDO) Over 600 of these units have been set up (ITDG).

Another approach is to use wastes from processing industries, that can be digested to biogas to fuel the operation of that industry. This is being done in China; for example brewery wastes are being digested to form biogas to fuel the brewery (FAO). Research is continuing in Japan, USA and India to find ways in which wastes from paper mills, food processing units and other such industries can be used to supply energy instead of causing pollution (Ashare, TATA).

Integrated farming systems, that use biogas as an essential part of their operation are a fairly new idea, although Maya farms in the Philippines have been doing this for years (Maramba). In this system, a herd of animals, eg. pigs or cattle, is the basis for the commercial operation, while biogas, made from their dung, is used to supply the energy needs of the operation. The effluent from the biogas plant can be used to feed fish and ducks in ponds, as well as algae, which can be harvested as animal feed. The water from the ponds, containing the remaining effluent, as well as the waste from the fish and ducks, is allowed to overflow, to irrigate and fertilize vegetable plots and crops for animal feed. The principle behind an integrated farming system is to make the "waste" from one activity, the input to another (Xinbu, Yang, Soong).

On the more general level, biogas may be incorporated into the general running of an agricultural system. Energy is required to process crops and animal products: for threshing grain, dehusking rice, milling flour, making milk into cheese, butter and ghee. Energy is also required to pump irrigation water and to drive mobile machinery such as tractors. Biogas may be used to partially or wholly replace diesel or other fuels for these jobs.

1.7 Biogas Development in Nepal

The way biogas technology developed in Nepal, illustrates the multi-disciplinary nature of the subject. Many of the above points were discovered "on the way" and not even considered at the beginning.

The pioneer of biogas technology in Nepal was a Belgium, Father B.R. Saubolle, S.J., who was a teacher in St. Xaviers School in Godavari, at the edge of the Kathmandu valley. He built a demonstration plant in about 1955, run with dung from a small herd of cows owned by the school (Saubolle), as well as a smaller plant in his own home. It proved an attraction to many visitors, including local farmers, government officials (many of whom had sons at the school) and aid administrators. Two plants were built by people in Kathmandu, inspired by this example, and they are still running today.

In 1968, the Khadi and Village Industries Commission of India built a plant for an exhibition in Kathmandu, and gave it to the Department of Agriculture, HMG/N, so they could do experiments.

In 1974, the Energy Research and Development Forum, set up at Tribhuvan

University to advise HMG/N planners on energy issues, recommended that biogas be considered an alternative energy resource for Nepal (ERDG). The Biogas Development Committee was set up. The Department of Agriculture, with the cooperation of the Agricultural Development Bank of Nepal (ADB/N), made a programme to build 250 biogas plants during the "Agricultural Year" of 1975/76 (HMG/N). The Nepali financial year goes from mid-July to mid-July, while the calendar year is from mid-April. The Agricultural Year was the Nepali financial year of 2031/32.

The Department of Agriculture arranged for several workshops to make biogas drums according to the KVIC design of biogas plant from India. The extension agents (Junior Technical Assistants - JTAs) of the department were to act as sales agents, persuading farmers to buy these biogas plants, with a zero interest loan from ADB/N. The JTAs also had to find local builders to build the plants and obtain the steel gas drums from the manufacturers.

In 1974, the Development and Consulting Services of the United Mission to Nepal built 4 biogas plants to the Indian KVIC design. They were looking for new products that could be made in the Butwal Technical Institute's Mechanical Workshop (now formed into Butwal Engineering Works, Pvt, Ltd). A small demonstration plant, that was also made, was borrowed to be shown at an exhibition held to celebrate the Coronation of King Birendra in 1974.

During the Agricultural Year, BTI and DCS were asked to be contractors to make biogas drums and also to install biogas plants under the Department of Agriculture's programme. Other drums were made by Balaju Yantra Shala in Kathmandu and the Agricultural Tools Factory in Birgunj.

In the Agricultural Year, a total of 196 plants were built, according to the records. DCS built 95 of these, and helped with the installation of 14 more. During 1976 a joint 2-year programme: "Studies of Energy Needs in the Food System", was set up by the Department of Agriculture and American Peace Corps, with funds from USAID, which included a strong emphasis on biogas (Karki). 4 Peace Corps Volunteers were involved, mainly with the training of Nepali personnel in biogas and in the setting up of community biogas plants (see Chapter 9).

In 1977, DCS and ADB/N agreed to set up the Gobar Gas tatha Krishi Yantra Bikash (Pvt) Ltd. (2034), together with the Fuel Corporation of Nepal. UMN had a policy of setting up private limited companies, an organisational model that would allow local people to continue technical programmes on a self-supporting basis. The Company organisation was based on the DCS extension programme for the Lumbini zone of Nepal, of which Butwal was at the centre. The Gobar Gas Company set up Sub-Branch Offices and Sales and Service Centres in about 9 strategic places in Nepal, mainly in the Terai (plains).

The first few years of the biogas programme had shown up some technical weaknesses in the Indian KVIC design of biogas plant, so a Research and Development Programme was set up under DCS to try to improve biogas plant designs (see Chapter 2).

At the time of writing (December 1983), over 1,300 biogas have been built in Nepal, mainly by the Gobar Gas Company. The Company is continuing to build plants, at the rate of about 250 per year, although this number should be increasing. After a time of apparent disillusionment with biogas technology, the Department of Agriculture is offering subsidies for some biogas plants, as part of a programme to increase crop production in Nepal. They now see biogas digesters as important for improving the effectiveness of natural fertilizers, such as cattle dung and crop residues.

As in other places, biogas technology proved to be much more difficult to develop than expected, but it is now finding its place in Nepal.

Chapter - 2 The Fundamentals of Biogas Process

2.1 The biogas microflora

2.2 Nutritional requirements of metharogens

2.3 Biochemical reaction and kinetics

2.4 Types of Biogas processes

2.5 Effluent as fertilizer

2.6 Effect of anaerobic digestion on pathogens

2.7 Properties of biogas

M. Lau-Wong

Chapter 2 The Fundamentals of Biogas Process

2.1 The Biogas Microflora

In recent years tremendous effort has been initiated in the construction of biogas systems in various developing countries. However, disproportionate attention has been given to the ultra-structure and construction of plants while the study of the internal process is much neglected, partly because the latter is less straightforward and obscured by unknown factors. Nonetheless, a proper understanding of microbial interactions, nutritional requirements, bio-chemical reactions and kinetics of the process is a prerequisite to the choice of design and operation parameters (e.g. retention time, sulrry solid content) for maximising output.

Methane generation from insoluble complexes can be generalised into the following stages:

Anaerobic digestion with methane generation

Insoluble organic compounds

(e.g. lignocellulose, polysaccharides, carbohydrates, lipids, proteins)

↓ HYDROLYSIS

Soluble organic compounds

(e.g. oligo-saccharides, monosaccharides, short chain fatty acids, alcohol)

with formation of H_2, CO_2, and NH_3

↓ ACIDOGENESIS

Volatile fatty acids

(cont. next page)

238

(mainly acetic and propionic acids, with some formic and butyric acids)

↓

formic acid
HCOOH

↓

CO_2, H_2 ⟶ METHANOGENESIS Methane ⟵ acetic acid CH_3 COOH

Anaerobic digestion reduces the bulk of waste and sewage by solubilising the insoluble polymeric substances. The whole process can be visualised as a relay:

1. Hydrolysis performed by the first team of bacteria e.g. Clostridium thermocellum metabolises cellulose to glucose.

2. Acid formation by bacteria from the same or another group eg. Clostridium thermoaceticum converts glucose to acetic acid,

3. And finally, methane production from carbon dioxide and hydrogen.

These are three distinct stages and each group of bacteria has its own pH preference: neutral or slightly alkaline for hydrolytic and methanogenic bacteria, and acidic pH (4 to 6.5) for acid formers. A fermenting slurry develops its own buffer and it usually settles down to a compromising pH between 6.5 and 7. In peat bog where the pH is low (around 4), methane can still be detected.

Microbial interactions :

Methanogens thrive in mixed cultures but are difficult to isolate into pure cultures. This may be due to their strict anaerobic requirement, and probably to their need for microbial interactions.

229

Hydrolytic and acid bacteria can be facultative (live in the presence or absence of oxygen) or an aerobic (live in environment without oxygen), whereas methanogens are obligate anaerobes which are killed upon contact with oxygen. Aerobic and facultative organisms both utilise oxygen as terminal electron acceptor. In the absence of oxygen, the latter can also utilise nitrate or sulphate (in the case of sulphate-reducing bacteria). In a digester, these bacteria assist methanogen by exhausting oxygen from the environment. The methanogens are at the end of the relay and in return remove the acidic end products by converting them to methane. The interrelationships among these micro-organisms in the biogas or ecological systems are thus indispensable.

It is not surprising that for the first few days after start-up, the digester would have a negative pressure inside. Aerobes and facultative organism first deplete the oxygen, forming carbon dioxide which is more soluble than oxygen in the slurry. Thus the pressure is reduced. As the more slow growing metharogens thrive, they convert the carbon dioxide to methane, and as more insoluble carbon substrates are metabolised (a slow process as well), more methane is found. Gradually, a positive pressure is built up in the digester.

Significant interactions were observed in the presence of complex substrates when essentially methane, acetate, and carbon dioxide are found as the end products. But in the presence of simpler substrates, free hydrogen, carbon dioxide, acetic acid, and other end products such

240

as formate, succinate, lactate, and ethanol are formed, indicating a reduced role of methanogen in the interaction. (Zeikus, 1977).

Experiments have been performed to inhance methane production with microbial interactions. A mixed culture of specific bacteria and enzymes has been claimed to decrease the lag phase and hydrogen sulphide content of the gas produced, with gas production rate and methane content (over 87%) notably higher than other processes (Cumber Industries, Canada, personal communications). In China (Liu, etal, 1981) hydrogen-producing bacteria of the families Enterbacteriacea and Bacillaceae have been isolated and studied. When they are inoculated with an enriched culture of methane producing bacteria, the methane content increased remarkably to 80% in 1 week, whereas a control without the hydrogen bacteria had only 65% methane. The CO_2 also decreased to a level too low to be detected by gas chromatography.

Methanogenic Bacteria

Methanogens are strict anaerobes (killed upon contact with oxygen), non-spore formers; and their habitat includes garden soil, lake sediment, mud swamp, sewage sludge, ruminant feces, as well as gastrointestinal tracts of animals. Thermophiles have been obtained from thermal springs in the Yellow Stone National Park in the United States. Since methanogens are obligate anaerobes, indiscriminate exposure of digester slurry to air can seriously reduce the methanogen population.

From physiological and nutritional point of view, methanogens come from very diverse origins. It appears that they are linked together only by their common methane energy-generating mechanism. All methanogens can utlize hydrogen as the sole reducing agent in the energy releasing step of methanogenesis and in cellular synthesis; some can use formate and others eg. (Methanosarcina barkeri) methanol. In the energy generating process, oxidation of hydrogen is always coupled with the reduction of carbon dioxide, the terminal electron acceptor, to methane. All species can use carbon dioxide as the sole carbon source for cellular synthesis. Some can use carbon dioxide, while others use inorganic compound for energy. For example, Methanosarcina barkeri and some Methanobacterium can use carbon monoxide as energy substrate by first converting it to carbon dioxide.

The intergenus GC content is highly variable, and even within the genus Methanobacterium, it varies from 27.5% of M. arbophilicum to 52% of M. thermautotrophicum. They do not have cytochromes for electron transport, but all contain Coenzyme M (2-mercaptoethane - sulphonic acid) and a fluorescent pigment Factor 420, fluorescense occuring when its oxidised form is excited by ultraviolet rays. Owing to their diversity, methanogens are classified according to their ultrastructure into four genuses (Zeikus and Bowen, 1975).

242

Taxonomy of Methanogens : Family: Methanobactereace

Genus	Morphology	Substrate for energy and growth
Methanobacterium	rod shaped, often curved	H_2, CO_2, formate
Methanococcus	cocci, in pairs, single, or chains	H_2, CO_2, formate
Methanosarcina	irregular cell packets	H_2, CO_2, methanol, acetate
Methanospirillum	curved, forming helical filaments	H_2, CO_2, formate

2.2 Nutrient requirements of methanogens

Carbon, hydrogen, oxygen, nitrogen, sulphur, and phosphorus (C, H, O, N, S, P) are basic elements essential for the building up of cells and metabolism. In methanogens, carbon serves the additional purpose of being an electron acceptor ($CO_2 \rightarrow CH_4$). Nitrogen is a constituent of protein, enzymes, and nucleic acid, and is usually lacking in ligno-cellulosic materials.

Up until now, surveys on nutritional requirements of methanogens are limited to only a few species, and the role of vitamins for most species in largely unknown. For those studied, the effect of vitamins can be nil or stimulatory, required or not required. Yeast extract (1 g/l), folic acid (0.2 mg/l), Vit B6 (0.09 mg/l), and Vit B12 (0.001 mg/l) were stimulatory when acetate was used as substrate for methane generation (Parkin and Speece, 1980).

Methanogens invariably use only ammonium as a source of nitrogen, and nitrogen gas, amino acid, and other nitrogeneus compound cannot take its place. Amino acids can be stimulatory for some species like Methanobacterium ruminantium and Methanospirillum hungatti, but not for Methanobacterium thermoautotrophicum which is autotrophic. If urea is supplemented in the feed, it has first to be broken down by other microbes to ammonium before it can be utilised by the methanogens.

Sulphur at 0.85mM is essential for the degradation of cellulose to methane. Sulphide or cysteine can be utilised by some species whereas Methanosarina barkeri needs both. At 9 mM of sulphur, all inorganic sulphur compounds except sulphate inhibit both cellulose degradation and methane formation. (Khan and Trotter, 1978).

It was noted in some studies that stable methane generation was not maintained on an acetic acid - mineral salt medium until solids-free digested sludge was added. The sludge presumably provides some undefined growth factors for the methanogens. CoM, 2-methylbutyrate, and fatty acids like acetate are essential for rumen methanogens. (Zeikus et al, 1975).

2.3 Biochemical Reaction and Kinetics

In methane formation, carbon dioxide is reduced by hydrogen and the reaction common to all methanogens is :

$$CO_2 + 4H_2 \text{ --- } 2H_2O + CH_4$$

In the course of fermentation of complex substrates, volatile fatty acids such as acetic, propionic, butyric, and lesser amounts of formic, lactic and valeric acid are produced. The higher carbon acids are initially broken down to acetic and propionic acids which become the precurso s of about 85% of the methane generated. In an unbalanced process, these are also the acids that prevail (Tappounni, 1979). In sewage sludge, 70 - 80% of methane arises from H_2 - CO_2 and acetate. Interestingly, gaseous hydrocarbons such as ethane, propane, and butane are not produced, indicating that all metabolites are probably coverted to the same precursor of methane.

The details of the mechanism for the reduction of carbon dioxide to methane still remain to be elucidated. The discoveries of Coenzyme M or CoM and F420 did indeed shed some light on the understanding of the mechanism. They seem to be unique in methanogens. Tetrahyrofolate, B12, and CoM have been suggested as candidates for methyl group transfer (Stanier etal, 1976). However, the levels of formyltetrahydrofolate synthetase and methylene tetrahydrofolate dehydrogenese were too low to be of significance in the species studied (Stadman, 1967).

Vitamin B12 is high in sludge (about 3000 mcg/kg dry sludge) and it was postulated that B12 acts as methyl carrier for CoM for cells grown on methanol, with ATP providing the energy. More work is needed to confirm this (Baylock, 1968).

F420 is involved in hydrogen metabolism. Extreme sensitivity of methanogens to oxygen may be due to the oxidation of F420. In Methanobacterium ruminantium, F420 facilitates the oxidation of hydrogen and formate coupled with the reduction of NADP to NADPH. Barker (1956) proposed a unifying mechanism for the reduction of methanogenic substrate. Instead of being reduced by H_2 directly, they are bound to one or more carriers and reduced to methane with regeneration of the carrier. Later on, CoM was proposed as the carrier.

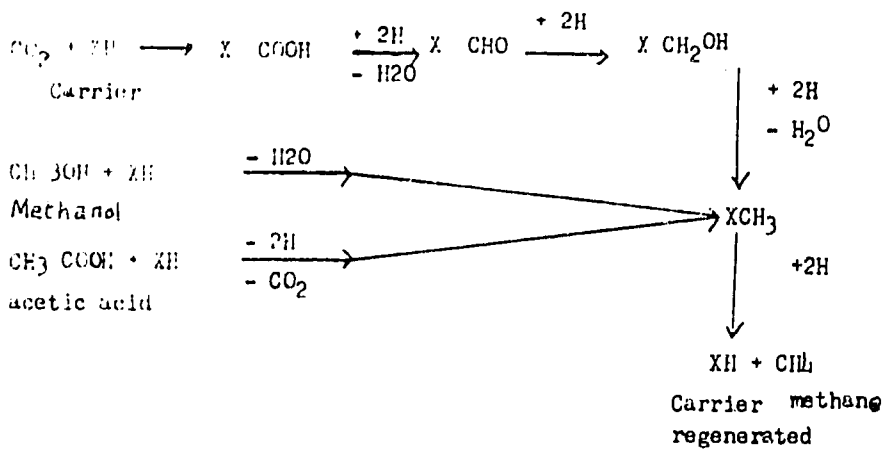

Using CoM as the carrier, Gunsalus (etal, 1976) proposed the refined version which is similar to above,

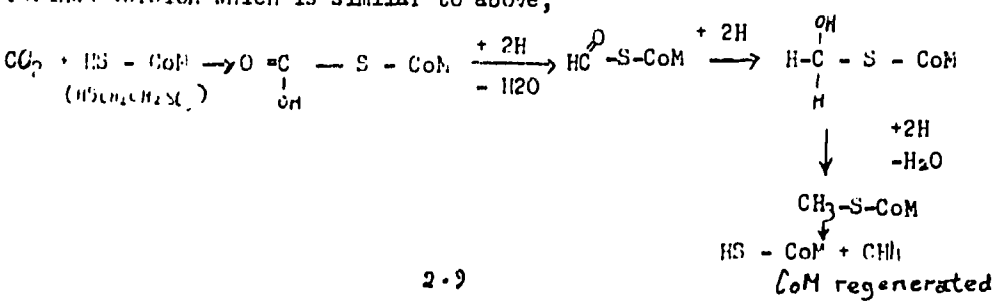

746

Thermophilic digestion enhances methane production rate since thermophiles have the fastest growth rates. Methanobacterium thermoautotrophicum has the shortest doubling-time (the time taken for cell population to double) of less than 3 hours at temperatures above 70°C grown in an inorganic mineral salt medium. Isolated from sewage sludge, it grew well up to 80°C (Zeikus and Wolfe, 1972). Doubling-time for Methanobacterium arbophilicum culture grown in mineral salt medium supplemented with vitamins is 10 hours ; for Methanospirillum hungati in a complex medium it is 17 hours. Under optimal cysteine and sulphur concentrations, the generation time of Methanosaccina barkeri is 7 - 9 hours. At mesophilic temperature (35°C), the doubling-time for methane fermentation of acetic acid is 33.9 hours. In high solid or dry batch fermentation of corn stover, the rate is 1.75 and 3.5 times faster at 55°C than at 35°C and 25°C respectively. The difference for wheat straw is not as dramatic (Jewell etal, 1981). The usual retention time of 1 month for digestion at mesophilic temperatures can be reduced to 1 week at thermophilic temperatures.

Kinetic studies help to determine the rate limiting step in the sequence:

Hydrolysis, acidogenesis, or methanogenesis. The specific growth rates, μmax, and generation or doubling time d, ($d = \ln 2/\mu Max$) for various phases and substrates were reported as follows:

Table 2.1 Kinetic Constants for different stages in anaerobic digestion

Substrate	Phase	μ max, hr^{-1}	d,hr	Temperature °C
glucose *	acid	0.30	2.3	36.5
sewage sludge *	acid	0.16	4.3	36.5
cellulose *	acid	0.07	9.8	35.0
acetic acid	methane	0.02	33.9	36.5
glucose #	acid	0.33	-	30°C, pH6
glucose #	acid	0.51	-	37°C (Optimum mesophilic)
glucose #	acid	0.71	-	52°C (Optimum thermophilic)

* Source = Ghosh and Klass, 1978

\# Source = Koet meyer, etal, 1979

Acid formers such as Streptococci and Bacteriods are more fast growing than methanogens. Thus for a balanced process, acid formation should be in step with its conversion to methane by the slow growing methanogens.

In digestion of simple carbohydrates such as glucose, sewage sludge, and cellulose, methane formation from volatile fatty acids is rate limiting since the corresponding specific growth rate is lowest, at 0.02 hr^{-1}.

For highly lignocellulosic compounds which are resistant to degradation by enzymes and limited in exposes surface, hydrolysis step can be limiting.

However, if the methanogen population is scanty and lacks viability, acid will accumulate and methane formation will be limiting instead.

Sometimes, thick slurry or scum formation at the surface can prevent rapid release of gas from the slurry. Studies are needed to compare the rate of release of gas to the rates of reaction.

2.4 Types of biogas processes

A close analogy can be drawn for fermentation in a biogas digester and that in the rumen of a ruminant. The gastrointestinal tract of a true ruminant is a complicated affair. It comprises the rumen-reticulum where feed is fermented, abomasum where enzymic digestive processes similar to that in monogastric take place , omasum where water and some nutrients are absorbed, and the intestines. The rumen microflora is similar to the biogas microflora, and ruminant feces should therefore contain the set of microbes required for methane generation.

One notable difference between digestion in a digester and digestion in a ruminant is that the living animal can regurgitate long pieces of fibrous feed, chew them down to a proper size for enzymic actions and reswallow them in ball-like boluses. Whereas fibrous substrate for a digester has to be first comminuted

artificially before feeding. The rumen is stratified into three layers - the top hardpack layer of long fibrous materials, the intermediate layer with ruminated feed, and the fluid layer of finer particles. Fermentation takes place in the intermediate and fluid layer. A biogas digester, which lacks the discrimination and co-ordinated actions of muscles in a ruminant, would be in serious trouble if it is stratified as in a rumen. This nevertheless can occur if long pieces of straw are added as substrates or the slurry is too diluted.

At the start-up of plants, a lag phase is almost inevitable when the microflora attempts to establish itself. In a batch process, in which no material enters or leaves except for gaseous products, the lag phase is followed by a period of maximum growth ($\mu = \mu_{max}$) called the exponential growth phase. Thereafter, the population declines as the death rate exceeds the growth rate. The lag period can be shortened if the batch is inoculated with the proper microbial culture.

Fig. 2.1 Growth in a batch process

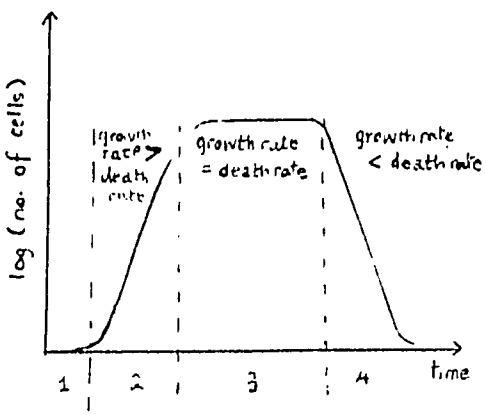

Stages:
1. lag phase, $\mu < \mu_{MAX}$
2. exponential growth phase, $\mu = \mu_{MAX}$
3. stationary phase, $\mu < \mu_{MAX}$
4. death phase

250

Other processes include the continuous stirred tank reactor (CSTR) which is highly popular in fermentation industries, and plug flow reactor in which mixing is restricted. In practice, the biogas systems encountered in laboratories and research stations are modified versions of these reactors. For the gas plants built in Nepal, feeding of substrate is semi-continuous, usually once a day, and mixing is not uniform since agitating devices may be absent or not in use.

The application of fixed film reactor or anaerobic filter for methane generation has been a recent development. These reactors are basically vertical columns filled with materials with large surface areas for the adherence of bacterial film. Chunks of glass, plastic, clay, stone or even bamboo rings have been tested as film adhering materials. Clay pipes provide excellent surface for film establishment. Glass gives the lowest rate and highest variability, and the film, once removed, was difficult to re-establish (Von Den Berg and Kentz, 1979). Substrate is pumped in from the top of downflow reactors, or pumped up in upflow reactors which act partly as fluidized bed. The rate at which the bacterial film is formed on the surface is variable, depending on the nature of the support material.

In one experiment, dilute pig slurry (below 1% total solid) was fed to an upflow reactor filled with limestone chippings. $90m^3$ biogas per day was produced from the $9.46m^3$ digester at a low retention of 0.5 to 5 days and temperature 30-35°C. Construction cost was low and

clogging was not a problem as long as the feed was low in solid content (Newell, 1979). In Thailand where bamboo rings ($1\frac{1}{2}$ inch diameter and 1 inch long) were used, bacteria developed as a thick black slime on rings and as flocs in the interstices in upflow reactor. Pig dung was first diluted and screened through 2mm sieve before feeding. After ten months of operation, there was no visual signs of degradation in the rings and their expected life is 2 - 3 years. One significance is that the low retention time (average 5 days) allows a smaller volume of digester, half the size of conventional ones, and construction cost was 30% lower (Chavadej, 1980).

In summary, the advantages of fixed film reactor are that agitation is not required, the rates of methane generation is high, and the retention time is low permitting the construction of a smaller and cheaper reactor.

As for disadvantages, this process is only applicable to low solid waste (less than 1%). Higher solid waste requires dilution and settlement of solids or sieving through screens. Unless this procedure is properly observed, the chance of clogging in the spaces between the supporting material is very high. A plant installed in China was clogged up after several months of operation (ASEET, 1981).

Another reason for the requirement of liquid feed is that diffusion of substrate to the bacterial film is more effective for soluble matters than solids. Lignocellulosic residues have low cell soluble matter (about 10 to 15%) and degradation proceeds more rapidly if microbes are adhered on it. The proximity decreases the time needed for diffusion of hydrolytic enzymes to the fibrous

substrate and diffusion of products back to the micro-organism. The low retention time and adherence of the microbes to supports in fixed film reactor are therefore unsuitable for highly insoluble lignocellulosic materials.

The use of fixed film reactors are also limited by the life expectancy of the supporting materials and the stability of the bacterial film. Films are usually slow to develop and difficult to reestablish after failure.

Two Phase Anaerobic Digestion

As methan generation from complex substrate is mediated by two groups of bacteria that have their own environmental preferences, seperating them in two phases can optimise conditions for both acidogenesis and methonogenesis. Acid formers have a faster growth rate than methanogens and the retention time needed to maximise both stages differ greatly. At 5% glucose the generation time for acidification and methanation are 3.6 hours and 36 hours respectively; that of Cellulose hydrolysis is even higher, at 1.7 days. A higher flow rate to satisfy the acid formers can therefore result in total washout of the methanogens.

In a two phase system daily methane production per kg VS is almost 4 times that of a one phase system and methanogens can cope with shock loadings of acids better in the second stage. Because of the slow growth ratio of methanogens, recirculation of biomass in necessary (Zoetemeyer etal, 1979).

Phase seperation can be simulated in a plug flow system, which theoretically allows no mixing of contents in different cross-sections of the longitudinal reactors. This process enables acid-forming bacteria to be enriched in the initial section of the reactor and methanogens in the latter part. The tunnel design operates only partially on the plug flow principle, since mixing caused by displacement of slurry destroys true plug-flow effect.

2.5 Effluent as fertilizer

The fertilizing value of effluent from biogas plants has been commented frequently in the literature, although field trials of its effectiveness compared to chemical fertilizer, manure, and compost have not yet been properly performed and documented. In the choice of plots for trials, care should be taken to note the nature and fertility of the soil, and avoid plots that have had a history of fertilizer application. Organic fertilizers tend to leave their residual effects in the soil; manure, biogas effluent, and compost can have effects lasting for two to three years.

During fermentation, carbon in the substrate is consumed. Part of it is incorporated into the microbial cells as building material and remains in the slurry while the rest is metabolised to methane, carbon dioxide, volatile fatty acids, or other soluble metabolites. The gases escape from the slurry, leaving it more dilute with less carbon and solid matter. Nitrogen, on the other hand, is assimilated into cells but rarely reduced to nitrogen gas in the system.

Although nitrogen fixing bacteria have been detected in some systems (El-Halwagi, 1980) the total amount of nitrogen remains fairly constant. Its concentration in terms of dry matter actually increases, not so much because of production by nitrification, but because of the net decrease in solid matter as fermentation proceeds. Table 2.2 lists some typical NPK values of manure and effluent obtained from our biogas plants in Nepal; note that the concentrations of nitrogen is almost 40% higher in the effluents.

Table 2.2 NPK values of manure and effluent, % by weight of air dried materials

Material	N	P_2O_5	K_2O	ash
Buffalo manure, fed on grass and rice husk	1.01	1.11	0.92	26.43 (n=3)
Effluent from dome-type plant	1.41	1.18	1.48	28.64 (n=6)
Effluent from tunnel-type plant	1.39	1.04	1.08	28.64 (n=4)

While the net amount of nitrogen fluctuates slightly, the forms it takes vary considerably. In most cases, there is more ammonia (20 to 50%) and less organic nitrogen in the effluent than in the manure substrate. In a report from Egypt (El-Halwagi, 1980) the quantity per unit volume of volatile fatty acids, phosphates, and ammonia increased. In fact ammonia doubled becoming 25% of total nitrogen. Organic nitrogen decreased by 20% but the amount per unit dry matter increased owing to the concentration effect described above. In other circumstances in the U.S. ammonia increased from ¼ to ½, whereas organic nitrogen was reduced from 3/4 to 1/2 of the net amount. In India, ammonia in the effluent was found to be between 15-10% of total nitrogen. (Subramanian, 1977).

Similar to manure, gas-plant effluent loses nitrogen in the form of ammonia if left outside for long before application. If it is too wet, leaching of soluble compounds especially nitrates will occur, and if too dry volatile compounds such as ammonia and volatile fatty acid will evaporate more readily. Furthermore microorganisms act on the urea and protein converting them to ammonia.

$$CO(NH_2)_2 + 2H_2O \longrightarrow (NH_4)_2CO_3 \quad \text{ammonium carborate} \qquad (1)$$

$$(NH_4)_2CO_3 \longrightarrow 2NH_3 \uparrow + CO_3 \uparrow + H_2O \qquad (2)$$

The second reaction is accelerated by high temperature and alkaline conditions.

In the Philippines, effluent from biogas plants fed with livestock wastes such as hog manure are treated in aeration lagoons for about a month. The purpose is to allow toxic compounds present in the effluent to decompose in the ponds before being applied to crops. (Maramba, Sr. 1978).

Toxic compounds include hydrogen sulphide and their successful removal can be indicated the attraction of insects to the treated slurry. In Nepal, where cattle and buffalo dung is the common feed, this procedure is not a necessity. We have encountered cases where frogs dwell happily in the effluent in the outlet pit and plants sending their roots down the inner sides of the outlet pit.

2.6 Effect of anaerobic digestion on pathogens

Another side benefit of biogas plant besides the provision of fertilizer is sewage treatment. In biological treatment of waste, the initial step known as primary treatment involves settling out of solids. In secondary treatment, suspended matter and soluble organic matter can be removed by one of the following methods :

1. Stabilization pond
2. Oxidation ponds or aerated lagoons, some with algae for providing oxygen. Cost is low and appropriate where land is available.
3. Activated sludge or continuous-flow aerated biological reactor, usually with recycling of sludge.
4. Fixed film reactor with downward or upward flow (see 2.4) Trickling or percolating biological filter is a special case with downward flow of substrate.
5. Anaerobic digestion with or without methane recovery.
6. Composting.

Time and temperature are the two important parameters governing the success of waste treatment. Fig. 2.2 depicts how the survival of different kinds of pathogens are related to these parameters. The upper right hand corner is the safety zone, where at a certain combination of temperature and time, all pathogens are virtually eliminated. The most resistant pathogens are enteric viruses and ascaris eggs; they are the last ones to be eliminated. In anaerobic digestion at 35°C and at a retention period of 20 - 30 days, the population of Ascaris eggs is substantially reduced but not totally destroyed. At 40 - 50°C , complete destruction is almost ensured. In a well-drained pit, storage for one year essentially eliminates all pathogens at low temperatures.

In a biogas digester, where the temperature is usually below 30°C and retention time between one and two months, removal of

pathogens from night soil is never complete, and caution must be taken to treat the effluent in stabilization ponds before application to crops as fertilizer. In China, inlet pipes are made to open near the bottom of the digester, so as to allow parasite eggs drop to the bottom and have longer retention periods. Even so, it was found in China that Ascaris or round worm eggs only loses 53% of their viability after 100 days.

Salmonella is another pathogen renown for its resistance to waste treatment. Studies done on S. heidelberg indicated that retention time and not so much pH is the crucial factor for extermination. There are conjectures that competition with other organisms in the digester threatens the survival of Salmonella. However, when Salmonella was inoculated into sterilised effluent from digesters, the viable counts dropped from 6×10^5 to 10^2 in two cases and zero in another, indicating compounds in the effluent itself are probably inhibitory to their growth. (Anaerobic Digestion Poster Papers, 1980).

Figure 2.2. Influence of Time and Temperature on Selected Pathogens in Night Soil and Sludge

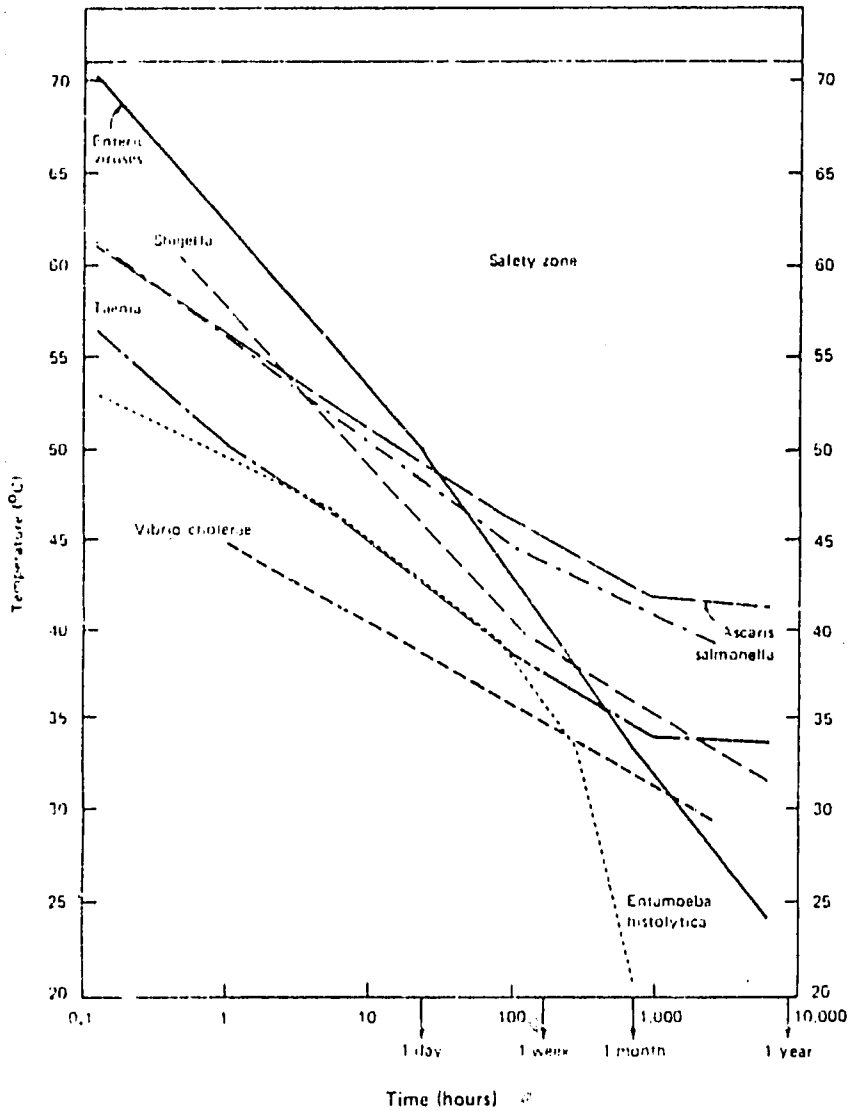

Note: The lines represents conservative upper boundaries for pathogen death — that is, estimates of the pathogen time-temp. combinations required for pathogen inactivation. A treatment process with time-temp. effects falling within the "safety zone" should be lethal to all excreted pathogens, with the possible exception of hepatitis A virus which is not included in the enteric virused in the fig. at short retention times.
Indicated time-temp. requirements are at least: 1 hour at $\geqslant 62^{\circ}C$, 1 day at $\geqslant 50^{\circ}C$, and 1 week at $\geqslant 46^{\circ}C$.

Source: R. Feachem and others, 1981.
Reproduced with permission from World Bank.

2.7 Properties of Biogas

Biogas usually comprises 50 - 70 % of methane, CH_4, and the rest is mainly carbon dioxide, CO_2. In the Indian subcontinent, biogas generated from gobar (cattle or buffalo dung) contains only 50 - 55% of methane. Small amounts of other gases such as nitrogen are also present. Hydrogen and carbon monoxide may be present, usually below 1%. The corrosive gas hydrogen sulphide H_2S is also produced in trace quantities by sulphatereducing bacteria.

Both Methane and hydrogen are combustible, though the contribution of hydrogen to the calorific value of the gas is negligible because of its small quantity. Removing the incombustible carbon dioxide would increase the calorific value of the gas.

261

Methane is well-known for its property of forming explosive mixture with air between 5 to 14% methane or 8.1% to 21.3% biogas (assuming 60% methane content). In enclosed space, violent explosions can occur. Accidents are not unheard of, but are usually induced by extreme carelessness such as lighting a flame inside an anaerobic digester or testing the combustibility of gas at taps situated in small pits. With a bit of knowledge and common sense, operation of biogas plants and appliances is rather safe.

Using biogas for cooking is as convenient as using butane gas, though in all cases, proper precautions such as adequate ventilation should be observed. Biogas contains a minute amount of hydrogen suphide, which is not only posionous but is also a nuisance because of its corroding action on engines and gas taps, especially those that contain lead. Hydrogen sulphide is characterised by its rotten egg odour and should not be inhaled unnecessarily. Above 10ppm, it starts to irritate the eyes and above 20ppm, the lungs and mucous membranes, and above 600ppm, death may occur. Unfortunately, olfactory (sense of smell) fatigue develops after prolonged exposure to the gas and its dangerous presence may not be detected.

Substrates with high amount of sulphur generate biogas with more hydrogen sulphide. The percentage of H_2S generated from cattle dung in Nepal is below 0.001% tested with the lead acetate method. The amount should not exceed 0.07% by volume when used for engines, or else it has to be scrubbed.

Powdered hydrated ferric oxide (rust) reacts readily with hydrogen sulphide forming ferric sulphide. Upon exposure to atmospheric oxygen, ferric oxide is regenerated; this reaction is very vigorous with tremendous heat generation and admittance of air should be controlled carefully.

$$Fe_2O_3 + 3\,H_2S \longrightarrow Fe_2S_3 + 3\,H_2O$$

$$2\,Fe_2S_3 + 3O_2 \longrightarrow 2\,Fe_2O_3 + 6\,S$$

Wet scrubbing can also be used, 3 volumes of H_2S in 1 volume of water at one atmosphere and 20°C. Carbon dioxide is also partially removed.

Vol. II
Chapter 3. THE EFFECT OF OPERATIONAL PARAMETERS ON SYSTEM DYNAMICS

3.1 The purpose of modeling

In order to enhance the performance of a biogas process and to prevent process failure, kinetic study of the dynamic behaviour of the system is indispensable. A common tool in kinetic study is the construction of mathematical models for describing the system's characteristics. Successful models enhance understanding of system behaviour by shedding light on the role and interactions of various operational parameters for the process. By adjusting the parameters, control of the process and prediction of system behaviour under different sets of conditions can be achieved accordingly. This ultimately leads to improvement of plant design and refinement of operational practices.

A model should reflect the essential features of the real process, but not be bogged down by trivial details. It should also be tested against real data. So far most good kinetic data have been generated from bench-scale reactors and pilot plants in research stations under carefully controlled environments. Field data, if existent, usually do not lend themselves readily to analysis. True, tests on gas plants operating under field conditions give more realistic results, but these same conditions create immense difficulties when one comes to data analysis. Many environmental factors are often beyond one's control: temperature and moisture content of substrate (eg. animal dung) vary from month to month and a true steady state of the system can never be achieved. Moreover, input quantities of dung and water are not measured out as exactly in the field as in research laboratories. All these factors together contribute to a greater degree of randomness in the data.

A simulation model on anaerobic digestion has been developed by Graef and Andrews for fine process control (1974). In our study of gas plant operation under field conditions in Nepal, where sophisticated facilities are lacking and feedback is minimal, it is more practical to use a less elaborate model but one that includes the essential operational parameters (such as temperature and retention time) that are still within our control and monitoring. In the following sections simple models for various plant types will be discussed.

3.2 Parameters Affecting Gas Output

In the literature, gas production from substrates is often given in terms of the unit weight of the substrate or volatile solids in the substrate. This presentation is too simplistic and sometimes quite misleading. Since output is dependent on numerous factors, such as temperature, retention time, input quality, concentration of substrate, slurry water content, pressure, pH and digester volume, it is crucial to specify the conditions and subject them to the same frame of reference before meaningful comparisons of diversified substrates can be made. If animal dung is used as feedstock, one must take into account its moisture content, which varies for different animal species and period of exposure after defecation. In a hot climate

of low relative humidity, dehydration of dung occurs rapidly, especially under sunlight. The same applies to plant feedstocks which vary in water content and digestibility at different stages of maturity.

3.3 Modelling the Dynamics of Various Reactor Systems

Biogas systems encountered in research stations, laboratories or in the field usually adopt one of the following basic designs:

1. Batch Reactor - from which nothing is removed (except gaseous products) and to which nothing is added after the initial inoculation of medium.
2. Completely Mixed Continuous Stirred Tank Reactor (CSTR) - also known as Chemostat, to which substrates, and possibly cells, are continuously fed and from which effluent is constantly removed.
3. Semi-continuous Mixed Reactor - similar to CSTR, except that substrate is fed at intervals and mixing may be intermittent.
4. Plug Flow Tubular Reactor (PFTR) - a longitudinal or pipe-like reactor to which feed is fed and effluent is removed continuously. In the ideal case, there is no variation of axial velocity over each cross-section. Ideal plug flow can be approximated by the movement of fluid through large pipes or channels. At each plane of the channel, fluid moves at constant velocity with no mixing or interaction with fluid in the neighbouring plane.
5. Horizontal Displacement Reactor - a modified version of the PFTR that allows mixing by displacement of slurry between digester and outlet pit. Input is semi-continuous. An example is the Tunnel design.
6. Fixed Film Reactor or Anaerobic Filter - a vertical reactor filled with supporting material which has a large surface area for the adherance of bacterial films. The substrate is pumped either up or down; agitation is eliminated; and it is more applicable to dilute non-particulate substrates (see Ch. 2.4).

Modelling of the Batch Process

At the end of a lag period (where $t = t_o$), the rate of disappearance of the substrate is proportional to its concentration:

$$\frac{dS}{dt} = -kS. \qquad \text{(See Table 3.1 for notation.)}$$

Integrating, with $S = S_o$ at $t = t_o$:

$$S = S_o\, e^{-k(t-t_o)}.$$

At the end of the Retention Period R :

$$S = S_o\, e^{-k(R-t_o)}.$$

The substrate converted between the time: $t-1$ and t is:

$$S_{t-1} - S_t = S_o\left[e^{-k(t-t_o)}\right].(e^k - 1).$$

This value, the daily amount of substrate converted, is variable and dependant on t, being smaller as time increases (Figure 3.1)

The gas produced daily (between $t-1$ and t) is:

$$G = C_1\, C_2\, f\, (S_{t-1} - S_t)\, V$$
$$= C_1\, C_2\, f\, V\, S_o\left[e^{-k(t-t_o)}\right].(e^k - 1).$$

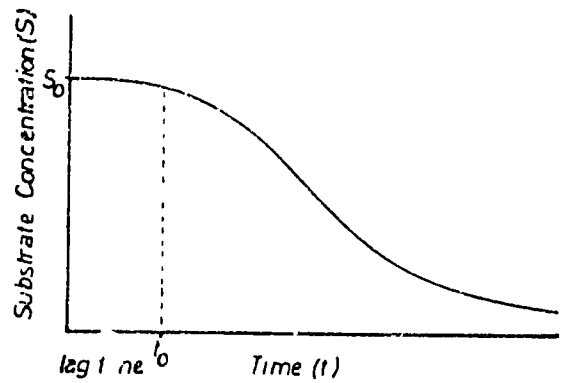

Figure 3.1 Batch Process: Substrate Concentration vs. Time

Modelling of the CSTR Process

At steady state, the substrate concentration S in the reactor is constant and equal to that in the effluent (Figure 3.2).

Doing a mass balance on the substrate in the reactor:

Mass in - Mass out = Mass converted in the reactor:

$$F(S_o - S_e) = kSV = kS_eV,$$

or: $S_o - S_e = kS_eR$, since $R = \frac{V}{F}$

$$\therefore \quad S_e = \frac{S_o}{1 + kR}$$

$$\text{Rate of Gas Production (G)} = C_1 C_2 f (S_o - S_e) F$$

$$= C_1 C_2 f V \frac{S_o k}{1 + kR}$$

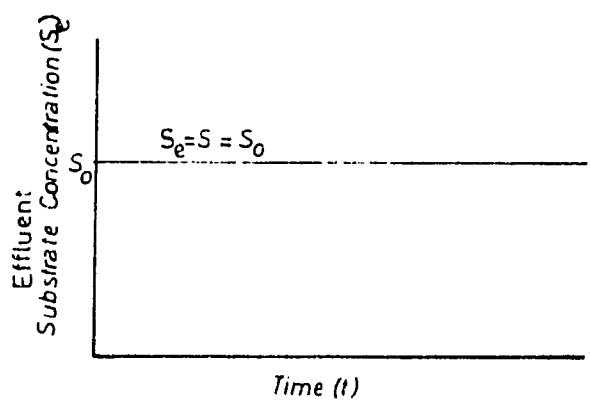

Figure 3.2 CSTR and Semi-CSTR: Substrate Concentration in effluent vs. Time.

Symbol	Meaning	Units
S_o	Initial Concentration of Substrate: in feed for batch processes, in influent for continuous processes.	$kg.m^{-3}$
S_e	Substrate Concentration in Effluent	$kg.m^{-3}$
S	Substrate Concentration in Reactor	$kg.m^{-3}$
R	Hydraulic retention time	day
F	Flow Rate of contents in Reactor	$m^3.day^{-1}$
V	Working Volume of Reactor	m^3
$\langle VS \rangle$	Volatile Solid Content of Substrate (organic matter)	kg
f	fraction of Volatile Solids in Substrate=1-ash fraction	-
G	Rate of Gas Production (usually at STP)	$m^3.day^{-1}$
C_1	Gas Output per Unit Mass of Digestable $\langle VS \rangle$	$m^3.kg^{-1}$
C_2	Fraction of digestible volatile solid in substrate	-
p	Interval between feeding of Substrate in semi-continuous reactors	day

Table 3.1 Symbols Used in the Mathematical Models

Modelling of a Semi-Continuous Mixed Reactor

A Semi-continuous process combines features of both continuous and batch reactors. Substrate is fed at intervals p , and for simplicity mixing is assumed to be accomplished instantaneously. At steady state, substrate concentration in the effluent is constant (Figure 3.2), but the concentration S inside the reactor fluctuates with time (Figure 3.3).

S is highest immediately after input, denoted: S_a

S is lowest right before input, denoted: S_b

Let the amount of input at each period be: V_o

Retention Time: $R = V / \frac{V_o}{p}$ or: $V_o = \frac{V\,p}{R}$

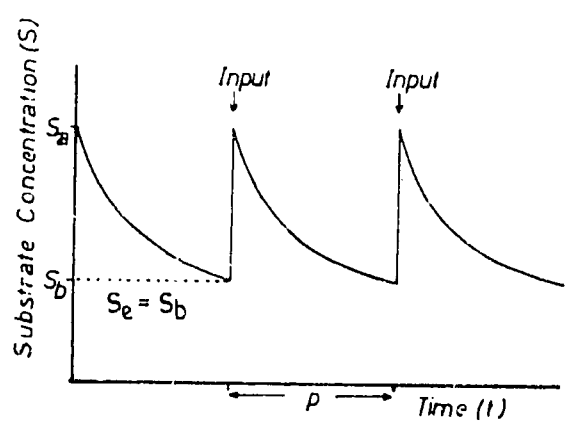

Figure 3 .3 Semi-continuous Mixed Reactor: Substrate Concentration in reactor vs. time.

267

In the event of input of substrate, effluent of a volume V_o and of concentration $S_e = S_b$ is displaced from the outlet, before it has a chance to mix with the incoming fresh substrate.

After mixing of the influent with the reactor slurry, each having substrate concentration S_o and S_b and volume V_o and $(V - V_o)$ respectively, the resultant concentration of the mixture is:

$$S_a = \frac{S_o V_o + S_b (V - V_o)}{V} = \frac{S_o p}{R} + S_b \left(1 - \frac{p}{R}\right) \quad \ldots (1)$$

After each input, however, fermentation proceeds batchwise and S_b is related to Sa by the batch equation:

$$S_b = S_a e^{-kp} \quad \ldots . (2)$$

Solving for S_b from (1) and (2) gives:

$$S_b = \frac{S_o}{e^{kp} - 1 + \frac{p}{R}} \left(\frac{p}{R}\right) \quad \ldots (3)$$

Usually when the period p is small compared to the retention time R, the expression (3) for S_b can be simplified.

$p << R$ is equivalant to $\frac{p}{R} \to 0$; Since R is finite, $p \to 0$.

$$\lim_{p \to 0} S_b = \lim_{p \to 0} \frac{S_o}{\left(\frac{e^{kp}-1}{p}\right) + \frac{1}{R}} \frac{1}{R}$$

Applying L'Hôpital's rule to $\lim_{p \to 0} \left(\frac{e^{kp} - 1}{p}\right)$ gives k,

and $$\lim_{p \to 0} S_b = \frac{S_o}{\left(k + \frac{1}{R}\right) R} = \frac{S_o}{1 + kR} .$$

This gives the same substrate concentration as in the effluent from a CSTR. Therefore if the retention time is long compared to the feeding interval p , a semi-continuous process can be approximated by a continuous one.

Rate of Gas Production, G:

$$G = C_1 C_2 f \left(\frac{S_o - S_e}{R}\right) V = \frac{C_1 C_2 f V S_o}{R + \frac{p}{(e^{kp} - 1)}}$$

Again, as $\frac{p}{R} \to 0$, $$G = \frac{C_1 C_2 f V S_o k}{1 + kR}$$

Modelling of the PFTR Process

A plug flow process can be visualised as a batch process with the time axis in the batch reactor translated to a length axis in the tubular reactor. By transforming time t , to length l , the graph of reactor substrate concentration (Figure 3.4) is identical to that of a batch (Figure 3.1).

t and l are related by the relationship:

$t = \frac{l R}{L}$ where L is the total working length of the tubular reactor.

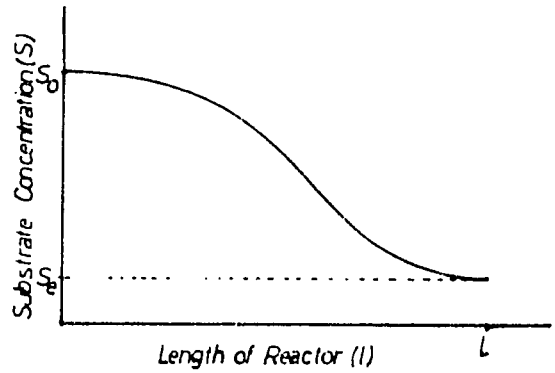

Figure 3.4 Plug Flow Reactor: Substrate Concentration vs. Length

At steady state, effluent substrate concentration S_e, is constant and is given by:

$$S_e = S_o e^{-kR}$$

On the other hand, concentration in the reactor S varies at different cross-sections along the length of the reactor, but is independant of time at steady state.

Rate of Gas Production:

$$G = C_1 C_2 f \left(\frac{S_o - S_e}{R}\right) V$$

$$= C_1 C_2 f V S_o \left(\frac{1 - e^{-kR}}{R}\right)$$

Modelling of the Semi-continuous Plug Flow Reactor

Derivation is the same as that for the PFTR, as long as there is no mixing of fresh substrate with the reactor contents.

4 The Effect of Retention Time

In the optimisation of a biogas process, differentiation between rate and efficiency is important. Both are intimately related to retention time, and in a process, one but not both, can be maximised. Rate of substrate conversion and rate of gas production are proportional and either can be used to specify the rate of the process.

Specific Gas Production Rate: $g = \frac{G}{V} = C_1 C_2 f \left(\frac{S_o - S_e}{R}\right)$

Substrate Conversion Rate: $r = \frac{S_o - S_e}{R}$ per unit reactor volume

The <u>rates</u>: g and r are therefore related by the constants:

$C_1 C_2 f$ which depend only on the nature of the substrate.

Dilution rate D and retention time R are related by:

$$D = \frac{1}{R}.$$

It can be shown by kinetic analysis that as D increases or R decreases, conversion rate increases until a maximum is reached; after that, for a further increase in D, a precipitous drop in

the rate follows, plummeting to zero as wash-out occurs (Figure 3.6)

The efficiency of substrate conversion can be represented by gas production per unit volatile solid:

$$g' = \frac{\text{daily gas production}}{\text{daily VS input } (\overline{VS})} = \frac{G}{\langle \overline{VS} \rangle}$$

$$= \frac{GR}{f\,V\,S_o} = C_1\,C_2\,f\,V\left(\frac{S_o - S_e}{R}\right)\frac{R}{f\,V\,S_o}$$

since: $R = \frac{V}{F} = \frac{V}{\frac{\langle \overline{VS} \rangle}{f\,S_o}} = \frac{f\,V\,S_o}{\langle \overline{VS} \rangle}$,

So: $g' = C_1\,C_2\,f\left(\frac{S_o - S_e}{f\,S_o}\right)$.

Substrate conversion efficiency: E, is defined by:

$$E = \frac{S_o - S_e}{f\,S_o},$$

Thus: $g' = C_1\,C_2\,f\,E$ and g' and E are related by the constants: $C_1\,C_2\,f$.

For the CSTR and its approximations: $S_e = \frac{S_o}{1 + kR}$

Substituting for S_e: $E = 1 - \frac{1}{1 + kR}$ and as $R \rightarrow \infty$, $E \rightarrow 1$.

Therefore, the higher the retention time, the greater the efficiency; but then substrate conversion rate is traded off in favour of efficiency. Normally, when substrate is abundant, one would optimise the process by operating at the retention time that gives the maximum rate. But when substrate is scarce and gas consumption rate is below the

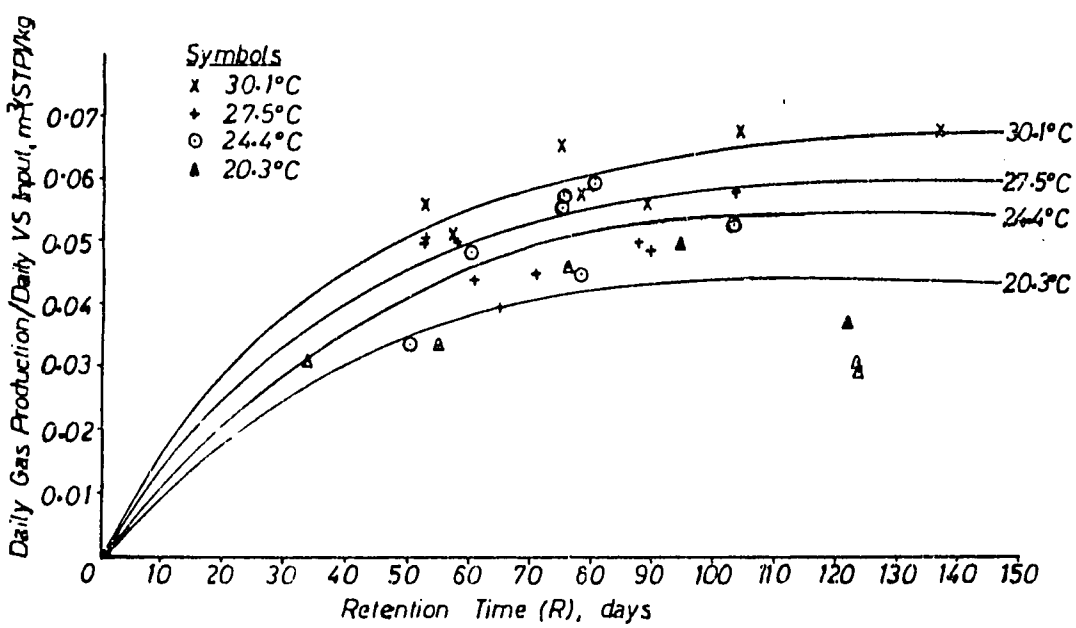

Figure 3.5 Gas Output per unit Volatile Solids Input vs. Retention Time.

maximum gas output rate, more of the substrate can be consumed (ie. the efficiency can be increased) by extending the retention time.

As an illustration, the gas output (at standard temperature and pressure) per kilogram of volatile solids in buffalo dung is given in Figure 3.5 for different tempertures. The data were collected from semi-continuously fed biogas plants (of the steel drum, concrete dome and tunnel designs) operated for a period of two years. As retention increases, gas production per unit volatile solids and consequently efficiency tend to level off asymptotically.

In Figure 3.6, the rate of gas production was plotted against retention time. For comparison of cases with different substrate input and slurry moisture content, the rate was obtained by dividing daily gas output by substrate concentration and reactor volume. The cur ves for different temperatures, ranging from 20°C to 30°C are convex, reaching maximum at their respective retention time R_{max}. The curves slope gently beyond the maximum, as retention time exceeds R_{max}. On the other side of the maxima, however, the curves drop precipitously, signifying wash-out of the microflora. At the temperature range shown on the graph, R_{max} occurs between 20 and 30 days. At higher temperatures, R_{max} is lower, so the plant can be operated

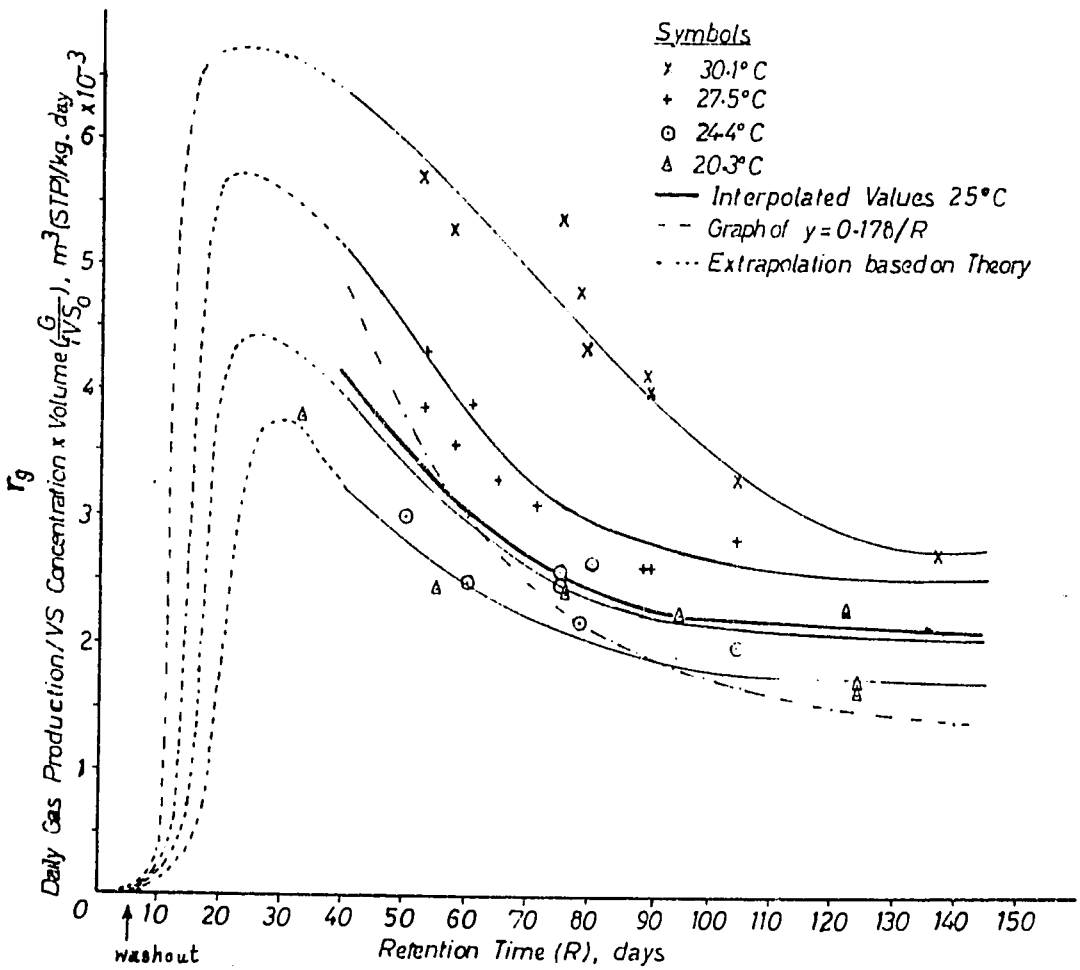

Figure 3.6 Rate of Gas Production vs, Retention Time

271

at a lower retention time.

The data points obtained from the field trials all lie on the gentle slopes of the graph. The reason is that, for operation of plants in villages, the adoption of a retention time close to the maximum is not advisable, since a decrease in temperature can shift R_{max} to the right, resulting in a wash-out.

3.5 The Effect of Temperature

The reaction rate of a biogas process is strongly dependant on temperature. The relation can be described using the Arrhenius equation:

$$k = A \exp\left(\frac{-E_{act}}{RT}\right)$$

where: k is the reaction rate constant,
A is the frequency factor, a constant for the reaction,
E_{act} is the activation Energy,
R is the Gas Constant ($\approx$ 8314 Joules.kg.mole^{-1}.^{o}K^{-1}),
T is the Absolute Temperature (^{o}K).

This equation can be transformed to:

$$\ln(k) = \frac{-E_{act}}{RT} + \ln(A)$$

A plot of ln(k) against $\frac{1}{T}$ will give a straight line with slope: $\frac{-E_{act}}{R}$ and intercept: ln(A). These constants can therefore be determined experimentally by measuring k at different tempertures.

For a biological system, straight-line-relationship holds as long as the temperature is within the normal range that can be tolerated by the system. At high temperatures, denaturation of proteins and enzymes and eventually death of cells will occur.

Micro-organisms can be roughly divided into three catagories according to their temperature preferences:

Psychrophilic (cold loving) organisms usually have their optimum growth tempertures below 15°C, and may still grow at 2°C, but at a much slower rate.

Mesophiles (middle loving) have their temperature optima between 20°C and 40°C; most biogas plants are operated in the mesophilic range.

Thermophiles (heat loving) usually have their temperature optima above 45°C.

If the interval between feeding is short compared to the retention time R, the semi-continuous mixed process can be described by the equation:

$$G = C_1 C_2 f V \frac{S_o k}{1 + kR} \quad \text{from section 3.3}$$

Rearranging to determine C_1C_2 and k:

$$R = C_1 C_2 f \frac{V S_o}{G} - \frac{1}{k} .$$

R and S_o are adjustable parameters in the process and the dependant variable G, the daily gas production, can be measured experimentally. The fraction of volatile solids or organic matter f, can be obtained by ashing the substrate at high temperature. The product of the two unknown constants: C_1 and C_2 and the kinetic constant: k can therefore be found from gas production measurements by plotting a graph of R verses the variable $\frac{f V S_o}{G}$. The slope gives C_1C_2 and the intercept $(-\frac{1}{k})$.

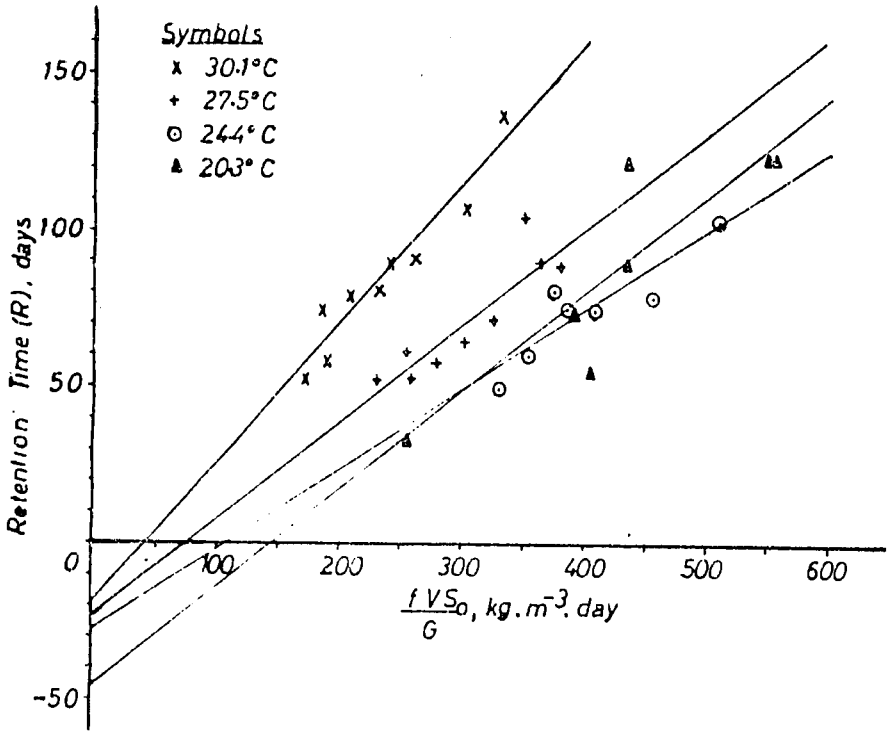

Figure 3.7 Plot of Kinetic Data as a Straight Line Graph

Data were recorded for various types of biogas plants, operated over a period of two years and plots were made for 4 temperatures of the above variables. The value of V, was taken to be the mean slurry volume for displacement digesters, where the slurry volume varies with the volume of gas stored. The plots were made for 30.1, 27.5, 24.4, and 20.3°C and the least squares method was used in obtaining the regression equations and unknowns: C_1C_2 and k. The results are shown in Table 15.2 and plotted in Figure 3.7.

T (°C)	C_1C_2 (m^3/kg dVS)	k (day^{-1})	r	f	Regression Equation
30.1	0.45	0.052	0.95	0.73	R = 0.33 X - 19.34
27.5	0.31	0.044	0.90	0.74	R = 0.23 X - 22.73
24.4	0.25	0.036	0.91	0.61	R = 0.15 X - 27.78
20.3	0.31	0.022	0.88	0.74	R = 0.23 X - 45.45

Table 3.2 Regression Analysis of Kinetic Data from Field Plants

$$X = \frac{V\,S_o}{G}$$

f is obtained from ashing dung at 550°C for 4 hours.

The correlation coefficient r is high in all cases and the model, though simple, can be used to explain the relationship of the rate of gas production and the other factors in most cases.

When ln(k) is plotted against $\frac{1}{T}$, a straight line regression is obtained: Figure 3.8.

273

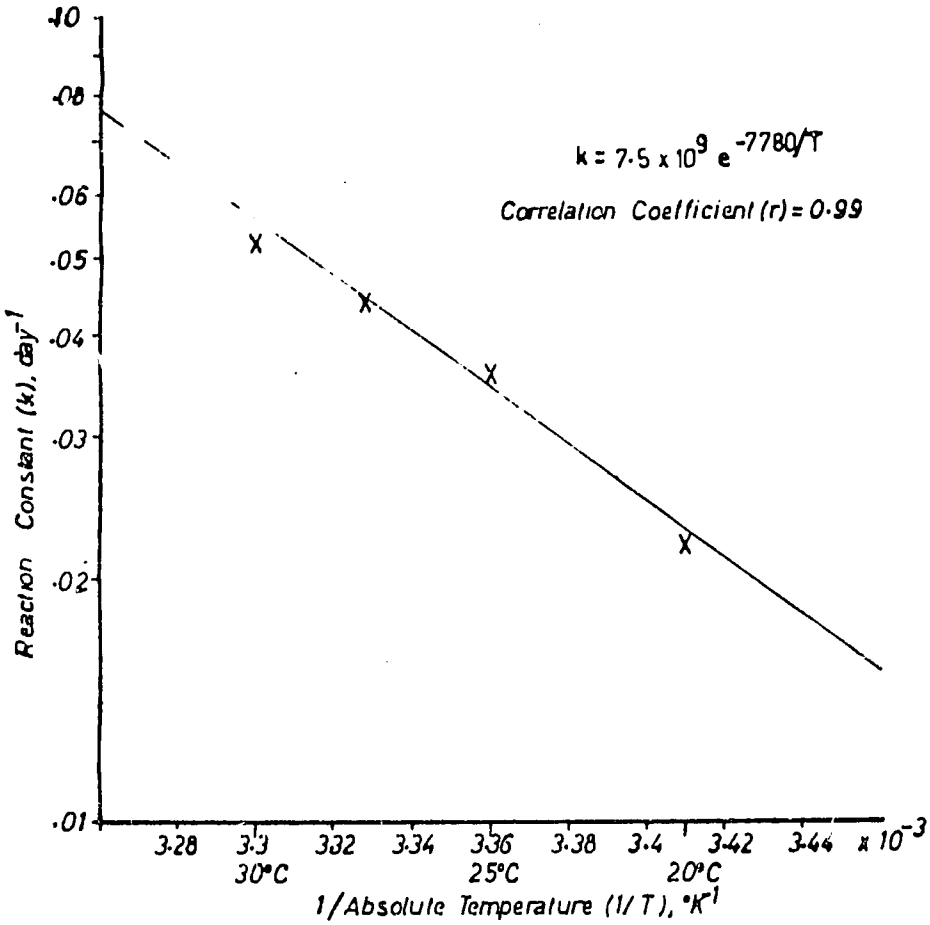

Figure 3.8 Reaction Constant vs. Inverse of Absolute Temperature

Using the least squares method: $A = 7.5 \times 10^9$ and $\frac{E}{R}act = 7780$:

$$k = 7.5 \times 10^9 \exp\left(-\frac{7780}{T}\right)$$

The correlation coefficient r is very high (0.99), showing the strong relationship between the reaction rate constant k and temperature T.

In the southern plains (the Terai) of Nepal, a decrease in digester temperature from a summer maximum of 31°C to a winter minimum of 20°C can cause a reduction of k by 60% and a reduction of daily gas output by 30% to 50%.

Note that the values of C_1C_2 or in fact C_2 depend on temperature and the nature of the feed. The higher the lignin content in the feed, the lower the fraction of digestible volatile solids since lignin is hardly decomposed anaerobically. The quality of the feed varies all year round, being poorest during the dry season when the animals feed on straw or whatever scrubby vegetation that is left. Thus the values of C_1C_2 shown in Table 3.2 appear to have no obvious relationship with temperature.

3.6 The effect of moisture content in slurry

There has been much speculation on the effect of thick slurry (high total solids or low moisture content) on gas output. Experiments performed in India on batch systems ranging from 5% to 12% initial total solids, showed that total gas output (over a period of 4 weeks) is maximum between 7% and 9% solids (Idnani et al, 1974). Below 5%, seperation of solids occurs and at 12% solids, gas output was only 60% of that at 8% after 4 weeks. It was explained that the high concentration of solids delayed fermentation and the corresponding high viscosity prevented rapid evolution of gas.

In another study, methane production from mesophilic anaerobic fermentation proceeded relatively uninhibited at high solids content below 30%. In fact, the rate of conversion and efficiency were about equal at 10% and 20% initial solids. Neither the rate nor the efficiency were significantly inhibited by solids content up to 32% of the total wet weight. However, when a 40% value was reached, methane formation almost ceased (Jewell et al, 1981).

These results prompted the use of semi-solid or high solid batch fermentation for methane generation by the Jewell group. Since more gas is produced per unit volume, a smaller reactor is possible. More heat is also generated per unit volume and in cool regions, a small reactor volume would require less insulating material.

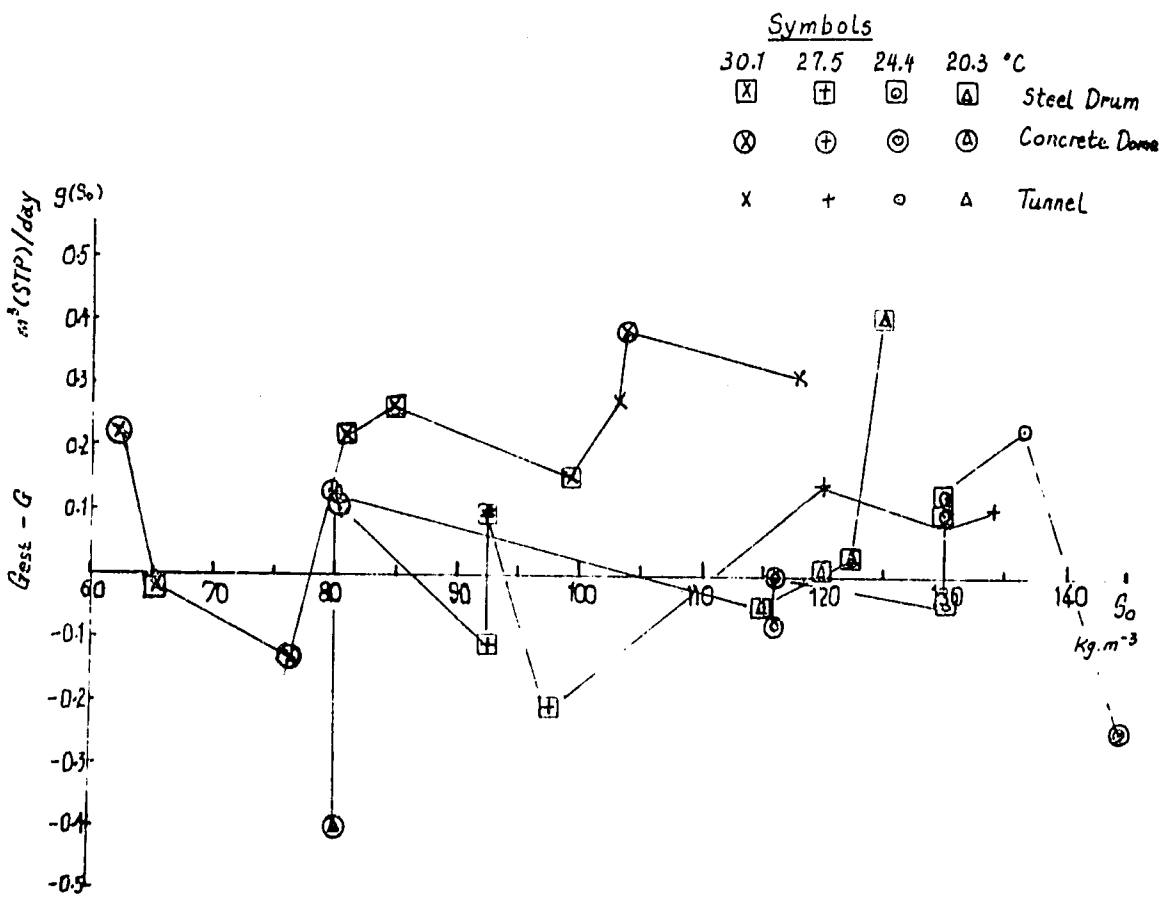

Fig. 3.9 Effect of Influent Substrate Concentration on Gas Production Graph of $g(S_0)$

In investigating the effect of moisture content on gas output for the 3 types of semi-continuously fed plants (Drum, Dome, and Tunnel), kinetic data were collected and analysed as shown in the preceeding sections where by regression, the estimate of daily gas production, G_{est}, was found:

$$G_{est} = C_1 \; C_2 \; f \; V \; S_o \; k / (1 + kR)$$

This estimate, G_{est}, deviates from the actual gas production, G, both given at STP. It is the purpose of our analysis here to determine whether the deviation can be ascribed to the effect of slurry moisture content.

Note that the concentration of substrate in the influent, S_o, is an indicator of slurry moisture content in the digester. In our field experiments, the moisture content in the slurry is 1 to 2% less than that in the influent. Because of incomplete mixing inside the digester, it is convenient and adequate to use S_o as an indicator of moisture content of digester slurry.

The deviation of G as measured, from its estimate G_{est} as calculated from the regression equation, can be due to the effect of slurry moisture content, randomness, or other unknown factors. If moisture content alone causes any appreciable effect, G may be expressed in the form:

$$G = C_1 \; C_2 \; f \; V \; S_o \; k / (1 + kR) \quad x \quad f(S_o)$$

$$= G_{est} \; x \; f(S_o)$$ where $f(S_o)$ is some meaningful function of S_o.

This gives $\underline{f(S_o) = G/G_{est}}$

Another likely possibility for the relationship between G and G_{est} is:

$$G = G_{est} - g(S_o)$$ where $g(S_o)$ is some meaningful function of S_o.

This gives $\underline{g(S_o) = G_{est} - G}$

An intelligent guess of the shapes of $f(S_o)$ and $g(S_o)$ versus S_o is given below. They are exponential functions within a certain range of S_o, and conceivably they vary with temperature.

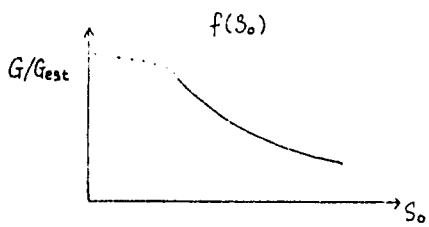

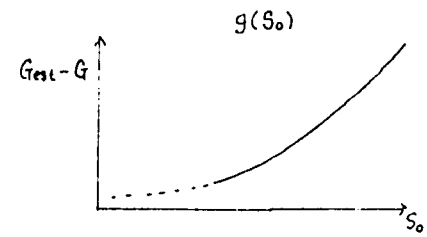

Thus, if slurry moisture content exerts appreciable effect on gas production, we might be able to determine $f(S_o)$ or $g(S_o)$ for different temperatures, by plotting G/G_{est} versus S_o and $G-G_{est}$ versus S_o. The graphs for the four temperatures ranging from 20 to 30°C are depicted in Fig. 3.9 and 3.10. Using curvilinear regression on the data points, the regression equation for each temperature, the corresponding correlation coefficient, r, were calculated, and test of significance were performed.

276

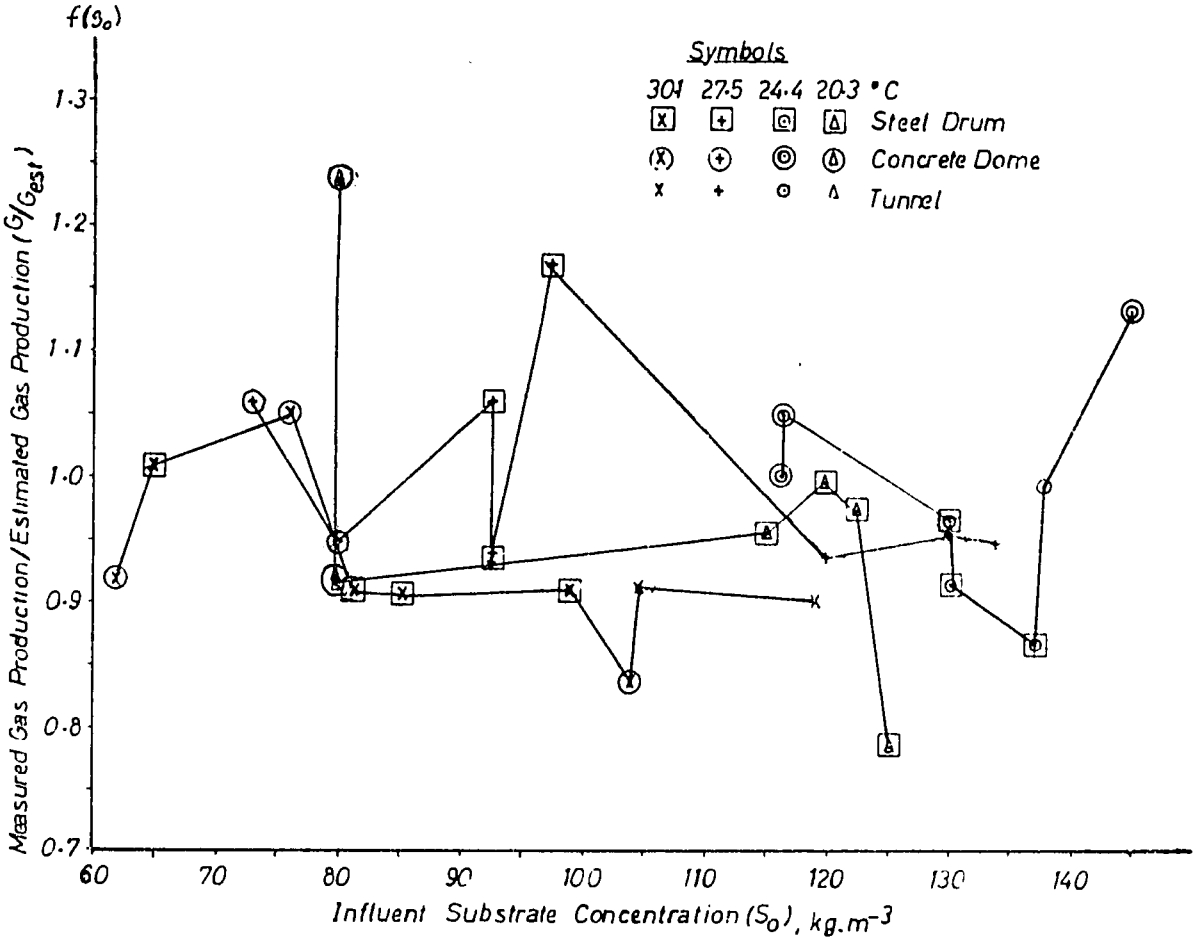

Fig. 3.10 Effect of Influent Substrate Conc. on Gas Production, Graph of $f(S_o)$

At 30.1°, the exponential regression equation for $g(S_o)$ is:

$$g(S_o) = 0.793 \times 1.004^{S_o} - 1$$

$r = 0.58$ non-significant at the 5% level (d.f. = 7)

The regression equation for $f(S_o)$ is:

$$f(S_o) = 1.14 \times 1.002^{-S_o}$$

$r = 0.66$ just non-significant at the 5% level (d.f. = 7)

At 20.3°C, regression analysis gives

$g(S_o) = 0.624 \times 1.005^{S_o} - 1$ with $r = 0.39$, non-significant at 5%.

$f(S_o) = 1.245 \times 1.0025^{-S_o}$ with $r = 0.40$, non-significant at 5%.

For the other temperatures 24.4 and 27.5°C, the correlation coefficients for both $g(S_o)$ and $f(S_o)$ were even lower (as obvious from Fig. 3.9 & 3.10) and not worth reporting.

The highest correlation occurs at 30.1°C. It appears that $G/G_{est} = f(S_o)$ gives a better description of the relationship since r (0.66) is higher than

277

that of the equation $g(S_o) = G_{est} - G$. However, it still does not (barely) make the 5% significance test. Even if it does, 56% ($1-r^2$ in %) of the variation of G/G_{est} cannot be explained by its relation with S_o.

In other words, at the influent moisture content between 6 to 14.5%, and temperature range 20 - 30°C, the deviation of G from G_{est} cannot be explained by the variation of slurry moisture content. In fact, the deviations are small, as evident from the high correlation coefficients for field data (Table 3.2). They can well be due to randomness in environmental and operational parameters, such as daily random fluctuation in substrate and water input, dung dry-matter, and digester temperature.

In the Steel Drum, Concrete Dome, and Tunnel designs of biogas plants, movement of slurry caused by semi-continuous feeding, and in particular, by displacement of slurry in the latter two designs, probably facilitate the evolution of gas bubbles in the slurry. This would make the effect of slurry thickness less pronounced.

3.7 The Effect of Pressure

The effect of pressure is two-fold: it can alter the composition as well as the total output of biofas. Carbon dioxide is soluble in water readily while methane is not. At high pressure, the solubility of cafbon dioxide increases proportionally much more than that of methane, with the consequence that the gas will contain a higher percentage of methane.

It was postulated that given the same conditions, drum type plants, which operate at a lower pressure (between 60 and 90 kg/m^2 or mm Water Guage) would deliver more gas than a displacement type plant, the pressure of which is variable up to 1200 mm WG.

How high does the pressure has to get before it can exert substantial effect?

Tests were performed at different times on displacement type plant. In the first experiment with a tunnel plant, gas was allowed to accumulate for one day before being released for measurement. In this way, pressure could build up to as high as 1100 mm (WG). This was compared with the gas production from the plant when it was measured twice daily, since the pressure remained always below 780 mm (WG).

In the second experiment, a dome type plant was connected to a gas meter, so that any gas produced would run through the meter and pressure would not build up (above 40 mm WG). This result was compared with the gas production when measurements were made twice daily. The results are given in Table 3.3. Interestingly, pressure within the testing range has negligible effect on gas output.

Plant Type	Gas Measurement	Pressure (mm WG)	Temp. (°C)	Gas Prod. (m^3)	No. Reads
Tunnel	Once daily	Variable max: 1100	20.5	1.53	2
	Twice daily	Variable max: 780	20.5	1.63	2
	Once daily	Variable max: 1100	21.1	2.16	2
	Twice daily	Variable max: 780	21.1	2.11	2
Dome	Twice daily	Variable max: 1200	24.5	1.74	7
	Meter	Fixed max: 40	24.5	1.67	6

Table 3.3 Effect of Gas Pressure on Gas Output

According to one study in Egypt (El-Halwage, 1980), as operating pressure was elevated, the percentage of carbon dioxide decreased while that of methane increased, reaching a value of 75% methane at a constant pressure of 370mm (WG). There was also a concomitant decrease in total output of gas, but the total methane output was hardly altered.

On the other hand, our experiment on dome-type plants showed imperceptible differences at the operating pressure range of the plant (Table 3.4).

Pressure, W.G.	Methane, %	standard deviation
Constant, 50-100mm	50.7	2.7
Variable, Max. 850mm	51.3	4.4
Variable, Max. 1900mm	52.0	0.8

Table 3.4. Effect of pressure on methane content of biogas from concrete dome plant.

From these results, it appears that displacement type (concrete dome and tunnel) which operate at variable high pressures do not suffer a lower gas production, nor do they deliver gas richer in methane than low pressure plants. As pressure is released during gas consumption, dissolved gas in the slurry is also released and the resultant average gas composition would turn out to be similar to that of low pressure plants. Results would perceivably be different if the plants have been operated at constant high pressure (as in the Egyptian study) which supresses the release of dissolved gas from the slurry.

3.8 Discussion of Results

Field tests on the three types of semi-continuously fed biogas plants (drum, dome, and tunnel) built in Nepal indicate little difference in their kinetic behaviour. This result is unexpected as they differ in their positions relative to ground level, in the digester configuration and in the mechanism of slurry displacement (used in the some and tunnel types, but not the drum). These factors should exert considerable effects on slurry agitation and mixing. Lacking the displacement mechanism, the drum plant has the least amount of mixing, although some manual mixing is often sone, by rotating the drum. In the tunnel plant, mixing by displacement is limited by its longitudinal shape, so that there are obvious gradients of the percentages of methane, carbon dioxide, hydrogen and gas output along the entire length of the plant (Figure 3.11). Temperature gradients in the slurry and daily inflow of feed also contribute to mixing, but it is far from uniform in any of these designs. Despite the apparent incongruity, however, analysis indicates that all three processes can be described by a simple unifying model - that for a CSTR - provided that the retention time greatly exceeds the feeding interval. The intrinsic differences between the three processes are small enough to be masked by day to day random fluctuations in the operating conditions.

Another assumption in the model, is the attainment of steady state by the process. However, owing to seasonal fluctuations in temperature and dung dry matter content, the systems can at best attain only quasi steady state. To take this into account, refinement of the model is possible (by careful daily monitoring of various parameters and computer simulation). For practical purposes, this would not be worth the expense as we find the simple model serves well in prediction under field conditions.

Let us now examine the effect of each parameter:

PH: when the process is in full swing, the slurry produces its own buffer to maintain the pH between 6.5 and 7.0. Adjustment is not necessary, unless the pH drops below 6.5, indicating imbalance in the process.

Variable High Pressure: variations up to 1200 mm (WG) appear to have little influence on total gas output or methane content.

Solid or dry matter content: variations between 6 to 14.5% in the feed (or 5 to 13% in the slurry) do not retard the evolution of gas from the slurry. However, to facilitate flow and mixing in a semi-continuous process, the influent dry matter content should not be more than 14%.

Temperature and Retention time: are the more crucial factors affecting gas production. Reaction rates can decrease by 60% and gas output by 40% to 50% when the temperature falls from 30°C to 20°C. The decrease in gas yield can be compensated by building a larger plant, but to economise on construction cost, digester temperature should be maintained at at least 25°C throughout the year (see Vol. 1 Ch. 10 and Vol. 2 Ch. 6).

The efficiency of conversion increases indefinately with retention time while the rates of conversion or gas output reach their maximum at a certain retention time (R_{max}), depending on the temperature and the nature of the substrate (Figures 3.5 and 3.6). The higher the temperature, the smaller is R_{max}: being 15 to 20 days at 30°C and 30 to 35 days at 20°C. Operation at a retention time equal to R_{max} is conceivably ideal, but it is also precarious. A drop in temperature will shift R_{max} to the right, causing a sharp drop in gas production rate and possibly a washout. Total washout will not occur when cattle dung is used as a substrate, as methanogens are always present. However, at high dilutions, these slow growing organisms would be unable to proliferate.

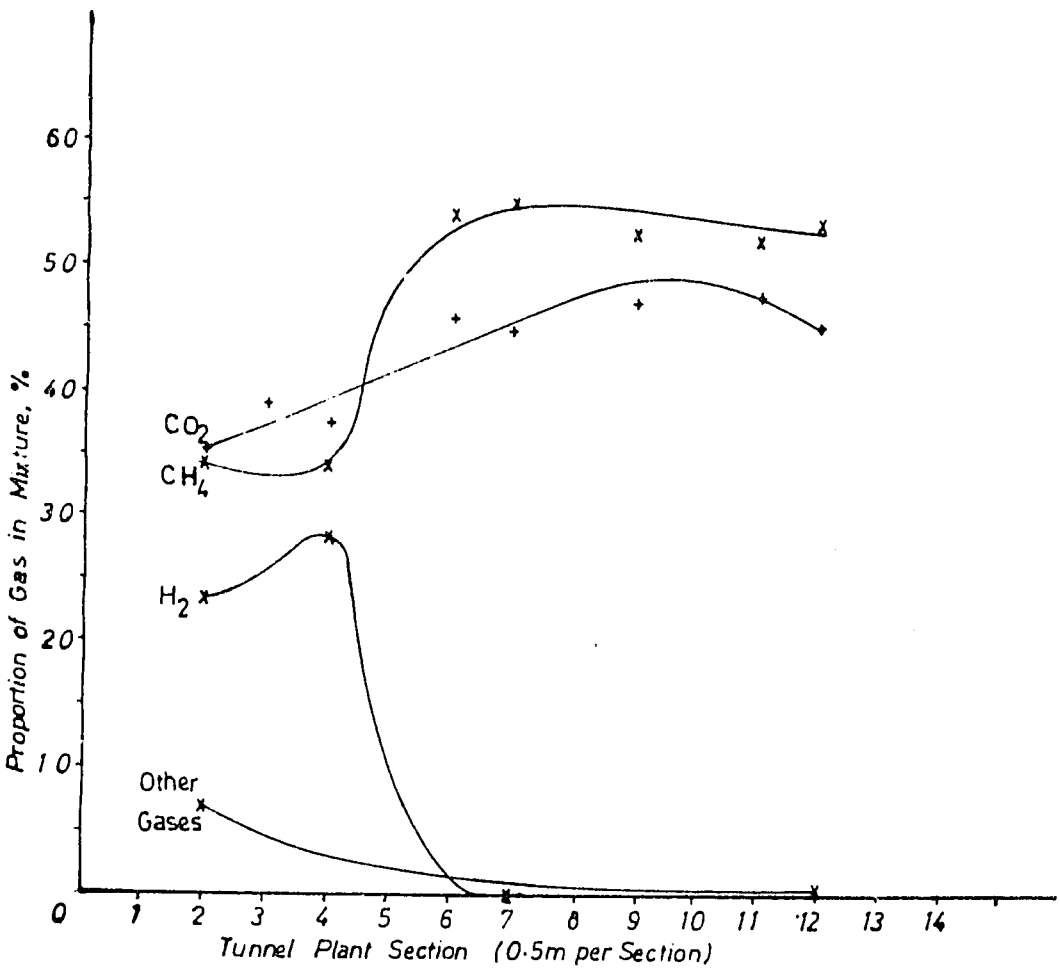

Figure 3.11 Proportions of Different GAses Along the Length of a Tunnel Plant.

281

3.9 Prediction and Optimisation

The model can be used practically to predict and optimise the operation of biogas plants. This can be shown by the use of examples.

1. What is the daily gas output for a drum type biogas plant with 7.1 m^3 digester volume at 25°C, with the recommended daily input of dung and water being 60 kg each? The dry matter of the dung is assumed to be 20%. At present many plants are operated under these conditions.

a) First find the retention time: R

$$R = \frac{\text{Digester Working Volume } V}{\text{Daily Input Volume}}$$

The density of the slurry is about 1 kg/litre.

Input volume = 60 x 2 = 120 litres,

$$R = \frac{7.1 \times 10^3}{120} = 59.2 \text{ days.}$$

b) From the graph 3.6, the rate of gas production r_g can be read from the interpolated curve at 25°C:

At R = 59.2 days:

$r_g = 3.0 \times 10^{-3}\ m^3.kg(VS)^{-1}.day^{-1}$ at 25°C.

c) The daily gas production G is given by:

$$r_g = \frac{G}{S_o\ V\ f} \qquad \ldots(1)$$

$$\text{where } S_o = \frac{\text{Substrate Input (kg) x Dry Matter (\%)}}{\text{Total Input Volume (litres)}} \times 10 \qquad \ldots(2)$$

$$= \frac{60 \times 20}{120} \times 10\ kg.m^{-3} = 100\ kg.m^{-3}$$

f = 0.74 for dung from grass-fed ruminants,

Thus: $G = r_g\ S_o\ V\ f = 3.0 \times 10^{-3} \times 100 \times 7.1 \times 0.74$
$= 1.58\ m^3$ gas (STP)/ day or
$1.72\ m^3$ gas at 25°C.

At 30°C, the same calculations would give: $r_g = 5.6 \times 10^{-3}$ and G = 2.95 m^3 gas (STP) / day.

If the influent dry-matter is increased from 100 to 130 $kg.m^{-3}$, (ie. less water is used, but dung input remains unchanged)

At 25°C, $R = \frac{7.1 \times 10^3}{92.3} = 76.9$ days,

$r_g = 2.55 \times 10^{-3}$ at 25°C and

G = 1.74 m^3 gas (STP)/ day.

Thus, when a thicker slurry is used, the retention time is longer and more gas is produced.

2. A smaller plant can actually be built to yield the same amount of gas 1.58 m^3 daily, at 25°C by using a higher dry matter content in the influent, say: $S_o = 130\ kg.m^{-3}$ (13% dry matter).

Assuming only 60 kg dung is available:

$$\text{Total input} = \frac{60 \times 20 \times 10}{130} \text{ using formula (2),}$$

$$= 92.3 \text{ kg or } 92.3 \times 10^{-3}\ m^3.$$

Now r_g is a function of R, say f(R):

$$r_g = \frac{1.58}{130 \times V \times 0.74} = f(R) \text{ using formula (1).}$$

Since $V = 92.3 \times 10^{-3} \times R$ $\quad r_g = f(R) = \frac{0.178}{R}$.

282

R can be solved graphically from this equation by plotting the curve $y = \frac{0.178}{R}$ on the same graph and finding the intersection with the 25°C r_g curve.
The curves intersect at R = 58 days and V = 5.4 m^3.

Alternatively, the graph $r_g = f(R)$ can be estimated by regression analysis and R can be solved numerically.

By increasing the dry matter content of the influent, the retention time is reduced from 59 to 58 days, the digester volume is reduced from 7.1 m^3 to 5.4 m^3 and water for mixing is saved. S_o is increased from 100 to 130 $kg.m^{-3}$ or the dry matter from 10% to 13%, while the dung input and the gas output remain the same. Therefore, by increasing the dry matter content in the slurry, the construction cost as well as water can be economised.

3. Now 1.53m^3 (STP) of gas is not usually enough for the daily consumption by a family of 6 persons. Based on the daily requirement of gas one can adjust the following factors to optimise the cost:

a) Digester Volume - affects the capital cost;

b) Input dung - affects the operation cost;

c) Input water - affects the operation cost.

The scarcity of water for mixing does pose a problem when the water source is distant or limited during the dry season. The minimum amount of water to give a dry matter content of 13% is used in the following calculations.

Economic analysis (Vol.1 Ch.11) showed that the cost of gas plant is a bottleneck for biogas extension. The recurring cost of dung is relatively insignificant in affecting the economics of the biogas plant. However, in practice, gobar is a limiting factor in most village situations.

Now, given a daily gas requirement G, to meet this requirement,

$$\text{Daily gas production } G = r_g \times S_o \times f \times V = f(R) \times S_o \times f \times V$$

$$= f\left(\frac{V \times 10^3 \times S_o}{W_g \times DM}\right) \times S_o \times f \times V$$

where W_g is the dung input in kilogrammes and DM its dry matter content in % (20% in this calculation).
Dung input W_g and digester volume V are the two independent variables that can be manipulated.
Consider the two situations:

a) If the availability of dung is unlimited, one would build the smallest size of biogas plant that could deliver the required daily volume of gas (say 2.8 m^3 at STP) at the lowest temperature of operation.

If the plant can be maintained at or above 25°C throughout the year, the maximum rate of gas production is:

4.5×10^{-3} $m^3.kg(VS)^{-1}.day^{-1}$ at R = days.

Applying formula (1): $V = \frac{G}{S_o \; f \; r_g}$

$$= \frac{2.8}{130 \times 0.74 \times 4.5 \times 10^{-3}}$$

$$= 6.5 \text{ m}^3 \text{ (minimum digester volume)}$$

The amount of input would be:

$$F = \frac{V}{R} = 260 \text{ litres/day}$$

$$\text{and } W_g = \frac{F\,S_o}{DMx\,10} = \frac{260 \times 130}{200} = 169 \text{ litres/day (169 kg/day).}$$

If the plant can be maintained at 30°C throughout the year:

$r_g = 6.75 \times 10^{-3}$ at R = 20 days when r_g is maximum

$V = 4.3 \text{m}^3$, total input = 215 litres/day, dung = 140 kg/day,

If a retention time of 50 days is used $r_g = 6 \times 10^{-3}$: (30°C)

$V = 4.85 \text{m}^3$, total input = 97 litres/day, dung = 63 kg.

Since the difference in the volume of the plant is not great, the lower dung input would be prefered.

b) If dung is limited, to say 60 kg/day, what is the minimum digester volume required?

To meet a daily biogas requirement of 2.83 m^3/day, at $S_o = 130 \text{ kg.m}^{-3}$, the calculation proceeds as in 2:

$$r_g = \frac{2.8}{130 \times 0.74 \times V} = \frac{2.8}{130 \times 0.74 \times R \times 92.3 \times 10^{-3}}$$

$$= \frac{0.315}{R} = F(R).$$

Solving for R graphically gives:

at 25°C R = 135 days and V = $135 \times 92.3 \times 10^{-3} = 12.5 \text{ m}^3$;
at 30°C R = 55 days and V = $55 \times 92.3 \times 10^{-3} = 5.1 \text{ m}^3$.

Therefore if the plant can be maintained at 30°C all the year round, a digester volume of 5.1 m^3 is sufficient.

However, if only 25°C can be maintained, the digester volume has to be increased to 12.5m^3. The lower the operating temperature, the larger the digester volume has to be in order to deliver the required volume of gas at limited availability of substrate.

	Temp. (T) °C	Digester Vol. (V), m^3	Mass Dung (W_g), kg	Ret. Time (R), days	Gas Output (G) m^3
a.	25	6.5	169	25	2.8
	30	4.3	140	20	2.8
b.	25	12.5	60	135	2.8
	30	5.1	60	55	2.8

Table 3.4 Results of Calculations based on Model.
a. Substrate unlimiting - digester volume smallest and r_g maximum.
b. Substrate limiting (60kg gobar/day)

Appendix to Fig. 3.7:

For each temperature, the type of plants and the number of readings are given in ascending order of data points along the x-axis.

Temperature										
30.1°C	Plant type	C	S	S	C	T	S	T	S	C
	No. readings	19	6	6	24	19	23	25	13	12
27.5	Plant type	C	T	C	S	S	S	S	T	T
	No. readings	13	10	13	10	4	3	12	13	15
24.4	Plant type	S	T	C	C	C	S	S		
	No. readings	2	18	6	7	28	2	2		
20.3	Plant type	S	S	S	C	S	C	C		
	No. readings	2	2	3	37	17	24	11		

The codes are: S — Steel Drum
C — Concrete Dome
T — Tunnel

The initial biogas extension programme in Nepal was based on the standard KVIC steel drum design of biogas plant (ESCAP). Several design weaknesses were quickly discovered in the course of the construction of the first 95 plants by DCS in 1974/5 for farmers in the Terai region of the Lumbini zone of Nepal. The water table in many places was high, so that the deep holes for the standard straight plant were difficult to dig, as they kept filling with water. The flexible plastic gas outlet pipe at the top of the drum became brittle after a few months in the strong sunlight and had to be replaced regularly. The steel gas drums started to corrode.

These design weaknesses were of the type that could only be discovered by building a number of plants for customers and then making follow-up visits to these customers afterwards. The replacement of the plastic hose was only a real problem to farmers who lived in remoter areas and had to spend time going to a town where a new piece could be purchased. Such farmers also did not have the screwdrivers and spanners needed to loosen the hose clips to change the hose. The depth of the straight design only became a problem where the water table was high. These two weaknesses were reduced by modifying the design (see Volume I, Chapter 2). The steel drum was also designed to use less steel and to be lighter in weight.

These experiences set the pattern for the work of research and development in DCS. Emphasis was laid on the field testing of new ideas in a local setting, with local people. While there are many designs of biogas plants available (ESCAP, Maramba, Pyle), very few designs will work well in the severe economic and environmental conditions in Nepal.

Follow-up

The first 95 biogas plants built by DCS were visited 3 times by DCS research staff (Finlay). Once the Gobar Gas Company was set up, their field staff also made yearly follow-up visits to these plants. The first visit was made soon after the last of these plants was completed. It was discovered that 7 of the 95 plants had cracks in the brickwork, mainly due to poor backfilling behind the brick walls. These plants were repaired and the masons taught to do backfilling more effectively. 9 of the 95 main gas valves, which were gate valves, were broken because the farmers tended to turn them the wrong way. These broken valves were replaced and plug cocks were ordered for use in the future. During these visits, any errors made by the owners in operating the plants, such as feeding with too little dung, were also noted and the correct proceedures explained to the farmers.

One major problem revealed by all three follow-up visits, was that of the corrosion of the steel gas drums. Poor quality steel had been used in the manufacture of these drums and chlorinated rubber paint had been used to protect them. 86 of these tanks were showing signs of corrosion less than a year after they were installed. After the first follow-up visit, all of the drums were cleaned and repainted with bituminous paint (high build black). This reduced the rate of corrosion, but did not eliminate it.

Adaptive Research on Gas Storage Systems

Several attempts were made to develop a floating gas drum made from a material other than steel. A drum made from high density polyethylene sheet (3 mm), hot air welded together, was made for DCS by a company skilled in the process. The drum was damaged in transit, and cracked again, while in use after being repaired. HDPE tends to flex when it

is heated by sunlight: it softens and expands. Since the top side of the drum was made by welding two sheets in different planes together, the sheets cracked as they attempted to flex in different directions. This drum was more expensive than steel. Enquiries about the cost of drums made from glass fibre bonded with polyester or epoxy resins suggested that this type of drum would also be more expensive than a steel one for a customer in Nepal.

Another approach was to use a floating drum made from ferrocement (Raman, Fulford): a sand/cement mortar (25 mm thick) reinforced with wire mesh. The first design that was made: a hemispherical shape (Figure 4.1) proved to be the strongest and most successful. Other, squarer shapes tended to crack more easily, especially near the corners, where stresses are concentrated. One very interesting design, which unfortunately did not work, used a trapezoidal gas container, which was hinged at one end (Figure 4.2). It proved difficult to seal the corners of the gas holder against leaks.

All ferrocement gas holders were very heavy and difficult to transport and to put in place. The first few were made in DCS and taken to site. Shear legs and a chain hoist were required to lift them over the digester pits. Lifting and transporting these drums put severe strains on the ferrocement walls and several cracked before they could be used.

Another problem was the sealing of the inside of the cement structures to make them gas tight. Cement plaster is slightly porous to biogas, even when it is well made. The use of chlorinated rubber paint proved ineffective, as it tended to flake off the surface when immersed in the slurry. Epoxy paint did work, but it was difficult to dry out the cement plaster to the point that the paint would adhere to it. Also the use of such paints, with strong smelling and toxic solvents, was very difficult in an enclosed space, such as inside a gas drum. Labourers were quickly affected by the fumes and could work only for short periods.

The alternative designs of gas holders were made for farmers in the

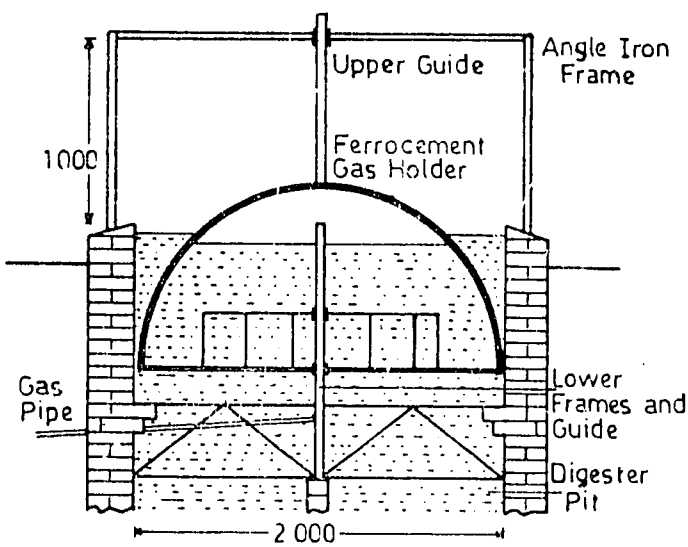

Figure 4.1 A Design of Hemispherical Ferrocement Gas Holder.

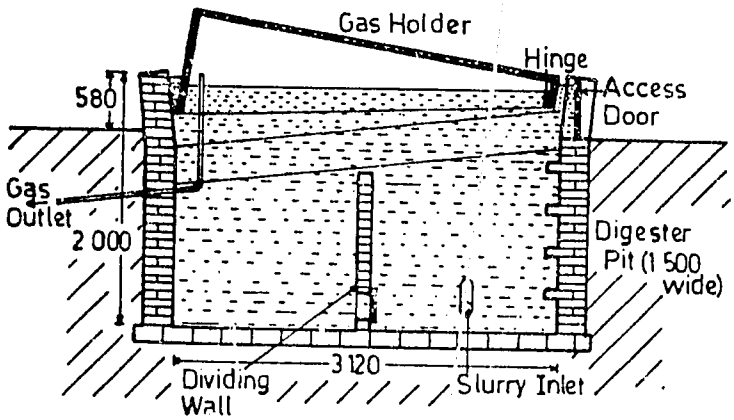

Figure 4.2 Hinged Trapizoidal Ferrocement Gas Holder.

field. The customer was told of the experimental nature of the design and usually paid a reduced price for the plant. They were not at all happy if the experimental design failed, as most of them did. Usually the ferrocement drum was replaced with one made from steel, at DCS expense. In one place, a whole new conventional biogas plant had to be built. In another place, the customer wanted his money back. One of the hemispherical drums lasted 3 years, with yearly painting, before it was replaced with a steel one.

Such an approach was not helpful to the reputation of biogas technology in Nepal. Although new designs must be field tested, they should be first tested at a prototype level, before being offered to customers. A test site was therefore set up, where futher prototype designs of biogas plant could be built and thoroughly tested before field tests were started.

Displacement Type Biogas Plants

Alongside the attempts to make a floating gas holder from ferrocement, consideration was also given to the idea of a fixed gas storage volume and the use of the displacement principle (see Volume I, Chapter 3). One plant was built to the early Chinese design (McGarry), which had a flat cover for the top. The cover also acted as the floor of the slurry reservoir (Figure 4.3). This design gave many problems: the slurry in the large reservoir tended to dry out in the sun, or became diluted when it rained. The use of a plastic tent over the reservoir to protect the slurry proved unsuccessful. Local children and animals very quickly destroyed the tent. The flat roof of the gas storage volume was difficult to make gas tight. Internal gas pressure lifted the roof slightly, so it flexed at the corners and cracked the cement plaster seal.

The design of biogas plant that eventually proved successful when tested by DCS, was based on the dome shaped displacement digesters, also developed in China (SPIIBD, van Buren). The first was built of brick masonry, including a brick dome, but it proved expensive (Fulford). The use of a concrete dome cast in-place over a mud mould was adopted as the standard DCS design (see Volume I, Chapter 3 for full technical details).

The sealing of the concrete continued to be a problem. Bitumen spread over the surface of the dome tended to form pin holes, if the concrete

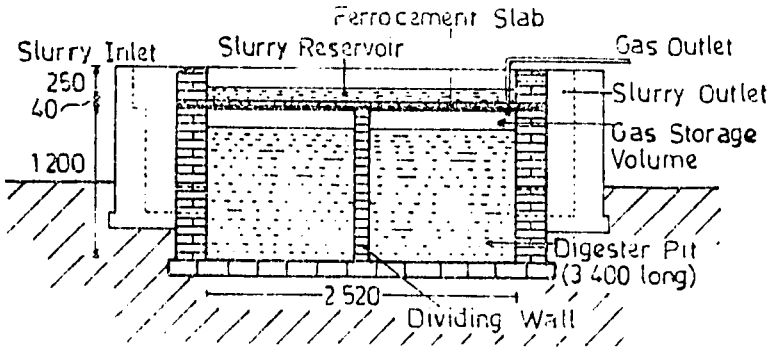

Figure 4.3 Flat Roofed Displacement Digester.

was even slightly damp. Eventually the idea of a plastic emulsion paint was tested (Chen). Advice from paint manufacturers (Indofil) suggested that acrylic paint was more stable than vinyl emulsion in a damp atmosphere. A locally available acrylic emulsion paint has now been used very successfully in over 550 dome type biogas plants. As an emulsion in water, it does not give off strong smelling and toxic fumes. It can be mixed into the cement plaster to give an impervious seal and the concrete does not have to be dry before this plaster is applied.

Field Testing of Dome Plants.

Once the prototype dome plant worked on a test site, DCS was able to make careful plans for the field testing of this design, based on our previous experience. 12 plants were used as test sample, built for customers in the Pokhara area. The customers were expected to pay a market price for the new design, so as not to set a precedent for low cost, subsidised plants in the area. However, DCS set aside a 100% guarantee fund for each of these plants, so that failures could be put right quickly, if they occured. Several members of staff from the Gobar Gas Company helped in the building of these plants, so they could be trained.

Two follow-up visits were made to these plants by research staff, as well as the normal regular visits by the Gobar Gas Company extension staff (Shrestha, Devkota). The second visit also included 11 plants built by the Gobar Gas Company on a normal commercial basis (with a 7% guarantee charge, paid by the customer). All the plants were working well and there were no signs of leaking or cracking in the domes. The major problems were leaking from the main gas valves, which were not designed for the higher gas pressures from a displacement digester, and occasional blockage of the gas outlet by slurry. In some plants, the slurry seemed to be leaking through the digester, outlet and reservoir walls, as it was not overflowing from the plant in the same volumes it was put in. While the plaster lining of the dome was gas tight, due to the plastic emulsion, the plaster lining of the other parts of the plant was not water tight.

The problem of slurry blocking the gas outlet is related to the first problem of gas leaks. If the dome is filled with gas each day, slurry is displaced into the reservoir and overflows out of the plant. If gas leaks mean that the dome is not full of gas, the plant can be overfilled with slurry, allowing it to come out of the gas pipe. The gas outlet pipe was made larger and a removable cap fitted to the top, so the pipe

could be cleared easily in later models. The level of the slurry reservoir floor relative to the top of the dome was also altered in later design drawings, so that the chance of the slurry level in the dome being too high was reduced. Work was also started on the design of biogas valves that would not leak at the pressures produced by displacement digesters (see Volume I, Chapter 6):

The regular follow-up visits by Gobar Gas Company staff also pointed out some other problems. Some of the dome plants built in one area did not appear to store enough gas. One plant was emptied and the inside of the dome measured and it proved to be the wrong shape. The metal template, used to shape the mud mould, had been wrongly placed, so the dome was too wide and flat. The template was redesigned with vertical and horizontal struts that could be checked against a plumb-line or datum string.

The problem of slurry leaking through the plastered walls was repeated in a few other places, mainly where the soil was sandy and porous. This has not fully been solved, although the use of a cement, lime (Calcium Hydroxide) and sand mortar (1:1:3) should be effective. Water Glass (Sodium Silicate) could also be used in the plaster mix (McGarry).

Tunnel Plant Experiments

The tunnel plant design was inspired by work done at Cornell university (New York) on plug flow digesters (Jewell). These digesters were supposed to be more efficient than mixed reactors and could use a thicker slurry (up to 15% solids). One plant was built on a test site, with a steel arched roof, divided into sections with baffles. The gas produced in each section could be measured seperately. If it was found that most of the gas was produced in the middle part of the tunnel, the total length of the tunnel could have been reduced.

The tunnel plant is not a plug flow reactor, as there is horizontal mixing as the slurry is displaced by the gas stored or being used from the gas storage volume (see Volume I, Chapter 4). The results of a year's tests on this experimental tunnel plant and a dome plant on the test site, indicate that both designs behave in the same way, when fed similar amounts of feed (see Chapter 3). Biogas was produced along most of the length of the tunnel, except near the inlet, where the populations of bacteria were adjusting to the feed. A reasonable amount of biogas was still being produced from the slurry coming into the reservoir, indicating that the tunnel should be made longer, not shorter.

A second tunnel plant was built on the test site, to test the construction techniques. Various methods for fixing the plastics sheet lining to the gas storage volume were tested in this plant. The length of this test plant was too short for it to be used for gas production tests. Also slurry leaked through the plastered walls, so it could not be retained in the plant.

A test sample of 6 plants, built to a design based on these test site results (see Volume I, Chapter 4), were constructed for customers in the Butwal area. DCS set aside a 100% guarantee fund for each plant. The roof sections were all made on the test site and transported to the sites by rickshaw. One design weakness was discovered: part of the arched roof, which acted as a floor for the slurry reservoir, lifted up under internal gas pressure. The use of a mass of weak concrete, keyed into the side walls above these sections, supplied the necessary counterweight.

All 6 tunnel plants appear to have worked well, with no leaks from the

plastics lining. Staff of the Gobar Gas Company, however, question the commercial viability of the tunnel plant. If the roof sections are made in a central place, they would be difficult to transport to a remote site. If they are made on site, a mason and a helper would have to spend several days casting them, before the construction of the plant could be started. Company masons are also anxious that the plastic lining could be easily punctured while they are putting it in place. At present, the possible advantages of the tunnel design are insufficient to warrant a change from the present emphasis on the dome design, except in special circumstances.

Future Directions

The work of development of the tunnel plant has suggested another design of biogas plant that could help to fill a gap in the present range. The extended dome design (see Volume I, Chapter 14), which has domed ends with a tunnel section in between, could be made in larger sizes, up to EP95 (95 cu.m internal volume), producing about 20 cu.m of gas a day from 600 kg of cattle dung (from 40 to 50 animals). A smaller version of this extended dome design, also with the roof section cast-in-place, could be used in positions where the soil was too weak to support a dome plant, or where deep pits could not be dug because the water table was too high.

The staff of the Gobar Gas Company have been invloved in the approach to research and development pioneered by DCS in Nepal and they will continue to follow this approach in their own work.

Lessons Learned

Ideally, the development of a new design of appropriate technology, such as a biogas plant, should follow a natural progress. Once the requirements and specifications are defined, a prototype design can be made and tested in a laboratory or on a test site. Modifications are made to the prototype until it works well and can be produced fairly easily. A limited number of units are then made and sold to customers for field testing. The customers should pay a market price for their unit, but finance must be available to provide proper guarantees and protection to them. Close and careful follow-up is required, with a quick response to repair or to make modifications if failures occur, due to design faults or poor construction. This is essential in order to keep people's confidence in the technology and the extension organisation.

Once an effective design is complete, extension staff must be trained to make the units, so they can be sold on a commercial basis. Close cooperation between R & D staff and extension staff assists and speeds up this operation. An over-emphasis on either side, on R & D or on extension, can lead to weaknesses in the progress.

5a.1 TOTAL GAS OUTPUT

The amount of gas produced daily by a biogas plant can be deduced if both the volume of the gas in the gas holder and the gas consumption of the appliances are known. The latter can be conveniently measured by commercial wet-type gas meters. These meters operate at low gas pressures (less than 200mm W.C.) and therefore are suitable for steel drum type plants. For the Cement Dome and the Tunnel Plants, which operate at higher pressures, a pressure regulator can be connected in series with the meter to prevent gas leakage and inaccurate readings resulting from high pressure. DCS has made its own design of wet gas meters that operate at higher pressures (see Vol.2, Ch.5)

Calculation of the Volume of Gas in the Gas Holder

1) Floating Steel Drum (see Fig. 5a.1)

Measurements required:

l_1 = height of the steel drum above slurry in the digester, metres.

l_2 = gas pressure as indicated by water manometer, metre WC

Plant dimensions required:

r = internal diameter of steel drum, metre

Since the drum has weight, the gas pressure inside is above atmospheric pressure, and consequently the slurry level inside the drum is slightly lower than that outside. The difference, l_2, can be measured with a water manometer connected to the gas pipe outlet. It is assumed that the specific gravity of the slurry is roughly equal to that of water, since the difference is less than 10% (Table A.1).

Volume of gas $V = \pi r^2(l_1 + l_2)$

The unit of V is in cubic metre, m^3

2) Cement Dome (see Fig. 5a.2)

It is less straight forward to calculate the gas volume of masonry plants built underground than for steel drum plants.

Measurements required:

l_2 = gas pressure measured by water manometer, metre

l_4 = depth of slurry in effluent reservoir, metre

Plant dimensions required:

l_3 = depth of the apex of the dome from the soil surface, metre

l_5 = vertical distance between the soil surface and the edge of the effluent reservoir, metre.

R = radius of the dome, metre.

From these measurements, the vertical distance between the apex of the dome and slurry surface in the digester, l_1, can be found.

242

Fig. 5a1: Floating Steel Drum

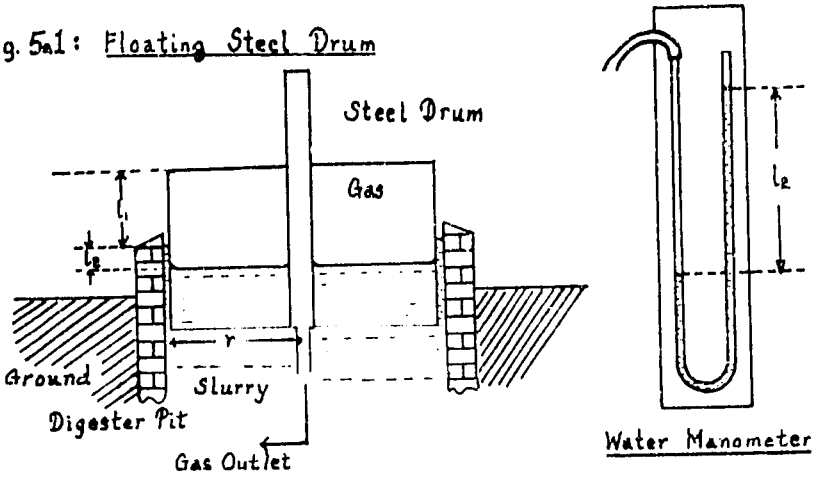

Fig 5a2: Cement Dome

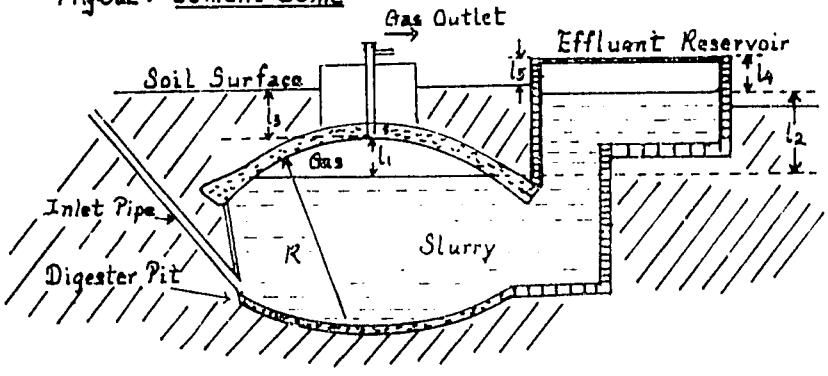

Fig 5a3: Tunnel Plant

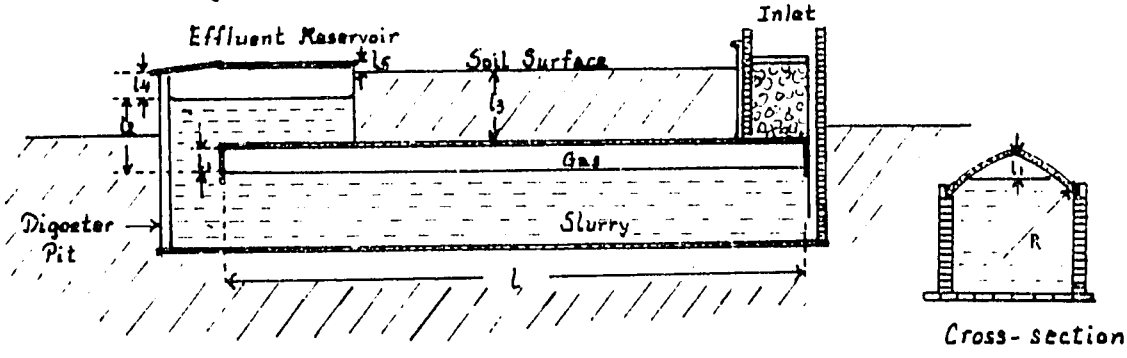

$l_1 = l_2 + l_4 - l_5 - l_3$

Volume of gas $V = \pi l_1^2 (R - l_1/3)$

Unit of V in cubic meter

3) Tunnel Plant

All measurements are similar to that of the Cement Dome plant. Cross-sectional area, A, of the dome occupied by gas is

$$A = R^2 \cos^{-1}(1 - l_1/R) - (R - l_1)(2Rl_1 - l_1^2)^{1/2}$$

Since the plant has the same cross-section along its longitudinal axis (length l),

Volume of gas $V = l \times A$ (unit in cubic metre)

Conversion to Standard Temperature and Pressure (STP)

For comparison of gas production at different temperature and pressure, it is necessary to use the same standard of reference, such as the Standard Temperature (25°C) and Pressure (1 atmosphere) or in brief STP. One atmosphere is equal to 10.367 metre WC at 25°C. Assuming ideal gas law holds,

$$P_t V_t / T_t = P_1 V_1 / T_1$$

Where the subscript t denotes the STP state and the subscript 1 denotes the state of the gas in the gas holder. P_1, V_1, T_1 can be measured. P_t = 10.363 mWC, T_t = 298°K. Therefore, the STP volume, V_t, can be easily calculated:

$$V_t = T_t/P_t \, (P_1 V_1/T_1)$$

Total Output

It is best to measure the gas volume at certain fixed time every day when the gas is not being used. The STP volume, V_t, of the gas in the holder is measured and calculated as shown above. V_t is used to subtract the STP volume of the previous day (say V_{t-1}). The amount of gas used by appliances (say V_R) is obtained from the meter reading and converted to its STP value as well. Therefore,

$$\text{Daily gas output} = V_t - V_{t-1} + V_R$$

Note that $V_t - V_{t-1}$ can be negative. To get a reliable estimate, daily measurements should be taken over a period of time, for at least a week, during which variables like feed input, temperature, and retention time are the same.

If a gas meter is not available to measure the gas consumption of appliances, a rough estimate of the gas production can be obtained by measuring the gas volume at the beginning and the end of an interval during which gas is not used. For example, if the gas volume measured at 8pm is 0.8m³ and at 6am the next day is 1.9m³. The gas produced in the 10 hour span is 1.1m³. Therefore, in 24 hours, the gas production is roughly 2.6m³.

5a.2 GAS COMPOSITION

Biogas comprises a variety of gases. Methane is the main combustible component, varying from 50% to a high of 80%. The rest is mainly carbon dioxide, with traces of hydrogen sulphide which is corrosive.

The most accurate method for determining the gas composition is by gas chromatography. A gas sample is passed through a column packed with material with different affinities for the different gas components. The components are thus seperated and emerge successively with the carrier gas. A detector is located at the outlet of the column to measure the physical property of the gases. The time and sequence in which they emerge help to identify them, and the peak areas indicate their concentration. Two commonly used detectors are thermal conductivity and flame ionization detectors.

The ORSAT Apparatus

The ORSAT Apparatus is used for determining the percentage of CO_2, O_2, CO, and H_2 in flue gas and furnace gas. It is less expensive than gas chromatographs, more simple to maintain, and reasonably accurate for measuring the composition of biogas.

The Apparatus consists of:

1) A 100ml measuring burette with water jacket, connected to a levelling bottle filled with an acidic solution (2M H_2SO_4, sulphuric acid) saturated with salt. This solution prevents the absorption of water soluble and acidic gases.
2) Absorption pipettes with 2-way stop cock (see fig.5a4):
   For the absorption of carbon dioxide, the solution required is 6M sodium hydroxide (240g NaOH/1000ml distilled water). Potassium hydroxide can be used instead but it is more expensive.
   Oxygen is absorbed by an alkaline pyrogallol solution (10g pyrogallol/20ml distilled water and 19g NaOH/70ml distilled water) prepared fresh every time.
3) Absorption pipette with spirals of copper wire:
   Carbon monoxide, CO, is absorbed in an ammoniacal cuprous chloride solution. Since the presence of CO is negligible, it is not measured.
4) Slow combustion tube, for the determining of hydrogen and methane. The tube is fitted with a platinum spiral heated with a maximum of 4.5V at the two terminals. A rheostat is used to adjust the voltage and thus the temperature of the wire. The gas volume inside the combustion tube is controlled with a levelling reservoir of mercury. Before the analysis, the tube is filled with mercury to a fixed level.

Procedure:

1) Leave the external control tap open and the taps of all the pipettes and combustion tube closed.
2) A gas sample of 100ml is passed into the burette by lowering the levelling bottle A that contains the acidic salt solution. Note that before any reading is taken at the burette, the meniscus inside should be adjusted to the same level as that in the levelling bottle.

FIG.5a4 : THE ORSAT APPARATUS

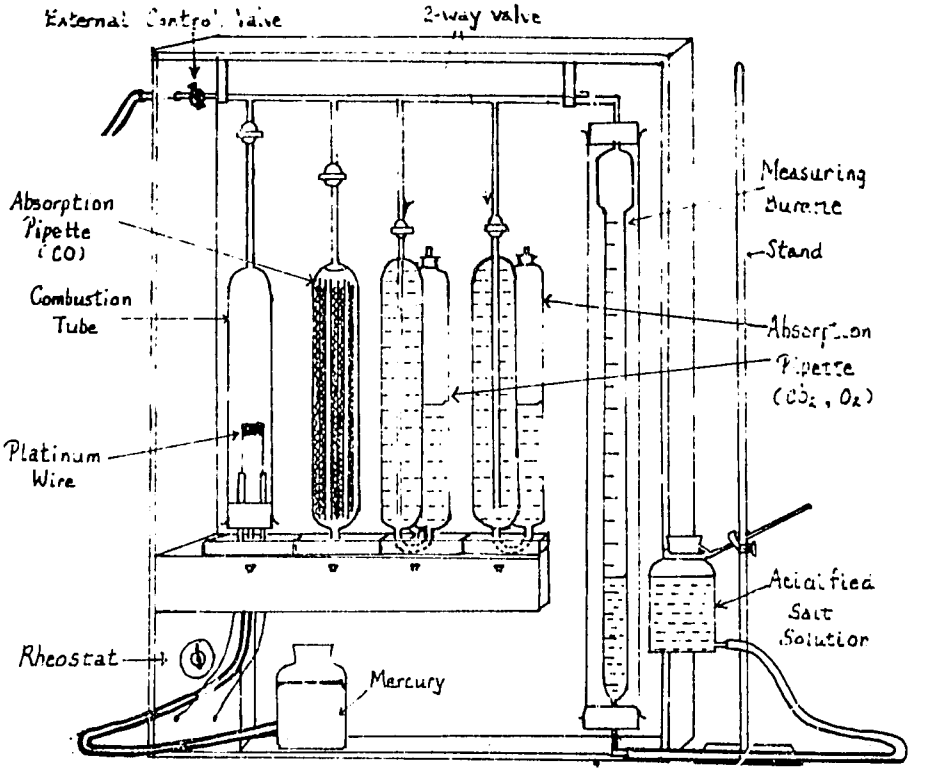

296

3) The external control tap is closed and the 2-way tap of the CO_2 absorption pipette is opened to a 'Y' position. The levelling bottle A is raised until all the gas in the burette is bubbled through the sodium hydroxide solution in the pipette. The scrubbed gas is then passed back into the burette and the reading is noted. This step is repeated 3 or 4 times until 2 consecutive readings are identical. Call this reading C_1.
4) The scrubbed gas is returned to the absorption pipette. The burette is flushed with air several times by raising and lowering the levelling bottle A.
5) 97ml of air is passed into the burette, followed by 3ml of residual gas. The mixture is then passed into the combustion tube by raising the levelling bottle A and lowering the mercury bottle. Note that the explosive limit of air-methane mixture is 5-15% methane. It is important that not more than 3ml of gas (to be on the safe side) is allowed to mix with air or else explosion may occur.
6) Switch on the battery and adjust the rheostat until the platinum wire glows red. Maintain this for 2 minutes. As reaction occurs, water vapor forms and condenses on the glass of the combustion tube.
7) The reduction in volume V after combustion is measured at the burette, and the carbon dioxide formed (C_2) is determined as described in step (2).

Calculations:

During combustion, methane and hydrogen react with oxygen in the following reactions:

$$\underset{x}{CH_4} + \underset{2x}{2O_2} \rightarrow \underset{x}{CO_2} + 2H_2O\downarrow$$

$$\underset{y}{2H_2} + \underset{\frac{1}{2}y}{O_2} \rightarrow 2H_2O\downarrow$$

x and y are the number of moles or volumes of the gases as indicated.

Reduction in volume after combustion = $V = 2x + 1\frac{1}{2}y$ .....(1)

Since x = volume of CO_2 in the gas after combustion=C_2ml

The volume of hydrogen, y ml, can be found from (1) above, therefore, $y = (V - 2x)2/3$ ml

In the original gas, the composition is:

Carbon dioxide = C_1%

Methane (x ml in 3 ml residual gas before combustion)

$$= \frac{C_2}{3}(100 - C_1)\ \%$$

Hydrogen (y ml in 3 ml residual gas before combustion)

$$= (V - 2x)(100 - C_1)2/9\ \%$$

The sum of these three gases may not add up to 100%. The difference, which is usually small, is nitrogen or other inert gases.

Electronic Gas Analyser

This is a portable device for estimating the methane content in natural gas and for checking gas leaks. The principle behind makes use of the different thermal conductivities of methane in the sample cell and air in the comparison cell. Since the gas analyser has been calibrated for methane-air mixtures, it is not suitable for determining the composition of biogas which comprise carbon dioxide and hydrogen. The thermal conductivity of the former is lower than that of methane while that of the latter much higher. With only methane and carbon dioxide in the sample gas, one can recalibrate the analyser with mixtures of varying composition of methane and carbon dioxide. However, hydrogen is likely to be present, and since it has a high thermal conductivity, a low percentage can affect the reading significantly. Recalibration is impossible since there is more than one unknown (hydrogen and carbon dioxide) involved.

Measurement of hydrogen sulphide

Hydrogen sulphide is accurately determined by gas chromatography. An inexpensive method for estimating its concentration is the use of lead acetate paper. It cannot be determined by ORSAT because of its minute amount, and if a lead acetate solution is made, it reacts with carbon dioxide as well forming a white precipitate of lead carbonate.

Lead acetate reacts with hydrogen sulphide to form lead sulphide, a dark brown precipitate. Strips of filter paper are soaked in lead acetate solution (11.1% wt./vol) and dried. The strip of paper is then suspended in a bottle and a fixed volume of gas (1 litre) is passed through it. The paper darkens and its intensity is a rough indication of the percentage of hydrogen sulphide in the gas.(House, 1978).

5a.3 QUANTITY AND COMPOSITION OF INPUT

The feed or input invariably contains a certain amount of moisture. Its wet weight, W_w, can be easily measured by a spring balance or scale.

The dry matter, W_d, or solids content is obtained by drying samples overnight in a forced convection oven (oven fitted with a fan for drawing moisture out) at 100°C. A higher temperature will cause evaporation of volatile solids such as fatty acids, and the measured weight will be less than the actual one. For good sampling techniques, see Van Soest (1978).

Glass crucibles or beakers can be used for holding the sample. Since they reabsorb moisture once outside the oven, they should be cooled down in a dessicator before weighing. Another reason for cooling inside a dessicator is because weighing hot objects with a cold balance will add to the inaccuracy. If an electronic balance is available, weighing can be done more expediently and the hot weighing method is preferred, thus obviating the need for cooling in a dessicator. (Van Soest, 1978).

A dessicator can be made with an air-tight tin with a thick layer of silica gel at the bottom. An indicator of cobalt sulphate can be mixed with the silica gel. The blue cobalt sulphate crystals turn pink when hydrated with water. When the pink colour appears, the silica gel should be regenerated by heating at 150°C for several hours until the blue colour returns.

When the samples are cooled to room temperature, they should be weighed quickly in the balance. Triplicate or at least duplicate samples should be made to give reliable results.

Volatile solids

Volatile solids or organic matter can be measured by ashing the oven dried sample in a furnace at 550°C for 3 hours. The ash that remained is weighed in the manner described above. It is inorganic matter such as silica or chemical salts.

Calculation:

Moisture content $=(1 - W_d/W_w)\ 100\%$

Solids content or dry matter $=(W_d/W_w)\ 100\% = f_d$

Volatile solids or organic matter $=(1 - W_a/W_d)\ 100\%$
(as percent of dry matter)

Where:

W_w = wet weight of sample

W_d = dry weight

W_a = weight of ash

Water to gobar ratio

Having determined the dry matter content f_d of the feed, the amount of water required (W_w) to make a slurry of a desired moisture content can be calculated.

Moisture content in slurry = $M_s = f_d W_w/(W_w + M_w)$

The amount of water required is therefore

$$M_w = f_d W_w / M_s - W_w$$

Moisture content of gobar

In Nepal, the common feedstock is gobar (cow or buffalo dung). Since the moisture content of gobar varies with the climate, it is impossible to give workable recommendations of the water-dung ratio unless the moisture content of gobar is known.

In the Terai (southern lowlands), the dry matter increases from about 15% during the monsoon to 30% during the hot dry season from March to June. To maintain the same moisture content in the input slurry, the amount of water required during the hot dry season should therefore be twice that during the monsoon.

Other workers have done experiments to correlate the solids content with the specific gravity reading on a hydrometer (Idani, et. al. 1974). If the correlation is high, plant operators can be taught to add water to the feed until the desired reading is reached. However, in practice, we observed that the response of the hydrometer became erratic beyond 8% solids content, because of the presence of particulate matter in the slurry.

Since specific gravity increases with the solids content, another method to determine the latter is by measuring the weight of a known volume of slurry. Since a large variation in solids content only brings about a small change in specific gravity (Table 5a1), the weight has to be measured fairly accurately and would not be practical in a village situation.

Table 5a1: The specific gravity of slurry of different solids content

Sample Gobar	Water	Specific gravity	Solids content %
89.25g (75ml),	no water	1.19	24.2
same	62.5ml	0.99	14.2
same	120 ml	0.98	10.32
same	125 ml	0.97	9.0

After defecation, the animal dung is exposed to the atmosphere and loses water at a rate depending on environmental factors such as the humidity, temperature, and rainfall. Thus, one can probably predict the solids content by knowing these climatic indicators. To investigate this hypothesis, the solids content of buffalo dung (less than one day old) was determined twice weekly from duplicate samples over a period of 20 months in Butwal. For correlation, climatic data were collected from a nearby metereological station (Table 5a2).

Table 5.2: Dry Matter Content of Gobar and Climatic Data of Butwal

Month	Gobar dry-matter, % (Y)	Relative Humidity (H) 8:30	17:30	Mean %	Temperature (T) Max	Min °C	Mean	Rainfall (R), mm
Year 1981								
3	29.6	49.7	42.2	46.0	31.2	18.5	24.9	26
4	25.3	51.4	49.5	50.5	34.0	22.4	28.2	45
5	18.9	58.5	51.9	55.2	35.0	24.4	29.7	110
6	18.1	63.2	54.6	58.9	37.2	26.7	32.0	345
7	15.7	83.5	79.4	81.5	33.4	25.9	29.7	1101
8	16.1	82.0	81.6	81.8	33.1	25.9	29.5	1090
9	16.8	75.4	78.8	77.1	32.7	24.9	28.8	487
10	20.1	65.9	66.9	66.4	31.8	21.7	26.8	0
11	20.2	61.1	67.7	64.4	28.4	17.8	23.1	34
12	22.9	61.7	68.7	65.2	25.9	14.1	20.0	0
Year 1982								
1	24.4	67.8	68.4	68.1	24.6	14.0	19.4	16
2	27.6	70.4	59.7	65.1	24.4	13.2	18.8	2
3	28.1	58.5	52.0	55.3	29.1	21.7	25.4	83
4	25.1	50.5	37.6	44.0	35.5	22.8	29.2	19
5	23.9	46.4	38.4	42.4	38.2	24.8	31.5	47
6	18.3	81.0	72.6	76.8	34.4	25.3	29.9	547
7	14.5	81.4	75.5	78.4	33.6	25.9	29.8	683.5
8	14.5	76.7	81.0	79.3	33.7	25.9	29.8	513
9	14.6	78.0	77.5	77.8	32.0	24.2	28.1	426.5
10	16.9	64.3	67.4	65.9	31.6	21.9	26.8	14

Using the above data, the correlation coefficients, C, were calculated for all the combinations of any two of the four variables: gobar dry-matter (Y), relative humidity (H), temperature (T), and rainfall (R). All together, there are six correlation coefficients, and their values are given below:

C(YR) = -0.685 C(YH) = -0.762 C(YT) = -0.533
C(RH) = 0.734 C(RT) = 0.501 C(HT) = 0.046

The correlation between Y and any of the three climatic variables is quite appreciable. The correlation between H and T is low, therefore these two variables must be included in the regression equation for the prediction of Y. The correlation between R and H and between R and T are both quite appreciable, so if the addition of R does not add much accuracy to the prediction, it can be omitted from the equation for the sake of simplicity. The test of the significance of R is shown below.

From graphs, Y can be shown to be inversely linear to T, and roughly proportional to 1/H and to R. A regression equation for Y is thus obtained with the three climatic variables.

$$\hat{Y} = 23.19 + 3.51 \times 10^{-3}R + 1267.01/H - 0.883T$$

$$r^2=0.87, \quad r=0.93$$

The overall correlation coefficient, r, is high, being 0.93.

T-test showed that both 1/H and T are significant beyond 0.1%, but R is only significant at the 10 to 20% level and is therefore not as important as H or T.

If R is omitted, the regression equation becomes:

$$\hat{Y} = 23.29 + 1033.82/H - 0.7126\ T$$

$$r^2 = 0.85, \quad r = 0.92$$

Since the overall correlation coefficient r decreases by only 0.01 (from o.93 to 0.92), it is safe to omit R in the equation.

Thus for prediction of the dry-matter of dung, we can use:

$$Y = 23.3 + 1034/H - 0.71T$$

According to climatic records, there is no appreciable variation in the average monthly temperature and relative humidity over the last ten years. This equation is thus applicable in the Terai and places with similar climate. Extrapolation for Kathmandu which has a temperate climate has resulted in prediction of a wide error margin. However, this method can be applied for different climate and animal species provided that the appropriate data are known. Our experiments showed that the dry matter content of buffalo and cattle are similar, but that of the horse is higher (Table 3).

Table 5a3: Dry-matter content of animal dung in Kathmandu

Species	Month	Dry-matter, %
Horse	Nov	28.2
	Dec	26.6
Cattle	Dec	15.4
Buffalo	Dec	15.1

Measurement of NPK

The fertilizer value of dung and effluent slurry can be measured in terms of nitrogen, phosphorus, and potassium (NPK).

Ammonia and organic nitrogen are determined by Total Kjeldahl method (Perrin, 1953).

For the determination of phosphate, volumetric or calorimetric methods can be used (Standard Methods, 1955). Potassium can be determined by flame photometric method (Wander, 1942).

The details of these procedures will not be presented here, since these are standard methods with numerous references.

307

REFERENCE:

House, D (1978) The Complete Biogas Book. VAHID, Rt. 2 Box 259, Aurora, OR 97002, USA.

Idani, M.A. and Vanadarajan, S. (1974) Fuel Gas and Manure, by Anaerobic Fermentation of Organic Material. Indian Council of Agricultural Research, New Delhi.

Perrin, C.H. (1953) Rapid Modified Procedure for Determination of Kjeldahl Nitrogen. Analytical Chemistry. Vol. 25(6):968.

Standard Methods (1955) For the Examination of Water, Sewage, and Industrial Wastes. Tenth Edition. American Public Health Association, Inc. 1790 Broadway, New York, USA:

Van Soest, P (1978) Forage Fiber Analysis. Agricultural Handbook No. 379. Agricultural Research Service, US Dept. of Agriculture.

Wander, I.W. (1942) Photometric Determination of Potassium. Ind. Eng. Chem., Anal. Ed. 14:471.

Use of Gas Meters

Many different types of gas meter are available commercially, but most seem to be affected by the corrosive gases in biogas. A simple bellows type domestic gas meter was used by DCS, but the tinplate housings and the steel movement quickly became rusty and made the meter unusable. A wet type gas meter, with a rotary movement, was purchased, which has worked better. The brass counter movement of this meter, too, was affected by a slight leakage of biogas from the main shaft seal. It became covered in a black deposit (lead sulphide?) which interfered with its operation. The rotor, which was also made of brass, could not be inspected to see if it also was affected. If the rotor was held together with solder, which has a high lead content, it could be attacked by biogas, over time, resulting in degradation of the solder.

The wet type gas meter is designed to be an accurate laboratory tool, but there are limitations on its use. It is designed to work with low gas pressures, 150 to 200 mm WG. When the DCS meter was used with gas from a dome plant, a solder seal at the back cracked. The normal wet type meters tend to be expensive, but not very robust.

It was decided in DCS to design a version of the wet type meter that would not be corroded by biogas and could also take the higher pressures from displacement digesters. This type of meter uses a rotor that has 4 seperate chambers in it (Figure 5.2). Gas enters the first chamber (1) from a central gas inlet pipe, and water is displaced out of the chamber into the body of the meter. The opposite chamber (3), then has more water in it, so is heavier and the rotor rotates under this imbalance of weight. Water then enters this chamber (3), through a central water passageway, displacing gas into the upper half of the meter body and into the gas outlet pipe. If the rotor is made carefully, so no gas can leak between chambers, the meter will accurately measure the volume of gas that passes through it.

DCS Plastic Gas Meter

The DCS meter (Figure 5.3) was made of acrylic plastic (Perspex, Plexiglass), which can be solvent welded using chloroform. The accuracy of this meter did not have to be very high, so the tolerances on the dimensions were not tight. The main bearings were made of nylon, which is self-lubricating, especially if immersed in water. Allowance had to be made for the nylon swelling when it absorbs water. The sealing of a rotating shaft through the walls of the meter proved difficult, so a magnetic drive for a revolution counter was chosen instead.

Acrylic plastic sheet can be softened by warming it to the correct temperature, so it can be moulded to shape. If it is made too hot, the surface will tend to bubble and craze.

The curved walls of the rotor compartments are made by placing sheets of softened plastic (2 mm) between two shaped forms made of wood. when the sheets cool, they remain in the correct shape. Two acrylic sheets can be welded by holding them together and running chloroform between them with a brush or dropper. Chloroform is very volatile, so the joint dries quickly, It is also strong smelling and toxic, so it should be used in a well ventilated place. A glue can be made by dissolving small pieces of acrylic plastic in a bottle of chloroform. Holes should be filled by spreading on several thin layers of this glue, as a thick layer tends to trap air bubbles, which leave holes that can leak.

304

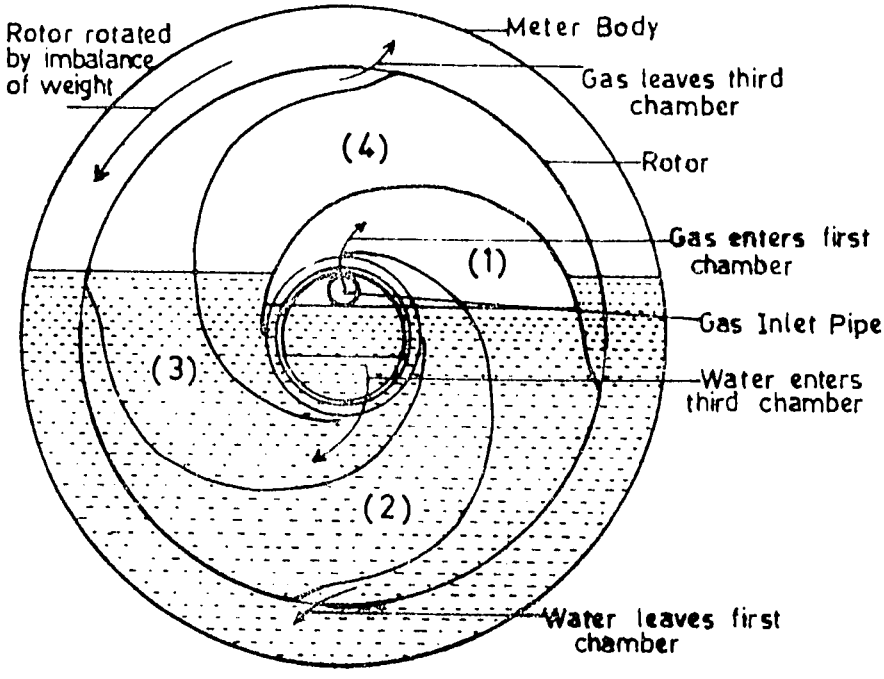

Figure 5.5 Mechanism of a Wet Type Rotary Gas Meter.

The body of the meter was originally made as a square box, but the corners tended to crack under internal gas pressure. A cylindrical body was designed, using a long (2 mm) sheet of plastic, which had been heated and wrapped around a cylindrical mould, and fitted into a circular groove cut in the side pieces (6 mm thick). The strain of the gas pressure on the flat sides of the box is taken by 5 steel bolts that run the width of the meter.

The meters were calibrated, using air from a small compressor, against an accurate commercial meter. The volume of gas passed for each rotation of the rotor proved to be smaller than calculated, so was not an integral number of litres. A slight difference in the level of water in the body can have a large effect on the calibration. The water level that ensured the rotor ran smoothly without leaks proved to be higher than exactly half-way up the rotor. A line was scribed on the side pieces to indicate the correct water level. The meter must be carefully leveled by placing wedges under the corners, until the water surface inside the transparent sides meets these lines at all points.

Some of these meters were used in field trials of dome plants and seemed to work reasonably well. They were not completely reliable, as the counter sometimes missed count. The counter arm was made longer, to increase the torque on the counter mechanism. A better type of counter was also found. These improvements are shown in Figure 5.3). This type of meter is useful for experimental work, but it is not relaible or robust enough for commercial use.

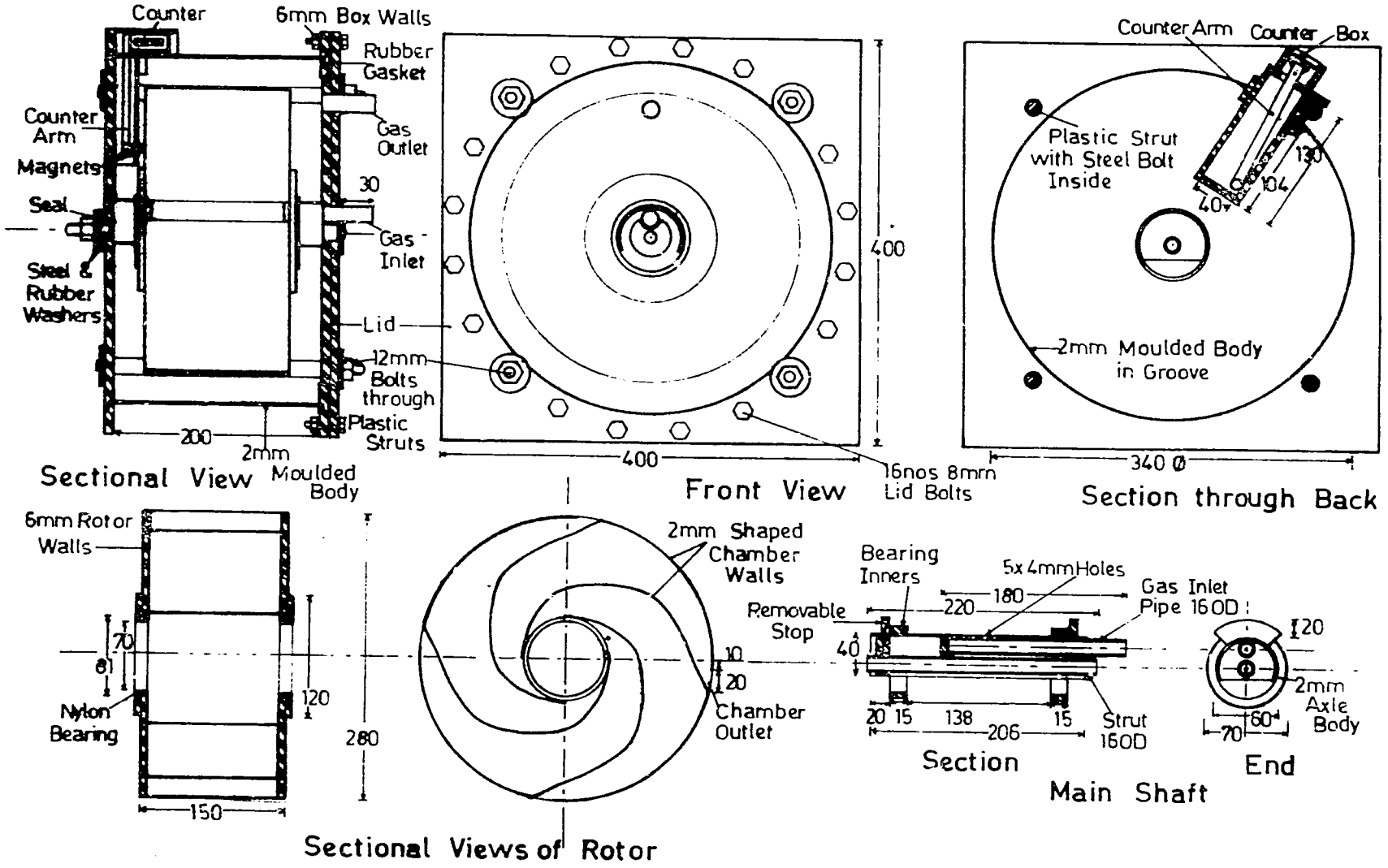

Figure 5.6 Design of Plastic Wet Type Rotary Gas Meter

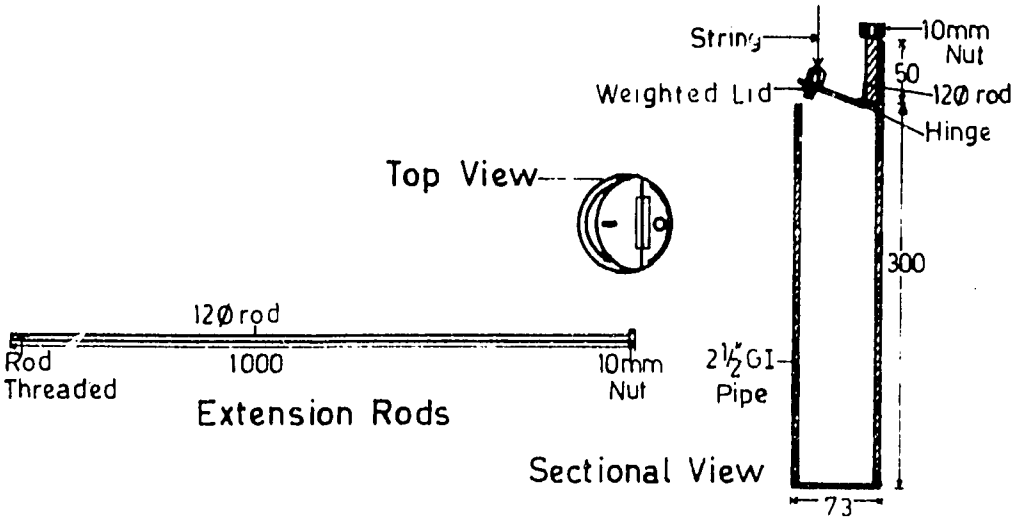

Figure 5.6 Slurry Sampling Device.

Measurement of Slurry Temperature

The slurry temperature was measured in DCS by removing a sample of slurry in a device made for the purpose (Figure 5.6). The shape of the device enabled it to be passed down the inlet or outlet pipes of a drum plant, so the temperature at the bottom of the digester pit could be measured. One experimental drum was made that had 4,114 mm OD pipes running the whole height of the drum, closed off at the top with screw caps. Using these pipes and by rotating the drum to different positions, slurry samples could be removed from almost any part of the digester pit. A mercury-in-glass thermometer was used to measure the temperature of the samples.

Later DCS was able to purchase a recording thermograph, with two bulb type temperature elements, and a dial type max-min soil thermometer. Both were fitted with one bulb that had a 5 m length of armoured capillary connecting it to the read-out unit. The temperature at any point inside a biogas plant could be measured by pushing the bulb to that point. The second bulb of the thermograph was mounted on the oase so that the ambient temperature could also be measured. The chart recorder on the thermograph was driven by a clockwork motor, so it did not need an electrical supply. These instruments allowed us to measure the daily variation of temperature, both within and outside a biogas plant.

Measurement of Slurry pH

A set of pH papers was used to measure the slurry pH. A strip of paper is soaked in a solution of indicator, that changes colour when placed in a liquid of a particular pH. By selecting indicators, the whole range of pH can be measured to an accuracy of about ±0.5 pH. Such a set of pH papers are available commercially.

DCS was later able to purchase a pH meter, which could read to ±0.05 pH directly from a scale. It was run on batteries, so was portable and it was fairly robust.

Enhancement of Biogas Production in Cold Climate

M. Lau-Wong

6.1 The Temperature Constraint

Biogas technology would have enjoyed a much wider acceptance and applicability had it not been limited by a natural constraint - temperature. As the biogas microflora is sensitive to temperature changes, a decrease in fermentation temperature induces a concomitant reduction in gas production. The onset of winter in subtropical and temperate regions often requires the use of an alternate back-up fuel when production of biogas diminishes. Below 15°C, degradation of the substrate proceeds extremely slowly, demanding a longer retention time of the substrate than at a higher temperature. In regions beset by severe winters, like Liaoning in China, biogas plants operate only during the six warmer months of the year; in winter, gas production ceases altogether (Eggeling and Stephen, 1981).

In contrast to aerobic mesophilic processes in which cooling is often necessary, anearobic digestion generates much less heat - about 7 times less for the decomposition of glucose.

		Free energy, ΔF, kcal/mol
Anaerobic	$C_6H_{12}O_6 \rightarrow 3CH_4 + 3CO_2$	-102
Aerobic	$C_6H_{12}O_6 \rightarrow 6CO_2 + H_2O$	-688

The small amount of heat generated from biogas process readily dissipates to the surrounding in the winter time, and gas plants should therefore be insulated or heated by external sources. Most gas plants are heated to operate at mesopholic temperatures (30 - 35°C). Although higher fermentation rates are obtained at the thermophilic range (55 - 65°C) (Hamilton Standard, 1978; Zoetemeyer, et al, 1979), a thermophilic process is not economically viable, especially for small household plants in temperate regions.

Heating the digester with the generated gas has been practised in some big operations. In one case, however, propane gas was used to supplement the biogas and as fuel for the pilot light of the boiler for reliability (Jewell, et al, 1981). From economical and practical considerations, this system is not feasible for small-size plants (3 to 10m^3 digester volume); and alternatives that require low capital cost, maintenance and labour should be explored. In the following sections some of these methods along with experimental trials will be discussed.

6.2 Insulation

Temperature gradient of the earth

Since biogas plants are built at or under ground level, an understanding of how heat flows in the earth is essential to designing for low temperatures. From mining experience, it is well-known that temperatures increase with depth in the interior of the earth. Many deep-drill holes have been made to measure this heat flux, also known as geothermal gradient. It was found to vary between 10°C to 50°C per km on land (Carslaw and Jaeger, 1959). The temperature profile near the surface, however, is more complicated. As land near the surface is exposed to diurnal and seasonal variations of intensity of insolation (solar radiation), its temperature fluctuates accordingly and heat can flow either in or out depending on the time of the day or year. During daytime, the soil surface is warmed by insolation, while at night the absorbed heat reradiates back into space, the heat loss being more on a clear night. This diurnal fluctuation of soil temperature virtually vanishes below one metre (Russel, 1979), and thus exerts little influence on the internal temperature of a subterranean biogas plant. In contrast, seasonal variation of temperature has a more profound effect on the performance on biogas plants. In equatorial regions, seasonal fluctuation almost ceases at a soil depth of one metre, but in temperate regions, it diminishes only below 6 to 8 metres (Holmes, 1964).

Apparently, one plausible solution to the problem of heat loss in winter is to build plants at a depth where the temperature is fairly constant and agreeable to the microflora. But this may require excavation to below 10 to 15 metre which is a difficult if not impossible task. The existing plant designs also need to be modified for adaptation to the greater depth. To circumvent this, a plant can be built not far below the surface with removable insulation installed above the plant in winter. This not only avoids deep excavation but also allows quick penetration of insolation and heat when the cold season is over, simply by removing to insulating layer..

Figure 6.1 depitcts a typical set of winter isotherms of the soil in Kathmandu, Nepal. As heat flux vectors are perpendicular to the isotherms, they flow upwards and finally emerge normal to the earth's surface. In the absence of heating or insulation, there is little net flow of heat horizontally across the digester to the surrounding soil. However, with insulation above the plant, the isotherms are distorted as shown in Fig. 6.2. The heat flux vectors are deflected sideways from the walls of the plant before emerging at the earth surface. It is therefore crucial to insulate the plant well at the top surface rather than at the sides, although ideally, it should be done at both places. Insulation only at the surface has another advantage. If the plant is insulated at the sides, moisture entrapped in the insulating material is difficult to remove and a wet insulator automatically loses its insulating capacity. Whereas surface insulation are relatively easy to dry under the sun. Wet ground also loses more heat.

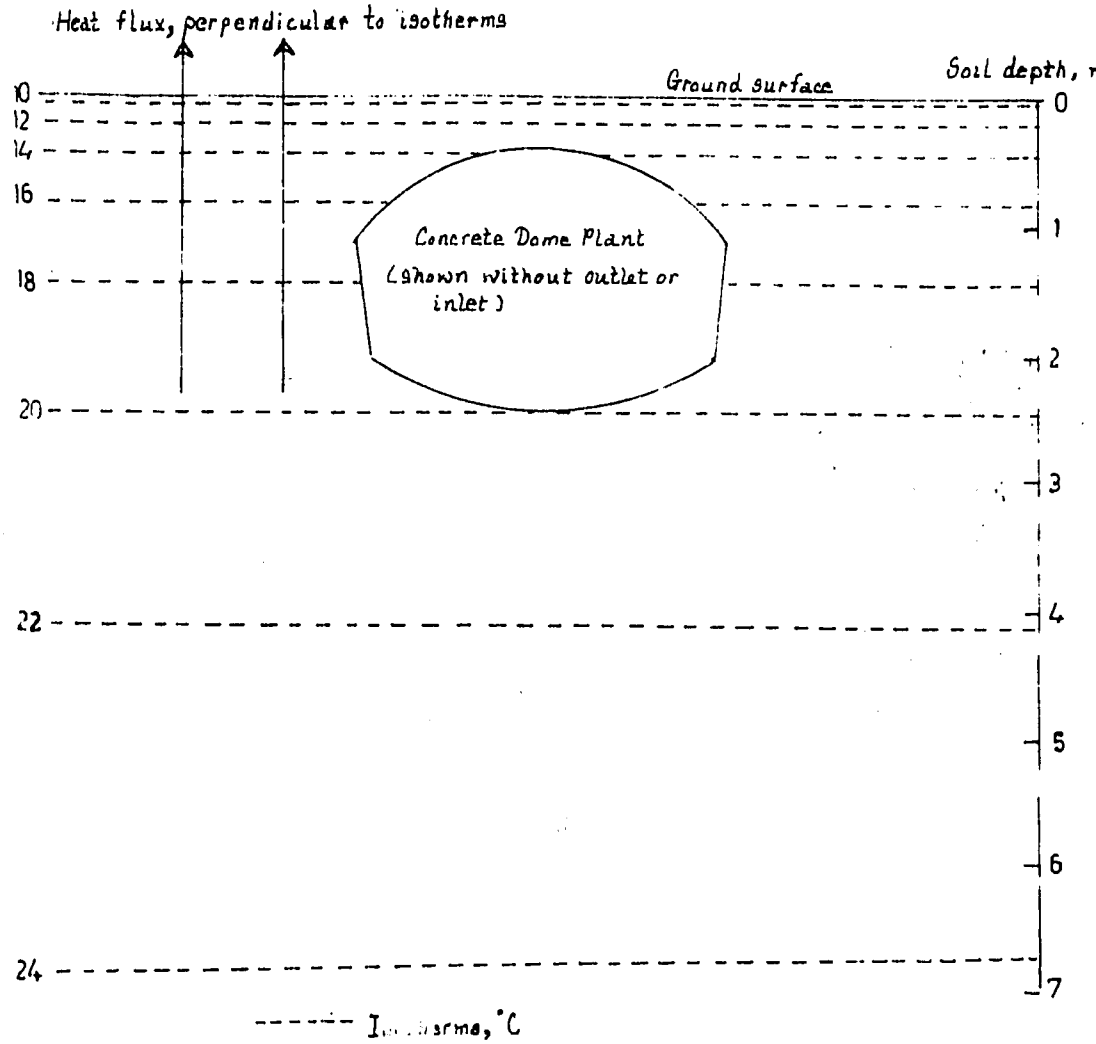

Figure 6.1 January soil isotherms at 8:40 a.m. in Kathmandu

310

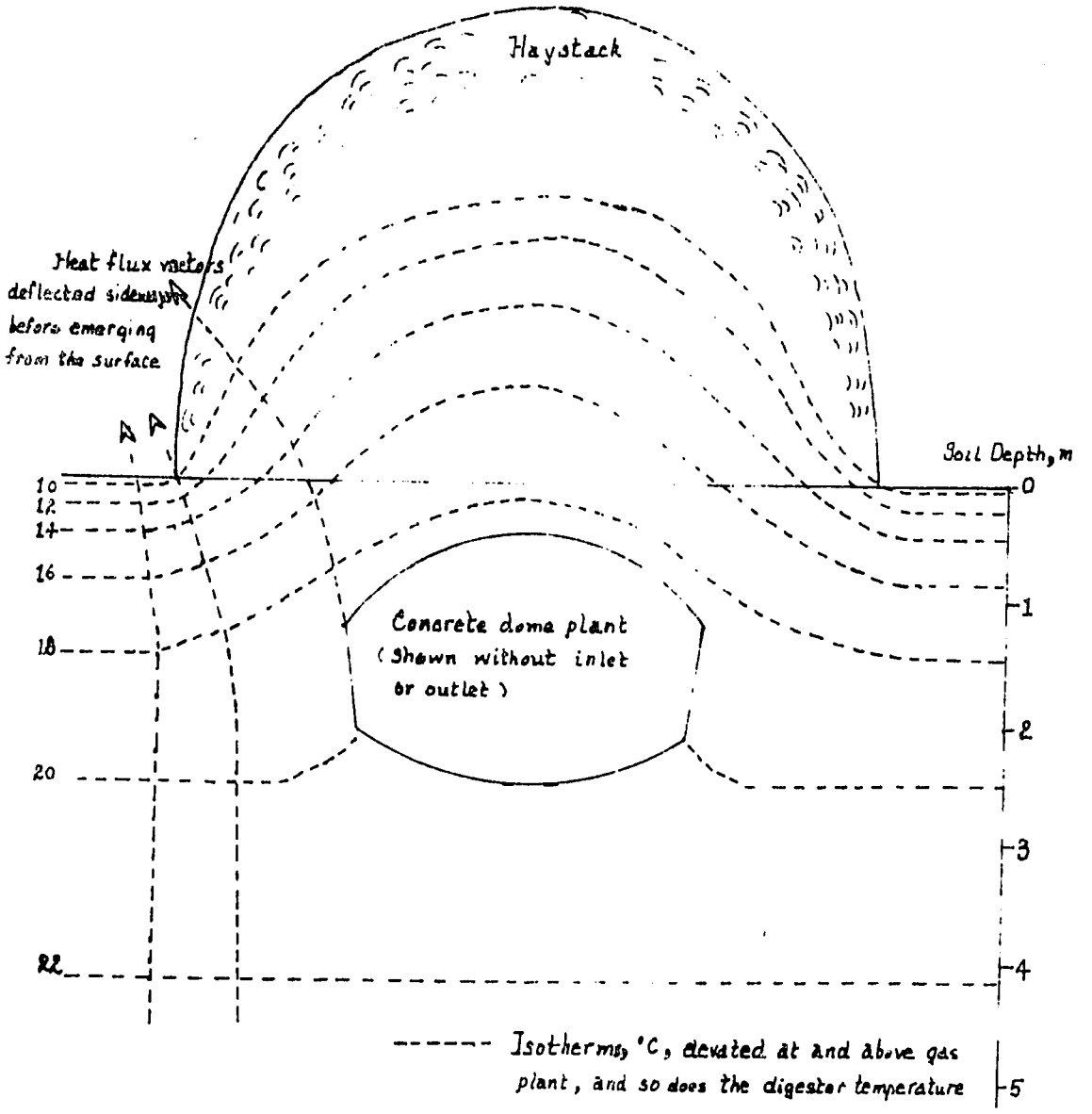

Figure 6.2 January soil isotherms distorted by haystack (Kathmandu)

311

Insulating with local materials

Plastics and fibre glass are good insulators but their prohibitive prices and unavailability in some places render them unsuitable. Local materials should therefore be explored as alternatives. Cereal straws, rice husks, saw dust and shavings are good insulating materials when dry (Table 6.1). Their thermal conductivities are 23 times lower than that of soil and comparable to that of typical insulators.

Straws and corn (maize) stovers are particularly abundant at harvest time. They can be erected in stacks above the plant with sloping sides. The slope enables rain and condensates to run off leaving the insulation dry.

Table 6.1 Thermal Conductivities of Materials

(Adapted from Weast and Astle, 1979)

Material		Thermal Conductivity, W/M°C
Concrete		1.0
Soil (fairly dry)		1.4
Saturated soil		2.4
Saw dust (loose)		0.06
Shavings (loose)		0.06
Insulators:	Sugar cane fibre	0.05
	Insulite (Wood pulp)	0.05
	Glass wool	0.04

Plastic Cover Over Insulation

Plastic sheets like polyethylene can be used as a cover over insulating materials to reduce the amount of material required. As light penetrates the plastic, it is transformed into the longer heat waves or infrared. The heat enhances evaporation of moisture from the insulating material and ground below. Being trapped by the plastic, this moisture condenses as a film of water droplets on the undersurface of the plastic and acts as a barrier to radiation losses of the accumulated heat inside.

Vegetation

Vegetation such as grass or mulches has a blanketing effect that reduces both the diurnal and seasonal fluctuations of soil temperature. It reduces penetration of frost in winter, and like insulation, enables the soil to cool down more slowly in cold season than bare soil. Soil with a turf cover is warmer in water than bare soil. However, vegetation alone is inadequate in maintaining a reasonable operating temperature in winter.

6.3 Comparison of the Effects of Composting and Insulation

To evaluate the effectiveness of composting and insulation in increasing digester temperature in winter, experiments were conducted on three dome-type plants on private premises in Kathmandu. (Lau-Wong, 1982). Kathmandu Valley is at an elevation of 1324m. In winter, temperatures never fall below freezing but early morning frost is common and a cold damp fog envelops the Valley and rarely clears away before 10 am.

A $15m^3$ dome plant (S) was initially insulated with rice straw sandwiched between two plastic sheets at the end of September; but rotting of the straw one month later prompted its conversion into a compost pile. (Methods for Construction is given in Vol.I,Ch.10). Even at sub-zero temperatures, compost can generate significant amount of heat from aerobic decomposition of organic matters. The compost pile ,0.7 to 0.8m high, covered an area of 5 x $5.5m^2$ on the ground above the plant. Another $15m^3$ plant (B) which had a 15 to 20cm grass cover was used as control. A $10m^3$ dome plant (K) was insulated at the ground surface with rice straw in late November. It was 2m high and sloping to 0.8m at the periphery. A polyethylene sheet covered the straw and was held down loosely at the sides with bricks. A haystack of 5m height and width was built in mid-January.

The areas of the compost and insulation were distinguished into 4 quadrants. Temperatures were measured at different locations at each quadrant daily by rotation, thus ensuring a more even sampling.

Table 6.2 showed that installations of compost, straw insulation, and haystack effectively increased diurnal fluctuations of ground surface temperature. The ground was shielded from insolation, but heat loss from the interior was also abated. Compost showed the best performance because of internal heat generation, although the large sample standard diviation indicates ununiform decomposition in this case.

Table 6.2 Influence of compost, haystack, and straw insulation on ground temperature (Jan.25 to March 13, 1982)

	Temperature °C					
	Minimum			Maximum		
	T	S	n	T	S	n
Compost	14.1	3.5	38	23.5	6.6	37
Haystack * 1	10.4	1.5	9	13.8	2.3	9
Straw with Plastic (k)	6.6	2.5	99	24.7	5.3	99
Soil Surface * 2	0.3	-	-	-	-	-
Ambient Temp: * 3	3.9	-	-	19.5	-	-

Note: *1. Temperatures measured 1 to 1.5m inside haystack near ground surface.
*2. Minimum of bare soil surface (January).
*3. Source: Kathmandu Airport Meteorological Station (HMG)
4. S and n are the sample standard deviation and number of observations respectively.
5. Diurnal fluctuation is given by the difference between Maximum and Minimum.

These temperatures were plotted in Fig. 6.3. The slurry temperatures of a steel-drum plant on one of the site was also included. Being constructed above ground, the steel-drum plant responded more quickly to temperature drop in the environment. Whereas for dome-type plants, there was a greater lag since the cooling effect takes time to penetrate below ground level; daily fluctuations of slurry temperature were less (usually within 0.5°C), and the average temperature of an uninsulated dome plant was about 3°C higher than that of a steel-drum type. Insulation effected a higher temperature in dome plants in mid-November than other plants which either acquired no insulation or delayed insulation. After the straw insulation was converted into compost, the generated heat continued to maintain plant S at a higher temperature.

Higher gas production per kg dried input showed that the compost method is effective (Fig. 6.4). Gas production for the plant with compost (S) decreased in December since composting was done in late October, but remained fairly constant thereafter. In contrast, that of the uninsulated plant (B) decreased sharply in December with some fluctuations until March when production increased in response to increasing ambient temperature. Because of the insulating effect of the compost, the onset of warmer weather in March still had no influence on plant S. The increase in gas production due to composting was shown by dotted lines in Fig. 6.4. It rose from about 20% in November to a high of 80% in February, with an average increase of 54% from November to March.

6.4 Solar Heating

Location of plant

The selection of plant site has a tremendous influence on the amount of insolation it receives. In the northern hemisphere, a south facing slope is generally warmer than a horizontal surface which in turn is warmer than a northern slope. The plant should therefore be constructed without obstructions, especially on the south side.

Solar Heating of Influent

Passive solar heating of influent at the inlet can be used as an inexpensive means of heat input into the plant. Since radiation can only penetrate a small distance in slurry, the depth of the slurry in the inlet pit should be shallow. This is achieved by building shallower inlet pit of larger surface area. This also allows more exposure to insolation since the side walls are lower in height.

To prevent heat loss by forced convection (or wind) and back radiation, the inlet pit should be covered by a transparent material, such as plastic or glass. Plastic is preferred since it is easier and cheaper to replace when broken. Condensation on the under surface of the cover also helps to trap heat by preventing some back radiation loss.

Experiments were performed in Butwal, Nepal, to determine -

1) the effect of plastic cover
2) the optimal retention time of slurry in the inlet pit
3) the depth of penetration of solar radiation.

Having determined the latter, the inlets could be modified by making them shallower but with a larger surface area.

Figure 6.3 SLURRY TEMPERATURES OF PLANT WITH COMPOST, PLANT WITH VEGETATION, PLANT WITH DELAYED INSULATION, AND STEEL DRUM PLANT

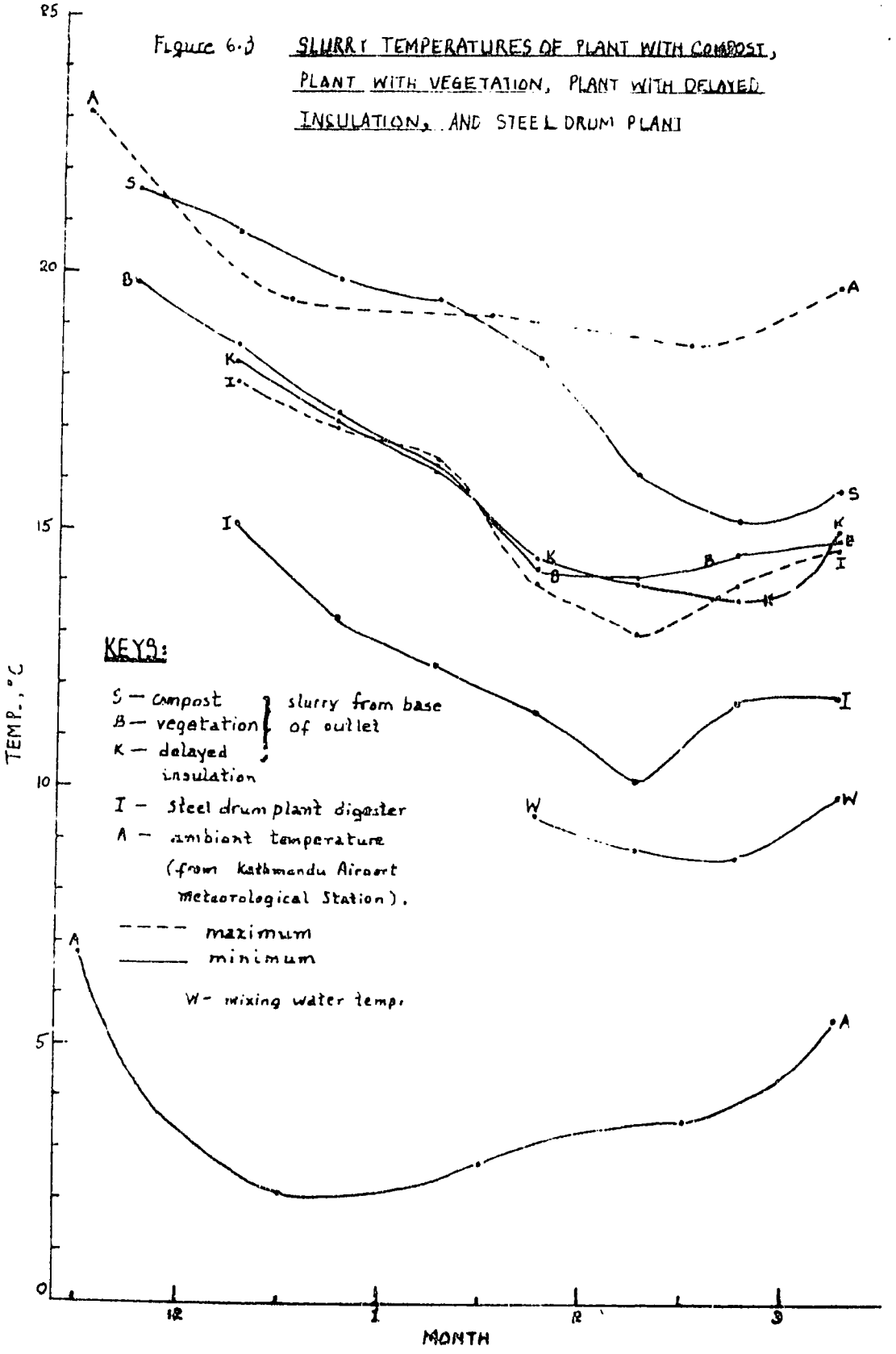

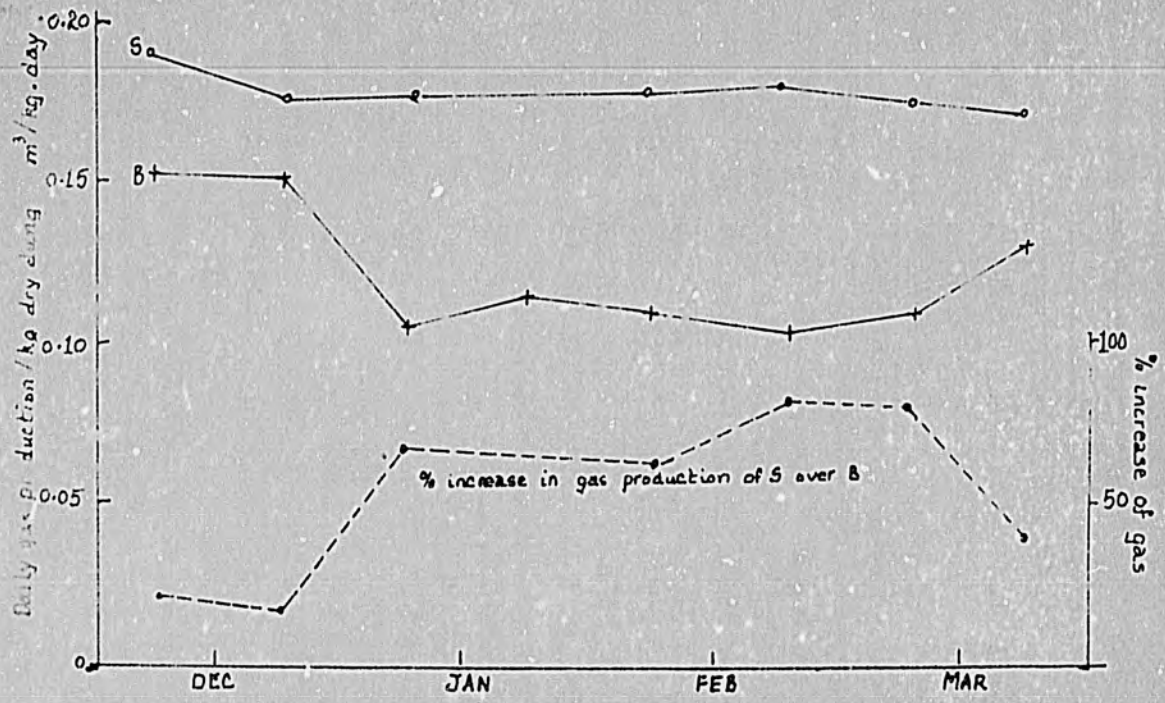

FIGURE 6·4 Comparison of gas production of plant with compost (S) and plant with vegetation (B)

316

On an overcast day, exposing influent in the inlet pit without plastic cover hardly increased the bulk slurry temperature. With plastic cover, only a modest increase is achieved. On a clear day when both direct and diffuse radiation are incident, the effect on influent temperature was considerable, especially when plastic cover was used.

It was evident from Fig. 6.5 that irradiation had little effect on slurry below a depth of 12.5cm while it penetrated 2.5cm below the surface easily. Although enlarging the inlet would decrease the slurry depth and increase its bulk temperature, the larger area (6 times the original) and amount of building materials and plastic required call for a compromising alternative. A 7.5cm slurry depth was chosen. One inlet was modified to a square of $1.69m^2$ and with its height reduced to 0.15m, just high enough to prevent overflowing of slurry during mixing. Another inlet was made almost circular - an ellipse of axes 1.44 and 1.50m, with the same surface area and height as the former. Both inlets were covered with polyethylene sheets when mixing of slurry was completed.

Before modification of the inlets, the side walls obstructed much of the isolation, especially in early morning and late afternoon when solar altitude is lower and irradiation weaker. At 4 pm only a small fraction was under direct sunlight. The fraction under shadow had a lower temperature than that under the sun.

The influent temperatures for the modified elliptical and square inlets were depicted in Fig. 6.6 and 6.7. They were a maximum between 2 and 3 pm. The average bulk temperature $\bar{T}$, at 2pm was calculated by integrating the corresponding area on the graphs.

$$\bar{T} = \int_{x=0}^{x=7.5} T.dx \,/7.5 \;.$$

Where T is the slurry temperature at depth x, which varies from 0 to 7.5cm. The values of $\bar{T}$ were tabulated below, and their increases over mixing water temperature, Tw, were considerable, being 8 to 9°C on a clear day and 4 to 5°C on an overcast day.

Table 6.3 Increase of Average Bulk Temperature of Slurry (T) over that of mixing water (Tw) at 2 pm for modified inlets.

Temperature °C	CLEAR DAY		OVERCAST DAY	
	Square	Elliptical	Square	Elliptical
$\bar{T}$ (Slurry)	28.3	29.7	23.4	24.7
Tw (Mixing water)	19.7	20.8	19.0	20.0
$\bar{T}$ - Tw	8.6	9.1	4.4	4.7

317

FIG. 6.5 : TEMPERATURE OF INFLUENT AT VARIOUS DEPTHS WITH AND WITHOUT PLASTIC COVERING ON CLEAR DAYS

INLET BASE AREA : 0.8 x 0.8 m²

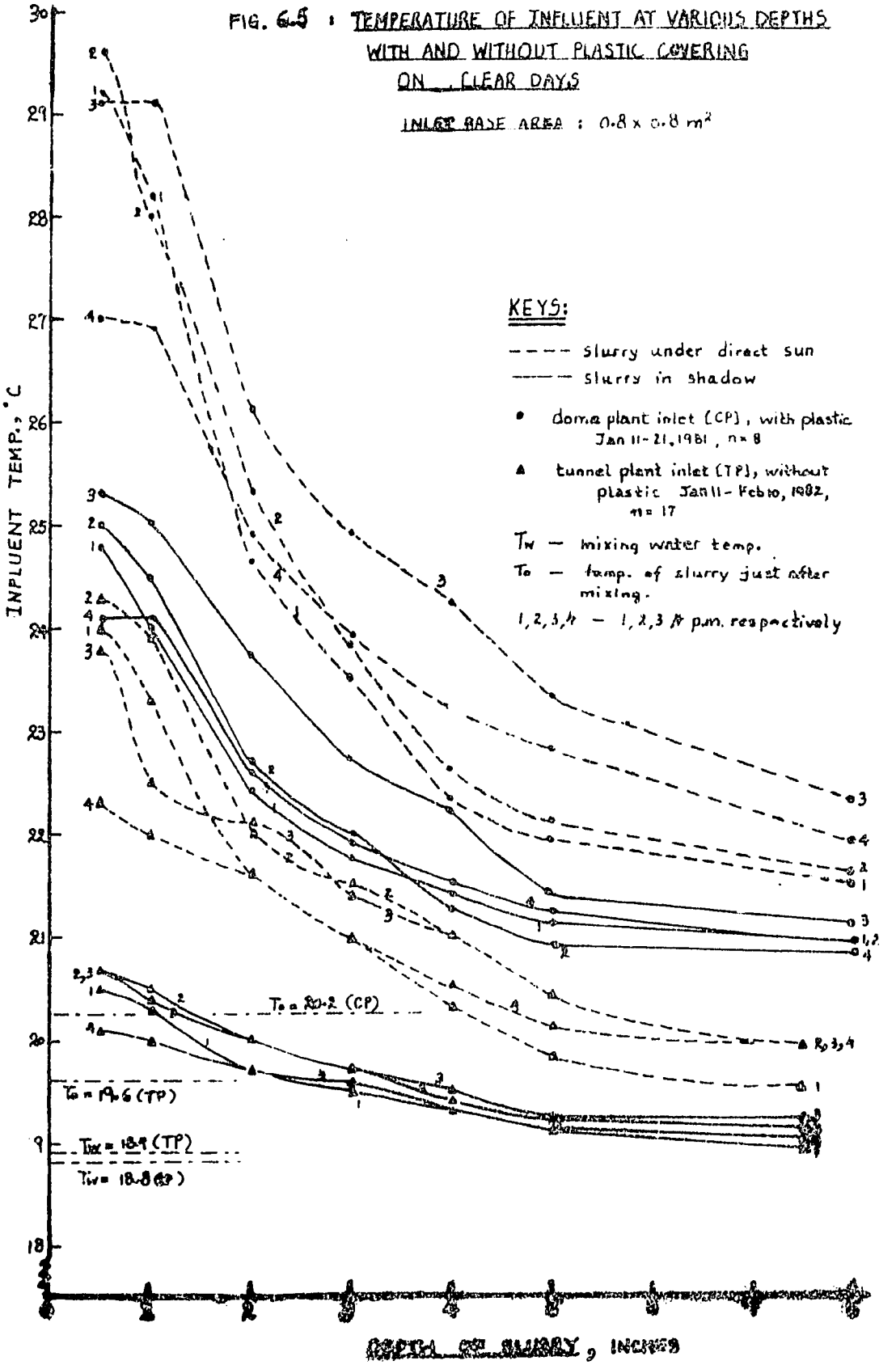

318

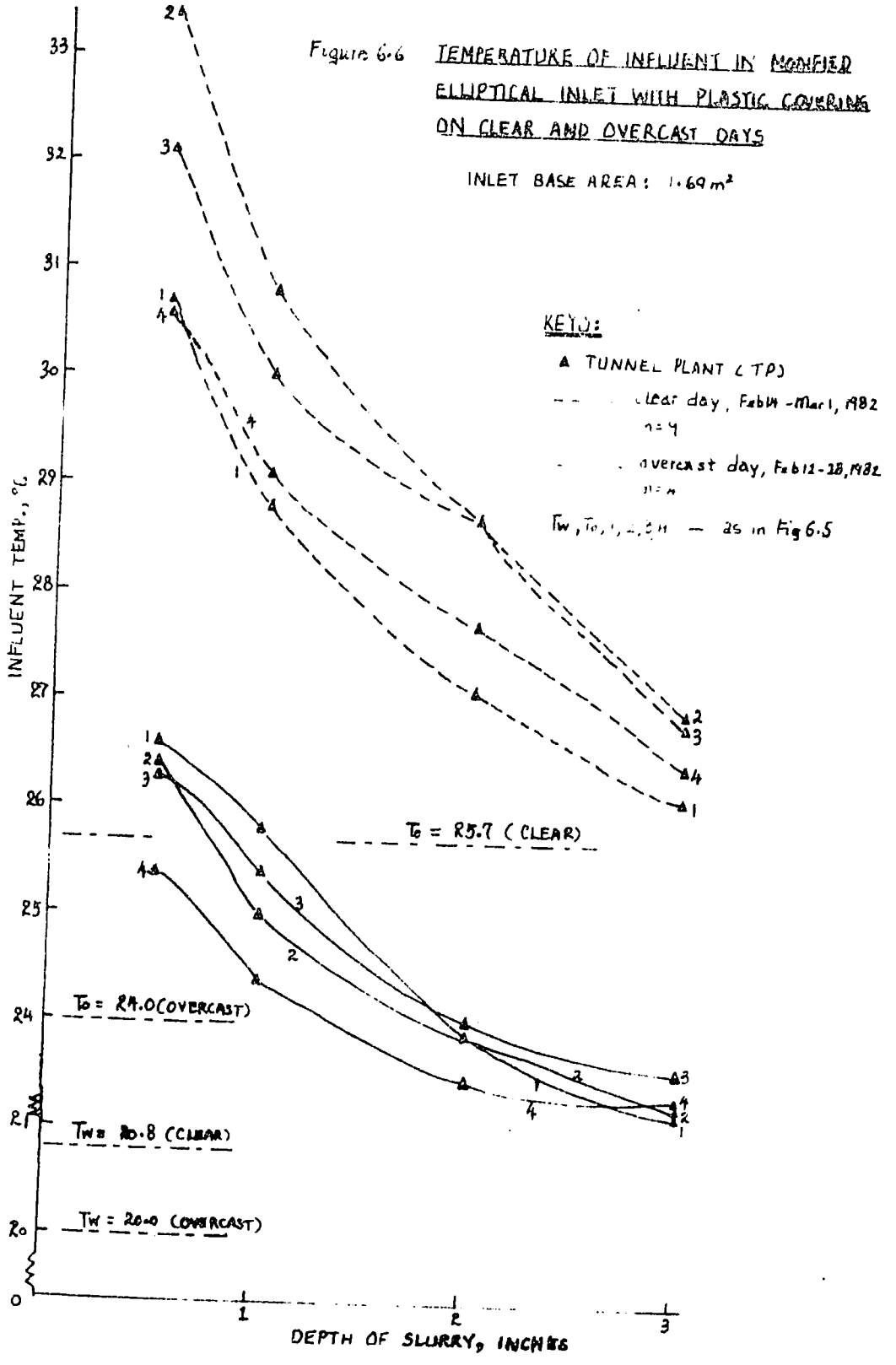
Figure 6.6 TEMPERATURE OF INFLUENT IN MODIFIED ELLIPTICAL INLET WITH PLASTIC COVERING ON CLEAR AND OVERCAST DAYS
INLET BASE AREA: 1.69 m²
KEY:
▲ TUNNEL PLANT (TP)
clear day, Feb14-Mar1, 1982
overcast day, Feb12-28, 1982
Tw, To, — as in Fig 6.5
To = 25.7 (CLEAR)
To = 24.0 (OVERCAST)
Tw = 20.8 (CLEAR)
Tw = 20.0 (OVERCAST)
INFLUENT TEMP., °C
DEPTH OF SLURRY, INCHES

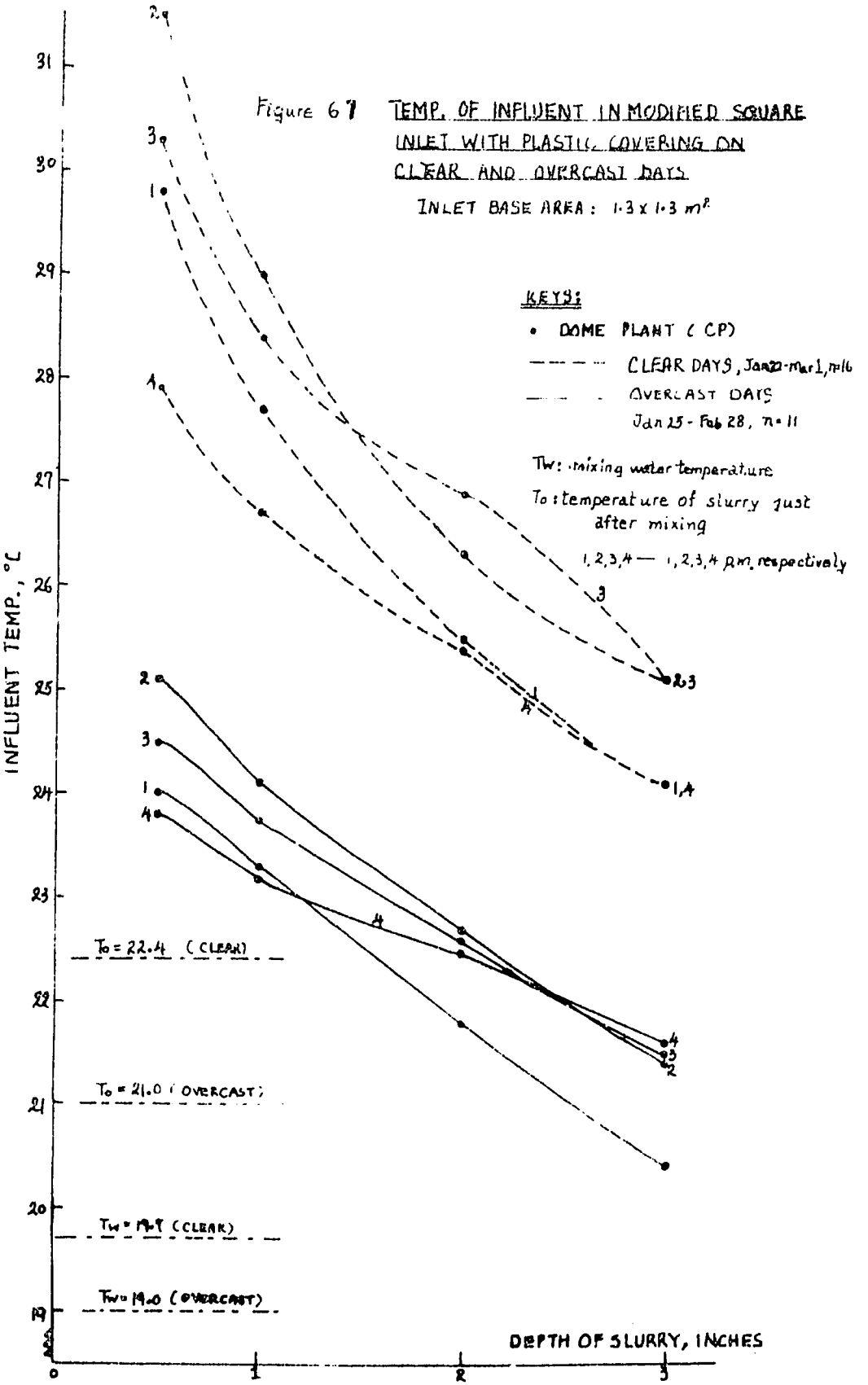

Figure 67 TEMP. OF INFLUENT IN MODIFIED SQUARE INLET WITH PLASTIC COVERING ON CLEAR AND OVERCAST DAYS

INLET BASE AREA : 1·3 x 1·3 m^2

320

For testing the durability of the polyethylene sheets (0.06mm thick), they were left in the fields even when not in use. Except for some lacerations during handling (mainly at the joints), they suffered no apparent damage from ultraviolet rays in one winter season. These sheets sustained more damage than they would normally have since the sheets had to be lifted hourly for temperature measurements. At present, one of the polyethylene sheet (2 x $2m^2$, 0.06mm thick) costs 10-15 Rs., therefore, the cost for winter heating is about 50 Rs. (US $4).

Similar experiments were performed in Kathmandu with the same results. Solar heating of influent under plastic increased the influent temperature by about 9^oC on a clear day and 4.5^oC on a cloudy day over that of mixing water, both in the Terai (Butwal 205m) and in Kathmandu (1324m).

Design for hilly areas

Hilly areas with south facing slopes can be exploited by building plants in the slope. A solar collector at a lower level is connected to a heat exchanger inside the plant (Fig. 6.8). Heated water in the black H.D.P. pipes in the collecter panel rises and circulation is established as it is cooled at the heat exchanger inside the digester. The plant should be insulated well to preserve the heat inside. In especially cold climate the solar collector must be insulated from frost and freezing temperature by straw or other appropriate materials. Otherwise frozen water in the pipes can expand and crack the pipes.

This system can also be applied at level ground. As the solar collector is situated above the digester, a circulation pump has to be installed to drive the warm water down to the heat exchanger.

Other Passive Designs

Erecting green house over biogas plant is another possibility though not widely practised. This method is feasible only if growing plants inside green house is an acceptable practice of that area. The green house should not be made of plastic films which has a high transmittance to infrared and permit much back radiation at night. Glass is the material of choice though it is more costly. In cold climate, heat loss can be reduced by half if double glass is used instead of single (Andersson, 1977).

Additional solar radiation can be absorbed by building a thermal storage wall inside the green house (U.S.D.E., 1978). It can be made of blackened masonry material and can form the side wall of plug flow plant. As radiation hits the blackened surface. The heat in the concrete is conducted slowly inwards, facilitated by convection of digester slurry on the other side.

6.5 Utilization of Waste Heat from Engines

In Nepal, the concept of utilizing biogas to run engines for irrigation, rice hulling, and flour milling is gradually gaining acceptance, especially among owners of community plants and large sized plants.

The engines used are mainly diesel engines converted to running on a mixture of diesel and biogas by the addition of a carburettor that mixes biogas with air. The consumption of biogas is 0.4 to 0.45 m^3 per hour. The engines can be installed with an air-cooling or water-cooling system. If water is used, the warmed water can be further heated at a heat exchanger with the engine exhaust gas. It then enters the digester through another single coil heat exchanger.

Water-Exhaust Gas Heat Exchanger

A double-pipe counter-flow exchanger was designed for the cooling water-exhaust gas system (Fig. 6.9). It is easy to fabricate and costs about 400 Rs. NC (US$ 33) for materials and labour. Exhaust gas enters the central G.I. pipe before emerging from the exhaust at the other end. Water from the engine enters the shell at the cooler end and flow in opposite direction to the exhaust gas. This type of flow, called counter current or counter flow, results in higher heat transfer than parallel flow design. In case of fouling (depositing of scale in pipes), the efficiency of heat transfer diminishes and the exchanger should be dismantled and cleaned thoroughly.

If the amount of cooling water flowing through the engine is more than required for the heat exchanger, the flow can be restricted by two valves at the water inlet end. In this way, different flow rates were adjusted when the exchanger was tested on a 8 H.P. engine, and the corresponding steady state temperatures were recorded. The inlet water temperature at the exchanger was 28.5°C. The outlet water temperature was plotted against the water flow rate (Fig. 6.10).

A pump for circulating water through the heat exchanger is necessary when the engine is used for hulling and milling, but not when pumping water. Heated water from the exchanger enters the plant via H.D.E. pipes which in turn is connected to a single coil inside the digester (Fig. 6.11). The whole assembly costs about 900 Rs. (US$ 70). To prevent heat loss, the exchanger and pipe fittings should be insulated - wrapping in dry jute bags worked well.

The overall heat transfer coefficient for the coil and digester slurry was estimated to be 170 w/m°C with fouling (Perry and Chilton, 1973), and the length of coil required is 11m (Lau-Wong, 1982).

If ambient temperature is 20°C, the plant can be maintained at 23 to 24°C by heat generated from the engine if run 6 hours daily. But this requires 12m^3 gas for a 5 H.P. engine and a digester operating temperature of 28 to 30°C. It is therefore essential to apply insulation or solar heating of influent as an extra source of heat.

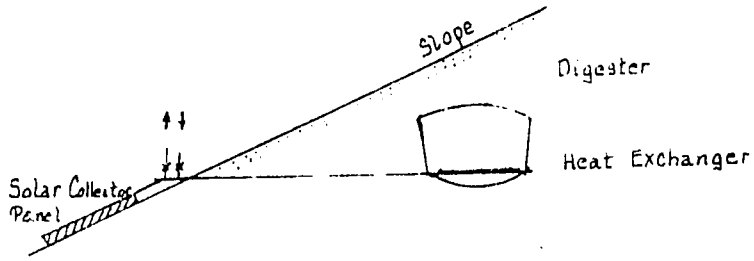

Figure 6.8 Solar heating of plant built in south-facing slope

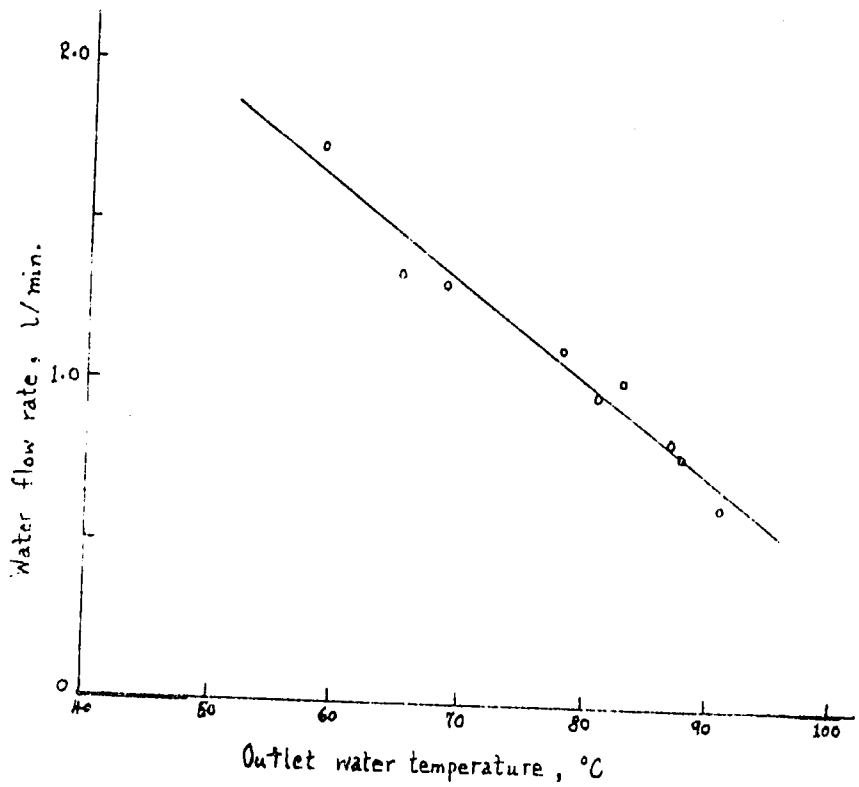

Figure 6.10 Heat Exchanger: temperature of outlet water vs. water flow-rate

323

FIG. 6.9 : HEAT EXCHANGER

SIDE VIEW

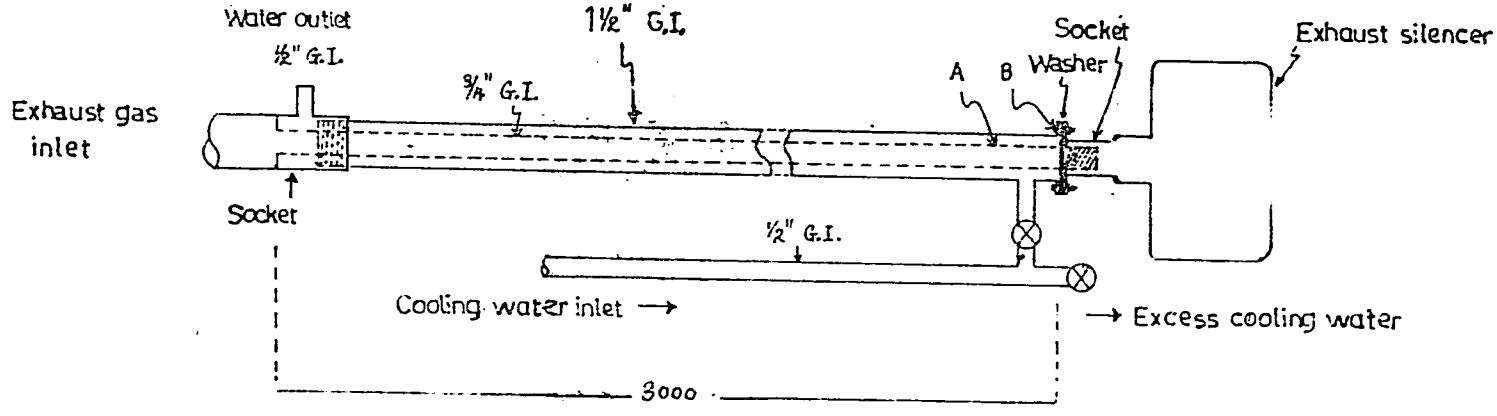

A.

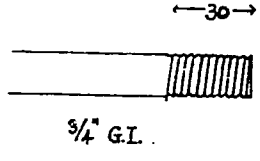

screw into socket for assembly

B. END VIEW AT B

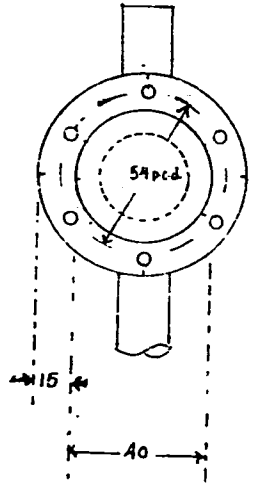

6 holes evenly spaced 7 ϕ
take 3/16" screws

324

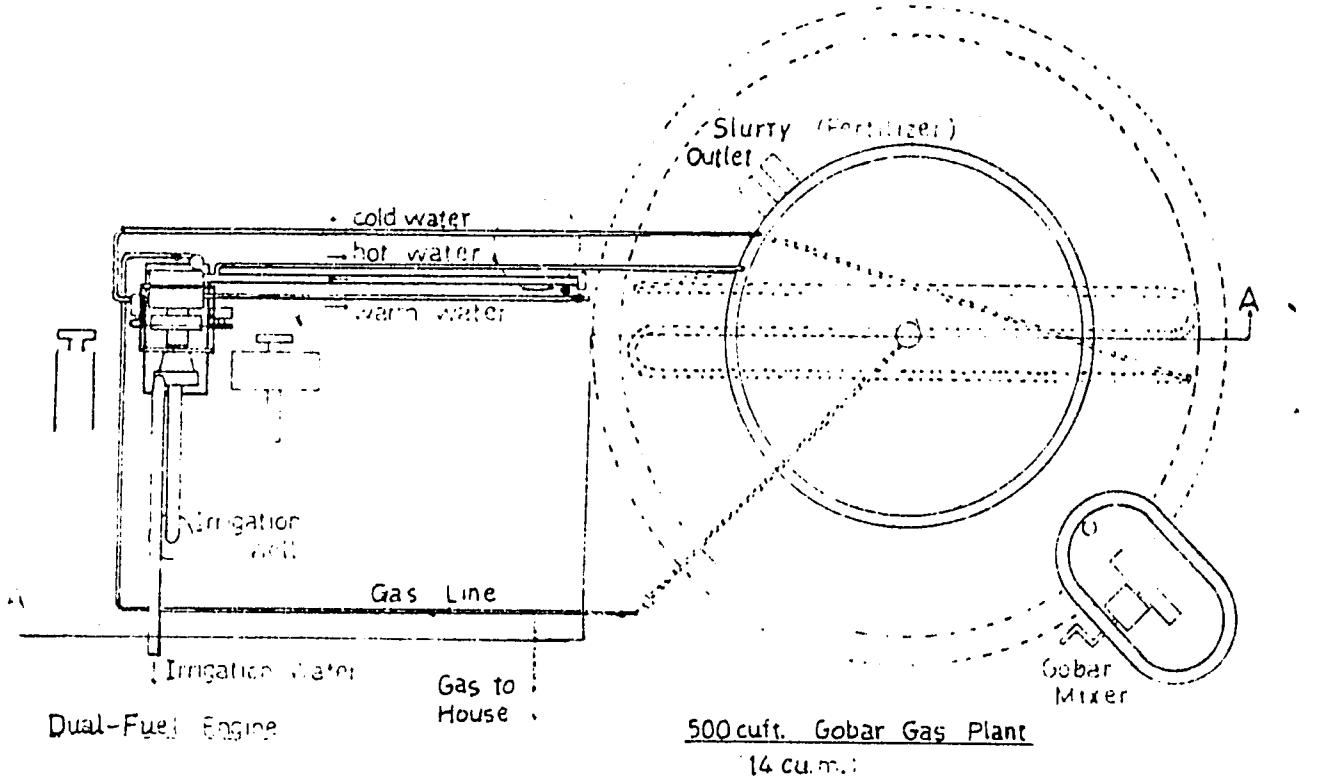

Site Plan (Scale 1:50)

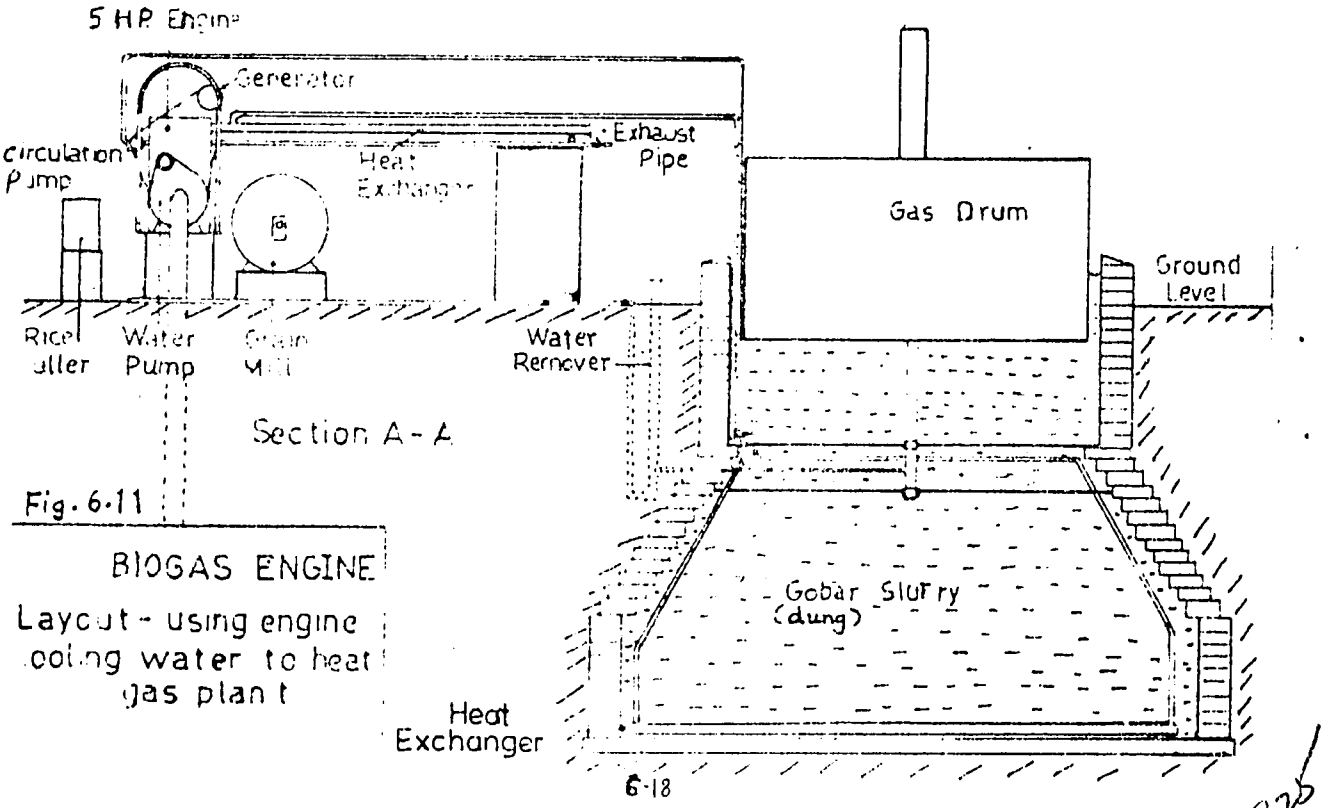

Fig. 6.11

BIOGAS ENGINE

Layout - using engine cooling water to heat gas plant

6.6 APPENDIX

Heat loss Calculations -

Heat loss from steel drum plant (34 m^3 digester volume)
All lengths are in meters:

$d_c = 0.23$
$d_m = 0.0025$
$l_1 = 0.70$
$l_2 = 0.35$
$l_3 = 1.15$
$l_4 = 1.22$
$l_5 = 1.05$
$r_1 = 1.40$
$r_2 = 1.68$
$r_3 = 2.34$

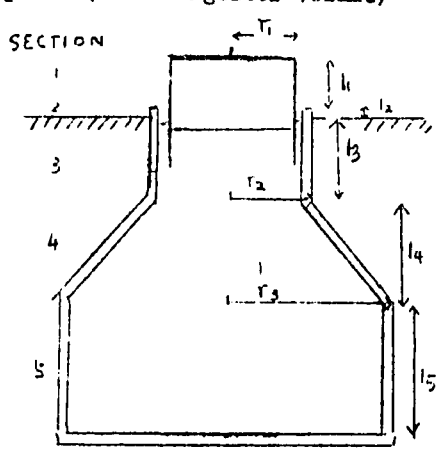

Let q_i (i = 1 to 5) be the heat loss from various sections of the plant.

T_A = air temperature
T_S = digester operating temperature
U_i = overall heat transfer coefficient at different sections
x = depth of soil

Heat transfer coefficient:	W/ m^2 C
Gas to steel drum, h_{GM}	10
Steel drum to air, h_{MA}	20
Slurry to concrete, h_{SC}	581.5
Concrete to air, h_{CA}	23.3
Soil to air, h_{SA}	5.8

Thermal Conductivity	W/ m C
Concrete, k_C	1.3
Steel, k_M	100
Soil, k_S	1.4

Assumptions:

1. The metal drum is half-way above the slurry and the remaining half has no effect on heat transfer.
2. Insolation and radiation losses from the plant are negligible.
3. Heat flux in the soil traverse vertically upwards.

226

Heat loss from section i is given by the equation:

$$q_i = U_i A_i (T_S - T_A)$$

Section 1:

$1/U_1 = d_M/k_M + 1/h_{GM} + 1/h_{MA}$

Substituting the corresponding values, $U_1 = 6.67$ W/m^2°C

A_1 = Area of the exposed top and side of the drum = 12.32 m^2

$q_1 = U_1 A_1 (T_S - T_A) = 82.17 (T_S - T_A)$ J/s

Section 2:

$1/U_2 = 1/h_{SC} + d_C/k_C + 1/h_{CA}$

Log mean value, $\overline{d_C}$, can be used instead of d_C

$\overline{d_C} = r_i \ln (r_o/r_i)$ where r_o = outside radius, r_i = inside radius

$U_2 = 4.80$ W/m^2 C

$A_2 = 3.44$ m^2

$q_2 = 16.49 (T_S - T_A)$ J/s

Section 3:

$1/U_3 = 1/h_{SC} + \overline{d_C}/k_C + x/k_S$

$U_3 = 1/(0.1786 + 0.7143x)$

$q_3 = \int U_3 (T_S - T_A) dA$

$= \int_0^{l_3} U_3 (T_S - T_A) 2\pi r_2 dx$

$= 25.46 (T_s - T_A)$ J/s

Section 4:

$U_4 = U_3$

$dA = m_1 (r_2 + m_2 x) dx$

where $m_1 = 2\pi\sqrt{l_4^2 + (r_3 - r_2)^2}/l_4 = 7.15$

$m_2 = (r_3 - r_2)/l_4 = 0.54$

$q_4 = \int_0^{l_4} U_4 (T_S - T_A) m_1 (r_2 + m_2 x) dx$

$= 33.94 (T_S - T_A)$ J/s

Section 5:

$U_5 = U_3$

$q_5 = \int_0^{l_5} U_5 (T_S - T_A) 2\pi r_3 dx$

$= 33.98 (T_s - T_A)$ J/s

q_6 = heat required for heating daily influent of 500 kg.

$= 500 \times 4184 \times (T_S - T_A)$ J/day $= 24.22 (T_S - T_A)$ J/s

assuming specific heat of slurry to be 4184 J/kg C

Total heat loss $= Q = \sum_{i=1}^{6} q_i = 216.26 (T_S - T_A)$ J/s

Q is the upper bound for heat loss since the path of heat flux in the soil was taken vertically instead of being deflected sideways as shown in Fig. 2.2.2. This makes x smaller and subsequently U_i and q_i larger.

327

Calculation for the length of single-tube heat exchanger coil in digester

The dimensions of the tube are
Outer diameter : 0.035m
Inside diameter : 0.031m

Let $\dot{w}_w$ = water flow rate
L = length of coil
c_p = heat capacity for water = 4184 J/kg C
U = overall heat transfer coefficient
r_o = outer radius

Considering an infinetesimal section dx of the tube:
On the water side, $dQ = \dot{w}_w c_p dT_w$

For heat transfer, $dQ = - U 2\pi r_o (T_W - T_S) dx$

$$U 2\pi r_o (T_W - T_S) dx = \dot{w}_w c_p dT_w$$

Integrating:

$$\ln\left((T_{wi} - T_s)/(T_{wo} - T_s)\right) = U \cdot 2\pi r_o L / \dot{w}_w c_p$$

where T_{wi} and T_{wo} are the inlet and outlet temperature of water in the coil respectively.

If $\dot{w}_w$ = 1.2 l/min = 0.02 kg/s , T_i = 70°C from Fig. 3.3.2

Heat transferred from the water to the slurry,

$$Q_t = \dot{w}_w c_p (T_{wi} - T_{wo}) = 83.68 (70 - T_{wo})$$

From Appendix 5.1:

If T_A = 20°C, heat loss Q = 216.26 (T_S - 20) J/s
For $Q = Q_t$ and $T_{wo} > T_S$, T_s was found to be 24°C and T_{wo} to be 28.6°C.

Using these values in equation (1) and U_o = 170 W/m^2 C,

$$\text{Ln}\left(\frac{70-24}{28.6-24}\right) = 170\pi \times 0.035 \times L / 0.02 \times 4184$$

giving a value of L = 10.3m

The shape of a biogas plant, as well as the way in which it is built, determines its strength and whether it is able to stand up to the stresses placed upon it. In general, the circle is the shape in which stresses are most evenly distributed, so biogas plants are usually designed to be cylindrical or partly spherical in shape.

When a biogas plant is being designed and drawn up, the internal volumes of these shapes and the quantities of materials required to build them need to be calculated. The stresses on the different parts of the digester need to be assessed to ensure the design is strong enough. The equations given below should enable these calculations to be made for most designs of biogas plant.

7.1 Steel Drum Biogas Plant - Size and Shape

The simplest shape of biogas plant is that of the straight steel drum digester pit (Figure 7.1), It is a verical cylinder with internal diameter: D_1 , and external diameter: D_2 and height: H.

The internal volume (V_i) is then:

$$V_i = \frac{\pi}{4} . D_1^2 . H .$$

The volume of the brickwork (V_b) is given by:

$$V_b = \frac{\pi}{4} . (D_2^2 . t_f + (D_2^2 - D_1^2) . H),$$

where t_f is the thickness of the floor.

If the thickness of the walls is: t_w, the total area of the brickwork in the walls (A_b) is:

$$A_b = \pi . (D_1 + t_w) . H . \qquad V_b \text{ is then given by:}$$

$$V_b = A_b . t_w + \frac{\pi}{4} . (D_1 + 2 . t_w)^2 . t_f .$$

Table 7.1 gives the number of bricks and volume of mortar to be used for different brick walls, in terms of both brickwork volume and surface area.

The taper type of steel drum biogas plant has a slightly more complex

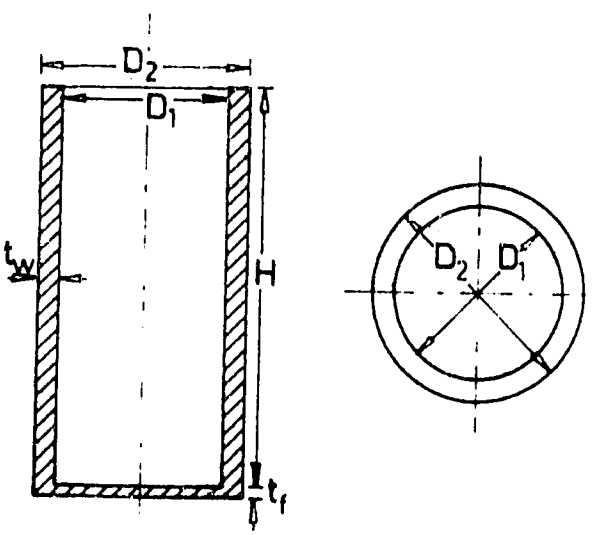

Figure 7.1 The Shape of a Straight Type Steel Drum Biogas Plant

329

Type of Wall (mm)	1 m^2 Area Contains:		1 m^3 Volume Contains:	
	Bricks	Mortar (l)	Bricks	Mortar (l)
Side Laid (70)	35	7	500	100
½ Brick (120)	60	18	500	150
1 Brick (240)	120	46	500	195
1½ Brick (360)	180	83	500	230
2 Brick (480)	240	110	500	230
Mass Brick	-	-	500	230

Table 7.1 Quantities of Bricks and Mortar in Brick Walls

shape (see Figure 7.2). It has two cyclindrical sections (ID: D_1 and D_3, OD: D_2 and D_4, heights: H_1 and H_3), connected by a truncated cone of height: H_2. The

The internal volume (V_i) is then:

$$V_i = \frac{\pi}{4}.(D_1^2.H_1 + D_3^2.H_3 + (D_1^2 + D_3^2 + D_1D_3).\frac{H_2}{3}) \quad .$$

The volume of the brickwork (V_b) is:

$$V_b = \frac{\pi}{4}.(D_4^2.t_f + (D_2^2 - D_1^2).H_1 + (D_4^2 - D_3^2).H_3 + (D_2^2 - D_1^2 + D_4^2 - D_3^2 + D_4D_2 - D_3D_1).\frac{H_2}{3}) \quad .$$

If the thickness of the walls is: t , the area of brickwork in the walls (A_b) is:

$$A_b = \pi.((D_1 + t).H_1 + (D_3 + t).H_3 + (D_1 + D_3 + 2t).\frac{H_2}{2}) \; ;$$

$$V_b = A_b.t + \frac{\pi}{4}.(D_3 + 2t)^2.t_f \quad .$$

Example 7.1

The volumes of the SD200 straight and taper plants can be found from their dimensions (see Volume I, Chapter 2).

SD200 Straight Plant (Volume I, Figure 2.4, Table 2.2)

D_1 (E) = 2 000; D_2 (H) = 2 480; H (A) = 4 630.

$V_i = \frac{\pi}{4} \times 2.0^2 \times 4.63 = 14.54 \; m^3.$ (π = 3.14159)

$V_b = \frac{\pi}{4} \times (2.48^2 \times 0.12 + (2.48^2 - 2.0^2) \times 4.63) = 8.40 \; m^3.$

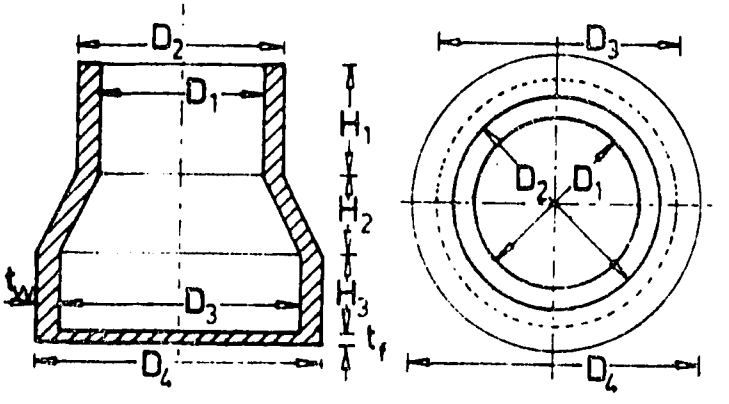

Figure 7.2 The Shape of a Taper Type Steel Drum Biogas Plant

Mortar Mix (1 lit)	Cement (kg)	Sand (lit)	Water (lit)
1:1	1.00	0.70	0.25
1:2	0.68	0.94	0.20
1:3	0.51	1.05	0.20
1:4	0.40	1.10	0.20
1:6	0.28	1.17	0.20
1:8	0.22	1.22	0.20

Table 7.2 Quantities of Cement, Sand and Water in 1 Litre of Mortar (CAI).

$A_b = \pi \times (2.0 + 0.24) \times 4.63 = 32.58\ m^2$, so:

$V_b = 32.58 \times 0.24 + \frac{\pi}{4} \times 2.48^2 \times 0.12 = 8.40\ m^3$.

SD200 Taper Plant (Volume I, Figure 2.3, Table 2.3)

D_1 (E) = 2 000; D_2 = 2 480; D_3 (G) = 2 900; D_4 (H) = 3 360;

H_1 (B) = 1 270; H_2 (C) = 910; H_3 (D) = 910; t = 240.

$V_1 = \frac{\pi}{4} \times (2.0^2 \times 1.27 + 2.9^2 \times 0.91 + (2.0^2 + 2.9^2 + 2.0 \times 2.9) \times 0.91/3)$

$= 14.34\ m^3$.

$V_b = \frac{\pi}{4} \times (3.36^2 \times 0.12 + (2.48^2 - 2.0^2) \times 1.27 + (3.36^2 - 2.9^2) \times 0.91$
$+ (2.48^2 - 2.0^2 + 3.36^2 - 2.9^2 + 3.36 \times 2.48 - 2.9 \times 2.0) \times 0.91/3$

$= 7.07\ m^3$.

$A_b = \pi \times (2.24 \times 1.27 + 3.14 \times 0.91 + (2.0 + 2.9 + 0.48) \times 0.91/2$

$= 25.60\ m^2$.

$V_b = 25.60 \times 0.24 + \frac{\pi}{4} \times 3.14^2 \times 0.12$

$= 7.07\ m^3$.

The volume of bricks and mortar required for the input pit, pipe supports and slurry outlet must be added to the above figures to obtain the total material quantities that are required to build this digester pit.

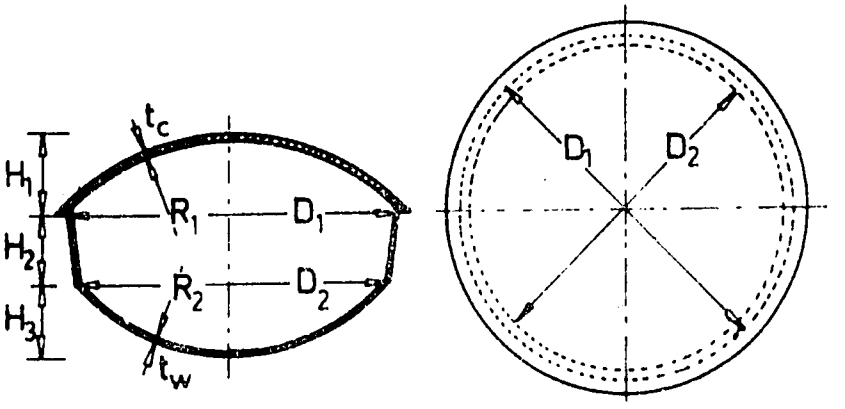

Figure 7.3 The Shape of a Concrete Dome Biogas Plant.

Concrete Mix (1 lit)	Cement (kg)	Sand (lit)	Aggreg.(l)	Water (l)
1:1:2	0.55	0.38	0.76	0.18
1:2:2	0.43	0.59	0.59	0.18
1:2:3	0.36	0.49	0.74	0.18
1:2:4	0.31	0.42	0.85	0.17
1:3:3	0.31	0.64	0.64	0.17
1:3:6	0.22	0.45	0.90	0.17
1:4:8	0.17	0.46	0.92	0.16

Table 7.3 Quantities of Cement, Sand, Aggregate and Water in 1 Litre of Concrete (CAI).

7.2 Concrete Dome Biogas Plant - Size and Shape

The digester pit of the concrete dome biogas plant (Volume I, Chapter 3) consists of two spherical segments, connected by a truncated cone (Figure 7.3). The top spherical segment, the "Dome", is the gas storage volume, so it is useful to deal with this seperately.

There are several parameters belonging to a circular or spherical segment that are related to each other (Figure 7.4): the radius of the arc (r), the width of the segment (d), the height of the segment (h) and the enclosed angle (2θ):

$$d = 2.r.\sin(\theta); \qquad h = r.(1 - \cos(\theta));$$

$$r^2 = (r - h)^2 + (\frac{d}{2})^2 \quad \text{or} \quad r = \frac{1}{2}.(h + \frac{d^2}{4h}) \text{ and } h = r - \sqrt{r^2 - \frac{d^2}{4}}.$$

If two of these parameters are known, the other two can be found.

The internal volume of the gas dome (G_i) of radius: R_1 and internal height ($H_1 - t_c$) is:

$$G_i = \frac{\pi}{3}.(H_1 - t_c)^2.(3.R_1 - (H_1 - t_c)).$$

H_1 is the external height and t_c is the thickness of the concrete.

The volume of concrete in the spherical part of the dome is the external volume less the internal volume:

$$G_c = \frac{\pi}{3}.(H_1^2.(3.(R_1 + t_c) - H_1) - (H_1 - t_c)^2.(3.R_1 - (H_1 - t_c))).$$

If the thickness of the concrete (t_c) is much less than the radius of the dome (R_1), then the above equation can be simplified:

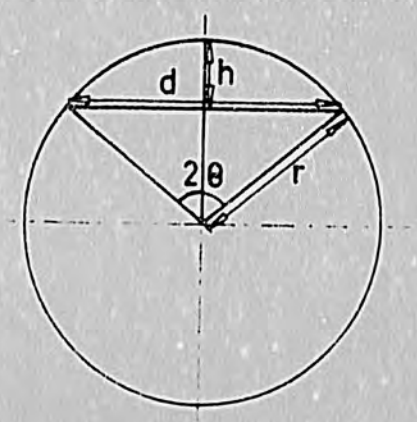

Figure 7.4 Parameters Belonging to a Spherical Segment.

332

$$G_c = 2.\pi.H_1.(R_1 + t_c).t_c \ .$$

These calculations do not allow for the extra thickening of the dome in the region of the collar. The volume of concrete in the collar (G_e) can be found by taking the area (A_e) of the extra thickness in one half of the cross section (the shaded area in Figure 7.5) and the radius of the centre of gravity (G) of this area (R_e):

$$G_e = 2.\pi.R_e.A_e \ .$$

For the DCS designs of dome plant, an approximation may be made by doubling the volume of concrete in the spherical part of the shell, to allow for this thickening.

The internal volume of the lower spherical segment can be found using the above formula, with the appropriate internal radius ($R_2 - t_w$) and height ($H_3 - t_w$, where t_w is the thickness of the cement plaster). The internal volume of the digester pit (V_i), without the gas storage dome is this volume, plus the volume of the truncated cone (IDs: $D_1 - t_w$ and $D_2 - t_w$ and height: H_2):

$$V_i = \frac{\pi}{3}.((H_3 - t_w)^2.(3(R_2 - t_w) - (H_3 - t_w) + ((D_1 - t_w)^2 + (D_2 - t_w)^2 + (D_1 - t_w)(D_2 - t_w)).\frac{1}{4}2).$$

Since the plaster layer over the inside of the digester pit is fairly thin,(30 mm), the volume of plaster (V_p) can be found by calculating the surface area of the digester pit (A_i) and multiplying by t_w:

$$A_i = \pi.(2.R_2.H_3 + \frac{(D_1 + D_2)}{2}\sqrt{H_2^2 + \frac{(D_1 - D_2)^2}{4}}) \quad \text{and:}$$

$$V_p = A_i.t_w \ .$$

The volume of plaster used to seal the dome (V_g) is:

$$V_g = 2.\pi.R_1.(H_1 - t_c).t_g \ ,$$

where t_g is the thickness of the plaster layer.

The total volume of the biogas plant (V_t) is then:

$$V_t = V_i + G_i \ .$$

The Working Volume of the plant is defined as:

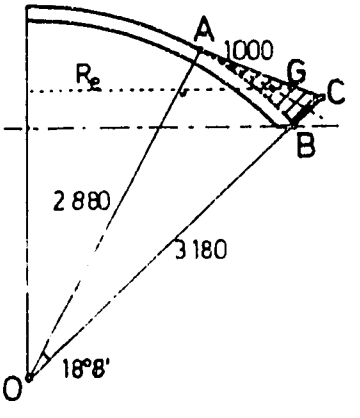

Figure 7.5 Volume of Concrete in Collar of Dome.

333

$$V_w = V_i + \frac{G_i}{2},$$

as the gas storage dome is not always full of slurry. In practice, the working volume depends on the cycle of gas production and usage. If more gas is stored for longer in the gas storage dome, the working volume is reduced.

Example 7.2

The volume of the CP20 biogas plant can be found from its dimensions (Volume II, Figure 3.2, Table 3.2):

$H_1 = 920$; $D_1 = 4\,000$; $R_1 = 2\,800$; $t_c = 80$; $H_2 = 785$;
$H_3 = 875$; $D_2 = 3\,800$; $R_2 = 2\,500$; $t_w = 30$.

$$G_i = \frac{\pi}{3} \times 0.84^2 \times (3 \times 2.8 - 0.84)$$
$$= 5.586 \text{ m}^3 .$$

$$V_i = \frac{\pi}{3} \times (0.845^2 \times (3 \times 2.47 - 0.845) + (3.97^2 + 3.77^2 + 3.97 \times 3.77) \times \frac{0.785}{4})$$
$$= 14.145 \text{ m}^3.$$

$$V_t = 14.145 + 5.586 = 19.731 \text{ m}^3 \quad (\text{ie. } 20 \text{ m}^3).$$
$$V_w = 14.145 + 5.586/2 = 16.938 \text{ m}^3.$$

The materials quantities are given by:

$$G_c = 2\pi \times 0.92 \times 2.88 \times 0.08$$
$$= 1.332 \text{ m}^2 .$$

The total volume of concrete in the dome is then $2 \times G_c$:

$$= 2.664 \text{ m}^3 \ (\text{ie. } 2.7 \text{ m}^3).$$

The area of plaster in the digester pit is:

$$A_i = \pi \times (2 \times 2.5 \times 0.875 + 3.9 \times \sqrt{0.616 + 0.01})$$
$$= 23.440 \text{ m}^2 .$$

So the volume of plaster is:

$$V_p = 23.440 \times 0.030 = 0.703 \text{ m}^3.$$

The volume of plaster (with acrylic emulsion) to seal the dome is:

$$V_g = 2\pi \times 2.8 \times 0.84 \times 0.011 = 0.162 \text{ m}^3,$$

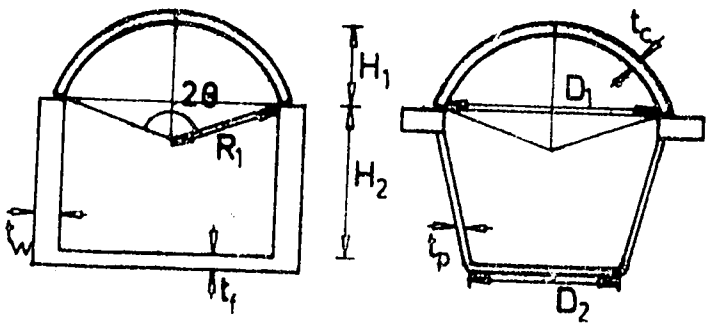

Figure 7.6 The Shape of a Tunnel Biogas Plant.

(ie. 0.12 m^3 of 1:2 plaster with 2% paint + 0.04 m^3 cement with 4% paint).

The volume of cement in the collar can be found more accurately by calculating the area of shape! ABC in Figure 7.5:

$$\text{Area of Triangle: AOC} = \sqrt{S.(S - OA).(S - OC).(S - AC)}$$
$$= \sqrt{3.53 \times 0.65 \times 0.35 \times 2.53}$$
$$= 1.425 \ m^2,$$

where $S = \frac{1}{2}.(OA + OC + AC)$, the half-perimeter.

The angle: $A\hat{O}C$ is given by: Area $= \frac{1}{2}.\ OA \times OC \times \sin(A\hat{O}C)$, so:

$$A\hat{O}C = \sin^{-1}\left(\frac{2 \times 1.425}{2.88 \times 3.19}\right) = 18^{\circ}\ 8'.$$

$$\text{Area of Segment AOB} = \frac{1}{2} \times OA^2 \times AOC \text{ (rads)} = \frac{1}{2} \times 2.88^2 \times \frac{18^{\circ}\ 8'}{180} \times \pi$$
$$= 1.312 \ m^2$$

Area of ABC = 1.425 - 1.312 = 0.113 m^2.

The centre of gravity (G) lies $\frac{2}{3}$ of the distance between the top of shape, point: A and the mid- mid-point of the base, line: BC. The radius of this point from the vertical axis of the spherical segment, line: OP is: 1.945 m, so:

$$G_e = 2\pi \times 1.945 \times 0.113 = 1.381 \ m^3.$$

The total volume of concrete in the roof of the plant is then:

$$G_t = 1.332 + 1.381 = 2.713 \ m^3 .$$

7.3 Tunnel Biogas Plant - Size and Shape

The gas storage volume of a tunnel biogas plant is a segment of a cylinder lying horizontally (Figure 7.6). The internal volume of this tunnel is found by multiplying the cross-sectional area (A_g) by the length (L).

$$A_g = \frac{1}{2}.R_1^2.(2\theta - \sin 2\theta),$$

where: 2θ is the angle, in radians, subtended by the circular arc, radius: R_1 , at its centre.

$$G_i = A_g.L .$$

The concrete in one roof piece (g_c), which covers one half of the width of the tunnel and is of length: l is:

$$g_c = \frac{1}{2}.((R_1 + t_c)^2 - R_1^2).\theta.l .$$

The extra thickness at the edges can be allowed for, by adding 12% onto this figure. The total volume of concrete in the roof (G_c) is:

$$G_c = 1.12 \times 2 \times g_c \times \frac{L}{l} .$$

There are two types of digester pit, or trench (Volume I, Chapter 4), lined with either brick masonry or cement plaster. The internal volume of the brick-lined trench (V_i) is:

$$V_i = D_2.H_2.L ,$$

where: D_2 and H_2 are the widths and height of the trench.

The volume of the brick walls (V_b) is:

$$V_b = (2.H_2.t_w + (D_2 + 2.t_w).t_f).L ,$$

where: t_w and t_f are the thickness of the walls and floor.

If the outlet pit and the end walls are included:

$$V_b = (2.H_2.t_w + (D_2 + 2.t_w).t_f).B + (H_1 + H_2 + t_f).(D_2 + 2.t_w).2t_w$$

where: B is the total length of the brick trough.

The internal volume of the cement lined trench (V_i), which has a trapezoidal section, is:

$$V_i = \frac{1}{2}.(H_2 - t_p).(D_1 + D_2).L \;;$$

and the volume of the cement plaster:

$$V_p = (D_2 + 2.t_p + 2.\sqrt{\left(\frac{D_1 + D_2}{4}\right)^2 + (H_2 + t_p)^2}\,).L.t_p \quad .$$

If the outlet pit and the plaster on the end walls are included:

$$V_p = (D_2 + 2.t_p + 2.\sqrt{\left(\frac{D_1 + D_2}{4}\right)^2 + (H_2 + t_p)^2}\,).B.t_p + 2.\frac{1}{2}.(H_1 + H_2).(D_1 + D_2).t_p \quad .$$

Example 7.3

The Volume of the TP10 biogas plant can be found from its dimensions (Volume I, Figures 4.1 and 4.2, Table 4.2):

R_1 = 600; D_1 = 1 130; H_1 = 400; L (A) = 9 000; t_c = 40;
B = 9 600.

For the brick lined trench: t_w = 120; $D_2 = D_1$; H_2 = 800; t_f = 70.
For the plaster lined trench: t_p = 30; D_2 = 800; H_2 = 800.

From the geometry of a circular segment (see above and Figure 7.4):

$$\theta = \cos^{-1}(1 - \frac{H_1}{R_1}) = \cos^{-1}(1 - \frac{0.4}{0.6}) = 70^\circ\ 31' = 1.231 \text{ rads.}$$

$$G_i = \frac{1}{2} \times 0.6^2 \times (2 \times 1.231 - \sin 2.462) \times 9.0$$
$$= 2.970 \text{ m}^3 \quad .$$

$$G_c = \frac{1}{2} \times (0.64^2 - 0.6^2) \times 1.231 \times 0.5$$
$$= 0.0153 \text{ m}^3 \text{ or } 0.0171 \text{ m}^3 \text{, if allowance is made for the ends.}$$

$$G_c = 0.0171 \times 2 \times \frac{9.0}{0.5}$$
$$= 0.616 \text{ m}^3.$$

For the brick lined trench:

$$V_i = 1.13 \times 0.8 \times 9.0$$
$$= 8.136 \text{ m}^3,$$

and the total volume of brickwork in the trench is:

$$V_b = (2 \times 0.8 \times 0.12 + 1.37 \times 0.07) \times 9.6 + 2 \times 1.27 \times 1.37 \times 0.12$$
$$= 3.181 \text{ m}^3 \quad .$$

Extra bricks are used to hold the tunnel covers in place, as well as for the inlet pit and reservoir. Extra concrete is used for both the curved and flat covers for the reservoir.

For the cement plaster lined trench:

$$V_i = \frac{1}{2} \times 0.8 \times (1.13 + 0.8) \times 9.0$$
$$= 6.948 \text{ m}^3 \;;$$

and the total volume of cement plaster is:

$$V_p = (0.86 + 2 \times \sqrt{\frac{3.725}{4} + 0.689}) \times 9.6 \times 0.03 + 1.2 \times 1.93 \times 0.03$$
$$= 1.050 \text{ m}^3 .$$

Again, allowance must also be made for the bricks used in this design, as well as the extra concrete for the reservoir covers.

The total internal volume for the two types of tunnel plant are:

$V_t = 8.136 + 2.970 = 11.106 \text{ m}^3$ for the brick lined trench, and

$V_t = 6.948 + 2.970 = 9.918 \text{ m}^3$ for the plaster lined trench.

The working volume is defined as:

$V_w = 8.136 + 2.970/2 = 9.621 \text{ m}^3$ for the brick lined trench, and

$V_w = 6.948 + 2.970/2 = 8.433 \text{ m}^3$ for the plaster lined trench.

7.4 Inlet Pits and Reservoirs

Most of the inlet pits and slurry reservoirs used in these designs of biogas plant are of rectangular shape, so the internal volume (V_r) is:

$$V_r = S_1 . S_2 . G_1 ,$$

where: S_1 and S_2 are the length and breadth of the pit and G_1 is the depth of slurry in the pit.

The volume of brickwork in the walls (V_b) around a rectangular pit is:

$$V_b = 2.(S_1 + S_2 + 2.t_w).G_2.t_w ,$$

where t_w is the thickness of the walls and G_2 the height.

Most other shapes in a biogas plant can be broken into rectangular or triangular areas, to allow these volumes to be calculated.

7.5 Stresses on a Biogas Plant

The lining of a digester pit is not designed to take much stress; its main function is to act as a barrier to stop the slurry leaking from the pit. For brick lined digesters, careful backfilling of the spaces between the brick walls and the uncut earth ensures that the hydraulic pressures from the mass of slurry in the pit are absorbed by the mass of earth around the walls. A brick wall can withstand very little tension stress. The main stress on this brick wall, then, is the weight of the rest of the wall above.

The plaster lining used in the dome and in one type of tunnel plant, is also only a barrier and cannot take any stress. It must be applied to smooth, undisturbed earth, which must resist the pressures on the cement.

The part of a biogas plant that does have to withstand stress is the concrete roof of a dome type plant and the arched roof of a tunnel plant. These must be designed so that all the stress comes in compression, which concrete, and also brick masonry, can withstand.

If the thickness of a circular concrete shell is small compared with the radius of the circle, and the shell is uniformly loaded, the strains within the concrete can be ignored, and the shell treated as if it were a membrane. As the roof of a dome or tunnel plant is almost 1 metre underground, the layer of earth above it should spread any live load above it (eg. a buffalo standing on top) uniformly over the whole area of the roof. The analysis below is not valid for point or non-uniform loads.

7.6 Stress Analysis for an Arch

Taking a section of circular arch (7.7), subtending an angle: 2ϕ at the

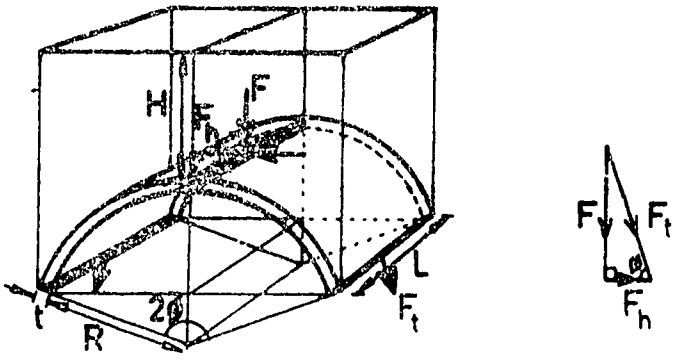

Figure 7.7 Forces Acting on a Cylindrical Arch.

centre, the membrane theory can be applied if the thickness (t) is much less than the radius (R) of the arc, so that higher terms of t (t^2) can be ignored.

The stresses on a length: L of this arch are caused by the weight of the arch itself (M_s), the weight of the earth on top of it (M_w) and any live load on top of that (M_l). The mass of earth of depth: H above the centre of the arch is:

$$M_w = (2.(H + (R + t).(1 - \cos\phi)).(R + t).\sin\phi - \frac{1}{2}.(R + t)^2.(2\phi - \sin 2\phi)).\rho_e.L$$
$$= (2.(H + R + t).\sin\phi - \frac{1}{2}.(R + t).(\sin 2\phi + 2\phi)).\rho_e.L.(R + t) ,$$

being a rectangular solid less the volume enclosed by the outside of the arch.

The mass of concrete in the arch is:

$$M_s = \rho_c.(R + t).\phi.t.L \quad .$$

The total mass on top of the arch (M) is then:

$$M = M_w + M_s + M_l \quad .$$

The force (F = M.g) due to this mass, can be resolved into horizontal (F_h) and tangential (F_t) components at each edge of the section:

$$F_h = \frac{F}{\tan\phi} ; \qquad F_t = \frac{F}{\sin\phi} \quad .$$

The horizontal force (F_h) effectively acts as a force "pushing" the two halves of the arch together and is resisted by a strain in the top of the arch (f_h):

$$f_h = \frac{F_h}{L.t} \quad .$$

The tangential force (F_t) acts outwards from the edges of the section, over the area of the concrete at the edges, producing a strain (f_t) in each edge:

$$f_t = \frac{F_t}{2.L.t} \quad .$$

Taking all these equations together:

$$f_h = \frac{((2.\rho_e.(H + R + t).\sin\phi - \frac{1}{2}\rho_e.(R + t)(\sin 2\phi + 2\phi) + \phi.t.\rho_c)}{L.t.\tan\phi} \times \frac{(R + t).L + M_l).g}{}$$

$$f_t = \frac{((2.\rho_e.(H + R + t).\sin\phi - \tfrac{1}{2}\rho_e.(R + t)(\sin 2\phi + 2\phi) + \phi.t.\rho_c)}{2.L.t.\sin\phi} \times \frac{(R + t).L + M_1).g}{}$$

These strains are essentially independant of length (taking the live load as per unit length), so the tunnel plant can be built to any length, without causing any structural problems.

Example 7.4

The stresses on the arched roof of a tunnel plant can be found from its dimensions (see Example 7.3 above):

$R\ (R_1) = 600$; $t = 40$; $H = 900$; $\phi = 70^\circ\ 31' = 1.231$ rads.

The density of earth (ρ_e) is: 1.8×10^{-6} kg/mm^3;

the density of concrete (ρ_c) is: 2.2×10^{-6} kg/mm^3;

The acceleration due to gravity (g) is: 9.81 m/sec^2.

Ignoring the live load, the force downwards on 1 metre section of tunnel is:

$$F = ((2 \times 1540 \times \sin 1.231 - \tfrac{1}{2} \times 640 \times (\sin 2.462 + 2.462)) \times 1.8 \times 10^{-6} + 1.231 \times 40 \times 2.2 \times 10^{-6}) \times 640 \times 1000 \times 9.81$$

$$= 22{,}317 \text{ N/ metre length.}$$

So: $f_h = \dfrac{22{,}317}{1000 \times 40 \times \tan 1.231} = 0.197$ N/mm^2 or MPascals, and:

$f_t = \dfrac{22{,}317}{2 \times 1000 \times 40 \times \sin 1.231} = 0.296$ N/mm^2 or MPa.

If the values of the horizontal and tangential strains are checked over the range of angles from 0 to 70°, it is found that the horizontal strain reaches a maximum of 0.516 N/mm^2, at small angles. The tangential strain is maximum at the above point, where $\phi = 70^\circ\ 31'$. The value for both strains is always positive, over this range of angles, indicating that the strains are always compressive.

Placing a live load of 700 kg, spread over 2 m of length (simulating a large buffalo standing on top):

$F = 22{,}317 + \dfrac{700}{2} \times 9.81 = 25{,}751$ N/ metre length and:

$f_h = 0.228$ N/mm^2 and: $f_t = 0.342$ N/mm^2.

Even putting a 1.5 tonne tractor on top, straddling 2.5 m of plant:

$F = 28{,}203$ N/m; $f_h = 0.249$ N/mm^2; $f_t = 0.374$ N/mm^2.

Since the compressive strength of concrete should be at least 10 N/mm^2, (CAI) the concrete roof pieces of a tunnel plant are easily strong enough to withstand this level of uniform loading. In practice, the roof pieces are far more likely to be broken while being transported or put in place, by sudden non-uniform loads, such as being dropped on one corner.

7.7 Stress Analysis for a Dome

A section of spherical shell (Figure 7.9) which subtends an angle: 2ϕ at the centre, can be analysed by the membrane theory if the thickness of the shell (t) is much less than the radius (R) of the sphere.

The mass of earth (M_w) of depth: H at the centre, on top of the dome segment, is found by taking a cylinder, of depth: $H + H_1$ and subtracting the volume enclosed by the outside of the sphere : $(V = \pi.H_1^2.(R - \frac{H}{3}1))$

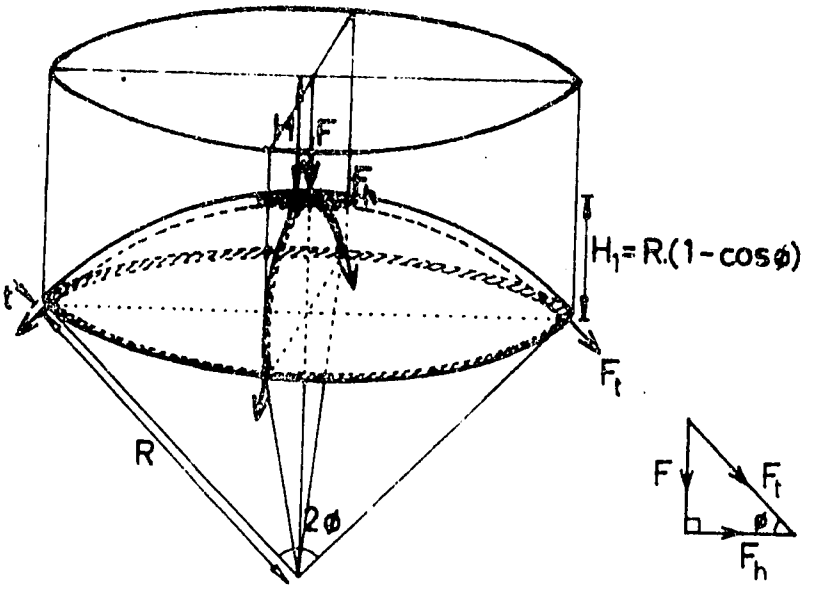

Figure 7.8 Forces Acting on a Dome Segment.

$$M_w = \rho_e.\pi.((R + t)^2.\sin^2\phi.(H + (R + t)(1 - \cos\phi)) - (R + t)^3((1 - \cos\phi)^2 - \tfrac{1}{3}.(1 - \cos\phi)^3))$$

$$= \rho_e.\pi.(R + t)^2.((H + R + t).\sin^2\phi - (R + t).(\tfrac{2}{3} - \cos\phi(1 - \sin^2\phi) + \tfrac{1}{3}.\cos^3\phi)) .$$

$$= \rho_e.\pi.(R + t)^2.((H + R + t).\sin^2\phi + \tfrac{2}{3}.(R + t).(\cos^3\phi - 1)) .$$

The mass of the shell itself (M_s) is:

$$M_s = \tfrac{2}{3}.\rho_c.\pi.((R + t)^3 - R^3).(1 - \cos\phi) \qquad (V = \tfrac{2}{3}.\pi.R^2.H_1)$$

$$= 2.\rho_c.\pi.R.t.(R + t).(1 - \cos\phi) \qquad \text{(ignoring terms in } t^3\text{)}.$$

The force on the spherical shell is then:

$F = (M_w + M_s + M_1).g$ and the horizontal and vertical components are:

$$F_h = \frac{F}{\tan\phi} \qquad \text{and:} \qquad F_t = \frac{F}{\sin\phi} .$$

The horizontal force acts over an arch of the shell, of area:

$A_h = 2.t.(R + t).\phi$, so:

$$f_h = \frac{F_h}{2.t.(R + t).\phi} .$$

The tangential force acts over the area (A_t) at the edge of the dome:

$A_t = 2.\pi.(R + t).t.\sin\phi$, so: $f_t = \dfrac{F_t}{2.\pi.t.(R + t).\sin\phi}$

Taking all these equations together:

340

$$f_h = \frac{\pi.(\rho_e.\frac{1}{2}.(R + t).((H + R + t).\sin^2\phi + \frac{1}{3}.(R + t)(\cos^3\phi - 1)) + \rho_c.R.t.(1 - \cos\phi)).g}{t.\phi.\tan\phi}$$

$$f_t = \frac{(\rho_e.\frac{1}{2}.(R + t)((H + R + t)\sin^2\phi + \frac{1}{3}.(R + t)(\cos^3\phi - 1)) + \rho_c.R.t.(1 - \cos\phi)}{t.\sin^2\phi}$$

Example 7.5

The stresses on the dome of a CP20 biogas plant can be found from its dimensions (see Example 7.2 above):

$R\ (R_1) = 2\ 800;\quad H = 800;\quad t = 80;\quad D_1 = 4\ 000;$

$\phi = \sin^{-1}(\frac{D_1}{2R_1}) = \sin^{-1}(\frac{4.0}{2 \times 2.8}) = 45^\circ\ 35' = 0.796$ rads.

Ignoring live loads, the force downwards on the whole of the dome is:

$$F = 2.\pi.\times 9.81 \times 2880 \times((\frac{2880}{2} \times 3860 \times (\sin 0.796)^2 + \frac{1}{3} \times 2880^2 \times ((\cos 0.796)^3 - 1)) \times 1.8 \times 10^{-6} + 2800 \times 80 \times (1 - \cos 0.796) \times 2.2 \times 10^{-6})$$

$= 352,174$ N.

$$f_n = \frac{352,174}{2 \times 80 \times 2880 \times 0.796 \times \tan 0.796} = 0.940\ N/mm^2 \text{ or MPa.}$$

$$f_t = \frac{352,174}{2\pi \times 2880 \times 80 \times (\sin 0.796)^2} = 0.476\ N/mm^2 \text{ or MPa.}$$

If the values of the horizontal and tangential strains are checked over the range of angles from 0° to 45°, it is found that the horizontal strain is maximum at 20°, being: 1.070 N/mm^2. The tangential strain is maximum at the above position, ie. $45^\circ\ 35'$. Both strains are always positive, over the above range of angles, so the strain is always compressive.

Putting a 1.5 tonne tractor on top of the dome:

$F = 352,174 + 1,500 \times 9.81 = 366,889$ N and:

$f_n = 0.979\ N/mm^2$ and: $f_t = 0.511\ N/mm^2$.

Again, since the compressive strength of concrete should be at least 10 N/mm^2, the dome of a CP20 biogas plant is easily strong enough to take even a tractor standing on top of it, as long as the load is uniformly spread over the dome by the layer of earth above it.

The tangential component of the weight of the dome is taken by the soil on which it rests. The weight of the dome is higher than calculated above, as the edge is thickened, giving:

$F = 357,593$ N.

However, the area on which the dome rests (A_t) is then:

$A_t = 2.\pi \times 2990 \times (300 + 100 \times \sin 0.796) \times \sin 0.796$

$= 4,986,545\ mm^2$

$$f_t = \frac{357,593}{4,986,545 \times \sin 0.796} = 0.100\ N/mm^2.$$

A medium quality soil has a bearing capacity of 0.12 N/mm^2 (Khanna), so would be strong enough to support the dome. A poorer soil, such as soft clay or sand, may not be able to support this load, so the dome might settle into the ground, or even crack due to non-uniform loads.

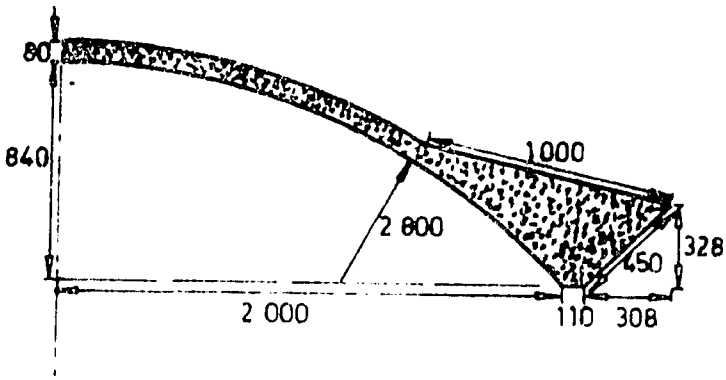

Figure 7.9 Alternative Design of Collar for Use with Poor Soils.

The use of brick pillars is one way to support the dome (see Volume I, Chapter 3); the area under the base of the pillars should be at least 6 sq.m. A better way would be to redesign the collar of the dome for use with poor soils. If the thickness of the edge of the dome is made to be 450 mm (Figure 7.9), the compression of the soil is reduced to 0.067 N/mm^2, which is within the bearing capacity of even a poor soil (Khanna). The volume of this collar is 2.116 m^3, giving a total volume for the whole top of 3.448 m^3.

342

Chapter 8. DEVELOPMENT OF COMMUNITY BIOGAS IN NEPAL

D. Fulford

The concept of community biogas technology is based on three basic assumptions, which make up the "community biogas equation". If these assumptions are valid, they offer a way in which the restraints of biogas technology, particularly the relative high capital cost, can be overcome. This would allow poorer sections of the community to benefit from this technology.

The assumptions are:

Scale: if a large scale biogas plant is built, the effective cost per cu.m of biogas produced is lower. A community of people can share their supplies of feedstocks and other inputs.

Economic: a larger biogas plant produces more biogas, which may be used for purposes that generate income. If a biogas plant can earn enough cash so that the origional investment (as a loan) can be recovered in a short enough time, lack of money is not a restraint.

Socioloical: if a biogas plant is placed in the social context of a primary group, it will evoke the same set of reactions as in the context of one owner/user. A primary group is characterised as having 'face to face' relationships, sharing close physical proximity and having a common identity (Cooley), so they should have a common set of responsibilities as well.

These assumptions need to be tested in a real environment. This was done by looking at previous attempts to set up community biogas plants in Nepal, as well as setting up our own project.

8.1 A Survey of Previous Attempts

There was one programme in Nepal in 1979, sponsored by His Majesty's Government of Nepal and United States AID, that planned to build 4 community biogas plants, one in each of the Development Regions of that time. Three community plants were completed (Karki). The plants drew on a wide range of possible uses of biogas technology in a number of different social settings (Bulmer).

Plant number: 1 was sited in a settled village environment, with cow dung as the feedstock, and the biogas used for cooking and lighting by 5 Hindu housenolds.

Plant number: 2 was sited in a resettlement camp for 26 Buddhist families, to provide lighting for the work of carpet making. Both cow dung and human excreta were used as feedstocks.

Plant number: 3 was sited in an urban setting to provide gas for cooking for 10 low-caste Hindu households. The main purpose of the plant was to take human excreta from latrines, that were to serve as a hygenic measure for about 300 low-caste women.

One year after these plants had been completed, none were working as planned:

Plant number 1 was only being used by 3 of the 5 families. Only one family really took interest in the plant, although they complained that the biogas appliances and the plant itself were in need of repair. They did not know who to approach about maintenance.

Plant number 2 was being used by 5 of the 26 families. Gas was insufficient for all the lights; probably because of pipe leakages. The latrines were still being used.

Plant number 3 had been abandoned. There were several problems of a technical, social and administrative nature that proved too complex to solve. The biogas produced would not burn; the latrine attendant (a man)

was not being paid (from the sale of biogas); the initial popularity of the latrines faded as the system became overloaded and began to smell.

The main causes of failure in these projects were identified as being in the approach used by the implementing organisations to the communities. Many problems related to the social organisation of these communities only came to light after the biogas plants were built. Data must be collected about the community in which a biogas project is to be built, before any technical work is started.

Priority was given to the building of the biogas plant, although the real needs and priorities of the people may have been entirely different. The real needs of a community must be assessed objectively, and if biogas technology cannot offer an answer to those needs, then a plant should not be built there.

People in these communities could not work together as well as they thought they could. Methods should be devised to assess people's ability to work together as a community, before they are committed to such a relatively expensive project as a biogas plant.

These biogas plants were built for the communities, paid for by the aid agency. The people expected the aid agency to repair the plants when they went wrong and had little commitment to ensure they were kept working. If people make a financial commitment, themselves, to a project, they are far more likely to keep it going.

While the biogas plants were in some way related to income earning, such as giving lighting for carpet making, the uses for the biogas did not earn an income directly. If biogas is used directly to earn money, then people have a high incentive to continue to use it.

The implementing organisation left the projects, once the biogas plants were built. The responsibility for such a community project does not end there; careful follow-up, training and maintenance are required to ensure such a project continues working.

8.2 Another Approach

Three independent institutions were involved in the second community biogas programme in Nepal, each taking on a particular responsibility.

The Small Farmers' Development Programme works under the Agricultural Development Bank of Nepal, with the guidence of the Freedom from Hunger Campaign of the Food and Agricultural Organisation (RAFE). They help to organise poor farmers into groups that are then able to borrow money for development projects. The Nepal SFDP also provides expert help for some of these projects, such as pumped irrigation and improved livestock breeding. The ADB/N provides loans for such projects at 11% interest over 7 years. They also had a fund from United Nations Development Programme to pay 50% subsidies for the setting up of community biogas plants.

The Gobar Gas tatha Krishi Yantra Bikash (Pvt) Ltd was set up to build biogas plants in Nepal (see Volume I, Chapter 13). They offer training in biogas technology for farmers and give a 7 year guarantee for any plant they build. They have a network of sales and service depots in many parts of Nepal, and make yearly follow-up visits to customers, as part of the guarantee, to do minor maintenance.

Development and Consulting Services has been continuing a research and development programme on biogas (see Chapter 2). They were able to offer expert technical help, as well as feasibility analysis of the programme.

Year	No. Households	Village	District	Machines:		
				Huller	Grinder	Pump
1981	4	Tiklegard	Rupendehi	1	1	
1982	22	Chokatey	Gorkha	1	1	
1982	4	Bhutaha	Nawal Parasi	1	1	
1982	5	Laxmipur	Dang	1	1	
1982	10	Pokodyia	Dhanusa	1	1	
1983	4	Birendra-nagar	Chitwan	1	1	
1983	12	Madhi	Chitwan	1	1	
1983	5	Dulari	Itahari	1	1	
1983	37	Madhubasa	Dhanusa			1

Table 8.1 Community Biogas Plants Built by Gobar Gas Company.

The Small Farmers' Development Programme had gained valuable experience with working with small groups of farmers (4 to 20 households), so the first "community" biogas plant was built for such a group. Four families, who lived near to each other, agreed to purchase an SD500 biogas plant by taking out a cooperative loan from ADB/N (which requires less security than an individual loan). SFDP were also able to find a 50% subsidy for the biogas plant. Initially the biogas was to be used for only cooking and lighting, but concerns about finding enough money to pay back the loan encouraged the four families to test the use of an engine driving a rice huller (see Case Study 8.1, following).

Since this first "group" biogas plant was built, others have followed (see Table 8.1), about 7 in all. About 7 more have been ordered and are being built. The growth of interest in group ownership of biogas plants has coincided with a growth in interest in the use of biogas to run engines to drive grain mills. At least 6 individually owned SD500 biogas plants have also been purchased in the same period (4 years), to run engines, and more have been ordered.

The "group" type of community biogas plant should be distinguished from the "village" biogas plant, in which larger numbers of people are involved. Only one village biogas system has been set up, at the time of writing, to drive an irrigation pump (see Case Study 8.2, following).

The difference between a group biogas plant and a village one is not always clear. The plant at Chokatey (see Table 8.1) is counted as a group plant, even though 22 families are involved. A group is a collection of people who have come together to form a cooperative, so they can take part in a development project, usually with the help of the SFDP in Nepal. A group of 22 families is near the maximum size. The village of Chokatey were helped by the Resource Conservation and Utilization Project of USAID. A group is self-selecting: people only join it if they wish, and people can leave it at any time, as long as they have fulfilled their commitments to the group.

A village biogas plant includes everyone in a natural community, who normally live and work closely together. A village grouping tends to include a larger number of families (over 20) and may include people who are less inclined to cooperative ventures, or who have little interest in the project (Roy). Since tensions and divisions are far more likely in a village, than in a group, a village biogas project is much more difficult to start.

Case Study 8.1: Group Ownership of a Biogas Plant.

Village	: Kusongodai	Kusongodai lies 5 km South-West of Balawadi, which is on the Butwal-Bhairahawa road.
Panchayat	: Tiklegard	
Ward No.	: 7	
District	: Rupendehi	
Zone	: Lumbini	Plant used for cooking/lighting/milling.

In 1980, the Small Farmers' Development Programme manager (the Group Organiser/Action Research Fellow) suggested to SFD Group Number 36 that they set up a community biogas plant. They were having problems with obtaining fuel in the local area and had seen an individually owned biogas plant nearby and were interested by it. The SFDP GO/ARF asked DCS to make a survey of the village (Bulmer).

5 of the houses in the village of Kusongodai were very close together, so the piping of biogas to these houses would be easy. 2 other houses were fairly close. All the people living in the village (10 families) were Brahmins and related to one another. They traditionally worked together in their farming activities and had been involved in the Small Farmers' Development Group. In 1980, they were spending about Rs.1,500 per household on wood and kerosene for cooking and lighting. These prices were increasing, and would have doubled by 1990. 4 of these families had approximately equal landholdings and livestock.

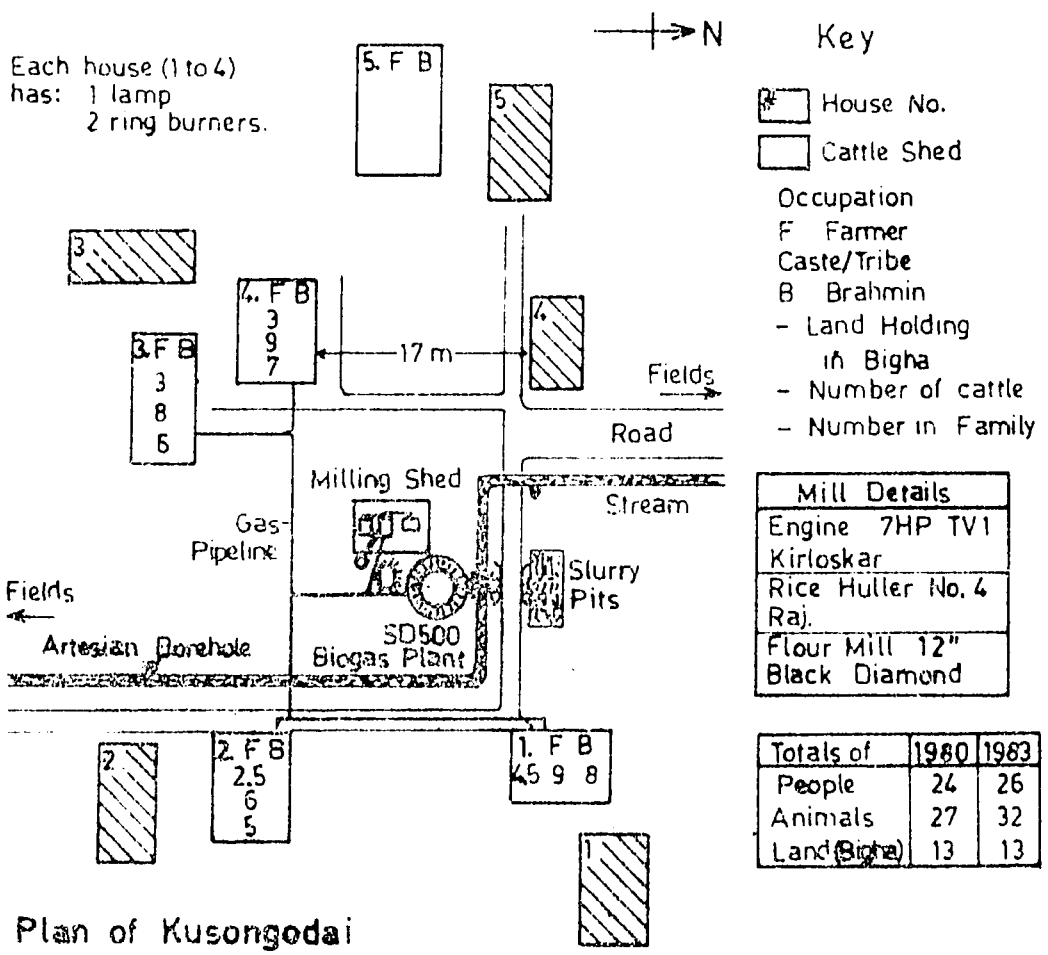

Figure 8.1 Small Farmers' Development Group No. 36, Tiklegard.

246

Factors against the success of a group plant were the total number of cattle (27), which was too low for feeding an SD500 biogas plant; and the opposition of one family head (no. 5), who was a respected elderly priest, who had influence in the village.

The biogas plant was built in April 1981, for four families of SFDG No. 36, providing 2 ring burners and 1 biogas lamp for each of the 4 houses (see Figure 8.1). In February 1982, the Gobar Gas Company persuaded these families to install a 5 HP Kirloskar dual-fuel engine and a rice-huller for a 6-month trial period. In August 1982, the engine was taken back by the Gobar Gas Company, and the villagers bought a 7 HP dual-fuel engine and a flour grinder with a loan from ADB/N, through the SFDP. They later purchased the rice huller from DCS.

Allocation of Responsibilities

The villagers have carefully organised themselves to ensure that the biogas system works well. Each house brings 3 buckets of cattle dung to feed the biogas plant each morning, and a person from the house helps to mix the slurry. The four house heads have agreed to open the main gas valve at fixed times, so the gas can be used for cooking: 5.00 to 5.50 am for early morning tea; 6.00 to 8.30 am for the main meal; 1.30 to 2.00 pm for afternoon tea; 6.30 to 9.00 pm for the evening meal and for running the gas lamps. The 4 households take it in turn to be responsible for the oversight of the main gas valve for 10 days at a time.

The mill is used for as long as there is demand for its services. In the winter months, when there is less gas, the houses have to use wood to cook the evening meal. Outside customers tend to come to the village to have their rice hulled or grain ground towards late morning. If the gas has all been used, they will run the engine on diesel alone.

The effluent slurry is collected in pits at the edge of the village. Each household has its own storage pit and takes slurry from the central pit whenever they need it. They must count the number of buckets of slurry that they take and make sure that each house has the same amount.

The mill is operated by two people: the driver, who is hired from outside the village and a cashier, who is one of the people from the 4 households. The driver arrives for work at 7.00 am and is given an hour off for his mid-day and evening meals. He is paid Rs.300 a month, however much work he does. In the slack seasons (eg. the monsoon) he may only work for 3 hours a day. In the harvest months, he may have to work for 18 hours/day; sometimes all night long. He often collects diesel (20 litres a time) using a bicycle for the 7 km journey. He also does any maintenance and repair work required on the mill.

The cashier issues slips of paper to the people waiting to have their grain processed in the mill. The slips have numbers on, to save arguments about who came first, and they also show how much grain is being milled and how much must be paid, in money or in grain. Duplicates of these slips are retained by the cashier for accounting purposes. The job of cashier is taken by each household in turn.

The cashier writes a record of the daily income in a register in house no. 4, in the presence of the head of the house. He then takes the grain and money to house no. 2, where it is again recorded and put away for safe-keeping. The head of house no. 2 also keeps a monthly register to record repayments to the bank for the loan. He also sells grain from the stock earned from milling to people who come to buy it. Another person from another house must be present, when grain is sold.

The work of maintaining the engine, mill and biogas plant is done by the driver, with the help of the young men of the village. Many visits have been made to the site by the Gobar Gas Company technical staff and the villagers are satisfied with this service.

Effectiveness of a Group Biogas System

The villagers are very satisfied with the dual role of their biogas plant, providing fuel for cooking and lighting, as well as running a small mill that provides them with an income. They are pleased that the money earned by the mill is enough to finance the cost of the loan repayments, so they do not have to find that money elsewhere. The close cooperation between the 4 households is motivated by the benefits that they see coming from effective operation of their biogas system.

It has not been possible to give exact details of their monthly income from the plant. These people are farmers who are naturally cautious towards outsiders, especially people who might tell the tax authorities about their earnings. Despite the apparent organisation of accounting and record keeping, the books are not clearly arranged and the calculations are difficult to understand. (See Volume I, Chapter 11 for an estimate of monthly income and expenditure.)

The villagers seem to have been able to compete with other grain mills in their area, about 5 diesel mills within an hours walk of the village. Their price, especially for rice hulling, has been lower and local people prefer to come to a small mill, which is happy to process small quantities, than go to a larger place, where they may have to wait. However, with the extension of an electricity supply to the area, 3 electric mills have been set up, which charge lower prices still, so this further competition may have an effect on the profitability of the Kusongodai system.

Case Study 8.2: Village Ownership of a Biogas Plant.

Village	: Madhubasa	Madhubasa lies 6 km North-East of
Panchayat	: Pushbalpur	Dalkebar, which is on the East-West
Ward No.	: 9	Highway, at the junction with the road
District	: Dhanusha	to Janakpur.
Zone	: Janakpur	Plant used for Irrigation/lighting/cooking.

Madhubasa village people had set up their own cooperative society called "Sano Kalpana Sagha Sanstha", A Society with a Little Vision. A local school master wrote a small booklet on it (Adhikari), so the village was chosen as a place for a Small Farmers' Development Group in 1979. SFDP suggested the village as a site for a community biogas project and DCS did a survey in December 1980.

The village lies at the base of the foothills of the Himalayan range of mountains, so has hills and forests to the North, with the flat North Indian plain to the South. There are 37 families, with a total population of 187 (in 1983). All the families are of one tribal group, the Magars, and all are farmers. The village is at the meeting point of two rivers. These rivers are usually dry, but they are subject to flash flooding in the monsoon season, when water runs off the hills to the North. These floods are getting much worse in recent years, as deforestation and the removal of soil cover means that run-off is increased and less water is absorbed into the hill sides.

The "Society with a Little Vision" was begun in 1964 on the initiative of the people themselves. All villagers are members of this society and 11 persons are office holders. There are regular meetings at which minutes are recorded. The minutes become law in the village, once they have been fully discussed and everyone has signed their name, or made their mark, after the minute (Bulmer).

Madhubasa is not a typical village, although the Magar tribe are noted for their community spirit. The strong, but open, leadership in Madhubasa and the willingness of the people to join in community ventures, put it in a class of its own.

The Approach

The survey by DCS concentrated upon the real needs of the villagers. At first, they had little interest in biogas technology: they had not seen a biogas plant, or even heard of the idea; they did not have a problem with cooking fuel, being so close to the forest. They had two main concerns: the yearly monsoon flash floods were eroding the land on which they were growing their crops; they wanted to irrigate the remaining land, so they could grow more crops on it.

After deciding to work in the village, DCS defined several principles on which we would work: the identity of the village had to be respected; the Society with a Little Vision was unique and all the 37 households in it had to benefit from any development work done in the village. The first priority was to solve the problem of land erosion. After that, a community irrigation scheme could be planned: first by digging wells, then by installing a lift irrigation pump, that could be driven by biogas.

The land erosion problem was reduced by building gabion barriers into the path of the flash floods in the dry river beds. About 5.5 ha of river bed was reclaimed for agriculture, in this way (Bulmer). Several exploratory wells were dug, as local people thought that the Jalad river flowed underground during most of the year. Two permenant wells, 80 m apart were eventually constructed, with an underground plastic pipe connecting them. The Japanese funded Janakpur Agricultural Development Project gave much help for this work, including expert technical advice and the use of digging machinery.

The work of construction of the gabion barriers was done mainly by the villagers themselves, once they had received training in the making of the netting boxes from wire. Stone was brought to the site by a tractor and trailer, loaned by J.A.D.P. This gave us ample opportunity to observe the people at work and to test their cooperative spirit.

Planning for the community biogas irrigation scheme was also done. An economic feasibility study was done (Fulford) in 1981, updated in 1983. The possible profits from growing a wheat crop in the dry season appeared to be enough to cover the loan repayments for the system. A Biogas Committee was set up in the village; the members eventually being the office holders in the Society with a Little Vision. No women were on this committee, although we advised that there should be.

In May 1982, 6 members of the committee went on a "Biogas Tour", visiting the Gobar Gas Company office in Butwal, the group biogas plant in Kusongodai (see Case Study 8.1) and the biogas irrigation scheme in Parwanipur (see Volume I, Chapter 8). The villagers wrote their own report on this visit (Madhubasa). In October of the same year, two of the young men of the village were sent off for a course in engine operation and maintenance at JADP. The village were loaned a diesel engine, so they could become used to its use. Tests were also done to see how much water could be taken from the wells at different times of the year.

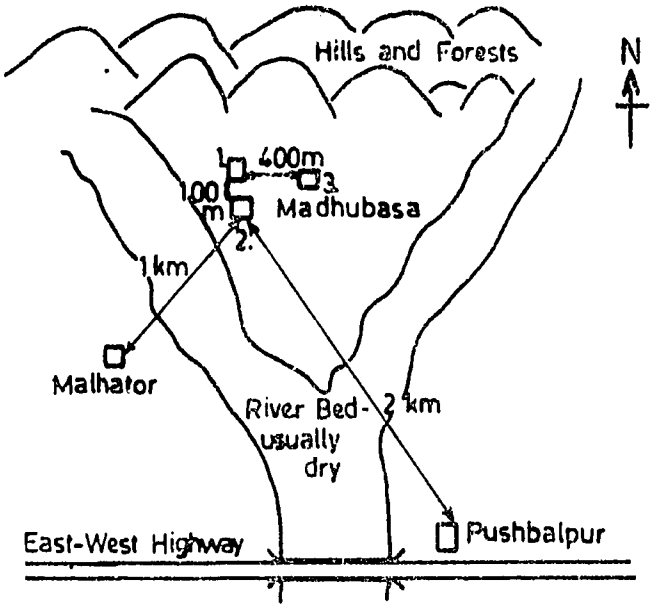

Figure 8.2 A Map of the Area around Madhubasa.

Decisions to be Made

While the biogas plant was originally seen as an answer to one of the villagers' felt needs, that of irrigating their land, consideration was given to alternative uses of the biogas. Irrigation is a seasonal activity, so the pump would be used for only 150 days of the year. The villagers wanted gas lamps in the village, so they could hold society meetings by gas light. Another lamp was placed in a prominent position, so that people from other villages could see it. Two gas ring burners were also placed in the community house, for use in making tea for the meetings and for guests in the village.

Another suggestion was that the engine should be used to run a grain mill, as they had seen the one at Kusongodai. Some people even thought the biogas plant should be sited at Pushbalpur, near the road, where

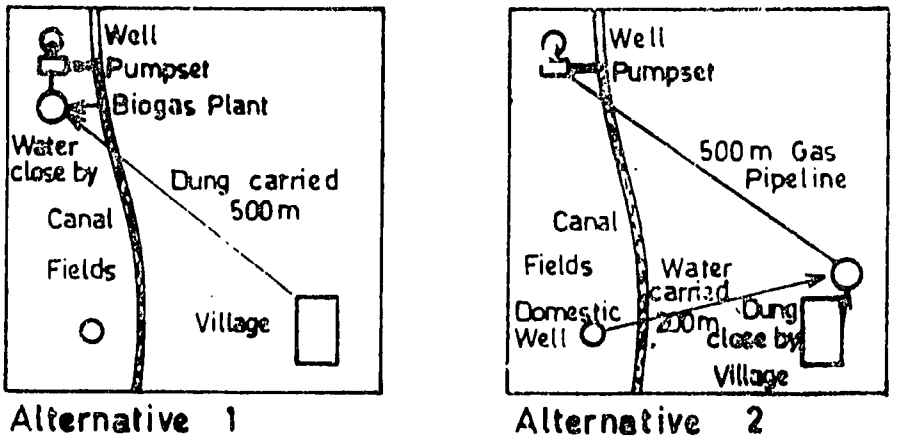

Figure 8.3 Alternative Sites for the Biogas Plant.

such a mill would have more customers. This idea was unanimously rejected at the next meeting, because the women of the village protested to their husbands that they would not benefit from such an idea.

The original scheme for using biogas to run an irrigation scheme has been kept, although the whole system could be expanded to include a mill, in the future. An addition to the original idea, was the use of the pump-set to pump water up to a drinking water storage tank on a hill near the village. The Local Development Department of HMG/N had offered to pay for water pipe and a storage tank for the village.

Siting of the Biogas Plant

From a technical point of view, we recommended that the biogas plant be sited near the engine by the well. The biogas would need to be piped only a short way, and the effluent slurry could be put directly into the irrigation water. Water for mixing the slurry would be available from the well, nearby.(Figure 8.3). The only disadvantage would be that cattle dung would have to be carried from the village: 300 or 400 kg for 500 m each day. The villagers disagreed: carrying dung would take

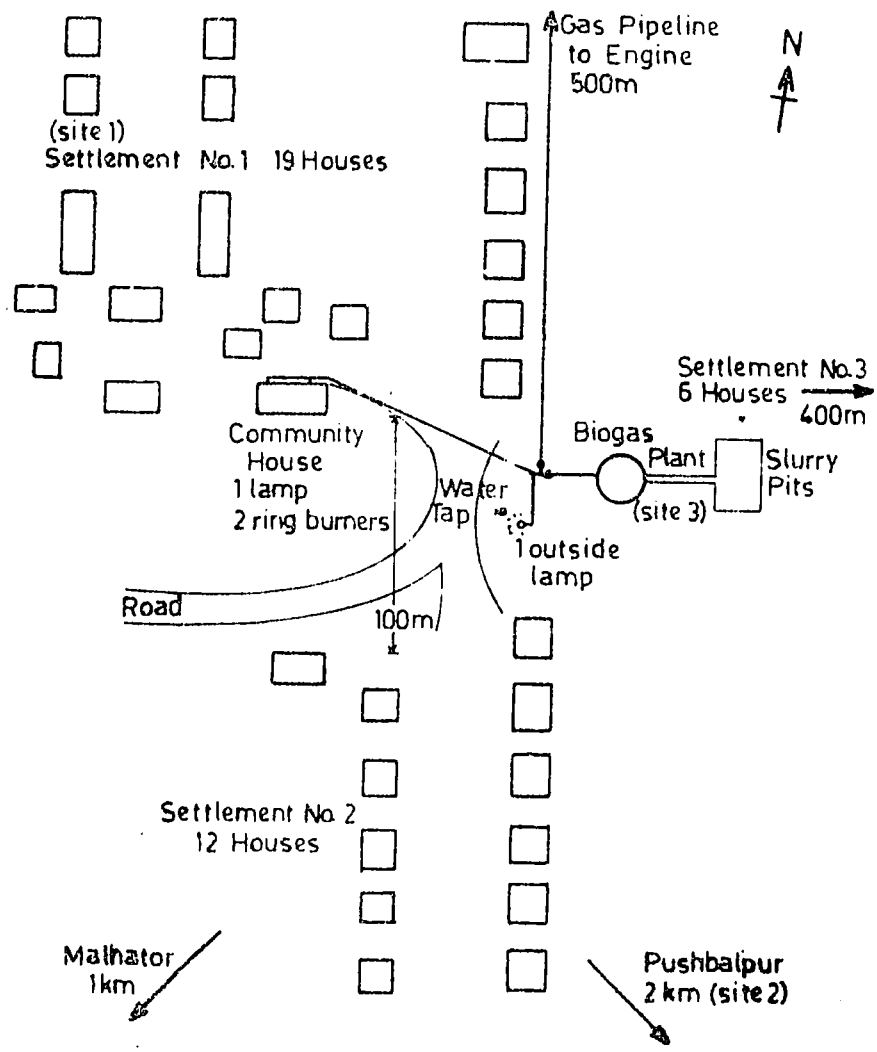

Figure 8.4 Layout of the Settlements in Madhubasa Village.

too long each day, and they were not prepared to keep the cattle away from the village. They were concerned about the security of the biogas plant, being afraid as much of possible attacks from evil spirits as of possible human interference.

The biogas plant was sited in the village. The idea of carrying the gas to the pump each day in a plastic balloon was also rejected. Such a bag, which would have to be at least 7 cu.m in volume, would be difficult to carry and would quickly fail. The idea of a 500 m pipeline to carry the biogas was adopted. If the pipe is of the correct size (see Volume I, Chapter 6), the biogas should reach the engine without much loss in pressure. Such a pipeline proved fairly expensive, and there are concerns about a plastic pipe being chewed by rats.

The question of where the plant should be sited in the village arose. Most of the available land belonged to the leader of the community and his brother, so they wanted to put it near their houses (site no.1 in Figure 8.4). The other villagers wanted the plant to be in the centre of the two main settlements of the village (site 3),(site no.2 at Pushbalpur had already been rejected). The two brothers agreed to give the land between the two settlements for the biogas scheme. The water tap would also be on the same land. The biogas plant is now the first thing that visitors coming up the road to the village see, as they enter the village, so it acts as a status symbol.

The 6 households in Settlement No.3, which is 400 m East of the biogas plant have agreed to take part in the scheme. They will contribute cattle dung, as they will also benefit from the irrigation pumping.

Financial Arrangements

The group biogas plant at Kusongodai had set the precedent of giving a 50% subsidy for community biogas projects, so this was followed for the Madhubasa scheme. The rest of the capital cost had to be paid from a loan from ADB/N, via the SFDP. Not all members of the Society with a Little Vision were members of an SFDG; 28 people were members of Group No. 37, while another 7 formed part of Group No. 67, with 6 people living in Malhator village, about 1 km away (Figure 8.5).

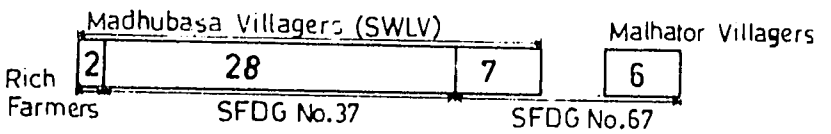

Figure 8.5 Different Groups in Madhubasa Village.

The solution was for the members of SFDG No. 37 to take out the loan in their name, while the other two groups, the richer farmers and the members of SFDG 67, are to pay their contributions to the others. The loan is for 7 years at 11% interest. The subsidy was paid from the USAID grant.

Irrigation of Land

The wells and pump-set are sited by an existing irrigation canal, that takes water from the Jalad river during the monsoon, when it flows above ground. The main profit from the scheme will come from a winter wheat crop grown on the area of land served by this small canal. However, only 2 households have land in this area; another 10 people have land in another place, while 5 households have no land at all. Since all the 37 households in the Society with a Little Vision were supposed to belong to the scheme and benefit from it, they had to somehow all be

352

included.

Several ideas were put forward, but discussions went on for about a year before the matter was resolved. One idea was the definition of "Gas Rights", whereby the people using the engine would pay a fee to those who contributed dung and labour, but did not have land in the irrigated area. A similar system of "Water Rights" was used in other places in Nepal with community gravity irrigation schemes (Martin). This idea seemed to be too complicated for the village. Another idea was to buy a piece of land that was owned by someone from outside the village, but was in the irrigated area. The owner was keen to sell, but there was no obvious source of money with which to purchase it.

The real challenge to the 22 people who had land came from the idea that they should be willing to share it. This idea was not at all popular with the 11 committee members, 10 of whom had land in the irrigated area. The turning point came when the committee members were asked to imagine that they had changed roles, the ones that had land had to imagine that they did not. After an hour of very heated discussion, they all agreed to lease a portion of their land on the "Bathya" system, in which the farmer and the land owner share the crop on a 50-50 basis. The people in the village had come to recognise that living in community meant that things, even land, had to be shared.

The real test of this agreement, which was written in the minutes and to which everyone in the village has put their signature or mark, is when they start getting an income from the wheat harvest.

Effectiveness of a Village Biogas System

At the time of writing, the system has not been effectively tested. People are putting their cattle dung into the biogas plant, on a rota

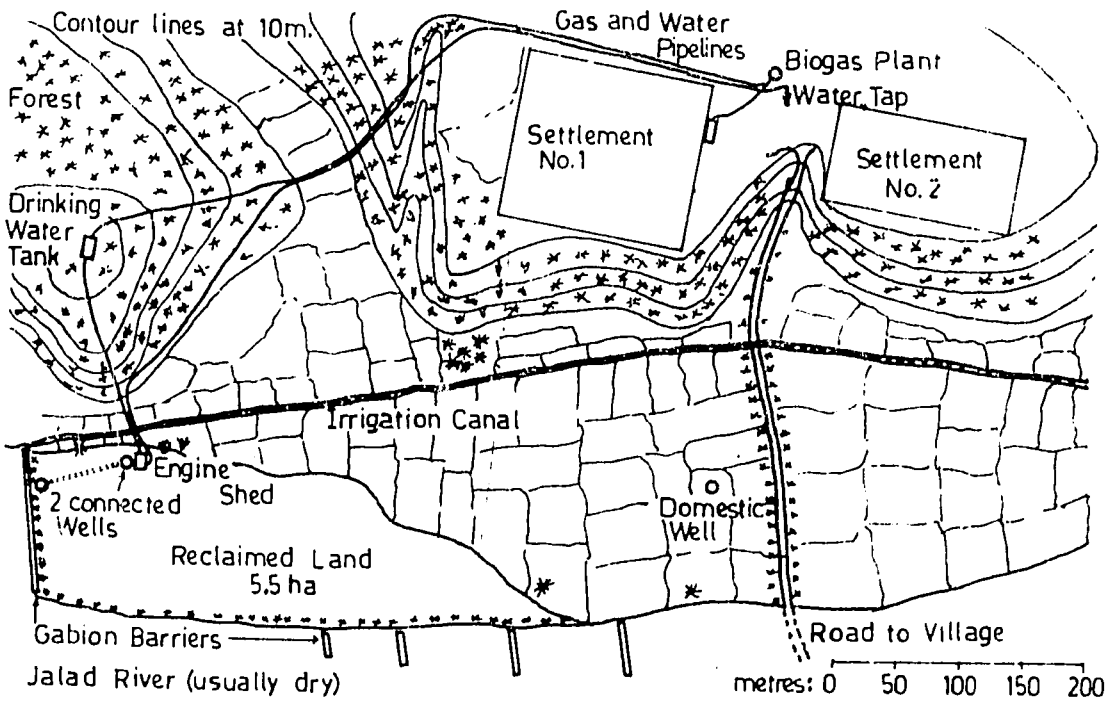

Figure 8.6 The Layout of the Finished Biogas System in Madhubasa.

system. The engine has been used to pump water to the drinking water tank and for irrigation. The engine runs well on biogas, and sufficient gas comes down the 500 m pipeline. Each component works well, but the real test comes when the system is used to irrigate a winter wheat crop which is then harvested and sold.

An evaluation of this project is yet to be done.

The Effectiveness of the Original Assumptions

While a larger size biogas plant does give some economy of scale, it is insufficient to reduce the price per cu.m of biogas to that which a poor farmer can afford. The real price reduction to the farmers in these projects came from a subsidy: a political rather than an economic or technical solution.

The real value of a community, a group or a village, biogas plant comes when it is used to run an engine which can be used for activities that earn an income for the villagers. This concept introduces a vitally important new dimension into the whole concept of community biogas.

People's commitment to a cooperative project depends on the benefit that they receive from it. If the project is earning a cash income in which all the members of the community can share, then people's commitment is likely to be far higher than if the biogas is used for domestic purposes alone. Thus the second assumption strongly reinforces the third, which is the weakest one of the three.

Vol. I

BIBLIOGRAPHY

ADB (1982, Dec) Nepal Agricultural Sector Strategy Study; Asian Development Bank, HMG, Kathmandu: Vol. I & Vol. II.

APHA (1955 10Ed) Standard Methods for the Examination of Water, Sewage and Industrial Wastes; American Public Health Assoc., New York:

Agarwal A. (1983, Feb) The Forgotten Energy Crisis; New Scientist, London, U.K.: V. 97, N. 1344, p. 377

Amal (1972) Natural Draft Injecters for Burning Sludge Gas; Amal Ltd., Birmingham, B6 7ES, UK: List 403/3

Barnett A., Pyle L., Subramanian S.K. (1978) Biogas Technology in the Third World; International Development Research Centre, Ottawa, Canada: IRDC-105e, ISBN 88936 162 2

Bhasin K. (1979, Jan) A South Asian Experience of Training for Participatory Development: Freedom from Hunger Campaign: FAO, Bangkok, Rome

Bhasin K., Palshikar V., Rao L. (1980) The Role and the Training of Development Activists; FAO, New Delhi/Rome or CDRA, Madras:

Bird R.B., Stewart W.e., Lightfoot E.N. (1960) Transport Phenomena; John Wiley, New York, USA: ISBN 0 471 07392X

Bulmer A. (1980, Aug) A Survey of 3 Community Biogas Plants in Nepal; (DCS) NTIS, Springfield, 22161, USA: PB83-166-991

Bulmer A., Schlorholtz A. (1979, Jan) Gobar Gas Survey in Nepal; (DCS) NTIS, Springfield, 22161, USA: PB83-166-991

CAI (1969) Concrete Handbook; Concrete Association of India, Bombay:

CAI (1972) Cement Plastering; Concrete Association of India, Bombay:

CBS/HMG (1972) Foreign Trade Statistics of Nepal (1967-1971); Central Bureau of Statistics, HMG/N, Kathmandu, Nepal:

CEDA (1981) The Status of Women in Nepal; Centre for Economic Development and Administration, Tribhuvan Univ., Kathmandu: Vol. II, Part 2 & Vol. II, Part 9

Campbell J.G. (1983) People and Forests in Hill Nepal: Community Forestry, Ministry of Forestry, Kathmandu:

Clark G.C., Crowley M.M., de los Reyes B.N. (1977, May) Annual Report on Nepal's Experimental Field Action-cum-research Project; Small Farmer's Development Unit: FAO, Bangkok

Clyde (-) "O" Ring Specialists; Clyde Rye Bearings Ltd., London SW6 1DW:

Coburn B.A. (1977) Study of the Energy Needs of the Food System in Nepal; Progress Report, American Peace Corps, Kathmandu:

Devkota G. (1982) Report on Second Inspection Visit to Dome Design of Gobar Gas Plants Constructed in Pokhara; Gobar Gas tatha Krishi Yantra Bikash, Butwal, Nepal:

Devkota G. (1982) Efficiency of Gobar Gas Stoves; Gobar Gas tatha Krishi Yantra Bikash (P) Ltd., Butwal, Nepal:

Dunn P.d. (1978) Appropriate Technology, Technology with a Human Face; McMillan, London: ISBN 0-333-24207-6

ERDG (1976, Nov) Nepal: The Energy Sector; Energy Research and Development Group, Tribhuvan Univ., Kathmandu:

ESCAP (1980) Guidebook on Biogas Development; United Nations Energy Resources Series No.21: ST/ESCAP/96

353

Eggling G., Guldager R.& H., Hilliges G., Sasse L., Tietjan C., Werner U. (1979) Biogas: Manual for the Realisation of Biogas Programmes; BORDA, Bremen, W.Germany:

El-Halwagi M.M. (1980) The Development and Application of Biogas Technology in Rural Areas of Egypt; National Research Centre, Egypt: Applied Science and Technology Project No. 263-0016

Ellegard A., Jonsson A., Zellergrist A. (1983) Biogas - Not Just a Technology: SIDA, Gothenburg, Sweden:

FAO 40 (1977) China: Recycling of Organic Wastes in Agriculture: Food and Agricultural Organisation, Rome: ISBN 92-5-100524-9

FAO 41 (1978) Azolla Propogation and Small Scale Biogas Technology; Food and Agricultural Organisation, Rome: ISBN 95-5-100721-7, Rome

FFHC (1973) People's Participation in Development: Indian Freedom From Hunger Campaign Society, Calcutta, India: (also from FAO, New Delhi, Rome)

Finlay J.H. (1978) Operation and Maintenance of Gobar Gas Plants: NTIS, Springfield, 22161, USA (DCS): PB83-162 107

Fry L.J. (1974) Practical Building of Methane Power Plants; Fry, Santa Barbara, USA:

Fulford D.J. (1981) Gobar Gas Irrigation in Nepal; Biogas Nepal, Shakti Pub., PO 1309, Kathmandu, Nepal: V.13, p.6

Fulford D.J. (1978, Sep) A Commercial Approach to Biogas Extension in Nepal; Appropriate Technology, London: V.8, N.2, p.14

Fulford D.J. (1978) Biogas in Nepal: State of the Art: (DCS) NTIS, Springfield, 22161, USA: PB83-166 702

Fulford D.J. (1979) Using Gobar Gas to Fuel a Cheese Plant in Karkimankamana; DCS, Butwal, Nepal:

Gardiner M. (1979) Running a Fridge on Cowdung Gas: Biogas Nepal, Shakti Pubs, PO 1309, Kathmandu, Nepal: No.5, p.3

Garg M.K. (-) The Development of an Appropriate Technology for Decentralised Pottery Industry in Rural India: Appropriate Technology Development Assoc., Lucknow, India:

Gittenger J. Price, Ed. (1973) Compounding and Discounting Tables for Project Evaluation: Economic Development Inst. of the International Bank for Reconstruction and Development, Washington, USA:

Gopal, Sharma (1981) Water Hyacinth Composition:

Hackett W.F., Conners W.J., Kirk T.K., Zeikus J.G. (1977) Microbial Decomposition of Synthetic 14C-labelled Lignin in Nature: Appl. Environ. Microbiol.: 33,43

Hall (-) Hallprene "O" Rings: Hall & Hall Ltd., UK: BS 1806, 1962

Hobson P.N., Summers R., Bousfield S. (1979) Uses and Analysis of Digested Sludge: A Symposium on Anaerobic Digestion, University College, Cardiff, UK: (Rowett Inst., Aberdeen)

Hollingdale A.c., Coward L.D.G. (1979) Biogas Technology in Cold Climatic Conditions in Korea; Tropical Products Inst., ODA, London WC1X 8LU:

House D. (1978) The Complete Biogas Handbook: VAHID, Aurora, CR7002, USA:

Idnani M.A., Varadarajan S. (1974 2Ed) Fuel Gas and Manure by Anaerobic Fermentation of Organic Materials; Indian Council of Agricultural Research, New Delhi: ICAR-TB/46

Israelson O.W., Hansen V.E. (1962) Irrigation Principles and Practices: John Wiley, New York:

2.56

Jewell W.J., Chandler J.A., Dell'Orto S., Fanfoni K.J., Fast S., Jackson D., Kabrick R.M. (1981, Sept) Dry Fermentation of Agricultural Residues: Solar Energy Research Inst., Golden, 80401, USA: SERI/TR-09038-7 (NTIS)

Jewell W.J., Dell'Orto S., Fanfoni K.J., Hayes T.d., Leuschner A.P., Sherman D.F. (1980, Apr) Anaerobic Fermentation of Agricultural Residues: Cornell Univ., New York, 14853: DE-AC02-76ET20051, OS Dept. of Energy

KVIC (1975) Gobar Gas How and Why: Khadi and Village Industries Commission, Bombay, India 400056:

KVIC (1972) Details of Mixer (Blue Print): Khadi and Village Industries Commission, Bombay 400056, India:

Khan A.W., Trotter T.M. (1978) Effect of Sulphur Containing Compounds on Anaerobic Degradation of Cellulose to Methane by Mixed Cultures Obtained from Sewage and Sludge: App. & Environ. Microbiology: V. 35, No.6

Kirloskar (-) Operationa and Performance of Engines Running on Biogas: Kirloskar Oil Engines Ltd., Pune, India:

Kirloskar (-) Selection Charts for Kirloskar Diesel Engine Pumping Sets; Kirloskar Oil Engines, Pune, India:

Kirloskar (-) Dual Fuel Biogas Engine: Kirloskar Oil Engines Ltd., Pune, India:

Kwon I., Kim H. (1978) Studies on Biogas Production from Several Animal Faeces; ESCAP, Expert Group Meeting on Biogas, Bangkok: (Seoul National Univ., Suwon, Rep. of Korea)

Lau-Wong M. (1982, May) Enhancement of Biogas Production in Cold Climate; UNESCO/COSTED Conf., Kathmandu:

Lau-Wong, M. (1979) Evaluation and Analysis of Chemically Treated Straw, and a Stochastic Simulation Model of the Ruminant's Digesive System; Cornell Univ., New York, USA: Ph.D. Thesis

Lichtman R.J-. (1983) Biogas Systems in India: Volanteers in Technical Assist., Arlington 22209-2079, USA: ISBN 0 86619 167 4

Machinery's - Horton H.L., Schubert P.B., Garratt G. (1971 9Ed) Machinery's Handbook; Industrial Press, New York: Lib. Congress 14-2166

Mahato K. (1979, Apr) Case Study of Group No. 7: Small Farmers' Development Project, Freedom From Hunger Campaign, FAO, Bangkok: SFDP N-35

Makhijani A, Poole A. (1976) Energy and Agriculture in the Third World; Ballinger, Cambridge, USA: ISBN 0 88410 342 0

Maramba F.D. (1978) Biogas and Waste Recycling: the Philippine Experience; Liberty Flour Mills Inc., Metro Manilla, Philippines:

McCarty P. (1964) Anaerobic Waste Treatment and Fundimentals:

McFarlane P.N., Preffer J.T. (1981) Biological Conversion of Biomass to Methane: Solar Energy Research Inst., Golden, 80401, USA: SERI/TR-98357-1 (NTIS)

McGarry M.G., Stainforth J. -Eds (1978) Compost, Fertilizer and Biogas Production from Human and Farm Wastes in the People's Republic of China: International Development Research Centre, Ottawa, Canada: IDRC-TS8e

Meier U. (1978) The Pauwa Energy System; SATA, PO 113, Kathmandu, Nepal:

357

Merrit F.S. - Ed (1978, 2Ed) Standard Handbook for Civil Engineers: McGraw-Hill, New York: ISBN 0-07-041510-2
Meynell P.J. (1976) Methane: Planning a Digester; Prism Press, Dorchester, UK: ISBN 0 904727 122
Minto S.D., Westley S.B. (1975) Low Cost Rural Equipment Suitable for Manufacturers in East Africa; Inst. for Development Studies, PO 30197, Nairobi, Kenya:
Mosey F.E. (1979) Sewage Treatment using Anaerobic Fermentation; Symposium on Anaerobic Digestion, University College, Cardiff, UK: (Water Research Centre, Stevenage)
Moulik T.K., Srivastava U.K. (1975) Biogas Plants at the Village Level: Problems and Prospects in Gujarat; CMA, Indian Institute of Management, Ahmedabad, India: IIM Monograph 59
NAS (1981) Methane Generation from Human, Animal and Agricultural Wastes; National Academy of Sciences, Washington, USA: No.19
Pang A. (1978) Economics of Gobar Gas: NTIS, Springfield, 22161, USA (DCS): PB83-166 694
Patel (-) Gobar Gas Appliances; Patel Gas Crafters (P) Ltd., Bombay 400 054, India:
Perry R.H., Chilton C.H. -Eds (1973, 5Ed) Chemical Engineers Handbook; McGraw Hill, New York, USA: ISBN 07 049478 9
Picken D.J. (-) Uses of Biogas for Thermal, Mechanical and Electrical Power Generation; Leicester Polytechnic, UK:
Pritchard R., Guy J.J., Connor N.E. (1977) Industrial Gas Utilization; Bowker, Epping, UK (British Gas Corp.): ISBN 0 859 35 059 2
Pyakural, Karki, Axinn (1978) Techno-Socio-Economic Study on Biogas; Biogas Nepal, Shakti Pubs., PO 1309, Kathmandu: N.2, p.6
Pyle D.L. (1979) Anaerobic Digester Designs in the Third World: Symposium of Anaerobic Digestion, University College, Cardiff, UK: (Imperial College, London)
RAFE 36. (1978) Small Farmer's Development Manual; FAO, Bangkok, Thailand:
Reddy A.K.N. (1980) Rural Technology: Indian Institute of Sciences, Bangalore, India:
Roy R. (1981, Jun) Family and Community Biogas Plants in Rural India: Appropriate Technology, London: V.8., N.1, p.17
SATA (1977) Mountain Environment and Development; Swiss Assoc. for Technical Assistance in Nepal, Kathmandu:
SPIIBD (-) Construction of Marsh-gas-producing Tanks (Digesters) in Simple Ways; Szechwan Provincial Institute of Industrial Building Design, China: (Copied by A. Bachmann, SATA, PO 113, Kathmandu, Nepal)
Sathainathan M.A. (1975) Biogas Achievements and Challanges; Assoc. Volantary Agencies for Rural Development, New Delhi:
Sharma C.K. (1977) River Systems of Nepal; Kathmandu:
Sharma C.K. (1974) Ground Water Resources of Nepal; Kathmandu:
Shibatasan (1980) Irrigation Variety Trial on Early Paddy in 1980, Proposed Cropping Pattern and Expected Production Increase on Model Infrastructure Programme, Janakpur Agricultural Development Project, Janakpur, Nepal:
Soubolle B.R. (1976) Fuel Gas from Cow Dung: Sahayogi Press, Kathmandu:

Stern P.H. (1979) Small Scale Irrigation; Intermediate Technology Pubs., London: ISBN 0 903031 64 7

Stevens M.E. (-) Land Use Patterns for Marginal Land; APROSC, Kathmandu:

Streeter V.L. (1971, 5Ed) Fluid Mechanics; McGraw Hill, New York: Lib. Congress 77-125110

Subba-Rao (1980) Soil Microorganisms and Plant Growth: Oxford & IBH Pub. Co., New Delhi, India 110001:

Subramanian S.K. (1977) Biogas Systems in Asia; Management Development Institute, New Delhi 110057:

Tam D.M., Thanh N.C. (1982) Biogas Technology in Developing Countries; Environmental Sanitation Reviews, AIT, Bangkok, Thailand, 19: ISSN 0125-5088

Thery D. (1981) The Biogas Progress in India and China: Ecodevelopment News No. 19, UNEP, Paris: (Resource Management & Optimization, V.1 (4), Oct. 61, p. 289)

UNIDO (1980, Jan) Biogas Utilization; United Nations Industrial Development Organisation: (Sichuan Provincial Office for Biogas Development, China), ID/WG.321/6

Van Buren A., Crook M. -Eds (1979) A Chinese Biogas Manual; Intermediate Technology Pubs., London, UK: ISBN 0 903031 6 55

Van Soest P.J., Robertson J.B. (-) Composition and Nutritive Value of Uncommon Feedstuffs; Dept. Animal Science, Cornell Univ., New York:

Weast R.C., Astle M.J. (1979, 60Ed) Handbook of Chemistry and Physics; CRC Press, Boca Raton, USA: ISBN 0 8493 0460 8

World Bank (1975) Agricultural Credit, Sectors Policy Paper; World Bank, Washington D.C.:

Wyatt Smith J. (1982) The Agricultural System in the Hills of Nepal; APROSC Occ. Papers, 1, Agricultural Projects Research Centre, Kathmandu:

Yawalker K.S., Agarwal J.P., Bodke S. (1977, 4Ed) Manures and Fertilizers; Agri-Horticultural Pub. House, Nagpur, India:

Vol. II

BIBLIOGRAPHY

Bell, Boulter, Dunlop, Keiller (1973) Methane, Fuel of the Future: Andrew Singer, Bottisham, UK: ISBN 0 903315 05 X

Bente P.F. -Ed (1981) The International Bio-Energy Directory; Bio-Energy Council, Washington, USA:

Brakel J.V. (1980) The Ignis FAtus of Biogas; Delft Univ. Press, Holland: ISBN 90 67750 494

Chung Po -Ed (1980) Animal Waste Treatment and Utilization; Council for Agricultural Planning and Development, Tapei, Taiwan:

Devkota G. (1983) Biogas Research and Development in Nepal: (Gobar Gas tatha Krishi Yantra Bikash (P) Ltd., Butwal, Nepal): International Workshop on renewable Energy Resources, Lahore, Pakistan.

Devkota G. (1983) Utilization of Eupatorium Species as an Alternative Feedstock for Producing Biogas: Gobar Gas tatha Krishi Yantra Bikash (P) Ltd., Butwal, Nepal:

ECDC-TCDC (1981) Renewable Sources of Energy - Vol. II, Biogas; ESCAP, United Nations, Bangkok: ST/ESCAP/160

Finaly J.H., Shrestha P.C. (1976-1980) First, Second, Third Inspection Visits to 95 Nepali Biogas Plants: (DCS) NTIS, Springfield, 22161, USA: PB83-166 694

Freemen C., Pyle L. (1977) Methane Generation by Anaerobic Fermentation - Annotated Bibliography; Intermediate Technology Pubs., London WC2E 8HN: ISBN 0 903031 41 8

Ghate P.B. (-) A Pilot Project to Investigate a Decentralised Energy System; Planning, Research and Action Div., Lucknow, India:

Karki A.B., Coburn B.A. (1976) The Prospect of Biogas as One of the Sources of Energy in Nepal; Div. Soil Science and Agricultural Chemistry, HMG/N, Khumaltar, Nepal: (American Peace Corps, Kathmandu)

Mazumdar A. (1982) Biogas Handbook; TATA Energy Research Inst., Bombay 400023, India:

Muzumdar A. (1982) Review of the Literature on the Promotion of Biogas Systems; TATA Energy Research Inst., Bombay 400023:

NAI (1973) Methane Digesters for Fuel and Fertilizer; New Alchemy Inst., Woods Hole, 02543, USA: No. 3

PRAD (-) Community Biogas Plant; Planning, Research and Action Div., Lucknow, India:

Patankar C.L. (1977) Recent Developments in Gobar Gas Technology; Gobar Gas Development Centre, KVIC, Bombay:

Prasad C.R., Prasad K.K., Reddy A.K.N. (1974) Biogas Plants, Prospects, Problems and Tasks; Economic and Political Weekly: IX (32-34), Special Number

Raman N.V., Narayanaswarmy V.P., Sharma P.C., Jayaraman H.B. (1979, Apr) Ferrocement Gas Holder for Biogas Plants; Journal of Ferrocement, AIT, Bangkok: V.9, N.2, p.93

Ruchen C., Nianguo L. (1981, Sept) The Development of Biogas Utilization in China; Biogas Journal, App. Science Pub., London: V.1, N.1, pp. 39-46

Sharma C.K.H. (1974) Land Slides and Soil Erosion in Nepal; S. Sharma, Kathmandu:

360

Singh R.B. (1973) Biogas Plant Designs with Specifications: Gobar Gas Research Station, Ajitmal (Etawah), India:
Singh R.B. (1974) Biogas Plants: Gobar Gas Research Station, Ajitmal (Etawah), India:
Singh R., Chhabra N.N. (1976) The Economics of Cow-Dung Gas Plants; Indian Council of Agricultural Research, New Delhi:
Srinivasan H.R. (1978) Gobar Gas, Retrospects and Prospects; Khadi and Village Industries Commission, Bombay 400056:
UNESCO (1982) International Ditectory of New and Renewable Sources of Energy; UNESCO, United Nations, Paris: (SERI, Golden, USA)
UNESCO (1983) The Fragile Mountain (Film); UNESCO, United Nations, Paris:
UNIDO (1979) Appropriate Technology for Energy for Rural Requirements; UNIDO, United Nations, Monocraphs on Appropriate Industrial Development: No.5
USAID (1981) Bioenergy Conversion Handbook for Developing Countries; Office of Energy, USAID, Washington, USA:
Vaclav S. (1979, Jul) Biogas Production in China: Development Digest, USAID, Washington, USA: V.XVII, N.3, pp. 25-28 (World Development V.4, No.10-11, pp. 927-937, Nov. 1976)

361