Single-Phase vs. Three-Phase Power Distribution Systems in Rural Areas

By
The Joint Research Team
Electric Power System Project
Cairo University/MIT

Prepared by
Technology Adaptation Program
Massachusetts Institute of Technology
Cambridge, Massachusetts 02139

Sponsored by
United States Agency for International Development

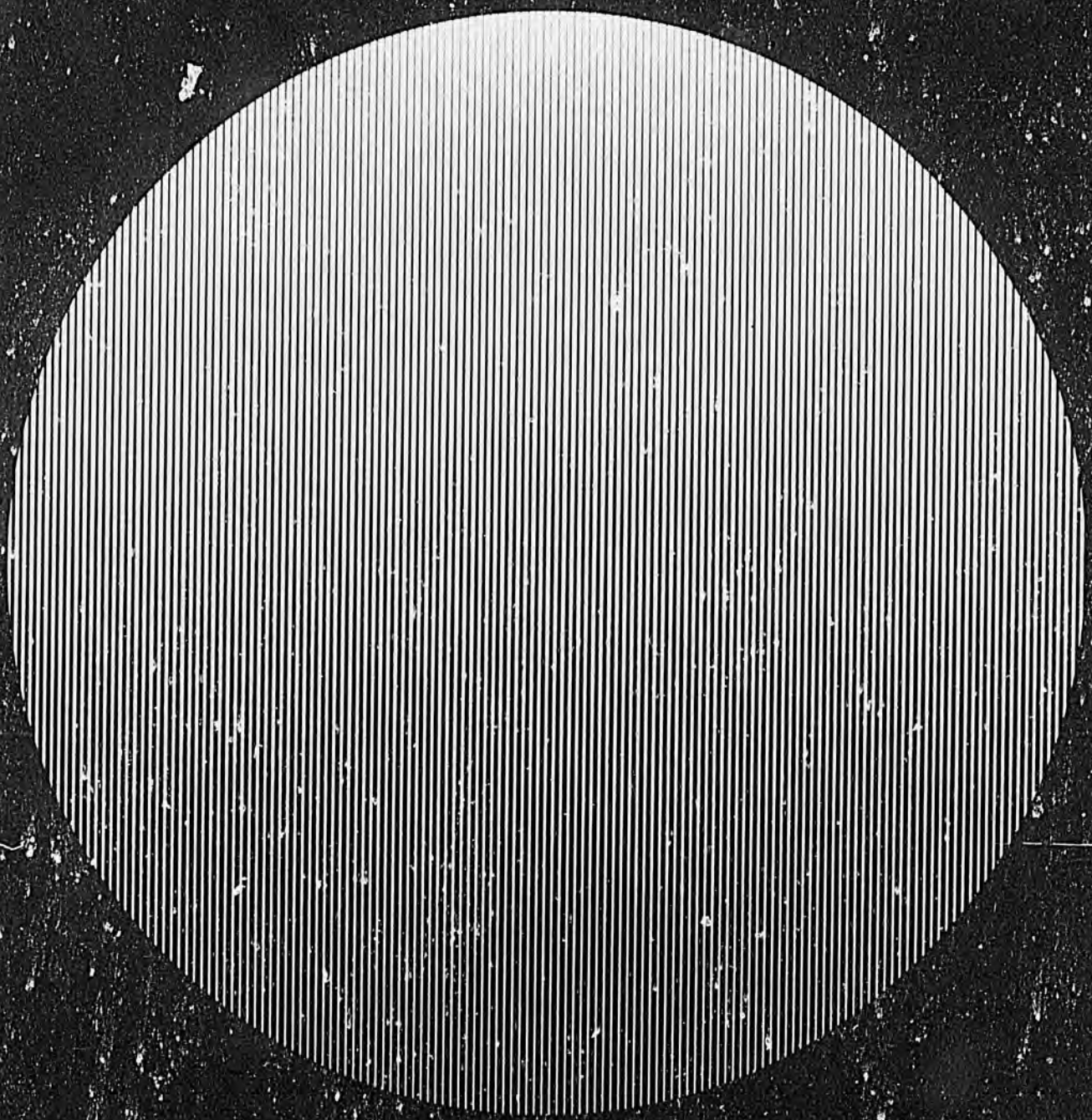

TAP Report 81-7

August 1981

Cairo University/Massachusetts Institute of Technology

Technological Planning Program

SINGLE-PHASE vs. THREE-PHASE POWER DISTRIBUTION SYSTEMS IN RURAL AREAS

RESEARCH TEAM

Cairo University

T.H. Fawzi
H. Attia
K. Farahat

Ministry of Electricity

E. El-Sharkawi
E. Taha
M. Rashad
A. Ghanem

PROJECT ON

THE LONG TERM INVESTMENT PLANNING FOR

THE EGYPTIAN ELECTRIC POWER SYSTEM

PRINCIPAL INVESTIGATORS

Cairo University: M.S. Abou Hussein, S. El-Sobki

M.I.T.: M. Weitzman, J. Kirtley

Ministry of Electricity: M.M. Abaza

INTRODUCTION

This report presents the results of the Rural Planning subgroup work during Phase II of the project from September 1978 to June 1980. The question addressed was whether it would be economically advantageous to replace 3-phase power distribution with single-phase in selected rural areas of Egypt.

Distribution systems on two voltage levels were analyzed in some sample cases to determine if single-phase power distribution would be less expensive than the present 3-phase system. The medium voltage level sample cases were: (1) Qaha substation area in the Nile Delta with a high population density; (2) Bany Mazar substation area in Upper Egypt with low population density and villages scattered at relatively large distances from the substation; and (3) Sugar Nag Hammady substation area in Upper Egypt with a confined population and a heavy irrigation load. The low voltage sample cases were a small village, El-Kom El-Ahmar, and a large village, Aghoor El-Kobra, with a substantial industrial load. In each case a number of single-phase and 3-phase designs that meet voltage level requirements were compared by cost. The single-phase designs were assumed to have the same routing as the present 3-phase system. The 3-phase designs included the present system, as well as designs thought to yield improvement in cost or voltage level regulation.

Results of this study demonstrate that the use of single-phase designs can result in savings of 11% - 22% of total annual costs in the medium voltage level system. For the low voltage level system, savings of 9% can be realized for the small village and 13% for the larger, if lighter poles were used for the single-phase design. For areas with heavy irrigation loads, the use of single-phase feeders would be limited by the substantially higher cost of single-phase motors.

SINGLE PHASE VERSUS THREE PHASE IN RURAL DISTRIBUTION SYSTEMS

SECTION I

LOW VOLTAGE DISTRIBUTION SYSTEMS

PREFACE

This report is one of a series of publications which describe various studies undertaken under the sponsorship of the Technology Adaptation Program at the Massachusetts Institute of Technology.

The United States Department of State, through the Agency for International Development, awarded the Massachusetts Institute of Technology a contract to provide support at M.I.T. for the development, in conjunction with institutions in selected developing countries, of capabilities useful in the adaptation of technologies and problem-solving techniques to the needs of those countries. This particular study describes research conducted in conjunction with Cairo University, Cairo, Egypt.

In the process of making this TAP supported study some insight has been gained into how appropriate technologies can be identified and adapted to the needs of developing countries per se, and it is expected that the recommendations developed will serve as a guide to other developing countries for the solution of similar problems which may be encountered there.

Fred Moavenzadeh

Program Director

TABLE OF CONTENTS

	Page
INTRODUCTION	1
I. LOW VOLTAGE DISTRIBUTION SYSTEMS	2
A. Introduction	3
B. Methodology	7
- Cost estimation	9
- Computation of the voltage drops and energy losses	10
- Computation of short circuit currents	11
C. Data	13
D. Study Case: El-Kohm El-Ahmar Village	17
E. Study Case: Aghoor El-Kobra	36
F. Conclusions and Recommendations	63
II. MEDIUM VOLTAGE DISTRIBUTION SYSTEMS	67
A. Introduction	68
B. Methodology	71
- Cost estimation	72
- Computation of voltage drops	73
- Computation of energy losses	76
- Irrigation motors	77
C. Data	78
D. Study Case: Qaha	84
E. Study Case: Bany Mazar	108
F. Study Case: Sugar Nag Hammady	122
G. Conclusions and Recommendations	149

INTRODUCTION

This report presents the results of the Rural Planning subgroup work during Phase II of the project from September 1978 to June 1980. The question addressed was whether it would be economically advantageous to replace 3-phase power distribution with single-phase in selected rural areas of Egypt.

Distribution systems on two voltage levels were analyzed in some sample cases to determine if single-phase power distribution would be less expensive than the present 3-phase system. The medium voltage level sample cases were: (1) Qaha substation area in the Nile Delta with a high population density; (2) Bany Mazar substation area in Upper Egypt with low population density and villages scattered at relatively large distances from the substation; and (3) Sugar Nag Hammady substation area in Upper Egypt with a confined population and a heavy irrigation load. The low voltage sample cases were a small village, El-Kom El-Ahmar, and a large village, Aghoor El-Kobra, with a substantial industrial load. In each case a number of single-phase and 3-phase designs that meet voltage level requirements were compared by cost. The single-phase designs were assumed to have the same routing as the present 3-phase system. The 3-phase designs included the present system, as well as designs thought to yield improvement in cost or voltage level regulation.

Results of this study demonstrate that the use of single-phase designs can result in savings of 11% - 22% of total annual costs in the medium voltage level system. For the low voltage level system, savings of 9% can be realized for the small village and 13% for the larger, if lighter poles were used for the single-phase design. For areas with heavy irrigation loads, the use of single-phase feeders would be limited by the substantially higher cost of single-phase motors.

SINGLE PHASE VERSUS THREE PHASE IN RURAL DISTRIBUTION SYSTEMS

SECTION I

LOW VOLTAGE DISTRIBUTION SYSTEMS

Research Team:

Th. Fawzi
E. El-Sharkawi
H. Attia
K. Farahat
E. Taha
M. Rashad
A. Ghanem
Z. Abdel-Azim

A. INTRODUCTION

Rural electrification in Egypt involves over 5000 villages and some 30,000 attachments with a population less than 1000. About 3000 villages have been electrified in the past three years and the present plan calls for the electrification of over 2000 villages in the next three years, with attachments electrification starting at a later date. The estimated length of the distribution system for the completed project is 1000 km at the subtransnission level (66 kv), 13000 km at the primary distribution level (11 kv) and 17000 km at the secondary distribution level (380/220 v). The total demand is estimated to be 2000 MVA and the total cost runs somewhere near 350 million L.E.

Electrical power distribution in rural areas has been tranditionaly through three phase feeders on both the primary and secondary distribution levels. Rural substations, at which the voltage is stepped down from 66 kv (or 33 kv) to 11 kv, feed a residential and irrigation loads through 3wire radial 11 kv overhead lines. A

village is often served by a number of pole mounted three phase 11000/380-220 v transformer stations located on the periphery of the village. Number of transformers vary between one and five and the present ransformer ratings are 25, 63, 100 and 160 KVA , though the trend is to use fewer transformers with larger ratings. Single phase 10 KV transformers are rarely used.

The three phase transformers located at a village periphery are usually wye-wye connected with isolated neutral on the high voltage side and an earthed neutral on the low voltage side. There are usually three feeders radiating from each transformer inside the village. The feeders are carried on lattice, tube or concerete type poles. Each pole carries three phase-wires, the neutral and a street-lighting wire which is alternately connected to one of the phase wires. The phase wires are aluminum with a cross sectional area of 35 or 16 sq. mm. The neutral and lighting wires are usually 16 Sq.mm - aluminum. The maximum feeder length is usually 5000 meters. Loads are mostly single phase - fed by single phase laterals - and some three phase motor loads for irrigation,

mills and tile factories with ratings of 15 horsepower or less.

The alternative distribution system which is under consideration is the single phase 440/220 volt, three wire system on the secondary distribution level. On the primary distribution level, there can be one of two variants depending on the availability of the neutral wire. In the first variant 3 phase, 3 wire 11 KV feeders radiating from the rural substation will fan out to serve some or all of the villages and irrigation loads as 11 KV single phase circuit. This voltage will be stepped down to the secondary distribution voltage of 440/220 volt by means of single phase, two bushing transformers with mid tapped secondaries. In the second variant, the transformers at the rural substation would have wye connected secondaries with solidly earthed neutrals and a phase voltage of 11 KV. Primary distribution feeders will leave the substation as 3 phase, 19/11 KV, 4 wire system and fan out to serve some or all of the loads as 11 KV single phase circuit. Voltage stepping down at the load will be through single phase,

single bushing 440/220 volt transformers.

The object of the present work is to examine the possible adaptation of the single phase system to rural distribution systems in Egypt as exmplified by a number of study cases. Only the first variant of the primary distribution system is assumed since it can be integerated in the present three phase systems more readily. A complete cost-benefit comparison between three phase designs and single phase designs is conducted.

This report is confined to the comparison between the secondary distribution systems, while the comparison between the primary distribution networks is dealt with in another report. The methodology of the analysis and the data assumed are explained in the following sections.

Two typical villages have been considered as study cases. They have been chosen to exmplify the different sizes, population and load requirements that are usually met. The first is a small village with a population of about 3500 , it has small industrial load and is presently fed by two three-phase transformers (100KVA,63KVA).

The second is a large village with a population of about 13,000 . It has a substantial industrial load and is presently fed by four three-phase transformers (4x100 KVA).

B. METHODOLOGY

Three measures indicate the adequacy of the secondary distribution network (1) Voltage regulation, (2) Short circuit level and (3) Reliability. In the study cases considered, single phase designs which meet the same voltage regulation requirement as the present three phase designs have been developed. The short circuit levels, and the fixed and running costs of the two systems have been compared. The levels of reliability of the two systems are basicaly equal and were not included in the comparison.

In addition to the voltage regulation requirement, the following has been assumed in the design of the single phase secondary distribution system :

1. Number and location of the single phase transformers are the same as those of the present three phase design. The reason for this restriction is that because of the geographic nature of the land, the number of suitable substation sites at the village periphery is usually very limited. In addition, no sites can be chosen inside the village because the limited width of Streets in Egyptian villages-usually less than three meters - does not provide enough clearence for the 11 KV lines. The common practice of using numereous small single phase transformers spreading through the load area can not be adopted in most Egyptian villages.

2. Larger overloading can be permitted in the selection of single phase transformers ratings (up to120%).

3. The number of feeders radiating from each single phase transformer is equal to four instead of three in the present three phase design. This is necessary to limit the feeder current.

4. Each single phase feeder consists of four wires including a neutral wire and a street lighting wire.

The main wires have a cross sectional area of 16 or 35 sq. mm., while the neutral and lighting wires have a cross section of 16 sq. mm., which is the smallest available.

5. Lighter poles are used in the single phase case. The reduction in weight and cost - as compared with three phase poles - is function of the reduction in tension.

Cost estimation :

The cost comparison between the single phase design and the three phase design is based on a cost function which is equal to the sum of the runing cost plus a certain percentage of the fixed cost. The following compenents have been included into the estimation of the cost function.

1. Material; conductors, insulators, fixtures, poles, lamps, switches, earthing rods.
   - secondary distribution transformers
   - difference in cost of single phase and three phase motors.

2. Labor : construction costs, mantainence costs and overhead.
3. Energy loss : Cost of losses in the transformer and feeders.

The cost of switchgear and metering devices - other than those included in the transformer substation - is not included in the comparison.

Computation of the voltage drops and energy losses :

The voltage drop in each section of the feeder is computed on the assumption that the total load on this section is concentrated at its end. Only at the terminal sections, the load is assumed to be concentrated at the middle of the section.

The power losses in a feeder section is also computed on the assumption that the total load is concentrated at its end. In the terminal sections, the load is assumed to be concentrated at a distance equal to one third of the feeder length away from its beginning.

The ohmic losses in the secondary distribution transformer are added to the sum of the losses in the

11 KV line and the result is multiplied by a loss factor. The loss factor is assumed to be constant all over the system and its value is based on typical load curves. The constant losses in the transformer are added to the final result.

Computation of short circuit currents :

In the three phase design, a symmetrical three phase fault is assumed to occur at the low voltage side of the 11000/380-220 transformer. The low voltage side of the 66000/11000 rural substation is taken as an infinite bus bar so that the short current is limited by the impedance of the 11 KV feeder and that of the secondary distribution transformer.

In the single phase design, where the village is assumed to be fed by three wire, three phase 11 KV feeder, the severest fault on the low voltage side of the secondary distribution transformer is that between the two live conductors. As reflected on the three phase 11 KV side, this is a line to line fault through an impedance, which is that of the transformer. If the fault occurs between phases b and c refered to the 11 KV side, then,

$$I_a = 0$$

$$I_b = -I_c = \frac{-j\sqrt{3}\ E_g}{Z_1+Z_2+Z_T}$$

where E_g is the positive sequence voltage at the low voltage side of the rural substation, Z_1 and Z_2 are the positive and negative sequence impedances of the 11 KV feeder and Z_T is the transformer impedance refered to the 11 KV side.

At the location of the fault, the voltages refered to the high voltage side are given by

$$V_b = -E_g \quad \frac{Z_T/2 + j\sqrt{3}\,Z_T/2 + Z_2}{Z_1 + Z_2 + Z_T}$$

$$V_c = -E_g \quad \frac{Z_T/2 - j\sqrt{3}\,Z_T/2 + Z_2}{Z_1 + Z_2 + Z_T}$$

The rating of a circuit breaker located on the 440-220 V side is given by (assuming $V_c > V_b$)

S.C. MVA = $I_c . V_c .\ K \times 10^{-6}$

where K is a doubling effect factor.

The maximum permissible duration of the short circuit current has been checked against the thermal capacity of the aluminum wires by the following formula

$$t = \left(\frac{A}{11.2\ I_k} \right)^2 \text{ seconds}$$

where A is the conductor cross section in sq. mm. and I_k is the short circuit current in K amp. on the 440-220 volt side.

C. DATA

This section summarizes the data relevant to the design of the secondary distribution network.

1. Conductors

	35 sq. mm.	16 sq. mm.
Weight per km length in kg	92	44
Cost per ton weight in L.E.	1050	1150
Effective resistance ohm/km/conductor	0.876	1.0315

Effective reactance (50 HZ) ohm/km/conductor

Single phase (2 x 35 + 2 x 16), x=0.3169

(4 x 16) x=0.3417

2. Poles

	Maximum tension Kg	Cost L.E.
Suspension 8 m		
three phase	150	38
single phase	112	34.50
Tension, 8m,		
angle 25° three phase,	350	51
single phase	290	44
angle 60° three phase,	500	62
single phase	375	52
angle 90° three phase,	750	77.5
single phase	560	64

- Cost of side arms

Pole type	Cost, L.E.
suspension	2.9
tension A25	2.9
A60	4.5
A90	5.1

Cost of insulators and brackets

Type	Cost L.E.
10 cm	0.727
8 cm	0.61

Cost of lighting bulb, arm and reflector = 3.515 L.E.

3. Transformers

Cost of pole mounted transformer substations in L.E.:

	Three Phase	Single Phase
25 KVA	1120.00	625.10
50 KVA		
63 KVA	1633.80	
75 KVA		1134.00
100 KVA	2118.90	1417.50
160 KVA	2988.30	2205.00

Electrical characteristics

	Short circuit Voltage %	No. load losses kw	Ohmic losses kw
Three phase 25 KVA	4.5		0.60
63	4.5	0.265	1.28
100	4.5	0.365	1.97
160	4.5		2.20

Single phase	25 KVA	1.9	0.50%	1.35%
	50	2.3	0.45	1.33
	75	-	0.425	1.24
	100	2.2	0.40	1.15

4. Cost function

In the calculation of the cost function, the following has been assumed

- Cost of energy = 9×10^{-3} L.E./KWH
- Depreciation and maintenance as a percentage of the initial capital expenditure = 5%
- Accepted rate of annual return = 13%.

In the computation of the fixed costs, it has been assumed that :

- Cost of engineering and supervision = 6% of the cost of labor and material.
- Cost of overhead = 10% of the cost of labor, material engineering and supervision.
- Cost of storing = 2% of the cost of material.
- Contingency = 10% of the cost of labor and material.
- Miscellaneous = 3% of the cost of labor and material.

D. STUDY CASE : EL-Kohm El-Ahmar village

1. Case considered:

- El-Kom El-Ahmar village governorate of Kaluobia
- Population: 3500 , Area : 0.11 Sq.Km.
- Electric loads:

Consumer	measuring unit	quantity measured	Installed capacity KW	coincidence factor	Design capacity KW
I.Domestic consumers					
i)Living premises	house	478	177.338	0.37	65.615
II.Municipal consumers:					
i)Mosque	Unit	3	3	1	8
ii)School	Unit	2	4	1	4
iii)Shop	Unit	1	2	1	2
III.Industrial loads:					
i)Water pump station	motor	1	13	1	13
ii)Mills with stones	motor	1	23	1	23
IV.Street lighting	Lamp	110	11	1	11
Total					126.615

- Assumed power factor = 0.9
- Design KVA = 140.68

- The primary distribution system:

  Feeding rural substation : Qaha, 66/11 KV, star/delta, 2 x 10 MVA.

  Primary feeder : 11 KV, 3 wire, 7 KM total length (4.35 KM copper 25 Sq.mm and 265 KM ASCR 35 Sq.mm).

- Voltage band

  Voltage drop in the primary distribution system and the permissible voltage drop in the secondary distribution system at full load for a maximum voltage drop of 7.5 % are given below.

Component	Voltage drop % three phase design	voltage drop % single phase design
- Voltage drop in the 11 KV feeder	7	7
- Voltage drop in the distribution transformer.		
3-ph transf.11000/380-220V	4	
or 1-ph.transf 11000/440-220V		2
- permanent build up in the transformer	5	5
- regulated build up in the transformer.	2.5	2.5
- Maximum permissible voltage drop in the secondary distribution system.	4	6
- Voltage drop at the remotest consumer	7.5	7.5
- Voltage band	15	15

2. <u>Designs Compared</u> :

<u>Design I</u>: Three phase Design

The present three phase design is shown in Fig (1) which shows the location of the transformers as well as the route of the feeders. The loading of each transformer is detailed below

i. Transformer substation 1 (Evening loads)

Denomination of consumers	measuring unit	quantity measured	Installed capacity KW
- Domestic Consumers:			
Living premises	house	181	65
- Municipal Consumers:			
School	Unit	2	2
- Industrial Consumers :			
Water supply pump station	motor	1	13
Mills-with stones	"	1	23
- Street lighting	Lamp	49	5

Maximum transformer loading = (66+2)0.37 + 36+5 = 66.16 KW

= 66.16 /0.9 = 73.5 KVA for a P.F.= 0.9

Transformer rating = 100 KVA

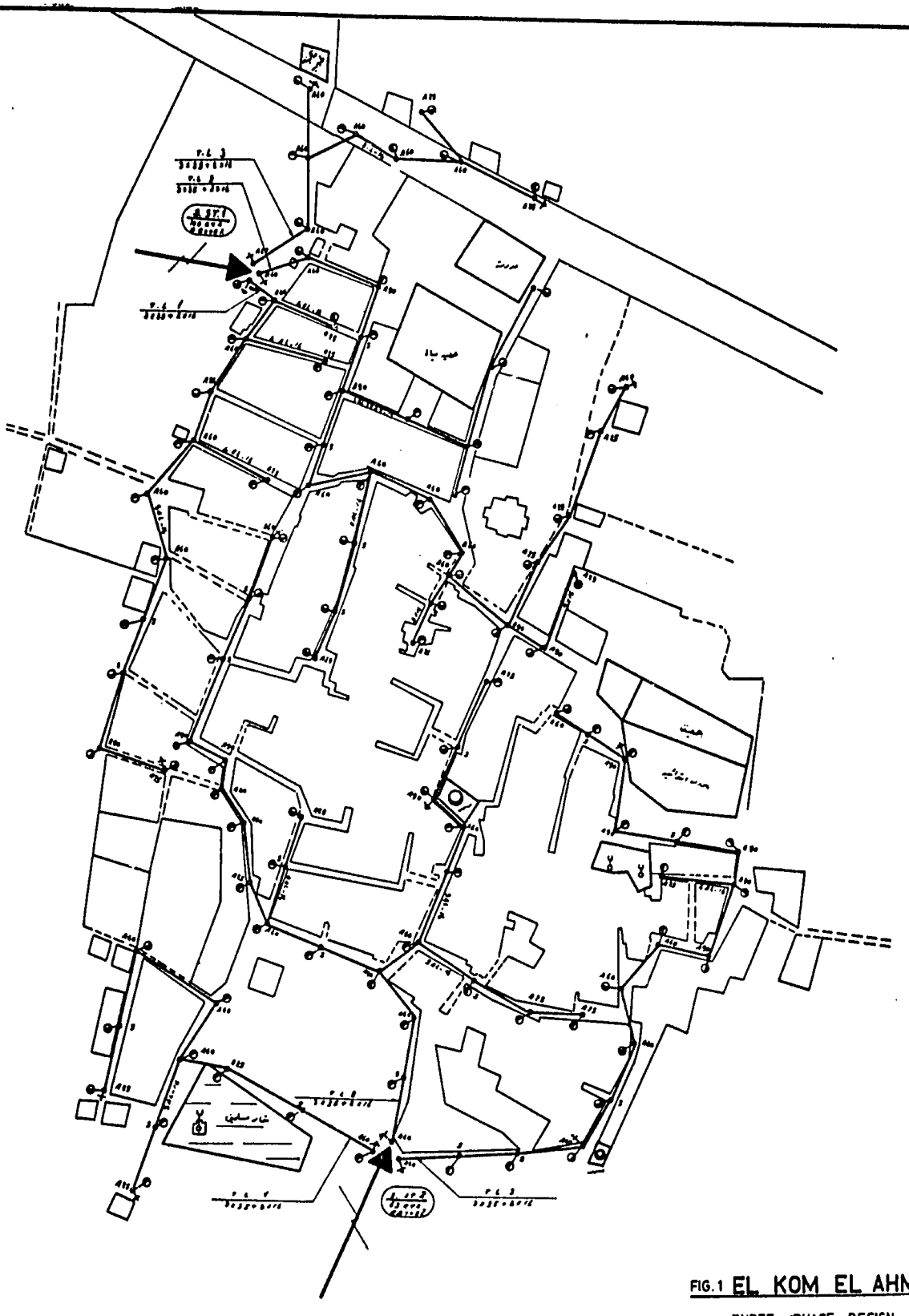

FIG. 1 EL KOM EL AHMER

THREE PHASE DESIGN

The distribution of the load on the feeders is given below:

feeder No.	no.of houses	school	water pump	mills stone
feeder 1	67	-	-	-
feeder 2	107	2 KW	13 KW	-
feeder 3	7	-	-	23 KW

ii. Transformer substation 2 : (Evening loads)

Denomination of consumers	measuring unit	quantity measured	Installed capacity KW
- Domestic Consumers			
Living premises	house	297	110
- Municipal Consumers:			
Mosque	Unit	3	8
School	"	1	2
Shop	"	1	2
- Street lighting	Lamp	46	4.6

Maximum transformer loading = (110+12)0.37 + 4.6 = 49.74 KW

= 49.74 /0.95 = 52.36 KVA a P.F.= 0.95

Transformer rating = 63 KVA

The above loads are distributed on 3-feeders as follows:

feeder no.	no.of houses	Mosque	school	shop
feeder 1	15	-	-	-
feeder 2	200	3 KW	-	-
feeder 3	83	5 KW	2 KW	2 KW

Design II: proposed 1-ph system

The proposed single phase design is shown in Fig (2) which shows the location of the single phase transformers, the routes and cross sectional areas of the feeders radiating from each transformer. The loading of each transformer is given below.

i. Transformer substation 1 : (Evening loads)

Denomination of consumers	measuring Unit	quantity measured	Installed capacity KW
- Domestic consumers :			
Living premesis	house	181	66
- Municipal consumers:			
School	Unit	1	2
- Industrial consumers:			
Water supply pump station	motor	1	13
Mills with stone	"	1	23
- Street lighting	Lamp	49	4.9

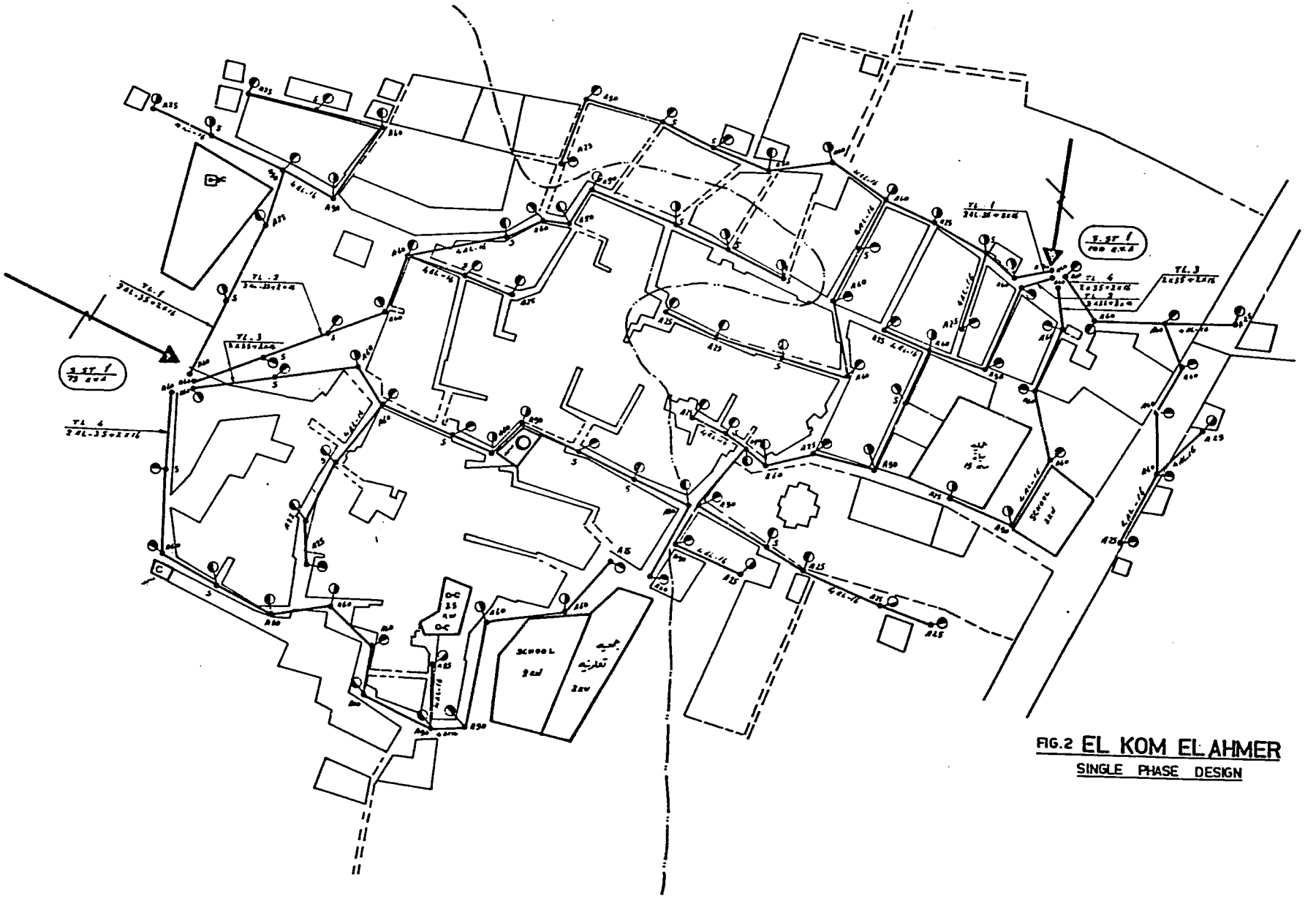

FIG.2 EL KOM EL AHMER

SINGLE PHASE DESIGN

Maximum transformer loading = (2+66) 0.37 + 36 + 4.9=66.486 KW

= 66.486/0.9 = 73.87 KVA for a P.F=0.9

Transformer rating = 100 KVA

The above loads are distributed on 4-feeders as follows:

feeder No.	No.of houses	school	water pump	mill stene
feeder (1)	102	-	-	-
feeder (2)	68	-	-	-
feeder (3)	10	2 KW	13 KW	-
feeder (4)	5	-	-	23 KW

ii. Transformer substation 2: (Evening loads)

Denomination of Consumers	measuring Unit	quantity measured	installed capacity KW
- Domestic Consumers:			
Living premesis	house	297	110
- Municipal consumers:			
Mosque	Unit	3	8
School	"	1	2
Shop	"	1	2
- Street lighting.	Lamp	50	5

Maximum transformer loading = (110+12) 0.37 + 5 = 50.34 KW

= 50.34 /0.95 = 53 KVA for a P.F.=0.95

Transformer rating = 75 KVA

- The above loads are distributed on 4-feeders as follows:

feeder no.	no.of houses	Mosaue	School	shop
feeder (1)	17	-	-	-
feeder (2)	81	-	-	-
feeder (3)	95	8 KW	-	-
feeder (4)	59	-	2 KW	2 KW

3. Results

A Summary of the main results is given below:

Item \ Design	Single phase	Three phase
1.Transformers:	100KVA,75KVA	100KVA,63KVA
2.Transformer loading S/ST 1	73.87 KVA	73.5 KVA
S/ST 2	53 KVA	52.36 KVA
3.Conductor length-16 Sq.mm AL. KM	9.74	8.798
-35 Sq.mm AL.	2.744	4.647
4.Number of poles -Suspension	22	24
-tension 25°	26	24
60°	38	40
90°	19	15
Total no.of poles	105	103

5. Max voltage drop for S/ST1,%	2.7225	3.72
S/ST2,%	3.58	3.68
6. Short circuit level:		
i)S.C.currenton H.V.side, Amp		
- three phase fault	-	163.23
- line to line fault	491.99	-
ii)S.C. MVA- three phase fault	-	1.796
- line to line fault	7.163	-
7.Energy loss in conductors MWH - 16 Sq.mm	5.177	1.454
- 35 Sq.mm	8.579	14.66
8.Annual energy loss in conductors MWH	13.756	16.12
in transfromers	11.06	14.02
Total annual energy loss MWH	24.816	30.14
9.<u>Material cost</u> L.E.		
a) transformers 100 KVA	1417.50	2118.90
75 KVA	1134	-
63 KVA	-	1633.80
b)Conductors 35 Sq.mm	265.07	448.9
16 Sq.mm	492.844	445.179

c) poles - Suspension	748	912
- tension 25°	1144	1224
60°	1976	2480
90°	1216	1162.5
d) insulators 10 cm	18.48	33.88
8 cm	49.2	47.95
e) fixtures (side arm)	412	412
f) lamp arm and reflector	256.47	256.47
g) lamp 100 watt	12.875	12.875
h) Insulator brackets 16 Sq.mm	150.88	147.2
19 Sq.mm	48.484	89
i) Switch for street lamps	140	14
Total Material cost L.E.	8800.44	10883.37
10. <u>Labor cost</u> L.E.		
a) Foundation	1546	1546
b) poles - Suspension	237.88	150.24
- tension 25°, 60°	485.76	485.76
90°	173.85	137.25
c) Insulator brackets 19 Sq.mm	52.48	51.2
16 Sq.mm	12.88	23.66

d) fixtures (side arms)	1087.68	1087.68
e) Lamp arm & reflector	126.69	126.69
f) pole pointing	808.55	808.55
g) Conductors 35 Sq.mm	64.89	109.9
16 Sq.mm	202.98	183.35
Total labor cost L.E.	4799.64	4710.28
Total cost of material and labor L.E.	13600.08	15593.65
Cost function L.E. per annum	3501.09	4032.33

4. Detailed analysis

i. Voltage drop and power loss

The voltage drop and the power loss in the different sections of the feeders are given below.

Three phase design : 63 KVA transformer

Feeder	Section	Living premises				public load			Total rated K.W	P.F.	length m	C.S. area	. V.D. %		loss KW
		No.	installed KW	coin. factor	rated KW	installed KW	coin. factor	rated KW					in section	total	
F_1	S-A	15	5.57	0.61	3.44	-	-	-	3.44	1	105	3x16	0.53	0.53	9.41×10^{-3}
	A-B	13	4.82	0.64	3.1	-	-	-	3.1	1	130	3x16	0.52	1.05	9.46×10^{-3}
F_2	S-A	200	74	0.37	28	3	0.8	2.4	30.4	1	85	3x35	1.45	1.45	0.2245
	A-B	75	28	0.5	14	3	0.8	2.4	16.4	1	25	3x35	0.2	1.65	1.92×10^{-2}
	B-C	40	14.8	0.5	7.4	3	0.8	2.4	9.8	1	140	3x16	1.9	3.55	0.1018
	A-D	104	38	0.45	17	-	-	-	17	1	60	3x35	0.57	2.02	4.95×10^{-2}
	D-E	60	22	0.5	11	-	-	-	11	1	205	3x35	1.23	3.25	7.09×10^{-2}
F_3	S-A	83	32	0.45	14.5	9	0.7	6.3	20.8	1	230	3x35	2.7	2.7	0.2844
	A-B	34	12.5	0.5	6.2	7.5	0.7	5.25	11.45	1	150	3x35	0.98	3.68	5.62×10^{-2}

Three phase design : 100 KVA transformer

Feeder	Section	Living premises				public load			Total rated K.W	P.F.	length m	C.S. area	V.D. %		loss KW
		No.	installed KW	coin. factor	rated KW	installed KW	coin. factor	rated KW					in section	total	
F_1	S-A	67	25	0.5	12.5	-	-	-	12.5	0.9	120	3x35	1.17	1.17	6.62×10^{-2}
	A-B	27	10.01	0.55	5.5	-	-	-	5.5	0.9	160	3x16	1.44	2.61	4.53×10^{-2}
F_2	S-A	107	40	0.45	18	2	1	2	33	0.9	120	3x35	1.6	1.6	0.4611
	A-B	10	3.71	0.67	2.5	2	1	2	17.5	0.9	145	3x35	1.74	3.34	0.1567
	A-C	88	28	0.45	15	-	-	-	15	0.9	186	3x35	2.12	3.72	0.1429
F_3	S-A	7	2.6	0.72	1.87	23	1	23	24.9	0.9	65	3x35	1.05	1.05	0.1423

Single phase design : 75 KVA transformer

Feeder	Section	Living premises				public load			Total rated K.W	P.F.	length m	C.S. area	V.D. %		loss KW
		No.	installed KW	coin. factor	rated KW	installed KW	coin. factor	rated KW					in section	total	
F_1	S-A	17	6.307	0.6	3.78	-	-	-	0.9	110	3.78	2x35	0.44	0.44	8.3×10^{-3}
	A-B	1	0.371	1	0.371	-	-	-	"	34	0.371	2x16	0.015	0.46	4.37×10^{-5}
	A-C	14	5.194	0.62	3.22	-	-	-	"	73.5	3.22	2x16	0.295	0.739	7.128×10^{-3}
F_2	S-A	81	30.05	0.37	11.12	-	-	-	"	130	11.12	2x35	1.5	1.544	8.506×10^{-2}
	A-B	25	9.27	0.55	5.1	-	-	-	"	27.5	5.1	2x16	0.175	1.72	6.69×10^{-3}
	A-C	48	17.8	0.37	6.6	-	-	-	"	102.5	6.6	"	0.84	2.39	4.16×10^{-2}
F_3	S-A	95	35.24	0.37	13	6	0.915	5.5	"	100	18.5	2x35	1.98	1.98	0.182
	A-B	32	11.87	"	4.4	-	-	-	"	91	4.4	2x16	0.5	2.5	1.64×10^{-2}
	A-C	55	20.4	"	7.6	6	0.915	5.5	"	112	13.1	2x35	1.6	3.58	6.73×10^{-2}
F_4	S-A	59	21.89	"	8.1	3.5	0.9	3.15	"	260	11.24	"	3.12	3.12	0.1738
	A-B	6	2.226	0.74	1.65	3.5	0.9	3.15	"	20	4.79	2x16	0.12	3.24	4.304×10^{-3}
	A-C	26	9.65	0.55	5.3	-	-	-	"	70	5.3	"	0.46	3.58	1.84×10^{-2}

Single phase transform : 100 KVA

Feeder	Section	Living premises				public load			Total rated K.W	P.F.	length m	C.S. area	V.D. %		loss KW
		No.	installed KW	coin. factor	rated KW	installed KW	coin. factor	rated KE					in section	total	
F_1	S-A	102	37.81	0.37	14	-	-	-	0.9	38	14	2x35	0.57	0.57	3.94×10^{-2}
	A-B	92	34.13	"	12.63	-	-	-	"	55	12.63	"	0.74	1.313	4.64×10^{-2}
	B-C	48	17.8	"	5.689	-	-	-	"	95	6.689	2x16	0.79	2.1	3.97×10^{-2}
	B-D	36	13.32	"	4.94	-	-	-	"	100	4.94	"	0.62	1.93	0.0228
F_2	S-A	68	25.23	"	9.33	-	-	-	"	90	9.33	2x35	0.899	0.899	4.14×10^{-2}
	A-B	52	19.29	"	7.138	-	-	-	"	135	7.138	"	103	1.93	3.64×10^{-2}
	B-C	11	4.08	6.6	7.26	-	-	-	"	30	7.25	2x16	0.27	2.2	1.478×10^{-2}
	B-D	18	6.68	5.9	2.47	-	-	-	"	37	2.47	2x35	0.098	2.03	1.198×10^{-3}
	D-E	7	2.597	.72	1.87	-	-	-	"	27.5	1.87	2x16	0.064	2.09	8.98×10^{-4}
	D-F	3	1.113	0.83	0.924	-	-	-	"	62.5	0.924	"	0.07	2.099	5.38×10^{-4}
F_3	S-A	10	3.71	.67	2.48	15	1	15		53	17.48	2x35	0.99	0.99	8.57×10^{-2}
	A-B	-	-	-	-	15	1	15	0.85	53.5	15	2x16	1.06	2.05	0.126
F_4	S-A	5	1.855	.75	1.39	23.	1	23	0.85	60	24.29	2x35	1.66	1.66	0.2118
	A-B	-	-	-	-	23	1	23	0.85	35	23	2x16	1.06	2.72	0.2912
	A-C	3	1.113	0.83	0.924	-	-	-	0.9	80	0.924	2x35	0.071	1.73	3.6×10^{-4}
	C-D	1	0.371	1	0.371	-	-	-	"	35	0.371	2x16	0.016	1.75	6.73×10^{-5}
	C-E	1	0.371	1	0.371	-	-	-	"	40	0.371	"	0.018	1.75	7.7×10^{-5}

ii. Cost break down

Item cost L.E. / Design	1-ph quantity	1-ph unit cost	1-ph total cost	3-ph quantity	3-ph unit cost	3-ph total cost
I. Material cost						
a) Transformers 100 KVA	1	2025x0.7	2025x0.7	1	3027x0.7	3027x0.7
75 KVA	1	1620x0.7	1620x0.7	-		
63 KVA	-			1	2334x0.7	2334x0.7
b) Conductors 35 Sq.mm	0.2524	1050/ton	265.07	0.4275	1050/ton	448.9
16 Sq.mm	0.4286	1150/ton	492.844	0.3871	1150/ton	445.18
c) poles - Suspension	22	34	748	24	38	912
- tension 25°	26	44	1144	24	51	1224
60°	38	52	1976	40	62	2480
90°	19	64	1216	15	77.5	1162.5
d) Insulators 10Cm	93	0.2	18.48	169	0.2	33.88
8Cm	328	0.15	49.2	320	0.15	47.195
e) Fixtures	103	4 av	412	103	4 av	412
f) Lamp arm and reflector	103	2.49	256.47	103	2.49	256.47
g) Lamp 100 watt	103	0.125	12.875	103	0.125	12.875
h) Insulator brackets 16 Sq.mm	328	0.46	150.88	320	0.46	147.2
19 Sq.mm	92	0.527	48.484	169	0.527	89
i) Switch for street lamps	20	7	140	20	7	140
Total material cost L.E.			8800.44			10883.37

II. Labor cost						
a) Foundation	103	15	1546	15	103	1546
b) poles - Suspenion	38	6.26	237.88	24	6.26	150.24
- tension 25°, 60°	64	7.95	485.76	64	7.95	485.76
90°	19	9.15	173.85	15	9.15	137.25
c)Insulation bracket 19Sq mm	328	0.16	52.48	320	0.16	51.2
16 Sq.mm	92	0.14	12.88	169	0.14	23.66
d)Fixtures	103	10.56	1087.68	103	10.56	1087.68
e)Lamp arm & reflector	103	1.23	126.69	103	1.23	126.69
f)pole painting	103	7.85	808.55	103	7.85	808.55
g)Conductors 35 Sq mm	2.744	23.65/KM	64.89	4.647	23.65/KM	109.9
16 Sq mm	9.74	20.84/KM	202.98	8.798	20.84/KM	183.35
Total labor cost L.E.			4799.64			4710.28

Material and Labor	13600.08	15593.65
Engin. & Supervision	816	935.62
Transportation	408	467.81
Over head	1441.61	1652.93
Stores	176	217.667
Contingency	1360	1559.36
miscelaneous	408	467.81
Total fixed cost L.E.	18,209.69	20,894.86
annual fixed cost L.E.	3277 . 744	3761 . 074
annual cost of energy loss:		
in conductors	123.804	145.08
in transformers	99.54	126.18
Total annual cost (Cost function)	3501.09	4032.33

E. STUDY CASE: Aghoor El-Kobra

1. Case considered:

- Aghoor El-kobra village, governorate of Kaluobia

population, 13000 Area : 0.4818 Sq.Km.

- Electric loads

Consumer	measuring unit	quantity measured	Installed capacity KW	Coincidence factor	Design capacity KW	notes
1. Domestic consumers:						
i) Living premises	house	2871	1065.141	0.25	266.29	
11. Municipal consumers:						
i) Mosque	Unit	7	12.8	0.8	10.24	
ii) School	"	2	5.5	0.8	3.19	
iii) Shop	"	1	2	1	2	
111. Industrial loads:						
i) Water pump	notor	2	15	1	15	day only
ii) Disel	"	1	12	1	12	
iii) Spinning factory	"	2	28	1	28	38 day, 28 night
iv) Mills 1	"	2	20	1	20	day only
2	"	2	30	1	30	day only
IV. Street lighting.	Lamp	438	43.8	1	43.8	
					365.52	

- Assumed power factor = 0.9

- Design KVA = 406

The primary distribution system :

Feeding rural substation: Qaha, 66/11 KV, star/ delta, 2 x 10 MVA.

Primary feeder: 11 KV, 3 wire 9.35 KM total length 13 KM copper 25 Sq.mm and 6.35 ASCR 35 Sq.mm)

Voltage band

The voltage drops in the primary distribution system and the permissille voltage drop in the secondary distrbution system at full load for a maximum voltage drop of 7.5% at full load are given below.

Compenent	Voltage drop % three phase design	Voltage drop % Single phase design
- Voltage drop in the 11 KV feeder	5.3	5.3
- Voltage drop in the distribution transformer -3ph,11000/380-220	4	
-1ph,11000/440-220		2
- permanent build up in the transformer	5	5
- regulated build up in the transformer	5	5
- Maximum permissible voltage drop in the secondary distribution system.	8.2	10.2
- Voltage drop at the remotest consumer	7.5	7.5
- Voltage band	1.5	1.5

2. Designs compared:

Design I Three phase design

The present three phase design is shown in Fig (3) which shows the location of the transformers, the routes and cross sectional areas of the feeders. The loading of each transformer is detailed below.

i- Transformer Substation 1:

Denomination of Consumers	measuring unit	quantity measured	Installed Capacity KW
-Domestic Consumers:			
Living premises	house	775	290
-Municipal Consumer:			
Mosque	"	2	4
School	"	1	3
-Industrial Consumer			
Mills with stones	motor	2	30 (day only)
-Street lighting	lamp	90	I

Maximum transformer loading = 297 X 0.27 + 9 = 83 KW

= = 92.22 KVA for P.F.= 0.9

Transformer rating = 100 KVA

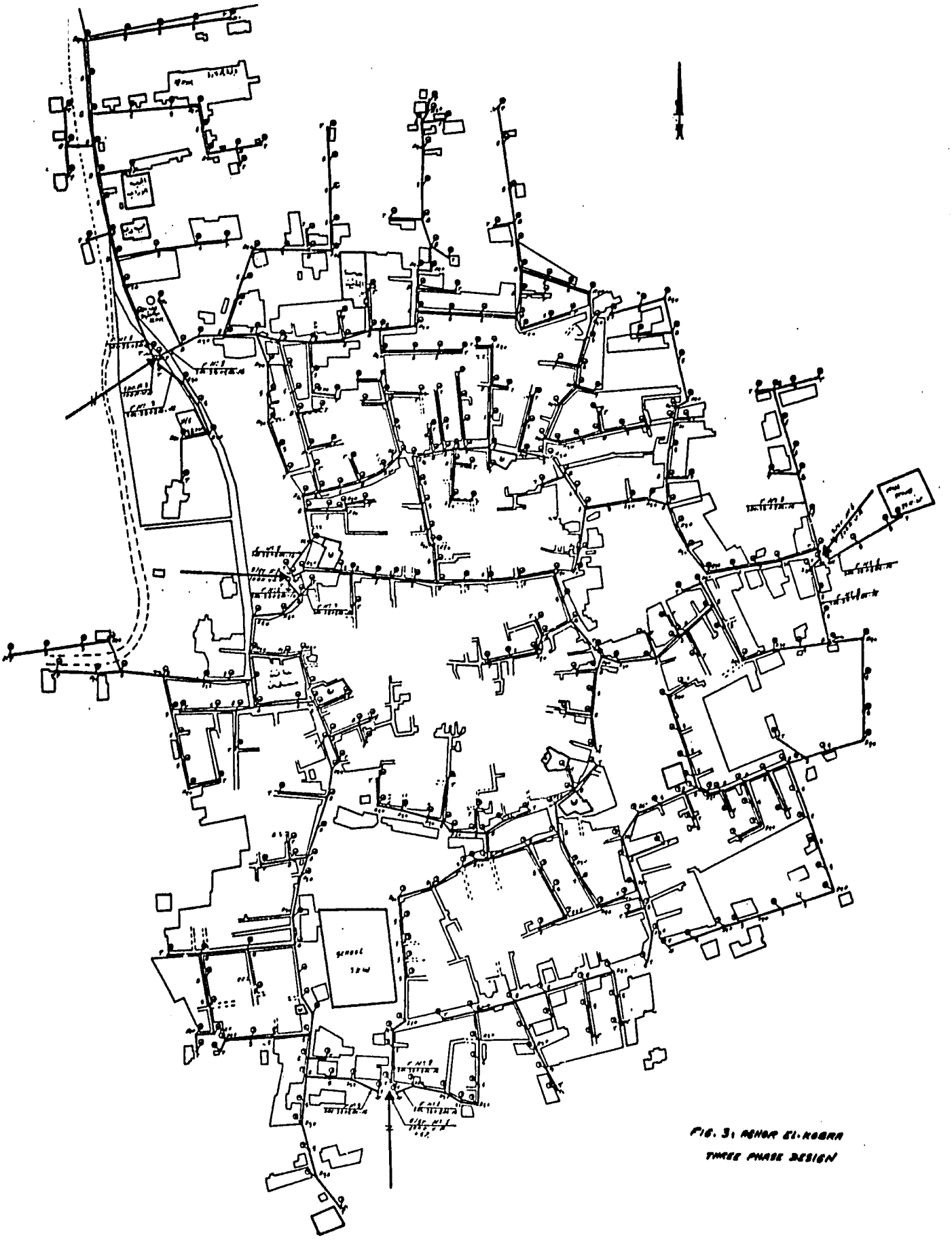

FIG. 3: ASHOR EL-KOBRA
THREE PHASE DESIGN

The above loads are distributed between 3-feeder :

feeder no.	no.of houses	Mosque	School	Mill stone
feeder(1)	115	-	-	-
feeder(2)	390	3 KW	3 KW	-
feeder(3)	290	1 KW	-	2x15 KW (day only)

ii. Transformer substation 2:

Denomination of Consumers	measuring unit	quantity measured	Installed capacity KW
- Domestic Consumers:			
Living premesis	house	900	333
- Municipal Consumer			
Mosque	unit	3	8
- Street lighting	Lamp	70	7

Maximum transformer loading = 341 x 0.27 + 7 = 99 KW

= 110 KVA. for P.F.=0.9

Transformer rating = = 100 KVA

The above loads are distributed between 3-feeders:

feeder no.	no.of houses	Mosque	School
feeder (1)	106	-	-
feeder (2)	477	4.4	-
feeder (3)	313	2.4	-

iii. Transformer substation 3:

Denomination of Consumers	measuring unit	quantity measured	Installed capacity KW
- Domestic Consumers			
Living premises	house	400	148
- Municipal Consumers:			
School	unit	1	2.5
Shop		1	2
- Industrial Consumers:			
Spinning factory	motor	2	28
Disel	motor	1	12
- Street lighting	lamp	125	12.5

Maximum transformer loading = 152.5 x 0.29 + 40 + 12.5

= 97 KW

= 108 KVA , P.F.= 0.9

Transfomer rating = 100 KVA

The above loads are distributed between 3-feeders:

feeder no.	no.of houses	school	shop	Industrial load
feeder (1)	10	-	2 KW	12 KW
feeder (2)	350	2.5 KW	-	12 KW day only
feeder (3)	2	-	-	28 KW

iv. Transformer Substation 4 :

Denomination of Consumers	measuring unit	quantity measured	Installed capacity KW
- Domestic Consumers:			
Living Consumers:	house	700	259.7
- Municipal Consumers:			
Mosque	Unit	1	2
Municipal premises	"	1	1.5
- Industrial load	motor	2	20(day only)
- Street lighting	lamp	100	10

Maximum transformer loading = (259.7 x 0.27 + 10 = 80 KW = 89 KVA

Transformer rating = 100 KVA

The above loads are distributed between 3 feeders:

feeder no.	no.of houses	mosque	municipal premises	mill stone
feeder (1)	-	-	--	20 KW day only
feeder (2)	400	-	1.5 KW	-
feeder (3)	300	2 KW	--	-

Design II proposed 1-ph. System

The proposed single phase design is shown in Fig (4) which shows the location of the single phase transformers, the routes and cross sectional areas of the feeders. The loading of each transformers is detailed below

i. Transformer Substation 1:

Denomination of consumers	measuring unit	quantity measured	Installed Capacity KW
- Domestic Consumers			
Living premesis	house	825	306
- Municipal Consumers:			
Mosque	Unit	1	1
School	"	1	3
- Street lighting	Lamp	97	9.7

Maximum transformer loading = 306 x 0.29 + 1 x 1 + 3 x0.8 + 9.7 = 100 KW

= 110 KVA for a P.F. = 0.9

Transformer rating = 100 KVA

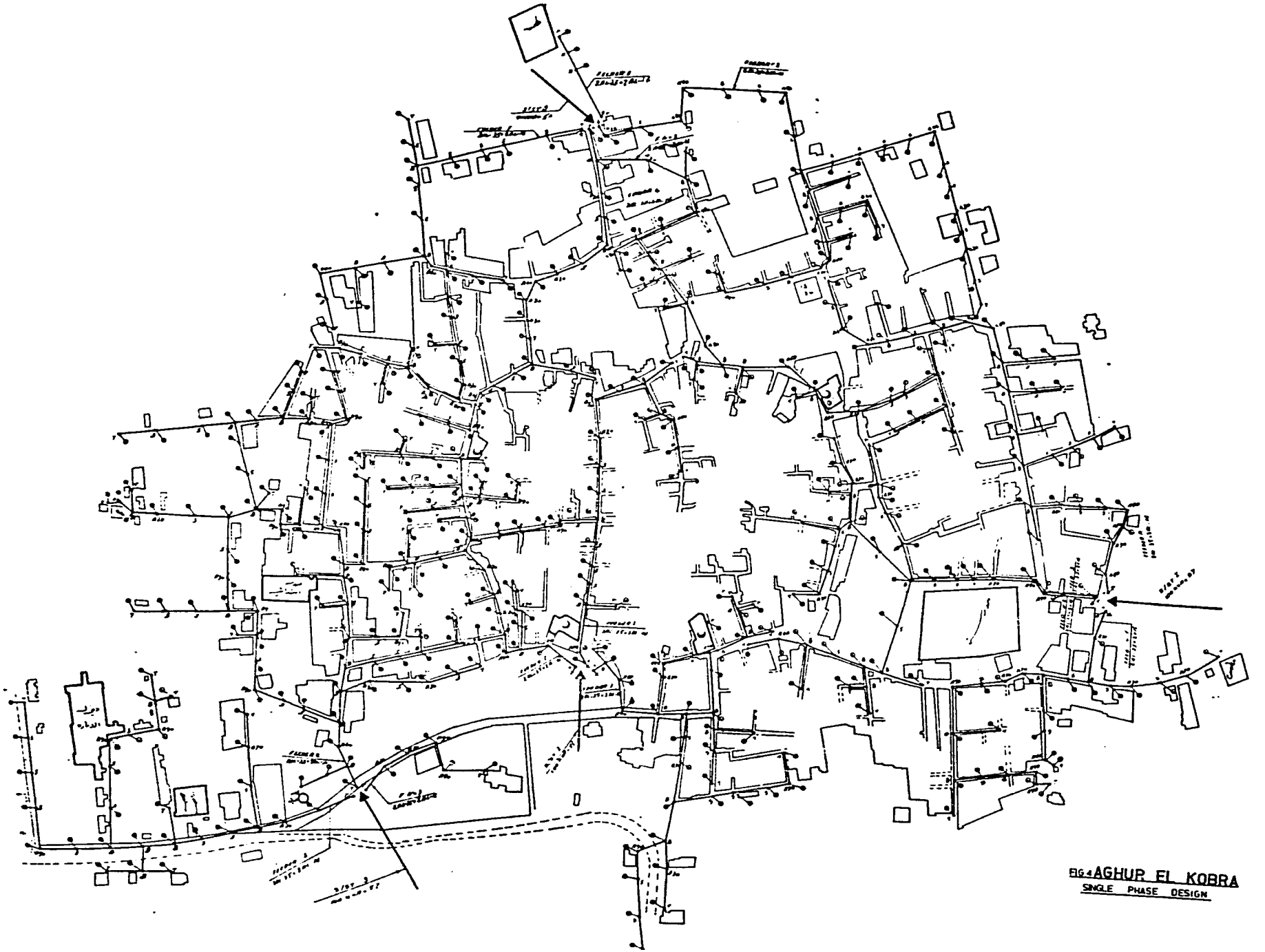

FIG.4 AGHUR EL KOBRA
SINGLE PHASE DESIGN

The above loads are distributed between 4 feeders:

feeder no.	no.of houses	mosque	school
feeder (1)	105	1 KW	
feeder (2)	280		
feeder (3)	180		3 KW
feeder (4)	215		

ii. Transformer Substation 2:

Denomination of consumers	measuring unit	quantity measured	Installed capacity KW
- Domestic Consumers			
Living premises	house	896	332
- Municipal consumers			
Mosque	Unit	3	6.8
- Street lighting	lamp	104	10.4

Maximum transformer loading = 0.29 (332 + 6.8) + 10.4

= 108.65 KW

= 114 KVA for a P.F. = 0.95

Transformer rating = 100 KVA

The above loads are distributed between 3-feeders

feeder no.	no.of houses	mosque
feeder(I)	266	2 KW
feeder(2)	314	2.4 KW
feeder(3)	313	2.4 KW

iii. Transformer substation 3

Denomination of Consumers	measuring Unit	quantity measured	Installed capacity KW
- Domestic Consumers:			
Living premises	house	300	111.3
- Municipal Consumers:			
School	Unit	1	2.5
- Industrial Consumers:			
Disel	motor	1	12
Spinning factory	motor	2	24
- Street lighting	Lamp	111	11.1

Maximum transformer loading = 111.3 x 0.37 + 2.5x0.8 + 12x1 + 28x1+11.

= 94.282 KW

= 105 KVA for a P.F.= 0.9

Transformer rating = 100 KVA

The above loads are distributed between 3 feeders:

feeder no.	no.of houses	school	shop	Spinning factory	disel
feeder (1)	10	-	2 KW	-	12 KW
feeder (2)	285	2.5 KW	-	-	-
feeder (3)	5	-	-	28 KW	-

iv. Transformer Substation 4 :

Denomination of Consumers	measuring Unit	quantity measured	Installed capacity KW
-Domestic Consumers:			
Living premises	house	850	315.35
-Municipal consumers:			
Mosque	Unit	2	5
Municipal premises	Unit	1	1.5
-Industrial Consumers:			
Mills with stones	motor	2	20(day only)
-Street lighting	Lamp	126	12.6

Maximum transformer Loading = 315.35 x 0.29 + 5x0.95 + 1.5 + 12.6

= 110 KW

= 115.5 KVA for a P.F. = 0.95

Transformer rating = 100 KVA

The above loads are distributed between 5 feeders :

feeder no.	no.of houses	mosque	municipal premises	mill stone
feeder (1)	--	-	---	20 KW day only
feeder (2)	145	-	1.5 KW	--
feeder (3)	245	3 KW	---	--
feeder (4)	240	2 KW	---	--
feeder (5)	225	-	---	--

3. Results

A summary of the main results in given below :

Item \ Design		Single phase	Three phase
1. Transformers:		4 x 100 KVA	4 x 100 KVA
2. Transformer loading	S/ST(1)	100	92.22
KVA	S/ST(2)	114	110
	S/ST(3)	105	108
	S/ST(4)	115.5	89
3. Conductors length,	Al ,16 Sq mm	21.788	22.394
KM	Al,35 Sq mm	21.788	33.591
4. Number of poles -	Suspension	132	125
	- tension 25°	41	45

60°	141	141
90°	140	150
Total no. of poles	454	461
5.Max. voltage drop for S/ST(1)%	8.85	8.3
S/ST(2)	9.1	8.2
S/ST(3)	8.21	7.9
S/ST(4)	10.3	8.565
6.Short circuit level		
i)S.C.Current on L.V.Side,Amp		
- Sym.3ph fault	-	2715.56
- line to line fault	11062.	-
ii)S.C.MVA - Sym.fault	-	1.032
- line to line fault		
7. power losses in conductors, 16 Sq mm	-	-
35 Sq mm	20.99 KW	12.308 KW
8.annual energy loss, MWH		
- Conductors	183.872	107.818
- transformers	37.19	44.67
Total	221.062	152.488

9. Material Cost		
a)Transformers L.E.	8100	12108
b)Conductors 35 Sq mm L.E	1801.6	3246.3
16 Sq mm L.E	1206.9	1133.6
c)poles - Suspension L.E	4488	4750
- tension 25° L.E	1804	2295
60° L.E	7332	8742
90° L.E	8960	11625
d)Insulators 10 Cm L.E	182.6	276.6
8 Cm L.E	135.6	138.3
e)Fixtures (Side arm) L.E	1816	1844
f)Lamp arm and reflector L.E	1130.46	1147.89
g)Lamp 100 watt L.E	56.75	57.625
h)Insulator bracket 16 mm^2	415.84	424.12
19 mm^2	481.15	728.84
i)Switch for street lamps	600	620
Total material Cost L.E	38510.9	49137.275
10. Labor Cost		
a) foundation L.E	6810	6915
b) poles -Suspension L.E	826.32	782.5
-tension 25°,60° L.E	1446.9	1478.7
90° L.E	1281	1372.5

c)Insulator bracket 19 Sq mm	149.08	221.28
16 Sq mm	126.56	129.08
d)Fixtures (Side arm)	4794.24	4868.16
e)Lamp arm & reflector	558.42	567.03
f)pole painting	3563.9	368.85
g)Conductors 35 Sq mm	515.29	794.78
16 Sq mm	446.35	466.9
Total Labor Cost L.E.	20515.06	21211.78
Total Cost of material and labor	59025.96	70349.06
11.Cost of energy loss in year cond.	1654.848	970.362
in transf.	334.71	402.03
Total annual cost of energy loss L.E.	1989.558	1372.392
Cost function L.E. perannum	16216.52	18416.56

4. Detailed analysis

i. Voltage drop and power loss

The voltage drop and power loss in the different section of the feeders are given below.

Three phase design : Transformer 1.

Feeder	Section	Living premises				Public load			Total rated K.W.	P.F.	length m	C.S. area	V.D.%		loss KW
		No.	installed KW	coin. factor	rated KW	installed KW	coin. factor	rated KW					in section	total	
F_1	S-A	115	42.7	0.45	19.2	-	-	-	19.2	1	180	AL-35	2.2	2.2	0.198
	A-B	90	33.3	0.45	15	-	-	-	15	1	140	"	1.4	3.6	0.102
F_2	S-A	340	126	0.29	36.5	3	0.8	4.8	41.3	1	180	AL-35	4.5	4.5	0.826
	A-B	320	119	0.29	34.5	3	0.8	2.4	36.9	1	100	"	2.4	6.9	0.422
	B-C	125	41.5	0.45	19	-	-	-	19	1	170/2	"	0.9	7.8	0.104
	B-D	180	64	0.37	23.8	3	0.8	2.4	26.2	1	75	"	1.2	8.1	0.14
	D-E	35	11.2	0.5	5.51	3	0.8	2.4	7.41	1	90/2	"	0.2	8.3	0.01
F_3	S-A	260	96	0.37	35.1	1	1	1	36.5	1	80	AL-35	1.8	1.8	0.298
	A-B	247	91	0.37	34.6	1	1	1	35.5	1	13.0	"	3	4.8	0.508
	B-C	155	575	0.37	21.4	-	-	-	21.4	1	200	"	2.3	7.1	
											200/2		1.2	6	
	B-D	70	26	0.45	9.7	-	-	-	9.7	1	130	"	0.8	5.6	
											130/2		0.4	5.2	
	Mill stone works day only														1.792

Three phase design: Transformer 2.

Feeder	Section	Living premises				public load			Total	P.F	length	C.S.	V.D. %		loss
		No.	installed KW	coin. factor	rated KW	installed KW	coin. factor	rated KW	rated K.W		m	area	in section	total	KW
F_1	S-A	106	39	0.45	11.6	-	-	-	17.6	1	65	AL-35	0.8	0.8	0.072
	A-B	60	22.3	0.5	11.15	-	-	-	11.2	1	100	"	0.62	1.42	0.028
	B-C	35	13	0.5	6.5	-	-	-	6.5	1	90	"	0.3	1.72	0.008
F_2	S-A	477	178	0.29	52	4.4	0.8	3.52	55.52	1	150	AL-35	4.4	4.4	0.948
	A-B	205	76	0.37	28.5	-	-	-	28.5	1	170	"	2.7	7.1	0.314
	B-C	160	60	0.37	22.2	-	-	-	22.2	1	95	"	1.1	8.2	0.094
	A-D	205	76	0.37	28.5	2	0.9	1.8	30.3	1	130	"	2.5	6.9	0.352
	D-E	160	60	0.37	22.2	2	0.9	1.8	24	1	170/2	"	1.2	8.1	0.186
F_3	S-A	313	117	0.29	34	2.4	0.8	1.92	35.92	1	115	AL-35	2.3	2.3	0.338
	A-B	225	84	0.37	31.5	2.4	0.8	1.92	33.42	1	160	"	3	5.3	0.412
	A-C	90	33.3	0.45	15	-	-	-	15	1	90	"	0.756	3.056	0.046
	C-D	75	28	0.45	12.6	-	-	-	12.6	1	110	"	0.77	3.826	0.04

Three phase design: Transformer 3.

Feeder	Section	Living premises				public load			Total rated K.W	P.F	length m	C.S area	V.D. %		loss KW
		No.	installed KW	coin. factor	rated KW	installed KW	coin. factor	rated KW					in section	total	
F_1	S-A	10	3.71	0.67	2.5	12	1	14	16.5	0.8	2.35	AL-35	3.2	3.2	0.32
						2	1								
	A-B	5	1.86	0.75	1.4	12	1	12	13.4	0.8	110	"	1.1	4.3	0.08
F_2	S-A	350	130	0.29	38	2.5	0.8	2	40	1	125	AL-35	2.8	2.8	0.46
	A-B	310	116	0.29	34	2.5	0.8	2	36	1	155	"	3	5.8	0.426
	B-C	230	88	0.37	25.5	-	-	-	25.5	1	100	"	1.4	7.2	0.144
	C-D	150	56	0.37	16.4	-	-	-	16.4	1	65	"	0.6	7.8	0.04
	C-E	40	15	0.5	7.5	-	-	-	7.5	1	390/2	"	0.7	7.9	0.028
F_3	S-A	5	1.86	0.75	1.4	28	1	28	29.4	0.8	155	AL-35	3.5	3.5	0.58

Three phase design: Transformer 4.

Feeder	Section	Living premises				public load			Total rated K.W	P.F.	length m	C.S area	V.D. %		loss KW
		No.	installed KW	coin. factor	rated KW	installed KW	coin. factor	rated KW					in section	total	
F_1				Stone mills which operate in daytime only											0.152
F_2	S-A	400	148	0.29	43	1.5	1	1.5	44.5	1	90	2.4	2.4	AL-35	0.47
	A-B	240	89	0.37	33	1.5	1	1.5	34.5	1	210	3.6	6	"	0.452
	B-C	20	7.42	0.57	4.23	-	-	-	4.23	1	300	0.6	6.6	"	0.006
											300/2	0.3	6.3		
	B-D	220	8.2	0.37	30.5	1.5	1	1.5	32	1	100	1.8	7.8	"	0.238
	D-E	100	37.1	0.45	16.8	-	-	-	16.8	1	170/2	0.765	8.565	"	0.076
	D-F	38	14	0.5	7	1.5	1	1.5	8.5	1	100/2	0.2	8	"	0.008
	A-G	210	78	0.37	29	-	-	-	29	1	150	2.3	4.7	"	0.258
F_3	S-A	300	111	0.29	32.5	2	0.9	1.8	34.3	1	120	2.15	2.15	AL-35	0.282
	A-B	280	104	0.29	30	2	0.9	1.8	31.8	1	80	1.44	3.59	"	0.19
	B-C	195	72.5	0.37	27	2	0.9	1.8	28.8	1	180	3.2	6.79	"	0.418
	B-D	60	22.21	0.45	10	-	-	-	10	1	210	1	4.59	"	0.03
											210/2	0.54	4.13		
	S-E	15	5.57	0.61	3.44	-	-	-	3.44	1	160	0.4	0.4	"	0.006
											160/2	0.2	0.2		

Single phase design: Transformer 1.

Feeder	Section	Living premises				public load			Total rated K.W	P.F.	length m	C.S. area	V.D. %		loss KW
		No.	installed KW	coin. factor	rated KW	installed KW	coin. factor	rated KW					in section	total	
F_1	S-A	105	38.95	0.37	14.4	1	1	1	15.4	1	80	AL-35	1.18	1.18	1.328
	A-B	90	33.39	"	12.3	1	1	1	13.3	1	250	"	3.19	4.37	0.086
F_2	S-A	280	103.8	0.37	38.4	-	-	-	38.4	1	180	AL-35	6.6	6.6	0.2
	A-C	125	46.3	"	17	-	-	-	17	1	195/2	"	1.55	8.16	1.184
	A-B	155	57.5	"	21.2	-	-	-	21.2	1	225/2	"	2.25	8.85	0.18
F_3	S-A	180	66.78	0.37	24.7	3	0.8	2.4	27.1	1	180	AL-35	4.69	4.69	0.33
	A-B	160	59.3	"	21.9	-	-	-	21.9	1	130	"	2.7	7.42	0.598
F_4	S-A	215	79.7	0.37	29.5	-	-	-	29.5	1	490/2	AL-35	6.6	6.6	0.274
															1.304

Single phase design : Transformer 2.

Feeder	Section	Living premises				public load			Total rated K.W	P.F.	length m	C.S. area	V.D.%		loss KW
		No.	installed KW	coin. factor	rated KW	installed KW	coin. factor	rated KW					in section	total	
F_1	S-A	266	98.6	0.37	36.5	2	0.9	1.8	38.3	1	65	AL-35	2.39	2.39	0.43
	A-B	220	81.62	0.37	30.19	2	0.9	1.8	31.99	1	100	"	3	5.39	0.44
	B-C	35	12.98	0.5	6.49	-	-	-	6.49	1	90	"	0.56	5.95	0.018
	B-D	160	60	0.37	22.2	2	0.9	1.8	24	1	185/2	"	2.135	7.525	0.362
F_2	S-A	317	117.6	0.29	34.1	2.4	0.8	1.92	36.02	1	150	AL-35	5.19	5.19	0.878
	A-B	205	76	0.37	28.14	-	-	-	28.4	1	265/2	"	3.57	8.76	0.706
	A-C	45	16.69	0.37	6.177	-	-	-	6.177	1	100	"	0.59	5.784	0.018
F_3	S-A	313	117	0.29	34	2.4	0.8	1.92	35.92	1	115	AL-35	3.97	3.97	0.67
	A-B	225	84	0.37	31.5	2.4	0.8	1.92	33.42	1	160	"	5.14	9.1	0.808
	A-C	90	33.3	0.45	15	-	-	-	15	1	90	"	1.298	5.268	0.092
	C-D	75	28	0.45	12.6	-	-	-	12.6	-	110	"	1.333	6.6	0.08

Single phase design : Transformer 3.

Feeder	Section	Living premises				public load			Total rated K.W	P.F.	length m	C.S. area	V.D. %		loss KW
		No.	installed KW	coin. factor	rated KW	installed KW	coin. factor	rated KW					in section	total	
F_1	S-A	10	3.71	0.67	2.5	12	1	14	16.5	0.8	235	AL-35	4.66	4.66	0.064 0.452
						2	1								
	A-B	5	1.86	0.75	1.4	12	1	12	13.4	0.8	110	"	1.42	6.07	0.09
F_2	S-A	285	105.7	0.37	39.12	2.5	0.8	2	41.12	1	65	AL-35	2.57	2.57	0.5
	A-B	105	38.95	"	14.4	2.5	0.8	2	16.4	1	185	"	2.9	5.47	0.222
	B-C	85	31.53	"	11.66	-	-	-	11.66	1	210	"	2.35	7.82	0.128
	C-D	30	11.13	"	4.11	-	-	-	4.11	1	100	"	0.396	8.21	0.008
	A-E	180	66.78	"	24.7	-	-	-	24.7	1	60	"	1.38	3.95	0.156
	E-F	160	59.4	"	21.96	-	-	-	21.96	1	155	"	3.27	7.22	0.336
	F-G	85	31.5	"	11.66	-	-	-	11.66	1	170/2	"	0.95	8.17	0.078
F_3	S-A	5	1.86	0.75	1.4	28	1	28	29.4	0.8	155	AL-35	4.38	4.38	0.606

Single phase design : Transformer 4.

Feeder	Section	Living premises				public load			Total rated K.W	P.F.	length m	C.S. area	V.D. %		loss KW
		No.	installed KW	coin. factor	rated KW	installed KW	coin. factor	rated KW					in section	total	
F_1		Stone mills which operate in daytime only													0.244
F_2	S-A	140	51.9	0.37	19.52	1.5	1	1.5	20.7	1	300	AL-35	5.9	5.9	0.568
	A-B	120	44.5	"	16.47	1.5	1	1.5	17.9	1	210/2	"	1.81	7.7	0.228
	A-C	20	7.42	0.57	4.23	-	-	-	4.23	1	300/2	"	0.61	6.5	0.018
F_3	S-A	245	90.89	0.37	33.6	3	0.8	2.4	36	1	600/2	AL-35	10.3	10.3	2.594
F_4	S-A	240	89	0.37	32.9	2	0.9	1.8	34.7	1	430/2	AL-35	7.17	7.17	1.754
F_5	S-A	225	83.8	0.37	30.88	-	-	-	30.88	1	160	AL-35	4.75	4.75	0.69
	A-B	210	77.91	"	28.8	-	-	-	28.8	1	120	"	3 3	8	0.444
	B-C	120	44.52	"	16.47	-	-	-	16.47	1	300/2	"	2.3	10.3	0.258

ii. <u>Cost breakdown</u>

Item cost \ Design	I- ph. design			3-ph design		
	quan-tity	unit cost	total cost	quan-tity	unit cost	total cost
1.Material						
a)Transformers 100 KVA	4	2025	8100	4	3027	12108
b)Conductors						
35 Sq mm	1.7158	1050/ton	1801.6		1050/ton	3249.3
16 Sq mm	1.04948	1150/"	1206.9		1150/ton	1133.6
c)poles						
- Suspension	132	34	4488	125	38	4750
- tension 25°	41	44	1804	45	51	2295
60°	141	52	7332	141	62	8742
90°	140	64	8960	150	77.5	11625
d)Insulators 10 Cm	913	0.2	182.6	1383	0.2	276.6
8 Cm	904	0.15	135.6	922	0.15	138.3
d)Fixtures	454	4	1816	461	4 av	1844
f)Lamp arm & reflector	454	2.49	1130.46	461	2.49	1147.89
g)Lamp 100 watt	454	0.125	56.75	461	0.125	57.625
h)Insulator bractet 16 Sq.mm	904	0.46	415.84	922	0.46	424.12
19 Sq.mm	913	0.527	481.15	1383	0.527	728.84
i)Switch for street lamps	30	20	600	31	20	620
Material			38510.9			49137.275

II.Labor cost						
a)Foundation	454	15	6810	461	15	6915
b)poles-suspension	132	6.26	826.32	125	6.26	782.5
- tension 25°,60°	182	7.95	1446.9	186	7.95	1478.7
90°	140	9.15	1281	150	9.15	1372.5
c)Insulator bracket 19 Sq.mm	913	0.16	146.08	1383	0.16	221.28
16 Sq.mm	904	0.14	126.56	923	0.14	129.08
d)Fixtures	454	10.56	4794.24	461	10.56	4868.16
e)Lamp arm & reflector	454	1.23	558.42	461	1.23	567.03
f)pole painting	454	7.85	3563.9	461	7.85	3618.85
g)Conductors						
35 Sq.mm	21.788	23.65/KM	515.29		23.65/KM	794.78
16 Sq.mm	21.418	20.84/KM	446.35		20.84/KM	466.9
Total Labor cost L.E.			20515.06			21211.78
Engineering & Supervision		3541.56			4220.94	
Transportation		1770.78			2110.47	
Overhead		6256.75			7457	
Stores		770.22			1406.98	
Contingency		5902.6			7034.91	
Miscelaneous		1770.77			2110.47	

Total fixed cost	79038.65	94689.83
annual fixed cost	14226.957	17044.169
Cost of energy loss in cond.	1654.848	970.362
Cost of energy loss in transf.	334.71	402.03
Total annual cost (Cost function)	16216.515	18416 . 561
increase in motor cost	1340.50	

F. CONCLUSIONS AND RECOMMENDATIONS

The following coclusions can be drawn from the detailed analysis of the study cases considered in the report.

1. The single phase secondary distribution system is a viable alternative for the electrification of Egyption villages fed by a single phase or three phase primary feeders.

2. By properly designing the single phase system, it can be made more economical than the three phase system. In the cases consnidered, the total annual cost of the single phase system was less than the three phase system by 9% for the small village and 13% for the large village.

3. The material cost is the dominant element in the cost of the distribution scheme. In the cases considered the cost of energy loss constituted only 7 to 15 % of the total cost function .

4. The material cost of the secondary distribution system for a village is dominated by the cost of the steel pipe poles. In the cases considered, it represented 53 to 59%

of the total material cost and 69 to 81 % of the material cost excluding transformers. The higher percentage is for the smaller village.

Because of the dense population in Egyptian villages, the pole span is mainly dependent on the street routing rather than the pole structural strength. The number of poles is almost the same for the single phase and three phase designs. If the same type of poles is used in both cases, the cost of the two distribution systems (excluding transformers) will be almost identical. The single phase system will have an advantage when lighter poles are used. In the cases considered, the saving due to the use of the lighter poles is about 10% of the total material cost.

5. The single phase system has an advantage with regard to the cost of transformers. In the cases considered transformers contributed from 21 to 32 % of the total material cost and the cost of single phase transformers was about one third less than that of the three phase transformers.

6. The cost of conductors is about the same in the single phase and three phase systems. This is mainly due to the smaller voltage drop in the single phase transformers which partially compensates the increased voltage drop in the conductors and obviates the necessity for using heavier conductors. In the cases considered, the cost of conductors was less than 10% of the total mateial cost.

7. Short circuit levels in the single phase distribution system are substantially higher than the corresponding values in the three phase system. In the villages considered, and for a fault on the low voltage side of the transformer, the single phase short circuit MVA was more than three times that of the three phase system. This is mainly due to the smaller impedance of the single phase transformers.

RECOMMENDATIONS

1. Single phase secondary distribution schemes should be considered as a viable alternative for the electrification of Egyptian villages. This is particularly true for villages with no heavy industrial loads.

2. Design charts for single phase and three phase village distribution systems should be prepared. They should facilitate the choice of the number of phases, number and location of transformers, maximum economical length of feeders and conductors cross sectional areas.

3. Light poles should be developed for the use in single phase networks.

SINGLE PHASE VERSUS THREE PHASE IN RURAL DISTRIBUTION SYSTEMS

SECTION II

MEDIUM VOLTAGE DISTRIBUTION SYSTEMS

A. INTRODUCTION

In the present rural distribution system in Egypt, bulk power is distributed through a 66 KV (33 KV in upper Egypt), double circuit subtransmission system feeding into a double 66 KV bus (or 33 KV) at the rural substation where it is stepped down to 11 KV through two individually fed power transformers which are usually delta/star connected. Each rural substation serves a residential and irrigation load ranging from 10 to 40 MVA through 3 wire radial 11 KV overhead feeders runing for a maximum of 15-20 km. Villages are fed at 380/220 volts through pole mounted three phase transformers. Irrigation motors are invariably three phase.

The alternative distribution system which is under consideration is the single phase 440/220 V, three wire system on the secondary distribution level. On the primary distribution level, there can be one of two variants depending on the availability of the neutral wire. In the first variant 3 phase, 3 wire 11 KV feeders radiating from the rural substation will fan out to serve some or all of the villages and irrigation loads as 11 KV single phase circuit. This voltage will be stepped down to the

secondary distribution voltage of 440/220 V by means of single phase, two bushing transformers with mid tapped secondaries. In the second variant, the transformers at the rural substation would have wye connected secondaries with solidly earthed neutrals and a phase voltage of 11 KV. Primary distribution feeders will leave the substation as 3 phase, 19/11 KV, 4 wire system and fan out to serve some or all of the loads as 11 KV single phase circuit. Voltage stepping down at the load will be through single phase, single bushing 440/220 V transformers.

The object of the present work is to examine the possible adaptation of the single phase system to rural distribution systems in Egypt as exmplified by a number of study cases. Only the first variant of the primary distribution system is assumed since it can be integerated in the present three phase system more readily. A complete cost-benefit comparison between a number of three phase designs and single phase designs is conducted in each case.

This report is mostly confined to the comparison

between the primary distribution networks while the comparison between the secondary distribution networks is dealt with in another report. The methodology of the analysis and the data assumed are explained in the following sections.

Three typical rural distribution zones have been considered as study cases. They have been chosen to exmplify the different geographic conditions, load density and load requirements that exist in Egypt. The first zone lies in the Nile delta where the population density is high and the villages are very close to each other. No irrigation loads exist in this particular case. The second zone lies in upper Egypt where the population density is lower and numereous small villages are scattered on both sides of the Nile at relatively large distances from the rural substations. There are no irrigation loads in this case. The third zone, also in upper Egypt, is a confined highly populated area with a very heavy irrigation load.

B. METHODOLOGY

The basic criteria for determining the adequacy of a distribution network are (1) Voltage regulation; (2) Short circuit level and (3) reliability. For rular distribution networks the most important criterion is the voltage regulation. In the study cases considered, a number of single phase and three phase 11 KV distribution networks that meet the voltage regulation requirements have been compared cost wise.

The three phase designs considered include the present three phase system as well as improved designs that are more superior cost wise or voltage regulation wise. They could be different from the original design in the routing of the feeders and/or the cross sectional area of the conductors. Only obvious improvements have been made in the present design and exhaustive optimization is not conducted.

The single phase designs considered have the same routing as the original or the modified three phase designs. The main trunk line leaving the rural substation is assumed to be 3 wire, 3 phase. The branches feeding

the villages or irrigation loads are assumed to be fed as single phase circuits from two of the three phases of the main line. The loads are cyclically distributed on the phases to achieve a balance with major villages or irrigation loads fed from the three phases.

Cost estimation :

The cost comparison is based on a cost function which is equal to the sum of runing cost plus a certain percentage of the fixed cost. The following components have been included into the estimation of the cost function.

1. Material : conductors, insulators, fixtures, poles, secondary distribution transformers (11 KV/380-220 V three phase or 11 KV/440-220 single phase), irrigation motors.

2. Labor : Construction costs, mantainence costs, overhead,

3. Energy loss : cost of losses in the 11 KV feeders, losses in the secondary distribution transformers and losses in irrigation motors.

The following cost components have been assumed to be basicaly the same in the single phase and three phase designs and are not included in the cost function :

1. Cost of switchgear and metering devices other than those included in the transformer substation.

2. Cost of the secondary distribution network inside the villages excluding the cost of the transformers substations. Justifications are given in the report dealing with secondary distribution networks.

It has been also assumed that all designs considered have the same level of reliability.

Computation of the voltage drops :

The individual demand of villages and irrigation loads is used to find the power flow in each section of the 11 KV feeder. The latter is then reduced according to the coincidence factor which changes with the power level as can be seen from the tables given in the next section. In the three phase case, the voltage drop in each section of the feeder is computed according to the following formula

$$V.D.\ 3\ ph = \frac{I\ (R \cos \emptyset + x \sin \emptyset)\ L}{V/\sqrt{3}} \times 100\ \%$$

$$\text{where} \quad = \frac{KVA\ (R \cos \emptyset + x \sin \emptyset)\ L}{V^2} \times 10^5\ \%$$

I = line current in ampere

$\cos \emptyset$ = power factor

V = line voltage in volts

L = line length in km

R, X = line resistance and reactance in ohm/km/phase.

In the single phase case, the voltage drop was computed in one of two ways.

Approximate computation : Local balance is assumed to exist at every point of the main three phase feeder. Voltage drop in the three phase section is computed as before while the voltage drop in the single phase branches is computed by the following formula

$$V.D_{1\ ph} = \frac{2\ I\ (R \cos \emptyset + X \sin \emptyset)}{V} \times 100\ \%$$

$$= \frac{2\ (KVA)\ (R \cos \emptyset + X \sin \emptyset)}{V^2} \times 10^5\ \%$$

Exact computation : The effect of current and voltage unbalance is taken into consideration. Balanced voltages are assumed to exist at the 11 KV side of the

rural substation. Current flow in each conductor is computed in terms of the individual load demand. Coincidence factors based on currents are deduced (see next section) and are used to correct for the currents in each section of each conductor. Voltage drops in the sections are computed as a phasor quantities and are used to find the magnitude and phase of the voltages at the loads and at the different bus bars.

A standard ICL load flow computer package has been also used to compute the voltages at different bus bars in the three phase case as well as the approximate analysis of the single phase case. The package is designed for a balanced three phase system with balanced active and reactive powers. The latter condition is not satisfied in the cases under consideration because of the coincidence factors which change with the power level. To overcome this difficulty, fictious generators were assumed to exist at the bus-bars connecting different sections of the line with the amount of generation equal to the difference in power flow into and out of the bus bars.

To use the load flow package in the analysis of the single phase system, a simulation method which is due to M. Chen, W.D. Dickson and S.H.C. Chen (IEEE Transactions on industry application, Vol. IA-9, No. 1, pp 98-104, 1973) has been used. In this method, artifical lines are added to simulate the three phase system. The magnitude of the loads are increased accordingly. The increase in load requires an added generation which is obtained by injecting power (or adding negative loads) at the bus bars so as to force the power flowing into the bus bar to be equal to the power flowing out of the bas bar. This simulation method has been shown to yields good results on voltage calculation but care must be taken in the evaluation of power losses.

Computation of the energy losses :

The power loss in each section of the 11 KV line is computed at the same power level at which the voltage drop is computed. In the exact analysis of the single phase case, the losses in each section of each conductor are computed separately.

The Ohmic losses in the secondary distribution

transformers are added to the sum of the losses in the 11 KV line and the result is multiplied by a loss factor. The loss factor is assumed to be constant all over the system and its value is based on typical load curves as shown in the following section. The constant losses in the transformers are added to the final result.

Irrigation motors :

To choose the transformers and motors for a given pumping station, three possibilities have been considered:

1. Three phase branch, three phase transformer and three phase motor.
2. Three phase branch, two single phase transformers connected in open delta and three phase motor.
3. Single phase branch, single phase transformer and single phase motor.

Comparing the three cases as well as the possible combinations of ratings inside each group, the most economical choice as a function of the pumping station rating has been established. This table is given in the next section and has been used as a guide in the design of branches feeding irrigation loads in the single phase case.

C. DATA

This section summarizes the data relevant to the design of the 11 KV network. Full details and references are given in another report.

1. Load flow

- Coincidence factors

Sum of demands KW	Equivalent Current Ampere	Coincidence Factor
upto 60	$\angle$ 3.94	1
60 - 150	3.94 - 9.84	0.73
150 - 300	9.84 - 19.68	0.67
300 - 600	19.68 - 39.37	0.60
600 - 1800	39.37 -118.10	0.57
higher than 1800	$>$ 118.10	0.53

- Loss factor = 0.5
- Power factor= 0.8 lagging

2. Conductors

- Standard conductor sizes

  35/6, 70/12, 95/15, 120/21 mm^2

  steel-cored aluminum (ASCR)

- characteristics and cost

	35/6	70/12
1. Weight per km length in kg	139	302
2. External diameter of conductor,mm	8.1	11.6
3. Cost per ton weight in L.E.	1155	1280.30
4. Effective resistance ohm/km/conductor	0.83	0.44
5. Effective reactance (50HZ) ohm/km/conductor	0.492	0.30
6. Ampicity of conductor for a temperature rise of 90°C,ampere	140	220

3. Transformers

- Cost of pole mounted transformer substations :

	Three phase	Single phase
25 KVA	1120.00	625.10 L.E
50 KVA		963.90
63 KVA	1633.80	---
75 KVA		1134.00
100 KVA	2118.90	1417.50
160 KVA	2988.30	2205.00

- electrical characteristics :

	Short circuit voltage %	No load losses KW	Ohmic losses KW
Three Phase 25 KVA	4.5		0.60
63 KVA	4.5	0.265	1.28

100 KVA	4.5	0.365	1.97
160 KVA	4.5		2.20

Single phase

25 KVA	1.9	0.50 %	1.35 %
50 KVA	2.3	0.45 %	1.33 %
75 KVA	-	0.425%	1.24 %
100 KVA	2.2	0.40 %	1.15 %

4. Poles

- Cost of poles

	Single phase	Three phase 35/6 Conductor	70/12 Con.
Suspension, 12 m	98 L.E.	122.5 L.E.	134 L.E.
Angle 30°, 12 m	110	141	188
Angle 60°, 12 m	120	155	188
Crossings, 15 m	122	159	163

- Cost of insulators

11 KV	6.2 L.E.
22 KV	7.0 L.E.

- Cost of fittings

35/6 (3 wires)	7.47 L.E./pole
70/12 (3 wires)	7.50 L.E./pole

5. Irrigation motors

	SINGLE PHASE			THREE PHASE		
	Cost, L.E.	eff. %	power factor %	cost L.E.	eff. %	power factor %
5 horse power	281.20	71	78	225.02	82	83
7.5	390.34	73	79.5	277.99	83.5	84.4
10	463.85	74	82	330.31	84.7	86
15	693.36	75	82	484.71	86	87.2
20	821.76	76.5	83	658.05	87.2	88

Motor - transformer combinations :

The most economical motor, transformer combination is as follows

Sum of motors rating	Transformer rating	Combination
upto 25 horse power	25 KVA	- Single phase motor and transformer
25 to 50 horse power	2 x 25 KVA	- three phase motor, two single phase transformers connec-ed in open delta.
50 - 80 horse power	63 KVA	- Single phase motor and transformer.

80-100 horse power	2x50 KVA	- three phase motor, two single phase transformers connected in open delta.
higher than 100 horse power	100 KVA or higher	- three phase motor, three phase transformer.

5. Cost function

In the calculation of the cost function, the following has been assumed :

- Cost of energy = 9×10^{-3} L.E./KWH
- Depreciation and maintenance as a percentage of the initial capital expenditure

  = 5 %

- accepted rate of annual return

  = 13 %

In the computation of the fixed costs, it has been assumed that :

- Cost of engineering and supervision

  = 6 % of the cost of labor and material

- Cost of overhead

= 10 % of the cost of labor, material , engineering and supervision.

- Cost of storing

  = 2 % of the cost of material.

- Contingency

  = 10 % of the cost of labor and material

- Miscellaneous

  = 3 % of the cost of labor and material.

D. STUDY CASE : QAHA

1. Case Considered :

Transmission line 3 from Qaha substation in Kalioubia governorate.

Rural substation : Qaha , 66/11 KV , 2 x 10 MVA,

4 - T.L.s out of the substation.

T.L.3

		with reserve capacity	without reserve capacity
Length (original design)	main	2.8KM (70/12ASCR)	2.8KM (70/12)
	branches	19.7KM (35/6ASCR)	23.6KM (70/12) + 2.625 Km (35/6)
Total Demand		1007 KVA	1768 KVA
Installed load		1861 KVA	3101 KVA
Sum of transformer ratings		2/30 KVA	3392 KVA

This line feeds the following loads:

Load	Installed capacity KVA	Transf. ratings KVA
Residential loads		
1) Ez.Karnok village	12	25
2) Ez. sharafa	45.4	63
3) Ez. Ramadan	18.1	25
4) Tanan	660	100,250,160,63,100
5) Ez.HBS.Siri	34.2	63
6) Kafr Ramada	158	63 , 63 , 63
7) Ez.El Arabi	41.4	63
8) Nawa	353.6	100,63,100,100
9) Ez. Barghouth	19	25
10) Khilwet Sanhara	48	63
11) El Sidd	148	63, 100
12) Gezeret El Nagdy	150	63, 100
13) Ez. Seneig	36	63
14) El Zahwyin	137.3	63 , 63 , 63
15) Kafr Taha	353	100,63,100,100
16) TahaNub	163	100, 63

Load	Installed capacity KVA	Transf. ratings KVA
17)	150	50 , 100
18)	410	250 , 160
19) Kafr Shibin	164	63 , 63 , 50
Irrigation Loads		
None	--	--

2. Designs Compared

Design I : Original 3-ph. design without reserve capacity

The route of the original 3-ph. design is indicated in the map (Fig.1) and the data of the line is shown in Fig 2. The load flow with the assumed coincidence factors is shown in Fig 3. with the D.L. closed. Figure 4 shown the negative loads required to account for the effect of the concidence factors when a load flow analysis is made.

Design II: Original 3-ph. design with reserve capacity

Same as I but with the D.L. open.

The load flow is shown in figure 5.

FIG 1

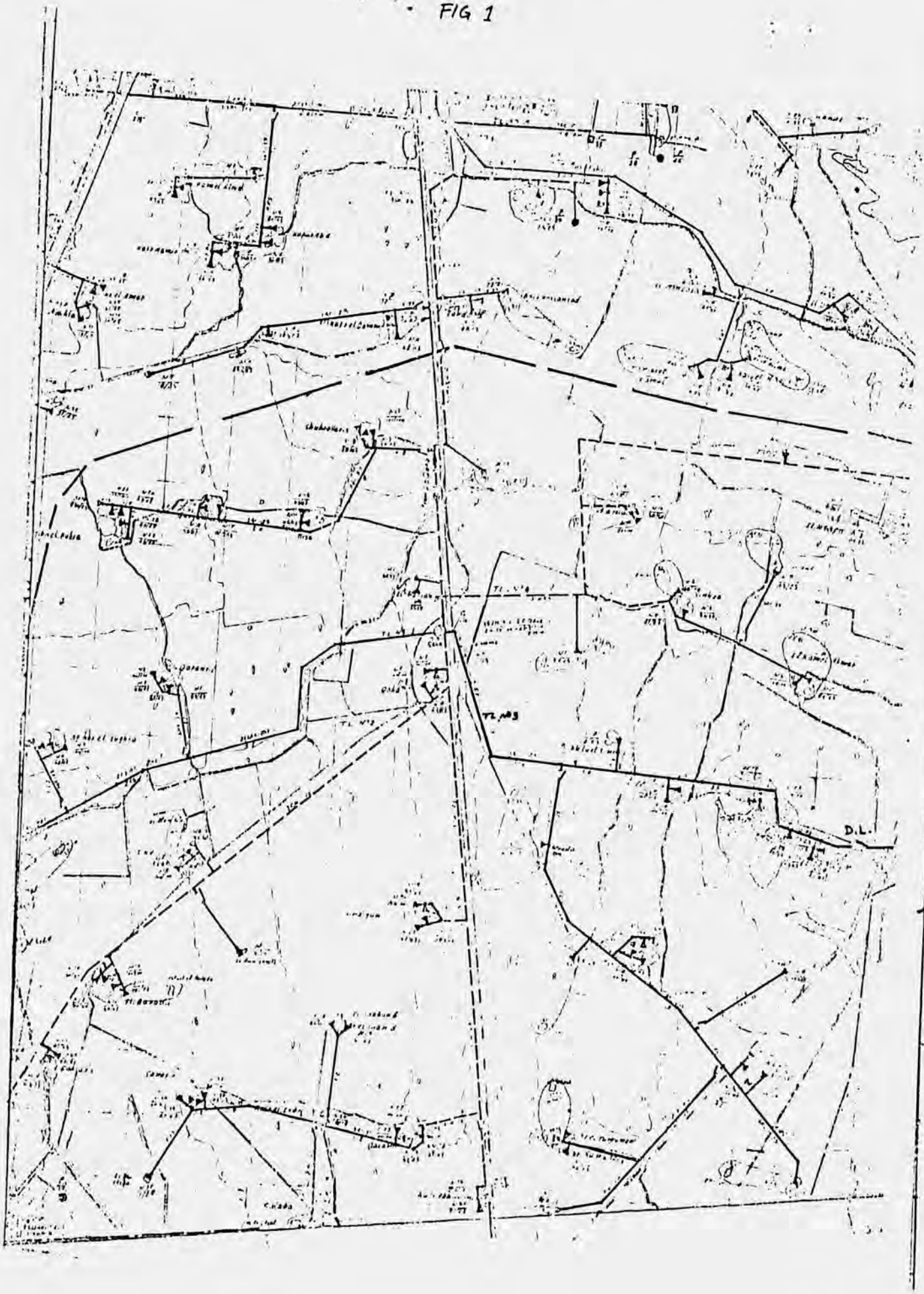

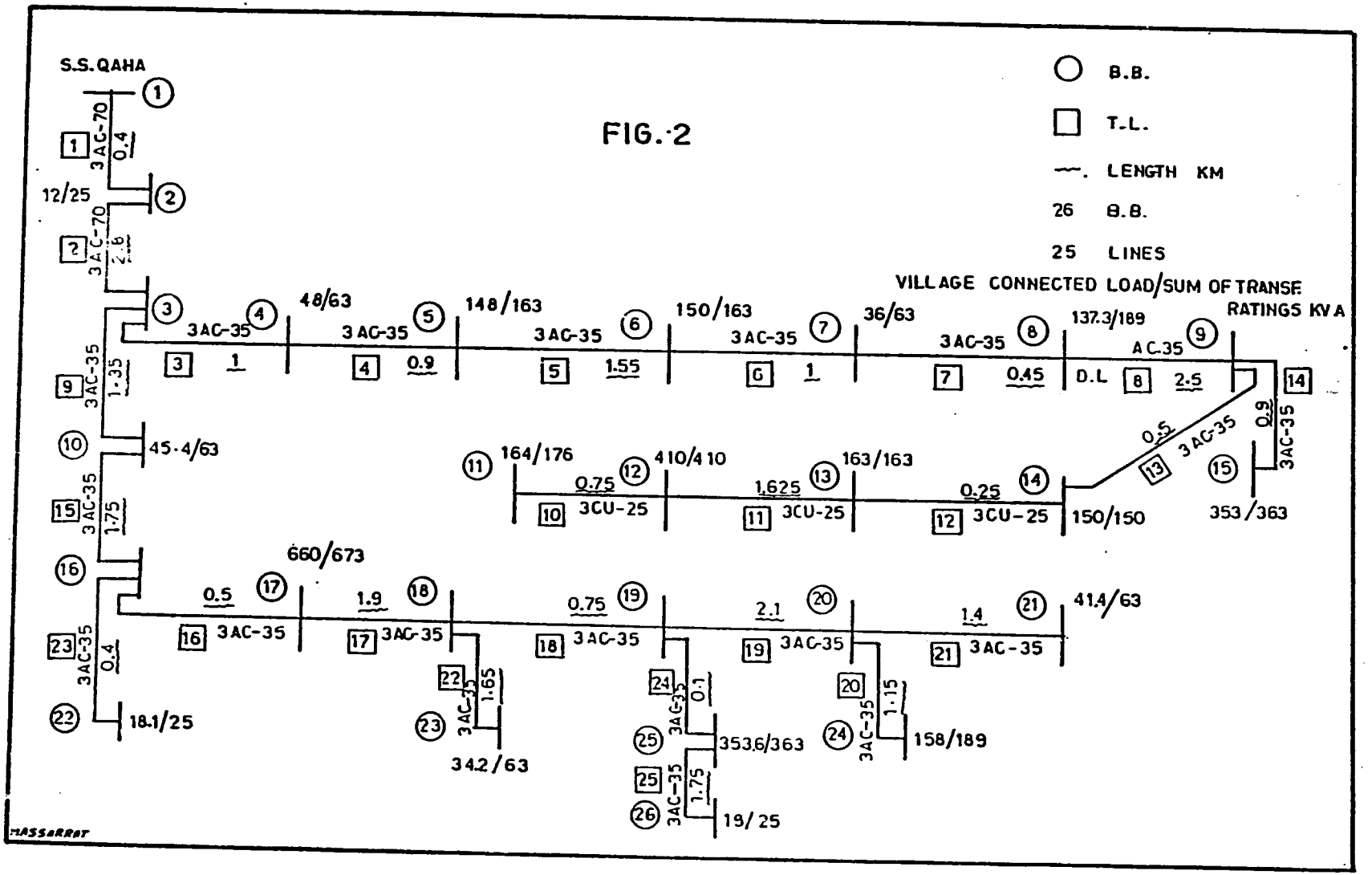
FIG.-2
B.B.
T.L.
LENGTH KM
26 B.B.
25 LINES
VILLAGE CONNECTED LOAD/SUM OF TRANSF RATINGS KVA
S.S.QAHA
12/25
48/63
148/163
150/163
36/63
137.3/189
45.4/63
164/176
410/410
163/163
150/150
353/363
660/673
41.4/63
18.1/25
34.2/63
353.6/363
158/189
19/25
3AC-70
3AC-35
3CU-25
AC-35
D.L

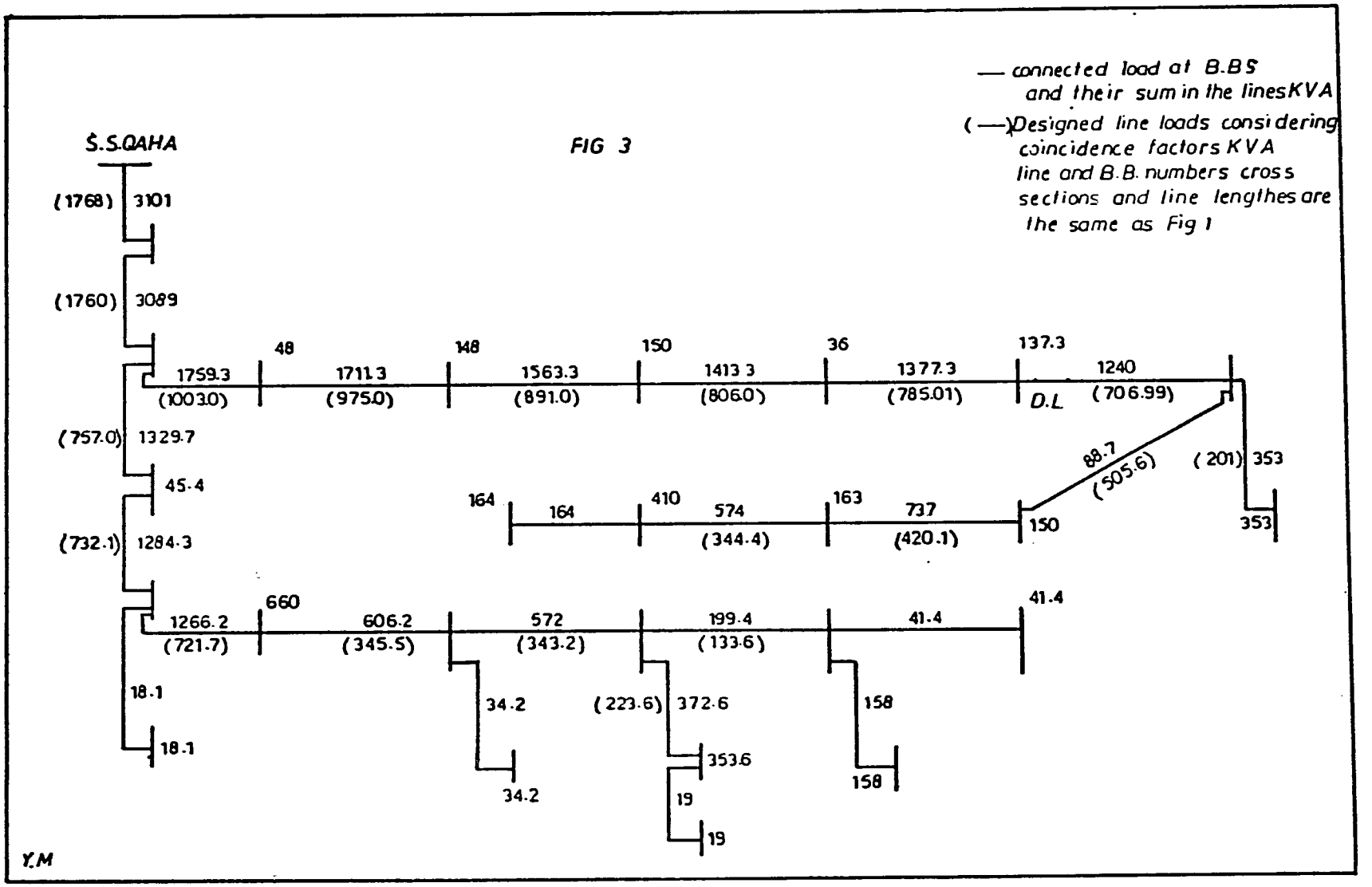
FIG 3
— connected load at B.BS and their sum in the lines KVA
(—) Designed line loads considering coincidence factors KVA line and B.B. numbers cross sections and line lengthes are the same as Fig 1
S.S.QAHA
(1768) 3101
(1760) 3089
(757.0) 1329.7
45.4
(732.1) 1284.3
18.1
18.1
1759.3
(1003.0)
48
1711.3
(975.0)
148
1563.3
(891.0)
150
1413.3
(806.0)
36
1377.3
(785.01)
137.3
D.L
1240
(706.99)
88.7
(505.6)
(201) 353
353
164
164
410
574
(344.4)
163
737
(420.1)
150
660
1266.2
(721.7)
606.2
(345.5)
572
(343.2)
199.4
(133.6)
41.4
41.4
34.2
34.2
(223.6) 372.6
353.6
19
19
158
158
Y.M

FIG - 4

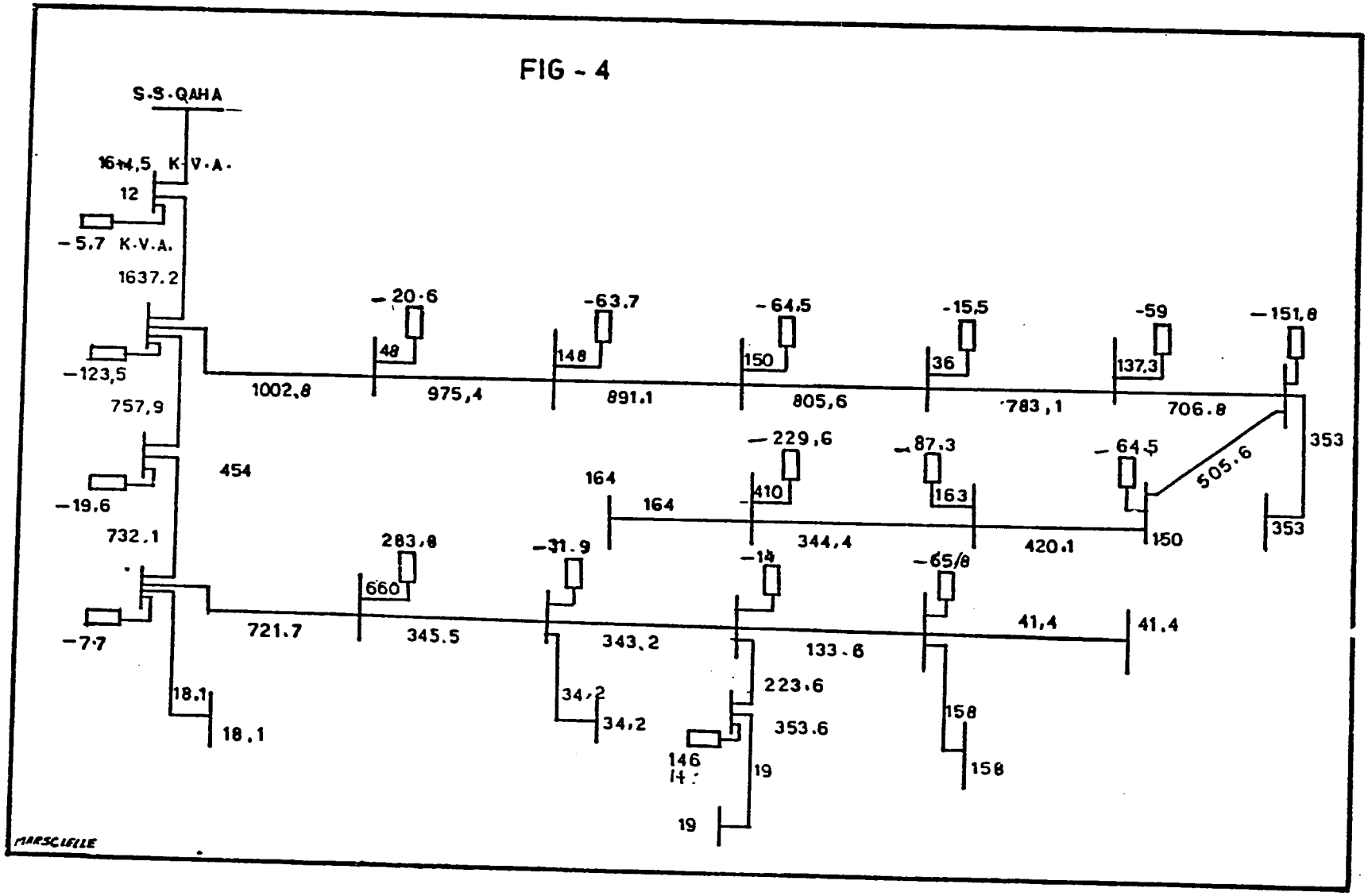
S.S.QAHA
164,5 K.V.A.
12
-5,7 K.V.A.
1637.2
-123,5
757,9
-19,6
732,1
-7,7
454
721.7
18,1
18,1
1002,8
-20,6
48
975,4
-63,7
148
891,1
-64,5
150
805,6
-15,5
36
783,1
-59
137,3
706,8
-151,8
353
353
505,6
-64,5
150
420,1
-87,3
163
344,4
-229,6
410
164
164
283,8
660
345,5
-31,9
34,2
34,2
343,2
-14
223,6
353,6
146
19
19
133,6
-65,8
158
158
41,4
41,4
MARSCHELLE

Fig. 5

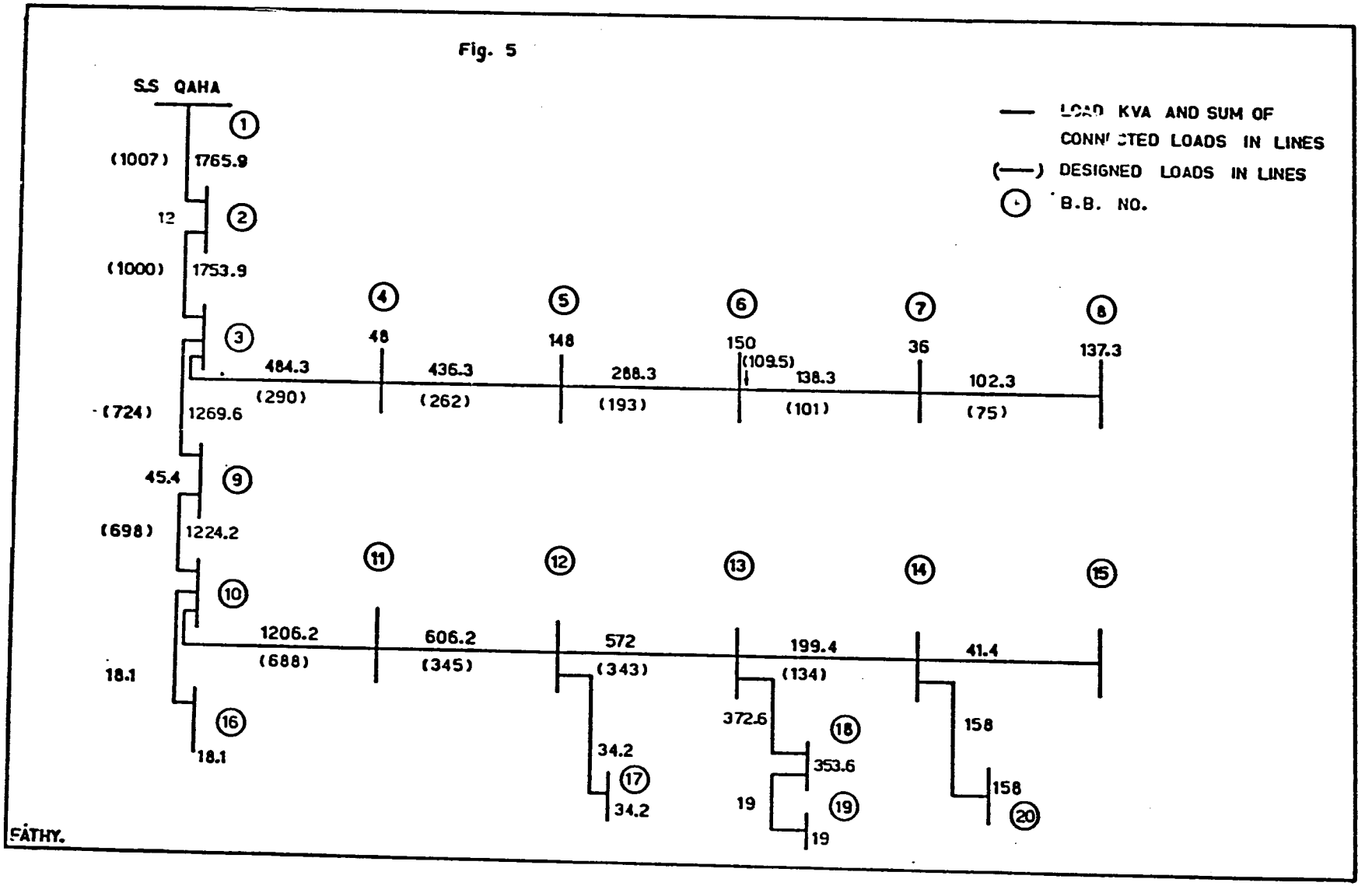
S.S QAHA
LOAD KVA AND SUM OF CONNECTED LOADS IN LINES
(—) DESIGNED LOADS IN LINES
B.B. NO.
(1007) 1765.9
12
(1000) 1753.9
(724) 1269.6
45.4
(698) 1224.2
18.1
18.1
484.3
(290)
436.3
(262)
288.3
(193)
138.3
(101)
102.3
(75)
1206.2
(688)
606.2
(345)
572
(343)
199.4
(134)
41.4
48
148
150
(109.5)
36
137.3
34.2
34.2
372.6
353.6
19
19
158
158
SATHY.

Design III: Modified 3-ph. design

The route of the 11 KV feeders has been modified as shown in Fig 6. Figure 7 shows the line cross sections, lengthes and loads after and before corecting for the coincidence factors. The ficitious negative loads to account for the diversity factor in the load flow analysis are indicated at the various B.B.'S. In this design the main line is assumed to be ASCR 70/12 mm^2 while the branches are assumed to be ASCR 35/6 mm^2.

Design IV: The same as design III but with ASCR 35/6 mm^2 conductors used for both the main feeder as well as the branches.

Design V. Single phase design

This design has the same route as that of the modified 3-ph. design. The main feeder is assumed to be 3-phase while most of the branches are single phase. The main feeder is assumed to be ASCR 70/12 mm^2 while the branches are assumed to be ASCR 35/6 mm^2 as shown

in Fig 8 which also shows the cyclic distribution of the single phase loads in the three phases.

Fig. 9 Shows the negative loads required for an approximate three phase simulation of the system.

Fig. 10 Shows the exact values of the currents in the different sections of the feeders taking unbalance into consideration and with the coincidence factors applied to the cunents.

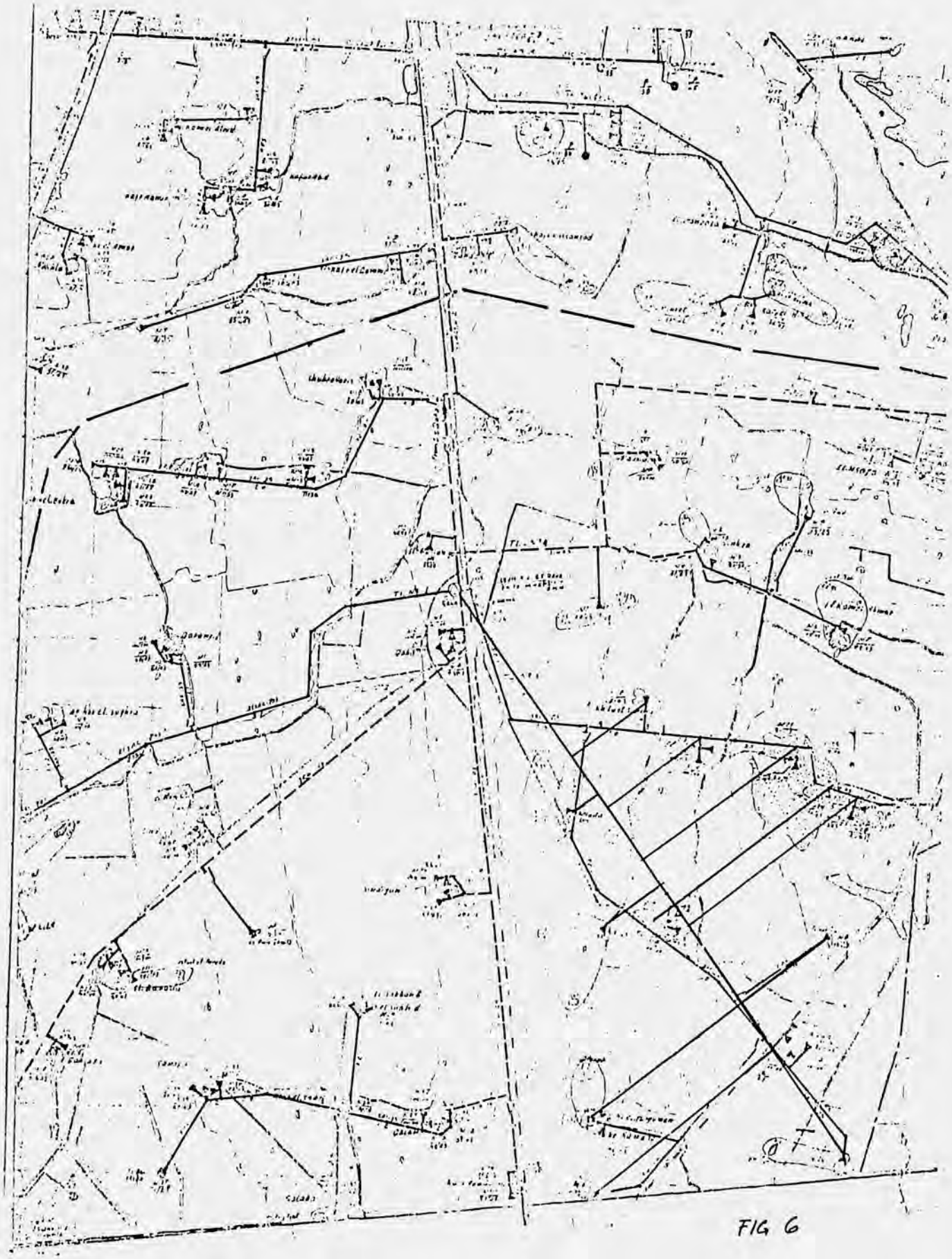

FIG 6

FIG. 7

23 B.B.
22 T.L.
FROM T.L.14 – T.L. 22
AC 70 mm²
THE OTHERS ARE AC 35mm² (—)

B.B. NUMBER
T.L. NUMBER
T.L. LENGTH
CONNECTED LOADS
DESIGN LOADS

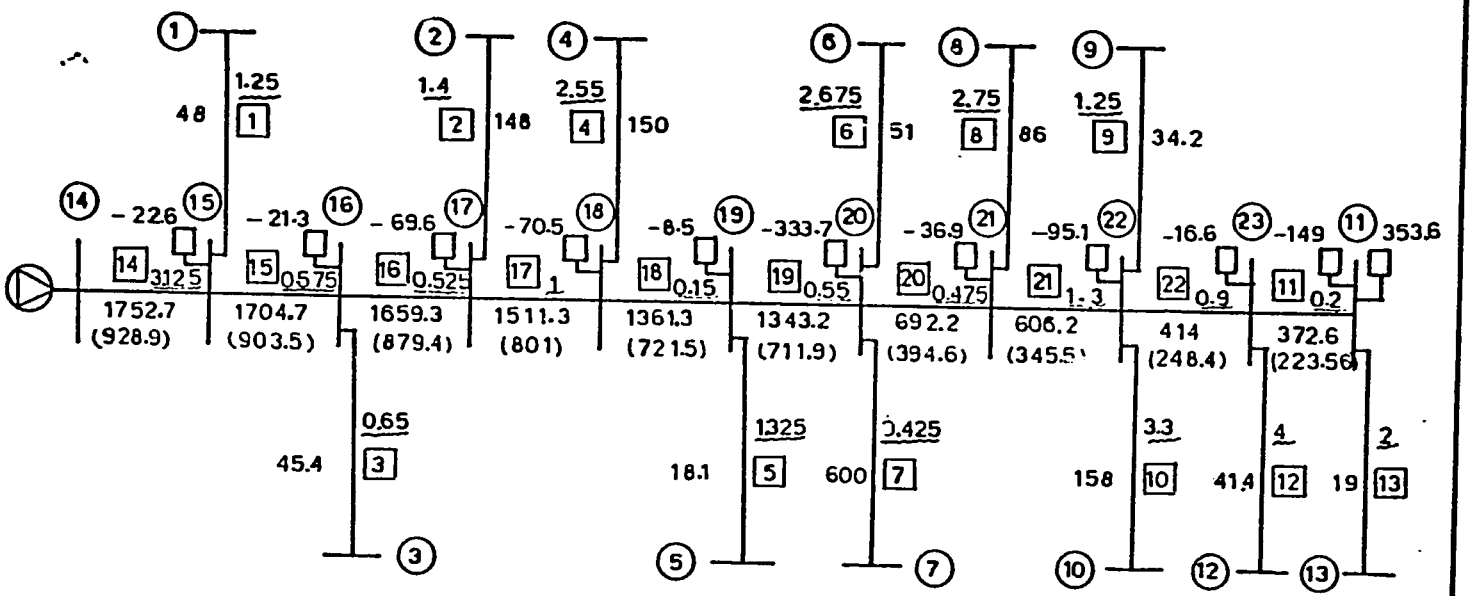

MASSARRAT

FIG 8

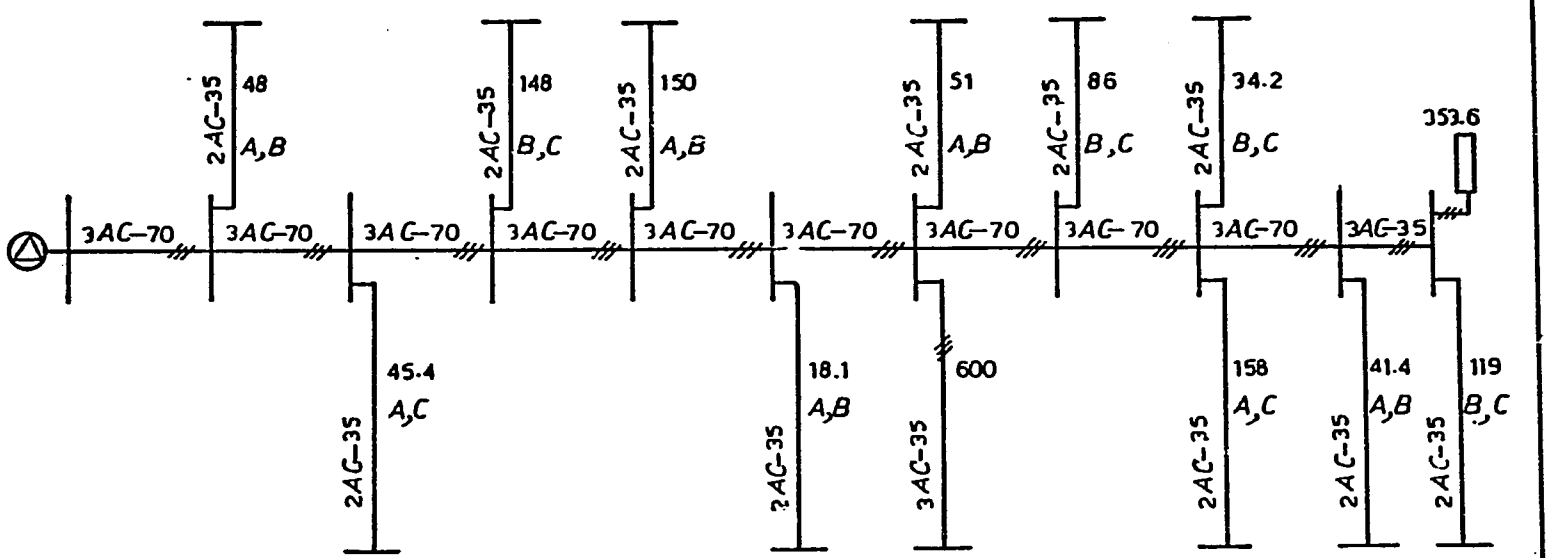
3AC-70
3AC-70
3AC-70
3AC-70
3AC-70
3AC-70
3AC-70
3AC-70
3AC-70
3AC-35
2AC-35
48
A,B
2AC-35
148
B,C
2AC-35
150
A,B
2AC-35
51
A,B
2AC-35
86
B,C
2AC-35
34.2
B,C
353.6
2AC-35
45.4
A,C
2AC-35
18.1
A,B
3AC-35
600
2AC-35
158
A,C
2AC-35
41.4
A,B
2AC-35
119
B,C

Y.M

FIG - 9

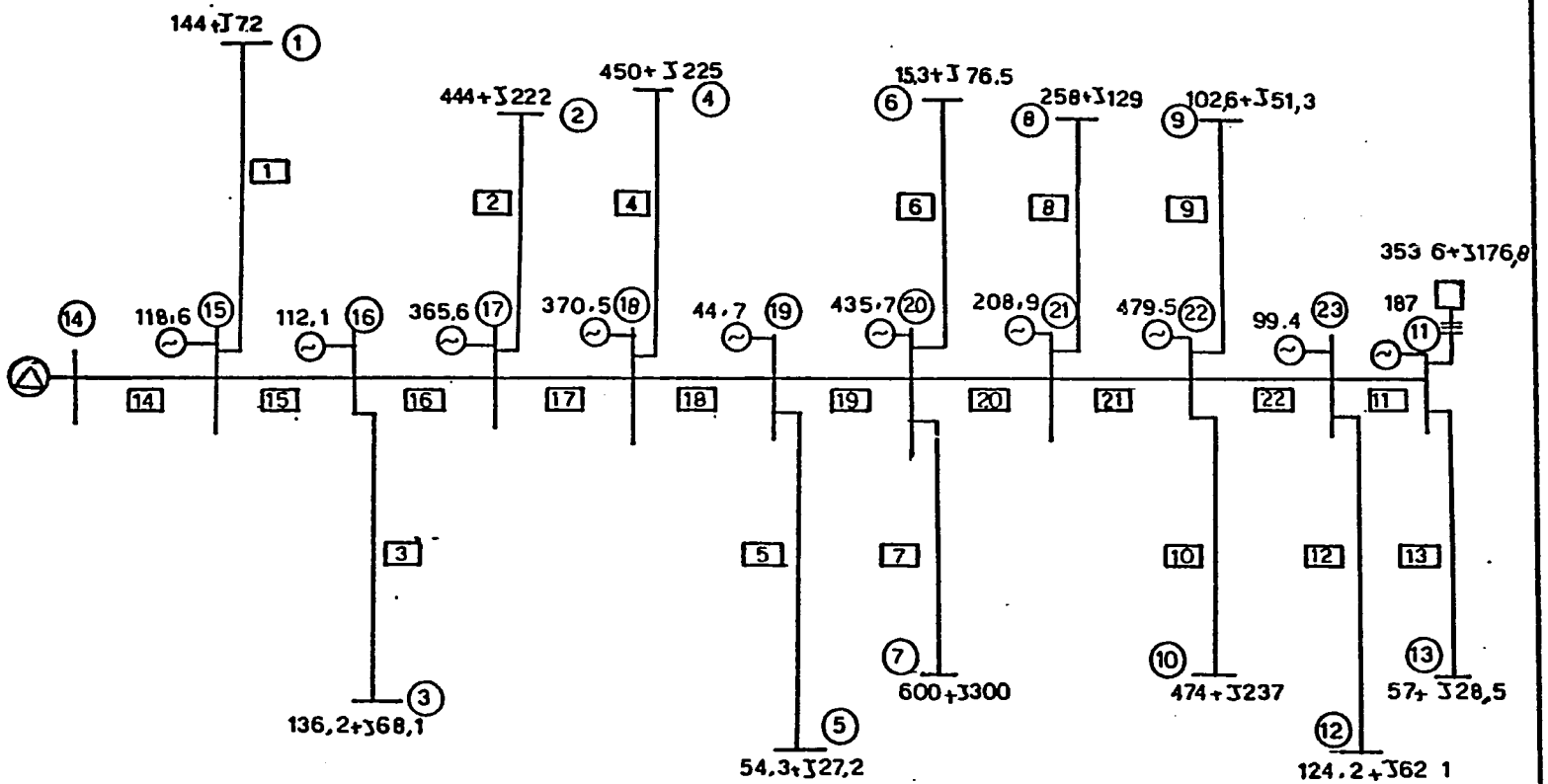

MARSCHELLE

FIG. 10

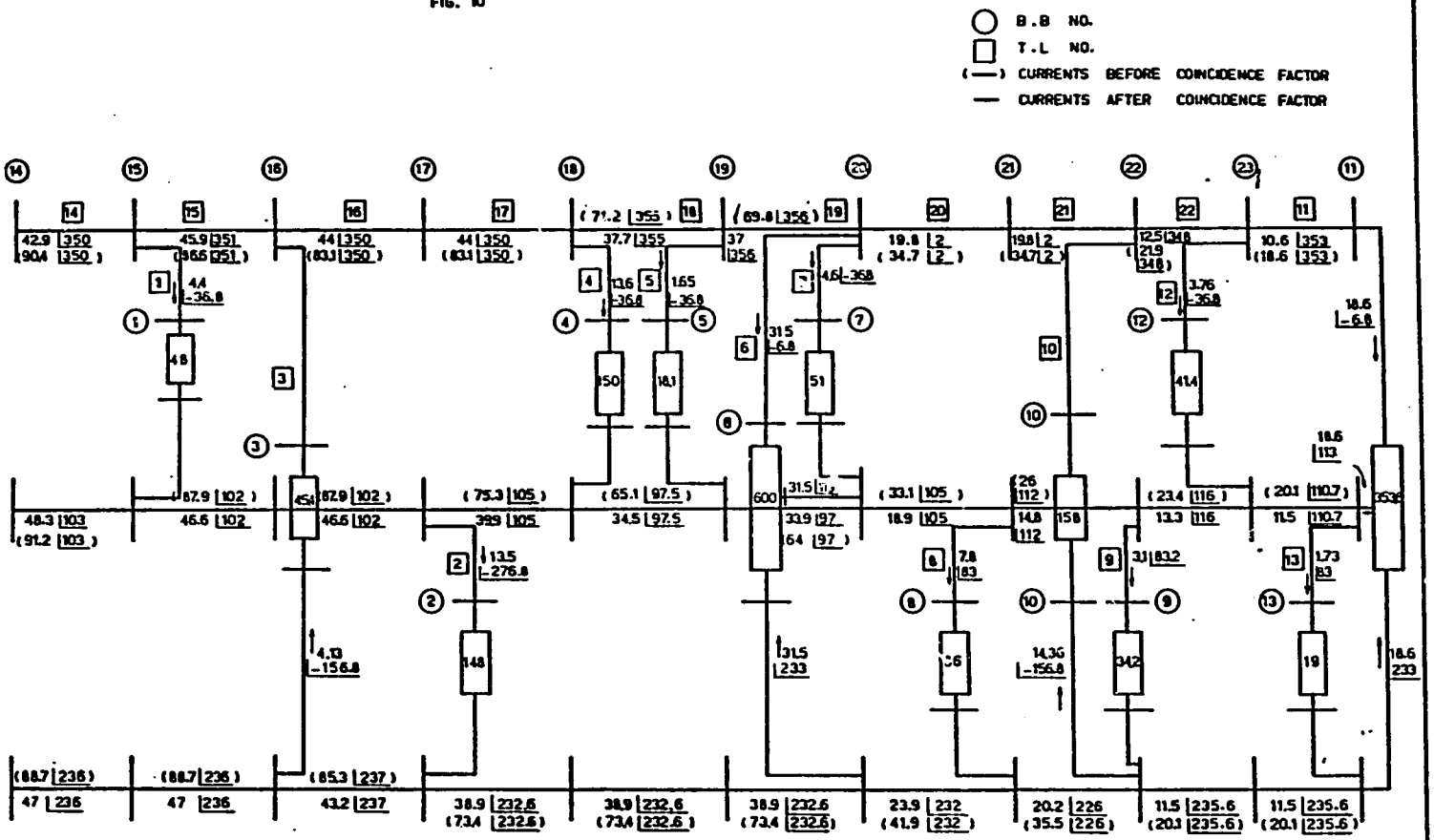
B.B NO.
T.L NO.
(—) CURRENTS BEFORE COINCIDENCE FACTOR
— CURRENTS AFTER COINCIDENCE FACTOR
VAB = 11 | 0 KV
VBC = 11 | 120 KV
VCA = 11 | 240 KV

FATHY.

3. **Results**

Item \ Design	Design I	Design II	Design III	Design IV	Design V	Design VI
1. Loads :						
- Diversified total demand KVA	1768	1007	928.9	928.9	928.9	928.9
- Total Installed load KVA	3101	1861	1752.7	1752.7	1752.7	1752.7
- Summation of transformer ratings KVA	3392	2130	2130	2130	2130	2130
2. Conductors						
- Total KM length of line with branches	87.075	67.5	97.125	97.125	73.975	73.975
- ASCR 70/12 mm^2 , KM	8.4	8.4	25.8	0	25.8	0
- ASCR 35/6 mm^2 , KM	70.8	59.1	71.325	97.123	48.175	73.975
. Cu - 25 mm^2 KM	7.875	0	0	0	0	0
3. percentage of single phase						
- Summation of loads fed as 1-ph. as a percentage of the total load	0	0	0	0	62.6%	62.6 %
- Length of 1-ph. lines as a percentage of total lenght	0	0	0	0	64.1 %	64.1 %
- percentage of (KVA.Km) 1ph /(KVA.Km) total	0	0	0	0	27.9 %	27.9 %

Item / Design	Design I	Design II	Design III	Design IV	Design V	Design VI
4. Unbalance :						
- Magnitude and location of maximum unbalance in current	0	0	0	0	2.7% at B.B.14	2.7% at B.B.14
- Magnitude and location of maximum unbalance in voltage.	0	0	0	0	0.204% at B.B.11	0.3% at B.B.11
- Magnitude and location of maximum unbalance in V.D.	0	0	0	0	8.3% at B.B.11	6% at B.B.11
5. Magnitude and location of maximum voltage drop	8.6 (3) at B.B 11 10.28% (1)	4.23% (3) at B.B.15	3.407% (3) at B.B.10 4.11% (1) at B.B.10	5.039% (3) at B.B.10	3.82% (4) at B.B.10 3.46% (5) at B.B.10 4.6% (2) at B.B.10	5.45% (4) at B.B.10 4.99% (5) at B.B.10
6. Power loss in Conductors						
i) Total Kw power loss	140 (1)	26.754 (3)	(50) (1), 24.474 (3)	35.868 (3)	32.77 (5)	43.66 (5)
ii) power loss in branches Kw	70	11.229	0.856	0.856	11.84	11.84
iii) power loss in main line Kw	70	15.525	23.618	35.012	20.93	31.82

(1) ICL load flow package with negative loads accounting for the effect of the coincidence factor.
(2) ICL load flow package applied to the single phase case with three phase simulation.
(3) Exact analysis of the three phase case.
(4) Approximate analysis of the single phase case assuming local balance.
(5) Exact analysis of the single phase case with unbalance taken into consideration.

Item / Design	Design I	Design II	Design III	Design IV	Design V	Design VI
7. Energy loss per annum						
i) Total energy loss in Conductors Kwh	613200	117182.52	107196.12	157101.84	143532.6	191230.8
ii) Energy loss in branches Kwh	306600	49183.02	3749.28	3749.28	51859.2	51859.2
iii) Energy loss in main line Kwh	306600	67999.5	103446.84	153352.56	91673.4	139371.6
iv) Energy loss in transformers		214217	214217	214217	161017.6	161017.6
8. Material						
i) Conductors KM 70/12 mm^2		27	25.8		25.8	
35/6 mm^2		58.5	71.325	97.125	48.175	73.975
ii) poles		78 (main)+176 (branches)	75 (main)+211 (branches)	286	75 (main)+211 (branches)	286
iii) Insulators and fitting		281 (main)+739 (branches)	270 (main)+886 (branches)	1156	270 (main)+591 (branches)	861
iv) Transformers number	40	27	27	27	27	27
9. Cost of material						
i) Conductor cost 70/12 mm^2 L.E.		10447.25	9973.53		9973.53	
35/6 mm^2 L.E.		9390.15	11449.52	15588.16	7733.11	11871.75
ii) pole cost		34777.32	39044.166	37934.166	33377.933	32267.933
iii) Insulators and fitting cost L.E.		8695.9	9515.61	9470.19	7207.58	7162.16
iV) Transformer cost L.E.		55307.3	55307.3	55307.3	37672.8	37672.8
Total material cost		118612.9	125290.12	118299.81	95964.953	88974.643

Item / Design	Design I	Design II	Design III	Design IV	Design V	Design VI
Total fixed cost £.E.		179972.8	190937.55	181271.89	150532.44	140866.79
annual fixed cost £.E /year		32389.7	34368.8	32628.94	27095.8	25356
annual cost of transformer energy loss L.E.		1927.95	1927.95	1927.95	1449.16	1449 . 16
annual cost of energy loss in conductors £.E.		1054.8	964.801	1413.981	1000.69	1440.41
Cost function L.E.		3[illegible]377 . 86	37261.51	35970.87	29545.68	28245.59

4. Detailed Analysis

1. Voltage at different bus bars as a percentage of nominal value

% age voltage B.B.no.	Design I	Design II	Design III	Design IV	Design V				Design VI			
					approximatly	exact			approximatly	exact		
						ph.A	ph.B	ph.c		ph.A	ph.B	ph.c
1	100	100	98.459	97.645	98.412				97.598			
2	99.61	99.79	97.838	96.748	97.67				96.58			
3	96.56	98.36	98.217	97.257	98.19				97.23			
4	95.58	98.21	97.287	95.973	96.98				95.67			
5	94.76	98.09	97.516	96.172	97.49				96.15			
6	93.42	97.89	97.204	95.75	97.07				95.62			
7	92.65	97.84	97.132	95.678	97.13				95.68			
8	92.32	97.82	97.05	95.543	96.86				95.36			
9	90.63	98.05	96.973	95.341	96.94				95			
10	95.6	97.09	(96.593)	(94.961)	(96.178)		(96.542)		(94.55)		(95.014)	
11	(89.72)	96.82	96.856	95.161	96.86	96.92/30.3	97.12/150.3	96.94/270.1	96.16	95.22/30.2	95.5/150.5	95.24/270.2
12	89.79	96.3	96.76	95.065	96.63		96.92		94.93		95.264	
13	90.31	96.1	96.826	95.131	96.8				95.1			
14	90.40	95.88	100	100	100	100/30	100 150	100/270	100	100/30	100/150	100/270
15	90.45	(95.77)	98.507	97.693	98.51	98.56/30.2	98.59 150.3	98.57 "	97.69	97.75/30.2	97.8/150.4	97.77 "

% age Voltage B.B.no.	Design I	Design II	Design III	Design IV	Design V				Design VI			
					approx-imatly	exact			approx-imatly	exact		
						ph.A	ph.B	ph.c		ph.A	ph.B	ph.c
16	94.38		98.24	97.28	98.24	98.3 /30.3	98.35/150.3	98.31/270	97.28	97.36/30.2	97.41/150.4	97.37/270
17	94.03		98.003	96.913	98	98.1 "	98.11 "	98.08 "	96.91	97.01 "	97.06 "	97.01 "
18	93.35	96.08	97.591	96.277	97.59	97.65/30.3	97.76 "	97.69 "	96.28	96.35 "	96.48/150.5	96.42 "
19	93.12	96.03	97.535	96.191	97.54	97.6 "	97.71 "	97.64 "	96.19	96.26 "	96.41 "	96.33 "
20	92.87		97.334	95.88	97.33	97.4 "	97.54 "	97.43 "	95.88	95.95 "	96.14 "	96.01 "
21	92.81		97.238	95.731	97.23	97.31 "	97.46 "	97.32/270.1	95.73	95.81 "	96.01 "	95.83 "
22	94.37		97.007	95.375	97.01	97.06 "	97.27 "	97.06 "	95.37	95.42 "	95.72 "	95.43/270.2
23	93.32		96.892	95.197	96.89	96.95 "	97.15 "	96.96 "	95.197	95.25 "	95.54 "	95.28 "
24	92.77											
25	93.09											
26	93.05											

2. power losses in different sections of the 11KV feeders in KW per conductor

losses Kw T.L.no.	Design I	Design II	Design III	Design IV	Design V			Design VI		
1			0.0066	0.0066	0.04017			0.04017		
2			0.0701	0.0701	0.42355			0.42355		
3			0.00306	0.00306	0.0184			0.0184		
4			0.1311	0.1311	0.7831			0.7831		
5			0.00099	0.00099	0.00598			0.00598		
6			0.01591	0.01591	1.05075			1.05075		
7			0.3497	0.3497	0.09395			0.09395		
8			0.04651	0.04651	0.27779			0.27779		
9			0.00334	0.00334	0.01995			0.01995		
10			0.18837	0.18837	1.12962					
11			0.02286	0.02286	ph.A. 0.01865	ph.B 0.02195	ph.c 0.02195	ph.A 0.028	ph.B 0.033	ph.c 0.033
12			0.01567	0.01567	0.09387			0.09387		
13			0.00165	0.00165	0.00993			0.00993		
14			4.0557	6.16522	ph.A 4.2479	ph.B 3.9799	ph.c 3.7685	ph.A 6.46	ph.B 6.05	ph.c 5.729
15			0.70599	1.07322	0.66154	0.66442	0.69363	1.006	1.01	1.054
16			0.6107	0.92831	0.55563	0.62323	0.58635	0.845	0.947	0.891
17			0.96502	1.46698	1.05705	0.86924	0.82621	1.607	1.321	1.256
18			0.11744	0.17853	0.11655	0.0976	0.12408	0.177	0.148	0.189
19			0.419262	0.63734	0.4107	0.34476	0.45396	0.624	0.524	0.69
20			0.111247	0.16911	0.10154	0.09252	0.14794	0.154	0.141	0.225
21			0.23341	0.35482	0.27835	0.15552	0.28971	0.423	0.236	0.44
22			0.08352	0.12696	0.07672	0.08685	0.06493	0.117	0.132	0.099

3. Detailed cost analysis

Item / Design	Design II			Design III			Design IV			Design V			Design VI		
	quantity	unit cost £.E.	total cost £.E	quantity	unit cost £.E	total cost £.E	quantity	unit cost £.E	total cost £.E	quantity	unit cost £.E	total cost £.E	quantity	unit cost £.E	total cost £.E
Material															
i) Conductors KM 70/12	27	386.65	10447.25	25.8	386.65	9973.53				25.8	386.65	9973.53			
35/6	58.5	160.545	9390.15	71.325	160.545	11449.52	97.125	160.545	15.588	48.175	160.545	7734.255	73.975	160.545	11871.75
ii) poles															
a) Tension 70/12	16	179.67	2802.8	15	179.67	2695.05				15			15		
b) Suspension 70/12	62	134	8361.6	60	134	8040				60			60		
c) Tension 35/6	70	151.67	10616.9	84	151.67	12740.28	99	151.67	15015.33	84		33372.933	84		32267.933
d) Suspension 35/6	106	122.5	12985	127	122.5	15557.5	187	122.5	22907.5	127			127		
iii) Insulutors & fitting.															
a) main	281		2690.7	270		2315.93	270		2270.51						
b) branches	739		6005.2	886		7199.68	886		7199.68			7207.58	7162.16		
iV) Transformers	27		55307.3	27		55307.3			55307.3	27		34162.8	27		34162.8
Material cost			118617.9			125290.12			118299.81			95964.953			88974.643
Labor															
i) line Km 70/12	9	113.73	1023.6	8.3	113.73	978.11				8.3	113.73	978.11			
35/6	19.5	91.224	1778.8	23.775	91.224	2168.83	32.075	91.224	2926.01	16.058		1464.88	24.358		2249.4
ii) poles 70/12 suspension	62	33.512	2091.1	60	33.512	2010.72				60	33.512	2010.72	60	33.512	2010.72
Tension	16	36.799	566	15	37.735	566.03				15	37.735	566.03	15	37.735	566.03
35/6 suspension	106	33.502	35378	127	33.502	4241.35	187	33.502	6264.87	127	33.502	4241.35	127	33.502	4241.35
Tension	70	36.81	2657	84	37.742	3185.42	99	37.742	3736.46	84	37.742	3185.42	84	37.742	3185.42
iii) Transformers	27	135.734	3664.8	27	135.734	3664.8	27		3664.8	27	135.734	36648	27	135.734	36648
Labor cost			15319.1			16815.28			16621.68			16111.33			15917.74
Material & Labor			133937			142105.4			134921.49			112076.28			104892.38

Item / Design	quan-tity	unit cost	cost	quan-tity	unit cost	cost	quan-tity	unit cost	cost	quan-tity	unit cost	cost	quan-tity	unit cost	cost
Engin.& supervision			8036.2			8526.32			8095.29			6724.58			6293.54
Transportation			4018.1			4263.16			4047.64			3362.28			3146.77
Over head			14197.3			15063.17			14301.68			11880.09			11118.59
Stores			2372.4			2505.8			2366			1919.3			1779.5
Contingency			13393.7			14210.54			13492.15			11207.63			10489.24
Miscellaneous			4018.1			4263.16			4047.64			3362.28			3146.77
Total fixed cost			179972.8			190937.55			181271.89			150532.4			140866.79
annual fixed cost			32389.7			34368.8			32628.9			27095.8			25356
cost of energy loss in transf.per year			1927.95			1927.95			1927.95			1449.16			1449.16
cost of energy loss in cond.per year			1054.8			964.801			1413.981			1000.69			1440.41
Cost function			35377.86			37261.51			35970.87			29545.7			28245.59

E. STUDY CASE : Bany Mazar

1. Case Considered

T.L. 3 From Bany Mazar substation, El-Menia governorate

Rural substation : Bany Mazar,

33 / 11 KV & 2 x 10 MVA,

7 T.L.s out of the substation

T.L. 3

Length of main line	70/12	ASCR	6.6	KM
	35/6	ASCR	6.8	KM
Length of branches	70/12	ASCR	--	
	35/6	ASCR	16	KM

Total demand = 804 KVA

Installed Load= 1410 KVA

Sum of transformer ratings = 1557 KVA

The line feeds the following loads

Village	Installed capacity KVA	Transformer ratings KVA
Residential loads		
1) Nazlet El dalil	96.8	100
2) Kafr El Shark	79.2	25 , 63

Village	Installed capacity KVA	Transformer ratings KVA
3) El farovkiga	150	63 , 100
4) Al ger	118.8	63 , 63
5) Nazet Amr	101.2	63 , 63
6) Abu Aziz	203.2	63,63,100,63,25
7) Minshat El Qusheiri	45	63
8) Nazlet Abu Hiseiba	89.2	100
9) Nazlet Abu shehata	219	63 , 63 , 100
10)	91	100
11) Nag Ali Abu Ageis	48	63
12) El sheikh Hassan	62	63
13) El Sawayta	15.6	25
<u>Inigation Loads</u>		
None	---	---

2. <u>Designs Compared</u> :

<u>Design I</u>: <u>Original 3-ph. design</u>

The route is shown is Fig 11. Fig.12 shows the line data as well as the loads in KVA before and after correcting for the coincidence factor.

Design II: The same as design I but 35/6 mm^2 ASIR conductors are used all through.

Design III: <u>Single phase design</u>

The route is the same as that of the three phase design but the loads are fed from two phases only. Figure 13 shows the exact values of the currents in the different sections of the feeder taking unbalance into consideration and with the coincidence factors applied to the currents.

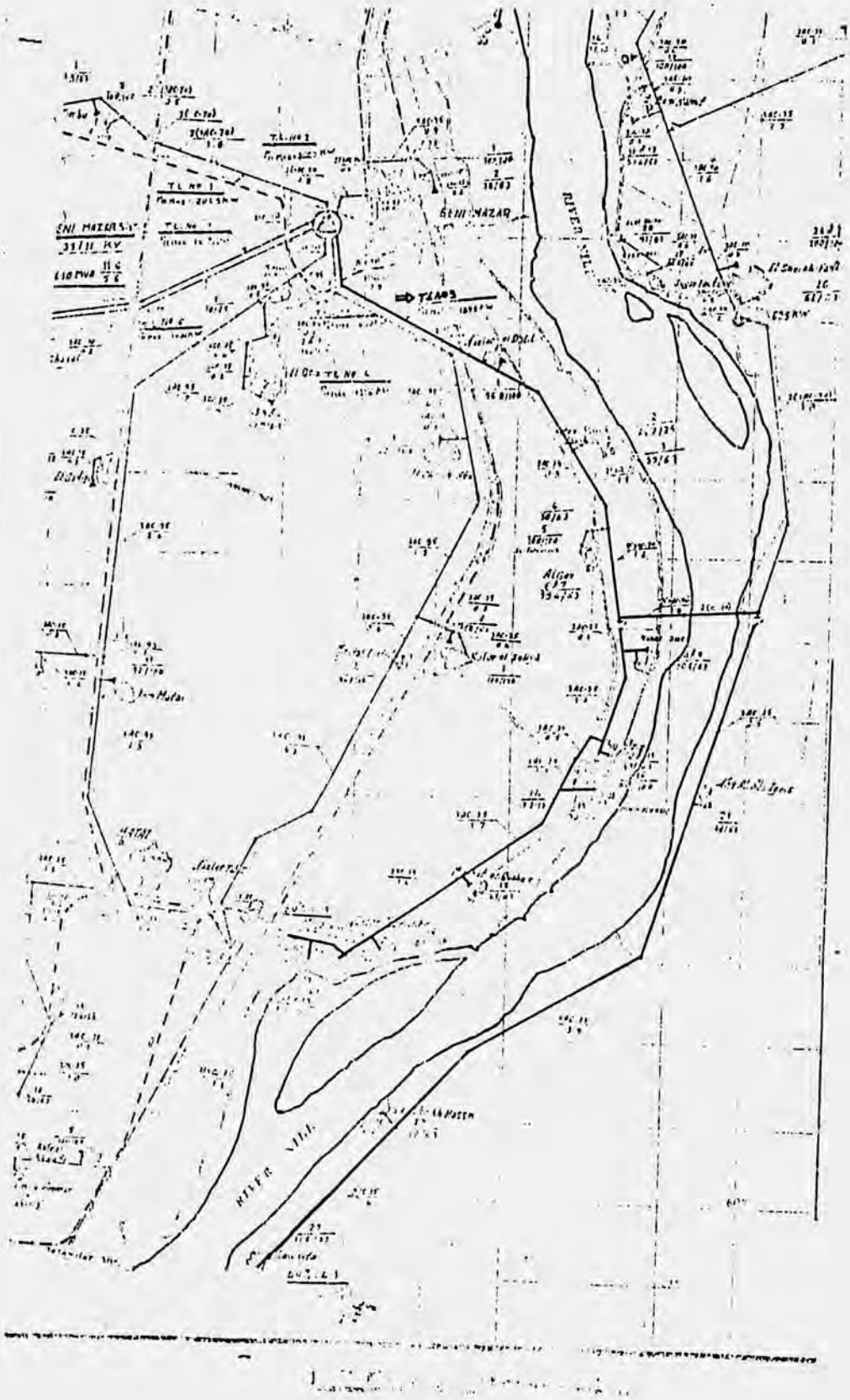

FIG 11

FIG. 12

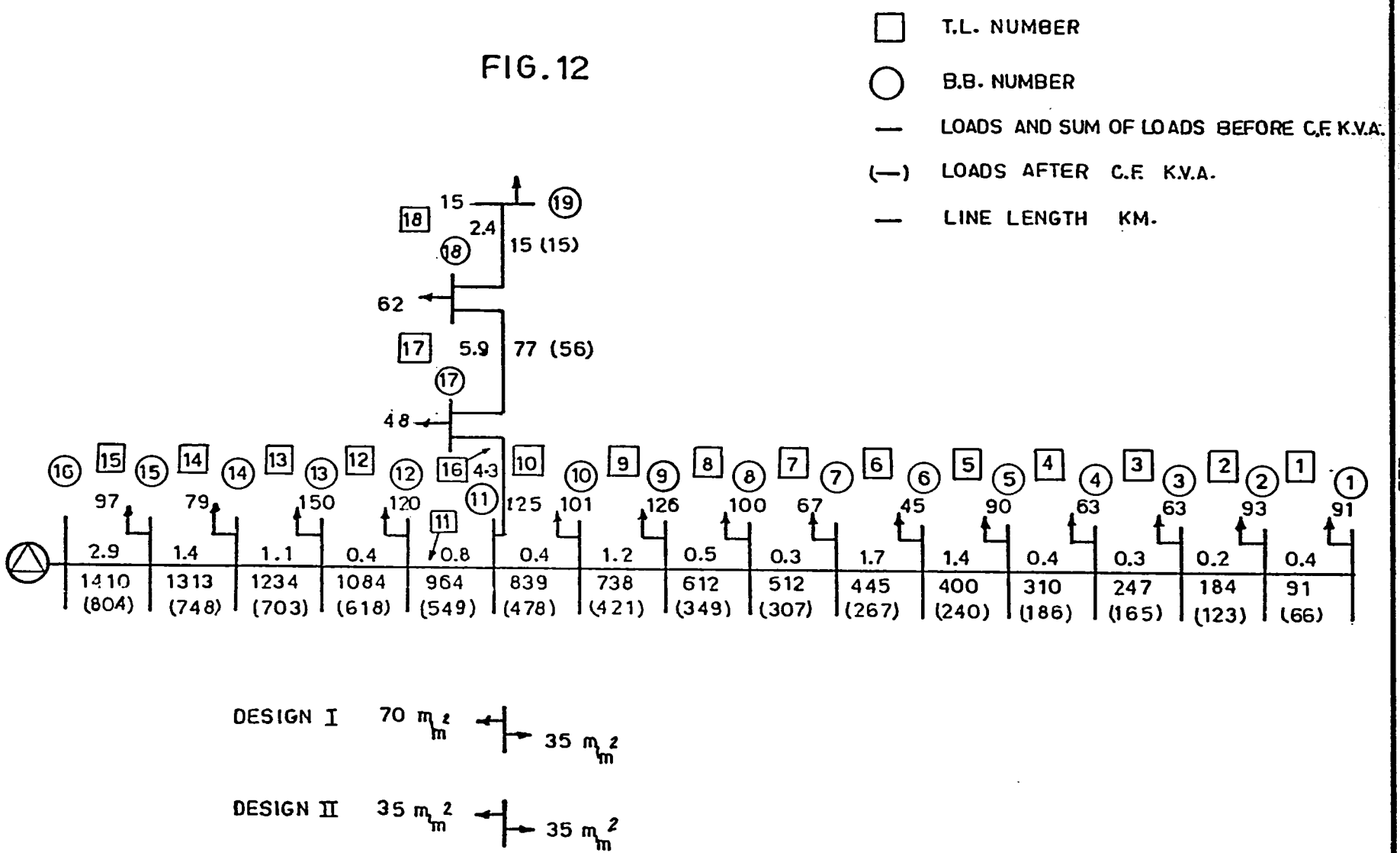

HASSARRAT

FIG 13

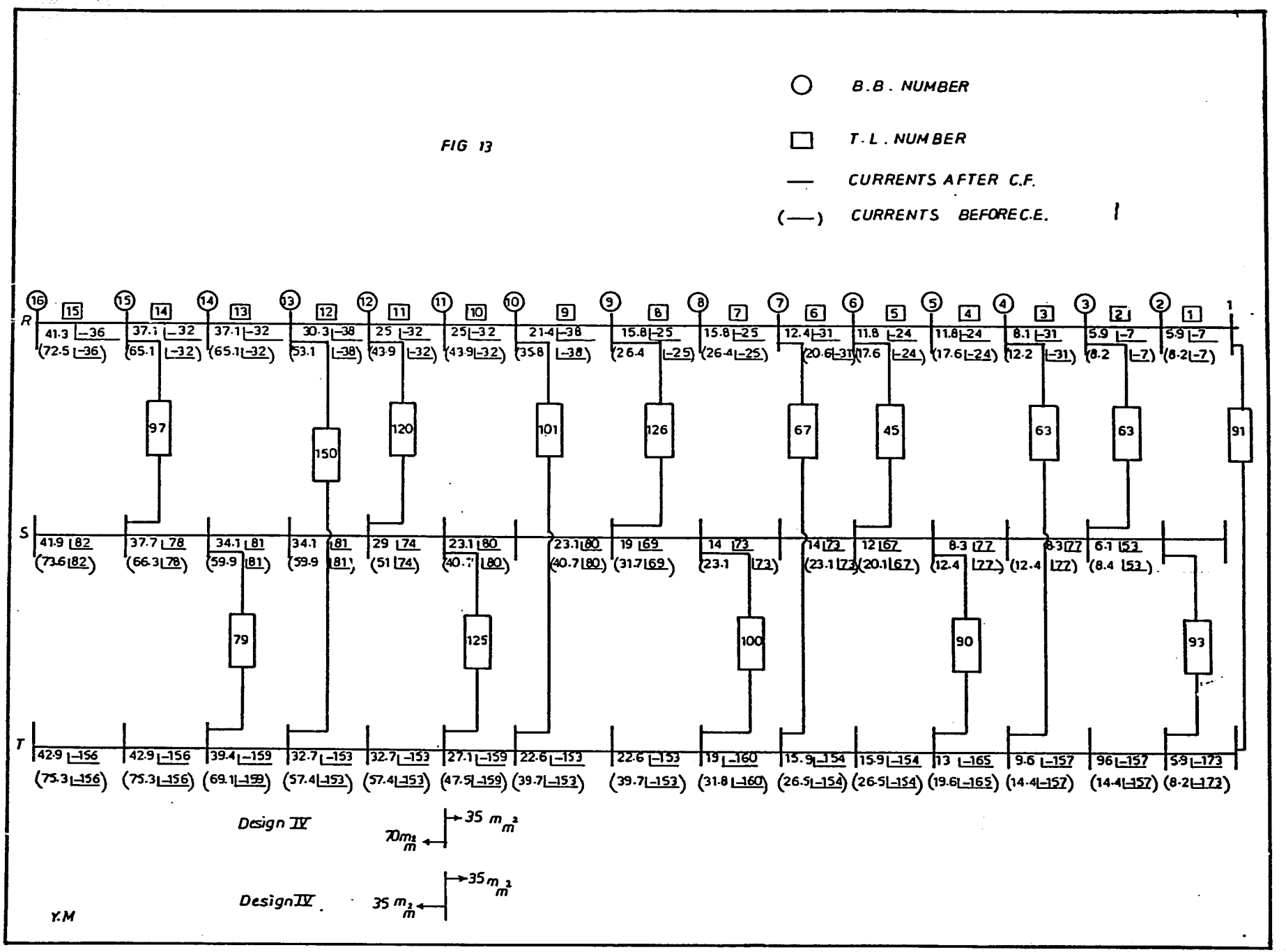
B.B. NUMBER
T.L. NUMBER
CURRENTS AFTER C.F.
CURRENTS BEFORE C.E.
R
S
T
Design IV
Design IV
Y.M

3. Results

Item / Design	Design I	Design II	Design III	Design IV
1) Loads				
- Diversified total demand KVA	804	804	804	804
- Total installed load KVA	1410	1410	1410	1410
- Summation of transformer ratings KVA	1557	1557	1557	1557
2) Conductors:				
i) Total length of line and branches KM	29.4	29.4	29.4	-
70/12 mm^2 ASCR	6.6	--	6.6	--
35/6 mm^2 ASCR	22.8	29.4	22.8	29.4
3) percentage f single phase:				
- Summation of loads fed as 1-ph as a percentage of the total load	0	0	100 %	100 %
- Summation of 1-ph lines as a percentage of the total line length	0	0	42.86 %	42.86 %
- percentage of $(KVA.Km)_{1ph} / (KVA.Km)_{total}$	0	0	15.3 %	15.3 %
4) Unbalance :				
Max.unbalance in Voltage	0	0	0.56 %	0.61 %
Max.Unbalance in Voltage drop	0	0	12 %	10.1 %
Max. Current Unbalance	0	0	3.7 %	3.7 %
5) Voltage drop percentage:				
mognitude and location of max.Voltage drop	3.99 (at B.B.1)	5.31 (at.B.B.1)	4.17 (at B.B.1)	5.5 (at B.B.1)

Item / Design	Design I	Design II	Design III	Design IV
6) power loss in Kw				
- Total power loss Kw	20.861	29.301	21.469	29.876
- power loss in branches Kw	0.374	0.374	0.769	0.769
- power loss in main line Kw	20.487	28.927	20.7	29.107
7) Energy loss Kwh.				
Total Kwh energy loss	260.311×10^3	297.28×10^3	219.52×10^3	256.35×10^3
Kwh energy loss in conductors	91.37×10^3	128.338×10^3	94.034×10^3	130.866×10^3
Kwh energy loss in transformers.	168.94×10^3	168.94×10^3	125.483×10^3	$125.483. \times 10^3$
8) Material cost				
- Conductors cost L.E.				
70/12 mm^2	7655.682		7655.682	
35/6 mm^2	1098.28	14160.07	8412.56	11591.35
Total conductor cost £.E.	18636.962	14160.07	16068.242	11591.35
- pole cost £.E.				
main line 70/12 mm^2	8015.47		8015.47	
35/6 mm^2	7443.33	14630	7443.33	14630
branches 70/12 mm^2				
35/6 mm^2	22003.34	22003.34	17340.3	17340.3
Total pole cost L.E.	37462.14	36633.34	32799.1	31970.3

Item / Design	Design I	Design II	Design III	Design IV
- Cost of insulators and fittings:				
main line 70 mm^2	1731.86		1731.86	
35 mm^2	7769.92	9053.27	5489.31	7187.19
Total cost of insulators and fittings	9087.254	9053.27	7221.17	7187.19
- Cost of transformers.	43431.6	43431.6	29246.3	29246.3
Total material cost L.E.	108617.95	103278.28	85334.812	79995.14
9) Labor cost:				
Total Labor cost	15502.08	15353.15	15015.56	14866.63
Total fixed cost £.E.	166755.51	159370.83	137386.61	127386.61
Annual fixed cost L.E.	30015.991	28686 . 749	24729.589	22929.589
Annual cost of energy loss in conductors £.E.	822.33	1155.042	846.306	1177.794
Annual cost of energy loss in transformers £.E.	1520.46	1520.46	1129.347	1129.347
Cost function L.E.	32358.79	31362.25	26776.375	25236.73

4. Detailed Analysis

I) Voltages at different bus bars as a percentage of the nominal value

B.B.Voltage % / B.B. number	Design I	Design II	Design III			Design IV		
			phase R	phase S	phase T	phase R	phase S	phase T
1	(96.01)	(94.69)	98.33/61.98		98.33/-56.7	97.7/62.66		97.77/-56.96
2	96.03	94.71	98.35/61.99	98.89/-147.84	98.333/-57.7	97.73/62.64	98.36/-177.13	97.77/-56.98
3	96.05	94.73	98.36/61.98	98.89/-177.85	98.34/-57.7	97.74/62.64	98.36/-177.13	97.78/-56.99
4	96.09	94.77	98.378/61.96	98.9/-177.87	98.36/-57.7	97.76/62.6	98.37/-177.15	97.8 /-57
5	96.15	94.83	98.42/61.92	98.91/-177.9	98.37/-57.8	97.8/62.6	98.39/-177.19	97.81/-57.06
6	96.42	95.1	98.56/61.81	98.94/-178.05	98.51/-57.9	97.94/62.5	98.41/-177.33	97.95/-57.24
7	96.78	95.46	98.71/61.65	98.02/-178.25	98.68/-58.16	98.09/62.3	98.49/-177.5	98.11/-57.5
8	96.95	95.53	98.75/61.61	99.04/-178.3	98.71/-58.2	98.12/62.26	98.5/-177.6	98.14/-57.5
9	96.99	95.67	98.82/61.55	99.05/-178.41	98.78/-58.3	98.19/62.2	98.52/-177.7	98.2/157.6
10	97.39	96.07	98.96/61.34	99.18/-178.6	98.96/-58.5	98.33/61.99	98.65/-177.9	98.39/-57.82
11	97.54	96.22	99.015/61.3	99.24/-178.7	99.02/-58.6	98.4/61.9	98.7/-177.9	98.44/-57.9
12	97.76	96.57	99.12/61.16	99.28/-178.8	99.13/-59	98.52/61.8	98.78/-178.2	98.5/-58.1
13	97.89	96.76	99.16/61.1	99.33/-178.87	99.18/-59	98.59/61.7	98.85/-178.3	98.59/-58.2
14	98.28	97.37	99.33/60.9	99.44/-179.1	99.31/-59	98.87/61.4	99.05/-178.6	98.84/-58.5
15	98.81	98.2	99.55/60.6	99.58/-178.36	99.53/-59.3	99.24/60.9	99.29/-179	99.2/-59
16	100	100	100 /60	100 /180	100 /-60	100 /60	100 /180	100 /-60
17	97.11	95.79						
18	96.75	95.43						
19	96.72	95.4						

2) Losses

T.L.no. power loss Kw	Design I	Design II	Design III			Design IV		
			phase R	phase S	phase T	phase R	phase S	phase T
1	0.012	0.012						
2	0.021	0.021						
3	0.056	0.056						
4	0.095	0.095						
5	0.553	0.553						
6	0.831	0.831						
7	0.194	0.194						
8	0.417	0.417						
9	1.459	1.459	total	total	total	total	total	total
10	0.627	0.627	6.352	6.969	8.148	8.9696	9.664	11.244
11	2.5189	1.657						
12	1.593	1.048						
13	5.669	3.729						
14	8.168	5.373						
15	19.546	12.858						
16	0.244	0.244						
17	0.127	0.127						
18	0.003	0.003						

3. Cost

Design / Item cost	Design I			Design II			Design III			Design IV		
	quantity	unit cost	total cost	quantity	unit cost	total cost	quantity	unit cost	total cost	quantity	unit cost	total cost
1) Material												
i) Conductors												
70/12 mm^2	5.98 ton	1280.214	7655.682				5.98 ton	1280.214	7655.682			
35/6 mm^2	9.508 ton	1154.95	10981.28	12.26 ton	1154.95	14160.07	7.2839 "	1154.95	8412.56	10.036	1154.95	11591.35
total cond.cost £.E.			18636.962			14160.07			16068.242			11591.35
ii) poles												
	S T			S T			S T			S T		
main line 70/12	45 11	134 & 179.66	8015.47	- -	- -		45 11	134 & 179.66	8015.47			
35/6	46 12	134 & 179.66	7443.33	91 23	134 & 179.66	14630	46 12	134 & 179.66	7443.33	91 23	134 & 179.66	14630
branches 70/12	- -	- -	- -	- -	- -	- -	- -	- -	- -	- -	- -	- -
35/6	98 66	122.5 & 151.66	22003.34	98 66	122.5 & 151.66	22003.34	98 66	98 & 117.33	17340.3	98 66	98 & 117.33	17340.3
Total pole cost £.E.			37462 .14			36633.34			32799.1			31970.3
iii) Insulators												
main 70/12	202	6.6	1333.2	-	-	-	202	6.6	1333.2	-	-	-
35/6	209	6.424	1342.62	411	6.424	2640.264	209	6.424	1342.62	411	6.424	2640.264
branches 70/12	-	-	-	-	-	-	-	-	-	-	-	-
35/6	689	6.424	4426.14	689	6.424	4426.136	459	6.424	2950.757	459	6.424	2948.618

Design / Item cost	Design I			Design II			Design III			Design IV		
	quantity	unit cost	total cost	quantity	unit cost	total cost	quantity	unit cost	total cost	quantity	unit cost	total cost
iv) Fitting:												
main 70/12	56	7.119	398.66	-	-	-	56	7.119	398.66	-	-	-
35/6	58	7.147	414.526	114	7.147	814.758	58	7.147	414.526	114	4.765	543.172
branches 70/12	-	-	-	-	-	-	-	-	-	-	-	-
35/6	164	7.147	1172.108	164	7.147	1172.108	164	4.765	781.46	164	4.765	781.46
Total cost of insulators & fitting.			9087.254			9053.27			7221.17			7187.19
V) Transformers	23		43431.6	23		43431.6	23		29995.14	23		29995.14
2) Labor												
i) Labor cost of Cond. 70/12 per.KM	6.6	113.733	750.64	-	-	-	6.6	113.733	750.64	-	-	-
35/6, per KM	22.8	91.222	2079.8	29.4	91.222	2681.95	3-ph 1-ph 6.8 + 16	91.22,60.81	620.316+ 973.04	3-ph 1-ph 13.4+ 16	91.22 , 60.81	1222.386 + 973.04
ii) Labor cost of poles main 70/12	56	34.357	1923.97	-	-	-	56	34.357	1923.97	-	-	-
main 35/6	58	34.35	1992.3	114	34.35	3915.91	58	34.35	1992.3	114	34.35	3915.91
branches 35/6	164	34.35	5633.35	164	34.35	5633.41	164	34.35	5633.41	164	34.35	5633.41

Design / Item cost	Design I			Design II			Design III			Design IV		
	quantity	unit cost	total cost	quantity	unit cost	total cost	quantity	unit cost	total cost	quantity	unit cost	total cost
iii)Labor cost of transf.	23	135.734	3121.88	23	135.734	3121.88	23	135.734	3121.88	23	135.734	3121.88
Total labor cost £.E.			15502.08			15353.15			15015.56			14866.63
3)Eng.& supervision			7447.2			7117.886			6021.02			5691.71
4)Transportation			3723.6			3558.94			3010.51			2845.85
5)Over head			13156.72			12574.93			10637.14			10055.35
6)Stores			2172 . 36			2065.57			1706.7			1599.9
7)Contingency			12412			11863.14			10035.04			9486.18
8)Miscelenious			3723.6			3558.94			3010.51			2845.85
Total fixed cost £.E			166755.51			159370.83			137386.61			127386.61
Annual fixed cost £.E			30015.991			28686.749			24729.589			22929.589
Annual cost of energy loss in conductors £.E			822.33			1155.042			846.306			1177.794
Annual cost of energy loss in transf. £.E			1520.46			1520.46			1129.347			1129.347
Total annual cost (cost function)			32358.79			31362.25			26776.375			25236.73

F. STUDY CASE : Sugar Nag-Hammady

1. Case considered :

T.L. 3 from Sugar Nag-Hammady Substation Qena governorate.

Rural Substation Sugar Nag-Hammady :

33/11 KV 2 x 10 MVA,

4 T.L.S out of the Substation

T.L. 3

Length of original design line 70/12mm^2, 25.65 KM

35/6 mm^2, 52.38 KM

Length of proposed design line 70/12mm^2, 2.7 KM

35/6 mm^2, 72.435KM

Total demand of residential loads = 936 KVA

Sum of installed loads (Residential) = 1641 KVA

Total demand of irrigation loads = 854 KVA

Sum of installed loads (Irrigation) = 1067 KVA

The residential loads fed by this line are :

Village	Installed capacity KVA	Transformer rating KVA
1) Nag El-Klaghiya	169.8	63,63,63
2) Nag Howsh	48.1	63
3) Nag El-Qenaaisa	200	100,100
4) Nag El-Adstyia	63.1	63
5) El-Qasi & El-Saiyad	428.2	100,100,100,100,63
6) Nag El-Barara	46.1	63
7) Nag Imran	24.5	63
8) Nag El-Sahsiga	22.8	25
9) Nag El-Haldwiya	42.4	25,25
10) Nag El-Maselha	120.8	100,63
11) Nag El-Hakim	24.1	25
12) Nag Ktwatti	18.5	25
13) El-Rahmoniya	433	160,160,63,63

2. Designs compared

Design I : Original 3-phase design

The route is shown in Fig. 14 while Fig. 15 shows the line data as well as the flow of irrigation and residential loads.

Design II : Modified 3-phase deisng

The same route as design I but 35/6 mm^2 ASCR conductors are used all through except for section from the substation to point 1 which remains 70/12 mm^2.

Design III: Single phase design

The route is the same as that of the three phase design but some of the residential and irrigation loads are now fed from a single phase circuit as shown in Fig. 16 which also shows the conductors cross sections.

FIG 14

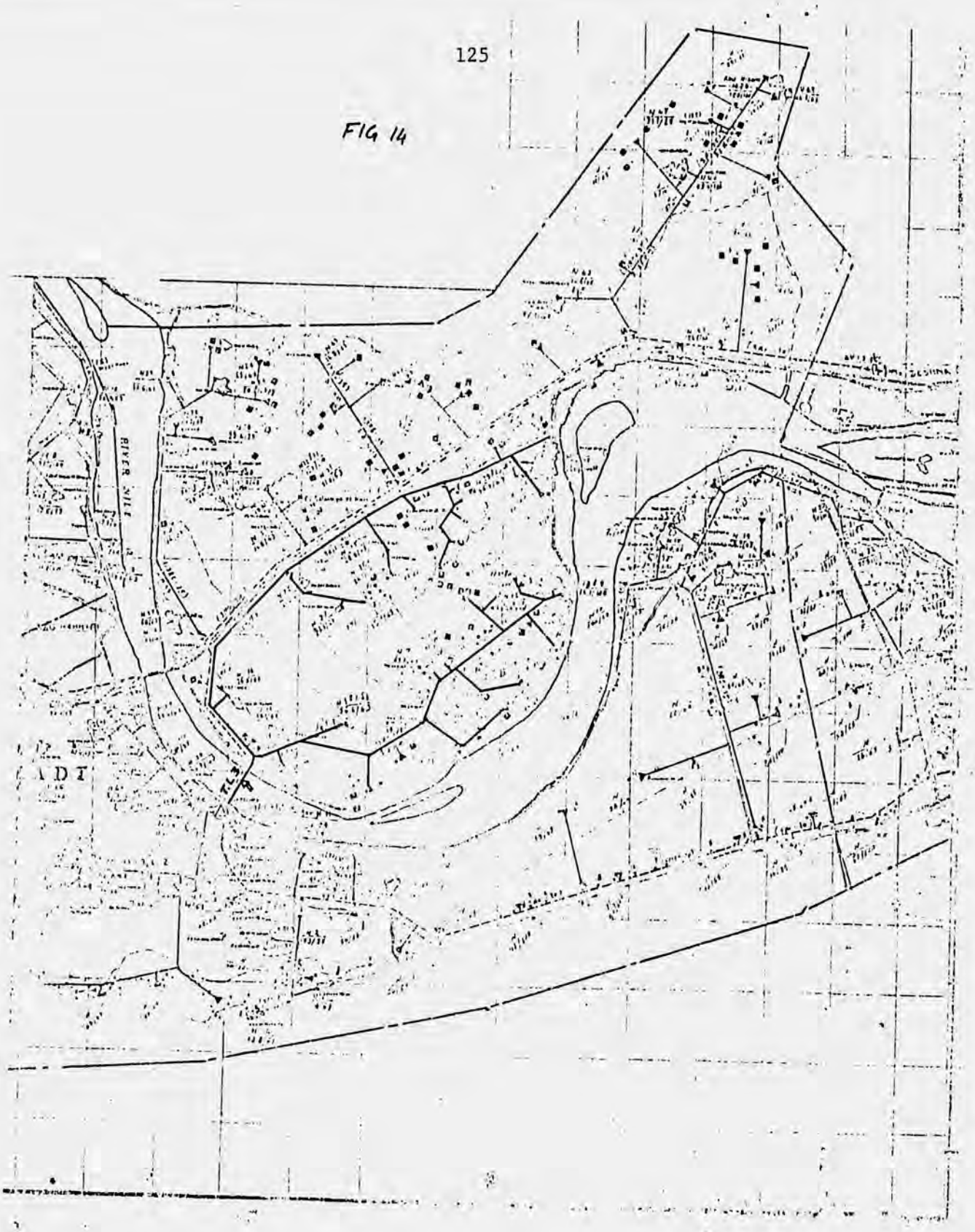

FIG 14

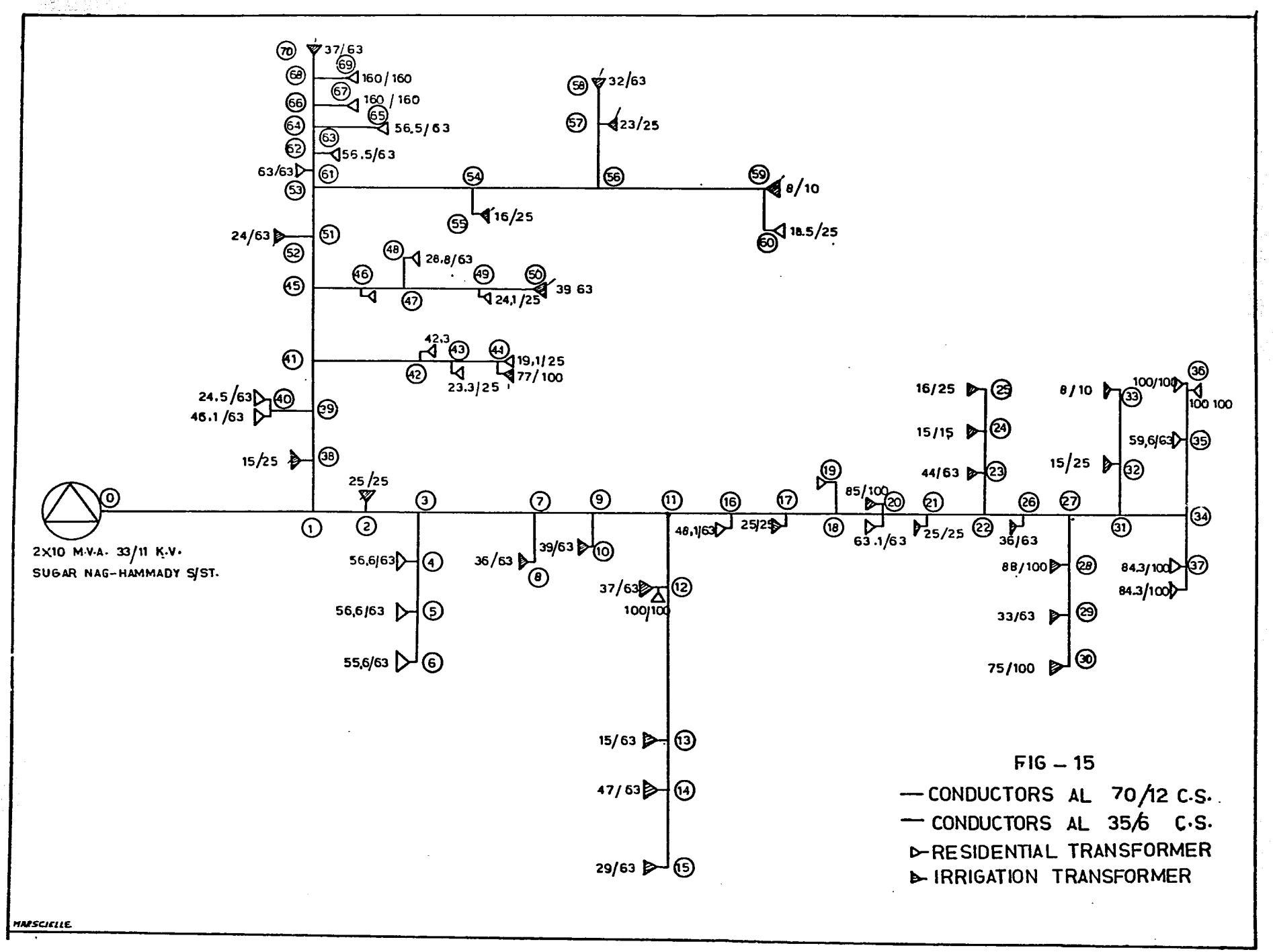

FIG – 15

— CONDUCTORS AL 70/12 C.S.

— CONDUCTORS AL 35/6 C.S.

▷ RESIDENTIAL TRANSFORMER

▷ IRRIGATION TRANSFORMER

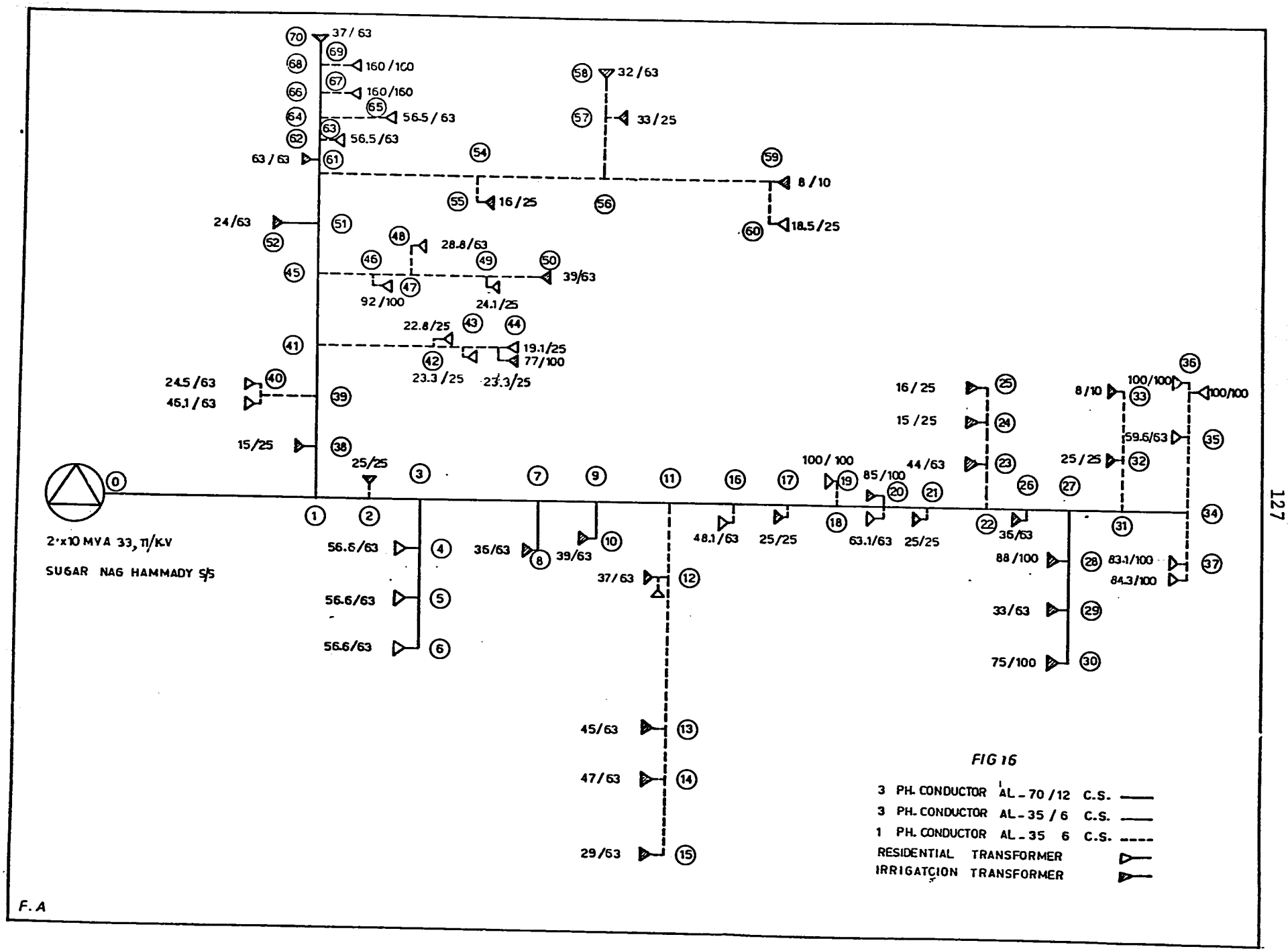
2×10 MVA 33, 11/K.V
SUGAR NAG HAMMADY S/S
37/63
160/100
160/160
56.5/63
56.5/63
63/63
32/63
33/25
8/10
16/25
18.5/25
24/63
28.8/63
39/63
92/100
24.1/25
22.8/25
19.1/25
77/100
23.3/25
23.3/25
24.5/63
45.1/63
15/25
25/25
16/25
15/25
44/63
100/100
85/100
8/10
100/100
100/100
59.6/63
25/25
56.6/63
56.6/63
56.6/63
36/63
39/63
37/63
48.1/63
25/25
63.1/63
25/25
36/63
88/100
33/63
75/100
83.1/100
84.3/100
45/63
47/63
29/63
FIG 16
3 PH. CONDUCTOR AL-70/12 C.S.
3 PH. CONDUCTOR AL-35/6 C.S.
1 PH. CONDUCTOR AL-35 6 C.S.
RESIDENTIAL TRANSFORMER
IRRIGATCION TRANSFORMER
F.A

3. Results

Item \ Design	Design I	Design II	Design III
(1) Loads			
- Diversified total demand KVA	Resid. (936)+Irrig.(854)	Resid(936)+Irrig.(854)	Resid.(936)+Irrig.(854)
- Total Installed load KVA	Resid.(1641)+Irrig.(1067)	Resid.(1641)+Irrig.(1067)	Resid.(1641)+Irrig.(1067)
- Summation of transformer ratings KVA	Resid.(1838)+Irrig.(1517)	Resid.(1838)+Irrig.(1517)	Resid.(1838)+Irrig.(1517)
(2) Conductors			
i) Total length of line and branches km			
70/12mm^2	78.03	75.135	64.475
35/6 mm^2	25.65	2.7	14.925
	52.38	72.435	49.55
(3) Percentage of single phase			
- Summation of loads fed as 1-ph as a percentage of the total load	0	0	Resid(89%)+Irrig.(51.6%)
- Summation of 1-ph. lines as a % age of the total line length	0	0	35%
- (KVA.km) 1 ph/(KVA.km) total	0	0	1.27%
(4) Unbalance			
i) unbalance in KVA %	0	0	0.41%

Item \ Design	Design I	Design II	Design III
(5) Voltage drop			
Magnitude and location of max. V.D.	3.73(at Village El-Qasi)	3.77(at El-Qasi)	3.62(at El-Qasi)
(6) Power loss in KW			
- Total power loss KW	45.482	50.105	45.133
- Power loss in branches KW	0.8459	0.8489	1.181
- Power loss in main line KW	44.636	49.256	43.952
(7) Energy loss KWH			
- Total KWH energy loss	771709×10^3	791.957×10^3	900.812×10^3
- KWH energy loss in conductors	199.213×10^3	219.461×10^3	197.683×10^3
- KWH energy loss in transformers	Resid.(192.663×10^3)+Irrig.(64.763×10^3)	Resid.(192.663×10^3)+Irrig.(64.763×10^3)	Resid.(144.076×10^3)+Irrig.(52.283×10^3)
- KWH energy loss in Irrig. motors	315.07×10^3	315.07×10^3	506.77×10^3
(8) Material cost			
i) Conductors cost L.E.			
70/12 mm^2	9917.59	1043.96	5770.76
35/6 mm^2	8409.35	11629.076	Resid.(7955.01)+Irrig.(298.614)
Total conductor cost L.E.	18326.94	12673.036	14024.384
ii) Pole cost L.E.			
main line 70/12 mm^2	11593.8	1431.33	6297.9
35/6 mm^2	7571.67	16811.67	9511.17

Item \ Design	Design I	Design II	Design III
BRANCHES 70/12 mm^2	----	----	----
35/6 mm^2	18570.2	18570.2	Resid.(15631.52)+Irrig.(568.73)
Total pole cost L.E.	37735.67	36813.2	32009.32
iii) Cost of insulators and fittings main line 70/12mm^2	2503.84	493.9	1362.64
35/ 6mm^2	1783.57	3968.39	2226.99
branches 70/12mm^2	-----	-----	-----
35/ 6mm^2	4712.22	4712.22	Resid.(3460.854)+Irrig.(264.1)
Total cost of insulators and fit. L.E.	8999.63	9174.51	7314.584
iv) Cost of transformers and mot. LE.	Resid.(49255.7)+Irrig.(81566.6)	R.(49255.7)+Irrig.(81566.6)	Resid(34807)+Irrig.(76591.45)
Total material cost L.E.	195884.54	189483.046	164746.73
(9) Labor Cost :			
i) Labor cost of conductors L.E.			
70/12 mm^2	972.426	102.361	565.827
35/ 6 mm^2	1592.753	2202.58	Resid(1506.701)+Irrig.(56.56)
Total conductors Labor cost L.E.	2565.179	2304.941	2129.088
ii) Labor cost of poles L.E.			
70/12	2782.89	343.57	1511.69
35/ 6	6883.97	9357.17	Resid.(7454.39)+Irrig.(33.92)
Total poles Labor cost L.E.	9666.86	9700.74	9000

Item \ Design	Design I	Design II	Design III
iii) Labor cost of transformers L.E.	Resid(3393.35)+Irrig.(3936.29)	Resid(3393.35)+Irrig.(3936.29)	Resid.(3393.35)+Irrig.(3936.29)
iv) Labor cost of motors	2895	2895	2895
Total transformers and motors labor cost L.E.	10224.64	10224.64	10224.64
Total Labor Cost	22456.679	22230.32	21353.728
Engineering & Supervision	Resid.(7796.6)+Irrig.(5303.87)	Resid.(7398.93)+Irrig.(5303.87)	Resid.(6087.35)+Irrig.(5053.97)
Transportation	Resid.(3898.3)+Irrig.(2651.94)	Resid.(3699.46)+Irrig.(2651.94)	Resid.(3043.67+Irrig.(2526.98)
Overhead	Resid.(13773.99)+Irrig(9370.18)	Resid.(13071.44)+Irrig.(9370.18)	Resid.(10754.31)+Irrig(8928.68)
Stores	Resid.(2286.36)+Irrig.(1631.33)	Resid.(2158.33)+Irrig.(1631.33)	Resid.(1740.48)+Irrig.(1546.22)
Contingency	Resid.(12994.33)+Irrig.(8839.79)	Resid.(12331.55)+Irrig(8839.79)	Resid.(10145.58)+Irrig(8423.28)
Miscelaneous	Resid.(3898.3)+Irrig.(2651.94)	Resid.(3699.46)+Irrig.(2651.94)	Resid.(3043.67)+Irrig.(2526.98)
Total fixed cost L.E.	293438.149	284521.586	249921.63
Annual fixed cost L.E.	52818.866	51213.885	44985.893
Annual cost of energy loss in conductors L.E.	1792.917	1975.149	1779.147
Annual cost of energy loss in transformerL.E.	2316.834	2316.834	1767.231
Annual cost of energy loss in Irrig.motorL.E.	2835.63	2835.63	4560.93
Total annual cost (cost function) L.E.	59764.247	58341.498	53093.201

4) Cost

Design / Item cost	Design I			Design II			Design III		
	Quantity	Unit cost	Total cost	Quantity	Unit cost	Total Cost	Quantity	Unit cost	Total cost
(1) Material									
i) Conductors									
70/12	7.746	1280.214	9917.59	0.8154	1280.214	1043.96	4.5074	1280.214	5770.76
35/6	7.281	1154.95	8409.35	10.0685	1154.95	11629.076	7.1455	1154.95	8253.624
Total cond. cost L.E.			18326.94			12673.036			14024.384
ii) Poles	S T			S T			S T		
main line 70/12	65 16	134&179.66	11593.8	8 2	134&179.66	1431.33	35 9	134&179.66	6297.9
35/6	47 12	122.5&151.6	7571.67	105 26	122.5&151.67	16811.67	50 13	(3ph)122.5& 151.67 (1ph) 98&117.33	8085.04
branches 70/12	- -	- -	-	- -	- -	-	11 3		1426.13
35/6	83 55	122.5&151.67	18570.2	83 55	122.5&151.67	18570.2	- -	- -	- -
							11 7	(3ph)122.5& 151.67	2415.02
							75 50	(1ph)98&117.33	13216.5
								additional cost of poles	568.73
Total pole cost L.E.			37735.67			36813.2			32009.32
iii) Insulators									
main 70/12	292	6.6	1927.2	36	6.6	237.6	159	6.6	1049.4
35/6	212	6.424	1361.9	472	6.424	3032.13	261	6.424	1676.668
branches	---	---	---	-	---	---	---	---	---
	580	6.424	3725.92	580	6.424	3725.92	426	6.424	2736.624
								additional 196	

Design / Item cost	Design I			Design II			Design III		
	Quantity	Unit cost	Total cost	Quantity	Unit cost	Total cost	Quantity	Unit cost	Total cost
iv) Fitting									
main 70/12	81	7.119	576.64	36	7.119	256.3	44	7.119	313.24
35/6	59	7.119	421.67	131	7.119	936.26	77	7.119	550.32
branches	-	-	-	-	-	-	-	-	-
	138	7.119	986.3	138	7.119	9174.51	101	7.119	724.23
								additional	68.1
Total cost of insulators+fittingsL.E.			8999.63			9174.51			7314.584
v) i-Residential transformer	25		49255.7	25		49255.7	25		34807
ii-Irrig. motor and trans.	24		81566.6	24		81566.6	36		76591.45
Total material cost			195,884.54			189,483.04			164,746.73
(2) Labor cost L.E.									
i) Labor cost of cond.									
70/12 mm^2	8.55	113.734	972.426	0.902	113.734	102.361	4.975km	113.734	565.827
35/6 mm^2	17.46	91.223	1592.753	24.145	91.223	2202.58	20.07 km	91.223	1563.261
Total cond. Labor cost			2565.179			2304.941			2129.088
ii) Labor cost of poles									
70/12 mm^2			2782.89			343.57			1511.69
Resid. 35/6 mm^2			6883.97			9357.17			7454.39
Irrig. 35/6 mm^2									33.92
Total poles labor cost L.E.			9666.86			9700.74			9000

Design / Item cost		Design I			Design II			Design III		
		Quantity	Unit cost	Total cost	Quantity	Unit cost	Total cost	Quantity	Unit cost	Total cost
iii) Labor cost of trans.										
	Resid.			3393.35			3393.35			3393.35
	Irrig.			3936.29			3936.29			3936.29
Labor cost of motors				2895			2895			2895
Total transf. & motor labor cost L.E.				10224.64			10224.64			10224.64
Total Material cost L.E.			195,884.54			189,483.04			164,746.73	
Labor cost L.E.			1224.64			1224.64			1224.64	
Engineering & supervision	Resid.		7796.6			7398.93			6087.351	
	Irrig.		5303.87			5303.87			5053.97	
Transportation	Resid.		3898.3			3699.46			3043.67	
	Irrig.		2651.94			2651.94			2526.98	
Overhead	Resid.		13773.99			13071.44			10754.31	
	Irrig.		9370.18			9370.18			8928.68	
Stores	Resid.		2286.36			2158.33			1740.48	
	Irrig.		1631.33			1631.33			1546.22	
Contingency	Resid.		12994.33			12331.53			10145.58	
	Irrig.		8839.79			8839.79			8423.28	
Miscellaneous	Resid.		3898.3			3699.46			3043.67	
	Irrig.		2651.94			2651.94			2526.98	

Item cost \ Design	Design I	Design II	Design III
Total fixed cost L.E.	293438.149	28451.586	249921.63
Annual fixed cost	52818.866	51213.885	44985.893
Annual cost of energy loss			
in Cond.	1792.917	1975.149	1779.147
in Trans.	2316.834	2316.834	1767.231
in Irrigation motors	2835.63	2835.63	4560.93
Total annual cost (cost function)	59764.247	58341.498	53093.201

4. Detailed Analysis

1) Voltages at different bus bars as a percentage of nominal value

Point number \ Point Voltage%	Design I	Design II	Design III
1	99.18	99.18	99.18
2	98.85	98.85	98.98
3	98.7	98.7	98.89
4	98.67	98.67	98.86
5	98.66	98.66	98.85
6	98.65	98.65	98.84
7	97.92	97.92	98.11
8	97.91	97.91	98.10
9	97.64	97.64	97.83
10	97.63	97.6	97.825
11	97.27	97.27	97.47
12	97.26	97.26	97.46
13	97.22	97.22	97.37
14	97.2	97.2	97.35
15	97.19	97.19	97.33
16	97.25	97.25	97.45
17	97.07	97.07	97.28
18	96.97	96.97	97.18

Point number \ Point Voltage%	Design I	Design II	Design III
19	96.96	96.96	97.16
20	96.88	96.88	97.08
21	96.87	96.87	96.98
22	96.75	96.75	96.96
23	96.74	96.74	96.94
24	96.735	96.735	96.93
25	96.73	96.73	96.92
26	96.53	96.53	96.74
27	96.48	96.48	96.64
28	96.46	96.46	96.63
29	96.45	96.45	96.61
30	96.44	96.44	96.60
31	96.39	96.39	96.56
32	96.385	96.385	96.452
33	96.383	96.383	96.448
34	96.33	96.33	96.50
35	96.30	96.3	96.44
36	96.27	96.27	96.38

Point number \ Point Voltage%	Design I	Design II	Design III
37	96.31	96.31	96.48
38	99.11	99.08	99.11
39	98.86	98.7	98.86
40	98.85	98.69	98.84
41	98.1	97.63	98.10
42	98.09	97.51	98.05
43	98.04	97.46	97.95
44	98.02	97.44	97.90
45	97.71	96.94	97.51
46	97.706	96.935	97.50
47	97.69	96.925	97.47
48	97.68	96.915	97.465
49	97.673	96.909	97.45
50	97.67	96.90	97.43
51	97.58	96.94	97.31
52	97.57	96.935	97.30
53	97.46	96.55	97.22

Point number \ Point Voltage %	Design I	Design II	Design III
54	97.42	96.5	97.02
55	97.415	96.49	97.01
56	97.413	96.49	96.996
57	97.41	96.485	96.98
58	97.40	96.48	96.97
59	97.39	96.475	96.98
60	97.38	96.47	96.96
61	97.43	96.52	97.09
62	97.36	96.47	97.04
63	97.35	96.45	97.02
64	97.34	96.45	97.02
65	97.28	96.44	96.996
66	97.26	96.38	96.95
67	97.23	96.37	96.89
68	97.24	96.36	96.93
69	97.236	96.355	96.90
70	97.25	96.35	96.91

(2) Residential and Irrigation loads flow in sections :

Section from-to	Length Section km	Residential loads KVA		Irrigation loads KVA		Total load Design KVA	KVA-km
		Connec-ted	Desig-ned	Connec-ted	Desig-ned		
0-1	0.9	1641.3	935.5	1067	853.6	1789.1	1610.2
1-2	0.37	909.2	518.2	733	586.4	1104.6	408.7
2-3	0.37	909.2	518.2	708	566.4	1084.6	401.3
3-4	0.37	169.8	113.7	-	-	113.7	42.06
4-5	0.2	113.2	82.6	-	-	82.6	16.5
5-6	0.2	56.6	56.6	-	-	56.6	11.3
3-7	1	739.4	421.4	708	566.4	987.8	987.8
7-8	0.5	-	-	36	88.8	88.8	44.4
7-9	0.37	739.4	421.4	672	537.6	959	354.8
9-10	0.2	-	-	39	31.2	31.2	6.2
9-11	0.5	739.4	421.4	633	506.4	927.8	463.9
11-12	0.04	100	73	158	126.4	199.4	7.9
12-13	0.62	-	-	121	96.8	96.8	60
13-~~19~~ 14	0.25	-	-	76	60.8	60.8	15.2
14-15	0.5	-	-	29	23.2	23.2	11.6
11-16	0.04	639.3	364.4	475	380	744.4	29.7
16.17	0.3	591.3	354.7	475	380	734.7	220.4

Section from-to	Length Section km	Residential loads KVA		Irrigation loads KVA		Total load design KVA	KVA-km
		Connec-ted	Desig-ned	Connec-ted	Desig-ned		
17-18	0.17	591.3	354.7	450	432	786.7	133.7
18-19	0.12	100	73	-	-	73	8.7
18-20	0.17	491.3	294.7	450	432	726.7	123.5
20-21	0.25	428.2	256.9	365	292	548.9	137.2
21-22	0.05	428.2	256.9	340	272	528.9	26.4
22-23	0.25	-	-	75	60	60	15
23-24	0.25	-	-	31	24.8	24.8	6.2
24-25	0.62	-	-	16	12.8	12.8	7.9
22-26	0.62	428.2	256.9	265	212	468.9	290.7
26-27	0.25	428.2	256.9	229	183.2	440.1	110.02
27-28	0.12	-	-	196	156.6	156.8	18.8
28-29	0.3	-	-	108	86.4	86.4	25.9
29-30	0.25	-	-	75	60	60	15
27-31	0.38	428.2	256.9	33	26.4	283.3	107.6
31-32	0.2	-	-	33	26.4	26.4	5.2
32-33	0.5	-	-	8	6.4	6.4	3.2
31-34	0.3	428.2	256.9	-	-	256.9	77.07

Section from-to	Length Section km	Residential loads KVA		Irrigation loads KVA		Total load design KVA	KVA-km
		Connec-ted	Desig-ned	Connec-ted	Desig-ned		
34-35	0.25	259.6	173.9	-	-	173.9	43.4
35-36	0.25	200	134	-	-	134	33.5
34-37	0.2	167.4	112.1	-	-	112.1	22.4
1-38	0.2	732.1	417.3	334	267.2	684.5	136.9
38-39	0.75	732.1	417.3	319	255.2	672.5	504.3
39-40	0.27	70.6	51.5	-	-	51.5	13.9
39-41	2.37	661.5	377	319	255.2	632.2	1498.3
41-42	0.3	65.1	47.5	77	61.6	109.1	32.7
42-43	0.62	42.3	42.3	77	61.6	103.9	64.4
43-44	0.37	19.1	19.1	77	61.6	80.7	29.8
41-45	1.37	596.4	357.8	242	193.6	551.4	755.4
45-46	0.05	144.9	105.7	39	31.2	136.9	6.8
46-47	0.25	52.8	52.8	39	31.2	84	21
47-48	0.25	28.8	28.8	-	-	28.8	7.2
47-49	0.25	24.1	24.1	39	31.2	55.3	13.8
49-50	0.25	-	-	39	31.2	31.2	7.8
45-51	0.62	451.5	270.9	203	162.4	433.3	268.6
51-52	0.1	-	-	24	19.2	19.2	1.9

Section from-to	Length Section km	Residential loads KVA		Irrigation loads KVA		Total load design KVA	KVA-km
		Connec-ted	Desig-ned	Connec-ted	Desig-ned		
51-53	0.25	451.5	270.9	179	143.2	414.1	103.5
53-54	0.87	18.5	18.5	79	63.2	81.7	71.07
54-55	0.2	-	-	16	12.8	12.8	2.5
54-56	0.2	18.5	18.5	63	50.4	68.9	13.7
56-57	0.25	-	-	55	44	44	11
57-58	0.3	-	-	32	25.6	25.6	7.6
56-59	0.62	18.5	18.5	8	6.4	24.9	15.4
59-60	0.2	18.5	18.5	-	-	18.5	3.7
53-61	0.12	433	259.8	100	80	339.8	40.7
61-62	0.2	433	259.8	37	29.6	289.4	57.8
62-63	0.1	56.5	56.5	-	-	56.5	5.6
62-64	0.13	376.5	225.9	37	29.6	255.5	33.2
64-65	0.25	56.5	56.6	-	-	56.6	14.1
64-66	0.37	330	198	37	29.6	227.6	84.2
66-67	0.2	160	107.2	-	-	107.2	21.4
66-68	0.2	160	107.2	37	29.6	136.8	27.3
68-69	0.2	160	107.2	-	-	107.2	21.4
68-70	0.37	-	-	37	29.6	29.6	10.9

3) Losses

Power loss kw / Section from-to	Design I	Design II	Design III
0-1	12.999	12.999	12.999
1-2	3.138	3.138	2.064
2-3	3.026	3.026	1.99
3-4	0.033	0.033	0.033
4-5	0.009	0.009	0.009
5-6	0.004	0.004	0.004
3-7	6.694	6.694	6.694
7-8	0.003	0.003	0.003
7-9	2.366	2.366	2.366
9-10	0.001	0.001	0.001
9-11	2.952	2.952	2.952
11-12	0.011	0.011	0.022
12-13	0.04	0.04	0.08
13-14	0.006	0.006	0.012
14-15	0.002	0.002	0.004
11-16	0.152	0.152	0.152
16-17	1.111	1.111	1.111

Power loss kw / Section from-to	Design I	Design II	Design III
17-18	0.596	0.596	0.596
18-19	0.004	0.004	0.008
18-20	0.5	0.5	0.5
20-21	0.516	0.516	0.516
21-22	0.096	0.096	0.096
22-23	0.006	0.006	0.012
23-24	0.001	0.001	0.002
24-25	0.0007	0.0007	0.0014
22-26	0.942	0.942	0.942
26-27	0.332	0.332	0.332
27-28	0.02	0.02	0.02
28-29	0.015	0.015	0.015
29-30	0.006	0.006	0.006
27-31	0.209	0.209	0.209
31-32	0.0009	0.0009	0.0018
32-33	0.0001	0.0001	0.0002
31-34	0.136	0.136	0.136

Power loss kw / Section from-to	Design I	Design II	Design III
34-35	0.052	0.052	0.104
35-36	0.031	0.031	0.062
34-37	0.017	0.017	0.034
1-38	0.422	0.6426	0.422
38-39	1.53	2.326	1.53
39-40	0.005	0.005	0.01
39-41	4.279	6.506	4.279
41-92	0.024	0.024	0.048
42-43	0.046	0.046	0.092
43-44	0.017	0.017	0.034
41-45	1.886	2.868	2.868
45-46	0.006	0.006	0.012
46-47	0.012	0.012	0.024
47-48	0.0002	0.0002	0.0004
47-49	0.005	0.005	0.01
49-50	0.002	0.002	0.004

Power loss kw / Section from-to	Design I	Design II	Design III
45-51	0.529	0.805	0.805
51-52	0.0002	0.0002	0.0002
51-53	0.193	0.294	0.294
53-54	0.026	0.04	0.08
54-55	0.0002	0.0002	0.0004
54-56	0.0042	0.0065	0.013
56-57	0.003	0.003	0.006
57-58	0.001	0.001	0.002
56-59	0.0019	0.003	0.006
59-60	0.00047	0.00047	0.00094
53-61	0.099	0.099	0.099
61-62	0.115	0.115	0.115
62-63	0.002	0.002	0.004
62-64	0.058	0.058	0.058
64-65	0.005	0.005	0.01

Power loss kw / Section from-to	Design I	Design II	Design III
64-66	0.126	0.126	0.126
66-67	0.0157	0.0157	0.0314
66-68	0.026	0.026	0.026
68-69	0.0157	0.0157	0.0314
68-70	0.002	0.002	0.002

G. CONCLUSIONS AND RECOMMENDATIONS

The main conclusions that can be drawn from the detailed analysis of the study cases considered in this report are

1. Single phase distribution can be advantgeously integerated in the present three phase, three wire primary rural distribution system in Egypt. It will be mostly confined to 11KV feeders feeding non industrial loads and branching from the main three phase trunk line radiating from the rural substation.

2. The major economical advantge of the single phase distrbution system is the reduced transformers costs. In the sizes commonly used in rural areas in Egypt , a single phase transformer may cost 25 to 45 % less than a three phase transformer with the same KVA rating (with the larger difference in the small sized transformers). In the study cases considered, the cost of the secondary distribution transformers represented between 40% and 50% of the total cost of the 11 KV feeder.

3. The cost of the 11KV poles used in the single phase case

is about 70% of the cost of the three phase poles. Poles represent 30 to 35% of the total feeder cost.

4. The cost of conductors is also smaller in the single phase case for a given voltage drop. Although a single phase feeder has to carry ahigher current to feed a given load, the reduced voltage drop in the transformer and the reduction in number of wires cver-compensate for this effect. It should be remembered that the size of the conductor in the distrubution system is based on voltage regulation requirements and not on ampicity considerations.

5. The cost of energy loss is smaller in the single phase design . The increased loss in the conductors is overcompensated by the reduced loss in the single phase transformers. In the study cases considered , the loss in transformers is about two times the conductors loss in the three phase case,and about 1.5 times in the single phase case.

6. The differences in the cost functions between the single

phase and three phase designs depend on the percentage length of single phase feeders and parcentage KVA carried by these feeders. Although single phase distribution was introduced on a limited scale in the study cases, ($\frac{\text{1ph KVA.Km}}{\text{total KVA.Km}}$ = 1.27 to 27.9 %) savnings between 11% and 22% of the total annual costs have been achived.

7. Unbalance in currents and in voltages due to the use of single phase distribution will not introduce serious operational problems. In the cases considered the maximum unbalance in curment is 3.7% and in voltage 0.6%.

8. In the case of feeders feeding on area with a heavy irrigation load. The use of single phase feeders will be very limited because of the substantially higher cost of single phase motors as compared with three phase motors. Advantages of single phase transformers can be still exploited by feeding three phase motors from three phase feeders thuough two single phase transformers connected in open delta.

9. A decrease of 1% in the maximum permissible voltage drop corresponds to 2 to 5% increase in the cost function.

10. A careful choice of the route can result in substantial improvement in performance and / or the cost function as exmplified by TL 3 in the Qaha Zone.

Recommendations:

1. Single phase distribution should be considered as a viable alternative on the primary distribution level. This is particularly true when isolated nonindustrial loads are fed. When motor loads are fed, the use of single phase transformers connected in open delta should be investigated.

2. Design charts should be prepared to indicate the most economical distribution system for a given load and location and for a specified value of the maximum voltage drop.

3. Design of the primary distribution system should be subjected to a complete optimization process.

The number of phases is only one optimization parammeter. Other important parammeters include the feeders route, the conductors cross sectional area and the maximum permissible voltage drop.