PN-AAU-400

INTSORMIL

1985

..a team effort

Development

COVER PHOTOGRAPHS
(top to bottom)

1. Seed production field of Hageen Dura-1 hybrid sorghum. Gezira area, Sudan. Photo by Darrell Rosenow, Texas A&M University, Lubbock.

2. Harvested pearl millet stacked for drying in a village, Taheisa, Senegal. Photo by David Andrews, University of Nebraska, Lincoln.

3. Dr. Oumar Niangodo shows dwarf pearl millet near Bamako, Mali. This material was developed by IER, Mali. Photo by David Andrews, University of Nebraska, Lincoln.

4. Dr. Gebisa Ejeta, Purdue University/INTSORMIL sorghum breeder, with Sudan seed propagation staff, Sennar, Sudan, in an increase field of Hageen Dura-1 hybrid sorghum.

Dr. Ejeta, working under a UNDP financed project with ICRISAT and in collaboration with colleagues in the Sudan Agricultural Research Corporation (ARC), developed Hageen Dura-1, the first commercial sorghum hybrid in that country. INTSORMIL has contributed greatly both in the development and release of Hageen Dura-1 as well as in the promotion and adoption of the hybrid by farmers in Sudan, with extensive support provided by the USAID Mission in Khartoum. (The female parent of Hageen Dura-1 is ATX 623, an official release from the Texas A&M University/INTSORMIL program. The male parent Karper 1597 was a selection out of an introduction from the Genetic Resources Unit at ICRISAT.)

Dr. Ejeta is now employed as an INTSORMIL sorghum breeder at Purdue University.

Photo by Darrell Rosenow, Texas A&M University, Lubbock.

5. Field of Hageen Dura-1 hybrid sorghum, Wad Medani, Sudan. Photo by Darrell Rosenow, Texas A&M University, Lubbock.

Cover by Eloise Wilson
Department of Agricultural Communications
IANR University of Nebraska-Lincoln

INTSORMIL

1985 Annual Report

Fighting Hunger with Research

A Technical Research Report of the

Grain Sorghum/Pearl Millet

Collaborative Research Support Program (CRSP)

Funding support through Agency for International

Development Grant: AID/DSAN/XII - G - Ø149

Report Coordinator:

John M. Yohe

Associate Program Director

For additional information contact the INTSORMIL Management Entity at:

INTSORMIL
241 Keim Hall
East Campus
University of Nebraska
Lincoln, Nebraska 68583-0723

Telephone (402) 472-6032 Telex 438087 UN INTPRG LCN

A Research Development Program of the Agency for International Development, Participating Land-Grant Universities, Host Country Research Agencies and Private Donors.

INTSORMIL INSTITUTIONS

University of Arizona
Kansas State University
University of Kentucky
Mississippi State University
University of Nebraska
Purdue University
Texas A&M University

The University of Nebraska is an affirmative action/equal opportunity institution.

Contents

INTRODUCTION..... 9
PROGRAM SUPPORT.....19
1985 PROJECT REPORTS.....27
AGRONOMY/PHYSIOLOGY
Executive Summary.....29
Identifying and Evaluating Physiological and Developmental Processes Adversely Affected by Environmental Stresses.....32
Seedling Vigor and Stand Establishment of Pearl Millet.....36
Mineral Element Uptake, Use, Efficiency, and Tolerance in Sorghum/Millet.....46
Agronomy and Cropping Systems.....57
Water and Temperature Effects on Sorghum and Millet as Related to Grain Production and Breeding.....63
Agronomic Research on Sorghum and Millet in North Kordofan, Sudan.....85
Mechanisms of Resistance to Striga in Sorghum.....90
Water Use Efficiency, Intercropping with Legumes, and Tillage of Sorghum and Millet in Botswana.....94
PLANT BREEDING
Executive Summary.....99
Evaluation and Development of Sorghum/Millet Germplasm for Arid Land Agriculture.....103
Sorghum Host-Plant Resistance and Genotype Evaluation.....114
Breeding Sorghum and Pearl Millet for Developing Countries.....126
Breeding for Productivity in Sorghum.....132
Sorghum Improvement in Honduras and Central America.....147
Increasing Resistance to Insects and Improving Efficient Nutrient Use by Genetic Manipulation for Improved Grain Sorghum Production.....162
Breeding for Disease and Drought Resistance and Increased Genetic Diversity.....172
Development of Agronomically Superior Germplasm Including Varieties, Hybrids, and Populations Which Have Improved Nutritional Value and Good "Evident" Grain Quality.....183

Breeding Sorghum Varieties and Hybrids with Improved Grain Quality, Drought Resistance, and Striga Resistance.....196
Adaptation of Sorghum and Pearl Millet to Highly Acid Tropical Soils..205
Sorghum and Millet Improvement in Kenya.....213
Pearl Millet Breeding.....220

ENTOMOLOGY
Executive Summary.....231
Storage and Preservation of Pearl Millet and Sorghum.....232
Biological Investigations and Management of the Fall Armyworm and Other Insect Pests on Sorghum.....236
Development and Evaluation of Systems for Controlling Insect Pests of Sorghum by Integration of Resistant Varieties, Cultural Manipulation and Biological Control.....243

PATHOLOGY
Executive Summary.....255
Sorghum Disease Resistance Evaluation and Pathogenicity Investigations.....257
Identification of Genes Controlling the Reaction of Sorghum to Maize Dwarf Mosaic Virus (MDMV).....264
Studies on Mechanisms of Disease Resistance and Susceptibility and Screening for Improved Resistance to Fungal Pathogens with Emphasis on Anthracnose.....269
Sorghum and Millet Disease Control, Disease Resistance, Host-Parasite Biology, and Diagnosis.....271
Integrated Control of Sorghum Disease and Development of South Texas Sorghum Nursery Programs.....286

FOOD QUALITY AND NUTRITION
Executive Summary.....293
Factors Affecting Common Preferences for Sorghum and Assessing Malnutrition in Children.....295
Study of Biological Effects of Dietary Tannins from High Tannin Varieties of Sorghum and Procedures for Overcoming Toxic Effects.....306
Enhancement of High Tannin Sorghum Utilization.....312

Chemical and Physical Aspects of Food and Nutritional Quality of Sorghum....320
Food and Nutritional Quality of Sorghum and Millet....330

SOCIOECONOMICS
Executive Summary....345
Role of Sorghum, Including Nutritional Implications in Mexico, the Dominican Republic, and Sudan....347
Economic Analysis of the Potential for Marketing Grain Sorghum in the Philippines....359
Economic Evaluation of New Technology in Sorghum and Millet Production in Developing Countries....366

1985 COUNTRY REPORTS....381
Botswana....383
Brazil....387
Burkina Faso....390
Central America and Caribbean....398
Colombia....399
Dominican Republic....406
Egypt....409
Honduras and Mexico....411
India....421
Kenya....422
Mali....427
Mexico....432
Niger....442
Paraguay....450
Philippines....455
Senegal....459
Sudan....461
Tanzania....470

TRAINING....473

ACRONYMS....479

Introduction

Sorghum and millet grain is used for human food and as feed for animals. The plant stem and foliage are used for green chop, hay, silage and for pasture. In some areas the stem is used as building material and the remaining plant material after harvest can be used for fuel. Sorghum and millet rank fourth in world food grain production following wheat, rice and maize. They are especially significant sources of human food in South Asia, much of sub Saharan Africa, and certain areas of Latin America and the Caribbean. In Africa alone, sorghum and millet are produced on 31,770,000 hectares. Together, these two crops constitute the "last resort" of crop production where the natural stress conditions of drought and heat predominate. Since much sorghum and millet is grown under stressful environmental conditions in the arid, semiarid, tropical and subtropical regions of the world, yields are relatively low. Thus sorghum and millet, typically subsistence crops, are most important to the survival of low-income, low resource farmers. Because of this, these crops are not only important for nutritional and economic reasons but also because of cultural, political, and anthropological aspects in the lives of many millions of people.

In an amendment to the International Development and Food Assistance Act of 1975 that has come to be known as Title XII, the Congress of the United States provided for "long-term collaborative university research on food production, distribution, storage, marketing, and consumption," in ways that "maximized the contributions to the development of agriculture in the United States and in agriculturally developing nations."

One of the most innovative initiatives developed by BIFAD under Title XII is the Collaborative Research Support Program (CRSP), a concept aimed at increasing and making more effective use of this country's land grant and other agriculturally oriented universities in AID's foreign assistance programs. CRSPs thus serve the dual objective of benefiting agriculture in developing countries and in the United States. The Sorghum/Millet CRSP (INTSORMIL) is one of the three CRSP'S which pioneered in developing the CRSP structure and model for implementation. There were no precedents to follow. The Sorghum/Millet CRSP grant (AID/DSAN/XII-G-0149) was made on July 1, 1979. The grant was for five years. It was extended for one year

in 1984. This annual report covers the activities for program Year 6, the final year of operation under the initial grant document.

The CRSP's present a unique model for conducting agricultural research in collaboration with developing country agricultural research programs. The INTSORMIL program also demonstrates these characteristics:

-- INTSORMIL has the dual goal of improving agriculture in the developing countries and in the United States.

-- The seven participating U. S. institutions agree to contribute at least 25% of the cost of the CRSP from non-federal resources (in money or in kind), justified on the basis of benefits that can accrue to their state's agriculture and their institution.

-- Host governments collaborating with INTSORMIL also contribute to the program by providing facilities, money and/or personnel.

-- The INTSORMIL program is designed to stimulate collaboration and program development between scientists of participating U.S. and developing country institutions.

-- Each research activity is designed to address a priority constraint to the improved production/utilization of sorghum and millet as identified by the planning grant activity which identified the major research areas which INTSORMIL should address.

-- Training and institution building are natural parts of the CRSP as it works toward the objective of increasing the research capability of collaborating developing countries. During the period of this report, July 1, 1984 - June 30, 1985, there have been 104 LDC students sponsored (total or partial support) in graduate degree programs. Students totally funded by INTSORMIL have been through graduate research assistantships provided under individual research sub projects.

-- INTSORMIL is making a global impact. Collaboration with 17 host countries provides impact in seven major regions; West Africa, East Africa, Southern Africa, Southeast Asia, Central America, the Caribbean and South America.

GOAL

The goal of the CRSP has been to establish active, collaborative research relationships that will contribute to the alleviation of hunger and malnutrition in developing countries by improving the availability and utilization of sorghum and millet.

PURPOSE

The purpose of the sorghum/millet CRSP is to organize and mobilize financial and human resources necessary for mounting a major, multi-institutional US-Host Country collaborative research effort which in turn provides the knowledge base necessary to achieve significant advances in alleviating the principal constraints to improved production, marketing, and utilization of sorghum and pearl millet. A second purpose is to improve the capabilities of host country institutions to generate, adapt and apply improved technology to local conditions.

OBJECTIVES

The INTSORMIL program has three general objectives which are common to all projects.

1. Research/technology development - Scientific resources within the INTSORMIL U. S. University community and within the collaborating host country programs address universal constraints to the production, availability and improved utilization of sorghum and pearl millet. Research constraints addressed by the program fall within the general disciplinary areas of breeding, pathology, entomology, cultural practices, physiology, utilization and socioeconomics.

2. Institutional development - Improved research capability is enhanced through collaboration between the U.S. and host country counterparts, through exchange of professional visits between the U.S. and the host country scientists, and through support of the LDC national research program in terms of equipment, supplies, travel and personnel.

3. Training - This involves both short term and degree training oriented programs for host country staff at U. S. institutions. On site technical assistance/training is provided by the U. S. scientists in conjunction with the collaborative research activities.

Research is the primary emphasis of the program. But the CRSP'S have been planned and organized in such a manner that institutional development and training have been very significant outputs of the program.

MANAGEMENT ORGANIZATION

The University of Nebraska (UNL) is the Management Entity (ME) for the Sorghum/Millet CRSP and is the primary grantee of AID. UNL subgrants to the participating U. S. Universities — Texas A&M, Purdue, Nebraska, Kansas State, Mississippi State, Kentucky and Arizona for the research projects between individual U. S. scientists and their host country counterparts. Country project funds, managed by the ME, flow to the country program in support of the research activities at the host country level. The Board of Directors of the CRSP serves as the top management/policy board for the CRSP. The Technical Committee, External Evaluation Panel and AID personnel advise and guide the ME and the board in areas of policy, technical aspects, budget management, and review.

The Board of Directors

The Board of Directors consists of five institutional representatives from the seven participating U. S. institutions. The ME representative on the Board is a permanent member. One position of the Board rotates annually giving each institution an opportunity to be represented in an equitable manner. Board members are designated by the chief executive officers of their institutions to represent them on policy and administrative matters. The Board elects a chairperson and vice chairperson on an annual basis. The ME serves as the executive secretariat to the Board.

The members of the Board of Directors for FY 85 were:

Dr. Herb Massey, Chair, Director of International Programs for Agriculture, University of Kentucky, Lexington, Kentucky

Dr. Woods Thomas, Director, International Programs in Agriculture, Purdue University, West Lafayette, Indiana

Dr. Dean Bunch, Director, International Programs in Agriculture, Mississippi State University, Mississippi State, Mississippi

Dr. Kurt Feltner, Associate Dean of Agriculture, Kansas State University, Manhattan, Kansas

Dr. R. W. Kleis, Dean, International Programs, University of Nebraska, Lincoln, Nebraska

The Board of Institutional Representatives

The Board of Institutional Representatives representing each of the seven participating institutions meets annually to approve annual budgets and other policy changes affecting the CRSP program. This meeting provides an opportunity for each institution to be represented at one annual meeting.

The Board of Directors met five times during the year and the Board of Institutional Representatives met once. Action taken at these meetings included:

1. Met with External Evaluation Panel (EEP) and reviewed program organization, management and research activities.

2. Reviewed the EEP report and accepted it as being constructive and raising issues which need to be addressed by INTSORMIL.

3. The Board approved a reorganization of the CRSP program thrust. The new Global Plan centers around six prime sites which would network with collaborative sites.

4. Dr. John M. Yohe was appointed as INTSORMIL Associate Program Director.

5. Institutional and internal structure changes were made and approved by AID and BIFAD in the program's request for a three year extension. Institutional changes involved the termination of Florida A&M and the University of Arizona as participating institutions in the program. Internal structure changes were:

   a. The Board of Institutional Representatives' responsibilities were combined with the Board of Directors. The Board of Institutional Representatives was discontinued.

   b. The Technical Committee guidelines were revised to reflect concentration on technical research and training efforts.

   c. The Prime Site Coordinators Council (Ecogeographic Zone Committee) was established. It focuses on overall collaborative program planning, policy, and budget for prime site collaborative programs.

6. A policy for carry over funds by projects from year to year was adopted by the Board.

Technical Committee

The Technical Committee (TC) acts on most technical and operational matters and forwards its recommendations to the Board of Directors and the Program Director. It reviews all project work plans and budgets and makes recommendations on overall program coordination. The TC consists of seven members, one from each institution with an active project. Principal investigators are nominated for membership on the TC by the institutions. An effort is made to keep the TC balanced with regard to discipline representation. The term of office is for three years. Officers of the TC are the Chairman, Vice Chairman and the Secretary.

The present Technical Committee is:

Dr. Vicki Marcarian, Chair, Department of Plant Science, University of Arizona, Tucson, Arizona

Dr. Larry Butler, Department of Biochemistry, Purdue University, West Lafayette, Indiana

Dr. Jerry Eastin, Department of Agronomy, University of Nebraska, Lincoln, Nebraska

Dr. Richard Frederiksen, Department of Plant Pathology and Microbiology, Texas A&M University, College Station, Texas

Dr. Kathleen DeWalt, Department of Behavioral Science, University of Kentucky Medical Center, Lexington, Kentucky

Dr. Ed Kanemasu, Department of Agronomy, Kansas State University, Manhattan, Kansas

Dr. Lynn Gourley, Department of Agronomy, Mississippi State University, Mississippi State, Mississippi

The TC met four times during the year. Significant actions considered by the committee were:

a. Three preproposals for research projects in the areas of millet quality, stored insects, and millet pathology were reviewed and recommended for funding dependent upon availability of funds.

b. Facilitated EEP site visits to U. S. universities.

c. Provided guidance to the development of the 1985 Annual PI Conference, the five year technical report and the highlights report.

d. Based upon the EEP report, the TC made strong recommendations about restructuring of the program to be responsive.

e. The TC provided guidance to the Global Plan committee in its work on developing the Global Plan thrust for the program.

EXTERNAL EVALUATION PANEL

The External Evaluation Panel (EEP) consists of eight members, nominated by PIs, the TC and institutional representatives. The Board of Directors recommends the EEP members to AID/Washington and BIFAD, which give the final approval. The EEP has a chairman and a vice chairman. Representatives from international institutions and countries other than the U. S. are included on the EEP. The EEP is charged with overall evaluation of the sorghum/millet CRSP program, which includes the research collaboration with host countries. The overall evaluation includes a review of projects and programs of the CRSP and it provides a written evaluation and recommendation for addition, elimination, or modification of component projects and overall objectives to include retention, elimination, or addition of new activities.

The EEP is composed of :

Dr. Bruce Maunder, Chair, Vice President, DeKalb-Pfizer Genetics, Lubbock, Texas

Dr. Clarence Gray, Vice Chair, Virginia Polytechnic Institute, 9945 Great Oaks Way, Fairfax, Virginia

Dr. Nancie Gonzalez, University of Maryland, Department of Anthropology, College Park, Maryland

Dr. Glenn L. Johnson, Agricultural Economics Department, Michigan State University, East Lansing, Michigan

Dr. Brhane Gebrekidan, SAFGRAD Coordinator, OAU/STRC/JP SAFGRAD, Nairobi, Kenya

Dr. B. L. Renfro, The Rockefeller Foundation, G.P.O. Box 2453, Bangkok, Thailand

Dr. John Monyo, Chief, Research Development Centre FAO, Via delle Terme di caracalla, 00100 Rome, Italy

Dr. Ricardo Bressani, Head, Division of Ag. & Food Sciences, Instituto de Nutricion, Apartado Postal 1188, Guatamala City, Guatamala

External Evaluation Panel Activities for the year were as follows:

The EEP conducted an indepth review of the INTSORMIL program during the period September 10-14, 1986. The panel broke up into subgroups and held reviews at Purdue University, Texas A&M University and the University of Nebraska. They submitted their review report to the ME on October 1, 1984. This review focused on evaluation of the research and management of the projects located at the U. S. sites. After this extensive review the EEP reported that "rather significant developments suggest progress is occurring with this CRSP designed to especially affect the 80% of the sorghum area which produces no more that 50% of the crop and the majority of this for human consumption plus nearly all the millet producing area of the world--some 43 million hectares." A separate EEP report is available from the ME.

MANAGEMENT ENTITY

The University of Nebraska Management Entity office is located in the Department of Agronomy, 241 Keim Hall, Institute of Agriculture and Natural Resources, University of Nebraska, Lincoln, NE 68583-0723. The ME office is responsible to AID for technical and administrative matters for the CRSP. As the prime grantee it is responsible to AID for all fiscal matters relating to the grant. Other responsibilities include coordination of all memoranda of agreement, coordinating and implementing all committee meetings, Board and EEP meetings and being responsible for all reporting and communications regarding CRSP activities. The ME office coordinates and obtains all travel clearances through AID/W.

Organization

The Management Entity Staff (CRSP Financed) is comprised of:

Dr. Glen J. Vollmar, Program Director

Dr. John M. Yohe, Associate Program Director

Ms. Joan Frederick, Administrative Assistant

Ms. Dorothy Stoner, Secretary

Supportive Management Staff (non CRSP financed)

Mr. Carl Mueller, Fiscal Manager, Grants & Contracts

Dr. Robert Kleis, Dean for International Programs

Activities and Accomplishments for the Year Include:

1. Coordinated and backstopped the EEP panel review.

2. Organized output from the Global Plan committee and the EEP and prepared successful program extension for Years 7,8 and 9 to AID.

3. Served as backstopping office for planning and implementation of the 1985 PI conference.

4. Organized five Board of Directors meetings and four Technical committee meetings.

5. Published five year technical report.

6. Published program bulletin for lay consumption.

7. Participated in AID meeting for program directors.

8. INTSORMIL cosponsored five workshops during this period:
   a. Production & Utilization of Sorghum Workshop
      cosponsor: Dominican Republic, 1984
   b. Sorghum Acid Soil Workshop, 1984
      cosponsor: CIAT
   c. International Sorghum Entomology Workshop, 1984
      cosponsor: ICRISAT
   d. Consultative Meeting and Review of Sorghum Research and Development Program in the Philippines, 1984.
      cosponsor: PCARRD
   e. Sorghum and Millet in Latin American Farming Systems, 1984
      cosponsor: ICRISAT and CIMMYT

Coordination with AID and BIFAD

AID - Liaison is maintained on a weekly basis for advice in program direction and development, securing travel clearances, equipment purchase approvals and for coordination with Regional Bureaus and USAID Missions.

Dr. Robert I. Jackson, AID/S&T/AGR/AP is the AID program manager for the Sorghum/Millet CRSP.

BIFAD - The CRSP programs were jointly developed by the BIFAD standing committee, JRC (now called the JCARD), and by AID. Communication and coordination is maintained with the research division of the BIFAD staff office.

Coordination with the International Centers

INSORMIL has a history from the inception of the program in coordinating and collaborating with ICRISAT, the ICRISAT scientist located at CIMMYT for Latin America, with CIAT and with ICRISAT regional activities located in West Africa. ICRISAT management staff have attended INTSORMIL PI annual conferences and INTSORMIL ME staff have met with ICRISAT management staff to discuss coordination and collaboration in order to avoid duplication of activities.

Specific areas of collaboration are as follows:

1. INTSORMIL has posted a scientist at CIAT to conduct research on adaptation of sorghum to acid soils. This was done in joint planning with CIAT/ICRISAT. This activity has been highly successful. A jointly sponsored workshop by INTSORMIL/ICRISAT and CIAT was held in 1984 at CIAT on the topic of sorghum adaptation to acid soils. This technology has potential for Africa also.

2. The INTSORMIL program director and associate director along with the chairman of the EEP met with the ICRISAT Director General and the Director for international activities and with the CIAT Director General and Deputy Director General to discuss topics of mutual interest for continued collaboration.

3. INTSORMIL cosponsored two workshops with ICRISAT, the Sorghum Entomology Workshop and the Sorghum and Millet in Latin America Farming Systems Workshop.

4. INTSORMIL scientists collaborated by participation and by presentation of invited scientific papers at ICRISAT/SAFGRAD sponsored workshops on sorghum improvement in West Africa and for sorghum and millet improvement in East Africa.

TRAINING

One objective of the Sorghum/Millet CRSP is to improve the research and institutional strength of host country research institutions through short term and degree oriented training programs for host country staff at U.S. institutions. In addition both the host country research and U. S. based research is enhanced through support of U. S. graduate students. The

training aspects of the program are summarized in the section on training, page 473.

PROGRAM SUPPORT

The Sorghum/Millet CRSP grant from AID provided $14,500,000 for the original grant period of five years (July 1, 1979 to June 30, 1984). That included $13,290,000 for program and $1,210,000 for operation of the management entity (Table 2 and Table 3). The one year extension for program Year 6 allowed $3,320,000 for program and $330,000 for operation of the management entity Table 2). Total AID funds expended for the six year period was $16,610,000 for program and $1,540,000 for operation of the management entity (Table 2 and Table 3). In addition the U.S. participating institutions contributed $4,984,836 for the same six year period (Table 4). The management cost for the program amounted to 8.48 percent of the total $18,150,000 granted to the University of Nebraska. This indicates that the management load in relation to total costs is very cost effective. Budget tables are on pages 20 to 25.

Future Funding by AID

The Sorghum/Millet CRSP was administratively approved for a two year extension in May, 1985 for the period of July 1, 1985 to June 30, 1987. During the program Year 7 INTSORMIL has been requested to hold a EEP review of two international sites to evaluate implementation of the new global plan developed in Year 6. A satisfactory review would establish the basis for a program extension of three more years. July 1, 1987 - June 30, 1990.

Collaborating Program Contributions

It is difficult to calculate host country collaborating program contributions because much of the contribution is "in kind". Host governments have contributed substantially to the partnership in research with the U.S. participating institutions.

Table 1.

AID-GRANT CONTRIBUTION TO SORGHUM/MILLET CRSP FOR YEARS 1 (FY 80) THROUGH 6 (FY 85) FOR ALL COLLABORATIVE RESEARCH AND MANAGEMENT ENTITY.

Budget Line Items	FY 80-81 Years 1-2	FY 82 Year 3	FY 83 Year 4	FY84 Year 5	FY 85 Year 6	FY80-85 Totals
Salaries & Benefits	2,145,480	1,015,846	1,478,410	1,497,525	1,467,726	7,604,987
Equip. & Facilities	405,310	144,140	252,086	259,921	230,798	1,292,255
Travel	583,800	318,490	335,711	318,514	305,743	1,862,258
Other Direct Costs	432,200	213,406	154,535	124,657	94,123	1,018,921
Technical Assistance	112,000	104,290	45,000	40,000	40,000	341,290
LDC	224,000	143,475	446,000	534,000	813,480	2,160,955
Indirect Costs	1,097,210	560,353	788,258	725,383	698,130	3,869,334
TOTAL	$5,000,000	$2,500,000	$3,500,000	$3,500,000	$3,650,000	$18,150,000

Table 2.

AID-GRANT CONTRIBUTION TO SORGHUM/MILLET CRSP FOR ALL COLLABORATIVE RESEARCH, U.S. INSTITUTIONS (Florida A&M Univ., Univ. of Arizona, Kansas State Univ., Univ. of Kentucky, Mississippi State Univ., Univ. of Nebraska, Purdue Univ., Texas A&M Univ.) AND THE MANAGEMENT ENTITY.

Budget Line Items	FL	AZ	KS	KY	MS	NE	PR	TX	Institutional Total	ME Budget	ME TA-LDC	Total Grant Request
Years 1&2 (FY 80-81)												
Salary & Benefits	57,500	17,000	206,000	48,500	277,000	487,500	304,700	568,000	1,966,200	179,280		2,145,480
Equip. & Facilities	30,500	5,500	45,300		12,500	26,000	17,000	261,000	397,800	7,510		405,310
Travel	4,500	4,500	130,200	47,000	61,500	60,500	60,000	118,000	486,200	97,600		583,800
Other Direct Costs	5,500	3,100	43,500	9,500	78,000	85,000	101,000	78,000	403,600	28,600		432,200
Technical Assistance											112,000	112,000
LDC											224,000	224,000
Indirect Costs	23,000	6,900	110,000	25,000	145,000	249,000	189,300	261,000	1,010,200	87,010		1,097,210
TOTAL	$121,000	$37,000	$535,000	$130,000	$575,000	$908,000	$672,000	$1,286,000	$4,264,000	$400,000	$336,000	$5,000,000
Year 3 (FY 82)												
Salary & Benefits	27,770	12,440	120,077	25,059	120,300	220,000	144,000	253,000	922,646	93,200		1,015,846
Equip. & Facilities	5,000	2,000	20,000		5,500	24,000	8,000	76,000	140,500	3,640		144,140
Travel	10,000	5,000	50,000	16,750	45,000	40,000	25,000	80,000	271,750	46,740		318,490
Other Direct Costs	2,000	2,000	24,000	4,086	25,000	28,000	40,000	78,000	203,086	10,320		213,406
Technical Assistance											104,290	104,290
LDC											143,475	143,475
Indirect Costs	12,106	6,240	55,400	15,105	74,450	130,698	98,840	121,420	514,253	46,100		560,353
TOTAL	$56,876	$27,680	$269,477	$61,000	$270,250	$442,698	$315,840	$608,420	2,052,241	$200,000	$247,765	$2,500,000

Table 2. Continued

Budget Line Items	FL	AZ	KS	KY	MS	NE	PR	TX	Institutional Total	ME Budget	ME TA-LDC	Total Grant Request
Year 4 (FY 83)												
Salary & Benefits		50,664	174,897	100,858	168,236	287,162	244,574	344,948	1,371,339	107,071		1,478,410
Equip. & Facilities		9,293	13,505	2,000	5,538	38,910	36,508	144,792	250,546	1,540		252,086
Travel		5,653	26,250	43,690	32,136	38,653	47,603	81,226	275,211	60,500		335,711
Other Direct Costs		570	30,691	17,338	2,621	15,000	29,310	41,005	136,535	18,000		154,535
Technical Assistance											45,000	45,000
LDC											446,000	446,000
Indirect Costs		13,820	94,657	56,114	91,469	115,275	122,005	182,029	675,369	112,889		788,258
TOTAL		$80,000	$340,000	$220,000	$300,000	$495,000	$480,000	$794,000	$2,709,000	$300,000	$491,000	$3,500,000
Year 5 (FY84)												
Salary & Benefits		55,591	242,343	28,882	154,432	324,480	246,435	322,312	1,374,475	123,050		1,497,525
Equip. & Facilities		12,324	40,001		4,301	39,990	31,322	125,672	253,610	6,311		259,921
Travel		6,470	46,500	11,755	19,729	45,950	34,900	73,571	238,875	79,639		318,514
Other Direct Costs			35,107	8,882	4,575	6,000	25,804	28,289	108,657	16,000		124,657
Technical Assistance											40,000	40,000
LDC											534,000	534,000
Indirect Costs		15,615	89,049	23,481	81,963	138,580	116,539	175,156	640,383	85,000		725,383
TOTAL		$90,000	$453,000	$73,000	$265,000	$555,000	$455,000	$725,000	$2,616,000	$310,000	$574,000	$3,500,000

Table 2. Continued

Budget Line Items	FL	AZ	KS	KY	MS	NE	PR	TX	Institutional Total	ME Budget	ME TA-LDC	Total Grant Request
Year 6 (FY 85)												
Salary & Benefits		55,980	152,953	83,714	108,218	303,260	284,654	345,260	1,334,039	133,687		1,467,726
Equip. & Facilities		12,412	15,849	2,600	7,129	30,989	37,033	119,286	225,298	5,500		230,798
Travel		5,900	24,000	17,195	18,729	48,430	49,250	82,762	246,266	59,477		305,743
Other Direct Costs			8,729	15,465	2,341	14,359	21,637	17,076	79,607	14,516		94,123
Technical Assistance											40,000	40,000
LDC											813,480	813,480
Indirect Costs		15,709	48,469	45,776	53,583	128,762	134,396	154,616	581,310	116,820		698,130
TOTAL		$90,000	$250,000	$164,750	$190,000	$525,800	$526,970	$719,000	$2,466,520	$330,000	$853,480	$3,650,000

Table 3.

MANAGEMENT ENTITY OFFICE BUDGET DETAILS

Budget Line Items	FY 80-81 Years 1-2	FY 82 Year 3	FY 83 Year 4	FY 84 Year 5	FY85 Year 6	TOTALS FY 80-85 Years 1-6
Salaries & Benefits	179,280	93,200	107,071	123,050	133,687	636,288
Equipment & Facilities	7,510	3,640	1,540	6,311	5,500	24,501
Travel						
International		14,000	29,000	37,900	16,000	
Domestic		5,000	10,000	9,000	5,000	
Board of Directors		5,000	6,000	10,000	6,000	
Technical Committee		6,000	10,000	17,000	11,000	
Administrative Council		1,600	4,000		5,000	
EEP		10,000			10,477	
Workshops		5,140	500	2,739	6,000	
Total Travel	97,600	46,740	59,500	76,639	59,477	339,956
Consultants		2,600	1,000	3,000		6,600
Other Direct Costs	28,600	7,720	18,000	16,000	14,516	84,836
Total Direct Costs	312,990	153,900	187,111	225,000	213,180	1,092,181
Indirect Costs	87,010	46,100	112,889	85,000	116,820	447,819
ME Total Costs	$400,000	$200,000	$300,000	$310,000	$330,000	$1,540,000

Table 4.

SORGHUM/MILLET CRSP SUMMARY OF NON-FEDERAL MATCHING CONTRIBUTIONS BY U.S. INSTITUTIONS
YEARS 1 (FY 80) THROUGH 6 (FY 85).

U.S. INSTITUTION	Years 1-2 FY 80-81	Year 3 FY 82	Year 4 FY 83	Year 5 FY 84	Year 6 FY 85	Grant Years 1-6 Total
University of Arizona	32,941	5,998	42,022	34,349	34,000	149,310
Florida A&M University	20,350	2,400	1,148			23,898
Kansas State University	148,627	125,702	320,148	18,957	110,000	723,434
University of Kentucky	99,702				59,000	158,702
Mississippi State Univ.	169,732	139,498	98,196	110,803	86,000	604,229
University of Nebraska	226,353	156,016	192,066	137,056	180,000	891,491
Purdue University	228,468	114,536	146,433	111,378	170,000	770,815
Texas A&M University	540,863	290,881	287,690	318,523	225,000	1,662,957
TOTAL	$1,467,036	$835,031	$1,087,703	$731,066	$864,000	$4,984,836

1985 Project Reports

The Sorghum/Millet CRSP has research linkages in four geographic regions as delineated by AID through the organization of their Regional Bureaus, Africa, Latin America and the Caribbean, Near East and Asia. Depending upon the host country, the range of disciplines covered under collaborative activities between INTSORMIL and the host country varies from one to seven. The more multidisciplinary the country program is the greater the potential for exchange of information on a regional or international basis.

This section of the report describes the research and collaborative activities progress between individual U. S. scientists and their counterparts along disciplinary lines. Research progress has been significant. New varieties and hybrids have been identified which can make a contribution to the improvement of sorghum production in the developing world. A better understanding of insect pests and disease problems in the collaborating countries has been elucidated. Progress in food grain quality has been a major development. This is true for Latin America and Africa. The level of progress in the INTSORMIL program is indicative of the level of interest and commitment that the U. S. and host country collaborators have in the different areas of research. The collaborative mode of interaction has contributed significantly to the development process and has facilitated the administrative process for accomplishing the tasks undertaken by the program.

The annual progress reports were prepared by the U. S. principal investigators. Results presented are from research accomplished by both the U. S. and host country collaborators.

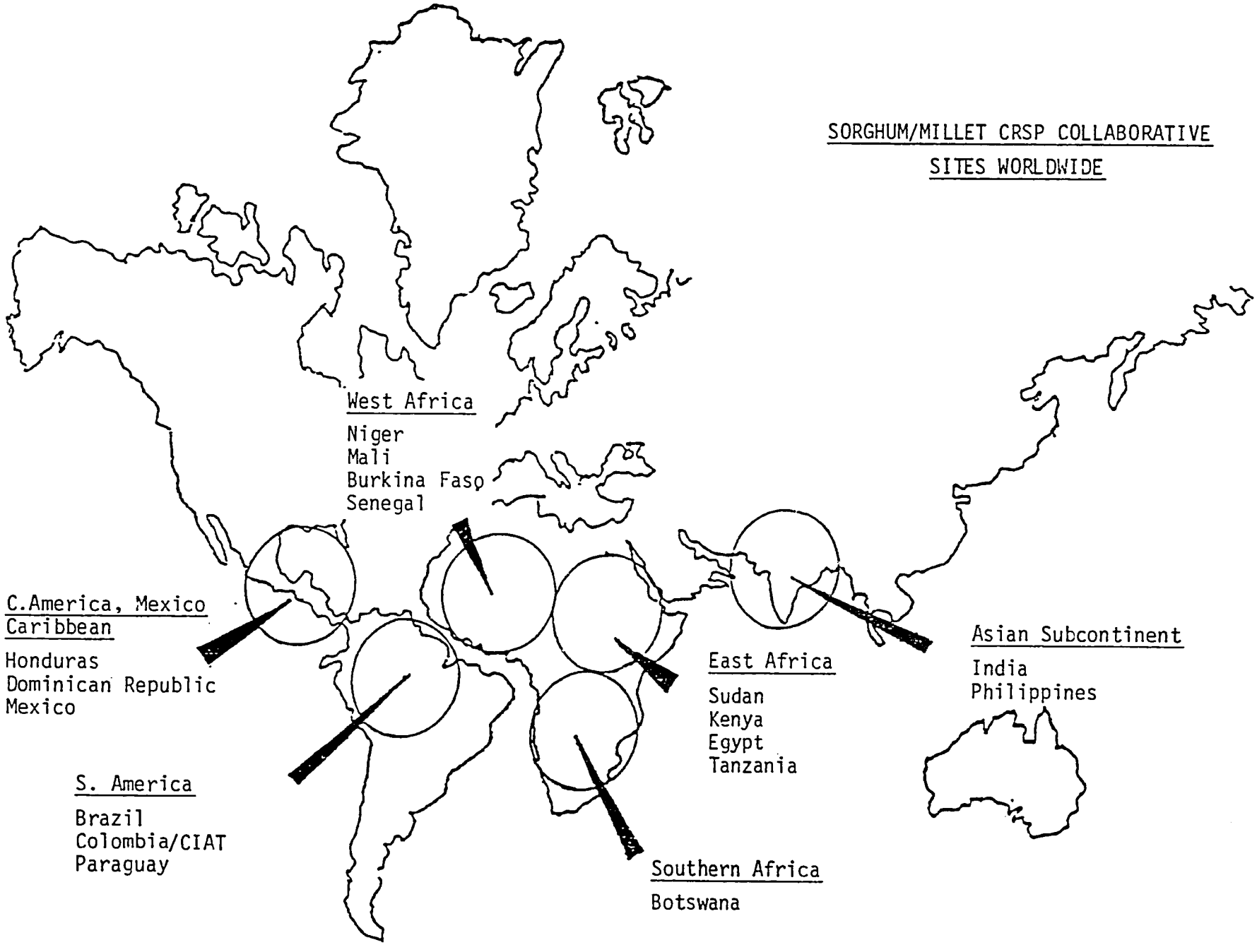
SORGHUM/MILLET CRSP COLLABORATIVE
SITES WORLDWIDE
West Africa
Niger
Mali
Burkina Faso
Senegal
C.America, Mexico
Caribbean
Honduras
Dominican Republic
Mexico
S. America
Brazil
Colombia/CIAT
Paraguay
East Africa
Sudan
Kenya
Egypt
Tanzania
Southern Africa
Botswana
Asian Subcontinent
India
Philippines

Agronomy/Physiology

Executive Summary

Sorghum and millet are usually grown in stressful environments where water and temperature are limiting factors to production. Collaborative research by INTSORMIL scientists has emphasized heat, water and nutrient stress studies in order to identify resistant genotypes.

One characteristic of drought resistant genotypes is high stomatal resistance and, hence, low transpiration rates. To select genotypes for high stomatal resistance, the technique must be capable of rapidly screening large numbers of genotypes. Recent advances in infrared thermometry have made possible rapid measurement of canopy temperatures. Warm canopy temperatures are highly correlated with high canopy resistance and low transpiration rates. Results with over 200 genotypes grown at Yuma, Arizona indicate that canopy temperatures can be used to screen genotypes for drought resistance. (KSU-2)

We are testing management practices that can improve pearl millet seed quality and seedling establishment. Seed size, density and composition can be improved by manipulating the seed crop. Genetically different types of pearl millet also have differing abilities to emerge. Improved seed is tested under different growing conditions such as depth of seed placement or high soil temperatures. Seed management effects appear to be consistent under both average and high soil temperatures. Tall genotypes emerge better from deep planting than dwarfs. Evidence suggests that if we can devise a suitable laboratory test, millet genotypes could be evaluated for their establishment ability. (KSU-6)

We continued to develop and refine techniques for screening sorghum and pearl millet genotypes for mineral element stresses. Cooperative testing programs evaluated germplasm primarily in South America (acid soils) and the Philippines (nitrogen) for stress responses of new and improved sorghum genotypes. Greater emphasis was placed on pearl millet this year, primarily in cooperation with Indian scientists as we anticipate firming this linkage in Year 7.

Progress has been encouraging in our efforts to uncover the environmental influences on genetic response to mineral stress, and to develop a better understanding of the mechanisms involved in mineral element tolerance efficiency. (NU-14)

Yields of sorghum following soybeans in rotation yielded approximately twice that of continuous sorghum. Yields of grain sorghum in rotation were essentially the same as yields of sorghum grown continuously with 50 kg/ha nitrogen applied.

Soil analysis from the experimental plots this year also suggests that there is about 50 kg/ha nitrogen net benefit due to growing the cereal and legume in rotation. This amount of nitrogen is sufficient to influence crop production in many developing countries because it is near the amount of nitrogen recommended for sorghum production.

In Botswana, sorghum/legume (cowpea and groundnut) rotations are in progress. Various aspects of soil fertility are being measured. Yield stability and residue studies are also in progress. (NU-13)

An evaluation for drought resistance of Malian and NP9BR sorghums grown on an irrigation gradient in Yuma, Arizona agreed well with their ranking as previously determined. However, the deep rooting potentials of several other sorghums grown hydroponically did not generally agree with drought resistance as previously ranked by Arizona researchers when grown in Yuma. Other research has shown a positive relation between root growth potential and field drought resistance.

Foliar applications of abscisic acid (a natural plant growth substance) was again shown to increase yields, particularly of drought susceptible genotypes.

Water stress screening in western Kansas has identified drought resistant lines and breeding materials competitive with well known public and commercial genotypes. The source materials were mostly random mating populations from ICRISAT, CIMMYT, Texas and Nebraska. (NU-16)

The 1984 crop year was very dry in North Kordofan, Sudan, with a mean of 129 mm effective rainfall in the project area. Consequently, most crops, including INTSORMIL's experiments at three sites, failed. This emphasized the need for early and drought tolerant genotypes of millet and sorghum.

The early, bristled variety "Ugandi" proved to be superior to the local types under the year's harsh environmental conditions. The Hageen Dura hybrid sorghum developed by ICRISAT/Sudan from INTSORMIL parent lines was also found to be early, drought tolerant and well adapted to both the clay and sandy soils of North Kordofan. (KSU 1-1)

Striga hermonthica is a serious weed pest in Sudan and other African countries. It can cause reductions in crop yield of 60 to 70%. In the U.S., *Striga* is controlled by herbicides, ethylene fumigation and applications of fertilizer. These measures are not available to subsistence farmers in Africa. Breeding cultivars resistant to *Striga* is the most promising approach to achieve control for the small scale farmer.

Several cultivars and lines of sorghum have been identified which possess resistance to *Striga*. If we can identify different mechanisms for resistance, it may be possible to amplify the resistance by gene pyramiding in the breeding program. (PRF-10)

Identifying and Evaluating Physiological and Developmental Processes Adversely Affected by Environmental Stresses

Project KSU-2

E. T. Kanemasu

Kansas State University

Summary

In much of the sorghum and millet growing regions of the world and, in particular, Africa, water is the major limiting factor to crop production. One possible means of improving production is to develop genotypes that are drought resistant. One characteristic of drought resistant genotypes is high stomatal resistance and, hence, low transpiration rates. Lower transpiration along with a short seasoned characteristic would imply a low water-use genotype. The problem is selecting genotypes for high stomatal resistance. The technique must be capable of rapidly screening large numbers of genotypes. Recent advances in infrared thermometry have permitted one to rapidly measure canopy temperatures. Warm canopy temperatures are highly correlated to high canopy resistance and low transpiration rates. Our results, with over 200 sorghum genotypes, indicate that canopy temperatures can be used to screen genotypes for drought resistance.

Institutions

Collaborating Host Countries: Sudan and Botswana

U.S.: University of Arizona

Linkages:

- Developed and executed a research project in Sudan with cooperation from Tareke Berhe.
- Provided equipment and advice to D. Carter in Botswana.
- Designed and implemented a research project with Dr. Virmani from ICRISAT. Dr. Virmani spent his sabbatical leave with the principal investigator.

Ecogeographic Zone Most Benefited by Research

Niger and Botswana

Objectives, Research Procedures, and Production/Utilization Constraints

Sorghum/Millet Constraints

Sorghum and millet are usually grown in relatively stressful environments where water and temperature are major limiting factors to production. For example, an average sorghum yield in Botswana is 200 kg/ha. Therefore, soil water conservation and its interaction with stand establishment, planting date, cropping sequence, and other agronomic management practices plays a key role in this environment. Questions concerning the agroclimatology of these regions in Africa (Botswana, sub-Sahelian, etc.) also appear to be relevant. Is there a trend in the climate? Can we capitalize on the weather events to permit a more favorable environment for the crop?

Year 6 Objectives

This is the last year of funding for KSU-2. The major objective is to examine the physiological and developmental processes in a stressful environment. Graduate students (two) will complete their graduate programs during year 7. Because of Dr. Virmani's sabbatical research, we hope to maintain a modest effort to study the agroclimatology of Africa. We have developed an impressive weather data set for Africa.

Research Procedures

Field data have been collected from experimental plots at Manhattan, Kansas, and Yuma, Arizona. Physiological measurements of stomatal resistance, leaf water potential, and canopy temperature were made on well-watered and stressed plots of selected genotypes of sorghum and millet. In addition, light interception and spectral reflectances were measured.

Project Output

Relevant Findings

A regression technique was used to select drought tolerant sorghum [*Sorghum bicolor* (L.) Moench] and pearl millet [*Pennisetum americanum* (L.) Leeke] genotypes in 1983. Two hundred and nineteen sorghum genotypes, assembled from Purdue University, University of Arizona, Texas A&M University and commercial seed companies, along with 42 millet genotypes from University of Arizona, University of Nebraska, and Kansas State University were planted under a line-source irrigation system at Yuma, Arizona. Five common sorghum hybrids also were used as checks. In 1984

only 27 genotypes of both crops were studied. The canopy temperature of the genotypes was measured for 7 days, starting 67 and 60 days after planting in 1983 and 1984, respectively.

A linear regression model of individual canopy minus air temperature ($\widehat{DT}$) on the observed vapor pressure deficity (VPD) was computed. This equation predicted DT ($\widehat{DT}$) at a given value of VPD for each genotype. The sensitivity of each genotype to changes in VPD was obtained by regressing the observed DT on the DT from the first regression. Warmer genotypes and those less sensitive to changes in VPD produce the most viable heads with the least soil moisture. These results indicated that canopy temperature can be used to select genotypes that possess drought resistance characteristics.

Research Progress

Progress is being made on the analysis of agroclimatic data. A data set consisting of daily weather for several African stations over a period of several years has been assembled. There is some indication that the sub-Sahelian region is becoming more stressful. This is important in assessing new cropping strategies for the region.

Networking Activities

- Participation in AID-USDA PASA activities on Dryland Agriculture, Lubbock, Texas.
- Participation in Agrometeorology of Groundnut Production, Niamey, Niger.

Travel

- Botswana. December 30 - January 16, 1985. Visited KSU-7 project and ATIP project. Purpose: To consult with Dr. Carter and Dr. Norman on possible collaborative projects.
- China. October 3 - October 18, 1984. Visit experiment fields.
- Buenos Aires, Argentina. November 2 - 13, 1984. Present a series of lectures.
- Vancouver, B.C. August 6 - 9, 1985. Present paper at American Society of Horticultural Science on drought resistance.

- Lubbock, Texas. February 18 - 21, 1984. SICNA meeting and INTSORMIL Investigator Meeting.
- Lincoln, Nebraska. September 10 - 13, 1985. External Evaluation Panel Review of INTSORMIL.

Publications and Presentations

Publications

Chaudhuri, U.N., M.L. Deaton, E.T. Kanemasu, V. Marcarian, and A.K. Dobrenz. 1985. A procedure to select drought tolerant sorghum and millet genotypes using canopy temperatures and vapor pressure deficits. Field Crop Research (accepted).

Chaudhuri, U.N., and E.T. Kanemasu. 1985. Agronomic performance of sorghum and pearl millet. Field Crop Research.

Presentations

Chaudhuri, U.N., and E.T. Kanemasu. 1984. A procedure to select drought tolerant sorghum as millet genotypes using canopy temperature and vapor pressure deficit. ASA. Las Vegas. Nov. 1984.

Chaudhuri, U.N., G. Wall, E.T. Kanemasu, and A. Dobrenz. 1984. Using canopy temperature for screening genotypes for drought resistance. SICNA meetings. Lubbock, TX. Feb. 1984.

Changes in Year 7 Objectives

Funding for year 7 will permit the present students to finish their Ph.D programs. We will examine the climatology of Africa in relation to crop production and alternative management strategies.

Seedling Vigor and Stand Establishment of Pearl Millet

Project KSU-6

R. L. Vanderlip

Kansas State University

Other Researchers

Host Countries

D. Carter (Botswana - Sebele Research Station)

T. Berhe (El Obeid, Sudan)

J. Siebert (Botswana - ATIP)

G. Heinrichs (Botswana - ATIP)

D. Gollifer (Botswana - DAR)

United States

W. D. Stegmeier - Fort Hays, Kansas, Millet Breeder

Summary

Pearl millet is a staple food crop grown in much of the semiarid regions of the world such as Sahelian West Africa, East Africa, Southern Africa, and the drier areas of Asia. Pearl millet suffers from many production constraints, especially those affecting its stand establishment. Low and erratic rainfall, high air and soil temperatures and poor soils often contribute to the failure of this small seeded crop to emerge.

Kansas State University is testing management practices that can improve seed quality and seedling establishment. Seed size, density and composition can be improved by manipulating the seed crop. Genetically different types of pearl millet also have differing abilities to emerge.

The improved seed is tested under different growing conditions such as depth of seed placement or high soil temperatures. Seed management effects appear to be consistent under both average and high soil temperatures. Tall genotypes emerge better from deep planting than dwarfs.

In millet growing areas soil temperatures are often high, and the seed is exposed to fast drying soils due to its shallow planting. Evidence suggests if a suitable laboratory test is devised, millet genotypes could be evaluated for their establishment ability.

Institutions

Collaborating Host Countries

Botswana Department of Agricultural Research: Presently no one is working on stand establishment problems. Dr. D. Gollifer is interested in getting work started in the area and when E. Modiakgotla returns, he may be able to work on this.

Agricultural Technology Improvement Project: Dr. J. Siebert, Mahalapye, and Dr. G. Heinrichs, Francistown, Botswana, are taking data on stand establishment in their village trials. Plans are for seed improvement work to be added to the 1985-86 growing season.

Dr. T. Berhe, El Obeid, Sudan, in cooperation with WSARP is testing the effects of management practices developed at Kansas State University.

ICRISAT: Drs. F. Bidinger and P. Soman, millet physiologists, are working on millet adaptation and stand establishment. Cooperative experiments have been conducted.

KSU-1: Mr. W. D. Stegmeier and Dr. B. Khaleeq, Hays, Kansas, Pearl Millet breeding program.

NU-13: Dr. M. Clegg, University of Nebraska.

Ecogeographic Zone Most Benefited by Research

Because of the work in Sudan and Botswana, the zones most likely to be affected by this project are Southern and East Africa. However, since the constraints in the other millet growing areas include stand establishment, the results could be applicable over a much wider area.

Objectives, Research Procedure, and Production/Utilization Constraints

Sorghum/Millet Constraints

Constraints to productivity include climatic, edaphic, and biological factors. The climate of sorghum and millet producing regions has low and erratic rainfall which has high within and between year variability. The solar radiation is high due to frequent cloudless conditions, and humidity is low, resulting in high potential evapotranspiration rates (PET). In Botswana the PET exceeds the precipitation in every month. The soils are often of low fertility and are prone to crusting, rapid drying and high soil temperatures which reduces crop establishment. Sorghum and millets are small seeded crops requiring shallow planting. Social and economic constraints add to the difficulties of crop management. Low yields are the

norm in these regions and crop failure is common. Farmers may be unable to produce subsistence grain and seed for the following season. Low yields are a result of a harsh environment which often prevents adequate stand establishment.

Year 6 Objectives

1. Improved Management to Improve Seed Quality - To test emergence, yield, and yield components of millet seed that was shown to exhibit increased size, weight, density, and protein content. These were produced by management treatments applied to the seed crop.

To test the effect of soil temperature on emergence and yield of these seed sources.

2. Genetic differences in seed and seedling traits - To investigate the effects of seed weight and the length of the radicle, mesocotyl, and coleoptile on emergence, seedling vigor, and the establishment of pearl millet.

Project Output

Research Findings

During Kansas State University field trials, greenhouse studies, growth chamber studies, and laboratory work attempted to examine seed quality differences of genotypes and seed lots produced by improved management practices of the seed crop. Interactions with planting depth and temperature were examined for these groups, respectively.

In Botswana, experiments are designed to consider soil husbandry factors and tillage, stand establishment, and genetic variations of varieties across several environments. Stand establishment especially examines the interaction between soil moisture and soil temperature.

In Sudan, the spikelet removal technique, which has shown to improve seed size, has been applied both to sorghum and pearl millet. Stand establishment, vigor, and yield trials have been conducted.

Research Progress

Mr. E. Modiakgotla, from Botswana, used seed sources with improved characteristics produced by previous students (see Table 1) to evaluate establishment and yield improvements. Quality of the seed crop was enhanced by spikelet removal (one third lengthwise was removed), head selection, late

thinning, and nitrogen application. These practices increased the seed size, weight, protein, and density, although not consistently for all years.

The longevity of the seed was enhanced by improved management practices. Germination percentages were maintained by the improved seed but declined for the controls (see Table 2).

No differences in emergence among seed sources were observed at Manhattan. However, at a drier site (St. John) emergence was 64.7 percent from 1981 spikelet removal seed compared to 52.5 percent from the control. The 1982 seed with applied nitrogen also gave a significant improvement in establishment. Yield was not improved at either location.

Soil temperature was raised with clear plastic in the field and by charcoal in the greenhouse. Temperature effects on emergence were not significant in the field and in one of three greenhouse studies. In no case were temperature by seed source interactions significant. This showed that even with relatively high temperatures obtained, the seed source effects were consistent. Source effects on establishment are shown in Table 3.

Table 1. The Effect of Management on Seed Characteristics.

Year Produced	Management Treatment	Seed Size (mm)	Seed Weight (g)	Protein Percentage	Seed Density
1980	Control	2.03b*	8.38	10.1b	1.23a
	Spikelet Removal	2.17a	9.18a	10.7a	1.22b
1981	Control	2.34b	10.9b	12.0b	1.20b
	Spikelet Removal	2.57a	12.8a	13.4a	1.26a
	Head Selection	2.53a	13.0a	12.6b	1.26a
1982	Control	2.05b	8.4b	11.8a	1.25a
	Spikelet Removal	2.30a	10.4a	11.7a	1.25a
	Head Selection	2.27a	10.4a	11.7a	1.25a
	Late Thinning	2.03b	8.6b	11.8a	1.25a
	Nitrogen Applied	1.90b	8.3b	11.9a	1.25a

* Means with the same letter within a year are not significantly different.

Table 2. The Effect of Management on Percent Germination, 1984.

Seed Source	Year Seed Produced 1980	1981	1982
Control	78.0b*	78.0b	81.0b
Spikelet Removal	98.0a	98.0a	98.0a
Head Selection	-	98.0a	94.0a
Late Thinning	-	-	93.0a
Nitrogen	-	-	97.0a

* Means with the same letter are not significantly different.
(LSD 0.05 = 7.0, C.V. = 4.9)

Table 3. Establishment from Greenhouse Studies.

Seed Source		Greenhouse Studies 1.	2.	3.
1980 Seed	Control	49.2 abc*	74.0 cde	74.3 cd
	Spikelet Removal	59.0 a	79.3 bc	90.3 a
1981 Seed	Control	44.2 bc	66.5 e	67.0 de
	Spikelet Removal	55.2 a	79.8 abc	87.0 ab
	Head Selection	56.2 a	83.8 ab	84.3 ab
1982 Seed	Control	41.8 c	68.8 e	66.0 e
	Spikelet Removal	52.2 a	68.5 e	86.0 ab
	Head Selection	53.7 ab	71.5 de	82.7 ab
	Late Thinning	53.5 ab	76.8 bcd	81.3 bc
	Nitrogen	49.3 abc	87.3 a	86.3 ab
LSD 0.05		10.5	7.5	7.8
C.V.		17.4	9.9	8.3

* Means with the same letter within an experiment are not significantly different.

Mr. A.M. Mohamed, from Sudan, evaluated 25 millet genotypes of which 17 were dwarf and 8 were tall. Dwarf seedlots had significantly higher seed weights and longer radicles than tall; however, the germination index indicated that taller genotypes germinated faster. All laboratory variables exhibited significant variation among dwarf varieties. All laboratory variables except radicle and coleoptile lengths showed variation among the tall genotypes. This indicates a possible potential for selecting superior genotypes for seedling characteristics.

Field studies show no depth-by-genotype interaction effect on emergence due to planting not being deep enough.

Greenhouse studies using 4 cm, 8 cm, and 12 cm planting depths gave a depth by genotype interaction (see Table 4). At 12 cm the taller genotypes showed a higher percentage emergence and establishment and also reached 20 percent emergence sooner than dwarf seedlots.

Significant correlations between laboratory and greenhouse studies indicate that the radicle, mesocotyl, and coleoptile lengths and germination tests have a potential as criteria for selecting superior establishment capabilities. Failure of the measurements of mesocotyl and coleoptile lengths to account for emergence from deep plantings indicates that the full potential of certain characteristics may not be realized in the laboratory. Thus, further techniques for testing need to be investigated.

Table 4. Overall Dwarf and Tall Means for Greenhouse Variables at Three Greenhouse Planting Depths.

	Planting Depths						
	4 cm		8 cm		12 cm		LSD
Variables	Dwarf	Tall	Dwarf	Tall	Dwarf	Tall	(0.5)*
Time to 20% Emergence (days)	4.5	4.5	5.29	5.68	9.62	7.75*	0.77
Emergence (%)	70.12	70.75	56.47	55.00	5.09	21.75*	9.03
Emergence Index	3.76	3.75	2.69	2.67	0.22	0.98*	0.49
Visual Appearance	4.50	4.56	3.38	3.50	1.56	2.19	n.s.
Establishment (%)	75.77	78.50	69.76	67.50	23.65	39.50*	8.12
Seedling Height (cm)	24.03	24.43	15.06	17.06	8.29	12.31	n.s.
Seedling Dry Weight (mg)	43.17	44.18	27.40	32.56	18.38	25.63	n.s.

* LSD for comparing dwarf and tall means at the same planting depth.

Dr. Tareke Berhe, El Obeid, Sudan, removed one-fourth or one-half the spikelets from heads of two varieties (Baladi and Ugandi) of millet. Removal of one-fourth the spikelet had no effect on seed weight. Removal of one-half the spikelet increased the seed weight from 7.6 g/1000 seed to 9.7 g/1000 seed. Similar to last year, seed sources with heavier seeds, such as

2/3 cut (1983 seed source) had much better establishment, especially when planted at greater (6 cm) depths (see Table 5). Because of severe drought, no yields were recorded.

Table 5. The Effect of Seed Weight on Emergence in Two Millet Genotypes Planted at Kaba Experiment Station in 1984.

Variety	Planting Depth	Emergence			
		Seed from Whole Head		Seed from 2/3 Cut	
	(cm)	Days	%	Days	%
Baladi	2	3	20	3	60
Baladi	4	3.5	53	3	73
Baladi	6	3.5	63	3	80
Ugandi	2	3	50	3	20
Ugandi	4	3	53	3	63
Ugandi	6	4	43	3	76

Travel

- R. L. Vanderlip, along with Dr. L. V. Withee, KSU-7, Dr. E. T. Kanemasu, KSU-2, and Dr. M. Clegg, NU-13, spent December 30, 1984, through January 16, 1985, in Botswana coordinating the work among the U.S. projects, the Botswana INTSORMIL project, the Agricultural Technology Improvement Project, and the Botswana Department of Agricultural Research.
- R.L. Vanderlip attended the SICNA meetings February 18-20, 1985 and the INTSORMIL Principal Investigator Conference February 20-21, 1985 in Lubbock, Texas.

Publications

Lawan, M., F.L. Barnett, B. Khaleeq, R.L. Vanderlip. 1985. Seed Density and Seed Size of Pearl Millet as Related to Field Emergence and Several Seed and Seedling Traits. Agron. J. 77:567-571.

Modiakgotla, E. 1985. Pearl Millet [Pennisetum americanum (L.) Leeke] Emergence, Yield, and Yield Component Response to Seed Quality and Soil Temperature. M.S. Thesis Abstract.

Mohamed, A.M. 1985. Emergence, Seedling Vigor, and Stand Establishment of Pearl Millet as Affected by Mesocotyl Elongation and Other Seed and Seedling Traits. M.S. Thesis Abstract.

Changes in Year 7 Objectives

Research is continuing with evaluation of the management practices on yield and yield components. Establishment of improved seed is being tested over a range of temperature regimes. It is hoped that testing on farmers' fields in Botswana will be possible in 1986.

Mineral Element Uptake, Use, Efficiency, and Tolerance in Sorghum/Millet

Project NU-14

R.B. Clark and J.W. Maranville

University of Nebraska

Other Researchers

Host Countries

G. Alagarswamy (India - ICRISAT)

C.A. Asher (Australia - Professor)

R. Borgonovi (Brazil - Sorghum Breeder)

D.E. Edwards (Australia - Professor)

C. Flores (Colombia - INTSORMIL)

G.E. Franca (Brazil - Soil Scientist)

A.M.C. Furlani (Brazil - Plant Physiologist)

P.R. Furlani (Brazil - Plant Physiologist)

N. Grundon (Australia - Plant Physiologist)

V. Guirogossian (Mexico - ICRISAT)

R.K. Maiti (Mexico - Agronomist {formerly ICRISAT})

P. Pamplona (Philippines - Agronomist)

G. Pitta (Brazil - Soil Scientist)

L. Oliva (Philippines - Agronomist)

D.A. del Rosario (Philippines - Professor)

N. Seetharama (India - ICRISAT)

D. Solomon (Botswana - Agronomist)

United States

D. Andrews - University of Nebraska, Sorghum/Millet Breeder

R.R. Duncan - University of Georgia, Sorghum Breeder

L.M. Gourley - Mississippi State University, Sorghum Breeder

D. Knudsen - University of Nebraska, Professor

W.M. Ross - University of Nebraska, Sorghum Breeder

Summary

The project continued to be active during Year 6 in developing and refining techniques for screening sorghum and pearl millet genotypes for mineral element stresses. Testing programs, cooperative with other United States institutions, evaluated germplasm primarily in South America (acid

soils) and the Philippines (nitrogen) for stress responses of new and improved sorghum genotypes. Greater emphasis was placed on pearl millet during Year 6, primarily in conjunction with Indian scientists in anticipation of this linkage being firmed during Year 7, in which Project NU-14 will be involved. Progress has been encouraging with regard to uncovering the environmental influences on genetic response to mineral stress, as well as developing a better understanding of the mechanisms involved in mineral element tolerance and efficiency. The project produced 19 proceeding papers or abstracts, several chapters in books, and five journal articles during Year 6. It also continued training six students and supported one scientist from ICRISAT on sabbatical leave.

Institutions

Collaborating Host Countries: Australia, Botswana, Brazil, Colombia, India, Mexico and Philippines.

U.S.: University of Georgia, Kansas State University, Mississippi State University and Texas A&M University.

Linkages:

- Australia - Obtaining photographs and co-author of booklet on mineral element deficiency/toxicity symptoms. ICRISAT also wants a modified booklet.
- Botswana - Establishing and producing sorghum on acid soils (also southern Africa).
- Brazil - Cooperative research in screening, adapting, and improving sorghum/millet for growth on acid toxic (Al) and mineral deficient soils.
- Colombia - Cooperative research in screening, adapting, and improving sorghum/millet for growth on acid toxic (Al) and mineral deficient soils.
- India (ICRISAT) - Sorghum/millet genotype differences to mineral nutrients and publication of booklet on mineral element deficiencies/toxicities.
- Mexico - Improve screening techniques for Al toxicity tolerance and write review articles on mineral nutrition of sorghum for book(s) to Spanish speaking peoples.
- Philippines - Nitrogen fertility and farmer demonstration plots on N fertility.

- University of Georgia - Field testing for Al toxicity tolerance in sorghum.
- Kansas State University - Cooperate and understand sorghum adaptation to calcareous (Fe-deficiency chlorosis) soils.
- Mississippi State University - Cooperate in screening, adapting, improving, and understanding genotype differences to acid soils.
- Texas A&M University - Germplasm exchange.

Ecogeographic Zones Most Benefited by Research

(1) South America and (2) Southern Africa

Objectives, Research Procedure, and Production/Utilization Constraints

Sorghum/Millet Constraints

Sorghum/millet required mineral nutrients for plant growth are not being provided in acid and calcareous soils without amendment or use of more tolerant genotypes. Lack of capital assets prevents use of much if any fertilizer or amendment, so the most promising method to adapt sorghum/millet to these soils is to identify and improve plant tolerance to the mineral stress (deficiency or toxicity). The procedure for addressing these problems is to identify the problems in the soils and then help overcome the problem primarily through improved genotype tolerance and efficiency.

Year 6 Objectives

1. Identify and evaluate sorghum/millet germplasm for capabilities to produce high quantity and quality grain and forage under mineral stress conditions, especially in countries collaborating with INTSORMIL programs.

2. Determine effects of environment, production practices, and management conditions in these countries on mineral element interactions as well as efficiency, tolerance, and use of mineral elements by sorghum/millet.

3. Determine physiological and chemical mechanisms for uptake, translocation, accumulation, distribution, balance and use of mineral elements by plants grown under mineral, moisture, and temperature stresses.

4. Train, orient, and assist INTSORMIL participating country scientists (including students) to identify and assess mineral stress problems, screen and evaluate genotypes for mineral stress efficiencies and tolerances, and

perform appropriate procedures in conducting experiments pertinent to mineral stress problems.

Changes in Objectives from Previous Year

Shortened objective statement from nine to four items in Year 6.

Research Procedures

1. In cooperation with Dr. L.M. Gourley (MSU), Colombian and Southern African and Brazilian scientists, new germplasm was identified to grow with minimum input (0.5 ton lime) in acid soils. Plant material and germplasm of promising lines was or will be sent to Nebraska for mineral element analysis and analysis for tolerance mechanisms.

2. Farm demonstrations on N responses and fertility management on sorghum were initiated.

3. A number of articles were written on mineral nutrition of sorghum as requested by Texas and Mexico. Organizing and conducting two International Symposia ("Genetic aspects of plant mineral nutrition" in Madison, Wisconsin, on June 16-20, 1985 and "Iron nutrition and interactions in plants" in Lincoln, Nebraska, on June 24-28, 1985) were handled. R.B. Clark was organizer of the latter Symposium.

4. Sorghum genotypes were screened in two soils with low P (one acid) and nutrient solutions to evaluate germplasm of a wide genetic background for ability to grow under low P levels. Sorghum responses to mycorrhizae in soils with low P were initiated.

5. Sorghum was grown at varied Al and Mn levels to determine toxic levels and the effects of Si on overcoming the toxic responses. Colombian sorghum samples showed enhanced leaf Si as lime in the soil increased and as Al toxicity diminished. Screening genotypes for tolerance to toxic Mn was initiated.

6. Interactions and effects of (i) moisture on N utilization, (ii) legume plants as sources of N, (iii) N sources on other mineral element disorders (e.g., Ca deficiency), (iv) sorghum efficiency as defined by rates of growth, distribution of N, N uptake, leaf areas, etc., and (v) temperature effects on N metabolism were studied.

7. Comprehensive experiments were initiated in pearl millet to identify nitrogen efficient genotypes and quantify the basis for N efficiency in this crop.

Problems Regarding Achievement of Objectives

1. Field and laboratory screening methods still need better relationships/correlations.

2. Inheritance of mineral nutrition traits is complex and not easy to resolve so improvement is slow.

3. Understanding tolerance to mineral stress does not come rapidly.

4. Acid soils of Botswana and southern Africa have not been sufficiently characterized to define problems limiting sorghum/millet growth in these areas.

5. Project funds were too limited to carry out desired or requested objectives (unexpected expenses arose for growth chamber maintenance, greenhouse manager, etc.).

6. Country coordinators need to better identify people with cooperative interests and communicate back more of the "items of concern" so that better cooperative research can be conducted.

Project Output

Research Findings for Immediate Use

1. Photographs are available or are becoming available to publish a color booklet on mineral element deficiency/toxicity symptoms.

2. Laboratory screening methods and traits to evaluate genotypes for mineral stresses (deficiencies and toxicities) are being used.

3. Farm demonstrations are showing "hands-on" information and techniques to be used for N fertilization of sorghum in the Philippines.

4. Liquid samples can be converted to solid samples to assay for micronutrient concentrations by x-ray.

5. Iron concentrations in newly developing leaves is not a good trait to assess plants for Fe-deficiency chlorosis.

6. Mycorrhizae make large differences in sorghum growth when very low P soils are used.

7. Source of N and temperature can cause other mineral element disorders (Ca deficiency) in sorghum. High light intensities cause profuse tillering in some sorghum genotypes.

Research Findings for Future Use

1. Understanding reasons why some genotypes adapt to acid soils (Al toxicity) and others do not (other than genetically different).

2. Methods to screen for Mn toxicity problems that appear prevalent in southern African countries.

3. Mycorrhizae could play a greater role in P nutrition in low P soils than than has normally been recognized.

4. Nitrogen from legume rotations could be important sources of N to sorghum/millet.

5. Basis for N efficiency will be better understood for use in genetic improvement.

Networking Activities

Workshops:

- Second International Symposium, "Genetic aspects of plant mineral nutrition". (Clark is a member of the organizing committee.)
- Third International Symposium, "Iron nutrition and interactions in plants". (Clark was chairman of the organizing committee to set up, organize, and conduct the meeting in Lincoln, Nebraska, is chairman of the editorial committee, and also chairman of the steering committee for future symposia. Maranville was a member of the organizing committee for this meeting.)

Research Investigator Exchanges:

D. Gapasin, Philippines; R. Borganovi, Brazil

Germplasm/Information Exchange:

All requests for germplasm have been referred to D. Andrews, W.M. Ross, L.M. Gourley, and R.R. Duncan. The numbers of reprints and information sent out has not been recorded; they are too numerous to keep records. Many phone calls and visitors receive information continually.

Equipment/Chemicals for Host Country:

Chemicals have been purchased and either carried to or arrangements made to be sent to Brazil.

Travel

International

- Clark to Australia (March) to share photographs and consult on color booklet on mineral element deficiency/toxicity symptoms and sorghum disorders at University of Queensland, St. Lucia (Brisbane), and area with N. Grundon, D.E. Edwards, and C.A. Asher.

- Maranville to Philippines (January) to consult on N fertility research at Los Banos and Southern Mindanao Res. Center with P. Pamplona, L. Oliva, and D.A. del Rosario.

Domestic

- Clark to Garden City, Kansas (July, September, October) to observe plots, help harvest plots, and consult on Fe deficiency chlorosis with E.P. Williams, G.M. Herron, and M.D. Witt.
- Clark to Lubbock, Texas (February) for SICNA and INTSORMIL PI meetings (Clark is chairman of culture and management division of SICNA) to present or co-author papers at SICNA meetings, consult with scientists, work with INTSORMIL program, and discuss cooperative research with scientists (funding for E.P. Williams and P.S. Raju was also provided for them to present their research findings).
- Clark to Las Vegas, Nevada (November/December) to American Society of Agronomy (ASA) meetings to present results from Philippine student research, and to receive the award of Fellow in the ASA.
- Clark to Madison, Wisconsin (June) to 2nd International Symposium "Genetic aspects of plant mineral nutrition" to present or co-author papers on research results of Brazilian, Indian, and USA students and cooperative researchers. To meet as a member of the organizing committee of the symposium (funding was also made for E.P. Williams to present research results and transportation was provided for G. Alagarswamy, N. Seetharama, E.P. Williams, and for R. Borgonovi (Brazil) from Wisconsin to Nebraska).
- Maranville to Lubbock, Texas (February) for SICNA meetings to present or coauthor papers and attend INTSORMIL PI meeting.
- Maranville to Las Vegas, Nevada (November/December) to coauthor paper of Philippine student research, consult with scientists, and discuss cooperative research with Philippine scientists.

Publications and Presentations

Publications

*Bernardo, L.M., R.B. Clark, D. Knudsen, and J.W. Maranville. 1984. Cationic element analysis of plant digests and nutrient solutions by x-ray fluorescence. Agron. Abstr. p. 199.

Bernardo, L.M., R.B. Clark, and J.W. Maranville. 1984. Nitrate/ammonium ratio effects on solution pH, dry matter yield, and nitrogen uptake of sorghum. J. Plant Nutr. 7:1389-1400.

Bernardo, L.M., R.B. Clark, and J.W. Maranville. 1984. Nitrate/ammonium ratio effects on mineral uptake of sorghum. J. Plant Nutr. 7:1401-1414.

Clark, R.B., and L.M. Gourley. 1984. Evaluation of mineral elements of sorghum grown on acid tropical soils. Abstr. Proc. Evaluating sorghum for tolerance to aluminum-toxic tropical soils in Latin America. CIAT, Cali, Colombia.

Furlani, A.M.C., R.B. Clark, J.W. Maranville, and W.M. Ross. 1984. Sorghum genotype differences in phosphorus uptake rate and distribution in plants parts. J. Plant Nutr. 7:1113-1126.

Furlani, A.M.C., R.B. Clark, J.W. Maranville, and W.M. Ross. 1984. Root phosphatase activity of sorghum genotypes grown with organic and inorganic sources of phosphorus. J. Plant Nutr. 7:1583-1595.

Maranville, J.W., P.J. Mattern, and R.B. Clark. 1984. Estimation of sulfur in grain by x-ray fluorescence spectrometry and its relation to sulfur and amino acids of field crops. Crop Sci. 24:303-305.

Solomon, D.B. 1984. Nitrogen efficiency of sorghum inbred lines and parents. M.S. Thesis, Department of Agronomy, University of Nebraska, Lincoln, Nebraska. 87 pp.

*Blewett, T.C., J.W. Maranville, and R.B. Clark. 1985. Temperature effects on nitrogen and partitioning in pearl millet [Pennisetum americanum (L.) Leeke]. Abstr. North-Central Regional Am. Soc. Agron., Manhattan, Kansas.

Clark, R.B. 1985. Mineral nutrition. In P.K. Maiti (ed.) Morphology, growth, and development of sorghum. University of Nuevo Leon, Mexico.

Clark, R.B. 1985. Nutrient deficiencies and excesses in the growth of sorghum. In P.K. Maiti (ed.) Morphology, growth, and development in sorghum. University of Nuevo Leon, Mexico.

Clark, R.B. 1985. Sorghum diseases. II. Non-infectious (abiotic) diseases. A. Nutrient deficiencies and excesses. In R.A. Frederiksen (ed.) Compendium of sorghum diseases. Amer. Phytopath. Soc., St. Paul, Minnesota.

*Clark, R.B., and R.D. Gross. 1985. Plant genotype differences to iron. p. 74. Abstr. 3rd Int. Symp. Iron nutrition and interactions in plants, Lincoln, Nebraska.

*Clark, R.B., and L.M. Gourley. 1985. Evaluation of mineral elements of sorghum grown on acid tropical soils. L.M. Gourley (ed.) Evaluating sorghum for tolerance to aluminum-toxic tropical soils in Latin America. CIAT, Cali, Colombia.

*Furlani, A.M.C., R.B. Clark, W.M. Ross, and J.W. Maranville. 1985. Differential phosphorus uptake, distribution, and efficiency by sorghum inbreds and their hybrids. Abstr. 2nd Int. Symp. Genetic aspects of plant mineral nutrition, Madison, Wisconsin.

*Furlani, P.R., and R.B. Clark. 1985. Characteristics to evaluate genotypic responses to aluminum. Abstr. 2nd Int. Symp. Genetic aspects of plant mineral nutrition, Madison, Wisconsin.

*Galvez, L., R.B. Clark, L.M. Gourley, J.W. Maranville, and W.M. Ross. 1985. Manganese and aluminum toxicity interactions with silicon in sorghum. In Proc. 14th Grain Sorghum Res. Util. Conf., Lubbock, Texas.

*Magnavaca, R., C.O. Gardner, and R.B. Clark. 1985. Comparisons of maize population for aluminum tolerance in nutrient solutions. Abstr. 2nd Int. Symp. Genetic aspects of plant mineral nutrition, Madison, Wisconsin.

*Magnavaca, R., C.O. Gardner, and R.B. Clark. 1985. Evaluation of inbred maize lines for aluminum tolerance in nutrient solutions. Abstr. 2nd Int. Symp. Genetic aspects of plant mineral nutrition, Madison, Wisconsin.

*Magnavaca, R., C.O. Gardner, and R.B. Clark. 1985. Inheritance of aluminum tolerance in maize. Abstr. 2nd Int. Symp. Genetic aspects of plant mineral nutrition, Madison, Wisconsin.

*Odo, P.E., J.W. Maranville, and M.D. Clegg. 1985. Evaluation of mixed crop of sorghum and legumes: yield, maturity and land equivalent ratio (LER). Abstr. North-Central Regional Am. Soc. Agron., Manhattan, Kansas.

*Pierson, E.E., R.B. Clark, D.P. Coyne, and J.W. Maranville. 1985. Iron deficiency stress effects on total iron in various leaves and nutrient solution pH in sorghum and beans. p.75. Abstr. 3rd Int. Symp. Iron nutrition and interactions in plants, Lincoln, Nebraska.

*Raju, P.S., R.B. Clark, R.K. Maiti, and J.W. Maranville. 1985. Differential response of glossy and nonglossy sorghum genotypes to phosphorus. In Proc. 14th Grain Sorghum Res. Util. Conf., Lubbock, Texas.

*Seetharama, N., R.B. Clark, and J.W. Maranville. 1985. Sorghum genotype differences in uptake and use-efficiency of mineral elements. Abstr. 2nd Int. Symp. Genetic aspects of plant mineral nutrition, Madison, Wisconsin.

*Solomon, D.B., J.W. Maranville, and R.B. Clark. 1985. Absorption and distribution of nitrogen by sorghum as influenced by rate and source. In Proc. 14th Grain Sorghum Res. Util. Conf., Lubbock, Texas.

*Williams, E.P., W.M. Ross, R.B. Clark, G.M. Herron, and M.D. Witt. 1985. Variability for induced iron deficiency chlorosis in S_1 progenies from a sorghum population grown in the field and growth chamber. Abstr. 2nd Int. Symp. Genetic aspects of plant mineral nutrition, Madison, Wisconsin.

*Williams, E.P., W.M. Ross, R.B. Clark, G.M. Herron, and M.D. Witt. 1985. Heritability of iron deficiency chlorosis and its effects on agronomic traits in a sorghum population. p. 39. Abstr. 3rd Int. Symp. Iron nutrition and interactions in plants, Lincoln, Nebraska.

*Williams, E.P., W.M. Ross, R.B. Clark, G.M. Herron, and M.D. Witt. 1985. Variability of SH_1 progenies from a sorghum random-mating population for iron chlorosis. In Proc. 14th Grain Sorghum Res. Util. Conf., Lubbock, Texas.

*Zaiter, H.Z., D.P. Coyne, R.B. Clark, and D.S. Nuland. 1985. Genetic variation in field and nutrient solutions and the effect of temperature for leaf chlorosis in dry beans (Phaseolus vulgaris L.). p. 37. Abstr. 3rd Int. Symp. Iron nutrition and interactions in plants, Lincoln, Nebraska.

* Publications marked with * were presentations at meetings indicated.

Other Presentations

Clark, R.B. 1985. Mineral element deficiency/toxicity symptoms and element interactions in sorghum. Colloquium to faculty of Biology Dept., University of Queensland, St. Lucia, Australia.

Changes in Year 7 Objectives

No changes are planned except that Dr. Clark will be on an 8-month ARS Fellowship Program at the Institute of Plant Nutrition, University of Hohenheim, Stuttgart, West Germany (December, 1985-August, 1986) so his direct involvement in INTSORMIL activities will be limited. During this time Dr. L.M. Gourley will handle much of the liaison for cooperative research on acid soil research in South America and Southern Africa, and Dr. Maranville will handle the research and training of students in Nebraska and for some of the alkaline, calcareous soil research at Nebraska.

Agronomy and Cropping Systems

Project NU-13

Max D. Clegg

University of Nebraska

Other Researchers

Host Countries

D. Carter (Botswana - Agronomist)

S. Farah (Sudan - Professor)

L. Gakale (Botswana - Research Officer)

D. Gollifer (Botswana - DAR, Director)

W. S. Jones (Botswana - Chief Research Officer)

M.S. Mostafa (Egypt - Sorghum Breeder)

P. Odo (Nigeria - Scientist)

J.R. Santos (Philippines - Crop Physiologist)

A.S. Soriano (Philippines - Crop Physiologist)

J. Youngquist (Botswana - Graduate Assistant)

W. Youngquist (Botswana - Agronomist)

United States

D. Andrews - University of Nebraska, Professor

J.D. Eastin - University of Nebraska, Professor

J.W. Maranville - University of Nebraska, Professor

R. Vanderlip - Kansas State University, Professor

Institutions

Collaborating Host Countries: Botswana, Philippines, and Sudan

U.S.: Kansas State University

Linkages

- Botswana: Sorghum and legume rotation studies. The legumes used are cowpea and groundnut.
- Philippines: Cropping systems.
- Sudan: Sorghum and legume rotations.
- Kansas State University: Agronomic studies.

Ecogeographic Zones Most Benefited by Research

All zones

Objectives, Research Procedure, and Production/Utilization Constraints

Sorghum/Millet Constraints

In developing countries, inadequate water is considered the major constraint to crop production. However, soil fertility not adequate to support plant growth will result in poor production even with ample water. Therefore, low fertility becomes a major constraint. This becomes an even more pressing problem with more intensive farming for food production as the result of a greater demand for food with an increasing human population.

Year 6 Objectives

1. Explore the soil fertility relationships in intercropping and rotations of sorghum or millets with grain legumes in temperate and tropical conditions.

2. Evaluate the effects of cereal and legume genotypes in contributing to the effectiveness of intercropping and rotation schemes, the efficient use of nitrogen in these schemes, and the alternatives available for meeting fertility needs on the farm.

3. Determine the genotype X cropping interactions in the cereal/legume systems, and the potential for genetic improvement for adaptation to these systems.

4. Develop new germplasm and cropping practices for testing in conditions of fertility deficit, where rotations and multiple cropping patterns are a part of currently used systems.

5. Determine the influence of environmental factors on nitrogen release and the mechanisms involved before, during and after cropping with cereal/legumes.

6. Integrate the component research on intercropping and nitrogen relations with ongoing farming systems research in several outreach projects in the national programs.

Research Procedures

In Nebraska, sorghum/soybean rotations are in progress. A millet/legume rotation is being established. Various microbial and physical measurements are being made on soils from these systems as well as growth and development and biochemical measurements on plants.

In Botswana, sorghum/legume (cowpea and groundnut) rotations are in progress. Various aspects of soil fertility are being measured. Yield stability and residue studies are also in progress.

In Sudan, Project NU-16 is involved with water use and sorghum/legume rotations.

Project Output

Research Findings

Sorghum following soybeans in rotation yielded approximately twice that of continuous sorghum (Fig. 1). Yields of grain sorghum in rotation were essentially the same as yields of sorghum grown continuously and with 50 kg/ha nitrogen applied. Soil analysis from the experimental plots this year also suggests that there is about 50 kg/ha nitrogen due to growing the cereal and legume in rotation. This amount of nitrogen is sufficient to influence crop production in many developing countries because it is near the amount of nitrogen recommended for sorghum production.

Rotation of sorghum and soybean reduced bulk density which would influence both the water holding capacity and atmosphere of the soil. Greater potential mineralizable nitrogen (29 percent) and a longer half-life (18 percent) were associated with soils from the rotation (Table 1). Soil from continuous soybeans had a 10 percent higher potential of mineralizable nitrogen, as well as a 10 percent longer half-life.

Research Progress to Be Available in One to Three Years

Legumes are being evaluated for their effectiveness in fixing nitrogen. They will also be evaluated for their potential in supporting a following cereal.

Evaluation of selections of Segaolane grown intercropped with cowpea or monocrop has been initiated in Botswana. Results will be analyzed to determine if there is a favorable effect for selection under a legume environment.

Short maturity varieties and hybrids are being evaluated for agronomic characteristics. These materials will then be used in row-spacing and date-of-planting studies in Nebraska, Botswana, Sudan, and Egypt to determine their potential when water is limiting or when rain is delayed.

Residue management studies in Botswana are in progress to assess the value of residue on crop response and soil characteristics. Also, proso millet is being evaluated for possible use in management schemes.

Rotation of sorghum and legumes will be continued. A millet/legume rotation has been established. Water use efficiency, soil physical characteristics, crop growth, and crop production will be measured. (See Fig. 1)

Fig. 1. Yields from grain sorghum grown after soybeans (Rota) without nitrogen compared to yields of sorghum grown continuously (Cont) with or without 50 kg/ha nitrogen.

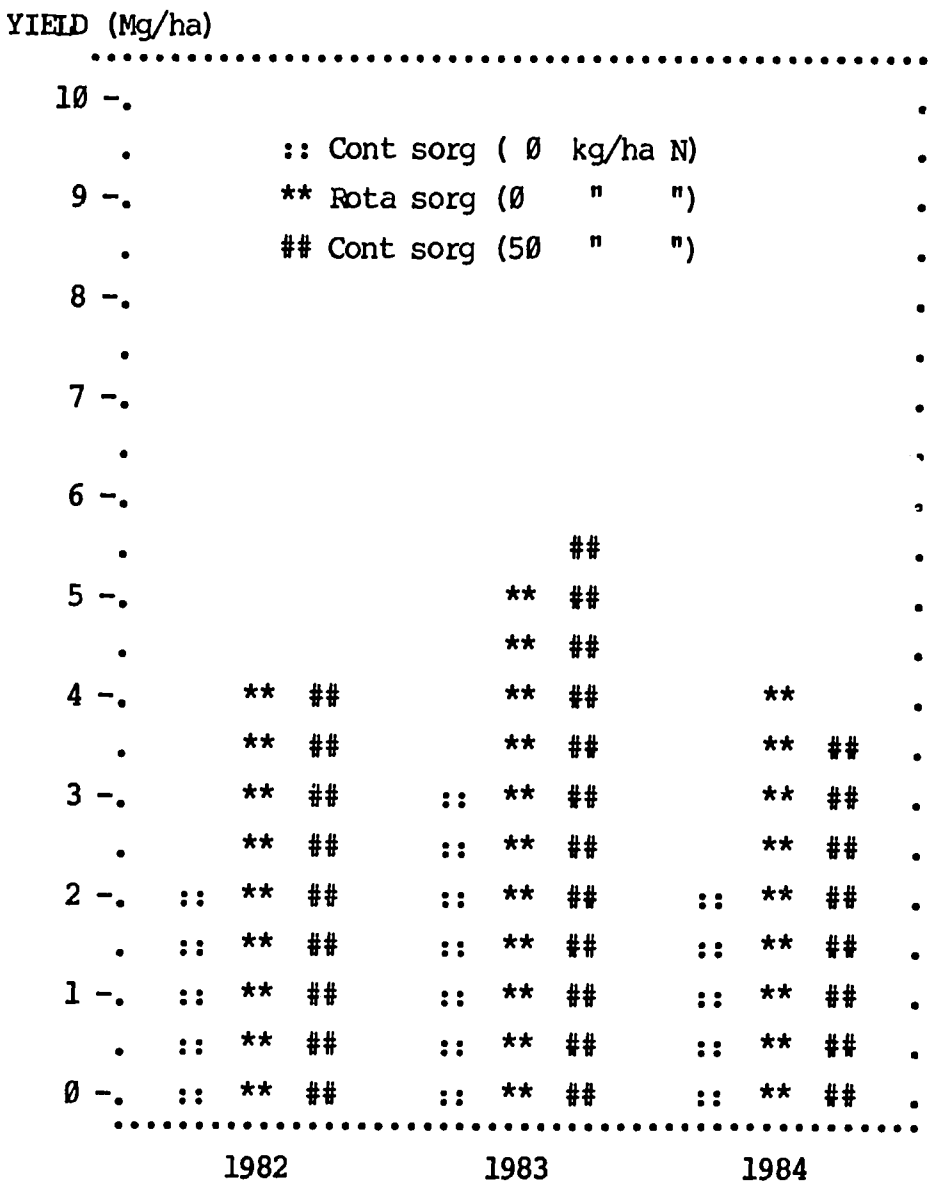

Table 1. Potential mineralizable nitrogen and half-life of soils from continuous soybean and sorghum plots and from sorghum-soybean rotation plots (average of 1981 and 1983).

Cropping Pattern	Mineralized N (mg/kg)	Half-Life (days)
Rotation	155	22.5
Cont sorghum	120	19.0
Cont soybean	132	21.0

Networking Activities

- Staff Development Opportunities and Involvement in International Development: Focus on Africa. December 11, 1984. East Union, University of Nebraska, Lincoln, Nebraska.
- Faculty Development Conference: Economic Interdependence and International Development. April 9, 1985. East Union, University of Nebraska, Lincoln, Nebraska.

Travel

- Las Vegas, Nevada. November 25-30, 1984. Attended the National American Society of Agronomy meetings.
- Botswana. January 1-16, 1985. Max Clegg, Dr. L.V. Withee, KSU-7, Dr. E.T. Kanemasu, KSU-2, and Dr. Richard L. Vanderlip, KSU-6, spent time with the Botswana INTSORMIL project, the Agricultural Technological Improvement project and the Botswana Department of Agricultural Research.
- Lubbock, Texas. February 18-20, 1985. Attended the Sorghum Improvement Conference of North America meetings (SICNA)
- Lubbock, Texas. February 20-21, 1985. Attended the INTSORMIL Principal Investigator meetings.

Publications and Presentations

Bradford, E., M.D. Clegg, and E.J. Penas. 1984. Grain yield of sorghum grown continuously or following soybeans as affected by soybeans and applied nitrogen. Agron. Absts. p. 121. Las Vegas, Nevada.

Gakale, L.P. 1984. Potential use of grain legumes for improved production in low input cropping systems. The Bulletin of Agriculture Research in Botswana. pp. 18-26.

Santos, J.R.A. 1985. Assessing the effects of long-term sorghum-soybean rotation given four nitrogenous fertilizer treatments. Ph.D Dissertation, University of Nebraska. p. 64.

Clegg, M.D. 1985. Leaf chlorophyll and nitrogen relationships of sorghum grown in rotation with soybeans at different levels of applied nitrogen. Fourteenth Biennial Grain Sorghum Research and Utilization Conference, Lubbock, Texas.

Changes in Year 7 Objectives

Dr. S. Mason will be associated with the project. He has had extensive international experience.

Water and Temperature Effects on Sorghum and Millet as Related to Grain Production and Breeding

Project NU-16

C.Y. Sullivan and J.D. Eastin
University of Nebraska

Other Researchers

Host Countries

Dr. S.M. Farah (Sudan)
Dr. M. Traore (Mali)
Dr. F. Fayed (Egypt)
Dr. L. Mazhani (Botswana)
Dr. T. Berhe (Sudan)
Dr. G. Heinrichs (Botswana)

United States

Professor D. Andrews (University of Nebraska)

Summary

Our main thrust is to develop a better understanding of the main plant developmental and physiological mechanisms imparting temperature and water stress resistance to sorghum and millet. This will permit us to cooperate with plant breeders in screening for and developing better stress resistant germplasm and to use developmental and physiological knowledge gained to devise better production practices including tillage and rotation systems including legumes.

Students' training has been a major part of their Year 6 achievement. Graduate and post-graduate trainees from developing countries have gained considerable insight and depth of understanding into the complexities of plant growth, development and yield in stressful environments.

Some of the things studied that may be helpful include:

1. Development of selection techniques and methods for different mechanisms of stress resistance, which include measuring stomatal response to stress.
2. Evaluating root systems for growth characteristics.
3. Measuring water use and water use efficiency.
4. The involvement of natural biochemical compounds, such as abscisic acid, in stress responses.

5. Selecting for seedling tolerance to stress.
6. Measuring overall cellular tolerance to desiccation and high temperatures, and relating to yield and yield components.

An evaluation for drought resistance of Malian and NP9BR sorghums grown on an irrigation gradient in Yuma, Arizona, agreed well with their ranking as previously determined. However, the deep rooting potentials of several other sorghums grown hydroponically did not generally agree with drought resistance as previously ranked by Arizona researchers when grown in Yuma. This was surprising, since other research has shown a positive relation between root growth potential and field drought resistance.

Growth of land races of pearl millet and sorghums from India, Mali, and Sudan under water stress showed some differences in type of stress resistance of the millets and sorghums.

Foliar applications of abscisic acid (a natural plant growth substance) was again shown to increase yields, particularly of drought susceptible genotypes.

Water stress screening in western Kansas has exposed drought resistant lines and breeding materials competitive with well known public and commercial genotypes. The source materials were mostly random mating populations from ICRISAT, CIMMYT, Texas, and Nebraska. Some genotypes have been tested on a limited basis in Egypt, Sudan, and SADCC countries. Currently, they are being tested in those countries plus Senegal, Niger, and Mexico.

The influence of stress resistant genotypes, tillage, nitrogen level, and rotations on efficient use of water are being investigated.

Institutions

Collaborating Host Countries: Sudan, Mali, Mexico, India, Niger, Botswana, Egypt, Dominican Republic, and Zambia.

U.S.: Kansas State University, Texas A&M University, and Purdue University.

Linkages:

Sudan. Cooperative research is in its second year of 1) screening for water use and stress resistance, 2) evaluating row-spacing/plant-density relationships in farmers' fields, 3) evaluating nitrogen use efficiency and legume-sorghum rotation experiments, and 4) testing stress-resistant, high-

yield germplasm selected in Nebraska and western Kansas using African germplasm sources.

Mali. M. Traore will be completing his Ph.D. in December 1985 and returning to Mali. Work plans have been made for extensive cooperative research on several aspects of heat and drought resistance of sorghums and pearl millet in the sub-Saharan environment.

Mexico. Three students have obtained Ph.D. degrees and have returned to Chapingo--Dr. L, Mendoza-Onofere, 1977; Dr. V. Gonzalez-Hernandez, 1982; Dr. M. Livera-Munoz, 1985. Their research has been on sorghum cool temperature tolerance and drought tolerance applicable to high valleys in Mexico and the upper United States Great Plains. Germplasm used has come from CIMMYT/ICRISAT programs. Some germplasm samples from the CIMMYT/ICRISAT program are known to adapt quite well to high elevation areas in Kenya. Therefore, CIMMYT/ICRISAT cool temperature tolerant germplasm selected in Nebraska for drought resistance should fit well in Kenya and other high elevation African areas where water availability ranges from being moderately to severely limiting. Cooperative research in the high valleys of Mexico with these three scientists is just being initiated and should serve high-elevation, dry areas in Latin America, Africa, and the United States Great Plains.

India. Past cooperation back to 1976 has involved exchange of population and some special use germplasm from ICRISAT, partly through their CIMMYT transfer program. Recent germplasm has come in with Drs. Maiti and Seetharama who did research in our laboratories for one and six months, respectively.

Niger. Purdue scientists have requested assistance with water stress programs. Stress resistant germplasm has been sent, but visits to Niger have not yet materialized.

Botswana. Only germplasm exchange has occurred. Discussions are underway with Mr. Mazhani, Dr. Heinrichs, and Dr. Carter regarding stress resistant germplasm.

Egypt. A stress project was written cooperatively with Dr. F. Fayed in December 1983 for consideration by the Agricultural Research Center and was accepted in April 1984. Changes in Egypt AID agricultural personnel have since occurred, and status of that project proposal is unknown.

Dominican Republic. Drought resistant germplasm has been supplied for testing in the drier upper elevations.

Zambia. Germplasm has been supplied to Dr. L. House, ICRISAT/SADCC Sorghum/Millet Research and Training Program, for testing in Zambia.

Ecogeographic Zones Most Benefited by Research

The most important ongoing effort is in Africa (Sudan, Mali, Egypt, and potentially Niger). The second most important is Latin America (with a potential Kenya association), and finally Southern Africa (Botswana, Zambia).

Objectives, Research Procedure, and Production/Utilization Constraints

Sorghum/Millet Constraints

Mali. The primary constraint to conducting meaningful physiological research in Mali has been the lack of trained Malian personnel who could adequately manage and perform the research in cooperation with United States scientists. Also, the lack of necessary physiological equipment has been a constraint to this type of research. These constraints will be largely corrected upon the completion of the Ph.D. program of M. Traore and his return to Mali. Also, the short term plant physiology project in Mali of V.R. Isbell, Texas A&M University, will initiate research similar to that to be conducted by M. Traore. In regard to equipment needs, funds have been budgeted for the NU-16 Year 7 Project for purchase of several pieces of needed equipment for the physiology research in Mali.

Sudan. The overall major constraint is proper water, crop, and soil resources management to insure high water use efficiency (WUE), since water is often the most limiting production factor. More efficient rotation research is needed to improve soil N status using legumes and, hopefully, grain legume production in the rotations for export to generate hard currency for fertilizer production development and/or import. Similar millet production constraints exist. Sudan has, in general, a good base of scientists but needs collaborative help in measuring seasonal and instantaneous WUE as influenced by fertility, rotations and superior germplasm. A modest training effort (one or two students) in instantaneous water use efficiency technology and in nitrogen efficiency technology would be useful. Seasonal water use technology is well covered by Dr. S. Farah.

Mexico. Good scientists are stationed in Mexico. Training needs will be mostly six months to one year Ph.D. technique update work in the United States. Current constraints are operational and equipment funds (for the next three years). Within five years, travel funds to work in Kenya and other high altitude East African nations will likely be a problem.

India. India also has an abundance of good scientists. Cooperative project planning and execution of experiments in India under stress conditions typical of the semiarid topics (SAT) will be useful.

Niger. Stress research programs to complement the Purdue contract are in the planning stage. Travel funds are the most likely need.

Botswana. This program is new and is still being developed.

Egypt. Little new can be done in Egypt until decisions are made by ARC and AID Egypt on program direction and funding.

Dominican Republic. Stress resistant germplasm is sent yearly and is being tested currently by J. Logan in Dr. Neild's project.

Zambia. Germplasm was sent for the SADCC program at the request of Dr. L. House. Physiology cooperation has been delayed until the new breeding program is further along.

Year 6 Objectives

1. To characterize the effects of temperature extremes and water deficits on developmental processes which limit the grain size and grain number components of yield. Use results to develop cropping systems and agronomic practices which maximize and/or stabilize yields.

2. To define physiological characteristics which are affected most by temperature and drought stress, and identify both tolerance and avoidance mechanisms which may improve stress resistance.

3. To evaluate temperature and water effects on metabolic or production efficiency with emphasis on essential physiological processes as they relate to plant development and components of grain yield.

4. To develop and implement practical techniques of screening for drought and heat stress resistance.

Changes in Objectives from the Previous Year

Broad objectives have remained the same the last three years. However, budget reductions are forcing changes in approach. Mostly our water stress screening research has been reduced.

Research Procedures

Screening for drought resistant and high yield was continued at Garden City, Kansas, during the summer of 1984, with the crop being harvested in October and November. The basic screening techniques involved testing for stability in the seed number component of yield, compensation capacity by increasing seed size when stress has reduced seed number and maximum yield potential. Selected genotypes were also grown in Egypt, Sudan, and SADCC nurseries. They were sent to a wider range of countries for the 1985 season.

Environmental control (temperature and water) in the field, greenhouses, and growth rooms has been used to investigate the nature of stress induced damage reducing seed number. Both light and electron microscope investigation have been very useful.

We established some 10 years ago that night temperature can have a substantial effect on grain yield; we have since refined our knowledge of the specific time periods causing yield reduction. Since night temperature influences yield, influences on dark respiration are implicated. Further, since variations in grain yield are not readily explained by variations in photosynthesis, systems have been designed to analyze carbon balance (both respiration and photosynthesis) in an effort to explain yield fluctuations in different environments.

Special subtillage equipment, dark soil tillage equipment and chemical fallow are being used along with three water levels and three rotation systems to test the best combinations to give the highest water use efficiency in arid, higher elevation sorghum areas typical of the U.S. Great Plains, high valleys in Latin America and high elevations of Eastern Africa.

Problems Regarding Achievement of Objectives

Practical stem screening work in western Kansas has been cut back because of substantial budget reductions (40% in two years). The number of foreign students has been cut from three to two.

Project Output

Research Findings for Immediate Use

Both stress and high yield test results are of some immediate value. Since water has repeatedly been stated to be the most limiting production factor in most sorghum production areas, those results will be considered

first. Both dryland and irrigated tests at Garden City, Kansas, contain 144 genotypes including eight well known genotypes (TX 623 x TX 430, four adapted commercial hybrids, RS 671, TX 430, and BCK 60) for comparison with lines selected under stress from random mating populations and hybrids using those lines. Three A lines were used (MS 348, TX 623, and Wheatland). The LSD is high (1806 kg/ha) as expected in this type of drought test where expression of soil variability under water stress tends to be very high. Under these conditions, rank of the genotypes may be of some interest even when differences are not statistically significant. Note in Table 1, that 18 genotypes (5 are lines and 13 are hybrids) ranked above TX 623 x TX 430, and 42 ranked above the best commercial hybrid. The top four genotypes averaged 5,642 kg/ha compared to 4,434 kg/ha for the commercials.

The Garden City irrigated test yield results are given in Table 2. The top hybrid yielded 29 percent more than TX 623 x TX 430. The top 17 hybrids averaged 27 percent higher as compared to the average of the hybrid checks (TX 623 x TX 430 and four commercial hybrids).

Data in Tables 1 and 2 were from one row plots which tend to introduce greater error because of height differences among genotypes. Data in Table 3 from the Purdue Regional Sorghum Test, are gathered from 3 row plots which tends to minimize height difference problems. Four hybrids averaged 9,693 kg/ha which is 16 percent higher than the next four best hybrids and 37 percent higher than the mean of all other hybrids in the test. Both differences are significant.

While yield is a critical factor it is not the only essential consideration dictating commercial feasibility of a hybrid. Stalk strength, plant height, disease resistance and greenbug resistance are other important factors. Some hybrids appear to have good stalk quality and acceptable height, but little is known about their disease and insect resistances. The hybrids have not been tested under conditions varying as widely as has been the case for commercial hybrids in this test and, therefore, cannot be presumed superior to the commercial hybrids on the basis of yield data in this test. However, these and other new wide-cross pollinators appear to merit commercial exploitation. Some of the high yielding later lines which also have good drought resistance did well in SADCC nursery tests and appear to have good yield potential in Egypt and Sudan but reliable developing country (DC) yield data are sometimes hard to get. Observations will be

available in 1985 from Sudan, Niger, Senegal, Egypt, Cape Verde, and Mexico if seed shipments arrived on time. Some information will be available from drier sites in the Dominican Republic.

A number of the high yielding stress resistant lines are B lines. The A line conversion process was started prior to the arrival of Professor Andrews and is being continued with him. It is too early to say whether or not good stress resistant A lines can be developed for DC's. Some of the stress resistant B lines as well as R lines will be released to commercial companies within a year.

Future Usable Results

Cool night seed set problems. The influence of night temperature on seed set and yield was tested with greenhouse and growth room plants at both floret differentiation (FD) and FD + 7 days. Plants exposed for one week at 17 degrees Centigrade (about 6 degrees centigrade below optimum) at FD did not suffer a yield reduction even though pollen fertility was reduced 9 percent. Plants similarly exposed at FD + 7, however, suffered a 34.5 percent yield reduction and a 37.8 percent reduction in seed number which was partially accounted for by a 49.8 percent reduction in pollen fertility compared to 23-degrees-centigrade plants. Anther wall development and sporogenous cell formation was normal as was meiosis. Post meiotic stage development was abnormal. The tapetum was normal but microspores were dissociated from the tapetum and were shriveled and eventually locule shrinkage occurred. A little later the tapetum became dilated with a ring of callose tissue around it. Anthers sometimes assumed a rod shape similar to their appearance in male sterile sorghum lines.

Similar experiments were done elevating the temperature to 6 degrees centigrade above the near optimum 23 degrees centigrade night temperature. Microsporogenesis was normal, as at the lower temperature also, under the FD stress up to meisosis. Microspores (MS) past the tetrad stage were dissociated appreciably from the tapetum. Yield was reduced 63.4 percent and seed number was reduced 67.7 percent. Pollen sterility was increased 59.5 percent compared to the 23 degrees centigrade night temperature. No pollen sterility increase was noted at FD + 7 and the grain yield reduction trend (-16.4 percent) was not significant.

Abnormalities in megasporogenesis were not noted in FD treatments but the 17 C FD + 7 treatment caused a 30 percent ovule abortion compared to 33

percent ovule abortion at 29 degrees centigrade. Separation of the integuments occurred at the micropylar end followed by degeneration of the mucellus at the chalazal end leading to collapse and abortion of the ovule just prior to or at the point of anthesis. Elevated temperature induced multiple stigmas in 8% of the florets and also caused callose plug formation in pollen tubes growing down the styles, caused callose deposition in pollen grains and caused swollen pollen tubes all of which induced self incompatibility.

These investigations further pinpoint the specific times of preanthesis stress damage and represent a step in defining the nature of stress damage in both high altitude cool climates as well as hot lowland climates. Plant breeders may eventually be able to use this information to devise better stress screening techniques.

Cool temperature growth variability. Corn production fails in many high altitude areas because rainfall is too low to support corn. Rainfall is often adequate to support sorghum but temperatures often too cool to permit adequate sorghum growth rate for typical high elevation short seasons. Prior testing of cool tolerance development at Chapingo, Mexico (elevation of 2,300 M) suggested that 38 day milo (38 M) has rapid growth characteristics (short season genotype) in cool environments and Nyundo has the ability to set seed under cool conditions. Progeny of (Nyundo x 38 M) crosses made at low elevations (Nyundo is a long season genotype) have been variously successful at Chapingo. Experiments were run to test the influence of two temperatures on time to panicle initiation (PI) and anthesis in 38 M, Nyundo, crosses of the two, DK 28 (an early commercial) three other check sorghums and corn (B73 x MO17). The growth room temperatures used were 35/22 C and 27/8 C day/night, the latter approximating conditions at Chapingo, Mexico.

The growing degree days (8 C base) required to reach PI (tassel differentiation in corn) and anthesis varied greatly with genotype in the two environments. Corn and 38M reacted similarly in that both required few GDD to reach PI and tassel formation (about 18%) and also anthesis (about 19% less time) under the cool temperature regime (278) than at 35/22. Exactly the opposite is true of all other genotypes which required from 10% to over 100% more GDD to reach the same developmental stages at 35/22. Perhaps plant breeders should consider 38 M or similar germplasm sources in

their breeding programs for fast growth characteristics in short season breeding programs for fast growth characteristics in short season cool environments despite the difficulties in working with it. 38 M appears to be burdened with genetic linkages which are difficult to break. Segregates from crosses often are either nearly obsolete 38 M types or bear little resemblance to it at all.

Considerable selection research on good temperature germination and early growth is being conducted for high elevation cool soils. This will be an ongoing effort for some time. A small effort on growth of seeds imbibed in gels before planting is underway.

Carbon balance research. Since night temperature can influence yield substantially, methodology was devised to isolate the aerial plant from soil CO_2 fluxes in order to accurately measure aerial plant respiration at night as influenced by temperature and to measure photosynthetic carbon uptake in the daytime. An effort will be made to correlate carbon balance with grain yield. These measurements also make possible the determination of instantaneous water use efficiencies (H_2O transpired/CO_2 fixed) at critical growth stages. Preliminary results show that WUE definitely varies during the day, usually being higher in the morning than in the afternoon.

Evaluating overall drought resistance. Thirteen sorghum genotypes were grown under the line source irrigation system at Yuma, Arizona cooperatively with the University of Arizona. This was done primarily to further evaluate the drought resistance of these genotypes under a stressful environment, to compare the responses to our evaluation by other methods and relate to the origin of the sorghums. The growing season at Yuma had more rainfall than normal, but still considerable stress developed. Yield data were not possible because of bird damage, however, drought resistance was evaluated by measuring development of viable heads down the row as distance from the line source increased. Table 4 shows the results of the 1984 Yuma tests.

The results agreed well with previous tests for relative drought resistance of these sorghums. The sorghum SC 90 has consistently shown high drought resistance, although it has low yield potential. Sorghum 121, selected from NP9BR, was previously reported to be drought resistant and to have a deep root system. Currently, a selection from this line, with a particularly well developed, deep root system is being grown in tubes for further selection for the deep rooting characteristic.

Root growth and water use. A set of twelve sorghum genotypes were also grown hydroponically in plastic tubes for evaluation of several parameters of growth and development, including root growth for maximum depth potential, dry weight, and water use efficiency. This set of sorghums was previously evaluated by A. Dobrenz, University of Arizona, and also grown under a line source irrigation system at Yuma, Arizona, except Tx432, which was evaluated at Texas A&M University. Table 5 gives the partial results of this experiment (all parameters measured are not reported here). Significant differences were found among these sorghums for depth of rooting, root dry weight, and water use efficiency, both when well watered and when water stressed. However, the potential for rooting as measured did not necessarily agree with the field ranked drought resistance. It was evident that rooting depth increased with water stress generally, but overall genotypes total root weight decreased when they were water stressed. That is, the root system became longer but thinner. There were some significant differences in WUE, with a trend toward the most efficient under stress to be the most resistant in the field.

Tolerance of P. millets compared to sorghums. In another experiment, a group of landrace pearl millets and sorghums selected from different rainfall areas of India (millet), Sudan and Mali, were grown hydroponically in tubes and drought stressed at approximately four weeks of age with polyethylene glycol-8000 to -5.0 bars water potential. The plants were harvested after another four weeks under stress. Root and shoot growth and water use were measured. The results of this experiment are reported in Table 6. When the entire root system was evenly stressed as in this treatment, there were no marked differences in response related to the origin of rainfall area of the genotypes. It was apparent that the stress affected the millets more than the sorghums. This was in confirmation with previous results reported by Blum and Sullivan (1984) for these same millets and sorghums, when it was postulated that this was further indication of the drought avoidance nature of the pearl millets which is apparently important in their overall drought resistance. The number of roots developing under stress was reduced about 50 percent in both the millets and sorghums. Water use efficiency was somewhat higher in the sorghums than the millets, generally. There were some differences in WUE among genotypes but the differences were not great, nor were the most efficient associated with low

rainfall areas. The lower WUE of the millets may again be related to drought avoidance characteristics compared to higher cellular tolerance by the sorghums, as reported by Sullivan (1972, Sorghum in the Seventies). Root weight was markedly reduced about 70 percent by the stress in both sorghums and millets. Whereas, maximum depth of rooting was generally unaffected in the sorghums. The loss of weight was believed to indicate a reduction in finer root branching under stress. It was noted that shoot:root ratios were reduced about 30 to 40% in both the sorghums and millets.

Glossy lines. Results on studies of glossy and nonglossy sorghums and millets by Traore showed that the glossy leaves have a higher rate of cuticular water loss following stomatal closure than nonglossy types. Seedling drought resistance on this basis would be questioned.

Effects of abscisic acid. Traore confirmed that with the field grown plant under drought stress, that foliar spraying with abscisic acid significantly increased yields of some genotypes. The response was less with the more drought resistant genotypes, as for example, SC 90 from Mali, which is expected to have a higher inherent endogenous level of abscisic acid produced under stress.

Networking Activities

- Plant breeding workshop at CIMMYT. Stalk rot conference in Italy.
- Research Investigator Exchanges - INTSORMIL research program and plans for increased physiological research in Mali were discussed with Dr. Zana Sanogo, Director, DAR, IER Mali. A record round of water use efficiency research has been discussed with Dr. Saeed Farah emphasizing water-stress screening, the influence of N nutrition and the influence of rotations on water use. Carbon balance, transpiration and WUE cooperative experiments have been set up with D. Seetharama at ICRISAT.
- Germplasm was shipped to Sudan, Senegal, Mexico, Niger, Egypt, Texas A&M University, and Purdue University. Research information exchange has occurred with a variety of nations both in and out of INTSORMIL.

- Research equipment - An infrared thermometer was bought from NU-16 funds for use in Mali for physiological research and plant

screening for drought and high temperature response. Several equipment and repair items were purchased for Dr. S. Farah in Sudan (Neutron probe repairs, truckster repairs, etc.).

Travel

- Sudan. August, 1984. Cooperative water stress and preliminary nitrogen response work.
- Sullivan and Traore attended annual meetings of the American Society of Agronomy, Las Vegas to discuss research results with other scientists and to meet with the U.S. Malian coordinator on plans and needs for expanded physiological research in Mali.
- Garden City, Kansas. July, August, September, 1984. Stress screening nurseries.
- Las Vegas, Nevada. November, 1984. Presented a paper on stress induced damage to microsporogenesis and megasporogenesis at the American Society of Agronomy.
- Lubbock, Texas. March, 1985. Attended the INTSORMIL-SICNA meetings.
- Chillicothe, Texas. March, 1985. Arranged for stress test plots.

Publications and Presentations

Publications

Blum, A., and C.Y. Sullivan. 1985. The comparative drought resistance of land-races of sorghum and millet from dry and humid regions. I. Growth and water relations. (in review)

_____ 1985. The comparative drought resistance of land-races of sorghum and millet from dry and humid regions. II. Leaf-water desorption characteristics. (in review)

Dhopte, E.M. 1984. Influence of night temperature of and megasporogenesis in *Sorghum bicolor* (L.) Moench, Ph.D. dissertation. University of Nebraska, Lincoln, Nebraska.

Dhopte, A.M., and J.D. Eastin. 1984. Influence of night temperature on microsporogenesis and megasporogenesis in *Sorghum bicolor* (L.) Moench. Agron. Abst:102.

Garrity, D.P., C.Y. Sullivan, and D.G. Watts. 1984. Rapidly determining sorghum canopy photosynthetic rates with a mobile field chamber. Agron. J. 76:163-165.

_____. 1984. Changes in grain sorghum stomatal and photosynthetic response to moisture stress across growth stages. Crop Science 24:441-446.

Eastin, J.D., and Kit-Wah Lee. 1985. Sorghum bicolor. In (A.H. Halevy, Ed) Handbook of Flowering. Volume IV, pp. 367-375. Chemical Rubber Co. Press, Inc. Boca Raton, Florida.

Eastin, J.D., and C.Y. Sullivan. 1984. Environmental stress influences on plant persistence, physiology, and production. In Physiological Basis of Crop Growth and Development. Am. Soc. Agron. and Crop Sci. Soc. Am., Madison, Wisconsin, p. 201-236.

Eastin, J.D., C.Y. Sullivan, J.M. Bennett, H.M. Dhopte, T.J. Gerik, V.A. Gonzalez-Hernandez, K.W. Lee, V. Ogunlela, and J.R. Rice. 1984. Sorghum sensitivities to environmental stress. In Sorghum Root and Stalk Rot, A Critical Review. pp. 131-143. International Crop Research Institute for the Semi-arid Tropics. Patancheru, India.

Livera-Munoz, M. 1985. Physiological responses of sorghum to its environment. I. Long term effects of suboptimal temperatures on development. II. Measuring conductance and water vapor and CO_2 exchange in canopies. Ph.D. Dissertation. University of Nebraska, Lincoln, Nebraska.

Otte, C.E., W.M. Ross, C.Y. Sullivan, R.L. Voigt, and F.R. Miller. 1984. Evaluation of R-lines from the sorghum random-mating population NP3R. Crop Science 24:9-12.

Pier, P.A., and C.Y. Sullivan. 1984. Effect of water and heat stress on photosynthesis in sorghum. Agronomy Abstracts, Am. Soc. Agron., Las Vegas, Nevada. p. 114.

Retta, A., C.Y. Sullivan, and D.G. Watts. 1984. Relationships of root length to root dry weight in grain sorghum. Newsletter 27:146-147.

Traore, M., and C.Y. Sullivan. 1985. A study of the effects of exogenous abscisic acid application on sorghum leaves. Proc. 14th Biennial Grain Sorghum Res. and Utiliz. Conf., Lubbock, Texas.

Presentations

Spoke at IANR Expo 85 Field Day, discussing research (including INTSORMIL) and demonstrated use of rain shelter in drought research.

Spoke to Nebraska Sorghum Board members on stress research in greenhouses and controlled environments.

Hosted Nebraska Sorghum Board members on a field tour.

Presented two papers at the American Society of Agronomy meetings.

Hosted groups to numerous field tours including several United States seed companies and delegations from Mali, Senegal, Mauritania, Sudan, China, and Argentina.

Changes in Year 7 Objectives

With the return of M. Traore to Mali, increased cooperative research will be conducted in Mali. Sorghums and millets will be grown in several locations representing different stress levels. Included will be experiments at Cinzana, where a line source sprinkler irrigation system is located which will be utilized to conduct research on stand establishment and seedling drought resistance. Numerous Malian and some introduced genotypes will be tested for germination, seedling vigor, overall seedling drought resistance, and seedling ability to recover from severe drought stress when rewatered. The effects of abscisic acid, presoaked seeds and foliar applications will be tested among other parameters. General screening at more mature ages will be done by infrared thermometry.

A relatively large expenditure from our project will be made on equipment needed to conduct the physiology research in Mali.

Some of the same genotypes will be tested in Nebraska, particularly for root growth and endogenous production of abscisic acid.

Research in Sudan to date has been to initiate screening for stress resistant sorghums, test population and row spacing combinations in a farmer's field and evaluate nitrogen response in a farmer's field. These factors relate to efficient use of water. The above experiments are preparatory to greater cooperative involvement of NU-10 and NU-14 scientists with Dr. S. Farah. A substantial expansion of researching the role of genotype, rotation and N fertilization in increasing water use efficiency is being attempted. Some NU-16 project funds are being used. We need more

Sudan budget money and a PSTC AID grant is being sought. Given the drought and hard currency problems in the Sahel it appears that the problem of efficient use of Sudan's water and soil-fertility resources is a matter overriding nearly everything else and should receive added attention.

Hopefully, research can be expanded with the excellent staff now in place at Chapingo, Mexico, on high altitude research pertinent to high elevations in Latin America and east Africa.

Budget cuts are forcing reduced water stress screening in the United States pertinent to the interests of both developing country and United States farmers. This is a serious reduction in the programs and will slow down continued development of superior drought resistant breeding stocks exposed using our stress screening techniques.

TABLE 1. YIELD RANKS, BLOOM AND HEIGHT DATA FOR SELECTED GENOTYPES IN A 144 ENTRY GRAIN SORGHUM DROUGHT TEST, 1984, GARDEN CITY, KS.

Rank	Genotype	kg/ha	Days to bloom	Ht. cm
1	Ms348 x 3-17724	5810	61	93
2	Tx623 x 820151	5802	70	115
3	Tx623 x 820156	5511	71	130
4	820143	5443	72	123
5	820138	5441	69	128
6	Tx623 x 820146	5362	67	128
7	Tx623 x 820149	5317	69	123
8	Tx623 x 820145	5250	71	118
9	820138	5234	71	128
10	820152	5230	74	118
19	Tx623 x Tx430	4970	69	100
44	Commercial 1	4404	65	95
45	Commercial 2	4389	70	66
51	RS 671	4330	72	90
55	Commercial 3	4302	66	95
61	Commercial 4	4206	73	93
137	Tx430	2545	74	80
139	CK60	2500	67	83
LSD		1806		

TABLE 2. YIELD RANKS, BLOOM AND HEIGHT DATA FOR SELECTED GENOTYPES IN A 144 ENTRY IRRIGATED GRAIN SORGHUM TEST, 1984, GARDEN CITY, KS.

Rank	Genotype	kg/ha	Days to bloom	Ht. cm
1	Whtl x 820158	11011	75	145
2	Whtl x 820152	10738	77	155
3	Tx623 x 820148	10244	69	163
4	Whtl x 820146	10016	76	145
5	Tx623 x 820154	9950	71	163
27	820149	8935	70	155
28	820137	8745	69	163
32	Tx623 x Tx430	8517	68	128
36	Commercial 4	8377	70	118
48	RS 671	7902	75	115
51	Commercial 1	7825	64	120
75	Commercial 3	7207	65	120
89	Commercial 2	6870	67	123
123	TX430	5356	71	103
126	CK 60	5109	68	115
LSD		1787		

TABLE 3. GRAIN SORGHUM HYBRIDS IN THE 1984 PURDUE UNIFORM YIELD NURSERY, WEST LAFAYETTE, INDIANA.

Rank	Genotype	3 replications, 3 row plots Ht#	Bloom	kg/ha		bu/A
1	Tx623 x 820147 1/	71	78	9953		159
2	Tx623 x 820156 1/	77	79	9757		156
3	Tx623 x 820154 1/	74	79	9615		153
4	Tx623 x 820151 1/	75	79	9447		151
				9693 2/	$\bar{x}$	155 2/
5	Tx623 x 80052241	60	80	8716		139
6	A7905 x 7366	57	80	8250		132
7	A7905 x Tx433	57	78	8250		132
8	A8104 x Tx434	59	79	8195		131
				8353 3/	$\bar{x}$	134 3/
9	Tx623 x Tx432	64	80	8082		129
10	Tx378 x Tx430	58	78	8005		128
11	Tx399 x Tx430	49	76	7866		125
12	A8105 x Tx434	60	82	7433		119
13	PUGP74 x P-CS3541-22	66	77	7174		115
14	Tx378 x Tx433	58	80	7147		114
15	PUGP74 x P-CS3541-5	63	77	6698		107
16	Tx623 x Tx430	56	77	6675		106
17	RS671	47	78	6446		103
18	PUGP74 x P-CS3541-7	66	73	6375		102
19	RS626	49	71	5795		92
20	KS57 x AR 3031	48	68	5459		87
21	Tx2746 x AR 3031	44	78	4106		65
$\bar{x}$				7100 4/	$\bar{x}$	113 4/
LSD .05				914		14.6

1/ Nebraska pollinators (B lines)

2/ $\bar{x}$ of hybrids 1-4

3/ $\bar{x}$ of hybrids 5-8

4/ $\bar{x}$ of hybrids 5-21

$$\frac{\text{NE pollinator hybrids} - 155}{\text{Hybrids 5-8} \quad 134} = 1.16 \text{ or } 16\% \text{ superiority}$$

$$\frac{\text{NE pollinator hybrids} - 155}{\text{Hybrids 5-21} \quad - 113} = 1.37 \text{ or } 37\% \text{ superiority}$$

TABLE 4. RESPONSE OF SORGHUMS TO DROUGHT STRESS GROWN ON AN IRRIGATION GRADIENT AT YUMA, ARIZONA.

Sorghum	Origin	Percent of Maximum Row Length (18 m) with Heads Developed	No. Reps
SC90	Mali	100	3
SC253	"	83	"
SC265	"	95	"
SC283	"	72	"
SC296	"	67	"
RS626	U.S. (check)	95	"
160	Select. from NP9BR	83	2
9	" "	100	"
22	" "	95	"
103	" "	100	"
266	" "	78	"
121	" "	100	"
126	" "	90	"

Table 5. Maximum root depth, total root dry weight, and water use efficiency (WUE) of well watered (Controls) and drought stressed sorghums grown hydroponically and field drought resistance rank.

Sorghum	Root Depth (cm.)		Root Dry Wt. (g.)		WUE (g/L)		Field[1] Rank
	Controls	Stressed	Controls	Stressed	Controls	Stressed	
RS610	79.8 a*	105.7 ab*	11.9 abc*	10.1 ab*	3.9 ab*	4.6 a*	R
Custer	75.7 ab	99.1 abc	17.2 a	9.9 ab	4.4 ab	4.0 bc	S
B35-6	74.9 ab	105.1 ab	15.8 ab	10.9 a	4.2 ab	4.1 bc	I
Tx7000	71.0 abc	105.1 ab	14.3 abc	10.5 ab	5.2 a	4.3 abc	S
81M571	70.7 abc	110.7 a	16.8 a	11.3 a	4.5 ab	5.1 a	R
7078	70.3 abc	94.4 bc	10.9 bc	7.6 bc	3.8 b	3.5 c	I
81M392	67.0 bc	96.4 abc	4.9 d	6.4 c	3.5 b	3.4 c	R
SC599-6	66.9 bc	97.6 abc	9.8 cd	8.4 abc	4.3 ab	3.7 bc	S
81M450	65.4 bc	99.3 abc	9.4 cd	6.7 c	3.9 ab	3.7 bc	R
81M438	63.1 bc	88.2 c	10.1 cd	7.7 bc	4.4 ab	3.7 bc	R
PI170797	59.9 c	96.0 abc	12.5 abc	8.7 abc	3.3 b	4.1 bc	R
Tx432	58.7 c	98.7 abc	8.8 cd	8.4 abc	3.5 b	3.7 bc	R
Means	68.6	99.7	11.9	8.9	4.1	4.0	

*Means followed by different letters in a column are different at the .05 level of significance according to Duncan's Multiple Range Test.

[1]R = Drought Resistant, S = Drought Susceptible, I = Intermediate Resistance.

Table 6. Effects of drought stress induced with polyethylene glycol 8000 (PEG-8000) to -5.0 bars water potential on hydroponically grown sorghums and pears millet root and shoot growth and water use efficiency (WUE), compared to well watered, nonstressed controls. Values are means of three replications.

Millet	Origin	Annual Rainfall Area(mm)	Maximum Root Depth		No. Roots Developed		WUE (g/L)[1]	Roots Dry Wt. (g.)		Shoot/Root	
			Controls (cm)	Stressed (cm)	Controls	Stressed	Controls	Controls	Stressed	Controls	Stressed
SAR 170	India	220	72	36	39	18	5.3	9.7	2.2	2.3	1.3
SAR 289	"	230	79	Died	37	--	6.4	6.5	1.0	2.7	1.5
SAR 116	"	590	91	68	34	16	4.5	6.6	1.4	2.9	2.5
SAR 1435	"	700	65	84	29	20	5.5	6.6	1.4	2.4	1.9
SAR 2387	"	1050	74	Died	30	--	5.5	7.0	2.5	2.6	1.8
Means			76.2	62.7	33.8	18.0	5.4	7.3	1.9	2.6	1.8
Sorghum											
Safra	Sudan	500	94	97	30	15	7.3	7.9	1.2	2.7	1.5
Ajebsido	"	500	89	85	40	18	7.0	12.2	3.3	3.4	2.2
Korky	"	600	89	90	36	21	6.8	9.4	3.8	2.5	1.6
Gadam	"	650	112	121	32	17	8.0	11.2	3.6	3.3	2.6
Dabar	"	650	91	76	28	14	7.4	10.0	3.8	3.1	2.0
Kulum		770	87	102	32	18	7.8	8.3	2.6	3.6	1.7
Means			93.7	95.2	33.0	17.2	7.4	9.8	3.1	3.1	1.9
CSM 228	Mali	350	109	88	28	14	7.5	9.5	1.5	2.6	2.3
CSM 63	"	350	131	109	36	21	7.7	15.2	4.7	2.5	1.5
CSM 414	"	600	112	109	40	15	7.4	11.9	1.5	2.9	1.6
CSM 192	"	600	108	119	35	17	7.7	8.7	3.3	3.0	1.9
CSM 388	"	1000	118	110	37	16	6.9	8.7	2.6	2.7	1.7
Means			115.6	107.0	35.2	16.6	7.4	10.8	2.7	2.7	1.8

[1]WUE of stressed plants was not obtained due to water absorption by the PEG from moist aeration air.

Agronomic Research on Sorghum and Millet in North Kordofan, Sudan

Project KSU-1-1

Tareke Berhe

Kansas State University

Summary

Three years of experience in Sudan have proved to be successful despite occurrence of extremely dry conditions in each of two years.

It is recommended that continued research support be provided in Sudan via the INTSORMIL Sorghum/Millet CRSP.

Institutions

Collaborating Host Country: Sudan

U.S.: Kansas State University, Fort Hays Branch Experiment Station, Hays, Kansas, and Washington State University.

Linkages:

- Collaborative effort with Western Sudan Agricultural Research Project.
- Agricultural Research Corporation, Wad Medani.
- Regional Ministry of Agriculture, El Obeid.
- ICRISAT.

Ecogeographic Zone Most Benefited by Research

Niger

Objectives, Research Procedure, and Production/Utilization Constraints

Sorghum/Millet Constraints

The constraints to productivity include climatic, edaphic and biological factors. The climate of sorghum and millet producing regions has low and erratic rainfall. Variability from year to year is great. Solar radiation is high due to the extensive number of cloudless days. Humidity is low, resulting in high potential evapotranspiration rates.

The crop year 1984 was very dry in north Kordofan, Sudan, with a mean of 129 mm effective rainfall in the project area. Consequently, most crops including INTSORMIL's experiments at three sites, failed.

Two important facts stood out as a result of the severe drought: 1) The campaign for early maturing, drought tolerant genotypes of millet and sorghum is being recognized and echoed by everyone concerned, and 2) the

early, bristled variety "Ugandi," which has been promoted, did prove to be superior to the local types under the year's harsh environmental conditions. Furthermore, the Hageen Dura hybrid sorghum developed by ICRISAT/Sudan was also found to be early maturing, drought tolerant, and well-adapted to both the clay and sandy soils of north Kordofan.

The Regional Ministry of Agriculture is trying to obtain seed of Ugandi or other early varieties, and Hageen Dura in large quantities for distribution.

Year 6 Objectives

Previously, an AID sponsored project, with Washington State University as the lead institution, was initiated in rainfed areas. The constraints outlined above were identified prior to the commencement of this project. El Obeid, Sudan, was chosen as a site for conducting research relative to these constraints.

Genotype selection was selected for study. These have been tested and selected for one or more of the following qualities:

a. Yield potential
b. Stand establishment
c. Wide adaptability
d. Resistance or tolerance to pests
e. Possible compatibility for intercropping with other crops.

The crops tested are pearl millet, sorghum, groundnut, sesame, chick pea, dry beans, cowpea, and tepary bean. Variety trials for pearl millet and sorghum were planted at 12 locations on sandy and sandy-clay soils. The objectives of these trials were to compare for adaptation, stand establishment, drought tolerance, pest tolerance, response to low levels of N and P fertilizer, and grain yield.

The intercropping trials are cereal-cereal (sorghum/millet), cereal-legume (sorghum and millet with groundnut), and cereal-sesame (sorghum and millet).

The effect of seed size and seed weight on seedling vigor and stand establishment determined that the size and weight of pearl millet and sorghum seed can be increased by removing one-half to two-thirds of the head following anthesis. Seeds obtained in this manner produce more vigorous seedlings than seeds from intact heads.

The study of effect of soil temperature on seed germination will continue.

INTSORMIL has been provided three major research sites where it can cooperate with ARC and WSARP in the El Obeid area on sandy soil—the Banjed Research Station further south on sandy-clay soil and on the new WSARP site near El Obeid.

Research Procedures

The research as organized for 1983 and 1984 and (outlined previously) is to be continued. Where improvement in any of the programs is identified, that project will be expanded and organized to exploit these results.

Project Output

Research Findings

In the second year of this program, demand among the farmers for seed of the pearl millet variety Ugandi was far beyond the seed supply. It has created great interest in the enlarged legume testing program. It has created a demand for crops to have different maturity dates for a better distribution of labor. It has introduced a dwarf hybrid pearl millet from the INTSORMIL/ICRISAT program that has created much interest among farmers, especially in the pearl millet/legume intercropping program.

When programs are to be developed in Kenya and Uganda, this program should be considered. Much of the pearl millet genotypes that are a germplasm source for the breeding programs are of Uganda origin. This not only pertains to the ICRISAT programs, but it is heavily utilized in the Kansas program as well.

Research Progress

In Sudan the spikelet removal technique which has been shown to improve seed size has been applied both to sorghum and pearl millet. Stand establishment, vigor, and yield trials have been conducted.

Mr. A.M. Mohamed of Sudan evaluated 25 millet genotypes, 17 of which were dwarf and 8 tall.

Dwarf seedlots had significantly higher seed weights and longer radicles than the tall lots, but the germination index indicated that taller genotypes germinated faster.

All laboratory variables indicated that taller genotypes germinated faster. All laboratory variables, except radicle and coleoptil lengths

showed variation among the tall genotypes. This indicates a possible potential for selecting superior genotypes for seedling characteristics.

Field studies showed no depth by genotype interaction effect on emergence due to planting not being deep enough.

Planting depths at 12 cm indicated that taller genotypes showed higher percentage emergence and establishment and also reached 20 percent emergence sooner than dwarf seedlots.

Improvement in adaptation of the various crops being tested will be measured by stand establishment, drought tolerance, pest tolerance or avoidance, response to fertilizer, and grain yield. The response to the cultural practices, i.e., intercropping, will be measured against sole crop response. Local farmer acceptance of new genotypes or cultural practices will be the real test of the success of the research effort.

Networking Activities

Dr. Berhe attended and participated in the WSARP/ARC/CIMMYT Second Farming Systems Research Workshop at Wad Medani during the period January 19-24, 1985.

Travel

- T. Berhe traveled to the United States to participate in reviews of the INTSORMIL Collaborative Research Support Program and to participate in the February 13-21, 1985, Principal Investigators Workshop at Lubbock, Texas.

Publications and Presentations

Berhe, T. Prepared Progress Report No. 5, the Annual Report for 1984.

Attended and participated in the WSARP/ARC/CIMMYT Second Farming Systems Research Workshop at Wad Medani during the period January 19-24, 1985.

Pictures were provided and information was furnished relative to INTSORMIL's agronomic activities in North Kordofan to Agricultural Seminar Organizers at Bara, N. Kordofan.

A seminar was presented on the role of the KSU INTSORMIL Project in north Kordofan to representatives of the International Donors Agencies situated in El Obeid.

Changes in Year 7 from Year 6

It is difficult to state precisely what changes might occur. Dr. Tareke Berhe was reassigned in late July to a research location near Kadugli. His previous activities in the El Obeid area were being continued by persons trained in part by Dr. Berhe.

Meanwhile Dr. Berhe has reported excellent results for 1985 crop trials in the Kadugli area.

Dr. Berhe has indicated his desire to return to the United States for six months commencing later this year (1985). Likewise his research assistant, Mr. M.S. Mohamed, expects to come to the United States to pursue the Master of Science degree in agronomy at the University of Nebraska.

Mechanisms of Resistance to *Striga* in Sorghum

Project PRF-10

Thomas Housley

Purdue University

Other Researchers

Host Country:

Dr. A.D. Hamdoun (Sudan - Director Sudan *Striga* Project)

Dr. A.M. Nour (Sudan - Sorghum Breeder)

Dr. F. Bebawi (Sudan - Professor, University of Khartoum, Shambat)

Dr. C. Parker (United Kingdom - WRO)

U.S.:

Dr. L.G. Butler - Purdue University

Dr. J. Axtell - Purdue University

Dr. G. Ejeta - Purdue University

Summary

In this project the potential contribution of root growth to *Striga* resistance was investigated. Initially, the root growth for several resistant and one susceptible sorghum cultivar was compared. The resistant cultivars were Framida, N-13, IS-9830, Tetron, and P-967083; the susceptible cultivar was Dabar. The root lengths for the plants were variable. Dabar had root lengths and root surface areas that were not different from the resistant cultivars. The resistant cultivars, Framida and N-13, had root lengths significantly greater than the resistant cultivar P-967083. It appears likely that the growth of the roots of P-967083 may contribute to its resistance. The smaller root system would reduce the number of parasite-host root interactions and thereby avoid *Striga* infestation. We have planted Framida, Dabar, and P-967083 in the field to see if we can duplicate these results. Root surface area which may also impact the interaction of *Striga* and the host plant was less significantly different than root length. However, P-967083 had significantly less root surface area than did Framida.

Root length measurements are difficult and time consuming to make. In hopes that measurements of leaf area might be an indicator of root length, the leaf areas of the above cultivars were compared. Unfortunately, the significance found was related to the growth rate of the cultivar and was not necessarily related to the length of the roots. IS-9830 had a

significantly greater leaf area than all other cultivars. Since IS-9830 is the earliest maturing of the cultivars, this was not unexpected. N-13 and P-967083 produced significantly less leaf area during the test period. These results suggest that the development of leaf area cannot be used as a predictor of root growth.

Institutions

Collaborating Host Countries: Sudan: Gizera Agricultural Research Station, Agricultural Research Corporation, Wad Medani; University of Khartoum, Shambat, Khartoum. United Kingdom: Weed Research Organization, Oxford, England. United States: Agronomy Department and Biochemistry Department, Purdue University

Linkages:

- Contacts made through Sudan Country Coordinator, Dr. A. Kirleis, with Dr. Hamdoun, Sudan coordinator of the Sudan *Striga* Project.

Ecogeographic Zones Most Benefited by Research

East and West Africa primarily

Objectives, Research Procedures, and Production/Utilization Constraints

Sorghum/Millet Constraints

Striga hermonthica is a serious weed pest in Sudan and other countries of Africa. When it is a pest, 60 percent to 70 percent reductions in crop yields are possible. In the United States, *Striga asiatica* is controlled by herbicides, ethylene fumigation, and application of fertilizer. These measures for control are not available to the subsistence farmers of Africa. Breeding cultivars resistant to the parasitism of *Striga hermonthica* is the most promising approach to achieve control for the small scale farmer. *S. hermonthica* is self incompatible and as such is likely to eventually overcome the resistance of sorghum cultivars. Resistant germplasm may only represent a short term solution for control of the pest, but several cultivars and lines of sorghum have been identified which possess resistance to *Striga*. If we can identify differing mechanisms for resistance, it may be possible to amplify the resistance by gene pyramiding in a breeding program.

Year 6 Objectives

1. Evaluate the growth of roots as a mechanism of sorghum resistance to *Striga*.

2. Evaluate the chemotropic effects of resistant cultivar roots on the growth of Striga as a mechanism for resistance.

3. Evaluate the influence of IAA on root growth in susceptible and resistant cultivars of sorghum and on the rots of Striga.

Research Procedures

Procedures for measuring the area of roots in the resistant and susceptible lines: Root length was measured by using the line intercept method of Tenant on roots grown in a Raub silt loam in pots in the greenhouse. There was no opportunity to check our results in the field under this project, although I have a student who has collected samples from the 1985 crop year.

Problems Regarding Achievement of Objectives

The short time period of the grant was the primary problem regarding the achievements. We were unable to establish the host country cooperative research necessary to develop progress on objectives 2 and 3.

Project Output

Research Findings

Root growth for several resistant and one susceptible sorghum cultivar was compared. The root lengths for the plants were variable. Dabar, the susceptible cultivar, had root lengths and root surface areas that were not different from the resistant cultivars. The resistant cultivars Framida and N-13 had root lengths significantly greater than the resistant cultivar P-967083. It appears likely that the growth of the roots of P-967083 may contribute to its resistance. The smaller root system would reduce the number of parasite-host root interactions and thereby avoid Striga infestation. We have planted Framida, Dabar, and P-967083 in the field to see if we can duplicate these results.

Root surface area, which may also impact the interaction of Striga and the host plant, was less significantly different than root length. However, P-967083 had significantly less root surface area than did Framida. The real importance of these findings will await our field trials.

Root length measurements are difficult and time consuming to make. In hopes that measurements of leaf area might be an indicator of root length, we compared the leaf area of the above cultivars. Unfortunately, the significance found was related to the growth rate of the cultivar and was

not necessarily related to the length of the roots. IS-9830 had a significantly greater leaf area than all other cultivars. Since IS-9830 is the earliest maturing of the cultivars, this was not unexpected. N-13 and P-967083 produced significantly less leaf area during the test period. The results suggest that the development of leaf area cannot be used as a predictor of root growth. Root surface area, leaf area, and fresh shoot weight were compared, but once more it seems improbable that the relationships can be used to estimate root growth.

Travel

- June 23-28, 1985. American Society of Plant Physiology national meeting, Brown University, Providence, Rhode Island. Purpose--to talk with Dr. N. Shah of Dr. Stewart's laboratory in Birbeck College, London, England. He was presenting a paper on "Photosynthesis in Striga hermonthica," and I was interested in talking to him about work on Striga being conducted in England. As a result of my trip, Dr. Shah visited Purdue to give a seminar on Striga.

Water Use Efficiency, Intercropping with Legumes, and Tillage of Sorghum and Millet in Botswana

Project KSU-7

L.V. Withee

Kansas State University

Other Researchers

Within Host Country:

D. Carter (INTSORMIL)

W. Youngquist (INTSORMIL)

Mrs. J. Youngquist (Research Assistant, University of Nebraska, Collaborating staff of Content Farm, Sebele)

Within United States:

L.V. Withee (Kansas State University, Principal Investigator)

R.L. Vanderlip (Kansas State University, collaborating)

E.T. Kanemasu (Kansas State University, collaborating)

W. Stegmeier (Kansas State University, collaborating)

Summary

Dr. Carter and Mr. and Mrs. Youngquist arrived in Botswana in April-May of 1984 and have had one growing season in which to work. It was a season with low rainfall (approximately 220 mm) with erratic distribution—the common situation in Botswana. Obtaining equipment and establishing working procedures within the Department of Agricultural Research and at four sites required much time. Results from their research are not available at this time (August 1985). An extensive program of research was undertaken, and the experience gained will be used to modify their program and improve procedures next year.

Excellent opportunities for networking through the Department of Agricultural Research, ICRISAT/Bulawayo, SADCC, and ATIP, the farming systems research/extension project of MIAC with Kansas State University as the lead institution, are present and being used.

In January 1985 four scientists from Kansas State University and one from the University of Nebraska visited the personnel, their research sites and those of ATIP to review the research program, suggest research priorities, and survey equipment needs and opportunities for collaborative research.

Mr. and Mrs. Youngquist will terminate their association with the project in April-May of 1986 leaving Dr. Carter to carry on the entire project. It would be desirable to continue the Youngquists' positions to take advantage of the favorable working conditions for agronomic research.

Institutions

Collaborating Host Country: Department of Agricultural Research, Botswana

U.S.: Department of Agronomy, Kansas State University; Department of Agronomy, University of Nebraska

Linkages:

The INTSORMIL personnel in Botswana and their support is governed by the Memorandum of Understanding between INTSORMIL, the Department of Agricultural Research (GOB), and Kansas State University. The Director of the Department of Agricultural Research, Dr. D. Gollifer, is also chairman of the technical committee for SACCAR. Kansas State University has within Botswana, seven scientists carrying on a farming systems research/extension project called Agricultural Technology Improvement Project (ATIP). The ATIP project is in its third year. Excellent working relationships exist between all parties.

Ecogeographic Zones Most Benefited by Research

The southern ecogeographic zone will be the principal beneficiary of the research conducted in Botswana. The West African ecogeographic zone will also be a beneficiary, particularly the Sahelian areas.

Objectives, Research Procedures, and Production/Utilization Constraints

Sorghum/Millet Constraints

Two major constraints are environmental--low, variable rainfall--and manpower to accomplish an ambitious program.

Year 6 Objectives

INTSORMIL personnel Douglas Carter and Wayne Youngquist were newly established at Sebele, principal research site of the Department of Agricultural Research, this past year. While the northeastern portion of the country received favorable rains, they were inadequate at the three sites where INTSORMIL conducted its research--Sebele, Mahalapye, and

Goodhope. A good deal of energy was devoted to assembling equipment and establishing the working relations with the staff of DAR in Sebele which will lead to greater productivity. The inadequate rainfall led to research results which have large coefficients of variability.

Planned Experiments for 1985-1986

1. Grain yield stability including genotype comparisons, cropping systems, fertility comparisons, water storage, and soil temperature comparisons between fertility levels and water use comparisons.

2. Millet plant density.

3. Genetic parameters of a population of Segaoland sorghum.

4. Crop residue management.

5. Variety testing across environments.

6. Tillage trial - collaboration with ATIP.

7. Seedling emergence - develop technique for screening sorghum for tolerance to high soil temperatures and crusting.

8. Seedling emergence under traditional methods of planting.

9. Continuation of legume-sorghum rotation study.

Research Procedures

A variety of procedures will be used, mostly field plot trials.

Project Output

At this time (August 1985) data collected this past year (the first year) are being assembled and interpreted and are not available.

Better understanding of the environmental factors influencing establishment of crops by traditional and improved technologies will address one of the principal constraints on crop production.

Networking Activities

Money from INTSORMIL NU-15 was forwarded to L. Mazhani, sorghum breeder at Sebele, for purchase in part of an irrigation system to be used for sorghum and cowpea breeding nurseries. Dr. Carter visited the ICRISAT/Bulawayo project site to consult with Dr. L. House. Millet seed was obtained from Dr. W. Stegmeier of Fort Hays Agricultural Experiment Station, Kansas.

Travel

- L.V. Withee, principal investigator, to Gaborone, December 30 - January 16. Purpose was to consult with Dr. D. Carter and W. Youngquist. The trip was in conjunction with Dr. R. Vanderlip, Dr. E. Kanemasu, Dr. A. Biere, all of Kansas State University, and Dr. M. Clegg of the University of Nebraska. Being in the field with the INTSORMIL and ATIP personnel during the growing season to observe established research plots and the operational procedures and problems was valuable in providing realistic insight into factors that constrain farmers in establishing crops and researchers in devising and evaluating technological improvements. It was hoped that we would be able to collectively recognize the constraints and delineate the problems, describe what research might be necessary and possible to do, suggest priorities for research studies, and discuss equipment needs.
- L.V. Withee to Lubbock, Texas, for meeting of principal investigators. February 20-21, 1985.

Changes in Year 7 Objectives

Year 7 objectives are the same as Year 6 objectives with the addition of greater effort given to measuring environmental constraints such as soil temperatures, moisture content of the soil, rate of drying of soil, and study of factors which limit the establishment of crops by traditional and improved methods. Equipment has been purchased to enable better study of environmental factors such as the neutron probe to study moisture relationships and thermocouples and micrologger to study the soil temperatures.

Experience and results from Year 6 will be used to modify Year 7 plans and produce new avenues of investigation.

Plant Breeding

Executive Summary

Over 300 individual selections of sorghum and millet planted in head rows at Yuma, Arizona represent germplasm which definitely displays the ability to perform under limited soil moisture and high temperature conditions. Sixty more drought tolerant entries are in preliminary stages of yield tests and 40 lines are in the advanced stages of agronomic characterization and yield response under drought conditions. The best lines will be released in 1986. (UA-1)

A reliable aluminum tolerance screening technique has been developed in Quilichao, Colombia. Tolerant genotypes produce acceptable yields of grain while susceptible plants die. From over 2,500 lines in the world collection of sorghum, about 400 lines with aluminum tolerance have been identified. A few of these lines have direct use potential in the acid soil areas of tropical South America and Africa while the others can only be used as breeding source material. The National Program of Colombia, ICA, is extensively testing several of the highest yielding aluminum tolerant lines for release in the near future. Improved varieties with aluminum tolerance are also being developed in the breeding program. (MSU-4)

Studies showed that S_1 family selection appears to be the most useful method of recurrent selection in sorghum. Yield gains were reflected in S_1 test crosses, but they were no better than S_1 testing per se. S_1 family testing also was demonstrated to be effective for raising resistance levels to European corn borer. Selection based on male-sterile plants did not indicate any gain. Selection for seed protein content alone resulted in a loss in yield. (NU-15)

Breeding material from a Texas A&M University project is under advanced stages of development in Mexico for utilization in both the highly productive mechanized areas and in the more marginal areas. Sorghums with food quality sufficient for tortilla production have been grown and evaluated for use in a tortilla factory with good results. These food quality sorghums possess drought tolerance and capacity to produce in marginal areas.

In Paraguay, the potential for production and utilization of sorghum is just beginning to be understood. There is a shortage of wheat and a need to

expand the blending of sorghum flour with available wheat flour. The potential is great for both food and feed types. (TAM-21)

Three grain sorghum cultivars have been released in conjunction with the Secretaria de Recursos Naturales (SRN) in Honduras. These cultivars replace old varieties and provide higher yields and better disease resistance. The releases are Tortillero (1983), Catracho (1984), and Sureño (1985). This record is an unequaled accomplishment in the history of the Honduran national sorghum program. (TAM-31)

Ten new sources of genetic resistance to the sorghum midge exist in lines from the Texas A&M sorghum conversion program. Some have levels of resistance as good as the best presently used sources. Preliminary evaluation of the lines in breeding populations indicates that SC572 will transmit its sorghum midge resistance genes to its progeny in a level high enough to be of use.

New tropically adapted lines for greenbug biotype E resistance are in advanced stages of development. Some of the lines have other favorable characteristics in addition to greenbug resistance. Elite lines are being crossed with disease or drought resistant material to produce widely adapted lines with multiple stress resistance. (TAM-23)

The opportunities for developing hybrids from indigenous lines in developing countries were increased by the location of another cytoplasm that might be used to make female parents. Identification of lines with abundant and long trichomes could make possible additional improvement in shoot-fly resistance.

Using plant cell culture methods for sorghum improvement appears very encouraging. A method has been developed to use plant cell cultures to screen sorghum germplasm for potential pre-flowering drought tolerance. Extensive testing is being done to validate the value of this on sorghum breeding improvement programs. (TAM-22)

The major focus of a Purdue University project is to develop high yielding sorghum varieties with acceptable food quality and good nutritional value for utilization in developing countries. A great deal of progress has been made in two areas.

We now understand many of the factors necessary for improving the nutritional value of sorghum through local village processing.

Sorghum flour is less digestible than most cereal flours unless it is processed using local village procedures that have evolved over hundreds of years. We understand the scientific reasons why processing is important. This knowledge will help us modify and improve the traditional processing methods and develop improved methods for utilization in countries where sorghum is used as a feed or food grain.

We have also gained new knowledge about utilization of sorghum populations in breeding programs. Traits such as heritability of grain hardness and seedling cold tolerance are important for both the United States and developing countries. Selection methods for improving these traits have been developed. (PRF-3A)

Progress has been made in identifying superior drought tolerant sources of sorghums that are currently being incorporated in breeding programs both in Sudan and Niger. Efforts toward providing technical assistance in developing a seed industry as well as promoting use of hybrid sorghum seeds in Sudan are making good progress. (PRF-7)

Collaborative research has demonstrated that there is a great deal of genetic diversity for aluminum tolerance in sorghum and more recently in pearl millet. From more than 2,500 lines in the sorghum World Collection, originally collected from acid soils in Africa, 400 ecotypes have been identified as highly tolerant to acid soils of the tropics with toxic levels of soluble aluminum. Most of these lines could be used only as breeding material, but about 25 lines have adequate yield potential for direct use by farmers. The National Program of Colombia (ICA) is extensively testing several of these lines for release as the first aluminum-tolerant variety for the Llanos of Colombia. (MSU-11)

An "adaptation index" for sorghum and millet around the world is being developed and will be ready for use by INTSORMIL scientists this year. The index is intended to supply all INTSORMIL personnel with a guide to the climate in each country where they work, and the types of sorghum and pearl millet which are adapted there.

In addition, INTSORMIL scientists were asked to increase seed for a 12-20 entry international adaptation trial to be planted in up to 200 locations worldwide for adaptation indexing. (TAM-32)

Two pairs of pearl millet cytogenetic male-sterile and maintainer lines were approved for a joint release by KSU/INTSORMIL and ICRISAT. These two

lines are being widely used in India both to make F_1 hybrids and in breeding new male-sterile lines.

Additional progress has been made in improving stalk lodging resistance with the identification of 12 F_4 and F_5 lines that have reduced levels of internode pith disintegration under drought stress conditions. A total of 90 new accessions introduced into the program are expected to contribute increased grain yield and quality, disease resistance and genetic diversity. (KSU-1)

Evaluation and Development of Sorghum/Millet Germplasm for Arid Land Agriculture

Project UA-1

V. Marcarian, A.K. Dobrenz, R.L. Voigt, O.J. Webster, and M. Norem

University of Arizona

Summary

Nine hundred sixty-eight germplasm sources of sorghum and millet were evaluated for their ability to produce seed under extremely high temperatures and low soil moisture conditions at Yuma, Arizona. These entries represented germplasm from many foreign countries and included materials from breeding programs at Kansas State University, Purdue University, the University of Nebraska, Texas A&M University, DeKalb, and the University of Arizona.

Physiological measurements, including leaf temperature, leaf resistance, and transpiration rates, were measured on several of the most promising drought-tolerant sorghum and millet entries from each university.

Cooperative research with Dr. C. Sullivan (University of Nebraska) and Dr. Ed Kanemasu (Kansas State University) was initiated and several scientists from these universities evaluated physiological and morphological attributes of promising drought tolerant germplasm at Yuma, Arizona to determine characteristics which could be used for identification of drought tolerant sorghum and millet. Canopy and ambient temperature differential appears to be useful in identifying drought tolerant germplasm.

Over 300 individual selections of sorghum and millet were planted in head rows. These entries represent germplasm which definitely display the ability to perform under limited soil moisture and high temperature environmental conditions. Sixty more drought tolerant entries are in preliminary stages of yield tests and forty lines are in the advanced stages of agronomic characterization and yield response under drought conditions. The best lines will be released within the next year.

Institutions

Collaborating Host Countries: Cape Verde

U.S.: Sorghum and Millet seed were sent for evaluation in the gradient irrigation system at Yuma by INTSORMIL scientists from the University of Nebraska, Kansas State University, Texas A&M University, Purdue University, and DeKalb. Researchers from Kansas State University and the University of Nebraska spent several days evaluating physiological and agronomic characteristics of their germplasm at Yuma.

Other Countries: Seed was sent to the following countries; August 23, 1984 - Seed of three drought-tolerant sorghum populations and 12 proven drought-tolerant lines sent to Mauritania. August 28, 1984 - Seed of AZ 9504 A & B lines sent to a commercial breeder in Argentina. September 26, 1984 - Seed of AZ 9504 A & B lines sent to a commercial breeder in Argentina. September 27, 1984 - Seed of AZ 9504 A & B lines sent to a breeder in the Republic of China. March 13, 1985 - Seed of one U.S. drought-tolerant population and two bulk populations of Yemen A.R. genotypes sent to Cape Verde.

Ecogeographic Zones Most Benefited by Research

Since most of the areas in the global plan lack sufficient rainfall, our program would help any of the six where more drought-tolerant sorghum and millet needs to be grown.

Objectives, Research Procedure, and Production/Utilization Constraints

Year 6 Objectives

1. Evaluate and identify different sources of sorghum and millet for their ability to produce seed under a wide range of available soil moisture conditions.

2. Increase drought-tolerance levels with appropriate plant breeding techniques that involve recurrent selection at high temperatures and low available soil moisture.

3. Evaluate morphological and physiological attributes of sorghum and millet grown under a wide range of available soil moisture.

4. Evaluate single plant selections, made previously under heat and moisture stress from a random mating population, in head rows and yield tests under stress.

5. Evaluate and increase selections of Yemen and Egyptian parentage for distribution as stress-tolerant genotypes.

6. Evaluate known genotypes in a root-competition study.

Changes in Objectives from Previous Year

Root competition studies have been initiated to evaluate the potential of differential root performance among genotypes under heat and moisture stress. These studies are an addition to previous objectives which have not been changed or dropped.

Additional experiments were planned and conducted with Kansas State University and the University of Nebraska using the gradient system. These experiments were added to improve U.S. collaborative research.

Research Procedures

A line-source sprinkler irrigation gradient system was established at Yuma, Arizona, and used to evaluate the performance of millet and sorghum entries (Figure 1). Nine hundred sixty-eight rows were planted on April 28, 1984. This represented millet and sorghum germplasm from breeders and physiologists at four cooperating universities, private industry, and several experimental lines from Dr. R.L. Voigt's breeding program. Check cultivars included RS-610, TX-7000, TX-7078, SC-599-6, and B-356. Each entry was replicated twice.

The amount of water applied with the gradient system ranged from 650 mm (high water level) to 0 mm (low water level) (Figure 2). Average maximum temperature was over 35 C from June through August 15. (Figure 3)

The sprinkler was installed after each 18 M row was thinned on May 16, 1984. Catch cans were placed at 2 M intervals running perpendicular to the line source and used to determine the amount of water application after each irrigation.

Distance from the line source (highest water level) to the last viable seed producing inflorescence in the low water application area of the gradient was measured on each row in the gradient 75 days after planting. Days to anthesis were recorded for each germplasm.

Plant height in the high and low water areas of the gradient was taken at 54 and 75 days after planting for each entry. Plants were also ranked for vigor on a scale of 1 to 5 at 54 and 75 days after planting.

Transpiration, leaf resistance, ambient and leaf temperature were evaluated on all check cultivars and several germplasm sources from Kansas and Nebraska.

Fertile, phenotypically desirable sorghum and millet genotypes were selected from intercrossed populations that were grown under high temperature and soil moisture stress conditions. Selections were grown in head rows under high temperature and soil moisture stress conditions and evaluated for whole plant and desirable head and maturity characteristics. Desirable rows were identified and seed was harvested. Remnant seed of selected head-rows was grown under non-stress conditions, and 20 heads of similar phenotypes and maturity were used for seed increase, description data and crossing onto steriles for "B" and "R" characterization.

Yield tests of desirable genotypes were also conducted under heat and moisture stress and under optimum conditions to eliminate the poorest performers.

Project Output

A 172 page project report, including all measurements mentioned in the procedure section of this report, has been prepared and distributed to all the cooperating plant breeders and physiologists from Texas A&M University, the University of Nebraska, Kansas State University, and Purdue University. I have taken page 89 from this report to show information on the variation in drought tolerance rank for millet, which was evaluated for Dr. Bill Stegmeier at Kansas State University (Table 1). The dark line for each entry represents the distance from the line source that a particular germplasm source could produce heads in the dry area of the gradient. The longer lines indicate more drought tolerance. Notice that the experimentals 81-1083 x 78-7038 and 81-1163 x 78-7038 were able to produce viable seed producing inflorescences 16 M into the dry area of the gradient. Entry ICP-226 and 230 B X P52-5-1-3 were not drought tolerant and produced heads only four or less meters into the drier area of the gradient. This page represents information that was passed along to plant breeders on how their

moisture areas of the gradient. Page 86 of our report is an example of these data that were evaluated on sorghum entries. This part of the gradient was a cooperative project with Dr. E. Kanemasu at Kansas State University which was designed to evaluate the relationship between canopy temperatures and drought tolerance. Very positive results were obtained from the data collected at Yuma, and it appears that evaluating the difference between canopy and ambient temperatures is a good way to predict drought tolerance in sorghum.

A number of sorghum lines proven to be productive under heat and moisture stress are being increased and characterized for germplasm release.

In the next two years pearl millet lines under development will become available for distribution. Agronomically desirable millet selections from a pearl millet population grown under heat and moisture stress are being re-selected, purified, and evaluated for stress tolerance.

Publications and Presentations

Abbas, M.A., and V. Marcarian. 1984. Effect of intercropping on cowpeas and sorghum. Agron. Absts. p. 97.

Abbas, M., and V. Marcarian. 1984. Effects of various sorghum-cowpea cropping systems on yields of cowpea and sorghum crops. Forage and Grain, pp. 46-47. UA Series P-62. The University of Arizona, Tucson.

Agbary, A., R.L. Voigt, and A.K. Dobrenz. 1984. Genotypic response of several lines of sorghum (Sorghum bicolor (L.) Moench) to water stress. I. Photosynthesis diffusive resistance, leaf temperature and epicuticular wax content. AZ-NV Acad. Abst. p. 45.

Agbary, A., R.L. Voigt, and A.K. Dobrenz. 1984. Genotypic response of several lines of sorghum (Sorghum bicolor (L.) Moench) to water stress. II. Transpiration diffusive resistance, leaf temperature and epicuticular wax content. AZ-NV Acad. Abst. p. 45.

Agbary, A., R.L. Voigt, and A.K. Dobrenz. 1984. Screening for drought resistance in several lines of sorghum. WSCS Abstr. p. 17.

Bimpolo, P., and R.L. Voigt. 1984. Physiological aspects of reduced tillage

Chigwe, C.F.B., and R.L. Voigt. 1984. Performance of NP9BR sorghum progenies under heat and drought. Proc. AZ-Nev. Acad. Sci. Absts. p. 46.

Chigwe, C.F.B., and R.L. Voigt. 1984. Improvement of NP9BR random-mating sorghum population using genetic male sterility. Proc. AZ-Nev. Acad. Sci. Absts. pp. 46-47.

Hofmann, W.C., M.K. O'Neill, and A.K. Dobrenz. 1984. Physiological responses to sorghum hybrids and parental lines to soil moisture stress. Agron. J. 76:223-228.

Ibrahim, D.Y., and V. Marcarian. 1984. Agronomic and physiological characters of pearl millet grown under a sprinkler irrigation gradient. WSCS Abst. p. 11.

Ibrahim, Y.M., and V. Marcarian. 1984. Pearl millet: A potential crop for the Southwest. Forage and Grain, pp. 28-32, UA Series P-62, the University of Arizona, Tucson.

Otte, C.O., W.M. Ross, C.Y. Sullivan, R.L. Voigt, and F.R. Miller. 1984. Evaluation of R-lines from the sorghum random-mating population NP3R. Crop Sci. 24:9-12.

Robinson, D.L., and A.K. Dobrenz. 1984. Evaluation of drought tolerance in sorghum. AZ-NV Acad. Sci. Abstr. p. 46.

Robinson, D.L., A.K. Dobrenz, and V. Marcarian. 1985. Response of grain sorghum to an irrigation gradient system AAAS Abst. p. 27.

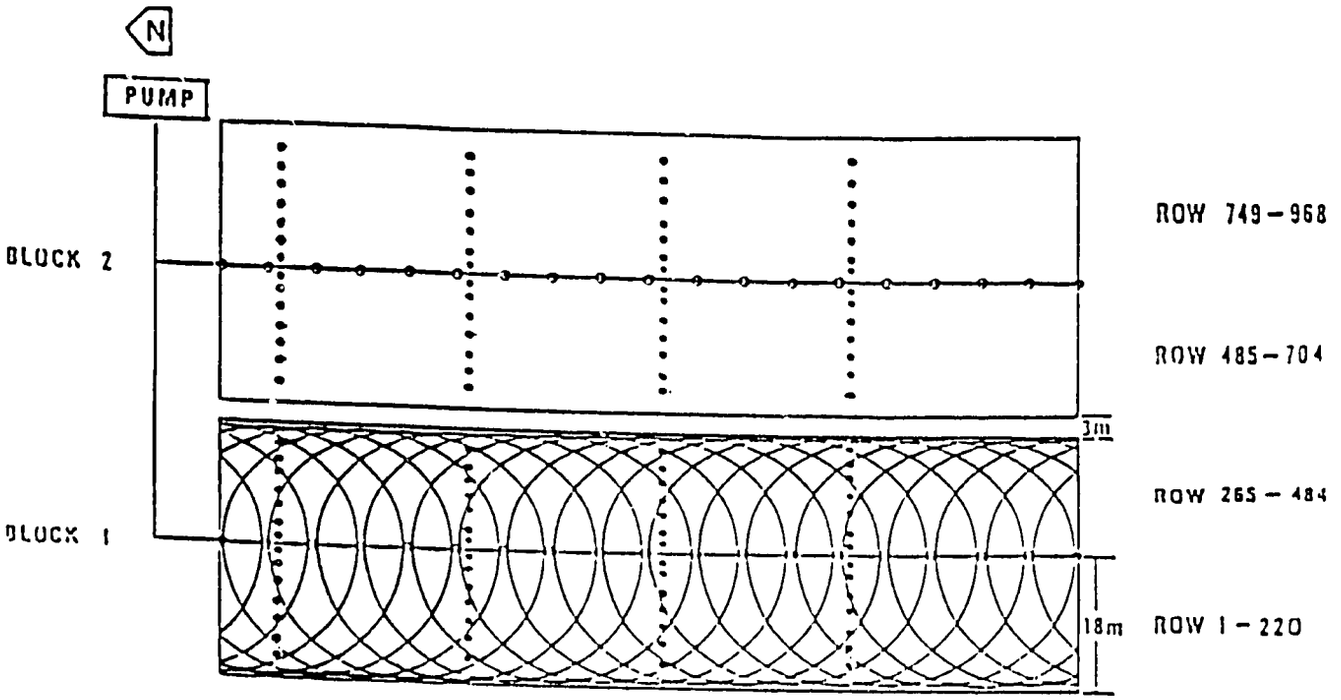

Figure 1. Plan of the sorghum/millet sprinkler irrigation gradient field. Blocks I and II had a sprinkler line, with risers every 6 meters, running down through its center, thus dividing each block into two 18 meter widths. Blocks were separated by a 3 meter alley. Rows 1-220 and 265-484 were in Block I. Rows 485-704 and 749-968 were in Block II. Water application measurements were replicated three times in each block. Water application catch cans were placed on both sides of the sprinkler lines at 0, 1.5, 4.5, 7.5, 10.5, 13.5 and 16.5 meters from the line.

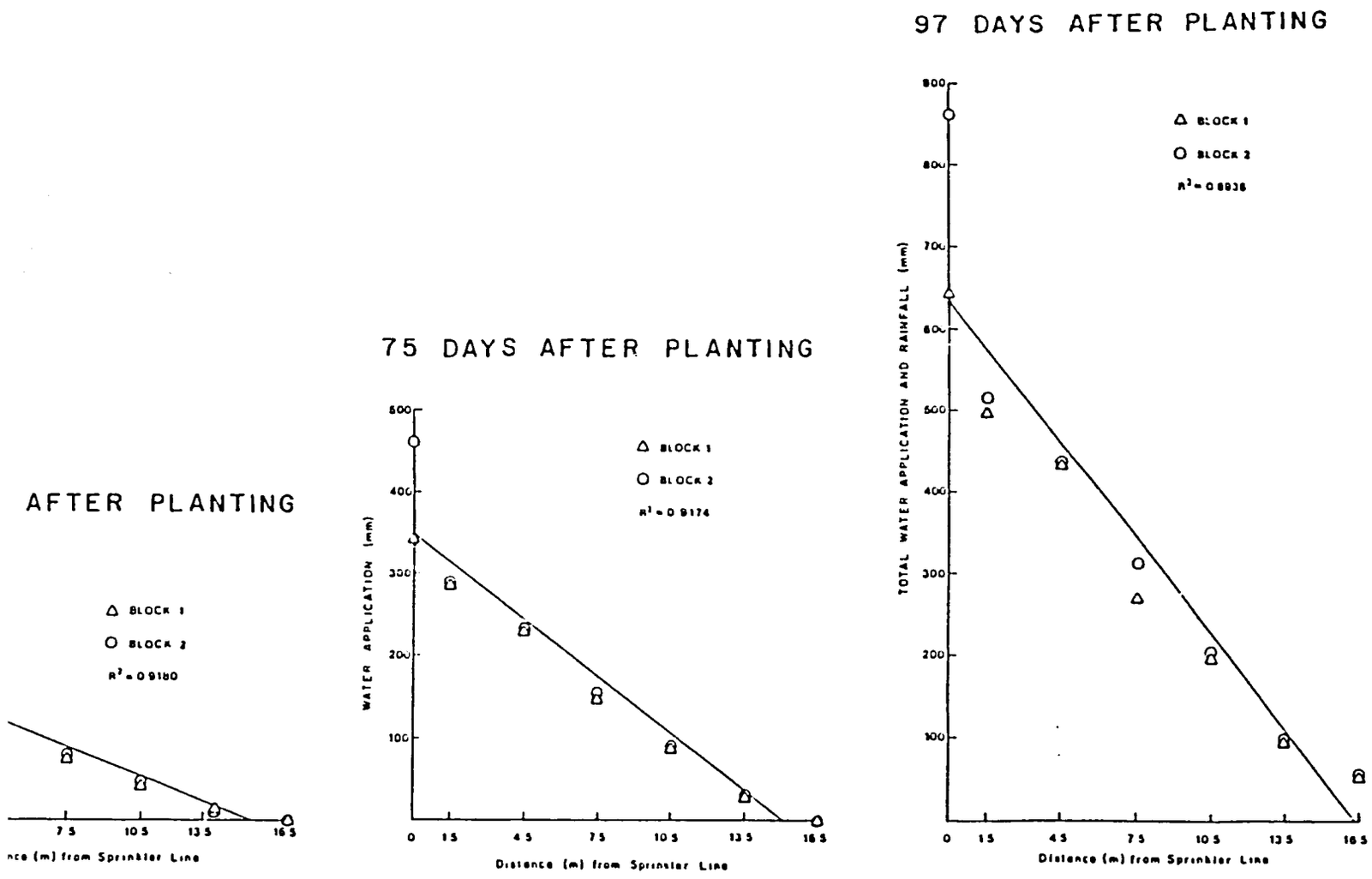

Regression line of total water application for 55, 75 and 97 days after planting for the mean of all sites of both blocks combined at distances of 0, 1.5, 4.5, 7.5, 10.5, 13.5 and 16.5 meters from the line source.

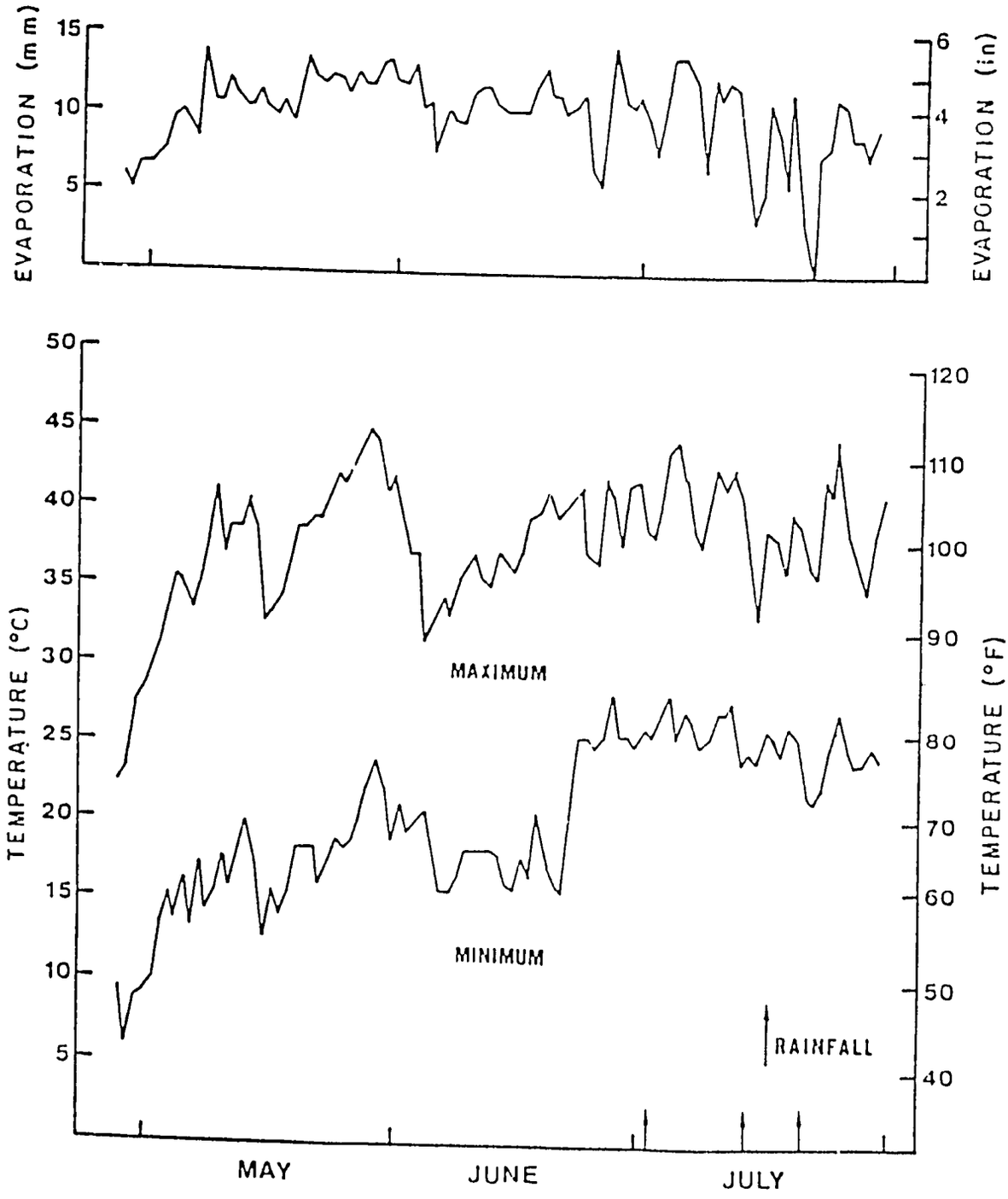

Figure 3. Meteorological data for Yuma, Mesa, Agricultural Experiment Station, Yuma, Arizona from April 28 to August 3, 1984.

Table 1. Page 89 from the University of Arizona Annual INTSORMIL progress report which shows the difference in drought tolerance of Millet Germplasm sources.

KANSAS STATE UNIVERSITY (STEGMEIER): MILLET

ROW (REP1/REP2)	$\bar{X}$ DISTANCE (M) OF VIABLE HEADS FROM PIPE (75 DAYS AFTER PLANTING)	DISTANCE(M) (REP1/REP2)
	0 2 4 6 8 10 12 14 16 18	
412/ 89	1- 81-1083 X 79-1137	16.5/13.5
411/ 95	2- 81-1163 X 79-1137	11.6/13.8
410/109	3- 81-1083 X 78-7038	16.5/16.5
409/ 86	4- 81-1163 X 78-7038	16.5/16.5
408/105	5- 81-1085	4.8/ 5.8
407/ 93	6- 81-1164	6.5/ 9.0
406/ 97	7- 78-7088	15.0/16.5
405/ 75	8- 79-1137	16.5/16.5
404/ 85	9- ICP-220	7.3/12.0
403/107	10- ICP-220	2.2/ 7.5
402/ 91	11- ICP-220	4.5/ 0.0
401/100	12- ICP-226	4.7/ 3.4
400/108	13- ICP-226	6.6/ 0.0
399/103	14- B282 X 3/4 EX BORNUE	10.8/ 5.1
398/106	15- B282 X 3/4 EX BORNUE	7.4/ 5.6
397/ 77	16- B282 X 3/4 EX BORNUE	5.8/ 5.2
396/ 79	17- 230 B X P52-5-1-3	7.1/16.5
395/ 88	18- 230 B X P52-5-1-3	6.6/ 7.4
394/ 94	19- 230 B X P52-5-1-3	11.5/ 8.6
393/ 96	20- 230 B X P52-5-1-3	0.4/ 0.0
392/ 99	21- 230 B X P52-5-1-3	7.9/ 3.1
391/101	22- 230 B X P52-5-1-3	--/ 2.6
390/104	23- K81B	10.1/ 8.3

Table 2. Page 86 from the University of Arizona Annual INTSORMIL progress report which shows physiological data on sorghum grown in the gradient at Yuma, Arizona.

Kansas State University & University of Arizona

Li-Cor LI 1600 Porometer Data 55 Days After Planting

ROW 445 KAZU 11 - C1-46	SORGHUM		
	NO STRESS	STRESS	DIFFERENCE
TEMPERATURES:			
AMBIENT	38.20	38.60	-.40
LEAF	38.00	39.10	-1.10
DIFFERENCE	-.20	.50	.70
LEAF RESISTANCE	1.98	2.03	-.05
TRANSPIRATION	18.08	18.74	-.66

ROW 441 KAZU 12 - 835-6	SORGHUM		
	NO STRESS	STRESS	DIFFERENCE
TEMPERATURES:			
AMBIENT	38.20	38.20	.00
LEAF	37.10	38.80	-1.70
DIFFERENCE	-1.10	.60	1.70
LEAF RESISTANCE	1.74	4.71	-2.97
TRANSPIRATION	19.11	8.64	10.47

ROW 442 KAZU 12 - 835-6	SORGHUM		
	NO STRESS	STRESS	DIFFERENCE
TEMPERATURES:			
AMBIENT	38.40	38.60	-.20
LEAF	37.80	39.90	-2.10
DIFFERENCE	-.60	1.30	1.90
LEAF RESISTANCE	2.59	5.42	-2.83
TRANSPIRATION	13.84	7.66	6.18

ROW 436 KAZU 14 - C9-17	SORGHUM		
	NO STRESS	STRESS	DIFFERENCE
TEMPERATURES:			
AMBIENT	38.60	38.40	.20
LEAF	38.10	39.10	-1.00
DIFFERENCE	-.50	.70	1.20
LEAF RESISTANCE	2.37	2.55	-.18
TRANSPIRATION	15.82	15.64	.18

ROW 426 KAZU 17 - C9-15	SORGHUM		
	NO STRESS	STRESS	DIFFERENCE
TEMPERATURES:			
AMBIENT	40.20	40.40	-.20
LEAF	40.60	40.70	-.10
DIFFERENCE	.40	.30	-.10
LEAF RESISTANCE	2.90	3.53	-.63
TRANSPIRATION	15.77	13.23	2.54

Sorghum Host-Plant Resistance and Genotype Evaluation

Project MSU-4

Lynn M. Gourley

Mississippi State University

Other Researchers

Ms. S. Ann Rogers, MSU-4 Graduate Research Assistant

Mr. Guillermo Munoz, MSU-4 Graduate Research Assistant

Mr. Muhammad Yakub, MSU-4 Graduate Research Assistant

Summary

Resource-poor farmers in LDCs are unable to use large quantities of soil amendments required in high-input grain production technology. Low-input technology used by this project has as a goal to find and/or breed sorghum and pearl millet genotypes more tolerant to the soil constraints instead of changing the soil to meet the plant's requirements. The primary objective of the research conducted in this project is to evaluate sorghum and pearl millet germplasm for tolerance to infertile, acid soils of the tropics. Most of these soils have toxic levels of exchangeable aluminum and some, toxic levels of manganese. Most macro and some micro elements are deficient and water holding capacity in the upper profile of even high clay content soils is limited.

A reliable aluminum tolerance field screening technique has been developed at Quilichao, Colombia. Tolerant genotypes produce acceptable yields of grain while susceptible plants die. From over 2500 lines in the world collection of sorghum, about 400 lines with aluminum tolerance have been identified. A few of these lines have direct use potential in the acid soil areas of tropical South America and Africa while the others can only be used as breeding source material. The National Agricultural Research Program of Colombia, ICA, is extensively testing several of the highest yielding aluminum tolerant lines for release in the near future. Improved varieties with aluminum tolerance are also being developed in the breeding program.

The ultimate goal of the breeding effort is the development of aluminum tolerant hybrids. Our studies have shown that root mass of tolerant hybrids growing in acid soil is nearly always superior to that of the most tolerant parent. Several students have and/or will conduct their thesis research in Colombia or other LDCs using aluminum tolerant seed parents and males to

take advantage of this phenomenon. Conducting the research in their home country benefits the student and the National Program as well as INTSORMIL.

A network of National Program scientists throughout Latin America and more recently Zambia, evaluating tolerant germplasm identified by MSU-4 and MSU-11, has been initiated by this project. Requests for tolerant germplasm from universities, National Programs, and commercial companies are being supplied by this project and MSU-11 in Colombia.

A. Host Country Researchers:

1. South American Ecogeographic Zone:

Colombia:	Dr. Herman Gaviria Echeverri, ICA, Nataima, Sorghum Director
	Dr. Eric Owen, ICA, La Libertad, Soil Scientist
	Mr. Cesar Ruiz, ICA, La Libertad, Breeder
Peru:	Dr. Dale Bandy, North Carolina State University Mission/ INIPA and TropSoils, Lima
	Dr. Luis Alberto Narro Leon, INIPA-Lima, Agronomist
	Mr. Oscar Agreda Turriate, Iquitos, Agronomist
Brazil:	Dr. Robert Schaffert, EMBRAPA-Sete Lagoas, Breeder
	Mr. Renato Borgonovi, EMBRAPA-Sete Lagoas, Breeder and Sorghum Coordinator
	Dr. Gilson Pitta, EMBRAPA-Sete Lagoas, Soil Scientist
Venezuela:	Mr. Hector Mena, FONAIAP, Sorghum Director
	Dr. Oscar de Cordova, CARGILL, Breeder

2. Central America and Caribbean Ecogeographic Zone:

Panama:	Dr. Gaspar Silvera, IDIAP, Subdirector
Mexico:	Dr. Vartan Guiragossian, ICRISAT, Breeder
Honduras:	Dr. Dan Meckenstock, TAM-31 PI, Breeder

3. Southern Africa Ecogeographic Zone:

Zambia:	Dr. Bhola Nath Verma, SIDA, Breeder
Zimbabwe:	Dr. Lee House, ICRISAT/SADCC Project Leader

4. Asia Ecogeographic Zone:

Indonesia:	Dr. Michael K. Wade, TropSoils, Soil Scientist

B. U. S. Researchers:

Mississippi: Dr. Catalino Flores, Plant Breeder and MSU-11 PI (Colombia)

Dr. Henry Pitre, Entomologist and MSU-5 PI

Nebraska: Dr. Ralph Clark, Plant Nutritionist and NU-14 PI

Mr. Dave Andrews, Plant Breeder and NU-15 PI

Purdue: Dr. John D. Axtell, Plant Breeder and PRF-3A PI

Kansas: Mr. W.M. Stegmeier, Plant Breeder and KSU-1 PI

TropSoils: Dr. Douglas J. Lathwell, Cornell University, Brazil Coordinator

Institutions

Collaborating Host Countries: ICA-Colombia, INIPA-Peru, EMBRAPA-Brazil, FONAIAP-Venezuela, IDIAP-Panama, ICRISAT-Mexico, INTSORMIL-Honduras, TropSoils-Indonesia, ICRISAT/SADCC-Zimbabwe, and SIDA-Zambia.

U.S.: Mississippi MSU-11 and MSU-5, Nebraska NU-14 and NU-15, Purdue PRF-3A, Kansas KSU-1 and TropSoils.

Linkages:

We have cooperative research linkages with the National programs ICA-Colombia, EMBRAPA-Brazil, FONAIAP-Venezuela and INIPA-Peru in the major acid soils areas. The linkage with ICA is a strong informal collaborative research effort. ICA has provided land, facilities, personnel and active administrative support at the national level and at the La Libertad and Carimagua stations in the llanos. The only request they have made on INTSORMIL resources is for Al-tolerant sorghum germplasm, technical support and guidance, and future degree training for their young sorghum staff. The linkage with EMBRAPA is a strong and formal collaborative research effort. The main request for support from INTSORMIL that this highly trained group has made is for germplasm, technical guidance and cooperation. The linkages with FONAIAP and INIPA are in the nature of conducting regional trials. Cooperation with TropSoils and CIAT soil scientists extends our limited resources and experiences in Colombia, Peru, Brazil and Indonesia.

The main breeding and selection work is accomplished at CIAT-Palmira and CIAT-Quilichao by the INTSORMIL team and collaboratively at ICA-La Libertad and EMBRAPA-Sete Lagoas.

Uniform regional trials will be conducted, as determined by administrators and researchers at the May 1984 Acid Soils workshop, at the following sites:

Colombia:	Quilichao
	La Libertad
	Carimagua
Venezuela:	El Sombrero - Central Plains
	El Tigre - Eastern Plains
Peru:	Yurimaguas - Amazonia
	Puerto Maldonado - Amazonia
Brazil:	Mocoa (Sao Paulo) IAC
	Sete Lagoas - EMBRAPA
	Felixlandia - EMBRAPA
	Capinopolis - EMBRAPA/AGROCERES
	Araripina - EMBRAPA

Ecogeographic Zones Most Benefited by Research

Since sorghum and pearl millet are generally planted on marginal lands in most countries, those countries with large land areas of acid soils will benefit most from this research. The primary zone of benefit is South America and the secondary zone of benefit is southern Africa. Many other countries in all six ecogeographic zones will benefit from the aluminum-tolerant genotypes developed in this project. Germplasm exchanges from the two major zones of interest will probably take care of their needs at this time.

We are receiving requests for Al-tolerant germplasm from ICRISAT and commercial companies for use in the acid soil areas of Africa. With over 600 million hectares of acid soils in Africa, this is not too surprising. A limited effort is being made with ICRISAT, TropSoils, or other INTSORMIL projects to test proven sources of Al tolerance in Africa, Central America and Asia.

Objectives, Research Procedures, and Production/Utilization Constraints

Sorghum/Millet Constraints

One of the major constraints to sorghum production in South America and Africa is aluminum and manganese toxic acid soils. Al-tolerant germplasm

will increase sorghum and pearl millet production in acid soil areas by requiring fewer soil amendment inputs.

Manganese toxicity appears to be more of an academic problem in Latin America, but one which occupies a very large land area in Zambia and possibly other countries in Africa.

Armyworms are another major constraint to sorghum production throughout the world, but especially in the southeastern U.S., Central and South America.

Many of the sorghum diseases found in Mississippi are also common throughout many tropical LDC countries. Every breeding project must maintain disease resistance as a breeding goal, or after accomplishing the primary breeding objective the material can be rendered worthless by a destructive plant pathogen.

Project Objectives

1. Screen and evaluate sorghum and pearl millet, in the laboratory and field, for sources of tolerance to low pH, and aluminum and manganese toxicity.

2. Incorporate new sources of tolerance to aluminum and manganese toxicity into elite U.S. and LDC sorghum germplasm.

3. Develop armyworm tolerant sorghum genotypes for entomology evaluation (MSU-5).

4. Train selected U.S. and LDC personnel.

Changes in Objectives from the Previous Year

The major change in objectives is the inclusion of pearl millet in the acid soil screening and evaluation. Preliminary results indicate that there is genetic variability for Al tolerance in pearl millet. For both Projects MSU-11 and MSU-4, we estimate a breakdown in commitment of 80% sorghum and 20% pearl millet. We do not foresee an active pearl millet breeding program for acid soils in these projects at this time.

The second major change is not so much in objectives as it is in ecogeographic zones. Through the SADCC-ICRISAT program in Zambia, we have had the request for germplasm and technical support for sorghum and pearl millet research in the acid soil areas of southern Africa. Sorghum and millet production areas in northern Zambia have both Al and Mn toxicity constraints. Zambia is probably the best location to screen sorghum and

millet germplasm for toxic levels of Mn. I recommend that all of the sorghum and millet lines screened in Colombia and identified as having acceptable levels of Al tolerance be screened for Mn tolerance in Zambia. A breakdown in commitment for MSU-4 of 90% in South America and 10% in southern Africa is estimated.

Research Procedures

Various nutrient and greenhouse soil culture screening techniques to determine sorghum tolerance to Al toxicity have been evaluated and compared with various levels of Al saturation in field trials. We will continue to use field trials primarily.

1. A reliable Al-tolerance field screening technique has been developed at CIAT/Quilichao, Colombia. Using an Al-saturation level of 60-65%, susceptible genotypes die and the remaining genotypes range from severely stunted to nearly normal healthy plants. Additional screening of the available world sorghum germplasm is essential to determine the extent of the genetic variability for Al-tolerance. Primary attention should be directed toward the African areas where the best Al-tolerant lines are now being found. These acid soil areas should be the source of the greatest genetic diversity.

2. Recombination of probable different genes for Al tolerance and of other factors such as extensive root system, phosphorus efficiency through mycorrhizae association, and drought tolerance from the best lines available need to be incorporated into elite genotypes. After early testing, Al-tolerant cultivars are crossed to elite U.S. and ICRISAT grain types in recombination and other genetic studies. The pedigree breeding approach is being used with different Al-tolerant sources. Al-tolerant exotic B-lines are being sterilized and used as tester females with Al-tolerant R-lines.

3. Al tolerance is a characteristic which is ideally suited for the random-mating population improvement approach. The susceptible offspring are eliminated from the population and only the tolerant lines contribute their genes to the next generation. This selective advantage can be increased by growing the population on soil with increasing levels of Al saturation. After determination of restorer reaction, the best Al-tolerant sources are being incorporated into B-line or R-line random-mating populations containing the ms 1 genetic male sterility gene. These

populations are cycled on soils of 60-65% Al saturation and in the future should be evaluated at increasingly higher levels of Al saturation.

4. The most Al-tolerant cultivars are being evaluated in regional yield trials in the Colombian and Venezuelan llanos, Peruvian Amazonian lowlands and Brazilian cerrados. Minimum inputs required for economic returns are being conducted in trials in cooperation with ICA.

5. Sorghum lines (IS) identified as originating in acid soils areas of Africa and not presently in the Purdue Collection will be assembled in the U.S. for evaluation in Colombia. Sources in the U.S. will be explored first and if unavailable, ICRISAT seed will be brought into the U.S. and increased under quarantine. Photoperiod insensitive pearl millet lines have been collected from INTSORMIL and other U.S. sources, and seed is being increased in Mississippi. These lines will be screened for Al tolerance at Quilichao, Colombia. Additional pearl millet lines will be collected for future screening.

6. Leaf tissue is being assayed for mineral content by Dr. Ralph Clark (NU-14). Winter and seed increase nurseries are conducted in cooperation with Flores MSU-11 and Axtell PRF-3A at CIAT-Palmira. This project will continue to provide backstop support for MSU-11 as needed. It is estimated that 30-40 man-days will be spent evaluating regional trials and assisting with breeding activities in South America. Computer support for the breeding bookkeeping system will continue to be accomplished at Mississippi.

7. The exchange of early generation Al-tolerant crosses and other breeding lines to National Programs will continue and be expanded.

Problems Regarding Achievement of Objectives

No major problems have been encountered.

Project Output

Research Findings Relevant or Available for Immediate Use

A reliable Al tolerance field screening technique has been developed at Quilichao, Colombia. Tolerance under these conditions can be evaluated visually and then the more agronomically desirable cultivars can be tested on the same plots in yield trials. From over 2500 sorghum lines in the world collection that have been screened under this system, about 400 lines with Al tolerance have been identified. A few of these lines have direct-use potential in tropical South America and Africa with good grain yields (5

t/ha yield at 60-65% Al saturation) while others can only be used as breeding source material.

Research Progress - Improvements Available in One to Three Years

The National Program of Colombia (ICA) originally planned to release one of the highest yielding world collection lines, identified by our program, in 1985, but a change in leadership of the sorghum program has resulted in a delay to identify the most regionally adapted entry from a list of 10 contenders. More than 2000 breeding lines have also been screened and the best of these lines will be evaluated for yield in future trials.

The greatest constraint to Al-tolerant hybrids is the lack of Al-tolerant seed parents. Several Al-tolerant converted lines have been sterilized and are being used as tester females. Other populations of these lines crossed to elite U.S. B-lines are under evaluation.

Preliminary studies show that grain and forage pearl millets have variability for tolerance to Al-toxic acid soils. The most Al-tolerant pearl millet lines will be evaluated at lower elevations at 4°N latitude to see if they have yield potential.

Networking Activities

Workshops:

Principal Investigator planned, coordinated and obtained financing from INTSORMIL, ICRISAT and CIAT for workshop "Evaluating Sorghum for Tolerance to Al-Toxic Tropical Soils in Latin America" at CIAT, Cali, Colombia. This was a major networking effort to get scientists and administrators from Colombia, Venezuela, Peru and Brazil to focus on sorghum research for tropical acid soils. The proceedings of this workshop will be technically edited by the Principal Investigator and Jose Salinas and published in English and Spanish.

Principal Investigator attended and presented a paper at the Sorghum Farming Systems workshop at CIMMYT in September, 1984.

Research Investigator Exchanges:

Sorghum researchers from Colombia, Venezuela, Peru, and Brazil were shown Al-tolerance screening trials at Quilichao, Colombia. Two Brazilian scientists from EMBRAPA, Carlos Casela and Renato Borgonovi, were brought to the U.S. for meetings and short-term training.

Germplasm and Research Information Exchange:

Researchers who received Al-tolerant and other sorghum germplasm:

Brazil:	Mr. Renato Borgonovi, EMBRAPA
	Dr. Candido Bastos, IAC
Colombia:	Mr. Cesar Ruiz, ICA
	Mr. Jose Ever Vargas, ICA
	Dr. Fidel Patarooyo, ICA
Honduras:	Mr. Justiniano Diaz, Recursos Naturales
Indonesia:	Dr. Michael K. Wade, TropSoils
Mexico:	Dr. Luis Amaya, DeKalb-Pfizer
	Dr. Vartan Guiragossian, ICRISAT
Panama:	Dr. Gaspar Silvera, IDIAP
	Mr. Benjamin Name, IDIAP
	Mr. Rauil Gonzalez, IDIAP
Peru:	Mr. Federico Scheuch, INIPA
	Mr. Luis Narro Leon, INIPA
	Mr. Oscar Agreda Turriate, Iquitos
	Dr. Dale Bandy, NCS Univ. Mission
	Dr. Alexander Grobman, Pentagenetics
	Mr. Carlos Herrera, ORTUS Seed Co.
United States:	Dr. A. Bruce Maunder, DeKalb-Pfizer
	Mr. Dave Andrews, NU INTSORMIL
Venezuela:	Dr. Maurcio Riccelli M., Protinal
	Mr. Hector Mena T., CENIAP-FONAIAP
	Dr. Oscar de Cordova, Cargill
Zambia:	Dr. Bhola Nath Verma, SIDA
	Mr. Stefan Hultgren, SIDA
Zinbabwe:	Dr. Lee R. House, ICRISAT/SADCC

Other Support:

Projects MSU-4 and MSU-11 have supported travel of Colombian and Brazilian scientists and have purchased a small thresher, two seed moisture testers, and some breeding supplies for ICA.

Travel

- Colombia. July 1-November 8. Gourley. On-site assignment.
- Mexico. September. Gourley. Systems workshop.

- Villavicencio and Carimagua, Colombia. October. Gourley. Plant research plots.
- U.S.A. November. Gourley. Returned to Mississippi State University.
- Kansas City, Mo. November. Gourley. Technical Committee Meeting.
- Las Vegas, Nevada. November. Gourley and Rogers. ASA meeting.
- Kansas City, Mo. December. Gourley. EZ Council meeting.
- Cali, Quilichao, Villavicencio and Carimagua, Colombia. January. Gourley. Harvest nurseries.
- Zambia and Zimbabwe. April. Gourley. Evaluate sorghum/millet prospects and problems.
- Madison, WI. June. Gourley. Plant Nutrition Workshop.

Publications and Presentations

Publications

Trevathan, L.E., J.A. Cuarezma-Teran, and L.M. Gourley. 1984. Soil-borne fungi associated with sorghum in tropical aluminum soils in Colombia. Abs. Phytopathology.

Cuarezma-Teran, J.A., L.E. Trevathan, L.M. Gourley, and F.V. Agudelo. 1984. Correlations of plant-parasitic nematodes and edaphic factors associated with grain sorghum in the Cauca Valley, Colombia. Abs. Journal of Nematology.

Gourley, L.M. 1984. Finding and utilizing exotic Al-tolerant sorghum germplasm. Proceedings of Workshop "Evaluating sorghum for tolerance to Al-toxic tropical soils in Latin America." CIAT, Cali, Colombia.

Clark, R.B. and L.M. Gourley. 1984. Evaluation of mineral elements of sorghum grown in acid tropical soil. Proceedings of Workshop "Evaluating sorghum for tolerance to Al-toxic tropical soils in Latin America." CIAT, Cali, Colombia.

Wiseman, B.R., H.N. Pitre, L.M. Gourley and S.L. Fales. 1984. Differential growth responses of fall armyworm larvae on developing sorghum seeds incorporated into a meridic diet. Fla. Entomol.

Schwager, B., H.N. Pitre and L.M. Gourley. 1984. Field evaluation of sorghum characteristics for resistance to fall armyworm. J. Ga. Entomol. Soc.

Gourley, L.M. 1984. A life or death situation. AID Front Lines.

Lusk, J.W., P.K. Karan, D.O. Balogu, and L.M. Gourley. 1984. Brown midrib sorghum or corn silage for milk production. J. Dairy Sci. 67:1739-1744.

Rogers, S.A. and L.M. Gourley. 1984. Sorghum tolerance to aluminum toxicity in Colombia. Abs. ASA.

Gourley, L.M. 1984. A comparative perspective on sorghum and millet-based farming systems--Andean Region. Proc. of Workshop "Sorghum Farming Systems in Latin America." CIMMYT, El Batan, Mexico.

Gourley, L.M. 1984. Site visit to Zambia to evaluate sorghum and millet production constraints on acid soils. Report to ICRISAT/SADCC.

Gourley, L.M. 1984. Finding aluminum-tolerant sorghum genotypes. Plant and Soils.

Rogers, S.A. and L.M. Gourley. 1984. Screening sorghum for aluminum tolerance in Colombian soils. ASA Southern Branch Abs.

Presentations

Finding and utilizing exotic Al-tolerant sorghum germplasm. CIAT Workshop.

Adapting sorghum to Al-toxic tropical soils. Seminar CIAT.

A comparative perspective on sorghum and millet-based farming systems--Andean Region. CIMMYT Workshop.

INTSORMIL and breeding sorghum for tolerance to tropical acid soils. Seminar Mt. Makulu, Zambia.

INTSORMIL and breeding sorghum for tolerance to tropical acid soils. Seminar Bulawayo, Zimbabwe.

Finding aluminum-tolerant sorghum genotypes. Symposium Plant Nutrition. Madison, WI.

Changes in Year 7 from Year 6

Three major changes in research plans have developed in Project MSU-4. Dr. Catalino Flores replaced Principal Investigator as Project Leader of MSU-11 in January 1985 at CIAT, Cali, Colombia. MSU-4 Principal Investigator will backstop MSU-11 project, evaluate Al-tolerant germplasm for photoperiod sensitivity, develop parents for Al-tolerant hybrids, and train LDC students.

Involvement with pearl millet will be increased to about 20% in both projects. Pearl millet world collection lines and other germplasm will be collected, insensitive lines increased in Mississippi from U.S. sources and sent to Colombia for Al tolerance screening.

About 10% of MSU-4 will be devoted to sorghum and millet evaluations for Al and Mn tolerance in Zambia.

Breeding Sorghum and Pearl Millet for Developing Countries

Project NU-15

W.M. Ross and D.J. Andrews

University of Nebraska

Other Researchers

Louis Mahzani, Plant Breeder, Botswana

Dr. Raphael P. Duverge, Sorghum Breeder, Dominican Republic

Dr. Joanne Logan, Production Agronomy, INTSORMIL/Dominican Republic

Mrs. A.T. Ndoye, Millet Breeder, Senegal

Drs. L. House, Tunde Obilana, S.G. Gupta, SADCC/ICRISAT - Zimbabwe

Dr. J.R. Witcombe, ICRISAT - India

Drs. Jerry Eastin, Jerry Maranville, M.D. Clegg, University of Nebraska

William M. Stegmeier, Kansas State University - Hays, Kansas

Dr. John Axtell, Purdue University

Institutions

Collaborating Host Countries: Dept. of Agricultural Research, Government of Botswana; Center for Agricultural Research (CESDA), Dominican Republic; National Centre for Agricultural Research (CNRA) Senegal; ICRISAT (Zimbabwe) and ICRISAT (India).

U.S.: Department of Agronomy, University of Nebraska; Kansas State University, Hays Experiment Station; Department of Agronomy, Purdue University.

Linkages:

Visits were made to Botswana by Andrews where cereal breeding and agronomy were discussed, to the Dominican Republic to harvest winter nursery and discuss sorghum variety testing, and to Senegal to plan collaboration on millet research.

Ecogeographic Zone Most Benefited by Research

Southern Africa, West Africa

Objectives, Research Procedure, and Production/Utilization Constraints

Sorghum/Millet Constraints

Yield and adaptation (involves tolerance to physical and biological stress).

Project Objectives

To produce sorghum and millet breeding material and information useful to LDC cooperators, and to stimulate and discuss in-country breeding programs.

Research Procedures

Studies on recurrent selection are being concluded and written (Ross). Material from Francis has been evaluated for performance *per se*, development of seed and pollen parents in hybrids, and as parents in further crosses. New high yielding stocks of LDC adapted sorghum and pearl millet have been introduced and evaluation and crossing of these begun.

Project Output

S_1 family selection appears to be the most useful method of recurrent selection in sorghum. Yield gains were reflected in S_1 test crosses, but they were no better than S_1 testing *per se*. S_1 family testing also was demonstrated to be effective for raising resistance levels to European corn borer.

Yield gains can also be achieved by single fertile plant mass selection (using either 100-seed weight or seed number per head). Selection based on male-sterile plants did not indicate any gain.

Selection for seed protein content alone resulted in a loss in yield. The twin seeded character has no apparent utility in sorghum breeding for stressed conditions.

Research Progress

Breeders' lines of sorghum and pearl millet from ICRISAT and Botswana have been crossed with U.S. stocks. F_2 populations are being evaluated, and F_2 remnant seed or F_3 derived lines will be provided for further selection by collaborators in appropriate LDC locations.

Recurrent selection was begun in an ICRISAT/CIMMYT cold tolerant sorghum population which showed wide phenotypic diversity in Nebraska. A sorghum winter nursery was successfully grown in the Dominican Republic with the assistance of CESDA and Dr. Joanne Logan. A limited amount of off-season material and introductions in quarantine were grown in the winter greenhouse at UNL.

Networking Activities

- Annual Workshop, Maradi, Niger, March 25-28, 1985.
- Third International Iron Symposium, Lincoln, NE, June 27-30, 1985.
- Visit of Dr. Mbaye Ndoye, Senegal, to University of Nebraska at Lincoln, April 12-13, 1985.
- Sorghum germplasm exchange. During the year the following seed was supplied:

Country	Population	Lines
Argentina	—	5
Colombia/INTSORMIL	16	106
Egypt	10	19
France	8	0
Korea	—	8
Mauritania	10	—
Peru	—	8
Thailand	17	30
Turkey	10	7
Philippines	—	40
Dominican Republic	—	3
TOTAL	71	226

- A total of 242 lines were received from Botswana, ICRISAT/India and the Dominican Republic.
- Pearl Millet Germplasm Exchange. Populations were sent to Colombia/CIAT, Cape Verde Islands, and Senegal. Breeding material was received from ICRISAT.
- Provided sorghum breeder, Sebele, Botswana, with irrigation equipment for sorghum and millet germplasm increase and preservation ($23,000).

Travel

- Senegal. Jan. 14-18, 1985. Visit Bambey, establish basis for collaboration.
- Botswana, Zimbabwe, Niger. March 9-30, 1985. Visit cereal research in the two SADCC countries, and participate in the INRAN annual research review.
- Dominican Republic. April 8-13, 1985. Visit CESDA, discuss sorghum variety testing, harvest winter nursery.

Publications and Presentations

Publications

*Galvez, L., R.B. Clark, L.M. Gourley, J.W. Maranville and W.M. Ross. 1985. Proc. Grain Sorghum Bien. Res. and Util. Conf., Lubbock, TX. 14:(in press).

Knapp, S.J., W.W. Stroup and W.M. Ross. 1985. Exact confidence intervals for heritability on a progeny mean basis. Crop Sci. 25:192-194.

*Ross, W.M. 1985. A unique combine-height sorghum genotype. Proc. Grain Sorghum Bien. Res. and Util. Conf., Lubbock, TX. 14:(in press).

Ross, W.M., D.J. Andrews, C.A. Francis and C.O. Gardner. 1985. Plant breeding. pp. 76-79. In (J.F. Winn, ed., and G.L. Teetes, coordinator) INTSORMIL Fighting Hunger with Research. Texas A&M Univ., College Station.

Ross, W.M., J.W. Maranville, G.H. Hookstra and K.D. Kofoid. 1985. Divergent mass selection for grain protein in sorghum. Crop Sci. 25:179-181.

*Tiffany, G.D., and W.M. Ross. 1985. Mass selection for seed size and seed number in sorghum. Proc. Grain Sorghum Bien. Res. and Util. Conf., Lubbock, TX. 14:(in press).

*Williams, E.P., W.M. Ross, R.B. Clark, G.M. Herron and M.D. Witt. 1985. Variability for iron chlorosis in S_1progenies from a sorghum random-mating population. Proc. Grain Sorghum Bien. Res. and Util. Conf., Lubbock, TX. 14:(in press).

Kumar, A., and D.J. Andrews. 1984. Cytoplasmic male sterility in pearl millet [Pennisetum americanum (L.) Leeke] - A review. Adv. Appl. Biol. 10, 113-143.

Kumar, A., _____, R.P. Jain and S.D. Singh. 1984. Registration of ICMA-1 pearl millet parental lines with A1 cytoplasmic-genic male sterility system. Crop Sci. p. 832.

_____ and Harinarayana, G. 1984. Procedures for the maintenance and seed production of pearl millet varieties. ICRISAT Inf. Bull. No. 16

_____, L.K. Mughogho, and S. Ball. 1984. Sorghum and pearl millet production in Africa - problems and prospects with new varieties. CAB/Tanzania national scientific research council conference on Advancing Agricultural Production in Africa, Arusha, Tanzania, 12-18 February 1984.

Bramel-Cox, P.J., D.J. Andrews, F.R. Bidinger and K.J. Frey. 1984. A rapid method for evaluating growth rate in pearl millet [Pennisetum americanum (L.) Leeke] and its wild and weedy relatives (ssp monodii and ssp. stenostaegyum). Crop Sci. 24 1187-1191.

Rai, K.N., D.J. Andrews and Suresh Babu. 1984. Inbreeding depression in pearl millet composites. Zeitschrift Fuer Pflanz. 94, 201-207.

Rai, P., U. Singh, K. Anand Kumar and D.J. Andrews. 1984. Nutritional Quality Improvement in pearl millet [Pennisetum americanum (L.) Leeke]. 11th International Congress of Cereal Chemistry-Symposia on the processing of sorghum and millets: Criteria for quality of grains and products for human food, 4-8 June 1984, Vienna.

Francis, C.A., M. Saeed, L.A. Nelson, and R. Moomaw. 1984. Yield stability of sorghum hybrids and random-mating populations in early and late planting dates. Crop Sci. 24:1109-1112.

Francis, C.A. 1984. Priorities for intercropping research. Agron. Abstr. p. 41.

Rajewski, J.F.K., and C.A. Francis. 1984. Defoliation effect on grainfill and lodging of grain sorghum. Agron. Abstr. p. 135.

Pavlish, L.A., C.A. Francis, and J.F. Rajewski. 1984. Evaluation of soybean yield components in sorghum-soybean intercropping patterns in Nebraska. Agron. Abstr. p. 43.

Dofing, S.M., C.A. Francis, M. Saeed, and A.F. Dreier. 1984. Use of regional trial data to assess yield stability in grain sorghum. Agron. Abstr. p. 64.

Francis, C.A. 1984. On-farm trials: Essential element of FSR/E. Proc. Farming systems Research and Extension Workshop: Implementation and monitoring. Kansas State University, Manhattan, KS.

Parkhurst, A.M., and C.A. Francis. 1984. Time-honored experimental designs and complex cropping systems. Proc. 144th Ann. Meeting, Amer. Statistical Assoc., Aug. 13-16, Philadelphia, p. 81.

Francis, C.A. 1984. Genetic and agronomic improvement of mixed cropping systems: research on component technology. In: Problems in Crop Physiology, Vol. II. U.S. Gupta (ed.) Oxford and IBH Publ. Co., New Delhi (in press).

Francis, C.A. 1985. Variety Development for Multiple Cropping Systems. In: CRC Critical Reviews in Plant Science (in press).

Francis, C.A. 1984. Perspective on sorghum and millet based farming systems. Proc. Farming Systems Workshop, ICRISAT-INTSORMIL-CIMMYT, September 17-21, El Batan, Mexico. 9 pp.

Francis, C.A. 1984. Intercropping - competition and yield advantages. Proc. World Soybean Research Conference III (Session 62), Iowa State University, Ames, Iowa. 10 pp.

Francis, C.A. 1984. Cultivo de Sorgo en Sistemas Agricolas de la Republica Dominicana. Proc. INTSORMIL/SEA Workshop in Sto. Domingo, Dominican Republic, March.

Parkhurst, A.M., and C.A. Francis. 1984. Research methodology and analysis for complex cropping systems. Proc. XIIth International Biometric Conference, September 2-8, Tokyo. pp. 100-109.

*Also presentations.

Presentations

+Furlani, A.M.C., R.B. Clark, W.M. Ross and J.W. Maranville. Differential phosphorus uptake, distribution, and efficiency by sorghum inbred parents and their F_1 hybrids. Second International Symposium on Genetic Aspects of Plant Mineral Nutrition. Madison, WI, June 1985.

#Ross, W.M. Improving plants for tolerance to iron deficiency and other mineral nutrition problems: breeding and genetic points of view. Third International Symposium on Iron Nutrition and Interaction in Plants. Lincoln, NE, June 1985.

+Williams, E.P., R.B. Clark, W.M. Ross, G.M. Herron and M.D. Witt. Variability and correlation of induced iron deficiency chlorosis in a sorghum population evaluated in the field and growth chamber. Second International Symposium on Genetic Aspects of Plant Mineral Nutrition. Madison, WI, June 1985.

#Williams, E.P., W.M. Ross, R.B. Clark, G.M. Herron and M.D. Witt. Heritability of iron-deficiency chlorosis and its effect on agronomic traits in a sorghum population. Third International Symposium on Iron Nutrition and Interaction in Plants. Lincoln, NE, June 1985.

+Will be published in Plant and Soil, Vol. 75, 1986.

#Will be published in J. Plant Nutrition, Vol. 9, 1986.

Breeding for Productivity in Sorghum

Project TAM-21

Frederick R. Miller

Texas A&M University

Other Researchers

Host Countries

J. Mann (Kenya - INTSORMIL)

H. Saadan (Tanzania - TARO)

D. Meckenstock (Honduras - INTSORMIL)

G. Vega Z. (Mexico - INIA)

J. Narro S. (Mexico - INIA)

L. Romero H. (Mexico - UANL)

R. Maiti (Mexico - UANL)

S. Bedolla (Mexico - UNISON)

M. Alvarez (Paraguay - IAN)

J. Fehr (Paraguay - Col. Menno.)

K. Heinz (Paraguay - Col. Menno.)

A. Donoso E. (Paraguay - Int. Amer. Credit for Agri.)

V. Guiragossian (Mexico - ICRISAT)

M. Lierda - (Brazil - IPA)

U.S. Researchers:

R.J. Newton, Investigator

R.A. Creelman, Investigator

Other

D.T. Rosenow - Texas A & M University, Breeder

R. Smith - Texas A & M University, Tissue Culture

W. Jordan - Texas A & M University, Plant Physiology

R. Toler - Texas A & M University, Virology

G. McBee - Texas A & M University, Crop Physiology

Summary

The general purpose of this project is to create germplasm pools, lines and hybrids with high yield potential, good food quality, and a high level of resistance to significant diseases, pests and stress factors which can be used to reduce the constraints to production. Materials from this project and associated projects are already coming into use in a number of

countries, and can be expected to have a significant role in enhancing a stable production of more useful sorghums.

Materials from this project are under advance stages of development in Mexico for utilization in both the highly productive mechanized areas and in the more marginal areas. Sorghums with food quality sufficient for tortilla production have been grown and evaluated for use in a tortilla factory with good results. These food quality sorghums possess drought tolerance and the capacity to produce in marginal areas. Sorghum hectarage is increasing rapidly in the area and with the introduction of these new food type hybrids both food and feed markets can be met. In Paraguay, the potential of sorghum is completely unscratched. There is a shortage of wheat and a need to expand the blending of sorghum flour with available wheat flour. During the year a project on sorghum was initiated in Paraguay. The potential is great for both food and feed types.

During the year there was a release and public distribution of one food-quality male parent which possesses good yield and drought and lodging resistance that combines very well with three newly released food quality females to make hybrids useful in most areas of sorghum production. These females all possess white grain and tan plant color, critical requirements for food sorghum. In addition, a synthetic (mixture of special selections) was developed which has very hard, round seeds for use in alkali based food systems. More than 400 germplasm requests were filled with seeds useful to programs of sorghum improvement throughout the world.

Breeding and physiological activities in the past year have shown that yield can be affected by both temperature and latitude even though the material is photoperiod insensitive. Materials with good yield change in response when moved from the tropics to more temperate areas. Two groups of sorghum, one more tropically adapted and the other more temperately adapted, respond very differently from Puerto Rico to Amarillo, Texas. The more tropical type yielded 98 percent more than the temperate type in Puerto Rico, 33 percent in Weslaco, Texas, 16 percent in College Station and -3 percent in Halfway, Texas.

Sorghums with a glossy surface to the leaves are more resistant to drought. Sorghums with drought tolerance had lower soluble carbohydrate and proline levels as they sustained growth and higher levels in susceptible cultivars which reduced growth. Varieties tolerant to prolonged water

stress utilize solutes to sustain growth, whereas susceptible varieties have higher levels because of reduced growth.

Because breeding for productivity is a combination of complex characteristics, it is being augmented with collaborative research in Mexico, Paraguay, Honduras, Guatemala, Tanzania, Kenya, Sudan and other countries. Each of these programs is critical and addresses a different major constraint to production. The research output from the total effort is brought to bear on the system of improvement of sorghum for stable productivity.

Institutions

Collaborating Host Countries: Sudan: Tanzanian Agricultural Research Organization, Tanzania; Instituto Nacional de Investigaciones Agrocolos (INIA), Centro Research Institute for the Semi-arid Tropics (ICRISAT), University of Sonora (UNISON), Universidad Autonoma de Nuevo Leon (UANL), Mexico.

U.S: Texas A & M University

Linkages

Research on productivity is being carried out in Africa (Kenya, Tanzania, Sudan, Ethiopia, Mali, Niger) in mostly informal relationships. The project supplies materials under MOA's in Tanzania, Sudan, Mali and Niger; all other interactions are not formalized under MOA's. The informal collaboration with researchers in several African countries expands the effectiveness of the MOA's.

Sorghum productivity in Mexico is carried out under three MOA's and also informal collaboration with several universities. The research on productivity with UNISON, INIA and UANL are broad and aimed at yield, quality and resistance to pests or other constraints. Collaboration with ICRISAT/CIMMYT is close and aimed to share germplasm and information. There is also informal collaboration with the Consejo Latinoamericana de Investigadores en Sorgo (CLAIS) - an international organization of regional sorghum workers from throughout Latin America.

The development of sorghum research in Paraguay between INTSORMIL and Institute Agronomia Nacional (IAN) has just begun but is one of the most enthusiastic and is aimed at developing a sound food and feed grain sorghum program in Paraguay.

The formal and informal agreements with several agencies in both American and African countries are aimed to ensure a broad stability to the characteristics of productivity and to distribute useful germplasm effectively over a larger part of the sorghum growing area.

Ecogeographic Zones Most Benefited by Research

The greatest impact from this project will come in Central America, South America and Central Africa, with some effect in southern Africa. The reason for this is - sorghums with tropical adaptation and appropriate disease resistance and food traits measured for these areas are similar.

Objectives, Research Procedures, and Production/Utilization Constraints

The general objective is to create germplasm pools and lines with high yield potential, good food quality, and a high level of resistance to significant disease, pests and stress factors. For such material in the individual country and area breeding programs, we derive lines, hybrids and varieties best suited to specific conditions. Materials already developed in this manner are coming into use in a number of countries, and can be expected to have a significant role in enhanced production.

Project Objectives

1. Develop through breeding, selection and appropriate evaluation, stable, high yielding, agronomically desirable sorghums with high levels of disease, insect and agronomic stress resistance, high grain quality with weathering resistance and resistance to environmental stresses.

2. Determine the effects of photoperiod and especially temperature, on growth and development as related to productivity.

3. Determine the relationship between yield and photosynthetic ability.

4. Assessment and utilization of physiological measures of drought resistance to improve sorghum.

5. Distribute improved lines, hybrids and early generation populations possessing superior productivity to collaborating LDC's.

6. Develop specific germplasm pools and resources for use in impacting productivity in Mexico, Tanzania/Kenya, Honduras and South America.

Changes in Objectives from Previous Year

No significant changes existed in project objectives from previous year's program because a breeding project is necessarily stable and objectives are long enduring.

Research Procedures

Research procedures used to accomplish the objectives of Year 6 are standard selection procedures utilized in breeding nurseries, obtaining yields from replicated yield trials, and laboratory screening and evaluations done on both duplicate and replication procedures where possible. Early generation breeding materials were provided to several national programs. A tandem, step-wise rotation of selection and evaluation is then done between countries to ensure broad ranges of stability and adaptation.

Project Output

Research Findings

Productivity is defined as a measure of yield per unit area of production. Yield is constrained by risks associated with unstable production. Plant breeding is an effective way to address most of the constraints. The general objective of the breeding program in TAM-21 is to create germplasm pools, lines and hybrids with stable potentially high yield, good food quality, and a high level of resistance to significant diseases, pests and stress factors while maintaining acceptance and nutritional quality - then to make these materials available to collaborators to attack constraints to production.

Since research began in Mexico, a large amount of germplasm has been exchanged. Both early generation and finished inbreds have been jointly evaluated by INIA, UNISON and UANL. In this year F_2 to F_5 populations were grown and selected at three locations. Approximately 150 selections were returned to INTSORMIL following selection at Celaya and La Barqua. Seven ITAT's were evaluated across Mexico providing a base of information for new germplasm evaluation at different elevations, etc. Other materials evaluated with collaborators at UNISON and UANL were provided for secondary evaluation of drought tolerance and food properties, respectively.

As work continues for developing sorghum in Mexico, the acreage devoted to this strongly expanding commodity is increasing. The economic boom that

sorghum has brought to growers in Mexico is increasing abilities to purchase goods and services never before possible by farmers there. The expansion of sorghum in Mexico is doing two very good things (plus many more). Those are: 1) putting pressure on maize to meet the challenge of a better, more useful productive type and 2) putting pressure on sorghum to be more useful as a human food.

Mexico, through INIA, has released hybrid sorghums developed by this project. More hybrids are in final testing stages. Germplasm is being brought together by the programs at INIA and UANL for long term improvement in yield and drought resistance. Much of the sorghum germplasm evaluated by this project has been put into farmers' fields through commercial United States seed organizations. More is on the way.

The grain quality research which this project interacts with, will be reported by TAM-26.

Despite the success of sorghum in parts of South America, very little has been done in Paraguay. In this year preliminary contacts were made by Paraguayan students to have INTSORMIL develop a program in Paraguay. Following a visit in October, several trials, sets of germplasm and information were provided. Sorghum in Paraguay was anticipated to be used to extend wheat flour; as feed for poultry, swine and finally rations for cattle; and as a grazing or hay crop for the three-month dry period - July to September. Results of the first year's trials showed that the tropically adapted sorghum hybrids were the most productive. No major problems were immediately evident and interest was high. In one trial, Dorado yielded 3,800 kg/ha while the local maize yield was 800 kg/ha. Yields of TA hybrids in the north were 5,000 to 6,000 kg/ha. In the Mennonite colony near Filadelfia, they produced over five tons of ATx623 x Greenleaf Sudangrass for forage production (the first hybrid sorghum seed produced in Paraguay). The Mennonites use sorghum to extend wheat flour and produce brown bread (having various levels of brown color depending upon how much sorghum flour they add). White grain/tan plant color hybrids will be evaluated in that area for food use. Paraguay offers a unique place to work sorghum because of the high level of interest and the multiple use envisioned for sorghum. Beginning in October 1985, there was an expansion of the work plan for Paraguay. All this activity was initiated by Paraguay and with the strong support and backing of the USAID Mission in Asuncion.

During this year the project has released for general distribution to public and private sorghum researchers one male inbred line and seven females.

No. Designation	Type	Use
RTx435	Male inbred	Tan plant, white grain, yellow endosperm
A/BTx626	Female inbred	Red plant, red grain, normal endosperm
A/BTx627	Female inbred	Red plant, red grain, normal endosperm
A/BTx628	Female inbred	Purple plant, red grain,normal endosperm
A/BTx629	Female inbred	Red plant, white grain, normal endosperm
A/BTx630	Female inbred	Tan plant, white grain, waxy endosperm
A/BTx631	Female inbred	Tan plant, white grain, normal endosperm
A_2/B_2Tx632	Female inbred	Tan plant, white grain, normal endosperm

These materials have been evaluated in trials in numerous countries and nationally. The food potential of sorghum has been substantially improved because of the release of ATx630, ATx631 and A_2Tx632, which are white grain and tan plant color. In combination with RTx435 and other previously released tan R-lines, there is now potential to have grain in hybrid combinations which have no discoloration component in food products. These are only the forerunners of a series of new inbred lines developed in the project possessing food quality characteristics.

The interaction with cereal quality is providing many clues to the breeding program. F. Gomez (Honduras) and C. Blanchet (Haiti) are evaluating sorghums for combining ability of food quality parameters in an attempt to help breeders with selection practices. M. Galiba (Senegal), working with sorghums for cous-cous quality, has determined that pearling yield, hardness, roundness and starch types are major factors for selection in food quality.

In this year 35 trials for adaptation were distributed to collaborators nationally and internationally. The ITAT's were designed to compare yield potential, stability and adaptation for an array of germplasm. Both parents and hybrids were included in this program. Approximately 30 additional supplemental trials were distributed to compare productivity - most of which were sent internationally. Twenty International Sorghum Virus Nurseries were deployed to monitor virus incidence in cooperation with R. Toler. More

than 300 seed requests were filled during the year, and most were of multiple line requests.

The materials under selection using NaOH as the selector for food quality were grown at three locations and reselected. The best reactive types were identified and composited for proposed release and distribution. Preliminary information based on performance in Tanzania, Kenya, Ethiopia and Honduras suggests that the composite has both excellent food quality and a high yield level. Grain produced by the composite is very vitreous and all with white color. There are purple, red and tan plant colors in the composite.

It was found that the primary pericarp color loci R, Y, B_1, B_2, and S interact to provide the base for the Group I (grain which does not contain a pigmented testa), and Group II (grain which does contain a pigmented testa, i.e., B_1B_1 B_2B_2 but is ss) and Group III (grain which does contain a pigmented testa and dominant SS). There is agreement between the chemical methods of separating the grain into three groups and the genetic methods of separating the grain into three groups.

In a combining ability study, the tropically adapted hybrids were the most stable for yield across environments. There also appeared to be a relationship between G50, yield and adaptation. In a study designed to characterize the phenomena associated with tropically adapted and temperately adapted sorghums and their response across diverse environments, it was found that there was a strong interaction of environment and adaptation. TA cultivars exhibited wider adaptability across the environments from Puerto Rico to Amarillo, Texas. For most agronomic characteristics measured, TA types outperformed TE types in the more tropical environments. This relationship was generally reversed in more temperate locations. The percent change in grain yield for TA over TE types ranged from 98 percent in Puerto Rico , 33 percent in Weslaco, 16 percent in College Station and -3 percent in Halfway.

In the area for drought resistance which impacts productivity, the project has done several studies. Recently, a certain degree of correlation between sorghum drought responses in the field and response to water-stress in culture has been shown. We observe that proline levels were increased in prolonged, moderate to severe, water-stressed callus cultures, especially those varieties whose growth was very susceptible to drought; conversely,

low proline levels were associated with those varieties that sustained their relative growth in response to water-stress. We have analyzed soluble carbohydrate levels by gas chromatography in sorghum callus cultures when water-stress was induced by addition of polyethlyene glycol (PEG) to the culture medium.

One of the metabolic changes in response to water-stress that confers an advantage through turgor maintenance and sustained growth is osmotic adjustment whereby solutes accumulate. We wanted to relate internal solute levels to cell culture growth during water-stress in cells not previously adapted to a desired water potential. Furthermore, because the cell cultures we were interested in were derived from drought-susceptible and drought tolerant varieties whose growth under water-stress was decidedly different after an eight-week stress period, we wanted to characterize the internal solutes relative to their final growth. This information would be most useful in selecting genotypes for drought tolerance. The data indicate that soluble carbohydrates and proline were lower in tolerant cell cultures which sustain growth during prolonged water-stress and higher in susceptible cultures where growth is reduced.

Ten varieties of Sorghum bicolor (L.) Moench were grown as callus cultures under conditions of water stress, which was induced by addition of polyethylene glycol (M. wt. 8000) in the medium. Growth and free proline were estimated in the control and water-stressed cultures. In all varieties, proline levels were low in the absence of water stress and the levels increased in response to water stress. However, the magnitude of these increases were not correlated with stress tolerance of the individual varieties in culture. Thus, increase in proline seems to be an incidental consequence of stress in vitro and not an adaptive response to combat water-stress in sorghum. However, proline accumulated to higher levels in the drought susceptible varieties compared to the drought tolerant varieties.

Eight varieties of Sorghum bicolor (L.) Moench were grown as callus cultures under induced, prolonged water-stress (eight weeks), using polyethylene glycol in the medium. Soluble carbohydrates (fructose, glucose, galactose, sucrose, ascorbate, dhurrin and malate) were measured relative to callus growth in order to determine varietal differences in response to prolonged water-stress and determine the role of soluble carbohydrates in water-stressed callus cultures. Sucrose, glucose and

fructose were the dominant solutes detected in all calli at all water potentials. All varieties examined had high levels of carbohydrate solutes in the absence of water-stress and low levels in the presence of prolonged water-stress. However, at low water potentials, these low levels of carbohydrate solutes were most associated with drought-tolerant, varietal callus with slightly higher levels associated with drought-susceptible, varietal callus. Thus, varieties tolerant to prolonged water-stress utilized solutes to sustain growth, whereas susceptible varieties had high levels because of reduced growth.

Research Progress

Breeding to increase or maintain productivity is of paramount interest. Such an effort blends the activities of many disciplines. Sorghum is generally grown in areas where risks to production are high. To find solutions to these risks, it is necessary to develop germplasm pools, etc., which can be properly tested and deployed. That is the overall purpose of this project on productivity.

Development of germplasm with stable higher yields, adequate levels of stress resistance, and food quality characteristics has progressed well. There is more interest now in the Western World (Latin America, Central America and South America) in sorghums which are primarily useful for human food and secondly useful for livestock feed.

Networking Activities

- September 10-12, 1984. Participated in the INTSORMIL external review at College Station and acted as Breeding Section Coordinator (F. R. Miller).
- September 16-22, 1984. Participated in "Farming Systems Workshop on Sorghum/Millet" (F. R. Miller).
- September 29-October 4, 1984. Traveled to Paraguay to evaluate potential for sorghum program and established initial plan of work with three agencies in the country (F. R. Miller).
- October 4-8, 1984. Argentina to survey the basic pedigrees and production constraints used in the country to strengthen program in Paraguay and to establish contact with sorghum researchers in Argentina (F. R. Miller).

- February 11-19, 1985. To Paraguay to evaluate trials, establish relations with Ministry of Agriculture and other agencies in country (F. R. Miller).
- February 17-21, 1985. (Co-workers on project) to Lubbock, Texas to participate in the 14th Biennial Sorghum Research & Utilization Conference, and to participate in the INTSORMIL planning sessions (R. Creelman).
- March 9 - 20, 1985. To South Africa and Transki to evaluate sorghum production, utilization and potential (F. R. Miller).
- June 2 - 5, 1985. To Hermosillo, Mexico, to review and observe the INTSORMIL program being conducted by Dr. Santiago Bedolla and co-workers (F. R. Miller).
- Miscellaneous: Held meetings in College Station with ICRISAT staff, INIA and UANL staff to discuss research plans and results of previous investigations.
- Miscellaneous: Germplasm and organized trials were sent to collaborators in numerous countries including INTSORMIL MOA countries.

Name or Type		Number
Int. Tropical Adaptation Test		35
Int. Sorghum Virus Nursery		20
Hybrid Yield Trials		30
Parent/Hybrid Flowering Data Trials		3
F_2 Breeding Sets (50+ dif. F_2/set)		4
Germplasm, specific requests		300+
Official Release	RTx435	Male
Official Release	A/BTx626 through A_2/B_2Tx632	Female

Anticipated Travel in Year 7

- Late September/October 1985. To Paraguay to coordinate work plan, establish nursery sites and finalize activities for 1985/1986 crop cycle, hopefully, to sign MOA.
- October 1985. To Mexico to participate in Hybrid Seed Workshop, and to participate in a review of breeding activities at INIA.

- December 1985. To American Society of Agronomy meeetings in Chicago, IL to participate in several committee meetings relating to germplasm and international agriculture.
- December 1985. Participate in Eco-zone meeting in Honduras for INTSORMIL project investigations.
- February 1986. Paraguay and Argentina to evaluate success of work completed on INTSORMIL activities there and to expand activities.
- June 1986. To Hermosillo and Marin, Mexico, to review research involvement with collaborators on drought and food quality.

Publications and Presentations

Creelman, R.A., F.R. Miller, G.G. McBee and R. Monk. 1984. Sorghum-An Answer to the Food/Fuel Conflict. Submitted. Energy in Agriculture.

Creelman, R.A., R.P. Wiedenfeld, and M.D. Heilman. 1984. Cropping Systems for energy farming of sorghum in the semi-arid subtropics. Submitted. Energy in Agriculture.

Bhaskaran, S., R.H. Smith, and R.J. Newton. 1985. Physiological changes in response to induced water stress I. Free Proline. Plant Physiology. (Accepted).

Newton, R.J., R.H. Smith, S. Bhaskaran, and J. Puryear. Physiological changes in cultured sorghum cells in response to induced water stress II. Soluble carbohydrates and organic acids. Plant Physiology (In Review).

Raab, Jr., Q.J. 1985. A characterization of sorghum for genes affecting pericarp color and phenols. Ph.D. Dissertation. Texas A & M University, College Station, Texas.

Monk, R.L. 1984. A characterization of sorghum [Sorghum bicolor (L.) Moench] for biomass utilization. Ph.D. Dissertation. Texas A&M University, College Station, Texas.

Otte, C.E., W.M. Ross, C.Y. Sullivan, R.L. Voigt, and F.R. Miller. 1984. Evaluation of R-lines from the sorghum random-mating population NP3R. Crop Sci. 24:9-12.

Miller, F.R. 1984. Registration of RTx432 sorghum. Crop Sci. 23:392.

Miller, F.R., and D.T. Rosenow. 1984. Registration of RTx433 sorghum parental line. Crop Sci. 24:1225-1226.

Miller, F.R., and D.T. Rosenow. 1984. Registration of RTx434 sorghum parental line. Crop Sci. 24:1226.

Gerik, T.J., and F.R. Miller. 1984. Photoperiod and temperature effects on tropically and temperately adapted sorghum. Fields Crop Res. 9:29-40.

Mann, J.A., C.T. Kimber, and F.R. Miller. 1983. The origin and early cultivation of sorghum in Africa. Texas Agric. Expt. Stn. Bul. 1454. Texas A&M University, College Station, Texas.

Starr, J.L., R.J. Newton, and F.R. Miller. 1984. Presence of dhurrin in sorghum root tissue and the effect of pathogenesis on hydrogen cyanide potential. Crop Sci. 24:739-742.

Torres-Cordona, S., A. Sotomayor, and F.R. Miller. 1984. Agronomic comparison and in vitro dry matter digestibility of eight sorghums at two locations in Puerto Rico. J. of Agric. Univ. of Puerto Rico.

Jordan, W.R., P.J. Shouse, A. Blum, F.R. Miller, and R.L. Monk. 1984. Environmental physiology of sorghum. II. Epicuticular wax load and cuticular transpiration. Crop Sci. 24:1168-1173.

Miller, F.R., and R.W. Toler. 1984. Registration of Tx2786 sorghum germplasm. Crop Sci. 24:1219.

Miller, F.R. 1984. Registration of RTx430 sorghum parental line. Crop Sci. 24:1224.

Monk, R.L., F.R. Miller, G.G. McBee, and R.A. Creelman. 1984. A characterization of sorghum for biomass utilization. Agron. Abstr.

Wiedenfeld, R.P., and R.A. Creelman. 1984. Effects of double crop rotation sequences on soil nitrogen mineralization. Agron. Abstr.

McBee, G.G., R.A. Creelman, and F.R. Miller. 1984. Ethyl alcohol yield from soybean biomass. 14th Biennial Grain Sorghum Research and Utilization Conference. Lubbock, Texas. February.

Abstracts

Monk, R.L., F.R. Miller, G.G. McBeen and R.A. Creelman. 1984. A characterization of sorghum for biomass utilization. Agron. Abstr. pp. 79-80.

Alegre S., A. and F.R. Miller. 1984. Cold tolerance of sorghum during germination and early seedling growth. Agron. Abstr. p. 56.

Britten, C.L., D.M. Vietor, R. Garcia Salas, and F.R. Miller. 1984. Biomass of residues of nonsenescent sorghum. I. $^{14}CO_2$ assimilation and partitioning. Agron. Abstr. p. 101.

Salas, R.G., D.M. Vietor, C.L. Britten, and F.R. Miller. 1984. Biomass of residues of nosenescent sorghum. II. Accumulation of nonstructural carbohydrates. Agron. Abstr. p. 104.

Vietor, D.M., F.R. Miller, C.L. Brittin, and R.G. Salas. 1984. Biomass of residues of nonsenescent sorghum. III. Variation among diverse genotypes. Agron. Abstr. p. 118.

Rosenow, D.T., L.E. Clark, F.R. Miller, and C.A. Woodfin. 1984. Progress in breeding for drought tolerance in sorghum. Agron. Abstr. p. 86.

Perez, G.J., and F.R. Miller. 1984. Combining ability for adaptation in newly developed inbreds of sorghum. Agron Abstr. p. 82.

Raab, Jr., Q.J., F.R. Miller, and L.W. Rooney. 1984. The genotype and phenotype of several important kernel and plant characteristics of some common Sorghum bicolor varieties. Sorghum Newsletter.

Hahn, D.H., C. McDonough, D.T. Rosenow, F.R. Miller, L.W. Rooney, and D. Meckenstock. 1984. Shawaya: A "Black" sorghum from the Western Sudan. Sorghum Newsletter.

Alexander, J.D., R.W. Toler, and F.R. Miller. 1984. Effects of maize dwarf mosaic virus strain-B infection on growth and yield of susceptible sorghum. Sorghum Newsletter.

Langham, M.A., R.W. Toler, J.A. Alexander, and F.R. Miller. 1984. Reaction of sorghum accession under natural infection by yellow sorghum stunt mycoplasma. Sorghum Newsletter.

Vann, S.R., R.W. Toler, and F.R. Miller. 1984. Reactions of Sudangrass accessions to mechanical inoculations with maize dwarf mosaic virus strain-A. Sorghum Newsletter.

McBee, G.G., and F.R. Miller. 1984. Leaf position influence on grain yield, relative photosynthetic potential and stem carbohydrates in sorghum. Agron. Abstr. p. 111.

Raab, Jr., Q.J., F.R. Miller, and L.W. Rooney. 1984. Relationship of genes affecting pericarp color and polyphenols in the caryopsis of Sorghum bicolor (L.) Moench. Agron. Abstr. p. 79.

Smith, R.H., S. Bhaskaran, R. Newton, and F.R. Miller, 1984. Sorghum varieties screened in vitro for osmotic tolerance and physiological studies. Pl. Physiol. Abstr.

Pietsch, D., F.R. Miller, L. Reyes, and R. Creelmen. 1984. Grain sorghum performance tests in South and Central Texas. 1983. Texas Agric. Expt. Stn. MP-1548. Texas A&M Univ., College Station, Texas.

Perez, G.J., and F.R. Miller. 1984. Behavior of three-way and single-cross F_1 hybrids in sorghum for germination and coleoptile length. Sorghum Newsletter.

Mann,J.A., and F.R. Miller. 1984. Effects of environment during seed maturation on base germination temperature and total seed sugar content of Sorghum bicolor (L.) Moench. Sorghum Newsletter.

Monk, R.L., F.R. Miller, G.G. McBee, R.A. Creelman, and D.P. Chynoweth. 1984. Improvements of sorghum for energy production. Symposium: Energy from Biomass and Waste VIII. Lake Buena Vista, Florida, Institute of Gas Technology.

Bhaskaran, S., R.H. Smith and R. J. Newton. 1985. Sorghum bicolor varieties screened for osmotoc tolerance and physiological studies. Annual meeting of the National Tissue Culture Association. New Orleans, Louisiana.

Alegre, A., and F.R. Miller. 1984. Cold tolerance of sorghum during early development stages. Proceedings 39 Ann. Amer. Seed Trade Assn. Chicago, Illinois.

Sweeten, J.M., E.A. Hiler, F.R. Miller, F.M. Hons, G.G. McBee, and C.G. Coble. 1984. Sorghum for methane: an overview of the GRI project at Texas A&M University Solar and Biomass Workshop. April 17-19. Atlanta, Georgia.

Vietor, D.M., F.R. Miller, and C.L. Brittin. 1984. Photosynthate partitioning in relation to senescence. Ann. meeting Southern Agri. Workers. Amer. Soc. Agron. Abstr. p. 12.

Changes in Year 7 Project Plans

The Year 7 project plans have been previously submitted and no changes are anticipated.

Sorghum Improvement in Honduras and Central America
Project TAM-31

Dan H. Meckenstock and George C. Wall
Texas A&M University

Summary

Roughly 300,000 hectares of sorghum are planted annually in El Salvador (116,000 ha), Nicaragua (65,000 ha), Honduras (62.000 ha), and Guatemala (56,000 ha). In terms of area sown, sorghum is the second most important crop in El Salvador (after maize) and the third most important in Nicaragua, Honduras, and Guatemala (after maize and beans). More than 80 percent of the varieties used in these four countries are maicillos criollos, tall tropical sorghums, intercropped with maize, The other 20 percent are improved varieties and hybrids used for grain, forage, or industrial purposes.

TAM-31 is an overseas project of Texas A&M University (TAMU) and is located in Honduras, the prime site for the Central America and the Caribbean ecogeographic zone. The primary objective of TAM-31 is to increase sorghum productivity and production in Central America through the release of improved sorghum germplasm. However, it also facilitates collaborative research between INTSORMIL principal investigators, graduate students, and host country institutions. The project leader is Dr. Dan H. Meckenstock, who is stationed at the La Lujosa Experiment Station in Choluteca. Graduate students who have collected research data in Honduras during Year 6 have been George Wall (TAMU), Ronaldo Sequeira (TAMU), Celina Choto (TAMU), Marco Castro (MSU), and Carlos Trabanino (MSU). The two primary host country institutions that TAM-31 works with are the Secretaria de Recursos Naturales (SRN) in Honduras and the Centro de Tecnologia de Agricola (CENTA) in El Salvador. Primary counterparts are Ing. Rigoberto Nolasco (SRN) and Ing. Renè Clarà (CENTA). In addition, the AID missions in Honduras and El Salvador provide Economic Support Funds to the host country institutions to support INTSORMIL activities. TAM-31 activities are expanding to include collaborative research with the Escuela Agricola Panamericana (EAP), the Fundaciòn Hondureña de Investigacion Agricola (FHIA) in Honduras, and the Instituto de Ciencia y Technologia Agricolas (ICTA) in Guatemala.

TAM-31 has made steady progress since its beginning in October of 1981. Three grain sorghum cultivars have been released in conjunction with SRN in Honduras. These replace old varieties which the SRN previously offered with higher yields and better disease resistance. The releases are Tortillero (1983), Catracho (1984), and Sureño (1985). This record is an unequaled accomplishment in the history of the Honduran national sorghum program.

Collaborating Institutions and Personnel

Honduras (Prime Site), Secretaria de Recursos Naturales (SRN)

- Ing. Miguel Angel Bonilla Reyes, Minister
- Ing. Wilfredo Diaz A., General Director, Division of Agriculture
- Ing. Gerardo Reyes, Head, Department of Agricultural Research
- Ing. Federico T. Ramos, Regional Director, Choluteca
- Ing. Rigoberto Nolasco P., Head, National Sorghum Program, TAM-31 Counterpart
- Ing. Juan Benito Guevara, Assistant, National Sorghum Program
- Ing. Miguel Soler, Regional Head, Sorghum Program in Comayagua
- Ing. Juan Blas Valladares, Regional head, Sorghum Program in Olancho
- Ing. Edmundo Ràmirez, Technician, On-farm Research
- Ing. Rigoberto Hernandez, Regional Coordinator of Research, Choluteca
- Ing. Rigoberto Rodriguez, Head, National Pigeonpea Program

TAM-31 has been working directly with the SRN since October 1981. As a result of this collaboration, the sorghum variety Tortillero (1983), the hybrid Catracho (1984), and the dual purpose variety Sureño (1985), have been released. Both Tortillero and Sureño have exceptional grain quality for utilization in tortillas. TAM-31 provides assistance and coordinates INTSORMIL graduate student activities in Honduras. In the first half of Year 6, both Mr. George Wall (TAMU) and Mr. Marco Castro (MSU) successfully completed their second and final year of research towards their graduate degrees. In the last half of Year 6, Mr. Ronaldo Sequeira (TAMU) and Mr. Carlos Trabanino (MSU) both began working on entomological problems earmarked as top priority by the SRN.

AID/Honduras (AID/H)

Mr. Anthony Carterruci, Director

Mr. Richard Peters, Chief, Office of Rural Development

Mr. Gordon Straub, Office of Rural Development

Dr. John Warren, Office of Rural Development/INTSORMIL Liaison

Mr. Richard Owens, Office of Rural Development/FHIA and MIPH Projects

Dr. Frank Bendaña, Office of Rural Development/Private Seed Industry Project

Ing. Felipe Manteiga, Office of Rural Development/Private Seed Industry Project

For the past three years, AID/Honduras has assigned Economic Support Funds (ESF) to SRN to support INTSORMIL activities. Funding levels were: $30,000 (1983), $23,500 (1984), and $50,000 (1985). In Year 6, TAM-31 began exploring other areas of possible support, including scholarships for Mr. Marco Castro (MSU) and Mr. Carlos Trabanino (MSU), and placement of Dr. Francisco Gomez with the Fundaciòn Hondureño de Investigaciòn Agricola (FHIA). Also, TAM-31 has offered assistance in training and providing germplasm for the sorghum sector of the private seed industry that AID/H promotes.

Escuela Agricola Panamericana (EAP), Zamorano, Honduras

Dr. Simòn Malo, Director

Dr. Leonardo Corral, Head Department of Agronomy

Dr. Keith Andrews, Head, Honduran Integrated Pest Management Project

An informal collaborative relation has been maintained with EAP since 1981. Most of this collaboration has been with the AID/Honduras Integrated Pest management project headed by Dr. Keith Andrews and INTSORMIL entomologists at TAMU and MSU. In Year 6, TAM-31 provided several yield trials and germplasm for instruction purposes. Because it has been proposed that the basic seed unit for the Honduran private seed industry be situated at EAP, it is intended to broaden cooperation with EAP to include sorghum seed production.

Fundaciòn Hondureña de Investigatìon Agricola (FHIA)

Dr. Christopher Millensted, Interim Director

Dr. Mario Contreras, Head, Department of Research

FHIA was recently established by AID/H as a private research institution with the mandate of export agriculture. AID/H has made known its wishes that FHIA be involved in basic grains research but the extent of its involvement has not yet been determined. TAM-31 has approached FHIA about collaboration in sorghum research. Topics discussed were employment of Dr. Francisco Gomez (Honduran Ph.D. candidate at TAM-21) with FHIA to act as an INTSORMIL counterpart and the sponsoring of scholarships for two Honduran graduate students at MSU-5, Mr. Marco Castro (Ph.D. candidate) and Mr. Carlos Trabanino (MS candidate). AID/H has suggested both of these linkages.

Proyecto de Manejo de Recursos Naturales/AID

Dr. John Warren, AID Project Officer

Mr. Frederick Tracy, Soil Conservation

The proyecto de manejo de recursos naturales deals with soil conservation in southern Honduras, along the Choluteca watershed. This project has successfully organized small farmers and taught them how to terrace and manage their hillside fields. The project has identified a host of maiz-maicillo farmers who are receptive to new technology. High yielding sorghum like Catracho and Sureño need to be introduced into these sectors and cultural practices developed. The most promising farming system is Sureño in relevo (relay) with maize. Higher yields could be expected in both sorghum and maize.

El Salvador, Centro de Tecnologia Agricola (CENTA)

Sra. Bertha Amelia de Bellosa, Director

Ing. Roberto R. Sandoval, Chief, Division of Agricultural Research

Ing. Ricardo Ortiz, Head, Department of Special Studies

Ing. Luis Alberto Querrero, Head, Department of Basic Grains

Ing. Renè Clarà, Coordinator, National Sorghum Program, TAM-31 Counterpart

Ing. Rafael Reyes, Entomologist/Agronomist, National Sorghum Program

El Salvador has the greatest area planted to sorghum in all of Central America. CENTA has the strongest national sorghum program in the region. This is evidenced by the steady release of new varieties and the fact that El Salvador does not import sorghum seed. In Year 6 TAM-31/CENTA work plans for developing improved maicillo varieties and hybrid were drawn up and

joint yield trials and breeding nurseries were planted. Ing. Clarà was the collaborating scientist. In addition, TAM-31 provided financial assistance for Ing. Clarà and Ing. Ortiz to attend the INTSORMIL Principal Investigators Conference in Lubbock, Texas, and the Programa Cooperativo Centroamericano para el Mejoramiento de Cultivos Alimenticios (PCCMCA) in Tegucigalpa, Honduras, respectively. TAM-31 also acted to coordinate activities between TAM-21, TAM-23, TAM-24, and CENTA. A Memorandum of Understanding (MOU) between INTSORMIL and CENTA is being drafted which will formalize activities and provide a basis for strengthening collaborative research.

AID/El Salvador (AID/ES)

Dr. Kenneth Ellis, Chief, Office of Rural Development

Mr. Thomas King, Deputy, Office of Rural Development

Ing. Rodolfo Cristales, Officer

Ing. Mario Apontes, Officer

Preliminary talks with the AID/ES have taken place and the mission was supportive of INTSORMIL collaboration with CENTA. Dr. Ellis has suggested that an MOU between INTSORMIL and CENTA be signed. AID/ES has provided the funding to carry out the Year 6 work plan drafted with Ing. Renè Clarà. Also, it has provided funds to send Ing. Ortiz and Ing. Clarà to Texas A&M University for short term training with Dr. Frederiksen and Miller, respectively.

Guatemala, Instituto de Ciencia y Tecnologia Agricolas (ICTA)

Ing. Edgar Ramiro Salguero, Head, National Sorghum Program

This is the first year that TAM-31 has distributed germplasm of improved maicillos to Guatemala. Guatemala is currently providing one location for testing maicillos.

Guatemala, Instituto de Nutriciòn de Centro America y Panama (INCAP)

Dr. Ricardo Bressani, Head, Division of Food and Agricultural Sciences

INCAP has provided chemical and biological analysis of sorghum grain samples.

Comisiòn Latinoamericana de Investigadores en Sorgo (CLAIS)

CLAIS consists of the sorghum researchers of the national sorghum programs of the following countries: Mexico, Guatemala, El Salvador, Honduras, Nicaragua, Costa Rica, Panamà, Dominican Republic, and Haiti.

TAM-31 provides breeding expertise and germplasm to CIAIS members.

ICRISAT/Mexico

Dr. Vartan Guiragossian, Sorghum Breeder

Dr. Compton Paul, Agronomist

Mississippi State University (MSU)

MSU-5 Dr. Henry N. Pitre

Mr.Marco Castro (Ph.D. Candidate), Fall Armyworm Population Dynamics and Control

Mr.Carlos Trabanino (MS Candidate), Soil Insect Identification, Ecology, Biology, and Control

Texas A&M University (TAMU)

TAM-21 Dr. Fred Miller, Hybrid Tropical Adaptation

TAM-22 Dr. Darrell Rosenow, Drought Tolerance and Disease Resistance

TAM-23 Dr. Gary Peterson, Midge Resistance

TAM-24 Dr. Richard Frederiksen, Disease Identification, Screening, and Loss Assessment

TAM-25 Dr. Frank Gilstrap and Mr. Ronaldo Sequeira, Biological Control of Diatraea sp.

TAM-26 Dr. Lloyd Rooney and Ms. Celina Choto, Evaluation of Traditional Cooking Methods.

Objectives, Research Procedures, and Production/Utilization Constraints

1. Increase sorghum productivity and production in Honduras and Central America through the release of improved sorghum germplasm (short term goal) and through the improvement of local tropical varieties (long term goal).

The short term breeding goal of introducing improved sorghum germplasm, testing, and release is progressing well with the recent release of Sureño. In the past four years two varieties and one hybrid have been released. These new materials replace old SRN varieties and offer new alternatives. Tortillero substitutes CENTA S-1 (released in 1977) with better tortilla quality, better resistance to downy mildew, and greater yield potential. The dual purpose forage/grain sorghum variety Sureño replaces Sart (released in 1970) with tortilla quality, higher grain yield, and resistance to downy mildew and grain molds. Catracho is SRN's first hybrid release and is a new addition to the SRN line of sorghums which offer high yield potential and

resistance to downy mildew. Catracho, a widely adapted hybrid, was top of the test in experiments conducted throughout Central America in 1984 by ICRISAT/CLAIS. Because grain yields of Catracho are outstanding, this hybrid offers alternatives to sugarcane, rice, and cotton in the semiarid regions of the country. These recent advances bring the Honduran sorghum program in line with that of Guatemala and El Salvador.

CONSTRAINTS: Sufficient seed of the new materials must be produced and made available to farmers so that the agricultural community and the Honduran economy can take advantage of this work.

The long-term breeding goal is the development of improved maicillos criollos or local tropical sorghums. Because the maicillos are very photosensitive, this work can only be accomplished in the area in which the maicillos are grown in Central America. Improvement of the maicillos begins with crossing improved introduced sorghums with local tropical varieties. Progeny that have desirable characteristics are then selected. The desirable characteristics of the introduced sorghums that are being incorporated into the maicillos population include: shorter plant height, longer heads, higher grain yield potential, resistance to plant diseases like downy mildew, grey leaf spot, MDMV, charcoal rot, and acremonium wilt. The principal characteristic of the maicillos that is being retained is its degree of photosensitivity (lateness in maturity), which is key to farmer acceptance and introduction into traditional maiz-maicillo farming systems. These shorter maicillos not only are expected to be higher yielding, but the performance of the associated crops is also expected to improve because of reduced competition. An important logistical advantage of shorter maicillos is that production of hybrid seed can be mechanized. These improved maicillos will be of regional importance in that they will be adapted to El Salvador and Guatemala as well as Honduras. They hold the promise of breaking the 1 ton/ha yield threshold that has characterized the maicillos since their introduction in the late 18th century. The dwarf maicillos are expected to bring revolutionary changes to the region's agriculture and improve current sorghum production, productivity, and quality.

CONSTRAINTS: Although AID/H and AID/ES have supported these activities with ESF which they provide to the collaborative institution, much of these monies have been transferred, once in the institution's general fund, to support other projects. New MOU's that address the administration of

mission funds designated to support INTSORMIL activities are being drawn up. A technical constraint is that dwarf maicillos tend to be earlier maturing than taller maicillos. We believe this linkage will be broken within the next two years.

2. Maintain a base of operations in Honduras (prime site) and facilitate collaborative research between INTSORMIL principal investigators, graduate students, and host country scientists.

Honduras is the geographical center of the Central American sorghum belt where the maicillos criollos are typically grown. Its subsistence economy relies heavily on sorghum and on-going research is already providing important gains in several areas of sorghum production.

3. Provide training to host country nationals and supervision of INTSORMIL graduate students.

Project Output

Immediate

Breeding: Release of sorghum variety Sureño, a dual purpose grain/forage cultivar. Sureño was introduced in 1982 as an entry in the 1982 Grain Weathering Test (GWT) distributed by Dr. D.T. Rosenow of the Texas Agricultural Experiment Station. This introduction was a direct result of the collaborative agreement between SRN and INTSORMIL. Attributes of Sureño include high grain yield potential, excellent grain quality for tortillas and atole, resistance to pathotype '1' of *Peronosclerospora sorghi* the causal agent of downy mildew, resistance to maize weevil (*Sitophilus zeamais*), and resistance to grain molds and weathering. Sureño is recommended for 10 to 20 percent of total sorghum acreage in Honduras. Its pedigree is [(SC423 x CS3541)E35-1]-2. Synonyms for Sureño are 82GWT-210, VG-146, M62650, and ICSV-110.

Pathology: Mr. George Wall (TAM-24 and TAM-31) completed a two year study that characterized major sorghum diseases in the two main sorghum production areas in Honduras. The importance of diseases varied according to ecogeographic zone; e.g., the order of importance of diseases in Choluteca were 1) foliar diseases like grey leaf spot (*Cercospora sorghi*), zonate leaf spot (*Gloeocerospora sorghi*), and oval leaf spot (*Ramulispora sorghicola*), 2) virus (MDMV race B and SCMV race A,B, or D), 3) acremonium wilt (*Acremonium strictum*), and 4) downy mildew. In Comayagua, the order of

importance of diseases was 1) downy mildew, 2) foliar diseases, 3) acremonium wilt, and 4) virus. Ten antiserums developed by Dr. Toler (TAM-24) were used to identify viral race. As a result of these studies, the following sources of resistance were also identified:

1. Downy Mildew: The improved varieties CS3541, SC170-6, RTx430, SC414, Q1-3.

2. Grey leaf spot and acremonium wilt: The improved varieties SC326-6, 77CS1.

3. Oval leaf spot: The Maicillos criollos San Miguel #1, MC-3.

Entomology: Mr. Marco Castro (MSU-5) completed a two year study of the population dynamics of the fall armyworm (Spodoptera frugiperda) in the maiz-maicillo farming system. Results indicate that the FAW prefers maize to sorghum. However, FAW population densities in maiz-maicillo intercropping systems were less than when maize and sorghum were monocropped. The mermithid nematode was the most common parasite of FAW larvae, parasitizing up to 83 percent of the individuals. The braconid egg-larval parasite Chelonus insularis (Cresson) was of minor importance. Insecticide evaluation for control of FAW larvae indicated that methyl parathion was still an effective control. This implies that these particular insects apparently do not contribute as a migratory source to FAW populations in the United States, which are resistant to methyl parathion.

Cereal Quality: After two years of tortilla cooking evaluation, 23 improved sorghum varieties have been identified to possess excellent properties for utilization in the preparation of tortillas. Seed of these varieties has been increased to form a tortilla nursery. The nursery has been distributed to Costa Rica, El Salvador Guatemala, Mexico, Nicaragua, and the United States.

Consultation by Ms. Celena Choto (TAM-26) with the Honduran sorghum program resulted in the development of two recipes for making atole (thin porridge) from sorghum. One recipe required milk while the other did not. These recipes will be used in the selection and development of sorghum varieties that are acceptable for atole utilization. Also, traditional cooking methods were standardized for the preparation of tortillas from pearled sorghum grain (pericarp removed). These methods were used to determine that pearled grain provided several advantages over whole grain; e.g., pearled grain was easier to process into tortillas (less labor) and it

required one-half the cooking time (less firewood). The color and flavor of the tortillas made from pearled grain was equivalent to the whole grain tortillas.

AID/H: The AID mission in Honduras has provided L. 100,000 to SRN to support INTSORMIL activities in Year 6. Funds were budgeted for general operational purposes of the national sorghum project.

In Progress

Breeding: TAM-31 and Ing. Renè Clarà (CENTA El Salvador) have formed a joint yield trial and breeding nursery to accomplish a common goal, the development of dwarf maicillos. These nurseries and trials are being grown in Guatemala, El Salvador, and Honduras. This collaborative work serves to distribute elite germplasm, develop widely adapted maicillos, and compare the success of individual breeding programs. Most advanced dwarf maicillos have entered F6 generation. Promising lines have been yield tested in Guatemala, El Salvador, and Honduras.

Eighteen elite maicillos criollos were collected by Dr. D.T. Rosenow from the Honduran germplasm bank and placed into the Texas A&M sorghum conversion program where they will be converted into short statured, early maturing lines. Many of the maicillos expressed resistance to foliar diseases, good standability, and excellent cereal quality. Conversion of these materials will make this germplasm available to breeders throughout temperate zones. Normally, tropical sorghums do not flower in temperate zones because of longer day lengths that exist there.

Entomology: Mr. Carlos Trabanino (MSU-5) began a two year study of soil insect pests and early season insect pests on maize and sorghum in southern Honduras. Objectives of his research are 1) to identify those insects that attack the seed and seedlings of maize and sorghum, 2) to determine their density and assess their damage in different farming systems, 3) develop an adequate control method for main soil and seedling insect pests, and 4) train local extension workers in sampling methods, identification of insects, and control strategies.

Mr. Ronaldo Sequeira (TAM-25) began biological control studies to improve the management and ecological understanding of stemborers (Diatraea sp.) on sorghum and maize in Honduras. Objectives of his research are: 1) to identify stemboring pyralid pests and associated parasite species, 2) to describe their geographic distribution and seasonal occurrence in southern

Honduras, 3) to quantify the population dynamics of Diatraea lineolata (Walker) and its natural enemies in different maiz-maicillos cropping systems, 4) to introduce and release the braconid parasite Apanteles flavipes into cultivated fields in an attempt to establish a new mortality factor on Diatraea sp., and 5) evaluate short term effects of the release.

Networking Activities

Workshops and Scientific Meetings Attended:

- INTSORMIL farming systems workshop in CIMMYT, Mexico, September 16-22, 1984.
- III Annual CLAIS meeting; San Salvador, El Salvador; November 18-23, 1984.
- XXXI Annual PCCMCA meeting; San Pedro Sula, Honduras; April 16-19, 1985.

Scientist Exchange Funded by TAM-31:

- Ing. Renè Clarà (CENTA); travel from El Salvador to Honduras; December 17-20, 1985; to select sorghum nurseries at Comayagua and Choluteca and develop a collaborative work plan between his project and TAM-31 for the development of dwarf maicillos.
- Ing. Renè Clarà (CENTA); travel from El Salvador to Lubbock and College Station, Texas; February 17-23, 1985; to participate in the Sorghum Improvement Conference of North America (SICNA) and the INTSORMIL Principal Investigators Conference in Lubbock and to visit Texas A&M University.
- Ing. Renè Clarà and Ing. Ricardo Ortiz (both CENTA); travel from El Salvador to San Pedro Sula, Honduras; April 16-19, 1985; to participate in the XXXI Annual PCCMCA meeting.

Germplasm Distributed:

Tortilla Nursery: A Tortilla Nursery consisting of 23 food type varieties was distributed to El Salvador, Guatemala, Mexico (two locations), Nicaragua, Costa Rica, and Texas A&M University in April 1985. These elite materials were determined by traditional cooking methods to have excellent tortilla making properties. The purpose of this nursery was to make this germplasm available to tortilla consuming areas in Central America and the Texas Agricultural Experiment Station.

Dwarf Maicillos: A dwarf maicillo nursery consisting of early generation entries was sent to El Salvador (610 lines), Guatemala (216 lines), and Honduras (two locations). The purpose of this activity was to distribute this dwarf maicillo germplasm among the national sorghum programs and to evaluate it under different environments which would enable the selection of widely adapted material.

Biological Studies: Twenty-one dwarf maicillos and three maicillos were sent to Dr. Henry Pitre, Mississippi State University, for evaluation of host plant resistance to fall armyworms.

Sorghum Conversion Program: Eighteen maicillos criollos were incorporated into the Sorghum Conversion program. They were assigned numbers SC1362 through SC1379.

Maicillos Criollos: Forty-eight elite maicillos criollos were collected by Dr. Rosenow.

Improved Varieties: Thirteen elite food type improved varieties were collected by Dr. Rosenow for the food type breeding nursery. Also, twelve male parental lines were sent to Ing. Renè Clarà, CENTA, El Salvador for evaluation in red seeded hybrid combinations.

Travel

- CIMMYT, Mexico; August 8-13, 1984; to consult with Compton Paul (ICRISAT) and Billie DeWalt (INTSORMIL/UK) about presentation of farming systems paper to be given at the INTSORMIL workshop at CIMMYT, Mexico.
- CIMMYT, Mexico; September 16-22, 1984; to attend the INTSORMIL Farming Systems Workshop and present joint paper with Mr. George C. Wall (Texas A&M University) and Ing. Rigoberto Nolasco (SRN) on breeding aspects of sorghum for Central American farming systems.
- CLAIS meetings, San Salvador, El Salvador; November 18-23, 1984; to represent INTSORMIL and present joint paper with Mr. George C. Wall (Texas A&M University) and Ing. Rigoberto Nolasco P. (SRN) on the advances of the Honduran sorghum program.
- INTSORMIL External Review, Tegucigalpa, Honduras; December 3-8, 1984; to present TAM-31 and INTSORMIL activities to external review team members Dr. Ricardo Bressani and Dr. Nancie Gonzalez, and other INTSORMIL and SRN officials.

- PCCMCA, San Pedro Sula, Honduras; April 16-19, 1985; to represent INTSORMIL and present a joint paper on sorghum tortilla quality and distribute germplasm of the newly formed Honduran Tortilla Nursery. Three other joint papers were presented by collaborative Honduran scientists.
- Lubbock, Texas; Sorghum Improvement conference of North America (SICNA); February 17-19, 1985; and the INTSORMIL Principal Investigators Conference; February 20-21, 1985.
- CENTA, El Salvador; May 6-10, 1985; to meet with Ing. Renè Clarà and other CENTA officials to discuss an MOU and complete joint work plans for the improvement of maicillos with Ing. Renè Clarà. Also to visit with AID/ES about its support of INTSORMIL activities in El Salvador.

Publications and Presentations

Publications

Castro, M., and H.N. Pitre. 1984. Development of fall armyworms from Honduras and Mississippi on sorghum and corn.

Castro, M., H.N. Pitre, D.H. Meckenstock, and R. Nolasco P. 1984. Insecticides evaluated for control of fall armyworm larvae on corn in Honduras.

Castro, M., H.N. Pitre, D.H. Meckenstock, and R. Nolasco P. 1984. Density of fall armyworm larvae in different cropping systems in southern Honduras.

Sequeira, R.A., and F.E. Gilstrap. 1984. Sondeo de barrenadores y paràtos asociados en el Sur de Honduras.

Wall, G.C., J. Craig, D.H. Meckenstock, R. Nolasco P., and R.A. Frederiksen. 1984. Efecto de *Peronosclerospora sorghi* en el rendimiento de *Sorghum bicolor* (L.) Moench. SRN.

Wall, G.C., P.L. Wall, J. Alexander, and R.A. Frederiksen. 1984. Estudios serologicos para identificar virus en sorgo de la region.

Wall, G.C., R.A. Frederiksen and R. Nolasco P. 1984. Identificacion de enfermedades de sorgo en Honduras 2nda parte.

Presentations

Hernàndez, R., R. Nolasco P., and D.H. Meckenstock. 1985. Ensayo exploratorio de densidad y fertilidad en el sorgo Sureño. Proceedings XXXI Reuniòn Anual del Programa Cooperativo Centroamericano para el Mejoramiento de Cultivos Alimenticios (PCCMCA). April 16-19. San Pedro Sula, Honduras. (In press).

Meckenstock, D.H., and R. Nolasco P. 1985. Anàlisis de calidad tortillera de vientiocho variedades de sorgo. Proceedings XXXI Reuniòn Anual del Programa Cooperativo Centroamericano para el Mejoramiento de Cultivos Alimenticios (PCCMCA). April 16-19. San Pedro Sula, Honduras. (In press).

Meckenstock, D.H., G.C. Wall, and R. Nolasco P. 1984. Aspectos de mejoramiento genètico en la investigaciòn sobre sistemas de cultivos en Honduras. pp. 68-75. In C.L. Paul and B.R. DeWalt (ed.) El sorgo en sistemas de producciòn en Amèrica Latina. CIMMYT/INTSORMIL, El Batàn, Mexico.

Nolasco P., R., D.H. Meckenstock, and G.C. Wall. 1984. Informe del Proyecto Nacional de Sorgo en Honduras. Proceedings III Reuniòn Anual de la Comisiòn Latinoamericana de Investigadores en Sorgo (CLAIS). November 18-24, 1984. San Salvador, El Salvador. pp. 144-149.

Ramirez, E., R. Nolasco P., and D.H. Meckenstock. 1985. Comportamiento de diesiseis sorgos graniferos en el sur de Honduras. Proceedings XXXI Reuniòn Anual del Programa Cooperativo Centroamericano para el Mejoramiento de Cultivos Alimenticios (PCCMCA). April 16-19. San Pedro Sula, Honduras. (In press).

Soler Flores, M.A., D.H. Meckenstock, and R. Nolasco P. 1984. Evaluation de ensayo regional de sorgos mejorados en el valle de Comayagua, Honduras 1984-B. Proceedings XXXI Reuniòn Anual del Programa Cooperativo Centroamericano para el Mejoramiento de Cultivos Alimenticios (PCCMCA). April 16-19. San Pedro Sula, Honduras. (In press).

Changes in Year 7 Project Research Plans from Year 6

1. Relocation of TAM-31 base of operations from the La Lujosa experiment station in Choluteca to the Escuela Agricola Panamericana (EAP) in Zamorano, Honduras.

The move of TAM-31 from La Lujosa to Zamorano will improve the collaborative research capabilities of INTSORMIL in Latin America and

enhance in-country student training and other institution building activities. The EAP provides an excellent base of operations because it has the infrastructure, resources, and critical mass of expertise necessary for conducting meaningful collaborative research. In addition, the school maintains a close association with AID and sponsors other AID research projects like the Integrated Pest Management project (MIPH) headed by Dr. Keith Andrews. The MIPH project currently collaborates with INTSORMIL principal investigators, Dr. Frank E. Gilstrap and Dr. Henry N. Pitre. TAM-31's presence will strengthen this cooperation. The EAP location, like La Lujosa, is close to the center of the geographical region in Central America where the maicillos criollos are grown. This is prerequisite to developing new maicillo germplasm. By operating from the EAP, TAM-31 will be provided with the autonomy that it needs to coordinate regional research activities. In addition to supervising INTSORMIL graduate students, TAM-31 will be involved with the EAP's student body which numbers more than 400 students from 20 Latin American countries. This exposure will be instrumental in identifying Latin students for graduate study at INTSORMIL universities. It should be noted that four of the five INTSORMIL graduate students that have conducted research in Honduras have been EAP graduates.

2. The addition of a biological control of Diatraea sp. project in El Salvador.

The biological control of Diatraea sp. in El Salvador is an example of the kind of collaborative research that can be coordinated from the EAP. It involves the following five institutions: CENTA, the University of El Salvador, AID/El Salvador, MIPH, and TAM-25 and TAM-31. A work plan has been drafted and a modest budget prepared. The workplan proposes: 1) An ecological study of Pyralid stemborers and their natural enemies; 2) a one week short course at Texas A&M University for two Salvadoran scientists to learn rearing methods of C. flavipes and its host, Diatraea sp.; and 3) the release of C. flavipes in El Salvador. The workplan also opens the door to a new collaborative institution in El Salvador, the University of El Salvador.

Increasing Resistance to Insects and Improving Efficient Nutrient Use by Genetic Manipulation for Improved Grain Sorghum Production

Project TAM-23

G.C. Peterson and A.B. Onken

Texas A & M University

Other Researchers

Host Countries:

Midge Resistance

Dr. Dan Meckenstock, INTSORMIL, Choluteca, Honduras

Mr. Rigoberto Nolasco, Recursos Naturales, Choluteca, Honduras

Dr. Rene Clara, CENTA, San Salvador, El Salvador

Dr. Rafael Reyes, CENTA, San Salvador, El Salvador

Dr. Jose M. Waquil, EMBRAPA, Sete Lagoas, Brazil

Dr. C.J. Rossetto, EMBRAPA, Campinas, Brazil

Dr. R.G. Nenzell, Queensland Department. Primary Industries, Warwick, Australia

Sugarcane Aphid

Mr. C.S. Manthe, DAR, Gaborone, Botswana

Efficient Nutrient Use

Mr. Issako Maribo Konate, DAR, Bamako, Mali

Mr. Oumar Niangado, DAR, Bamako, Mali

Mr. Manadou Simpara, DAR, Bamako, Mali

Dr. Bob Chase, TROPSOILS, Niamey, Niger

U.S:

INTSORMIL Projects - Extensive collaborative research has been conducted between this project and the following INTSORMIL projects: Teetes (Entomology - TAM26), Rosenow (Breeding - TAM22), Miller (Breeding - TAM21), Odvody (Pathology - TAM27 and Frederiksen (Pathology - TAM-24).

TROPSOILS - Collaborative research is underway between this project and the TROPSOILS project of Dr. C.W. Wendt.

Other:

Dr. R.R. Duncan (Georgia) - disease evaluation

Dr. B.R Wiseman (USDA) - midge resistance

Dr. A. Sotomayor (USDA) - midge resistance, pathology

Dr. T.L. Archer (USDA) - insect resistance

Linkages

Primary emphasis of international collaboration relates to midge resistance and efficient nutrient use. As the greenbug becomes an increasingly severe problem in South America, it is anticipated that further linkages will be established or strengthened, particularly with Rossetto and Waquil.

The sorghum midge is a severe pest in Central America (Ecogeographic Zone - Central America, Mexico, and the Caribbean), and a cooperative relationship has been established between this project and INTSORMIL - Honduras and Recursos Naturales. Data exchange and on-site visits showed that material developed in TAM-23 will be of use to the Honduran national program. The sorghum midge is particularly devastating in El Salvador. Drs. Clara and Reyes have expressed interest in collaborative research. Evaluation of germplasm developed by TAM-23 has resulted in the identification of several promising lines. As a result of these evaluations, new germplasm is being introduced into the El Salvador national program. An on-site visit to Honduras is planned for December 1985, to evaluate additional germplasm and coordinate research plans with scientists from both countries.

The sugarcane aphid is a serious insect pest in Botswana. Mr. Manthe, Botswana-DAR entomologist, will complete requirements for a Ph.D. in entomology by doing his field research in Botswana. The research is particularly important since cultural practices or insecticides do not offer an adequate means of control.

Collaborative research to evaluate sorghum for nutrient use efficiencies and fertilizer response as affected by drought has been initiated with Dr. Oumar Nrojads and Mr. Moriba Konate in Mali. Evaluation will take place at the Cinzana experiment station.

Within the U.S., research is being conducted with Dr. C.W. Wendt in identifying sorghum lines that are nutrient-use efficient and drought tolerant. We are evaluating the effects of soil fertility levels on dry

matter production per unit of water transpired. Susceptibility of nitrogen efficient sorghum lines to mite and greenbug infestations is also being investigated in cooperation with Dr. Tom Archer.

Ecogeographic Zones Most Benefited by Research

1. Central America, Mexico, and the Caribbean - insect resistance
2. West Africa - efficient nutrient use
3. South America - insect resistance
4. Southern Africa - insect resistance, efficient nutrient use

Objectives, Research Procedures, and Production/Utilization Constraints

Sorghum/Millet Constraints

Grain sorghum production in LDC and DC agricultural systems is constrained by a series of biotic and abiotic stress factors; the partial or complete alleviation of which will result in a higher yielding more stable production system. Insects are a problem in all areas of sorghum production, the severity of damage and the insect varying with location. The sorghum midge is the most widespread of all sorghum insect pests, being present in all areas of sorghum production. The greenbug is a New World pest and is rapidly becoming a severe problem in South America, and the sugarcane aphid is a pest in southern Africa. As local production agriculture systems change with new technology and cultivars, insects will become an increasingly severe problem. Development of cultivars resistant to insects as part of an integrated production and stress control strategy will readily integrate with other required inputs in an ecologically sound approach with large potential benefits in subsistence and mechanized agriculture. Host plant resistance to insects is a continual effort in response to a dynamic, continually changing production ecosystem.

It has long been assumed that water was the first limiting factor to plant growth in much of the semiarid tropics. However, Stroosnijder and his associates from the University of Wageningen have shown conclusively that due to a lack of nutrients, principally N and P, usable water is left in the soil profile even by native range plants. We have determined that on Alfisols in Texas (same soil family as many in SAT areas of Africa) usable water is left in soil zones of low nutrient supply. Consequently, increasing grain production under simultaneous low soil-water supply and

low soil-fertility is important as well as conditions of low soil fertility with adequate water.

Project Objectives

1. Obtain germplasm to be evaluated for resistance to arthropod pests.
2. Determine the inheritance of insect resistance.
3. Develop and release high yielding, agronomically improved sorghums resistant to selected insects with emphasis on the sorghum midge and greenbug.
4. Identify and define potential sources of more efficient plant nutrient extraction and/or utilization in sorghum.
5. Develop agronomically elite sorghums with improved nutrient use efficiencies.
6. Develop new methods for determining nutrient use efficiencies and study responsible mechanisms when appropriate.
7. Determine the effects of nutrient use efficiency on water use efficiency in sorghum.

Research Procedures

Germplasm is evaluated for resistance to the sorghum midge, greenbug, and Banks grass mite in elite breeding material from other programs, plant introductions, and lines from the sorghum conversion program. Inheritance of insect resistance is usually determined in the F_2 generation in field and/or greenhouse studies.

The resistance mechanism is determined when possible. Grain sorghum breeding material beginning with the F_2 generation is evaluated in diverse areas of Texas where the particular insect pest imposes adequate selection pressure. In these nurseries new sources of resistance are identified and breeding material selected for insect resistance and agronomic type. Selections are made for inclusion in the crossing program at Lubbock. Greenbug resistant selections are screened for seedling greenbug resistance in a winter greenhouse screening program in addition to field screening. Advanced elite materials are evaluated in nurseries at diverse locations in Texas for adaptation and reaction to other stress conditions. Material is provided to foreign cooperators for evaluation under their conditions.

Elite germplasm is provided to foreign cooperators to evaluate for resistance to insects not present in the U.S. Based on preliminary studies

additional material is provided that may be appropriate for their environmental conditions. Inheritance studies are conducted at the appropriate time to facilitate the research objective.

Diverse cultivars of grain sorghum obtained from the breeding programs at Lubbock are screened for N,P, and Fe use efficiencies in nutrient culture in greenhouse studies at Lubbock and field nurseries at Beeville, Berclair, Lubbock, and Bailey Co., Texas. The first lines screened are those that have shown promise in previous tests including nurseries in LDC's. Lines developed in the sorghum conversion program will also be screened.

Crosses will be made among lines for preliminary assessment of heritability. Based on heritability studies, crosses will be made among cultivars with high nutrient use efficiency and elite lines to produce breeding lines with high nutrient use efficiency and favorable adaptation and agronomic characteristics. Verification of selection will be made in the progeny of improved lines under field and solution culture screening.

Genotypes relatively different in N and/or P nutrient use efficiency will be grown in a greenhouse in soil deficient in the respective nutrient. Water use will be determined and water use efficiency defined as dry weight production per unit of available water. Water use efficiency for selected genotypes differing in N use efficiency will be determined in an N deficient soil under field conditions based on grain and forage yields, available water, and water used. Water use will be determined by neutron probe.

Problems Regarding the Achievement of Objectives

Objectives could be accomplished in a shorter time with an increase in funding sufficient to allow for program expansion, and with stability in funding over the years.

Project Output

Research Findings and Progress

Ten new sources of genetic resistance to the sorghum midge exist in lines from the Texas A&M sorghum conversion program. Some have levels of resistance as good as the best presently used sources. Preliminary evaluation of the lines in breeding populations indicates that SC572 will transmit its resistance genes to its progeny in a level high enough to be of use. Progeny appear to be acceptable agronomically.

Evaluation of elite breeding material has resulted in the identification of numerous lines with excellent resistance and good agronomic characteristics. Most of these lines are better than the presently used standard checks. Progress is being made, particularly with B-lines (females), to develop early maturing lines with adequate levels of resistance. Potential new short, early maturing B-lines with resistance derived from AF28 have been identified. Progeny with more than one resistance gene are being evaluated, although present results are inconclusive. Two new midge resistant random mating populations have been created. The populations are in the initial stages of evaluation and improvement.

New tropically adapted lines for greenbug biotype E resistance are in advanced stages of development. Some of the lines have other favorable characteristics in addition to greenbug resistance. Elite lines are being crossed with disease or drought resistant material to produce widely adapted lines with multiple stress resistance.

We have developed a screening technique and definition for nitrogen use efficiency in sorghum to the point of being useful to plant breeders in their programs. Research from our program has adequately demonstrated that sorghums differ significantly in their ability to produce grain under low available nitrogen conditions and that greenhouse screening techniques are inadequate. Our definition of nitrogen use efficiency is based upon yield and is given by the following equation:

$$Gw / Ns = Gw / Np \ (Np / Ns)$$

where: Gw = grain weight at black layer

Ns = available soil nitrogen (residual + fertilizer)

Np = total nitrogen in the plant at black layer

thus, this equation contains a factor for metabolic use efficiency (Gw / Np) and for uptake efficiency (Np / Ns). Nutrient solution cultures in greenhouse studies only assess the metabolic use efficiency. While both factors are necessary to describe grain production under low levels of nitrogen fertility, we have found that uptake efficiency is the dominating factor indicating that root system behavior differences in soil are important.

We have separated sorghum breeding lines (Tx430, BTx378, SC630; 11E, Tx2783, and B35-6) that produce significantly better than other (SC167,

SC207-14, and SC56-14) under both low soil nitrogen and low soil phosphorus when moisture is adequate. In addition we have identified sorghum breeding lines that yield relatively more (MB9-41 and SC630-11E) under conditions of both limited soil moisture and limited soil fertility with respect to nitrogen and phosphorus. Utilizing these lines in the future, we will develop definitions for grain production efficiency and screening techniques under this combination of conditions that are so prevalent and restrict grain production in most of the developing countries. Utilizing the screening techniques we will be able to determine the inheritance of these characteristics. Plant breeding programs aimed at increasing grain production in developing countries under combinations of low fertility and drought conditions will greatly benefit from both the screening techniques and knowledge of the mode of inheritance.

Research recently completed indicates that sorghum genotypes differ in water use efficiency based upon transpired water and that this trait can be influenced by soil fertility. If this is confirmed in subsequent studies it could be of great importance to plant physiologists and plant breeders.

Networking Activities

- July 16 - 20, 1984 - G.C. Peterson participated in the International Sorghum Entomology Workshop in College Station, Texas.
- October 4 - 11, 1984 - A.B. Onken participated in the Malian portion of a West African Sorghum Workshop.
- February 20 - 21, 1985 - A.B. Onken acted as local coordinator for INTSORMIL Principal Investigators Conference in Lubbock, Texas.
- April 4 - 11, 1985 - A.B. Onken participated in preparation for and attended meetings of the IER Science and Technology Commission meetings in Bamako, Mali, at which time INTSORMIL Collaborative research plans were discussed.
- October 13 - 17, 1985 - G.C. Peterson was the INTSORMIL representative on the planning committee for the "Sorghum Seed Production in Latin America: Problems and Solutions" Workshop in El Batan, Mexico,
- Research Investigator exchanges occurred during the above meetings.
- Germplasm and research information exchange - LDC support includes but is not limited to Brazil, Mexico, Honduras, El Salvador, Uruguay,

Argentina, Venezuela, Niger, Mali, Sudan, Botswana, India, Ethiopia, and Kenya.

- As country coordinator, A.B. Onken, has assisted in securing a vehicle for INTSORMIL projects in Mali along with negotiating a memorandum of agreement for fund transfers, and workplans and budgets for collaborative research.

Travel

International

- October 2 - 13, 1984 - A.B. Onken - Mali - Purpose was to negotiate and sign a funds transfer agreement with the IER and to develop a plan of work and budget for 1985-1986 for collaborative research between INTSORMIL and IER.
- April 2 - 13, 1985 - A.B. Onken - Mali - Purpose was to 1) develop plans of work and budget for 1985-1986 collaborative research between INTSORMIL and IER and TROPSOILS and IER, 2) present proposals at the science and technology meetings of IER for approval, and 3) submit the proposals to the Director General of IER for signing.

Domestic

- June 6 - 7, 1985 - A.B. Onken - Travel to Purdue for planning meeting for West African Regional Sorghum Workshop.
- July 15 - 20, 1984 - G.C. Peterson - College Station, Texas, International Sorghum Entomology Workshop, presented paper.
- November 25 - 30, 1984 - G.C. Peterson - Las Vegas, Nevada, American Society of Agronomy, presented paper.
- March 22 - 29, 1984 - G.C. Peterson - Mayaguez, Puerto Rico, evaluated breeding material.

Publications and Presentations

Publications

Archer, T.L. and G.C. Peterson. 1985. Banks grass mite resistance in sorghum. Annual Plant Res. to Insects Newsl. 11:36.

Becerra, M.I., G.L. Teetes, and G.C. Peterson. 1984. Combined effects of sorghum midge resistant hybrids and insecticidal control. Sorghum Newsl. 27:99-100.

Manthe, C.S., G.L. Teetes, and G.C. Peterson. 1984. Preliminary screening of sorghum for resistance to the sugarcane aphid in Botswana. Sorghum Newsl. 27:97-98.

Onken, A.B., and G.C. Peterson. 1984. Screening for nitrogen and phosphorus use efficiency in grain sorghum. Agron. Abstr. p. 216.

Peterson, G.C. 1984. Evaluation of converted exotic sorghum genotypes for resistance to sorghum midge. Agron. Abstr. p. 83.

Peterson, G.C., J.W. Johnson, G.L. Teetes, and D.T. Rosenow. 1985. Registration of midge resistant sorghum germplasm. Crop Sci. 25:372.

Peterson, G.C., J.W. Johnson, G.L. Teetes, and D.T. Rosenow. 1985. Registration of greenbug biotype C resistant sorghum germplasm. Crop Sci. 25:373.

Peterson, G. C., and G. L. Teetes. 1985. Sources of resistance to the sorghum midge. Annual Plant Res. to Insects Newsl. 11:36.

Waquil, J.M., G.L. Teetes and G.C. Peterson. 1984. Oviposition behavior of sorghum midge on resistant and susceptible sorghum hybrids. Sorghum Newsletter. 27:95.

Presentations

Onken, A.B. Paper entitled "Screening for Nitrogen and Phosphorus Use Efficiency in Grain Sorghum" presented at the American Society of Agronomy Meetings, November 26 - 30, 1984, Las Vegas, Nevada.

Peterson, G.C. Paper entitled "Breeding for Midge and Greenbug Resistance" presented at the International Sorghum Entomology Workshop, July 16 - 20, 1984, College Station, Texas.

Peterson, G.C. Paper entitled "Evaluation of Converted Exotic Sorghum Genotypes for Resistance to Sorghum Midge: presented at the American Society of Agronomy Meetings, November 26-30, 1984, Las Vegas, Nevada.

Changes is Project Research Plans

The economic threshold of midge susceptible sorghums which constitutes nearly all LDC sorghum production, is one midge per sorghum panicle. This project has identified a large number of resistance sources from converted exotic sorghum in the sorghum conversion program and developed elite agronomic lines with suitable levels of resistance. These midge resistant genotypes exhibit a higher economic threshold than susceptible genotypes and will produce economically viable yields under midge pressure.

Improved grain quality is important in LDC sorghum production and has received considerable emphasis by ICRISAT and the INTSORMIL Honduras program. The improved food quality types, of which the Honduran maicillos criollos are an example, consist of both photoperiod sensitive and insensitive lines and are extremely susceptible to midge. Combining midge resistance and improved food quality will result in a more environmentally fit genotype and will stabilize production.

Approximately 50 photoperiod sensitive maicillos criollos from Central America and about 30 improved grain quality sorghums, representing a range of photoperiod sensitive and insensitive genotypes, have been crossed onto genetic steriles in TP8R, a midge resistant R-line population, in a Texas winter nursery program at Isabela, Puerto Rico. Seed from the winter nursery has been sent to Honduras for initial selfing and random-mating. Collaborative research will involve this project, INTSORMIL - Honduras, and Recursos Naturales at the LaLajusa Station (Choluteca). The photoperiod sensitive population research will be done entirely in Honduras or other suitable tropical site(s) due to day-length requirements. The photoperiod insensitive population will alternate between semiarid, sub-tropical South Texas (for midge screening and some temperate adaptation) and Honduras or alternate suitable tropical locations (such as El Salvador) for tropical adaptation, disease resistance, and grain quality. The Texas location is important because of the natural severe midge pressure. Concurrent or alternating selection for both traits (midge resistance and food quality) will enable simultaneous improvement in both traits and result in a broad based, widely adapted population suitable for use in all areas of sorghum production. An on site visit is planned in December 1985, to evaluate research results and plan further collaborative research.

Breeding for Disease and Drought Resistance and
Increased Genetic Diversity
Project TAM-22

D.T. Rosenow, L.E. Clark, K.F. Schertz (USDA) and R.H. Smith
Texas A & M University

Other Researchers

R.A. Frederiksen - Texas A&M University, Pathologist
F.R. Miller - Texas A&M University, Breeder
G.C. Peterson - Texas A&M University, Breeder
L.W. Rooney - Texas A&M University, Cereal Chemist
G.L. Teetes - Texas A&M University, Entomologist
G.N. Odvody - Texas A&M University, Pathologist
C.W. Wendt - Texas A&M University, Soil-Plant-Water
G. Ejeta - Purdue University, Breeder
R. Voigt - University of Arizona, Breeder
L. Gourley - Mississippi State University, Breeder
R. Duncan - University of Georgia, Breeder
J. Eastin - University of Nebraska, Physiology
J. Axtell - Purdue University, Breeder Quality
D.J. Andrews - University of Nebraska, Breeder
L. Claflin - Kansas State University, Pathologist

Host Country

J. Narro, Pathology Breeding (INIA) Mexico
V. Guiragossian, Breeder (ICRISAT/CIMMYT)
M. Mengesha, Germplasm (ICRISAT)
L. R. House, Breeder (SADCC/ICRISAT)
L. Gourley, Breeder (CIAT)
R. E. Schaffert, Breeder (EMBRAPA) Brazil
J. Mann, Breeder (Tanzania/Kenya)

Host Country Project Personnel

Sudan: Abd Ellatif Nour, Sorghum Breeder (ARC)
Omer Hilu, Pathologist (ARC)

Honduras: Dan Meckenstock, Sorghum Breeder (INTSORMIL/Honduras)
Rigoberto Nolasco, Sorghum Breeder-Agronomist (Recursos Naturales)

Juan Guevara, Sorghum Breeder (Recursos Naturales)

Mali: Issaga Maribo Konate, Sorghum Breeder (DAR)

Oumar Niangado, Head of Plant Breeding (DAR)

John Scheuring, Sorghum Breeder (ICRISAT/Mali)

Niger: John Clark, Sorghum Breeder (Purdue/Niger)

Moussa Adamou, Sorghum Breeder (INRAN)

Summary

Disease and drought tolerant sorghums were developed, distributed, selected and used in the primary host countries of Honduras, Mali, Niger and Sudan. New sources of resistance were identified in new exotic introductions. A new dual purpose (grain/stover) variety from the TAM-22 program was increased for release in Honduras.

The combining of pre- and post-flowering drought tolerance proceeded well, with many new breeding materials generated and selected for advanced testing.

Extensive breeding support, in terms of travel, cooperative evaluation, and mutual planning was given to host country researchers in Honduras, Sudan Mali, and Niger.

The opportunities for developing hybrids from indigenous lines in developing countries were increased by the location of another cytoplasm that might be used to make female parents. The identification of lines with abundant and long trichomes could make possible additional improvement in shoot-fly resistance.

Using plant cell culture methods for sorghum improvement appears very encouraging. A method has been developed to use plant cell cultures to screen sorghum germplasm for potential pre-flowering drought tolerance. We are doing extensive testing to validate the value of this on sorghum breeding improvement programs. The system has also provided a very valuable potential to study fundamental mechanisms of osmotic regulation which will be extremely valuable in plant breeding programs.

Institutions

<u>Collaborating Host Countries</u>:

<u>Major</u>:

Sudan: Agricultural Research Corporation (ARC)

Honduras: Secretary of Natural Resources (Recursos Naturales).

Mali: SRVCO, Section of Food Crops Research, under the DAR, Division of Agronomic Research and the IER (Institute of Rural Economy; ICRISAT/Mali; TROPSOILS).

Niger: INRAN, Niger National Institute for Agricultural Research; Purdue/INRAN.

Secondary

Mexico: INIA; ICRISAT/CIMMYT

India: ICRISAT

Brazil: EMBRAPA

Southern Africa: SADCC

Colombia: CIAT

U.S: University of Nebraska, University of Arizona, Purdue University, Kansas State University, Mississippi State University, University of Georgia, USDA-Puerto Rico.

Linkages

Collaborative research agreements exist with Sudan (ARC), Honduras (RN), Mali (DAR, IER), and Niger (INRAN). Collaborative research emphasis is on drought resistance and disease resistance, as well as training, collecting sorghums, and technical assistance. Emphasis is on germplasm exchange evaluation, and testing, development of breeding materials, and short-term visits of U.S. scientists to host countries, and host country scientists to U.S.

Extensive linkages exist with all other Texas projects and with the Purdue program in Niger and Sudan. Other linkages in the form of screening and evaluation and germplasm exchange exist with PI's at Nebraska, Kansas, Mississippi, and Georgia.

Ecogeographic Zones Most Benefited from Research

Zone 2 - East Africa

Zone 4 - Central America/Mexico/Caribbean

Zone 1 - West Africa

Objectives, Research Procedures and Production/Utilization Constraints

Sorghum/Millet Constraints

Diseases and drought are serious constraints to sorghum production world-wide. Diseases are often region- or site-specific and on-site

evaluation is necessary to determine severity and possible race differences. Most of the internationally important diseases are present and are also constraints to sorghum production in Texas, especially downy mildew, charcoal rot, grain mold (weathering), head blight and MDM virus. Other diseases such as leaf blight, rust, zonate, grey leaf spot and acremonium wilt are also present in Texas. There is a constant need for new sources of resistance to pests. Drought stress is probably the major constraint to sorghum and millet production in the world as well as in the U.S. Large differences exist among sorghum cultivars for drought tolerance, so that much progress is possible in developing varieties with improved levels of tolerance to drought. Texas has a semiarid environment plus high temperatures and is ideal for large scale field screening and breeding for improved drought tolerance.

The major constraint in much of Sudan is drought, and drought related production problems. Moisture stress related charcoal rot is a serious disease problem. In Honduras, diseases are a major constraint, including downy mildew, grain mold (weathering) and the recently identified disease acremonium wilt. The food quality-weathering resistance complex is also important. Drought is not nearly as important in Honduras and the Central American region as in sub-Saharan Africa. However, dry periods do occur, so drought tolerance is an important trait. Improvement in the photoperiod sensitive, food-type maicillos criollos is a unique challenge, and most of the research must be done under host country conditions. Improvement in the photo-insensitive combine-type sorghums used over much of Central America can result directly from use of new Texas-adapted germplasm. Mali and Niger are both drought prone areas, so drought tolerance, including both the pre- and post-response, is very important to both countries. The sorghums of West Africa are unique and high yielding, improved introductions often fail due to grain quality - head bug - grain mold complex, stand establishment problems, or improper maturity. Thus, much of the collaborative research in West Africa is in the realm of providing source materials along with studying the various traits of the West African Guineense type sorghums which makes them uniquely adapted to the more humid areas of West Africa. In the northern areas where drought stress is severe, earlier, less-photosensitive material is needed, and the non-Guinea sorghums generally

perform well. Thus, U.S. developed drought tolerant materials can have direct application to those areas.

There is a constant need for sources of resistance to pests, such as shoot fly, as well as to diseases. Cytoplasmic diversity is needed where hybrids are used. Diversity and new sources are often derived from new collections and wild species.

Project Objectives

1. Screen and evaluate basic sorghum germplasm sources for resistance to diseases of importance internationally and for drought tolerance.

2. Develop disease resistant, high yielding cultivars with resistance to downy mildew, grain mold (weathering), anthracnose, charcoal rot, head blight, leaf blight, rust, zonate, grey leaf spot, and viruses.

3. Develop through breeding and selection, agronomically desirable types with superior combinations of pre- and post-flowering drought tolerance.

4. Distribute, evaluate, and utilize improved disease and drought resistant breeding materials, and new germplasm sources in LDC's.

5. Develop early generation breeding materials involving disease and drought resistance specifically for selection and use in LDC's, with emphasis on Honduras, Sudan, and Mali.

6. Identify new cytoplasms and new germplasm sources, including wild types, with superior characteristics.

7. Determine the genetic control of desirable characteristics in new germplasm and evaluate their potential usefulness in sorghum improvement.

8. Using tissue culture techniques, select for cultivar differences and for variation among regenerated plants for drought, aluminum and salt tolerance, and relate findings to whole plant (field) tolerance.

Changes in Objectives from Previous Year

More emphasis on developing early generation breeding materials involving disease and drought resistance specifically for selection and use in host countries. Added research on wild species, with emphasis on characteristics other than cytoplasmic.

Research Procedures

1. Converted and partially converted lines from the Sorghum Conversion Program, exotic lines, and breeding materials were screened and evaluated

for sources of resistance to internationally important diseases in a cooperative program with pathologists. Emphasis was on large disease-screening nurseries utilizing natural infection in south Texas. Large field drought screening nurseries in west Texas were used to screen germplasm, similar to that described above, for drought tolerance, supplemented by rainout shelters and irrigation gradient systems.

2. Breeding material was generated from crosses among various disease resistant sources, agronomically elite lines, and new sources of resistance. The material was screened and selected in large field disease screening nurseries described above. Advanced generation materials were incorporated into various standard, replicated trials for more critical and extensive evaluation at several locations in Texas, outside Texas, and in other countries where diseases and competent personnel are available. Random mating populations were also utilized in breeding for head smut and certain leaf diseases.

3. Crosses among identified sources of drought tolerance (i.e., pre- and post-flowering drought tolerance) and elite, high yielding lines were made. Progeny were selected under field conditions for pre- and post-flowering drought tolerance at several locations in west Texas which vary in their degree and time of moisture and heat stress. Selected materials were evaluated at additional locations in Texas, and under rainout shelters, and under an irrigation gradient system.

4. Selected materials from the disease resistance and drought tolerance breeding programs (described in Nos. 2 and 3 above) were distributed to LDC's and selected developed countries for selection and use.

5. Introductions from LDC's, including locals and improved breeding lines with desirable drought or disease resistance, or specific grain or plant traits, were crossed in Texas to appropriate elite U.S. lines and elite breeding materials. Seed of the F_2 and other early generation bulks were sent to the LDC's, especially Honduras, Sudan, and Mali, for selection of appropriate traits and adaptation. Assistance is provided, as time and travel permit, in the selection and evaluation of such breeding material in the host country.

6. Conducted field tests of newly identified cytoplasms.

7. Introduced new germplasm, including wild species and evaluated it for trichome characteristics that might impart resistance to shoot fly.

8.a. Drought: Callus growth from 10 cultivars of sorghum was measured on media with increasing levels of polyethylene glycol (PEG) as an osmoticum in the medium to determine whether, among these cultivars at the cellular level, differences in response to osmotic stress existed. These cellular ratings were compared to field ratings from the 10 tolerant - to susceptible cultivars when grown under drought conditions to determine whether cellular ratings corresponded to differences in drought tolerance at the plant level.

b. NaCl: Plants regenerated from NaCl-tolerant sorghum callus were grown to maturity in the greenhouse. Self-pollinated seed collected from them were germinated and screened in hydroponics for NaCl-tolerance along with seed from the parent plants.

c. Aluminum: Same as for NaCl.

Problems Regarding Achievement of Objectives

Unable to participate in germplasm expedition to southern Sudan because visa request denied.

Filling seed requests consumes more time each year. An increased budget allocation for a Research Associate to just work with seed increase, maintenance, and distribution would be very helpful.

Project Output

Research Findings

1. A cultivar selected from the Grain Weathering Test (GWT) was proposed for release in 1985 in Honduras as a dual purpose variety called "Sureno." The grain possesses excellent tortilla quality.

2. Several disease resistant sorghum lines (resistance to downy mildew, charcoal rot, fusarium head blight, grain mold, leaf blight, rust, anthracnose, head smut, grey leaf spot, zonate, MDM) have been distributed to LDC's. They are ready for formal release in the U.S.

3. Several lines possessing high levels of pre- or post-flowering drought tolerance, especially new B lines similar to BTx623 and BTx625, have been sent to LDC's for evaluation. The new "stay-green" (post-flowering drought tolerant) females could produce hybrids with much improved charcoal rot and lodging resistance. Hybrids with these new male steriles are under extensive evaluation in 1985. Several of these new females, as well as other restorer lines, are ready for release in the U.S.

4. Several Guineense lines (converted and introduced) were identified as possessing high levels of pre- and post-flowering drought tolerance, including CSM-63, SC2654-14, SC283-14, and SC279-14. Other sorghums identified as possessing excellent pre- and post-flowering tolerance in the U.S. included the Purdue line P898012 and P954035. They also performed well in Niger and Sudan.

5. Another source of cytoplasm was determined to be different as indicated by restoration responses in F_1 progeny.

6. Results established that cultivar differences in growth of callus in response to PEG exist with some being more tolerant to osmotic stress than others. Results suggest that PEG-induced osmotic stress on callus cultures can be used to screen sorghum cultivars for potential early-field (pre-flowering) drought tolerance. This also implies that a component of early-field drought tolerance in sorghum may have a cellular basis.

Research Progress

1. Thirty new germplasm lines, some of which are wild species, were introduced and are being increased. Among these are some with different trichome characteristics including length, density, and location on the leaf that might affect shoot-fly resistance.

2. Tissue Culture

NaCl

a) Salt-selected plants had slightly longer roots than the parents when grown in normal nutrient solution.

b) In nutrient solution containing NaCl, the salt-selected plants had higher shoot dry matter than the parental cultivar. Roots of both parent and salt-selected plants responded identically when grown in NaCl-containing nutrient solution. The results suggest that NaCl callus selection did result in plants which were better than parents for nutrient uptake and higher dry matter accumulation in the presence of NaCl.

Aluminum

a) Analysis of the data is in progress. The preliminary results do not indicate cell culture selection has an advantage.

3. New early generation breeding lines, combining pre- and post-flowering drought tolerance, performed well, and will undergo extensive evaluation in the U.S. and LDC's next year.

4. New disease resistant breeding material looked excellent with high levels of resistance to downy mildew (new pathotype 3), anthracnose, charcoal rot, rust, and grain mold (weathering). These will be distributed to LDC's for planting in 1986.

5. New sources of drought resistance were identified in introduced sorghums from Sudan, Mali, and Niger.

Networking Activities

- Rene Clara (El Salvador), Rigoberto Nolasco (Honduras), and Wilfredo Diaz (Honduras) visited Texas A & M University and participated in the SICNA meetings and annual INTSORMIL PI Conference.
- Extensive germplasm exchange occurred with Sudan, Mali, Niger, Honduras, and Mexico. This was followed up by travel to Sudan, Mali, Niger, and Honduras for mutual evaluation, selection, and planning. Other countries involving germplasm distribution are El Salvador, Brazil, SADCC countries, and Kenya.
- Assisted the country coordinator in purchasing research equipment for the sorghum breeder in Sudan.
- Assisted AID in hiring sorghum seed production expert for Sudan - summer 1984 and summer 1985.
- Participated in EEP reviews in Sudan and Honduras.
- Made plans for Ecogeographic Zone Technical Workshops to be held in Honduras, Niger, and Sudan in fall of 1985.

Travel

- September 27 - October 4, 1984 - D. T. Rosenow - Niger - to evaluate sorghum breeding material and make plans for future research, germplasm exchange, and drought trials.
- October 5 - October 11, 1984 - D. T. Rosenow - Mali - to evaluate sorghum research and make future research plans.
- October 28 - November 11, 1984 - D. T. Rosenow - Sudan - evaluate sorghum breeding materials, plan future research, and participate in EEP review.
- December 2 - December 12, 1984 - D. T. Rosenow - Honduras - participate in EEP review, evaluate sorghum breeding materials, work on new Convenio, and develop new work plans for collaborative research.

- January 2 - January 17, 1985 - K. F. Schertz - Puerto Rico - conduct winter nursery research.
- March 7 - March 8, 1985 - D. T. Rosenow - Mexico - disease evaluation.
- March 22 - March 26, 1985 - D. T. Rosenow - Puerto Rico - disease ratings and selection in winter nursery.

Publications and Presentations

Bhaskaran, S., R.H. Smith, R.J. Newton. 1985. Proline and water stress in drought-tolerant and drought-susceptible cultivars of sorghum. Tissue Culture Assoc. In Vitro Cellular & Developmental Biology, Vol. 21 (3) 35.

Bhaskaran, S., R.H. Smith, and R.J. Newton. 1985. Physiological changes in cultured sorghum cells in response to induced water stress I. Free proline. Plant Physiol. Accepted.

Bhaskaran, S., K. Schertz, and R.H. Smith. 1985. Hydroponic screening of sorghum plants regenerated from NaCl-selected callus for salt tolerance. J. of Pl. Physiol. Accepted.

Clark, L.E. 1984. Overcoming environmental stress with production practices for sorghum. Agron. Abstr. p. 123.

Clark, L.E., A.J. Hamburger, and C.G. Obenhaus. 1985. Evaluation of sorghum hybrids in solid and skip-row plantings at Chillicothe. Texas Agri. Exp. Stn. Progress Report. Pr-4290. 11pp.

Krieg, D.R., and D.T. Rosenow. 1984. Genetic variation in gas exchange characteristics of sorghum. Agron. Abstr. p. 109.

Krieg, D.R., R.B. Hutmacher, and D.T. Rosenow. 1985. Genetic variation in gas exchange characteristics of Sorghum bicolor (L.) Moench. Crop Sci. (Submitted).

Rosenow, D.T., L.E. Clark, F.R. Miller, and C.A. Woodfin. 1984. Progress in breeding for drought tolerance in sorghum. Agron. Abstr. p. 86.

Smith, R.H., S. Bhaskaran, and F.R. Miller. 1985. Screening for drought tolerance in sorghum using cell culture. Crop Sci. Accepted.

Smith, R.H. Sorghum Cell Culture Screening - Seminars at Sungene and Monsanto, Colorado.

Rosenow, D.T., R.A. Frederiksen, and D. Collins. 1985. Inheritance patterns in new sorghums resistant to pathotype 3 downy mildew. Proc. 14th Biennial Grain sorghum Res. & Util. Conf. (SICNA) February 17-20, 1985, Lubbock, Texas.

Rosenow, D.T. 1985. Breeding for lodging resistance in sorghum. Paper presented at Annual Texas Seed Trade Association Research and Production Conference, January 29, 1985, Dallas, Texas.

Rosenow, D.T., C.A. Woodfin, and L.E. Clark. 1985. Breeding for the stay-green trait in sorghum. Proc. 14th Biennial Grain Sorghum Res. & Util. Conf. (SICNA) February 17-20, 1985, Lubbock, Texas.

Changes in Year 7 Research Plans from Year 6

Studies of trichomes will advance to determine how varied environment and plant development affect the expression of trichome characteristics.

More extensive evaluation of disease and drought resistant materials will take place in host countries.

More emphasis will be placed on developing breeding materials specifically for host country use.

Development of Agronomically Superior Germplasm Including Varieties, Hybrids, and Populations Which Have Improved Nutritional Value and Good "Evident" Grain Quality

Project PRF-3A

John D. Axtell

Purdue University

Other Principal Investigators

Edwin T. Mertz, Nutritionist

Gebisa Ejeta, Sorghum Breeder

John Clark, INRAN/NCRP Sorghum Breeder

Lee House, SADCC/ICRISAT Project Manager

Sam Mukuru, ICRISAT Sorghum Breeder

Mousa Adamou, INRAN Sorghum Breeder

Other Researchers

Allen W. Kirleis, Cereal Chemistry

Larry Butler, Biochemist

Mohamed Hassen, Purdue Laboratory Analyst

Terry Lemming, Purdue Field Technician

Tom Tyler, Purdue Graduate Research Assistant

Emmanuel Monyo, Purdue Graduate Research Assitant

Nora Mason, Purdue Graduate Research Assistant

Osman Ibrahim, ARC/Sudan Sorghum Breeder

R. Jambunathan, ICRISAT Biochemist

Vartan Guiragossian, ICRISAT Sorghum Breeder for Latin America

Lynn Gourley, Mississippi State/CIAT Sorghum Breeder

David Andrews, University of Nebraska Millet Breeder

T. Obiliana, SADCC/ICRISAT Sorghum Breeder

Bruce Maunder, DeKalb/Pfizer Sorghum Breeder

Kay Porter, Pioneer Sorghum Breeder

Joseph Mushonga, Zimbabwe Sorghum Breeder

George Graham, Nutritionist/Johns Hopkins University

T. Bezuneh, Research Coordinator, SAFGRAD, OAU/STRC

Summary

The major focus of this project is to develop high yielding sorghum varieties with acceptable food quality and good nutritional value for

utilization in developing countries. A great deal of progress has been made in two areas.

1. We now understand many of the factors necessary for improving the nutritional value of sorghum through local village processing. Sorghum flour is less digestible than most cereal flours unless it is processed using local village procedures that have evolved over hundreds of years. We now understand the scientific reasons why processing is important. This knowledge will help us modify and improve the traditional processing methods and develop improved processing methods for utilization in other countries where sorghum is used as a feed or food grain.

2. Relatively little is known about sorghum breeding and genetics in comparison to other major staple cereals. Genetic studies contribute to the development of improved breeding methodologies for sorghum improvement. New knowledge has been gained by this project about utilization of sorghum populations in breeding programs. Traits such as heritability of grain hardness and heritability of seedling cold tolerance are important for both the United States and developing countries. Selection methods for improving these important traits have been developed.

Institutions

Collaborating Host Countries:

Niger - Niger/INRAN and Purdue Niger Cereals Research Project
Sudan - Agricultural Research Corporation (ARC)
Zimbabwe - ICRISAT/SADCC Sorghum and Millet Improvement Program
Colombia - CIAT
India - ICRISAT
Mexico - CIMMYT
Burkina Faso - SAFGRAD

U.S.: Purdue University, Mississippi State University, the University of Nebraska, Texas A&M University, DeKalb/Pfizer Genetics, Pioneer Seed Corporation

Linkages:

The primary linkages of PRF-3A are with Niger, Sudan, and SADCC. Collaborative research programs are in progress with INRAN in Niger, ARC in Sudan, and the Sorghum and Millet Improvement Program in Southern Africa (SADCC).

More of the breeding activity will be conducted in developing countries, much of it in Niger, Sudan, and, perhaps, with the ICRISAT Southern Africa and East Africa regional centers. Gebisa Ejeta will continue his collaboration with Sudan on Striga tolerance and drought tolerance. He and John Axtell plan to spend considerable time and effort working with Sudanese scientists on grain quality using pedigree breeding as well as population and hybrid development. A major effort will be made to develop A&B lines with good grain quality, Striga tolerance, and drought tolerance which are adapted to Sudan and Niger.

John Axtell will continue breeding for good grain quality in elite sorghum cultivars which also have African adaptability, good yield, and other needed agronomic traits. Characteristics such as kernel hardness have now been identified which will facilitate breeding for grain quality. This program also will be carried out jointly with Niger and Sudan. Much of the breeding work will be done in Niger with backup using laboratory facilities at Purdue and Purdue winter nursery facilities. Screening and trials will be conducted at three locations in Niger, as well as in Sudan.

Secondary research linkages have been developed with ICRISAT, SADCC, Mississippi State University, and Texas A&M University.

Ecogeographic Zones Most Benefited by Research

West Africa - Niger

SUDANO-East Africa - Sudan

Objectives, Research Procedures, and Production/Utilization Constraints

Sorghum/Millet Constraints

The major constraint in Niger and Sudan is the development of well-adapted varieties and hybrids which will tolerate drought and produce grain which is acceptable for the local food products in these countries. The interaction between variety, methods of food processing, and nutritional value are major objectives of this project. The recent results discussed under Project Output illustrate the importance of local processing on nutritional value of local sorghum food products. In these studies with children in Peru, sorghum flour cooked as a thick gruel gave nitrogen digestibility values of 46 percent, but when prepared as the traditional Sudanese sorghum food, Nasha, the nitrogen digestibility increased to 74%. This suggests that thin fermented porridges which are widely used in eastern

and southern Africa are very important for obtaining the maximum digestible protein and energy from sorghum grain.

Year 6 Objectives

1. Identify, develop, and evaluate sorghum lines or mutants with improved nutritional quality and superior food grain quality using both chemical and biological methods.

2. Develop agronomically elite sorghum lines for Niger and Sudan with good adaptability, good grain quality, good drought and *Striga* tolerance, and improved yield potential.

3. Develop improved B-lines for adaptation in Niger and Sudan. These can provide a genetic base for future hybrid production in these countries.

4. Investigate the potential for developing varieties of sorghum with high nutritional value and good food properties for potential use as nutritional foods for young children, pregnant women, and nursing mothers.

5. Train LDC personnel in plant breeding and genetics.

Changes in Objectives from Previous Year

The major focus for Years 6 and 7 will be to ascertain the nutritional value of thin fermented porridges as used in eastern and southern Africa, and also to determine what genetic characteristics are necessary in a new variety to successfully prepare these porridges. For example, it is generally known that local varieties have a high diastatic power which is essential for fermentation with either yeast or lactobacillus. Many improved sorghum varieties lack this characteristic and this may be responsible for low adoption rate of improved varieties. Joe Mushonga will be developing rapid assays for diastatic power and studying inheritance of diastatic activity in sorghum cultivars. Dr. Sam Mukuru, ICRISAT, will join us for a one year leave to study these problems. He brings great expertise in sorghum breeding and also in local processing information from his home village in Uganda. These studies will be combined with the ongoing program to develop well adapted, high yielding sorghum varieties.

Research Procedures

PRF-3A has developed extensive expertise in laboratory facilities, field facilities, and staff expertise to study these interdisciplinary problems in collaboration with scientists in Niger, Sudan, and Zimbabwe.

Problems Regarding Achievement of Objectives

The major obstacle is coordination of laboratory and field experiments at Purdue with local food processing technologies available in Africa. These have been largely overcome by developing solid collaborative relationships in Niger, Sudan, and Zimbabwe, and by bringing African collaborators, like Joe Mushonga and Sam Mukuru, to Purdue University to learn the laboratory and field techniques prior to the conduct of their in-country research programs in Africa.

Project Output

Research Findings for Immediate Use

1. Nasha is a satisfactory weaning food when supplemented with relatively small amounts of lysine-rich foods such as milk, fish, or legumes. ["Digestibility and Utilization of Protein and Energy from Nasha, a Traditional Sudanese Fermented Weaning Food," by G.G. Graham, W.C. MacLean, E. Morales, B.R. Hamaker, A.W. Kirleis, E.T. Mertz, and J.D. Axtell. J. Nutrition (in press, 1985)]. Digestibility of sorghum nasha was 74 percent in infants compared with 82 percent from wheat, 72 percent from maize, and only 47 percent from cooked unprocessed sorghum. Thus, conversion of sorghum to nasha raised the digestibility from 47 to 74 percent and makes sorghum a satisfactory cereal for infants.

2. Normal sorghum and high lysine sorghum are good sources of tryptophan ["Tryptophan Levels in Normal and High Lysine Sorghums," by M.M. Hassen, E.T. Mertz, A.W. Kirleis, G. Ejeta, J.D. Axtell, and E. Villegas. Cereal Chemistry (in press, 1985)]. Normal sorghum proteins contain 0.8 grams of tryptophan per 100 grams of protein (this is the FAO recommended level for infants) and high lysine sorghum proteins contain 1.2 grams or 50 percent more than the recommended level. The extra tryptophan in high lysine sorghum can be converted by the child to niacin, a vitamin often deficient in the diets of children in developing countries.

3. Inheritance of kernel hardness in sorghum (Quantitative inheritance and correlations for agronomic and quality traits, including kernel hardness, in a random-mated population of sorghum. O.E. Ibrahim. Ph.D. Thesis, May, 1984). Two S_2 or S_1-derived families from each of 118 S_0 plants from Purdue random-mated population (PP18) of Sorghum bicolor (L.) Moench, were evaluated in a randomized complete-block design over one or two years. Genetic parameters were estimated for days to bloom, plant

height, lodging, panicle compactness, panicle weight, kernel weight, weathering, hardness, and vitreosity to assess breeding potential of the population. Additive variances were estimated using a weighted least-squares procedure. Additive variances were significant for all traits. The additive genetic coefficients of variation ranged from 2.9% for days to bloom to 25.5% for lodging. Narrow-sense heritabilities ranged from 0.349 to 0.734 for S_0-derived family selection (unit equals mean of S_2 progeny of two S_1/S_0 plants in two replications in either one or two years). Heritabilities ranged from 0.359 to 0.842 for S_1 -derived family selection (Unit equals mean of S_2 progeny of a single S_1/S_0 plant in two replications in either one or two years). Additive genetic (-0.737 to 0.839) and phenotypic (-0.649 to 0.710) correlations were high among agronomic traits and among quality traits, and low between agronomic and quality traits. Kernel hardness had strong correlations with weathering (negative) and vitreosity (positive). Direct selection responses (percentage of mean) ranged from 3.70 to 28.58% and from 5.10 to 37.10% percent for S_0- and S_1 -derived family selection, respectively. Correlated responses were lower than direct responses for most traits. However, for some pairs of traits the difference between the two responses was not large. The results suggested good potential for conventional breeding methods and early generation selection for all traits tested. More improvement would be expected from S_1-derived than from S_0 derived family selection.

4. Selection for seedling cold tolerance in grain sorghum ("Breeding sorghum for seedling cold survival and development," by R.K. Bacon, Ph.D. Thesis, December, 1983). A genetically broad-based random-mating grain sorghum [Sorghum bicolor (L.) Moench] population, Purdue Population 9 (PP9), was used as a source population in selecting for increased seedling cold tolerance. This selected population, Purdue Population 9 Cold Tolerant (PP9CT), was developed through a phenotypic recurrent selection procedure utilizing natural selection in early spring plantings. The progress made by the selection procedure was evaluated in early spring plantings in 1981 and 1982. In 1981 C_0-C_3 and two checks were evaluated in plots of 100 seeds using a randomized complete block design. In 1982 the C_4 generation was also included. The results from the first year indicated that a 10.6% increase in cold emergence had been accomplished after three cycles of selection. Data from 1982 indicated a 15.0% increase in cold emergence

after four cycles of selection. Regression analysis on the combined tests showed a linear response with a rate increase of 2.77% cycle $^{-1}$. Plant height, days to half bloom, seed color, and grain yield were evaluated in separate plantings from the emergence trials to determine the correlated responses in PP9CT following selection for seedling cold tolerance. Plant height showed a somewhat erratic response, days to half bloom decreased by 0.55 days cycle $^{-1}$, seed color increased by 0.13 color united cycle $^{-1}$, and grain yield increased by 197.7 kg/ha $^{-1}$ cycle $^{-1}$.

Grain sorghum [Sorghum bicolor (L.) Moench] traditionally has not been grown in as cool regions as maize (Zea mays L.), although both species are of tropical origin. Partial credit for maize's broader range of adaptation can be given to breeding efforts to improve seedling cold tolerance. Similar improvement of sorghum's cold tolerance would allow expansion of sorghum production into higher elevations and more temperate latitudes. Improved cold tolerance would also benefit current production where planting may be delayed due to danger of stand reductions from late cold periods or due to cool soils under minimum tillage.

Recently, much effort has occurred to improve the seedling cold tolerance in maize. Selection in two maize populations for seedling cold tolerance using a germinator improved laboratory germination but not field emergence. In order to improve cold tolerance under field conditions, Mock and Eberhart indicated that selection should involve simultaneous improvement in percentage emergence, emergence index, and seedling dry weight. Gain in percentage emergence accounted for 85 to 90% of the predicted advance. Using an index for these three traits recurrent selection was successful in improving cold tolerance in BSSS13 but not in BSSS2. Various indexes have been proposed to improve simultaneous selection for these traits.

Genetic variability in sorghum exists for cool-tolerance in the adult plant stage as well as for the temperature at which germination will take place. Field tests have also shown genotypic differences in cold germination and emergence. Using male sterility, recurrent selection can be utilized to improve traits such as seedling cold tolerance.

Research Progress

1. Cooking sorghum reduces the digestibility of sorghum prolamines ("Effect of Cooking on the Protein Profiles and Pepsin Digestibility of Sorghum and Maize," by B.R. Hamaker, E.T. Mertz, A.W. Kirleis, and J.D. Axtell. J. Ag and Food Chemistry, submitted in 1985). Sorghum proteins, measured by the Landry-Moureaux procedure and SDS Page electrophoresis, become much less soluble and less pepsin-digestible than the prolamines of maize. This could explain the lower digestibility of unprocessed cooked sorghum in children when compared with maize and other cereals.

2. Sorghum kafirins (prolamine) proteins are polymerized by cooking ("Polymerization of Sorghum Kafirin Proteins by Cooking," by B.R. Hamaker, A.W. Kirleis, and E.T. Mertz. Fed. proc., in press, 1985). The pepsin-indigestible proteins from cooked, lyophilized sorghum were put on an SDS-polyacrylamide gel and subjected to electrophoresis. The proteins were so large they could not enter the gel. When reduced, however, the proteins all migrated to the 20-25,000 dalton range characteristic of monomeric kafirin proteins. Therefore, kafirin polymerization accounts for the lower digestibility of cooked sorghum, and can be reversed with reducing agents.

3. Variation in agronomic traits of B-lines developed from random mating sorghum populations ("Variance Among A and B Lines Developed From Random Mating Sorghum Populations," by Joseph W. Keaschall. Ph.D. Thesis, May 1983). Sorghum A lines used for commercial hybrid production have a relatively narrow genetic base because only a few well-established lines are used for most commercial single crosses. Seventy-four F_5 B lines, along with accompanying A lines, have been developed from two random-mating sorghum populations, PP9 and PP18 (Purdue Populations 9 and 18, respectively). The objective of this study was to determine if significant variation exists among the B lines from PP9 and PP18 for yield, days to half bloom, plant height, and/or lodging and to estimate phenotypic and genotypic correlations between key agronomic traits. Selection for these traits will result in genetic gain if significant variation exists. A randomized complete block design was used, and the agronomic traits were evaluated by the variance components, mean values, and correlations between traits. The B-line families differed significantly for each trait measured and significant differences were found between PP9 and PP18 for all traits measured. Correlations indicated that tall plants tended to have high

yields; significant positive correlations were also seen between yield and lodging, and plant height and lodging. A significant negative correlation was found between lodging and flowering. The significant variation observed for the traits measured indicates that development of A and B lines through population improvement can add genetic diversity not available in present A lines used for hybrid production.

4. Selection for grain yield in a two-dwarf sorghum population ("Evaluation of Agronomic Characteristics in a Random Mating Two-Dwarf Sorghum Population Undergoing Recurrent Selection for Grain Yield," by Gregory S. Stuart, Ph.D. Thesis, May 1985). A genetically broad-based, two-dwarf, sorghum population, Purdue Population 10R (PP10R), was used as a source population in recurrent selection for increased grain yield. PP10R is a random mating R-line population developed in 1975. The selection cycle yield trials evaluated 200 C_0-, 500 C_1, and 275 C_2-S_1 lines in randomized complete block designs with two replications in 1978, 1980 and 1982, respectively. The selection procedure, initiated by R.P. Cantrell, identified the 40 percent highest yielding S_1 lines within day to bloom and plant height groupings. Following random mating of the bulked remnant seed of the selected S_1 lines, the C_1, C_2, and C_3 lines were produced. The selection procedure was an attempt to increase yield and maintain initial means and broad-based variability of other agronomic traits in PP10R. Traits observed were days to bloom, plant height, lodging, and yield.

Cycles per se were evaluated in 1982 (C_0-C_2) and 1983-1984 (C_0-C_3) in randomized complete block designs with 25 replications per year. Two different sets of S_1 lines were evaluated in 1983 and 1984. In 1984, 100 S_1 lines of each cycle (C_0-C_3) were evaluated in a randomized complete block design with two replications at two locations. The 1984 S_1 line yield trial was more effective in detecting differences in cycle means than were the cycles per se yield trials. Regression analysis on the 1984 S_1 line yield trial showed that yield increased linearly at a rate of 0.51 Mg ha^{-1} per cycle. Undesirable shifts also occurred toward increased days to bloom, plant height, and lodging score.

There was no indication that genetic variability was reduced for any of the agronomic traits studied. Estimates of genetic variance and narrow-sense heritability were high for all traits in all S_1 line trials. Highly significant, positive genetic, and phenotypic correlations were observed

between all pairs of traits. The selection process eliminated short plants and the shift toward increased plant height was greater than expected. Covariate analysis, using days to bloom and plant height as covariates, was conducted to remove the effects of these correlated characters from the analysis of yield. The results indicate that the recurrent selection process has produced real changes in the frequencies of yield genes.

Networking Activities

Workshops Planned and/or Attended

- INTSORMIL/INRAN/NCRP Sorghum and Millet Collaborative Research Workshop (Planning in Year 6, Implementation in Year 7). Attended by 45 INRAN/INTSORMIL/NCRP and USAID Mission staff, including Ambassador Bogosian. Proceedings in progress. Workshop program attached as Appendix A.
- Attend the INTSORMIL Graduate-Faculty Sorghum Workers Field Trip/Workshop, June 24-July 1, 1984. Attended by project graduate students. College Station, Texas.

Research Investigator Exchanges: A partial list of research visitors:

Dr. P. Pushpamma - India
Mr. Mamadou Ouattara - Niger
Dr. Robert Nicou - Burkina Faso
Dr. Sam Mukuru - India
Dr. R. Jambunathan - India
Dr. Lee House - Zimbabwe
Dr. Eliseu R.A. Alves - Brazil
Dr. Lytton Musselman - U.S.
Mr. Mousa Oumarou - Niger

Germplasm and Research Information Exchange:

Extensive germplasm has been provided to INRAN/Niger, ARC in Sudan, ICRISAT/SADCC Zimbabwe, plus numerous seed lots in response to specific requests.

Travel

International

- September 27-October 13, 1984. Gebisa Ejeta. Niamey, Niger, and Bamako, Mali. Evaluation of INTSORMIL Sorghum Nursery at Kollo, Maradi, and Bengoui in Niger. Visit ICRISAT Mali sorghum program.

- November 27-December 16, 1984. Nora Mason. Cali, Colombia. Harvest sorghum nursery and plant sorghum winter nursery at CIAT Station.
- January 6-23, 1985. John Axtell. Honduras, Peru, and Equador. Review project proposals for the Research Advisory Committee.
- February 3-16, 1985. Terry Lemming. Cali, Colombia. Pollinate winter sorghum nursery.
- March 15-24, 1985. John Axtell. Bulawayo, Zimbabwe. Member of the Technical Advisory Panel for the SADCC/ICRISAT Sorghum and Millet Improvement Program.
- March 21-May 5, 1985. Nora Mason. Cali, Colombia. Harvest, thresh, package, and transport sorghum seed to Purdue University for the sorghum project.
- July 10-August 5, 1985. John Axtell. Hyderabad, India; Soroti, Uganda; London, England. Meet with Dr. Swindale for in-depth review of ICRISAT Cereal Projects. Attend East African Sorghum and Millet Conference in Soroti, Uganda. Research planning session with Dr. Stuart, Plant Physiologist from University of London.
- August 26-October 3, 1985. People's Republic of China. Visit sorghum nurseries and teach classes at Henan Academy of Agricultural and Forestry Sciences. Present seminar at Jejing University.

Domestic

- June 24-July 1, 1984. Nora Mason, Emmanuel Monyo, Terry Lemming, and Gregory Stuart College Station and Corpus Christi, Texas. Attend the INTSORMIL Graduate/Faculty Sorghum Workers Field Trip/Workshop.
- July 9-13, 1984. John Axtell. Lincoln, Nebraska. INTSORMIL Global Plan Meetings with Darrell Rosenow, Elvin Frolik and Glen Vollmar.
- August 14-15, 1985. John Axtell. Kansas City. Attend the INTSORMIL Ecogeographic Zone Council Meeting.
- August 21, 1984. John Axtell. Chicago, Illinois. Attend an INTSORMIL Global Plan Meeting.
- September 13-14, 1984. John Axtell. Lincoln, Nebraska. Attend a Global Plan Meeting for INTSORMIL.
- September 22-23, 1984. John Axtell. Conrad and Bozeman, Montana. See the Purdue research sorghum plots and present a seminar on "Nutritional Quality Improvement in Sorghum" at Montana State University.

- October 17, 1984. John Axtell, Chicago, Illinois. Attend the INTSORMIL Board Meeting.
- November 25-29, 1984. John Axtell. Las Vegas, Nevada. Attended the American Society of Agronomy Annual Meetings. Gregory Stuart also attended and presented a paper.
- December 4-6, 1984. John Axtell. Washington, DC. Advised BIFAD on African Research programs for 1985. Panel for review of USAID Science Advisory Research Program.
- December 9-11, 1984. John Axtell. Washington, DC. AID Research Advisory Committee Meeting.
- December 17-18, 1984. John Axtell. Washington, DC. INTSORMIL collaboration on private enterprise Sudan Seed Project Proposal meeting at the African Bureau.
- December 18-19, 1984. John Axtell. Kansas City. INTSORMIL Country Coordinator Meeting.
- January 2-3, 1985. John Axtell. Attended NSF International Division Panel Meeting and conference with AID personnel.
- January 30-February 1, 1985. John Axtell. Washington, DC. Attended a panel meeting of the National Science Foundation to review the RAC project proposals.
- February 13-14, 1985. John Axtell. Washington, DC. Three year extension of USAID Sorghum Research Contract.
- February 20-21, 1985. John Axtell. Washington, DC. NSF Panel meeting on Technology Transfer in Agriculture. Briefing with Dr. N.C. Brady.
- April 20-24, 1985. John Axtell. Washington, DC. National Academy of Science Meetings. Meetings with AID Washington on sorghum research.
- April 26, 1985. John Axtell. Johnson, Iowa. Meet with Pioneer Overseas Corporation officials regarding Sudan Hybrid Sorghum Seed Venture.
- May 5-7, 1985. John Axtell. Washington, DC. Attend the Research Advisory Committee Meeting, USAID.
- June 10-12, 1985. John Axtell. Washington, DC. Met with the Assistant Administrator for the Africa Bureau, Mark Edelman and Robert Brown, AID Mission Director from Sudan.

Publications and Presentations

Refereed Publications

Ejeta, G., and J. Axtell. 1985. Mutant gene in sorghum causing leaf "reddening" and increased protein concentration in the grain. J. Heredity 76:301-302.

Ibrahim, O.E., W.E. Nyquist, and J.D. Axtell. 1985. Quantitative inheritance and correlations of agronomic and grain quality traits of sorghum. Crop Sci. 25:649-654.

Kitch, L.W., R.E. Shade, W.E. Nyquist, and J.D. Axtell. 1985. Inheritance of density of erect glandular trichomes in the Genus Meidcago. Crop Sci. 25:607-611.

Hassen, M.M., E.T. Mertz, A.W. Kirleis, G. Ejeta, J.D. Axtell, and E. Villegas. 1985. Tryptophan Levels in Normal and High Lysine Sorghums. Cereal Chemistry. In press.

Graham, G.G., W.C. MacLean, E. Morales, B.R. Hamaker, A.W. Kirleis, E.T. Mertz, and J.D. Axtell. 1985. Digestibility and utilization of protein and energy from nasha, a traditional Sudanese fermented weaning food. J. Nutr. In press.

Research Abstracts

Bacon, R.K., R.P. Cantrell, and J.D. Axtell. 1984. Population improvement for seedling cold tolerance in grain sorghum. American Society of Agronomy Abstracts, p. 57. November 25-30, 1984.

Stuart, G.S., J.D. Axtell, and R.P. Cantrell. 1984. Evaluation of Agronomic traits in a random mating two-dwarf sorghum population undergoing recurrent selection for yield. American Society of Agronomy Abstracts, p. 90. November 25-30, 1984.

Presentations

Axtell, J.D. 1985. Sorghum Nutritional Quality. East African Sorghum and Millet Conference. Soroti, Uganda.

Axtell, J.D. 1984. Agricultural Research in Africa. Paper presented to BIFAD on African Research Programs for 1985. December 1984.

Changes in Year 7 Objectives

See section on project objectives (Year 6 Objectives).

Breeding Sorghum Varieties and Hybrids with Improved Grain Quality, Drought Resistance, and *Striga* Resistance

Project PRF-7

Gebisa Ejeta

Purdue University

Host Country Collaborators

Dr. Abdellatif M. Nour, Sorghum Breeding, Agricultural Research Corporation (ARC), Sudan

Dr. Osman Ibrahim El Obeid, Sorghum Breeding, ARC, Sudan

Dr. AbdelJabar T. Babikher, Striga Research, ARC, Sudan

Dr. Mohamed El Hilu Omar, Sorghum Pathology, ARC, Sudan

Dr. Ahmad Abuelgassim, National Seed Administration, Sudan

Dr. M.S. Joshi, National Seed Administration, Sudan

Dr. Omar Fadil, National Seed Administration, Sudan

Mr. Mousa Adamou, Sorghum Breeding, INRAN/Niamey, Niger

Dr. John Clark, Sorghum Breeding, INRAN/Niamey, Niger

Dr. Derek Laycock, Striga Research, INRAN/Niamey, Niger

Other Researchers

Dr. Sam Mukuru, ICRISAT, Hyderabad, India

Dr. Vartan Guiragossian, ICRISAT/CIMMYT, Mexico

Dr. Brhane Gebrekidan ICRISAT/SAFGRAD, Kenya

Dr. John Scheuring, ICRISAT/USAID, Mali

Dr. John Axtell, Purdue University

Dr. Larry Butler, Purdue University

Dr. Herm Warren, Purdue University

Dr. Allen Kirleis, Purdue University

Dr. Darrell Rosenow, Texas A&M University

Dr. Edward Clark, Texas A&M University

Dr. Lynn Gourley, Mississippi State University

Dr. Lytton Musselman, Old Dominion University

Summary

Breeding sorghum varieties and hybrids for use in developing countries requires proper recognition of the major constraints limiting production, knowledge of germplasm, and appropriate physical environment for evaluation and testing. Efforts in INTSORMIL Project PRF-7 are attempts to meet these

requirements. Through regular dialogue and interaction with colleagues in Niger and Sudan, the sorghum breeding program at Purdue provides the necessary backup both in terms of germplasm and information. Contributions are made to sorghum breeding programs in Niger and Sudan at the time of the initial design of the experiments, as well as in assisting during evaluation of nurseries in the field. Progress has been made in identifying superior drought tolerant sources of sorghums that are currently being incorporated in breeding programs both in Sudan and Niger.

Efforts directed toward providing technical assistance in the development of a seed industry as well as to promote the use of hybrid sorghum seed in Sudan are making good progress. Interest in hybrid sorghum seed in Sudan is growing. The area under Hageen Dura-1 is increasing rapidly, and the demand for hybrid seed in Sudan far exceeds available seed supply. The acreage devoted to hybrid seed production is increasing. Local entrepreneurs interested in the seed business are producing seed, and U.S. companies are undertaking seed production as well as seed sales in Sudan. With experience in Sudan, the possible role of hybrid sorghum in Niger is being investigated.

Institutions

Collaborating Host Countries: Sudan - the Agricultural Research Corporation and the National Seed Administration; INRAN-Niamey, Niger; ICRISAT-Hyderabad, India; ICRISAT/CIMMYT-Mexico; ICRISAT/SAFGRAD-Kenya; ICRISAT/USAID-Mali.

U.S.: Purdue University, Texas A&M University, Mississippi State University, and Old Dominion University.

Linkages:

PRF-7 project activities are focused primarily in two African countries--Sudan and Niger. Results from our efforts will, therefore, be of immediate relevance and important to the two countries. Both countries are primary sites for two major ecogeographic zones and hopefully research results generated in the two major sites will have relevance and use in neighboring countries.

Sudan: The Agricultural Research Corporation provides the primary linkage for research under PRF-7 as it does for most INTSORMIL activities in Sudan. The main thrust of PRF-7 activities in Sudan is toward developing improved sorghum varieties and hybrids for use both in the rainfed and

irrigated sectors. To this end, primary collaboration is with the sorghum breeders, Dr. A.M. Nour and Dr. O. Ibrahim. Collaboration entails joint planning of specific studies, joint nursery evaluation, and germplasm exchange. This is achieved through visits both at the time of planning and at the time of nursery evaluation just before harvest. Such a mode of collaboration has been found to be mutually useful and provides a mechanism for a continual evaluation of germplasm developed in the United States to be evaluated for use in Sudan. Useful collaboration also exists with other ARC scientists, namely Dr. M. El Hilu Omar, sorghum pathologist, and Dr. A.J.T. Babikher, Striga specialist.

In addition to ARC, a less formal, but functional, linkage exists with the National Seed Administration (NSA) in Sudan. With staff at NSA, efforts are directed toward development of a seed industry in Sudan.

Niger: Mutually useful collaboration has quickly developed with INRAN. The main contacts in Niger are the sorghum breeders, M. Adamou, INRAN sorghum breeder, stationed at Maradi and Dr. J. Clark, Purdue Cereal Research Project team leader, located at Niamey. Our mode of collaboration in Niger is the same as that described for Sudan, i.e., joint participation in the planning of experiments and evaluation of genetic material in experimental fields. Support from INTSORMIL Project PRF-7 is provided to Niger in breeding sorghum for drought resistance and in development and evaluation of experimental sorghum hybrids. Another area of collaboration with INRAN is in training of graduate students. Negotiations have been made and plans are now underway for two Purdue graduate students, Mr. Issoufou Kapran, a Nigerian M.S. student and Mr. Dale Hess, a Ph.D. candidate, to undertake part of their thesis research in Niger.

Objectives, Research Procedures, and Production/Utilization Constraints

Sorghum/Millet Constraints

Moisture stress is perhaps the single most important constraint to sorghum production in both Niger and Sudan. Sorghum germplasm accessions with good levels of drought tolerance, while available in various programs around the world, had not been widely used in research programs in Niger and Sudan. Practical methodologies for screening sorghum germplasm for drought tolerance are also lacking. Breeding efforts to incorporate drought tolerance with higher than average yield potential are limited by lack of a

rapid field screening procedures as well as lack of knowledge of sources of sorghum germplasm possessing useful traits.

Striga, a parasitic weed of major sorghum growing tropical countries, is another major constraint to sorghum production. Sorghum germplasm with resistance to *Striga* are very few and the mechanisms that render resistance to *Striga* are unknown. Knowledge of inheritance of this trait is also scant.

One of the constraints limiting adoption and use of exotic early maturing, high yielding sorghum varieties in parts of West Africa is the susceptibility of exotic lines to grain mold causing fungi. Tall, late maturing, photoperiod sensitive local varieties completing their grain filling period after cessation of rains tend to escape grain deterioration problems in the field.

Year 6 Objectives

1. To develop sorghum varieties and hybrids with increased levels of drought resistance.

2. To work out a methodology for screening and incorporation of drought resistance with high yield potential.

3. To conduct basic studies towards understanding the mechanisms of drought resistance in sorghum.

4. To conduct basic studies to determine the inheritance as well as understand the probable mechanisms associated with *Striga* resistance in selected sorghum varieties.

5. To identify superior sources of grain-mold resistant sorghum lines.

6. In collaboration with colleagues in Sudan, to work towards the development of private seed industry to promote use of hybrid sorghums in Sudan.

7. To train graduate students.

Project Output

Research Findings for Immediate Use

1. Identification of Drought Tolerant Sorghum Lines: Using a field screening methodology in drought-stress prone locations in Sudan, a number of highly drought resistant sorghum lines have been identified. These selections were evaluated in Niger during the 1984 crop season and were found to maintain their drought tolerance in sandy soils tests in Maradi and

Kolo. The lines are now being used by sorghum breeders in both Niger and Sudan in intercrosses with local varieties.

2. Identification of New Sources of Grain Mold Resistant Sorghum Lines: From a pool of daylength insensitive sorghum lines developed and accumulated at Purdue University, several new sources of grain mold resistant sorghum lines were identified during the 1984 crop season. Some of these lines have a genetic background and yield potential that is readily utilizable in areas where grain deterioration is a constraint to production.

3. Progress is Being Made in Establishing a Functional Seed Program in Sudan: Though not a direct research effort, our continual involvement in hybrid seed production activity in Sudan is providing essential technical assistance. Collaboration has been with the National Seed Administration and the Agricultural Research Corporation. Areas under the hybrid sorghum Hageen Dura-1 in Sudan have increased significantly, as have efforts to produce hybrid seed in the country. The importance of good quality hybrid seed is better understood as a result of the concerted efforts of all those involved.

Research Progress Where Impact Will be Made in One to Three Years

1. Development of Sorghum Varieties and Hybrids for Niger and Sudan with Increased Levels of Drought Resistance: Germplasm lines are now available with superior early and postflowering drought resistance and good adaptation to drought prone areas of Niger and Sudan. Breeding efforts are underway to improve the yield potentials of these lines through intercrossing of selected exotic and local sorghum varieties. The approach that appears to have the most immediate potential is the use of these germplasm sources as R-line parents in hybrid combinations. Intercrossing will be done in the U.S. for evaluation under drought conditions in both Niger and Sudan. Hybrid combinations developed from lines that already have been evaluated for adaptation and drought tolerance are expected to have a better chance for immediate utility. The impact of such a hybrid will be particularly significant in Sudan where use of commercial hybrid sorghum is already under development. In Niger the focus is toward evaluating the potential as well as feasibility of commercial sorghum hybrids in the next three years.

2. Understanding the Inheritance and Mechanism of *Striga* Resistance in Sorghum: An interdisciplinary project is currently underway on basic

studies on the genetic as well as the biochemical and physiological basis of Striga resistance in sorghum. A significant portion of this project is undertaken by Mr. D. Hess, a Ph.D. graduate student. Sorghum varieties resistant to Striga have been identified in a collaborative field evaluation project in Sudan. These lines as well as susceptible varieties from Sudan are being used in the project. Basic biochemical and root anatomy investigations are done at Purdue University while field evaluation to generate genetic information will be pursued by D. Hess in Niger, beginning June 1986, where he will be serving as a research associate in the Purdue Niger Cereal Research Project. It is expected that at the end of this study significant information will be generated that will be very valuable to the very small community of Striga researchers.

Networking Activities

Workshops and Reviews

- Participated in the INTSORMIL Sorghum Disease Workshop held in June/July 1984, at Texas A&M University.
- Organized and Hosted the External Evaluation Panel On-Site Review held in Sudan in October/November 1984.
- In June 1985 negotiated with INRAN to obtain approval for and did the legwork for the INTSORMIL/Niger Workshop held in October 1985.
- Germplasm and Information Exchange: An effective mechanism has been developed for germplasm exchange with cooperators both in Sudan and Niger. The type and extent of germplasm introductions to both Sudan and Niger from our project is based upon either specific request from the collaborators or based on preliminary evaluation of small sets of nurseries introduced the previous season. This approach has been found to be satisfactory and workable. A number of early generation as well as advanced breeding sorghum lines were introduced to both Sudan and Niger. Such germplasm constitutes a significant part of the core breeding program in both INRAN and ARC. Likewise, useful local sorghums from Niger and Sudan have also been introduced for initial intercrosses to be made in the winter nursery in Colombia.

A significant networking activity involving information exchange is developing through the efforts of this project and its collaborators. Using information accumulated on germplasm and environmental data from INTSORMIL

collaborative effort in Sudan, varieties and hybrids that showed potential in Sudan are suggested for testing in similar environments in Niger. Research methodologies (on drought tolerance for example), as well as results, therefore, are also shared across countries and zones.

Research Investigators Exchange: The following two individuals were brought onto the Purdue campus at PRF-7 expense to share their experiences on Striga research in their laboratories.

Dr. L. Musselman, Old Dominion University, April 1985. "Recent Research on Witchweeds of Africa and Arabia."

Dr. N. Shah, Birkbeck College, London, England. July 1985. "Biochemical Aspects to Striga Research."

Travel

International

- September 27 - October 11, 1984. Gebisa Ejeta. Niamey, Niger and Bamako, Mali. Evaluation of INTSORMIL sorghum nurseries and interact with staff at Purdue/INRAN and ICRISAT/Mali programs.
- October 22 - November 12, 1984. Gebisa Ejeta. Host INTSORMIL External Review Panel in Sudan. Provide technical assistance with the Sudan Sorghum Hybrid Seed Production Program. Evaluate INTSORMIL/Sudan cooperative sorghum nurseries in Wad Medani and El Obeid, Sudan.
- June 17 - July 3, 1985. Gebisa Ejeta. Niamey, Niger. Plan 1985 INTSORMIL research in Niger and discuss the proposed INTSORMIL West Africa Workshop in September-October 1985.

Domestic

- June 24 - July 1, 1984. Gebisa Ejeta. College Station, Texas. To attend the INTSORMIL Sorghum Disease Workshop in south Texas, organized for staff and students from INTSORMIL institutions.
- July 15-19, 1984. Gebisa Ejeta. College Station, Texas. Attend International Sorghum Entomology Conference.
- August 23-24, 1984. Gebisa Ejeta. Washington, D.C. USAID panel discussion group on cost-benefit analyses of investments in research by CRSP.
- September 9-12, 1984. Gebisa Ejeta. College Station, Texas. INTSORMIL Triennial Review (Sorghum and Millet Breeding).

- November 15-16, 1984. Gebisa Ejeta. DeKalb, Illinois. Discussion with DeKalb/Pfizer Genetics staff regarding Purdue/DeKalb Joint Venture Proposal.
- December 17-18, 1984. Gebisa Ejeta. Washington, D.C. Further discussion with USAID and BIFAD staff regarding the Purdue/DeKalb Joint Venture Proposal to develop private seed industry in the Sudan.
- April 26, 1985. Gebisa Ejeta. Johnston, Iowa. Met with Pioneer Overseas Corporation officials regarding Sudan Hybrid Sorghum Seed Venture.
- June 12, 1985. Gebisa Ejeta. Washington, D.C. Discuss "Sorghum Seed Industry Development for Sudan" proposal with USAID Sudan Mission Director, R. Brown.

Publications and Presentations

Publications

Ejeta, G., and J. Axtell. 1985. Mutant gene in sorghum causing leaf "reddening" and increased protein concentration in the grain. J. Heredity 76:301-302.

Ejeta, G. 1984. Breeding sorghum for insect resistance in Sudan. Proc., Int. Sorghum Entomology Conference. July 15-19, 1984. (In press)

Hassen, M.M., E.T. Mertz, A.W. Kirleis, G. Ejeta, J.D. Axtell and E. Villegas. 1985. Tryptophan levels in normal and high lysine sorghums. Cereal Chemistry. (In press)

Ejeta, G., J.D. Axtell, and W.E. Nyquist. 1985. Modified endosperm, high lysine sorghum lines from diverse sorghum populations. (Submitted to Crop Science) A.E.S. Journal No. 10432.

Omer, M.H., R.A. Frederiksen, and G. Ejeta. 1985. A method for inoculating sorghum with Tolyposporium ehrenbergii and other observations on long smut in Sudan. (Submitted to Plant Disease Reporter)

Ejeta, G., and J.D. Axtell. 1985. Vitreous endosperm high lysine sorghum mutants in sorghum. (In review to be submitted to Crop Science.)

Ejeta, G., and J.D. Axtell. 1985. Evaluation of high lysine and normal sorghum varieties for protein quality and carbohydrate composition at three stages of grain development. (In review to be submitted to J. Agric. and Food Chem.)

Presentations

Ejeta, G. 1984. International efforts in sorghum and millet improvement in Africa. Int. Agric. Club, Purdue University.

Ejeta, G., and D.W. Thomas. 1984. Chronology of a new sorghum hybrid for the Sudan--A high payoff, long-term research investment. Paper prepared for USAID use in a Senate Foreign Relations Committee on Agricultural Development Programs in Africa.

Ejeta, G. 1984. Establishing seed industry in a developing country. Int. Agric. Seminar, Purdue University.

Ejeta, G. 1985. "INTSORMIL and its role in developing countries." Paper presented at the Second NCRP Workshop. Huntsville, Alabama. June 11-13, 1985.

Adaptation of Sorghum and Pearl Millet to Highly
Acid Tropical Soils
Project MSU-11
Lynn M. Gourley (July 1984 -- January 1985)
Catalino I. Flores (January 1985 - Present)
Mississippi State University

Other Researchers

Dr. Hernan Gaviria Echeverri, Breeder and National Sorghum Research Coordinator, ICA-Nataima, Colombia

Mr. Cesar Ruiz, Breeder, ICA-La Libertad, Colombia

Dr. Eric Owen, Soil Scientist, ICA-La Libertad, Colombia

Mr. Jose Ever Vargas, Breeder, ICA-Palmira, Colombia

Mr. Hector Mena T., Sorghum Breeder and Director of Cereal Section, CENIAP-FONAIAP, Maracay, Venezuela

Mr. Pedro R. Solorzano P., Soil Scientist and Vice President for Agricultural Development, Protinal C.A., Valencia, Venezuela

Dr. Mauricio Riccelli Mattei, Professor of Genetics, Central University of Venezuela and Head of Breeding Program, Protinal C.A. Venezuela

Dr. Oscar de Cordova, Breeder, Cargill Seed Co., Maracay, Venezuela

Mr. Renato Borgonovi, Breeder and National Sorghum Coordinator, EMBRAPA-CNPMS, Sete Lagoas, Brazil

Dr. Robert E. Schaffert, Breeder, IICA-EMBRAPA World Bank Project, Sete Lagoas, Brazil

Dr. Gilson Pitta, Soil Scientist, EMBRAPA-CNPMS, Sete Lagoas, Brazil

Dr. Gabriel Maciel, Breeder, UEP, Sierra Talhada, Brazil

Dr. Dale Bandy, NCS University Mission/INIPA and Tropsoils, Lima, Peru

Dr. Luis Alberto Narro Leon, Agronomist, INIPA-Lima, Peru

Mr. Federico Scheuch, Breeder and Co-Leader National Maize Program, INIPA-Lima, Peru

Mr. Oscar Agreda Turriate, Agronomist, INIPA-Iquitos, Peru

Mr. Francisco Canepa Acosta, Director General INIAP-Quito, Ecuador

Mr. Andres Brando, Leader of Sorghum Research, INIAP-Boliche, Ecuador

Dr. Gaspar Silvera, Subdirector, IDIAP-Panama City, Panama

Mr. Benjamin Name, Soil Scientist and Leader Acid Soils Program, IDIAP-Santiago de Veruguas, Panama

Dr. Bhola Nath Verma, Breeder, SIDA, Zambia

Dr. Leland R. House, ICRISAT/SADCC Project Leader, Zimbabwe

Dr. Lynn M. Gourley, Plant Breeder, Coordinator of INTSORMIL for South America and MSU-4 PI, Mississippi State University

Dr. Ralph Clark, Plant Nutritionist, NU-14 PI, University of Nebraska

Mr. Dave Andrews, Plant Breeder, NU-15 PI, University of Nebraska

Mr. W.M. Stegmeier, Plant Breeder, KSU-1 PI, Kansas State University

Dr. John D. Axtell, Plant Breeder, PRF-3A PI, Purdue University

Dr. Douglas J. Lathwell, TROPSOILS, Cornell University

Summary

Research under this project officially started November 1, 1982, after the Directors General of CIAT and ICRISAT and the Director of INTSORMIL signed a Memorandum of Intention on February 11, 1981. In January of 1985, Dr. C.I. Flores was appointed principal investigator of MSU-11, replacing Dr. L. Gourley who had initiated the project and served as principal investigator for more than two years.

The workshop "Evaulating Sorghum for Tolerance to Al-Toxic Tropical Soils in Latin America" laid the foundation for a regional effort to help solve a common problem. The enthusiasm and cooperation of National Program administrators and scientists in South America has helped INTSORMIL initiate a collaborative research network. The use of the field screening methodology developed for sorghum in this project has resulted in a large quantity of aluminum-tolerant germplasm being fed into the research programs of several countries where the lack of germplasm was one of the primary problems.

The research findings of MSU-11 have demonstrated that there is a great deal of genetic diversity for aluminum tolerance in sorghum and more recently in pearl millet. From more than 2,500 lines in the sorghum world collection, originally collected from acid soils in Africa, 400 ecotypes have been identified as being highly tolerant to acid soils of the tropics with toxic levels of soluble aluminum. Most of these lines could be used only as breeding material, but about 25 lines have adequate yield potential for direct use by farmers. The National Program of Colombia, ICA, is extensively testing several of these lines for release as the first aluminum-tolerant variety for the Llanos of Colombia.

The acid soils of the tropics present a complex problem for breeders and grain producers alike. The interrelated constraints are complex

genetically and require low-input strategies for economic returns by producers. Some of the genotypes selected have demonstrated that food and feed grain sorghums can be grown in highly acid soils with lower inputs of lime and fertilizer than commercially available cultivars. The exact impact that acid soil tolerant sorghum and pearl millet germplasm will have on tropical agriculture has yet to be determined, but present indications are that the future should be bright for food grain production in acid soil areas of South America and Africa.

Institutions

Collaborating Host Countries: ICA-Colombia, CENIAP-FONAIAP-Venezuela, EMBRAPA-Brazil, INIPA-Peru, IDIAP-Panama, INIAP-Ecuador, ICRISAT/SADCC-Zimbabwe; and SIDA-Zambia

U.S.: Mississippi State University MSU-4, University of Nebraska NU-14 NU-15, Kansas State University KSU-1, Purdue University PRF-3A, and TROPSOILS

Linkages:

MSU-11 is informally linked with almost every country in South America where CIAT conducts research. We have established cooperative research linkages with the national research programs of ICA/Colombia, EMBRAPA/Brazil, CENIAP-FONAIAP/Venezuela, INIPA/Peru, and IDIAP/Panama. These countries are in the major acid soil areas and are conducting research to solve soil acidity problems. This collaborative linkage network unifies INTSORMIL researchers and host country scientists to solve a common problem in the region through exchange of germplasm, research result dissemination, technical consultation, training, and workshops. The linkage with ICA, though informal, is very strong. ICA has provided land, facilities, personnel and full administrative support at the national level and at the La Libertad and Carimagua stations in the Llanos. The only request they have made from INTSORMIL is for Al-tolerant sorghum germplasm, technical support and guidance, and future degree training of their young sorghum staff. The linkage with EMBRAPA is strong and formal. The main request for support from INTSORMIL that this highly trained institution has made is for germplasm, technical cooperation and consultation. The linkages with CENIAP-FONAIAP, INIPA and IDIAP are in the nature of germplasm exchange, regional trials and sorghum research information. Linkages with the

ICRISAT/SADCC and SIDA-Zambia, are mainly through germplasm exchange, testing of Al-tolerant sorghum for tolerance to Mn toxicity and technical consultation. Cooperation with TROPSOILS and CIAT soil scientists extends our limited resources and experiences in major acid soil areas of South America.

Ecogeographic Zones Most Benefited by Research

The impact of our research results will undoubtedly be in the major acid soil areas of South America and Central and Southern Africa. More than 50 % of the total land mass of Africa has soil acidity problems. Development of sorghum and millet cultivars with high tolerance to Al and Mn toxicities will at least solve a major constraint of sorghum and millet production in the acid soil regions of the world.

Objectives, Research Procedures, and Production/Utilization Constraints

Sorghum/Millet Constraints

The major constraint in the region is acid soils. Over 2 billion hectares of acid soils are distributed throughout the tropics of the world. Tropical South America has over 860 million hectares of these problem soils with their various chemical constraints to agricultural production. Since 1974 the area planted to sorghum in tropical South America has increased by 20.4 % per annum. Average yield of grain sorghum has decreased due to more marginal acid soil lands being brought into production. The lack of available sorghum and millet germplasm, with reasonable tolerance to Al toxicity and low levels of phosphorus, has prevented national research programs from exploiting these acid soil areas.

Year 6 Objectives

1. Establish a regional program for the breeding and adaptation of sorghum and pearl millet to low pH, Al-toxic tropical soils.

2. Screen and evaluate a large portion of the World Collection of sorghum and pearl millet for tolerance to aluminum and manganese toxicities and phosphorus stress.

3. Incorporate sources of tolerance to aluminum and manganese toxicities into elite U.S. and tropical sorghum germplasm.

4. Adapt low-input technology strategies for the evaluation of Al-tolerant lines grown on tropical savanna soils.

5. Distribute sorghum and pearl millet germplasm developed in this and other INTSORMIL projects and by ICRISAT to National Programs in Latin America and Africa.

6. Train and assist Latin American regional and Zambian scientists in the use of effective breeding and screening methods for the adaptation of sorghum and pearl millet to acid tropical soils.

Changes in Objectives from Previous Year

Pearl Millet was added to the screening and evaluation nurseries at Quilichao. Preliminary observations show pearl millet to have potential for the acid soil areas in Latin America. We estimate a breakdown in commitment of 80 % sorghum and 20 % pearl millet.

Evaluation of sorghum and pearl millet germplasm to soils with toxic levels of manganese and low phosphorus was added to the project objectives.

Research Procedures

1. A reliable Al tolerance field screening technique has been developed at CIAT-Quilichao, Colombia. Using an Al-saturation of 60 to 65 %, susceptible genotypes die while the tolerant genotypes grow normally and produce acceptable yields of grain. Based on the geographical distribution of acid soils in Africa, approximately 2,000 lines were systematically selected, increased and screened for Al-tolerance in the field. Plant response was visually rated using a 1 to 4 scale (1 = tolerant, 4 = susceptible). The best Al-tolerant cultivars were then tested for grain production in replicated trials. Leaf mineral contents were assayed by Dr. R.B. Clark (NU-14).

2. After early testing, Al-tolerant cultivars are crossed to elite U.S. grain types for recombination and genetic studies. The pedigree breeding approach is being used with different Al-tolerant sources. After determination of restorer reaction, the best Al-tolerant sources were incorporated into a B or R-line random-mating population containing ms_1 gene for genetic male sterility. These populations are cycled on soils of 60 to 65 % Al saturation.

3. The most Al-tolerant cultivars are being evaluated in regional yield trials in the Colombian and Venezuelan Llanos, Peruvian Amazonian lowlands and Brazilian Cerrados. Minimum inputs required for economic returns are being conducted in trials in cooperation with ICA.

4. Advanced breeding lines, random-mating populations, world collection lines and new U.S., INTSORMIL and ICRISAT releases are being made available to interested Latin breeders.

5. Regional scientists are being instructed on the use of effective breeding and screening methods for adaptation of sorghum and millet to acid soils by means of workshops, staff visits, training at CIAT and graduate assistantships in U.S. universities.

Problems Regarding Achievement of Objectives

Movement of germplasm to different national programs in Latin America has been very slow because of strict quarantine and importation requirements. In spite of full cooperation of our collaborators, germplasm often does not arrive in time for the desired planting season.

Another important problem is the lack of trained manpower and poor research infrastructure to do sorghum research in some countries. This is one reason why personnel training should be emphasized in our program.

Project Output

Research Findings Relevant or Available For Immediate Use

A reliable Al tolerance field screening technique has been developed at Quilichao, Colombia. More than 400 cultivars with Al tolerance have been identified. Some have direct use potential with good grain yield of 5 tons/ha at 60 to 65 % Al saturation while others could be used only as breeding materials.

Research Progress To Be of Benefit in One to Three Years

One national program (ICA) is extensively testing several of INTSORMIL's newly identified Al-tolerant cultivars for release in one or two years as the first Al-tolerant sorghum variety for the Llanos of Colombia.

Grain and forage pearl millets have been shown to have good tolerance to acid soils. Because pearl millet is also tolerant to drought and temperature stresses it may be one of the future crops of the acid soil savannas of tropical South America.

Networking Activities

Workshops

- Dr. L.M. Gourley attended and presented a paper at the Sorghum Farming systems Workshop at CIMMYT in September, 1984.

- Dr. L.M. Gourley coordinated the 1984 Workshop "Evaluating Sorghum for Tolerance to Al-Toxic Tropical Soils in Latin America" cosponsored by INTSORMIL, ICRISAT and CIAT. Presented a paper and coauthored a second paper at the workshop.
- Research Investigator Exchanges: Sorghum researchers from Colombia, Brazil, and Venezuela have visited our test sites in Colombia and we have observed their material in the field.
- Germplasm Exchange: Researchers who received Al-tolerant and other sorghum germplasm:

  Colombia: C. Ruiz, ICA; J.E. Vargas, ICA; F. Patarroyo

  Venezuela: M.R. Mattei, Protinal; H. Mena T., CENIAP-FONAIAP; O. de Cordova, Cargill

  Brazil: R. Borgonovi, EMBRAPA; C. Bastos, IAC

  Peru: F. Scheuch, INIPA; D. Bandy, NCS/University Mission INIPA; A. Grobman, Pentagenetics

  Panama: G. Silvera, IDIAP; B. Name, IDIAP; R. Gonzalez, IDIAP

  Honduras: J. Diaz, Recursos Naturales

  Mexico: J.L. Amaya, DeKalb, V. Guiragossian, ICRISAT

  Zambia: B.N. Verma, SIDA, Sorghum Breeder, S. Hutgren, SIDA, Project Coordinator

  Zimbabwe: Dr. L.R. House, ICRISAT/SADCC

  U.S.A.: D. Andrews, University of Nebraska; Dr. A.B. Maunder, DeKalb-Pfizer

New sorghum and millet germplasm has been acquired from Venezuela, Brazil, Puerto Rico, Philippines, ICRISAT/Mexico, the University of Nebraska, Kansas State University, Iowa State University, Oklahoma State University, the University of Georgia, and Texas A&M University.

Projects MSU-4 and MSU-11 have supported travel of Colombian scientists and have purchased a small thresher and two seed moisture testers for ICA.

Travel

- July 1 - November 8, 1984. L. Gourley. To Colombia on assignment.
- September, 1984. L. Gourley. To Mexico for systems workshop.
- October, 1984. L. Gourley. To Villavicencio and Carimagua, Colombia, to plant research plots.
- October, 1984. C.I. Flores. To Colombia for an interview.
- January, 1985. C.I. Flores. To Colombia on assignment.

- February, 1985. C.I. Flores. To Lubbock, Texas, to attend a SICNA meeting.
- March, 1985. C.I. Flores. To Villavicencio, Bogota, and Carimagua, Colombia, to plant research plots and visit AID representative.
- April, 1985. C.I. Flores. To Honduras to attend a PCCMCA meeting.
- June, 1985. C.I. Flores. To Venezuela to evaluate sorghum prospects and problems.

Publications and Presentations

Publications

Gourley, L.M. 1984. Finding and utilizing exotic Al-tolerant sorghum germplasm. Workshop "Evaluating Sorghum for Tolerance to Al-Toxic Tropical Soils in Latin America," CIAT.

Gourley, L.M. 1984. A comparative perspective on sorghum and millet-based farming systems--Andean Region. In Proc. Workshop on Sorghum Farming Systems in Latin America. CIMMYT, El Batan, Mexico.

Clark, R.B., and L.M. Gourley. 1984. Evaluation of mineral elements of sorghum grown in acid tropical soil. Workshop "Evaluating Sorghum for Tolerance to Al-Toxic Tropical Soils in Latin America", CIAT.

Rogers, S.A., and L.M. Gourley. 1984. Screening Sorghum for aluminum tolerance in Colombian soil. ASA Southern Branch. Abstract.

Presentations

Finding and utilizing exotic Al-tolerant sorghum germplasm. CIAT workshop.

Adapting sorghum to Al-toxic tropical soils. Seminar CIAT.

A comparative perspective on sorghum- and millet-based farming systems Andean Region. CIMMYT workshop.

Changes in Year 7 from Year 6

Three major changes in research plans have developed in Project MSU-11.

Dr. C.I. Flores was appointed principal investigator of Project MSU-11 in January, 1985, replacing Dr. L. Gourley.

Involvement with pearl millet will be increased to about 20 % in MSU-11. Pearl millet World Collection lines and other germplasm from INTSORMIL projects will be screened for Al tolerance in Colombia.

Al-tolerant sorghum and pearl millet lines will be screened for Mn tolerance in Zambia.

Sorghum and Millet Improvement in Kenya

Project TAM-32

John A. Mann

Texas A&M University

Project Personnel

Principal Agronomist, OIC, W.A.R.S., Kakamega Station, Sorghum Agronomist, Kenya

Newton Ochanda, Research Officer, OIC, Alupe Station, Kenya

F. Lawrence M'Ragwa, Research Officer, Katumani Station, Millet Breeder

John A. Mann, Texas A&M University, Sorghum Breeder

Other Researchers

Ben Kenyenji, Research Officer, Katuman, Sorghum Breeder, Kenya

Machari Gethi, Research Officer, Coast, Cereal Pathologist, Kenya

Mr. P.K. Kusewa, Director, N.D.F.R.S., Katumani, Kenya

Aziz Abubakr, OIC C.A.R.S., Mombasa, Kenya

Dr. Brhane Gebrekidan, SAFGRAD/ICRISAT, Sorghum Breeder, Kenya

Dr. Fred Miller, Professor, Texas A&M University

Institutions

Collaborating Host Country: Kenya - Ministry of Agriculture and Livestock Development, Scientific Research Division--National Dryland Farming Research Station, Katumani (Machakos), Western Agricultural Research Station, Kakamega and Alupe; OAU-SAFGRAD, and ICRISAT.

Linkages:

- The Memorandum of Understanding between INTSORMIL and the Tanzanian Agricultural Research Organization (TARO) is still in force, or at least has not been canceled by INTSORMIL. Although there was no activity of any kind during Year 6 with TARO or its scientists, the climate in Tanzania is changing so that there is reason to believe that activities might resume in the near future.
- Kenya: There is now a consensus within the Ministry of Agriculture and the USAID Mission that INTSORMIL has a significant contribution to make in Kenya. No formal ties have been established with the Ministry, but not because there is a lack of will to do so. At this point USAID is asking INTSORMIL not to

establish formal ties, but rather to keep the linkages informal, at least until the startup of their upcoming agricultural research project. Informal ties with most of the country's sorghum and millet workers were established during Year 6, and this has resulted in very good cooperation and the beginnings of collaboration between Ministry personnel and INTSORMIL. Three regional experiment stations and the director of research in the Ministry are now directly involved in cooperative work in the country. As the program progresses, true collaborative efforts will evolve.

Ecogeographic Zones Most Benefited by Research

The work of TAM-32 is directed towards one ecogeographic zone, that being the Sudan/East African area. Some of the germplasm will likely be useful in Southern Africa, and in fact some has been moved there from Tanzania via the program of Dr. Lee House in Zimbabwe.

Objectives, Research Procedures, and Production/Utilization Constraints

Sorghum/Millet Constraints

Sorghum and millet production in Kenya in particular and East Africa in general is constrained by two primary factors, both of them part real and part psychological. From the farmer's perspective the problem of birds and the associated quality problems of "bird resistant" sorghums loom large. While country-wide crop losses due to birds are estimated never to exceed 5 % in any of these countries, these losses usually translate into a total loss on 5 % of the hectarage, or perhaps a 50 % loss on 10 % of the hectarage. The net effect of this is what might be considered a minor production loss is instead considered by the farmer to be an intolerable risk. A total crop failure means one thing in a cash economy, quite another in a subsistence economy.

A shortage of labor due to children being in school is most often cited as a primary reason for not growing sorghum; however, in those areas where sorghums are the preferred crop, the necessary labor is always available. It would thus seem that birds are often used as an excuse not to grow these crops, rather than being a production constraint which cannot be overcome.

The associated problem of high tannin sorghums is most evident where people are growing "improved" sorghums such as Serena. While local types

often have a testa, they have a reputation of becoming "sweeter" as they mature, whereas Serena does not. Because the technology to cope with the high tannin types has not been transmitted along with the improved cultivars, the presence of the testa in these improved types does present a serious problem.

The second problem, and perhaps the root cause of all the other problems in research, production and marketing, is that these crops are considered by many East Africans to be "inferior" to maize; not that they taste bad or don't cook properly, but by using them one takes a step down the ladder of civilization. This attitude is reflected in the lack of enthusiasm for research, the unavailability of labor for bird-scaring, the lack of market recognition, and many other constraints to production. This problem can only be solved by the political system, and that is what is happening in Tanzania and Kenya now. The drought of 1982-1984 further convinced many politicians that more drought tolerant crops are essential for those areas susceptible to low and erratic rainfall. This political recognition is essential, but at the same time makes the need for research more urgent, so that when people respond to the call to plant sorghum or pearl millet, they have both the appropriate cultivars and processing technology to make the crop a success in their households and farms.

Year 6 Objectives

There were four primary objectives for Year 6, and these are listed below:

Germplasm evaluation: A total of 1,000 lines were sent to Kenya for evaluation in the long rains. Because of poor communication between here and Kenya, the material was not planted as planned. On-site arrangements have been made for its planting in October 1985.

Germplasm enhancement: Materials previously identified as superior in Tanzania were planted in five locations in Texas for additional selection and crossing.

Scientific exchange: Arrangements to bring a Kenyan scientist to Texas A&M University for two months were to be initiated, enabling that scientist to work in the Texas (and other INTSORMIL) programs during the cropping season.

Project design: The USAID Mission in Nairobi was planning a large, long-term agricultural research project during the first month of the year.

Perhaps the most important goal of the Mission for INTSORMIL was to include sorghum and millet in the project, and help ensure that INTSORMIL institutions are a part of the project when it finally begins.

These goals are different from those of the last half of Year 5, basically because of the change in posting from Tanzania to College Station. The objectives of Year 5 dealt with the same kind of issues in terms of germplasm, manpower training and institutional development, but the specific objectives reflected in-country posting.

Research Procedures

The breeding program has taken two basic thrusts; the development of lines and hybrids in a classical pedigree system; the second, work to establish genetic male sterile lines for use in developing synthetic cultivars. In both sides of the program an effort is being made to maintain great diversity, using material from the Sorghum Conversion program.

An effort is made to simulate to some degree the typical plant architecture of African "local" sorghum cultivars. The plant type being sought has somewhat reduced height, more panicle branches and somewhat tighter panicles than the locals. Increased yield potential is being sought through increased panicle length, with panicles remaining relatively loose. The main improvement emphasis has been on food quality characteristics, i.e., tannins, pericarp color, plant color, endosperm type, etc. Most materials have been selected for low tannins, tan plants, corneous endosperm and white pericarp. An increased emphasis, however, has been placed on high tannin types, as about 70 % of the sorghums in Kenya currently have a testa. Even though low tannin types may be the ultimate objective, work will intensify on these high tannin types.

The production of elite lines which contain the genetic sterile gene Ms3 is at the second backcross stage. F_2 lines of these lines have been intercrossed (via the sterile segregates) and these lines will be used to formulate trial hybrids and synthetics which will be tested in the coming year for inherent heterosis.

One project not included on the original list of objectives was the development of an "adaptation index" for sorghum and millet around the world. This effort derived from the February INTSORMIL meetings and was intended to supply to all INTSORMIL personnel a guide to the climate in each country where they worked, and the types of sorghum and pearl millet which

were adapted there. In addition, INTSORMIL scientists were asked to increase seed for a 12-20 entry international adaptation trial to be planted in up to 200 locations worldwide for adaptation indexing.

The only serious problem in the achievement of Year 6 goals was the lack of movement within USAID/Kenya in getting the agricultural technology project off the ground. Once that project starts, it is anticipated that it will move quickly into Kenya, and get back to the original mode for sorghum/millet development in East Africa.

Project Output

Research Findings Available for Immediate Use

The adaptation index forms, maps and nursery will all be ready for use by INTSORMIL scientists this year. The completed forms will be returned to Texas A&M University, reproduced and sent out to all institutions for descriptive purposes. It is hoped that these forms plus the maps, will give scientists a good idea of what is happening with the climate year round, and how sorghum and millet are produced and used within the areas concerned. Data for the International Adaptation Nursery will be collected and distributed to add additional detail to local production conditions.

Research Progress To Be of Benefit Within Three Years

A considerable amount of TAM-32 germplasm is at the stage where it will be ready for release within the next three years. Many of these lines were tested in Tanzania in Year 5 and will be tested twice in Year 7, both in Texas and Kenya. The initial synthetic lines will be available for testing in the 1986 short rains, and should be in farmers' trials two seasons later. In addition to the synthetic lines, a number of pedigreed lines selected in the last two years will be ready for farmer testing within the next three seasons. Some of these have most of the attributes we think necessary for Kenyan small farmers, and need only to be tested for yield stability and food quality.

If the work done under TAM-32 is successful in securing a place for INTSORMIL in the upcoming agricultural technology project in Kenya, then that will be a significant contribution to INTSORMIL's ability to operate in East Africa. This is important because eastern Africa will surely be a major focus for USAID involvement in sorghum/millet the next 10 years, and thus an area where INTSORMIL can make significant contributions. It is the

author's opinion that much of INTSORMIL's credibility will be based in the future on its contributions to sub-Saharan Africa, and the eastern half of that area will certainly be important to USAID and other donor organizations.

Networking Activities

- I was able to attend both the Third and Fourth Annual East African Sorghum and Millet Regional Workshops in Morogoro and Soroti, respectively. At the Morogoro meeting I presented a paper to the delegates on the role of INTSORMIL in East Africa and, as a consequence, was able to initiate a series of contacts with scientists from all over the region. There was and continues to be a strong desire within the East African sorghum community to work with the U.S. scientists.
- During a month spent in Kenya (January - February) contacts were made with a number of Kenyan sorghum and millet scientists in eastern and coast provinces. The foundations for future cooperation and collaboration were well laid during that period. These contacts include the director of research in the Ministry, station directors at the coast and Katumani, and a number of scientists at those and other locations. I have been in communication with several of these scientists and administrators since that time, and am currently working with them in germplasm development and publication procurement. They have been providing assistance in the effort to begin screening INTSORMIL materials in their worksites.
- Germplasm from TAM-32 has been sent to Ethiopia, Somalia, and Kenya during Year 6. Over 8,000 rows of materials were left in Tanzania, along with detailed instructions on their harvest, advance and use.
- A considerable amount of project-purchased supplies were left in Tanzania in the first month of Year 6. These included both office and field supplies. A small amount of supplies were given to Kenyan scientists in Year 7 which were purchased in Year 6, including staplers and staples.

Travel

- January 11-February 17, 1985. Kenya. (Travel expenses paid by WINROCK, Int.) To participate in technical design team for dryland component of USAID/Kenya Agriculture Technology Project.
- November 28-December 3, 1984. Las Vegas, Nevada. To participate in ASA annual meetings.

Presentations

The Role of INTSORMIL in Sorghum and Millet Improvement in Eastern Africa. Presented to the Third Annual SAFGRAD/IDRC East African Regional Sorghum and Millet Workshop, Morogoro, Tanzania.

Changes in Year 7 Objectives

The basic plans for Year 7 Will remain as indicated for Year 6, with the inclusion of the Adaptation Indexing Project as a more major part of the program. Increased emphasis will also be given to research work in Kenya, as all the components for that collaborative work are now in place. If the Agriculture Technology Project (USAID/K) becomes a reality within the year, then obviously priorities will shift to reflect those new circumstances.

Pearl Millet Breeding

Project KSU-1

W.D. Stegmeier, Babrak Khaleeq and T.L. Harvey

Kansas State University

Other Researchers

R. L. Vanderlip, Agronomist, Agronomy Dept., KSU

Tareke Berhe, Agronomist/Breeder, KSU El Obeid, Sudan

R. P. Jain, Breeder, ICRISAT, Wad Medani and El Obeid, Sudan

El Hag Abulgassim, Breeder, WSARP, El Obeid

J. Witcombe and Staff, Breeders, ICRISAT, Patancheru and Hissar, India

D. Carter, Agronomist, Sebele Research Station, Botswana

S.W. Gupta, Breeder, ICRISAT, Bulawayo, Zimbabwe

L. R. House, Breeder, ICRISAT, Bulawayo, Zimbabwe

Summary

Cooperating individuals and institutions included Berhe, KSU 7-1, Sudan; D. Carter, KSU 7, Botswana; J. Witcomb and staff, ICRISAT, India; Sudan and Zimbabwe; D. Andrews, University of Nebraska, and L. Gourley, Mississippi State University. The ecogeographic zones that would benefit most from KSU-1 research are the Indian Subcontinent and East Africa.

Several constraints to millet productivity occur throughout the millet growing areas of the world and include conditions of poor soil fertility, heat and drought that affect stand establishment, plant development, and grain yield. Diseases, insects, birds, and Striga are problems of varying degree that must be addressed to improve millet production.

Results of research to date are as follows:

Two pairs of pearl millet cytogenic male-sterile and maintainer lines were approved for a joint release by KSU/INTSORMIL and ICRISAT. The 1984 Coordinators Review of the All India Millet Improvement Workshop reported that these two lines are being widely used in India both to make F_1 hybrids and in breeding new male-sterile lines. Previously, the AICMIP Coordinator had recommended, based on 1983 performance of F_1 hybrids made with these lines, that all Indian millet breeders incorporate these materials into their breeding programs.

Additional progress has been made in improving stalk lodging resistance with the identification of 12 F_4 and F_5 lines that have reduced levels of internode pith disintegration under drought stress conditions. A total of

90 new accessions introduced into the program are expected to contribute increased grain yield and quality, disease resistance and genetic diversity. Two new populations were started in 1984: a bristled population containing several height genes, and a dwarf population with excellent grain yield potential. Screening, evaluation, and inheritance studies of inbred lines possessing increased seedling length was started and early results are identifying several lines with long mesocotyls as having improved stand establishment capabilities. A miniature vacuum cleaner is being adapted to pollen collection to increase efficiency and reduce labor in the advancement of populations and crossing of parental lines.

Institutions

Dr. Tareke Berhe, KSU-1-1, El Obeid, Sudan cooperatively with Drs. El Hag Abulgassim, WSARP, and R.P., Jain, ICRISAT, evaluate materials from this project and supply seed of Sudanese millets to be introduced into the KSU-1 program.

ICRISAT. Drs. J.R. Witcombe and staff, India; R.P. Jain, Sudan, and S.C. Gupta and L.R. House, Zimbabwe provide improved germplasm to KSU-1 and evaluate, select, and utilize products of the KSU-1 program at their respective locations.

KSU-7. Dr. Carter has been using KSU-1 materials in stand establishment and photoperiod response studies, and tests additional materials at his testing sites in Botswana.

University of Nebraska. Mr. David Andrews collaborates in the exchange and evaluation of materials produced by University of Nebraska and KSU-1. Drs. Eastin, Maranville and Clark use KSU-1 materials in their experiments, and provide additional evaluation information to this project.

Mississippi State University. Dr. Gourley will evaluate KSU-1 materials for tolerance to acid and aluminum soils and Dr. Zummo has provided introduction material that he has collected and evaluated in West Africa.

At last report, materials developed by KSU-1 in the Asian Subcontinent ecogeographic zone are now being used and incorporated into the Indian national millet breeding program. Characteristics now being developed in KSU-1 should alleviate some constraints to millet production in the East Africa zone.

Objectives, Research Procedures, and Production/Utilization Constraints

Millet Constraints

Constraints to productivity that could be influenced by breeding efforts would be genotype or cultivar interaction with the following: seedling vigor and stand establishment, amounts and patterns of precipitation in relation to drought tolerance, photoperiod sensitivity and seasonal duration, reaction to insects, diseases, birds, and *Striga*, production and cultural practices, and poor soil fertility. Several constraints and problems are associated with the use of the crop, ranging from stalk characteristics needed for forage or construction to the apparent food quality of the grain in regard to nutritional value, ease of processing, and consumer acceptability. These constraints affect productivity in varying degrees in all millet producing areas of the world.

Year 6 Project Objectives

1. To develop widely adapted, early maturing pearl millet populations, lines, and hybrids with a) improved drought tolerance, seed size, lodging resistance, and grain yield; b) insect, disease, bird and *Striga* resistance; and c) good food quality characteristics.

2. To evaluate materials developed in this program under a wide range of environments and farming systems in the developing countries and to put superior lines and cultivars into farmer's hands.

Changes in Objectives

Year to year changes in the program objectives are few because breeding methods, procedures, and objectives usually require more than one year to complete.

The EEP has recommended omitting work with goitrogenic millet materials. No further work has been done or is planned in this direction.

Work on seed quality characteristics such as bran thickness, oil content as related to consumer acceptability, and ease of seed decortication has been temporarily halted.

Research Procedures Used

Standard breeding procedures for open-pollinated plants are used. Pedigree breeding methods are used for the early development of nearly all materials entering the program, the advancement of elite lines and lines

extracted from populations undergoing recurrent selection. Population improvement is carried forward using the following recurrent selection methods: mass selection, gridded mass selection, and the S_1 and S_2 progeny performance testing methods. Screening and evaluation is conducted at several Kansas, Nebraska, and LDC locations.

Problems Regarding Achievement of Objectives

Adverse weather conditions have been the primary limiting constraints on the domestic program. Planting of much of the program material was delayed until late June because of wet soils. Drought stress during the latter part of the growing season reduced seed yields, and freezing temperatures occurring in late September when seed moisture contents were high drastically lowered the quality (germination) and numbers of suitable material planned for use in LDC's. The problem was compounded because a similar situation occurred in 1983 and quantities of remnant seed from previous years had been depleted. Although germination tests of a large number of materials provided guidance in the elimination of selections flowering after August 20-25, variable damage was suffered by a wide array of lines and populations that flowered earlier than August 25. The resultant poor seed quality greatly restricted the type and seed availability of materials suitable for evaluation use in LDC's and caused numerous problems in the KSU testing program. Nearly all of our tests and breeding plantings were plagued by poor stands and missing plots because of reduced germinability and variable seedling vigor.

Compared to sorghum, pearl millet has poor survivability when seeds containing high moisture levels are exposed to temperatures below freezing. In only one year since 1971 have volunteer millet plants emerged in the spring following winter exposure. The probability of the Fort Hays Experiment Station receiving freezing temperatures in September is about 5 percent and the chance of this occurring in two consecutive years is remote. Temperatures on September 29 and 30 were 29 and 25°F, respectively, which equaled or exceeded the record low temperatures for those dates.

Temporary duty as acting head of the Fort Hays Experiment Station from late December 1984 through April 1985 prevented travel to LDC's by W.D. Stegmeier.

Project Output

Relevant Research Findings for Immediate Use

Two pairs of pearl millet cytogenic male-sterile and maintainer lines were approved for a joint release by KSU/INTSORMIL and ICRISAT. The 1984 Coordinators Review of the all India Millet Improvement Workshop reported that these two lines are being widely used in India both to make F_1 hybrids and in the breeding of new male-sterile lines. Previously, the AICMIP Coordinator had recommended, based on 1983 performance of these F_1 lines, that all Indian millet breeders incorporate these lines into their breeding programs.

Research Progress and Products Available in One to Three Years

Although progress has been made over the last 10 years in selecting lines and populations for resistance to lodging we had been unable to develop millet materials possessing 90 to 100 percent seed set and high grain yield coupled with lodging resistance approaching the resistance found in improved sorghum materials. Lodging in millet can be due to several factors: poor root penetration in soils containing clay or developing a hard pan, reduced secondary and brace root development, thin stalk rind, the formation of what appears to be an abscission layer in the nodes, and disintegration of the stalk pith in the internodal stalk areas when the plant is drought-stressed at physiological maturity. Progress has been made in reducing or eliminating lodging due to poor root development characteristics and breakage at the node, but until 1984 we had been unable to identify lines resisting disintegration of the pith or lines with sufficient rind thickness.

Disintegration of the pith appears to be associated with drought stress during the later seed-fill period and lodging occurs at or shortly after the seeds reach physiological maturity. At this stage there appears to be a shriveling of the pith tissues above the node, the tissues pull away from the stalk rind, and a cavity is formed. Since most millets have a relatively thin rind, the stalk will buckle or break at the point where the cavity appears. Cavitation within the stem can occur within any internode but most frequently occurs in the peduncle, just above the peduncle node, allowing the head to break over. This may explain why nearly all of the African landraces and varieties in our collection have poor head exsertion with up to one-third of the base of the head in some lines remaining within

the flag leaf-sheath. This characteristic does reduce peduncle breakage, however, if the leaf sheath is loose and seed develop at the base of the head, they often become moldy, reducing food quality.

In 1984, severe lodging occurred at physiological maturity, particularly peduncle breakage, within all of our plantings. We found 12 F_4 and F_5 lines derived from three African and Asian accessions that had good seed set and appear to maintain a high level of integrity of the stalk pith. The best of these lines are progenies of crosses between two Kansas lines and IP 2789, a club-headed introduction obtained from the ICRISAT germplasm collection. Crosses have been made among these 12 lines and to several other Kansas lines. Twenty-eight of 53 F_1 hybrids appeared to have greatly improved lodging resistance in 1985. Crosses are also being made between three of these lines and one Sudan accession possessing a thick stalk rind, two Sudan accessions possessing prolific brace root systems, and to several Tamil Nadu accessions obtained from ICRISAT. The Tamil Nadu materials have an elevated sugar content in the stalk that may contribute to reduced levels of lodging. Segregating F_2 families of these materials will be sent to LDC's in 1986 and 1987. It is anticipated that these materials could contribute grain yield enhancement and improved stalk strength for construction purposes.

New accessions obtained for 1984 evaluation included 57 landraces and cultivars collected throughout Sudan and seven lines, varieties, and populations from Dr. R.P. Jain's ICRISAT breeding program located at Wad Medani and El Obeid, Sudan. Two cultivars have increased thickness of the stalk rind and four cultivars were observed to have very aggressive brace root development. These traits may help reduce lodging in the Kansas materials. Several lines were noted as having large head diameters, lack of tip sterility, wide leaves (an indication of increased stalk diameter) and several other traits that are being incorporated into the program.

A total of 90 items were grown under APHIS quarantine permit in the 1984-85 greenhouse and will be evaluated under field conditions in 1985.

The sources of these materials and comments concerning their characteristics are as follows:

Source	Number of items	Characteristics
Nigeria	8	These materials vary in duration of time of seed fill. An extended fill duration should contribute to increased seed size and grain yield.
ICRISAT		
(1) B-lines	5	These are proved B_1 or fertility maintainer lines to be crossed to Kansas B lines to increase genetic diversity within the program.
(2) Genetic stocks	32	Several of these items possess genetic and germplasm traits such as glossy leaves and should prove useful in genetic linkage studies.
(3) F_1 hybrids	38	These are crosses between Kansas lines reselected for downy mildew resistance by ICRISAT and advanced ICRISAT lines possessing excellent grain yield potential.
Australia	7	These are advanced lines selected for desirable agronomic characteristics and yield potential that are unrelated to the Kansas program.

In addition to the 90 items imported we obtained 30 Ethiopian landraces and cultivars from the Plant Introduction Station, Experiment, Georgia. Several of these were identified as having been collected at elevations of 1500 meters or higher. It is possible that some of these materials may possess tolerance to temperatures below 13.9 C, a threshold level at which disruption of meiosis occurs in much of the Kansas material. Up to this time, very few Ethiopian materials were available to plant breeders.

As new pearl millet accessions pass through APHIS quarantine they are crossed to elite Kansas inbred lines and hybrids of B X B, and R X R parentage. In the summer of 1984 a total of 147 Kansas X APHIS hybrids from the 1983-84 greenhouse were grown and 133 hybrids were produced in the 1984-85 greenhouse and planted in June of 1985 to produce F_2 segregating families. Additional sources of new genetic combinations are obtained by

intercrossing within elite Kansas materials. In 1984, 19 B X B and 41 R X R F_1s were planted and a total of 83 hybrids of this kind were planted in 1985. F_2 families producing superior segregates are regenerated by planting their F_1 parents in the greenhouse and field to produce additional F_2 seed for planting and selection the following year to send to LDC's for selection under their conditions.

Population improvement of six random-mating, mass selected populations was continued or initiated in 1984 and 1985. These included the following: two tall or normal height populations, HMP559, a long-headed population based on Plant Introduction Station lines, and HMPWCC, based on a composite of 1450 lines from the world collection. Two populations, Series 2 and Series 5, containing plants of normal, D_1 and D_2 height are based on Plant Introduction Station and World Collection composite germplasm, respectively.

Two new populations were grown in 1984. A bristled population with bristling characteristics that vary in length, density, and stiffness, and with plant heights ranging from D_2 to normal was formed by random-mating within 95 bristled varieties, landraces, and inbred lines. The second, a dwarf population, tentatively named HMP- , was formed by random-mating the best selections from within six populations that had been in recurrent selection population improvement. A second random-mating occurred in the winter nursery and a third, during summer, 1985. This population will be placed in an S_1 progeny performance testing program in 1986. HMP-POP was initiated because the older populations in S_1 improvement were being rapidly by-passed by the potential of new inbred lines developed in the pedigree program. The consolidation of the six older populations has created a single superior population with excellent potential. This has provided room in the project to advance Series 2 and 5 to recurrent selection and to allow the formation of new populations based on the newer lines arising from the pedigree breeding program.

Following the third cycle of random-mating and mass-selection, HMP-POP was included in nurseries sent in fall 1985 to Botswana, Kenya, and Zimbabwe and will be sent to northern hemisphere LDC's in spring 1986. The bristled population should be ready for initial testing in fall 1986. Seed of several populations are sent to LDC's following each cycle of improvement.

Stand establishment of pearl millet has been positively correlated with increased seed size and seed density. Very little work has been reported on

elongation of mesocotyl and coleoptile structures and their relationship to seedling emergence and stand establishment. Screening of more than 200 inbred lines indicated variation occurs and the differences are highly significant. The range for mesocotyl, coleoptile, and total seedling lengths were 52 to 167, 14 to 30, and 69 to 188 mm, respectively. In the field, planting at a depth of 3.2 cm showed no difference due to mesocotyl length. Emergence from a 6.4 cm planting depth was excellent with long mesocotyl seedlings and poor for short mesoscotyl materials. Several superior lines are being increased in 1985 and will be included in the 1986 nurseries.

A breeding tool is being developed that promises to benefit millet breeders in both LDC's and in the U.S. Large quantities of pollen must be collected and bulked to enable the breeder to random-mate within non-isolated bagged population materials or to produce large amounts of F_1 seeds of crosses between two inbred lines. When done by hand it is a costly, labor intensive practice. We are adapting a battery powered, miniature hand-held vacuum cleaner for this purpose. The device consists of the vacuum cleaner, an adjustable valve to control air flow and a pollen collection chamber. Numerous sizes and shapes of chambers with various configurations of baffles are being evaluated to allow selection of a type that will collect pollen gently with minimal cell wall damage. The pollen collected is screened to remove trash. A hand-held propane torch is used to flame sterilize the collector and sieve after each use. This procedure, when used in conjunction with Dr. Glenn Burton's method of storing dried, frozen pollen, will give the breeder more latitude in making crosses between materials of differing maturity and avoid split planting dates. The breeder will be able to use field, greenhouse facilities and labor more efficiently, and to avoid the necessity of including all parental materials in crossing blocks.

Networking Activities

This project was visited by the following scientists:

- August 27 and 28, 1984. Joseph Okello, Mali, plant breeder. Arrangements were made to supply seed of several millet lines and populations.

- September 27 and 28, 1984. Mr. David Andrews, University of Nebraska, plant breeder. Viewed and discussed project work and exchanged materials.

Germplasm Exchange

Millet breeding lines, populations, F_2 families and hybrids were sent to the following:

Dr. S.C. Gupta, ICRISAT, Senegal; planted two pairs of male-sterile/maintainer lines and 50 F_2 families at Bambey and Nioro, Senegal. Three F_2 families had high agronomic scores and low scores for downy mildew and smut.

- Drs. S.C. Gupta and L.R. House, ICRISAT, Zimbabwe; six populations, 34 inbred lines.
- Dr. D. Carter, KSU-7, Botswana; seven lines.
- Dr. R. Neild and J. Logan, University of Nebraska; four populations, two hybrids, for use in the Dominican Republic.
- Drs. J. Maranville, J. Eastin and D. Andrews, University of Nebraska; six to 31 items for research evaluation and breeding purposes.
- Mr. J. Okello, Mali; 20 items.
- Mr. M'Baye N'Doye, Senegal, via D. Andrews; two populations.

Travel

- Babrak Khaleeq visited the USDA/Georgia pearl millet program at Tifton, Georgia October 20 to 25, 1984 conferring with Drs. Hanna and Burton and observing their materials, methods and procedures.
- Babrak Khaleeq attended the American Society of Agronomy meetings in Las Vegas, Nevada, November 25 to 30, 1984.
- Babrak Khaleeq and W.D. Stegmeier attended the SICNA meetings February 18 to 20, 1985 and the INTSORMIL Principal Investigators meeting February 20 to 21, 1985 at Lubbock, Texas.
- Babrak Khaleeq traveled to Molokai, Hawaii May 16 to 25, 1985 to harvest the winter nurseries.

Publications and Presentations

Lawan, M., F.L. Barnett, B. Khaleeq, R.L. Vanderlip. 1985. Seed density and seed size of pearl millet as related to field emergence and several seed and seedling traits. Agron. J. 77:567-571.

Harvey, T.L., H.L. Hackerott, T.J. Martin, and W.D. Stegmeier. 1985. Mechanical insect dispenser for infesting plants with greenbugs, Schizaphis graminum (Rondani) (Homoptera: Aphididae). Journal of Economic Entomology. 78:489-492.

Changes in Year 7 Research Plans from Year 6.

Research and breeding efforts with populations, inbred lines and F_1 hybrids will continue as in Year 6, however, increased emphasis will be placed on the determination of the mode of inheritance of the gene or genes conditioning resistance to lodging and initial crosses will be made to transfer this characteristic into all populations and several elite lines.

Work will begin to determine if the degree of light transmittance through pearl millet seed (opaque to translucent) can be correlated or associated with a seed or seedling characteristic of economic value. Work with a small sample of materials indicates the opaque condition is not associated with increased lysine content as it is in maize. Scanning electron microscopy shows a difference in the structure of the protein matrix in which the starch granules are embedded in the endosperm. Work will begin to determine correlations between light transmittance and the following seed and seedling characteristics: seed density (associated with stand establishment), in vitro digestibility, variation in content of essential amino acids, crude protein content, milling and processing characteristics, storage insect activity, oil content, germination index, seedling vigor, variations in seedling anatomical structures, and consumer acceptability or preference. If an association does exist the breeder will have a fast, efficient, low-cost tool suitable for screening large populations of seeds prior to planting.

Entomology

Executive Summary

Pit storage research showed that underground pits lined with plastic were much more suitable for preservation of stored millet than pits lined with plant residues (straw). Moisture content of the grain remained constant, seed viability was less affected, insect populations were suppressed, and there was no evidence of molding in plastic-lined pits.

Pit storage is particularly applicable to dry areas (West Africa, East Africa, and the Asian subcontinent, especially India and Pakistan). Further research may show a potential for pit storage in more humid areas. (KSU-4)

The impact of fall armyworms on sorghum in monoculture and in intercropping production systems in southern Honduras was investigated. Sorghum with a natural weed infestation and sorghum-corn (same hill) systems had lower fall armyworm infestations than sorghum with a corn trap crop or sorghum in monoculture. Suitable sorghums with resistance characteristics have not been identified, but field, greenhouse and new laboratory techniques are being used to enhance host plant resistance studies. Cultural management practices employed for insect control are being emphasized for practical implementation by subsistence farmers.

Insecticide efficacy studies and biological investigations with fall armyworms from Honduras and the U.S. suggest differences in populations from these two areas, thus providing information on migration and insecticide resistance. (MSU-5)

New sources of resistance to the sorghum midge were identified. Other research determined the function and role of improved resistant cultivars in integrated pest management systems. Density/damage relationships were determined for the yellow sugarcane aphid, a pest of tropical America. Sources of sorghum resistance to the sugarcane aphid were identified in Botswana, and research in this area will constitute major efforts during the next two years.

Panicle feeding bug severity was assessed in Niger and Mali, and formed the basis for a concentrated in-country research effort to be initiated in Year 7. Biotic and abiotic factors affecting sorghum stemborer density in Honduras were assessed, and data to support the release of an exotic parasite species were collected. Research on stemborers and a head girdler of millet was initiated in Niger. (TAM-25)

Storage and Preservation of Pearl Millet and Sorghum

Project KSU-4

Robert B. Mills and John R. Pedersen

Kansas State University

Other Researchers

Valerie F. Wright, Kansas State University, Department of Entomology, Assistant Professor

Summary

Activities during July, 1984, to June 30, 1985, were continuations of the research in progress when KSU-4 was terminated July 30, 1984. Underground pits lined with plastic were much more suitable for preservation of stored millet than pits lined with plant residues (straw). Moisture content of the grain remained constant, seed viability was less affected, insect populations were suppressed, and there was no evidence of molding in plastic-lined pits.

Evaluation of numerous millet cultivars revealed large differences in susceptibility/resistance to stored-grain insects.

Institutions

Collaborating Host Country: None, although arrangements have been made with Sudan (Dr. M. E. Hassan Shazali) for collaboration.

U.S.: Kansas State University

Linkages:

During Year 6 we have corresponded with Dr. M.E. Hassan Shazali of the Agricultural Research Corporation, Sudan, to establish linkages for cooperative research in Year 7 for the new project, KSU-9. We have received word from Dr. Shazali that the Sudan government has approved our request for him to visit our research facilities, observe research of our foreign grain-storage students (three from Sudan), and to plan a cooperative storage research project that Dr. Shazali can conduct in Sudan.

We have been given assurance from sorghum breeders at Texas A&M University that they will cooperate with us by providing test materials.

Ecogeographic Zones Most Benefited by Research

Stored-grain insects are especially a problem in tropical or subtropical areas, more so in the moist areas. All of the ecogeographic

zones would benefit from storage research. Our pit storage research is more applicable to the dry areas (West Africa, East Africa, and the Asian Subcontinent, especially India and Pakistan). Further research may show a potential for pit storage in more humid areas.

Objectives, Research Procedures, and Production/Utilization Constraints

(Note: Our KSU-4 project was terminated June 30, 1984 but we continued some of the INTSORMIL research in progress at that time, using carry-over funds. The following are related to that research.)

Sorghum/Millet Constraints

We had difficulty making firm linkages with personnel in Sudan, particularly at the time negotiations were still going on between INTSORMIL and the Sudan government. However, we have been more successful during the past year.

Year 6 Objectives

1. Determine the species and relative abundance of stored-grain insects and fungi in millet and extent of damage and loss by their activities.

2. Evaluate local storage and pest control practices and their effectiveness in maintaining quality of millet, and potential for adapting new technology.

3. Evaluate millet materials for host resistance to stored-grain insects.

4. Train LDC personnel in-country and at Kansas State University.

Research Procedures

Because of our numerous attempts to establish practical linkages with Sudan, we did not initiate research in any host country. Our research was done in laboratories of the Department of Entomology and Department of Grain Science and Industry, and at the KSU Food and Feed Grain Institute's storage research and training facility. Evaluations were made of simulated LDC storage, and of underground pit storage in the field, and laboratory evaluation was done of the resistance of numerous cultivars of millet to stored-grain insects. Laboratory studies involved determining the amount of damage done to resistant or susceptible millet kernels by single stored-grain insects; and evaluating sorghum types for susceptibility to damage and loss by stored-grain insects while stored in-head or threshed. Laboratory

investigations included study of the various factors responsible for resistance to damage and loss.

Problems Regarding Achievement of Objectives

We were operating on carry-over funds, and these were unexpectedly reduced to help solve INTSORMIL budget problems.

Project Output

Relevant Findings Available for Immediate Use

Project-supported laboratory research of a Cameroon graduate student determined the effectiveness of air-tight storage of millet in 5-gallon containers. In a field study using six pits, he demonstrated the superiority of plastic linings over plant residue (straw) linings in suppressing insect populations, maintaining seed viability, and inhibiting mold invasion. The student returned to Cameroon with expectations of working in the field of grain storage and promoting use of plastic for lining storage pits.

Research Progress for Future Use

Studies of the conditions within bulks of grain stored in pits, and testing different lining materials should provide valuable information on this type of storage.

Results of studies on in-head vs. threshed storage of sorghum may provide recommendations for improved storage in LDC's.

Networking Activities

One of the co-principal investigators is the KSU/AID representative to the Group for Assistance on Systems Relating to Grains After Harvest (GASGA). GASGA met in July 1984 and June 1985 to exchange information on projects and research. Other members of GASGA include the Tropical Development Research Institute (London), IRAT/CIRAD (Montpellier, France), International Development Research Center (Canada), FAO (Rome), GTZ (Eschborn, West Germany), Australian Center for International Agricultural Research (Australia), and Royal Tropical Institute (Netherlands).

Travel

- March 11 - 14, 1985. Cletus Asanga presented a paper on his pit storage research at the Annual Meeting of the North Central Branch of the Entomological Society of America, Lexington, Kentucky.

Publications and Presentations

Publications

Seifelnasr, Y.E. and R.B. Mills. 1985. Resistance of pearl millet to Sitophilus oryzae, Sitotroga cerealella, and Rhyzopertha dominica. J. Econ. Entom. 78(1):181-184.

Two manuscripts by C.T. Asanga and R. B. Mills on airtight and pit storage have been submitted to editors of scientific journals.

Presentations

Asanga, Cletus T. and R. B. Mills. Underground pit storage of millet grain. Paper presented by Asanga at the 1985 meeting of the North Central Branch of the Entomological Society of America, March 11 - 14, 1985, Lexington, Kentucky.

Changes in Year 7 Objectives

1. Identification and evaluation of existing grain storage facilities and practices in the host country (Sudan).

2. Evaluation of traditional stored-grain insect control methods and materials, including further research on pit storage.

3. Determination of levels of stored-grain insect resistance among sorghum and millet cultivars obtained from the host country and INTSORMIL breeders.

4. Identification and monitoring of stored-grain populations by use and evaluation of simple traps.

Biological Investigations and Management of the Fall Armyworm and Other Insect Pests on Sorghum

Project MSU-5

Henry H. Pitre and Billy R. Wiseman

Mississippi State University

Host Country Principal Collaborators

Dan Meckenstock, Agronomist (TAM 31), INTSORMIL/Honduras

Mr. Rigoberto Nalasco P., Agronomist, Honduras

Dr. Gabriel Diez Castro, Entomologist, Mexico

Ing. Rafael B. Muniz, Entomologist, Mexico

Other Researchers

Host Country

Dr. Gerardo Reyes, Recursos Naturales, Head, Section of Agricultural Investigations, Honduras

Ing. Federico Ramos, Regional Director, Office of the Ministry of Natural Resources, Honduras

Ing. Orly Garcia, Regional Director of Agriculture, Honduras

Ing. Evelyn Oviedo, Head, Extension, Regional Office, Honduras

Regional extension personnel in southern Honduras

United States

Dr. John Young, Entomologist, University of Georgia

Dr. Lynn Gourley, Agronomist (MSU-4), Mississippi State University

Dr. Sonny Ramaswamy, Insect Physiologist, Mississippi State University

Dr. Peter Sikorowski, Insect Pathologist, Mississippi State University

Ms. Willie Harrison, Quarantine Officer, USDA, Stoneville, MS

Summary

Progress has been made in investigations of the impact of fall armyworms in sorghum monoculture and in intercropping production systems in southern Honduras. Aspects of the biology and population dynamics of this pest on several crop hosts and the relationships of the immatures (larvae) and adults with crop and non-crop vegetation in these production systems provides information essential to the development of pest control strategies.

Observations on the influence of natural enemies of the immatures suggest the inability of the naturally occurring beneficial organisms to successfully control this pest species. Suitable sorghums with resistance characteristics have not been identified, but field, greenhouse and new laboratory techniques are being used to enhance host plant resistance studies. Cultural management practices employed for insect control are being emphasized for practical implementation by subsistence farmers. Insecticide efficacy studies and biological investigations with fall armyworms from Honduras and the U.S. suggest differences in populations from these two areas, thus providing information on migration and insecticide resistance. (This pest is resistant to some insecticides in certain areas of the United States.)

Graduate student research projects addressing the above areas of insect pest management on sorghum are active in Honduras. Foreign student training and research coordination with in-country scientists has provided for a successful entomological program (MSU-5) in Honduras.

Institutions

Collaborating Host Countries:

Honduras: Ministry of Natural Resources
- a. Agricultural Investigations
- b. Agricultural Extension

Mexico: INIA, CIAB

United States

USDA, Insect Biology & Population Management Res. Lab., Tifton, Georgia

Linkages

Honduras: A collaborative research agreement between the Secretary of Natural Resources and the International Sorghum and Millet Program (INTSORMIL) has been successfully employed. The MSU-5 project is linked with INTSORMIL research (TAM-25) and with agricultural and extension personnel and programs of the Ministry of Natural Resources. In-country research programs are in place and graduate students from Honduras are participating.

Mexico: Linkage research relationships have been established in Mexico, primarily with INIA, CIAB. The limitation of this relationship is

the lack of graduate student participation in the in-country research program. Attempts are being made to find interested and suitable students.

Ecogeographic Zones Most Benefited by Research

1. Eco/Geo Zone 5
2. Eco/Geo Zone 4

Objectives, Research Procedures, and Production/Utilization Constraints

Sorghum Constraints

Insect pests, including soil inhabiting species, damage or destroy the seed and reduce plant stands; stem and stalk borers weaken and/or destroy the plants; and head feeding insects destroy the seed, thus reducing yield.

Year 6 Objectives

1. Investigate aspects of the biology, behavior, ecology and dynamics of fall armyworm populations.
2. Evaluate sorghum genotypes for fall armyworm resistance.
3. Develop pest control strategies for fall armyworm, including cultural, biological and chemical control tactics.

Changes in Objectives from Previous Year

Research has continued to emphasize the fall armyworm as a principal insect pest constraint to sorghum production in Honduras; the information obtained can be transferred to other Central and South American countries. Thus, no significant changes in objectives were made from Year 5 (see plans for Year 6).

Research Procedures

Research procedures for objectives stated above were included in report of plans for Year 6 (see MSU-5, planning for Years 6, 7, and 8).

Problems Regarding Achievement of Objectives

The lack of trained entomologists in the host countries (Honduras and Mexico) restricts the extent of entomological study in these areas. Entomologists trained in the INTSORMIL program will return to their home host country to provide leadership in insect pest management. An increase in INTSORMIL budget for MSU-5 would allow for the support of additional graduate students from LDC-Latin American countries to be trained in entomology.

Project Output

Research Findings

Studies on fall armyworm biology, including host crop feeding, developmental rate and adult activity of populations from Honduras and the U.S. (MS) indicate sufficient differences in country cultures (populations) to suggest that populations in southern Honduras may not be associated with the long range movement (migration) of this pest into the continental U.S. Similar progress comparing fall armyworm populations from different areas in Honduras, the Caribbean Basin and the U.S. provide information on this migratory pest for use in developing insect pest control strategies. This insect has developed resistance to some insecticides in the U.S.

Population dynamics of the fall armyworm on the first planting of sorghum in monocrop and in intercropping systems in southern Honduras have been investigated. The influence of intercropping on armyworm populations and damage to sorghum has been identified for the areas of sorghum production in southern Honduras. This information is essential in the development of practical and timely insect pest control methods. A trap crop, i.e., corn, as a pest management tactic, is being further investigated in the systems of sorghum production of Central American agriculture. Cultural methods of pest control are under investigation in host country sites and in the U.S.; the successful methods can be recommended and, as investigated, are immediately transferable.

Insecticide efficacy evaluations against fall armyworm larvae on whorl-stage sorghum provided information for recommendations on the use of insecticides for control of this pest. Additional information is needed on the most practical application techniques for use by the small farmers.

Research Progress that May Soon be Available for Farmer Use

1. Planting strategies, incorporating polycropping, intercropping and/or trap-cropping techniques to escape/reduce damage by fall armyworms.

2. Use of biological control agents in management of fall armyworms. Investigations of the role of biological control agents have suggested that these natural enemies are not successful in managing fall armyworm populations in southern Honduras. However, specific, predominant parasitoids will be emphasized in biological control investigations, utilizing cropping system-natural enemy refuge techniques.

3. Investigations of insect resistance in sorghum genotypes continues to emphasize sorghum materials with glossy and trichome characteristics. These sorghums have shown resistance to other insect pests.

Networking Activities

Workshops:

- March 26 - 28, 1984. First National Sorghum Production and Utilization Seminar, Dominican Republic (presented paper).
- July 15 - 20, 1984. International Workshop on Sorghum Insect Pests, Texas A&M University (presented paper).

Germplasm and Research Information Exchange:

- Sorghum genotypes with insect resistance characteristics from ICRITSAT. (Dr. R.K. Maiti cooperating.)
- Research information exchange with Dr. Keith Andrews, entomologist, Pan American Agricultural School, Zamorano, Honduras.

Assistance to Host Country Researchers:

- Laboratory equipment (microscope, refrigerator, laboratory supplies).

Travel

- March 26 - 28, 1984. H.N. Pitre, Dominican Republic, to participate and present paper at First National Sorghum Production and Utilization Seminar (Santo Domingo, discuss entomological research coordination between INTSORMIL and CESDA).
- May 15 - August 25, 1984. M.T. Castro, Honduras, to conduct entomological research on fall armyworms on sorghum.
- July 20 - 26, 1984. H.N. Pitre, Honduras, to observe progress and advise graduate students in research and to coordinate MSU-5 with in-country researchers.
- January 1984. H.N. Pitre, Arizona, INTSORMIL Annual Review Meeting, to review progress of research projects and to discuss international linkages.

Publications and Presentations

Publications

Schwager, B., H.N. Pitre and L. Gourley. 1984. Field evaluation of sorghum characteristics for resistance to fall armyworm. J. Georgia Entomol. Soc. 19:333-339.

Wiseman, B.R., H.N. Pitre, L. Gourley and S.L. Fales. 1984. Differential growth responses of fall armyworm larvae on developing sorghum seeds incorporated into a meridic diet. Fla. Entomol. Soc. 67:357-367.

Wiseman, B.R., H.N. Pitre and S.L. Fales. 1984. A laboratory bioassay for sorghum resistance to the fall armyworm. Proc. 14th Biennial Grain Sorghum Res. and Util. Conf. Brownsville, Texas.

Castro, M., H.N. Pitre, R. Nolasco P. 1984. Densidad de Poblaciones de Larvas de Cogollero en Sorgo. Departmento de Investigacion Agricola Reports Anual., Recursos Naturales. Tegucigalpa, Honduras 4 pp.

Castro, M., H.N. Pitre, R. Nolasco P. 1984. Influencia de Sistemas de Siembra Maiz-Maicillo en Infestaciones de Cogollero. Departmento de Investigacion Agricola Reporte Anual., Recursos Naturales. Tegucigalpa, Honduras. 2 pp.

Castro, M., H.N. Pitre, and R. Nolasco P. 1984. Investigaciones de Control Biologico de Cogollero. Departmento de Investigacion Agricola Reporte Annual., Recursos Naturales. Tegucigalpa, Honduras. 3 pp.

Presentations

Insect Problems on Sorghum in the United States. International Workshop on Sorghum Insect Pests, Texas A&M University, (July 1984).

INTSORMIL Research at Mississippi State University, First National Sorghum Production and Utilization Seminar, Dominican Republic, (March 1984).

A Laboratory Bioassay for Sorghum Resistance to the Fall Armyworm. 14th Biennial Grain Sorghum Research and Utilization Conference (Brownsville, Texas).

Changes in Year 7 Project Research Plans from Year 6

The addition to the MSU-5 Project of a second graduate student from Honduras has allowed for the expansion of the research effort in southern Honduras. The areas of new research include identification and distribution

of soil insect pests and early season insect pests of sorghum, as well as aspects of the biology, ecology, behavior and control of key pest species. (This work was initiated in May 1985 in cooperation with the Honduras Ministry of Agriculture, Division of Agricultural Research and Division of Agricultural Extension, in southern Honduras.) Research as outlined under objectives for MSU-5 for Years 6, 7, and 8 will receive continued emphasis, particularly relating to the fall armyworm constraint to sorghum production.

Development and Evaluation of Systems for Controlling Insect Pests of Sorghum by Integration of Resistant Varieties, Cultural Manipulation and Biological Control

Project TAM-25

George L. Teetes and Frank E. Gilstrap
Texas A&M University

Host Country Principal Collaborators

S.D. Maiga, INRAN - Niger

K.F. Nwanze, ICRISAT - Niger

C.S. Manthe, DOA - Botswana

K. Andrews, Escuela Agricola Panamericana (EAP) - Honduras

Other Researchers

Host Countries

R. Reyes, El Salvador - Entomology

R. Clara, El Salavador - Plant Breeding

K.V. Seshu Reddy, Kenya - Entomology

J. Scheuring, Mali - Plant Breeding

R.T. Gahukar, Senegal - Entomology

K. Leuschner, India - Entomology

C.J. Rossetto, Brazil - Entomology

J. Silva, Brazil - Entomology

R. Bujanos, Mexico - Entomology

United States

G. Peterson, Texas A&M Experiment Station, Lubbock, Plant Breeder

G. Steck, Texas A&M University, Niger, Entomologist

G. Michels, Texas A&M Experiment Station, Amarillo, Entomologist

F. Miller, Texas A&M University, Plant Breeder

R. Frederiksen, Texas A&M University, Plant Pathologist

Summary

Insect pests reduce yield and yield stability of sorghum/millet and increase labor and production costs. Sorghum/millet resistant to insect pests and biological control using exotic natural enemies are most applicable to insect pest management in LDC's where insecticides are in short supply, dangerous and expensive.

Research during Year 6 of this project involved identifying new sources of sorghum resistance to the sorghum midge (a cosmopolitan pest), determining the function and role of improved resistant cultivars in integrated pest management systems, and determining resistance mechanisms. Density/damage relationships were determined for the yellow sugarcane aphid, a pest in tropical America. Sources of sorghum resistance to the sugarcane aphid were identified in Botswana and will constitute major efforts during the next two years. Panicle feeding bug severity was assessed in Niger and Mali and formed the bases for a concentrated in-country research effort during Year 7. Biotic and abiotic factors affecting sorghum stemborer density in Honduras were assessed, and data to support the release of an exotic parasite species were collected. Research on stemborers and a head girdler of millet was initiated in Niger.

Foreign graduate student training was a primary contribution of the project. Year 6 research provided significant data toward the development of systems for managing insect pests of sorghum/millet by the integration of resistant varieties, cultural manipulation and biological control that has immediate and long-term application to LDC ecosystems.

Institutions

Collaborating Host Countries:

Niger: Institute National de Reserches Agronomiques du Niger; International Crops Research Center for the Semi-arid Tropics, Sahelian Centre.

Honduras: Ministerio de Recursos Naturales; Escuela Agricola Panamericana

Botswana: Department of Agriculture

El Salvador: Ministerio de Agricultura Y Ganaderia

Kenya: International Center for Insect Physiology and Ecology

Mali: International Crops Research Center for the Semi-arid Tropics

India: International Crops Research Center for the Semi-arid Tropics

Brazil: EMBRAPA

Mexico: INIA-CIAB

U.S.: Texas Agricultural Experiment Stations; Purdue University; Kansas State University.

Linkages

On-site collaborative research has been or is being conducted in Niger, Honduras and Botswana. Agreements with the respective agencies have been developed and approved. Dr. Gary Steck under the supervision of George Teetes working in Maradi, Niger, conducted collaborative research on sorghum panicle feeding bugs with Dr. S. Maiga. Mr. Ousmane Youm initiated Ph.D. studies under the supervision of Dr. Frank Gilstrap on stemborers and the head girdler attacking millet in cooperation with Drs. John Clark (Purdue) and K. F. Nwanze (ICRISAT) in Niamey and Kolo, Niger.

Mr. R.A. Sequeira, an M.S. degree candidate, is conducting thesis research with the approval of the Ministerio de Recursos Naturales in Honduras. His research on sorghum stemborers is also sponsored in part by the Panamerican School of Agriculture in Zamorano Valley.

Mr. C.S. Manthe, a Ph.D. candidate has conducted one year of research on sorghum resistance to sugarcane aphid in Botswana. He will return to Botswana in October to complete the two years of on-site research necessary for his dissertation. His research is also sponsored by USDA and the Botswana Department of Agriculture.

Linkages with other host countries are in the form of technical assistance, especially information supply, project design, germplasm supply, and review of research procedures and results. Foreign graduate student training has provided good linkages with Colombia, Brazil, Sudan and Honduras.

Ecogeographic Zones Most Benefited by Research

West Africa, Central America and Southern Africa

Objectives, Research Procedures and Production/Utilization Constraints

Sorghum/Millet Constraints

A complex of insect pest species attack sorghum and millet during and after production and constitute a constraint to yield and yield stability. Insect pests become especially severe when farming systems change from traditional to the use of improved cultivars and greater energy input. Insecticidal control is common in developed countries but is dangerous and expensive in less developed countries. These constraints led this project to concentrate on plant resistance and biological control expertise that has application to LDC situations.

Year 6 Objectives

1. Screen newly converted exotic sorghums for resistance to sorghum midge; evaluate improved lines alone and in hybrid combination; determine resistance mechanisms; and determine the combined effect of resistant hybrids and insecticidal control on damage to resistant sorghums by sorghum midge.

2. Determine density/damage relationships of yellow sugarcane aphid on seedling sorghum to establish economic injury levels.

3. Using life-table procedures, determine the severity of corn earworm in sorghum and the factors which influence its density in loose and tight headed sorghum cultivars as an initial step in developing techniques for resistance screening.

4. Determine distribution of sorghum midge in commercial sorghum fields to establish density variance for use in determining sample size for accurate scouting, and validate the established biophysical model of the pest in order to quantify population dynamics.

5. Determine the nature and role of headbugs as panicle pests of sorghum in Niger.

6. Screen sorghums for resistance to sugarcane aphid in Botswana and determine resistance mechanisms and inheritance.

7. Complete studies on stemborers in sorghum in the Rio Grande valley and Niger. Initiate new studies at Zamorano and Choluteca, Honduras, to evaluate extant parasites and establish a basis for importation of additional exotic parasites.

8. Initiate studies on the head girdler and stemborers of millet in Niger.

9. Continue life-table studies on efficacy of biological control agents attacking greenbug and sorghum midge on sorghum.

Changes in Objectives from the Previous Year

Project objectives continue to evolve as research information is gained. More foreign graduate student training is underway than expected. Research by these students in the U.S. is being better used to support LDC needs. Objectives are being set that more directly impact LDC situations. Such changes are reflected by the increasing amount of in-country, on-site research.

Research Procedures

Specific research procedures used are described in detail in the plan of work for Year 6. General procedures include those applicable to the implementation of plant resistance and biological control and the necessary biological and ecological support data. Research objectives are for the most part carried out by graduate students in a training mode. Local research is used to establish or test procedures applicable to LDC situations and to provide the support of on-site research in terms of data, germplasm, biocontrol agents and other procedural needs.

Problems Regarding Achievement of Objectives

There remains a lack of trained entomologists assigned responsibility for sorghum/millet insect research in many LDC's. This fact stresses the need for graduate student training with appropriate follow-up support. Host country funds for sorghum/millet insect research is low to none. Procedures to funnel small amounts of money to certain LDC's need to be established.

Project Output

Research Findings for Immediate Use

During Year 6, 266 newly converted exotic sorghum lines were screened for resistance to sorghum midge. Ten lines were highly resistant, two in particular. These were crossed to other resistant lines to find if the resistance was controlled by the same or different genes. The lines were crossed to susceptible lines to test for dominance. These lines and others are available for testing in LDC's. Sorghum midge resistant sorghums in various stages of agronomic improvement have immediate application to midge control in most LDC's.

Field experiments during Year 6 showed that less insecticide, because of fewer applications at longer intervals, was required to prevent damage by sorghum midge attacking resistant hybrids than susceptible hybrids. The two control tactics were synergistic and significantly lowered control costs. These results have special application to LDC's where insecticides are often expensive and in short supply.

Sorghum midge-resistant hybrids were visited less by adult midges, were less egg infested, and caused higher levels of immature midge mortality than susceptible hybrids. The identification of the responsible resistance mechanisms provide immediate insight into resistance modality necessary to

identify different resistance sources and will be especially important in the implementation phase of sorghum midge resistant sorghums in LDC's.

Field trials revealed that yellow sugarcane aphid at very low densities reduced seedling sorghum rate of growth, increased maturity time and reduced yields. These data are being used to establish economic injury levels for insecticide use decisions and provide an immediate means of assessing crop losses by the pest. The procedures used have special application for crop loss assessment in LDC's which is a major constraint to defining priority needs.

An assessment of the severity of sorghum panicle feeding bugs and the species composition was made during Year 6 in Niger. This assessment was the basis for stationing an entomologist in Niger.

On-site research on the sugarcane aphid in Southern Africa was initiated. Research plans and objectives were established based on one year of previous research in-country. These efforts have led to collaborative research that will be underway during Year 7 in Botswana.

Research during Year 6 in Honduras focused on stemborers attacking sorghum and will provide an improved management capability as well as permanently establish a new biological control agent, Cotesia flavipes, of stemborers in Honduras. This biological control agent originally was obtained from Pakistan and has proven highly effective for controlling certain stemborers in numerous other countries including the United States. Preliminary studies in Honduras began in December 1984. Most of the Diatraea (70% - 90%) were in diapause and most were D. lineolata (Neotropical Corn Borer or NCB).

Thus, indications are that in the absence of abundant alternate hosts the NCB population ceases to grow and becomes dormant during the dry season. Biotic and abiotic mortality factors apparently substantially reduce NCB populations during the dry season. The identification of these mortality factors and understanding their potential for management are expected to be important for developing an efficient NCB management program. Diatraea spp. in both Choluteca and Yeguare/Linaca are most common in the upper third of the plant which affects sampling. The borer is synchronized with its host. The most important changes affecting the density of NCB and of its associated parasites occur during the dry season. Four cocoon masses of Cotesia diatraea were collected and reared. Sixteen NCB larvae parasitized

by tachinid parasites were collected. Also, data indicated that sorghum head weight and total grain weight are more affected by stemborers than grain fill. These results and those gained during Year 7 will be integrated where possible into Honduran pest control practices.

Research Progress for Future Use

Research initiated during Year 6 and before that will produce results that will soon be available, including new sources of resistance to sorghum midge and sugarcane aphid. Current research will provide an assessment of damage to sorghum by yellow sugarcane aphid, panicle feeding bugs and corn earworm. Methods for more accurate sampling of several sorghum/millet insect pests will also be available. Procedures to assess the efficacy of several biological control agents are being developed. The effect of various biotic factors on insect pest density and the opportunities for classical biocontrol will be available, especially for stemborers of sorghum and millet and the head girdler of millet.

Networking Activities

Workshops:

- July 16-23, 1984. Co-coordinator and participant in the International Sorghum Entomology Workshop. INTSORMIL/ICRISAT, College Station, Texas.
- Participant in the Plant Resistance to Insects Workshop.
- Participated in the International Study Workshop on Host Plant Resistance and its Significance in Pest Management, Nairobi, Kenya.

Germplasm and Research Information Exchange:

- Germplasm sent to Argentina, Brazil, El Salvador, Honduras, Uruguay, Paraguay, Colombia, Kenya, and others.
- Information exchange with 14 LDC scientists.

Host Country Assistance with Equipment and Supplies:

- Insect curating supplies were sent to Dr. Maiga of INRAN in Maradi, Niger; Sorghum Insect Identification Handbooks were sent to 63 scientists in LDC's; research supplies and equipment were sent to Honduras.

Travel

- September 26 - October 3, 1984. George L. Teetes, Niamey and Maradi, Niger, to assess sorghum head bug severity and determine species composition, and set plans for stationing an entomologist in the country.
- October 3 - 10, 1984. George L. Teetes, Bamako, Mali, to assess sorghum head bug severity.
- July 24 - 26, 1984. George L. Teetes, Berkeley, California, to participate in the Board of Directors meeting of the Consortium for International Crop Protection.
- November 14 - 15, 1984. George L. Teetes, Kansas City, Missouri, to participate in INTSORMIL Technical Committee meeting.

Publications and Presentations

Publications

Melton, K.D., and G.L. Teetes. 1984. Effects of resistant sorghum hybrids on sorghum midge (Diptera: Cecidomyiidae) biology. J. Econ. Entomol. 77:626-631.

Hallman, G.J., G.L. Teetes and J.W. Johnson. 1984. Weight compensation of undamaged kernels in response to damage by sorghum midge (Diptera: Cecidomyiidae). J. Econ. Entomol. 77:1033-1036.

Baxendale, F.P., G.L. Teetes and P.J.H. Sharpe. 1984. Temperature-dependent model for sorghum midge (Diptera: Cecidomyiidae) spring emergence. Environ. Entomol. 13:1566-1571.

Baxendale, F.P., G.L. Teetes, P.J.H. Sharpe, and H. Wu. 1984. Temperature-dependent model for development of nondiapausing sorghum midge (Diptera: Cecidomyiidae). Envirn. Entomol. 13:1572-1576.

Boozaya-Angoon, D., K.J. Starks, D.E. Weibel, and G.L. Teetes. 1984. Inheritance or resistance in sorghum, Sorghum bicolor, to the sorghum midge, Contarinia sorghicola (Diptera: Cecidomyiidae). Environ. Entomol. 13:1531-1534.

Peterson, G.C., J.W. Johnson, G.L. Teetes, and D.T. Rosenow. 1985. Registration of midge resistant sorghum germplasm. Crop Sci. 25:372.

Peterson G.C., J.W. Johnson, G.L. Teetes, and D.T. Rosenow. 1985. Registration of greenbug biotype C resistant sorghum germplasm. Crop Sci. 25:373.

Teetes, G.L. 1985. Entomology research projects and needs in the developed world in relation to developing countries. Proc. International Sorghum Entomology Workshop. Texas A&M University, College Station.

Teetes, G.L. 1985. Headbugs: economic threshold levels and methodology. Proc. International Sorghum Entomology Workshop. Texas A&M University, College Station.

Teetes, G.L. 1985. Sorghum midge biology, population dynamics and IPM. Proc. International Sorghum Entomology Workshop. Texas A&M University, College Station.

Teetes, G. L. 1985. Problems associated with the deployment of insect resistant cultivars. Sym. Proc. Plant Resistance to Insects: Research Strategies for the 21st Century. Entomological Society of America, San Antonio, Texas.

Dhanmaratne, G., J.R. Stoll, R.D. Lacwell and G. Teetes. 1984. Farmer survey of effectiveness of greenbug resistant grain sorghum: Texas Blacklands. Tech. Rpt. 84-1. 49 p.

Fitt, J.R. and G.L. Teetes. 1985. Efficacy of insecticides and insecticide carriers for control of insect and mite pests in cotton and sorghum, 1984. Tex. Agric. Exp. Stn. PR-4298. 13 p.

Waquil, J.M., G.L. Teetes. 1984. Oviposition behavior of sorghum midge on resistant and susceptible sorghum hybrids. Sorghum Newsletter. 27:95.

Hallman, G.J. and G.L. Teetes. 1984. The effect of temperature on sorghum midge oviposition. Sorghum Newsletter. 27:96.

Manthe, C.S., G.L. Teetes and G.C. Peterson. 1984. Preliminary screening of sorghum for resistance to the sugarcane aphid in Botswana. Sorghum Newsletter. 27:97-98.

Hallman, G.J. and G.L. Teetes. 1984. Diapause of the sorghum midge in two resistant and on susceptible sorghum hybrids in Texas in 1981. Sorghum Newsletter. 27:98.

Becerra, M.I., G.L. Teetes and G.C. Peterson. 1984. Combined effects of sorghum midge resistant hybrids and insecticidal control. Sorghum Newsletter. 27:99-100.

Breen, J.P. and G.L. Teetes. 1984. Effects of yellow sugarcane aphid on sorghum seedlings in the field. Sorghum Newsletter. 27:101-102.

Kring, T.J., F.E. Gilstrap, and G.J. Michels, Jr. 1985. Role of indigenous coccinellids in regulating greenbug, Schizaphis graminum (Rondani) on Texas grain sorghum. J. Econ. Entomol. 78:269-273.

Friese, D.D. and F.E. Gilstrap. 1985. A comparative biology for three phytoseiid predaceous on spider mites. Southwest Entomol. 10:83-88.

Pickett, C.H. and F.E. Gilstrap. 1985. Dynamics of species composition for spider mites infesting corn on the Texas High Plains. J. Kansas Entomol. Soc. (IN PRESS).

Gilstrap, F.E., and D.D. Friese. 1985. A comparison of predatory potential of Phytoseiulus persimilis, Amblyseius californicus, and occidentalis (Acarina: Phytoseiidae). Internat. J. Acarol. (In Press).

Brooks, G.W., and F.E. Gilstrap. 1985. Sorghum midge parasites in johnsongrass in Texas. Southwest Entomol. (ACCEPTED).

Gilstrap, F.E., G.W. Brooks, and T.J. Kring. 1984. Status of greenbug biological control in Texas sorghum. TAES MP-1538. 4 pp.

Gilstrap, F.E., and K.R. Summy. 1984. Within-plant distribution of Banks grass mite on grain sorghum in West Texas. Tx. Agri. Expt. Sta. PR-4204. 7 pp.

Teetes, G.L., and F.E. Gilstrap. 1984. Development and evaluation of systems for controlling insect pests of sorghum by integration of resistant varieties, cultural manipulation and biological control. pp. Research Report of the Grain Sorghum/Pearl Millet Collaborative Research Support Program. J.F. Winn (ed.). 225 pp.

Gilstrap, F.E., 1985. Concepts for biological control of arthropods attacking sorghum. proc. International Sorghum Insect Pests Workshop. (IN PRESS).

Sequeira, R.A., S. Kresovitch, and F.E. Gilstrap. 1985. Pyralid stemborers in sweet sorghum cultivars. TAES Prog. Rept. (In Press).

Presentations

Entomological Society of America. San Antonio, Texas. December 9 - 13, 1985. Title: Problems Associated with the Deployment of Insect Resistant Cultivars.

Entomological Society of America. San Antonio, Texas. December 9 - 13, 1985. Title: Resistance Modality of Sorghum Hybrids to Contarinia sorghicola (Coquillett).

Entomological Society of America. San Antonio, Texas. December 9 - 13, 1985. Title: Sorghum Midge Control Following Insecticide Treatments to Resistant and Susceptible Sorghum Hybrids.

Entomological Society of America. San Antonio, Texas. December 9 - 13, 1985. Title: Yellow Sugarcane Aphid Density/Damage Relationships in Seedling Sorghum.

Fifth Annual Conference of the Texas Association of Agricultural Consultants. San Antonio, Texas. February 4, 1985.

Sorghum Improvement Conference of North America. Lubbock Texas. February 18 - 20, 1985. Title: Resistance Mechanisms and Role of Sorghum Midge Resistant Sorghum Hybrids in IPM.

Sorghum Improvement Conference of North America. Lubbock, Texas. February 18 - 20, 1985. Title: Density/Damage Relationships of Yellow Sugarcane Aphid Attacking Seedling Sorghum.

International Sorghum Entomology Workshop. July 15 - 21, 1984. College Station, Texas. Co-coordinator and presented three papers.

Changes in Year 7 Objectives

The general objectives of Project TAM-25 will remain largely unchanged. However, significant changes will occur in the approach to collaborative research from Year 6 to Year 7. Research under this project will emphasize in-country, on-site activities. The research will be concentrated in Honduras, Niger, and Botswana, with students or research associates located in each country. Support activities will be carried out largely by foreign graduate students in order to continue the supply of insect resistant sorghum germplasm, effective natural enemies, and research procedures and information.

Pathology

Executive Summary

Sources of resistance to rough leaf spot disease were identified in sorghum. Rough leaf spot may be important where sorghum is to be grown in areas wetter than normal (rainfall above 1.5 meters).

Sources of resistance to maize dwarf mosaic virus were also identified in sorghum. Resistant lines can be grown in areas where the virus and vectors are endemic without significant economic losses.

An illustrated text, "Diseases of Sorghum in West Africa," was published in August 1984. This should increase the efficiency of sorghum disease identification and lead to better disease control. (MSU-6)

About 100 selections of pearl millet from the world collection were tested for their reaction to two common strains of maize dwarf mosaic virus. No previous work of this type or any other reactions of millet to viruses had been reported. There is good general resistance to the strains tested but some specific examples of susceptibility were found which suggests that breeding material should be tested against the local virus strains before being carried too far. (NU-10)

Nine sorghum isolates of the sorghum anthracnose organism from different geographical locations in the United States were tested for their ability to attack 12 different varieties of sorghum. These sorghum lines were reported previously to have varying levels of resistance to an isolate of fungus from Indiana. The sorghum plants were rated for disease responses and the fungal isolates separated into five physiological races. (PRF-6)

Collaborative research revealed that several sorghum cultivars are resistant to all known races of *Peronosclerospora sorghi*. These sources have been incorporated into breeding programs.

Tremendous variability exists for *C. graminicola*, the pathogen of anthracnose. Data from Brazil indicate that there are major differences among isolates from each of the sorghum growing regions. This means that selection for resistance must be done by location over a period of years, and attention must be paid to new approaches to managing pathogen populations and host resistance genes.

Three new germplasms that are virus resistant were released. Two of these were immune to MDMV-A and the third provided multiple resistance to MDMV-B and sugarcane mosaic virus strain H. This is the first sorghum

Previous Page Blank

germplasm ever to be released with multiple virus resistance and should extend virus disease control in sorghum. (TAM-24)

South Texas nurseries continued to provide agronomic, disease and insect information relevant to sorghum production around the world. An evaluation of sorghum and millet diseases in Botswana and Zimbabwe was conducted in April 1985. This information is being used to determine potential areas of cooperative disease research where our expertise may be utilized to develop and assist research programs in Southern Africa.(TAM-27)

Sorghum Disease Resistance Evaluation and Pathogenicity Investigations

Project MSU-6

Larry E. Trevathan, Natale Zummo and R.A. Frederikson

Mississippi State University

Host Country Collaborators

Tobias Ochor, Plant Pathologist

Mrs. Frances V. de Agudelo, Plant Pathologist

Dr. Lynn M. Gourley, Sorghum Breeder

Dr. John Clark, Sorghum Breeder

Dr. Robert Schaffert, Sorghum Breeder

Institutions

Collaborating Host Countries: Kenya; ICA, Colombia; CIAT, Colombia; USAID/Purdue, Niger; EMBRAPA, Brazil

U. S.: Mississippi State University, Texas A & M University, USDA/ARS

Linkages:

- Brazil: Sweet sorghum varieties developed at Meridian, MS are highly resistant to anthracnose and rust in the United States. When these varieties (Wray, Brandes, Dale, and MN 1500) are grown in Brazil they are completely susceptible to these diseases. Five hundred selected sweet sorghum lines from the world collection were sent to Dr. Robert Schaffert of EMBRAPA, where they were planted and screened for resistance to the strains of anthracnose, rust, and downy mildew endemic to Brazil. Sources of resistance to these diseases will be made available to sorghum breeders.
- Colombia: Studies were conducted on the relationship of soilborne pathogens to sorghum grown on highly productive and marginally productive soils both high and low in aluminum content.
- Dominican Republic: Resistance to foliar pathogens was sought for direct application to both the LDC and the United States.
- Niger: Researchability of sorghum and millet disease problems especially *Striga*, was determined.

Objectives, Research Procedures, and Production/Utilization Constraints

In recent years, grain crops have increased in importance in South America. Because of high production costs associated with other crops and the demonstrated resistance of sorghum to drought the crop has become more

important in countries such as Colombia and Brazil. In Colombia, sorghum [Sorghum bicolor (L.) Moench] was grown on 116,000 ha in 1983, a 3 % increase in total acreage planted to sorghum compared to 1982. Cultivation of grain sorghum in the Colombian Cauca Valley encompasses 20,000 ha with an average yield of 3.800 kg/ha. Grain sorghum produced in Colombia is used both for human consumption and animal feed, especially in small ruminant production.

Diseases caused by foliar and root pathogens are a primary concern in sorghum production in South America. Producers realize the limitation of tropical soils with high aluminum saturation. Knowledge of soilborne pathogens occurring on sorghum is important in assessing genotypes tolerant to high aluminum levels such as occur in the Llanos type soils. Development of sorghum genotypes adapted to soils high in aluminum may well depend upon the reaction of such genotypes to biological stress.

Previous investigations have associated soilborne pathogens with grain sorghum in Central and South America. However, the specific identification of soilborne plant pathogens, their occurrence, population dynamics, and relationship with edaphic factors of grain sorghum production must be determined. Certain aspects of the relationship of sorghum diseases to the occurrence of soilborne plant pathogens have been characterized in Colombian soils. Since soilborne pathogens recovered from roots and/or root zones of sorghum in those soils also occur on the crop in the United States, sources of resistance in the United States may be directly applicable to Colombia and Brazil. The recovery of similar soilborne pathogens from soils both low and high in aluminum suggests that resistance screening can be accomplished on soils low in aluminum.

The following objectives were proposed to characterize soilborne plant pathogens which constrain sorghum development both in LDC's and the United States. The chronological order of occurrence of predominant soilborne pathogens was determined in both the United States and Colombia, and the relation of these species to root system deterioration was evaluated. Additionally, assessment of the pathogenicity of these organisms, both alone and in combination, was made. To accomplish this objective, sorghum hybrids were planted at two locations in Colombia, one location in Brazil, and three locations in the United States. These sites were chosen based on a history of cropping to sorghum, as well as the neutral or acid nature of the soils

and their aluminum concentration. Identified pathogens were introduced into these plots on a controlled basis, and their relative contribution to root system deterioration was assessed by destructive sampling throughout the growing season. The role of Fusarium moniliforme received particular attention because of the high frequency and incidence with which it has been isolated from diseased sorghum root tissues in these countries. Comparative studies were conducted in the greenhouse under controlled conditions.

Once the specific role of certain pathogens was identified, sources of resistance were identified in cooperation with the sorghum breeders. Sources of resistance to single pathogens, as well as materials with tolerance to several predominant pathogens, were evaluated. Lines with disease resistance were then tested in the United States, Colombia, Brazil, and Kenya.

There are a number of pathogens causing diseases of foliage, stalks, and/or heads (grain) of sorghum (and/or millet). The primary controls for these diseases in the United States and other areas of the world, including Latin America and Africa, involve the development and use of resistant cultivars. Because Mississippi has an ideal environment for such studies sorghum lines with diverse germplasm were screened for resistance to anthracnose, rough spot, mosaic, zonate leaf spot, several bacterial diseases, and grain mold. Techniques for development, screening, and evaluation in Mississippi are directly applicable to LDC's. Sorghum varieties with good disease resistance were further tested at several locations in Kenya and Niger. The ISAVN Nursery was evaluated along with other sorghum lines for resistance to anthracnose and other leaf and stalk diseases in the United States, Latin America, Africa, and India.

The Fusarium disease complex, including stalk rot and head mold, was studied in documented problem soils at several locations and in these soils under greenhouse conditions. This disease complex occurs in Africa where it can and does kill sorghum and millet plants where drought stress precedes periods of high rainfall. Field symptoms have been duplicated in the greenhouse. Relation of developing sorghum panicles with associated fungi was investigated.

In cooperation with sorghum breeders at EMBRAPA, sorghum lines from the world collection were sent to Sete Lagoas, Brazil through quarantine. Lines with disease resistance in the United States were exposed to anthracnose,

rust, and downy mildew in Brazil. Varieties resistant in Brazil were further tested in Kenya.

Project Output

Research Findings

Sources of resistance to rough leaf spot disease (*Ascochyta sorghi*) were identified in sorghum.

Sources of resistance to maize dwarf mosaic virus were identified in sorghum.

An illustrated text, "Diseases of Sorghums in West Africa", was published in August 1984.

Races of the casual organisms of anthracnose (*Colletotrichum graminicola*), rust (*Puccinia purpurea*), and downy mildew (*Peronosclerospora sorghi*) different from those on sorghum in the United States have been identified in Brazil. Sources of resistance are being sought.

A three-month study of soilborne fungi and nematodes associated with sorghum in Colombia and Brazil by Mr. Jorge A. Cuarezma showed that of 18 nematode genera associated with sorghum roots, *Pratylenchus zeae* and *Helicotylenchus dihystera* occurred in greatest frequency and highest numbers. The fungi *Curvularia lunata* var. *aeria*, *Phoma macrostoma*, and *Fusarium moniliforme* were found in greatest frequency in both root and crown samples from soils low or high in aluminum, regardless of the presence or absence of root lesions.

Pratylenchus zeae and *Quinisulcius acutus* were the most common plant parasitic nematodes recovered from sorghum in Mississippi. A significant negative correlation occurred between *P. zeae* populations and soil pH and percent base saturation. A highly significant positive correlation occurred between *P. zeae* and total nematode populations. Correlations of soil phosphorus and potassium were both positive and highly significant in relation to population levels of *Q. acutus*.

Quinisulcius acutus was shown to be pathogenic to sorghum.

Concomitant populations of *Quinisulcius acutus* and *Pratylenchus zeae* resulted in reductions of sorghum growth.

Research Progress

Resistance to rough spot may be important where sorghum is to be grown in areas wetter than normal (rainfall above 1.5 meters).

Sorghum lines resistant to maize dwarf mosaic virus can be grown in areas where the virus and vectors are endemic without significant economic losses.

The text, "Diseases of Sorghum in West Africa", should increase the efficiency of sorghum disease identification and lead to better disease control.

Knowledge of the existence of races of the anthracnose, rust, and downy mildew pathogens in different areas permits better evaluation of sorghum line for resistance in an area. When a hybrid is introduced as resistant, disease reaction must be evaluated in relation to predominant races of pathogens present in the area.

Because of high production costs associated with other crops and the demonstrated resistance of sorghum to drought the crop has become more important in countries such as Colombia and Brazil. However, pathological problems are of primary concern, and producers realize the limitation of soils with high aluminum saturation. Knowledge of soilborne pathogens, such as nematodes and fungi, occurring on sorghum is important in assessing genotypes tolerant to high aluminum levels such as occur in the Llanos type soils. Success of this program will depend to a large extent on the reaction of such genotypes to other sources of biological stress. Since nematodes and fungi recovered from roots and/or root zones of sorghum in the area also occur on the crop in the United States, sources of resistance here may be directly applicable to Colombia and Brazil. The predominance of the same fungal species from soils low and high in aluminum may mean that resistance screening could be accomplished on soils low in aluminum with direct application to those containing higher concentrations.

Many sorghum plants in fields infested with *Pratylenchus zeae* and *Quinisulcius acutus* were reduced in growth. Previous studies have not reported the high incidence of concomitant populations of *P. zeae* and *Q. acutus*. Other investigators have reported that *Pratylenchus* spp. prefer acid soils, and *P. zeae* was negatively correlated with soil pH in this study. The high frequency of occurrence of *Q. acutus* where phosphorus and potassium levels were high suggests that these elements may favor increased population densities. The widespread and frequent occurrence of *P. zeae* and *Q. acutus* in Mississippi sorghum fields suggests that these nematodes are involved in sorghum root disorders.

The observation of Quinisulcius acutus feeding on sorghum roots in vitro and the reduction of sorghum root and shoot growth following inoculation in an initially sterile growth medium in the greenhouse demonstrates that this nematode is a pathogen on sorghum. The increased populations within a short period of time suggest that sorghum is also a good reproductive host for Q. acutus.

Quinisulcius acutus and Pratylenchus zeae, alone or in combination, were pathogenic to sorghum under greenhouse conditions. When expressed on a unit root weight basis, the final population density of each species was the same in the coincident infection as in the respective monospecific treatments. When initial population size was considered, the reproductive factor indicates that P. zeae reached a higher population level than did Q. acutus. There are no previous reports of effects on sorghum of Q. acutus combined with other nematodes.

Travel

- September 1984. L.E. Trevathan, College Station, Texas, INTSORMIL Triennial Review
- August 1984. L.E. Trevathan, Guelph, Ontario, Int. Congress of Nematology
- August 1984. L.E. Trevathan, Guelph, Ontario, Am. Phytopath. Society,
- September 1984. N. Zummo, Niger, Sorghum/Millet Workshop
- September 1984. N. Zummo, College Station, Texas, INTSORMIL Triennial Review

Publications and Presentations

Cuarezma-Teran, J.A., L.E. Trevathan, and S.C. Bost. 1984. Nematodes associated with sorghum in Mississippi. Plant Disease 68:1083-1085.

Cuarezma-Teran, J.A., and L.E. Trevathan. 1985. Effects of Quinisulcius acutus and Pratylenchus zeae alone and in combination on sorghum. Journal of Nematology 17:169-174.

Trevathan, L.E., and J.A. Cuarezma-Teran. 1985. Relationship of plant-parasitic nematodes and edaphic factors in Colombian grain sorghum production. Nematropica (accepted for publication).

Trevathan, L.E., and J.A. Cuarezma-Teran. 1984. Effects of Quinisulcius acutus and Pratylenchus zeae alone and in combination on grain sorghum. First International Congress of Nematology. Guelph, Ontario.

Trevathan, L.E., J.A. Cuarezma- Teran, and L.M. Gourley. 1984. Soilborne fungi associated with sorghum in tropical aluminum soils in Colombia. Phytopathology 74:853 (Abstr.)

Zummo, N., and D.M. Broadhead. 1984. Sources of resistance to rough leaf spot disease in sweet sorghum. Plant Disease 68:1048-1049.

Zummo, N., 1984. Diseases of pearl millet: An assessment in consideration of growing the crop in Mississippi. Journal of the Miss. Academy of Sciences 29:129-131.

Zummo, N., 1984. Sorghum diseases in West Africa: An illustrated text. USAID, Washington, D.C. 32 pp.

Cuarezma-Teran, J.A., and L.E. Trevathan. 1984. Response of grain sorghum to the ectoparasitic nematode, Ouinisulcius acutus. First International Congress of Nematology. Guelph, Ontario.

Cuarezma-Teran, J.A., L.E. Trevathan, L.M. Gourley, and F.V. Agudelo. 1984. Correlations of plant-parasitic nematodes and edaphic factors associated with grain sorghum in the Cauca Valley, Colombia. First International Congress of Nematology. Guelph, Ontario.

Identification of Genes Controlling the Reaction of Sorghum to Maize Dwarf Mosaic Virus (MDMV)

Project NU-10

S.G. Jensen

University of Nebraska

Other Researchers

Manuel Palomar, Philippines - Visayas State College of Agriculture

Cecira de Martinez, Colombia - Graduate Student

Summary

The major accomplishments for Year 6 can be summarized as follows: Maize dwarf mosaic virus (MDMV) is more complex in itself and in its relationship to its host plants than we had suspected.

In doing a genetic analysis of the reaction of several sorghum lines to two strains of the virus it became apparent that the reaction of the host lines was different for each strain. There were seven different reactions or symptoms that were identified and each had different genes controlling them. One of these was the ease of infecting a particular sorghum line with a particular strain of the virus. Certain lines were better than others at imparting that type of resistance to their progeny. Another property was the amount of virus that was produced in an infected host. Here again differences were found between genotypes. This may be another, and unique, method of seeking resistance.

We also learned that strains of the virus were not as clear cut as had been published. Certainly host range and symptom reactions were consistent for the strains as had been reported, but when we looked at the proteins that were synthesized in an infected cell from the virus nucleic acid we found considerable variation among the members of the same strain.

Perfecting the quantitative analysis techniques for using the enzyme-linked immunosorbent assay, named for short, ELISA has given us for the first time a rapid and accurate method of determining how much virus is in a plant or in a purified preparation of virus. The method was used to measure how much virus was different in parts of the plant, different genetic lines, different alternate hosts, in different environmental conditions, and finally at each stage of the purification technique. Many other options for research are possible now that a highly accurate one-day test is possible.

Using the above techniques we have shown that the accepted explanations for the presence of different strains of MDMV in parts of the country are not valid. It had been assumed that Strain A was in the south because it occurred in johnsongrass which grows only in the south and Strain B in the north because there were better hosts for B in the north. It turns out that all grass hosts tested in the north are better for Strain A and thus Strain A should dominate in both areas. It does not.

Institutions

Collaborating Host Countries: Philippines and Colombia

U.S.: University of Nebraska, Lincoln, Nebraska, Department of Plant Pathology

Linkages:

- Philippines: For over two years we have had exchange visitations with scientists from this country. Dr. Palomar has been here on sabbatical and two to four other visiting scientists have gone through each year. We have been hoping to develop a broad relationship with the country, including a joint research effort and training programs. In view of cuts in INTSORMIL funding to the Philippines other sources of funding are being sought.
- Colombia: Ms. de Martinez has returned to the Llanos region of Colombia to work on her Ph.D. thesis. We expect exchange visitations while the work is in progress. An attempt is being made to develop expanded funding for the study of mycorrhizae in acid soils by securing additional funding from USAID.
  This effort is being directed through ICA.

Ecogeographic Zones Most Benefited by Research

The research on virus diseases would most benefit Central America where MDMV in various strains is well known and causes significant damage. Recent reports that viruses are becoming a problem in Africa suggest that this area could also benefit from an understanding of the interaction between the virus strains and the host genome.

The mycorrhizal research on sorghum grown in acid soils is directed primarily at the acid soils region of South America but the findings, or at least the technology should be transferable to similar acid soils regions of Africa.

Objectives, Research Procedures, and Production/Utilization Constraints

This project was terminated July 1, 1985. Funding for completion of the training of the graduate student and completion of the sabbatical is projected.

Project Output

Approximately 100 selections of pearl millet from the world collection were tested for their reaction to two common strains of maize dwarf mosaic virus. No previous work of this type or any other reactions of millet to viruses had been reported. There is good general resistance to the strains tested but some specific examples of susceptibility were found which suggests that breeding material should be tested against the local virus strains before being carried too far. Genotypes of grain sorghum were found which differed in their susceptibility to infection and in the virus titer in the tissue. This information could be used as a basis for a breeding program. Susceptibility to infection can be tested in even the most primitive research settings. Measure of virus titer would require more sophisticated equipment. Data were accumulated on the influence of temperature, light, and other environmental factors on virus titer in sorghum. The virus titer was also followed over time and in various tissues so the pattern of MDMV replication and accumulation in sorghum is now well known for two strains of the virus. Methods of virus purification can be rapidly tested and optimized using the quantitative enzyme-linked immunosorbent assay which we have developed. This would be very useful for any virus for which an antiserum can be developed.

Theories of MDMV epidemiology are based on the movement of the virus from native grass virus reservoirs into crops such as corn or sorghum. Our measurements of the susceptibility to infection, virus titer and prevalence in nature suggest that the theories may be incomplete at best and completely wrong at worst. Our work on the genetics of the virus through the analysis of the virus genome-directed proteins suggest that there is even greater diversity in virus strains than had been suspected through host range symptom expression and more traditional methods of assessment. This may mean that there is less likelihood of success in a breeding program if strain specific resistance is the approach.

Because this project is being terminated there will be no continuing development in the research. However, the work will continue to be summarized and submitted for publication.

Networking Activities

- No activity with workshops in the last year but I participated in a plant disease workshop in Mexico several years ago and took a group of foreign students on a sorghum field/lab tour to Texas in June of 1984.
- Dr. Manuel Palomar (Philippines) participated in research investigator exchange. Several short term visitors have been through our laboratory.
- For germplasm exchange, I received about 100 lines of millet and tested them for their reaction to MDMV.
- Dr. Palomar, during his stay at the University of Nebraska has been continually assisted by the use of the laboratory and departmental equipment.

Travel

- M. Palomar to APS meetings in Guelph, Ontario.
- Jensen to Texas A&M University, INTSORMIL program review.
- Jensen to Lubbock to SICNA and INTSORMIL meeting.

Publications and Presentations

Abid, H.S., 1984. Starch gel electrophoretic classification of biotypes and field populations of greenbugs, Schizaphis graminum M.S. thesis, University of Nebraska (thesis co-advised by Dr. Kindler and Dr. Jensen).

Abid, H.S., S.D. Kindler, S.G. Jensen, M.A. Thomas-Compton and S.M. Spomer. 1985. Isozyme characterization of sorghum aphid species and biotypes. sorghum Newsletter. 28:(submitted).

Ogbonnaya, C.A. 1985. Influence of biotype E greenbugs on biochemical properties of sorghum. J.S. thesis, University of Nebraska (thesis co-advised by Dr. Kindler and Dr. Jensen).

Jensen, S.G., and L. Seip. 1984. Proteins in maize dwarf mosaic virus infected sorghum. Sorghum Newsletter. 27:122.

Jensen, S.G., M.K. Palomar, E.M. Ball and R. Samson. 1985. Factors influencing the virus titer in maize dwarf mosaic virus infected sorghum. Phytopathology 75:(in press).

Jensen, S.G., N. Van pelt and M.K. Palomar. 1985. The interaction of host and virus strain on the stability of inclusions of maize dwarf mosaic virus. Phytopathology 75:(in press).

Palomar, M.K., S.G. Jensen and E.M. Ball. 1984. Maize dwarf mosaic virus (MDMV) titer in sorghum tissue. Phytopathology 74:(in press).

Palomar, M.K., and S.G. Jensen. 1985. The use of enzyme-linked immunosorbent assay to assess the purification of maize dwarf mosaic virus. Phytopathology 75:(in press).

Palomar, M.K., S.G. Jensen and E.M. Ball. 1984. The concentration of maize dwarf virus in sorghum. Sorghum Newsletter. 27:123.

Palomar, M.K., and S.G. Jensen. 1985. Relative amounts of maize dwarf mosaic virus in several grasses. Sorghum Newsletter. Vol. 28:(submitted).

Palomar, M.K., and S.G. Jensen. 1985. Concentration and infectivity of maize dwarf mosaic virus in native great plains grasses. Phytopathology 75:965.

Changes in Year 7 Objectives

The program was terminated at the end of Year 6, and the only expenses will be the continued support of the graduate student and the sabbatical professor.

Studies on Mechanisms of Disease Resistance and Susceptibility and Screening for Improved Resistance to Fungal Pathogens with Emphasis on Anthracnose

Project PRF-6

Herman L. Warren (USDA)

Purdue University

Summary

This project is designed to strengthen sorghum disease research capabilities of collaborating scientists in LDCs through training graduate students in plant pathology. This will make linkages possible in countries where trained professionals are not presently readily available, and promote direct collaboration with scientists in host countries. The need to train students from the LDCs (supported by INTSORMIL funds) is a priority, with commitments made until the present students graduate. A graduate student (Mr. Mohammed Ali) is being trained in plant pathology at Purdue and will return to the Sudan to continue research in sorghum pathology.

Nine sorghum isolates of the sorghum anthracnose organism from different geographical locations in the USA were tested for their ability to attack 12 different varieties of sorghum. These sorghum lines were reported previously to have varying levels of resistance to an isolate of fungus from Indiana. The sorghum plants were rated for disease responses and the fungal isolates separated into five physiological races.

Institutions

Collaborating Host Countries: Brazil, Sudan, ICRISAT (India)

U.S.: Texas A&M University

Linkages:

- Established a uniform system of collection and assaying races of *Colletotrichum graminicola* on differentials of sorghum. Plans have been initiated to select uniform differential to use in race determination.

Objectives, Research Procedures, and Production/Utilization Constraints

Year 6 Objectives

1. To examine the inheritance of resistance to *C. graminicola*.
2. To determine genetic variation in fungal pathogens of sorghum.

3. To study the influence of seed and soil microflora on seedling emergence, vigor, disease development and yield.

4. To examine the influence of isolates of C. graminicola from several geographical areas on host reaction.

Research Procedures

The research on the influence of seed and soil microflora on seedling emergence, vigor, disease development and yield was initiated because of uneven population of sorghum observed in LDC's. Currently we are involved in assaying for prevalence of microorganisms, testing seed treatments and selecting varieties for vigor under adverse growing conditions. Results from screening procedures will be checked in fields with high inoculum potential. Cooperation with other colleagues at other institutions will be sought in this phase of the research.

Studies on methods of evaluating resistance to charcoal rot and assaying germplasm in the Sudan will be carried out. Germplasm will be obtained from various locations to test for resistance. Research will be initiated to determine the feasibility of using cultural practices to decrease the potential for infection by the pathogen.

Project Output

Research Findings

Discovered physiological races of Colletotrichum graminicola that attack sorghum. This knowledge led to the establishment of a set of differentials that can be used to identify races of the pathogen and further enhance breeding programs.

Research Progress Available In One to Three Years

Recommendation of chemicals for seed treatment that control seedling blight. Identification and incorporation of resistant genes for control of C. graminicola.

Publication

Ali, M.E.K., and H.L. Warren. 1984. Variation in pathogenicity within sorghum isolates of Colletotrichum graminicola. Phytopathology 74:883.

Changes in Year 7 Objectives

Project terminated effective June 30, 1985.

Sorghum and Millet Disease Control, Disease Resistance, Host-Parasite Biology, and Diagnosis

Project TAM-24

R.A. Frederiksen, J. Craig, and R.W. Toler

Texas A&M University

Host Country Collaborating Investigators

Omer Hilu, ARC - Wad Medani, Sudan

George Wall, Texas A&M Graduate Student, Honduras

Dan Meckenstock, INTSORMIL, Honduras

A. S. Ferreira, EMBRAPA, Sete Lagoas, Brazil

Fernando Fernandes, EMBRAPA, Sete Lagoas, Brazil

Carlos Casela, EMBRAPA, Sete Lagoas, Brazil

Nely Brancao, EMBRAPA, Pelotas, Brazil

M.N. Pawar, Texas A&M University Graduate Student, India

S. Dalmacia, Plant Breeding Institute, Los Banos, Philippines

Baikabile Motalaote, Texas A&M Graduate Student, Botswana

Mamourou Diorte, Texas A&M Graduate Stduent, Mali

Jesus Narro S., INIA, Celaya, Mexico

Jose Sifuentes, Texas A&M Graduate Student, Mexico

H.A. Mena, CENIAP, Maracay, Venezuela

Edwardo Teyssandier, Plant Pathologist, Buenos Aires, Argentina

Jose Louis Scantamburlo, INIA - Manfredi, Argentina

Laura Giorda, Texas A&M Graduate Student, Argentina

Other Researchers

D. Rosenow, Texas A&M University, Lubbock, Texas

G. Odvody, Texas A&M University, Corpus Christi, Texas

L. Rooney, Texas A&M University, College Station, Texas

F. Miller, Texas A&M University, College Station, Texas

J. Craig, Texas A&M University, College Station, Texas

L. Claflin, Kansas State University, Manhattan, Kansas

R. Duncan, University of Georgia, Disease Evaluation

M. Bonde, University of Maryland

L. Mughogho, ICRISAT, India

P. Esele, Uganda

Institutions

Collaborating Host Countries: Sudan, ARC; Honduras, Recursos Naturales; Brazil, EMBRAPA; Mexico, INTA

U.S.: USDA

Linkages:

Currently, we have a formal linkage in Sudan where we are addressing problems related to long smut and charcoal rot. We are actively collaborating in Brazil on the evaluation of anthracnose resistance in sorghum. The program in Honduras is being summarized as part of Mr. G. Wall's dissertation and it provides an excellent framework for defining research direction and the role of intercropping. Linkages exist in Mexico, Argentina, Venezuela, and Colombia for pathogen identification. We are presently looking at expanding our programs in eastern Africa through the development of a formal linkage with SAFGRAD. We continue to cooperate with ICRISAT.

Ecogeographic Zones Most Benefited by Research

East Africa, South America - Central America

Objectives, Research Procedures, and Production/Utilization Constraints

Sorghum/Millet Constraints

Diseases of sorghum and millet

Project Objectives

1. Identify, catalogue, and evaluate sources or disease resistance in sorghum and millet.

2. Develop effective screening techniques for detection and incorporation by breeding of superior plant resistance levels.

3. Study disease etiology or factors associated with the cause of plant disease.

4. Explore the use of cultural, chemical, and biological control measures as an adjunct to control by disease resistance.

5. Collect and evaluate populations of plant viruses for their range or changes in virulence to develop disease diagnostic systems.

6. Determine mechanisms of disease resistance.

Changes in Objectives from Previous Year

Domestic:

1. Identify sources of resistance to disease.

2. Assist in the incorporation of multiple sources of resistance to disease.

3. Determine inheritance of resistance.

4. Improve disease screening methods.

5. Complete biology of disease where needed.

6. Organize, maintain, and distribute (with TAM-21 and TAM-22) the international sorghum disease and pathogen identification nurseries.

7. Produce anciserum to sorghum sudan grass and millet viruses for underdeveloped countries.

8. Determine amino acid (AA) peptide maps, and AA sequences of maize dwarf mosaic virus strains to determine their relationships and pathogenicities.

9. Organize and maintain international sorghum virus nursery for world-wide distribution.

10. Study the effects of MDMV-O on grain sorghum growth and development.

11. Identify and isolate resistance to MDMV-A and MDMV-B in sudangrass.

12. Identify, catalog, and evaluate sources of resistance to the different viruses, strains and biotypes of viruses that infect sorghum.

13. Develop and release new virus resistant sorghum germplasm and inbreds.

Sudan

1. Charcoal rot
   a. Describe the best growing conditions to minimize incidence of disease.
   b. Identify sources of resistance.
2. Long smut
   a. Identify sources of resistance.
   b. Identify plant traits leading to disease escape.
   c. Study survival of the pathogen.
   d. Evaluate the role of wild sorghum in pathogen survival.

e. Assess economic importance of disease in rain fed production areas.

3. Anthracnose

a. Identify resistant genotypes.

b. Evaluate elite genotypes in Sudanese breeding programs for disease reaction.

c. Characterize pathogen population.

Honduras

1. Survey sorghum production areas for distribution and severity of diseases.
2. Evaluate disease losses and rank importance of disease.
3. Compare disease development in traditional and introduced sorghum growing methods.
4. Establish a regional disease nursery program.
5. Develop or assist in developing methodologies for breeding for disease resistance in Honduras.

Brazil

1. Characterize pathogen populations of Peronosclerospora sorghi and Colletotrichum graminicola as to specific race groups.

2. Evaluate new methods of selecting for stable sources of resistance to anthracnose.

3. Collaborate in developing anthracnose/head blight resistant populations. (Texas, Georgia, Mexico, Brazil, and Puerto Rico)

4. Initiate studies on biocontrol of sorghum downy mildew.

Mexico

1. Define races of various pathogens including strains of virus present in sorghum growing regions of Mexico using the International Sorghum Virus Nursery (ISVN) and the Antisera Bank.

2. Collaborate in development of head blight resistant sorghum populations.

3. Determine the inheritance of resistance to sorghum downy mildew.

India

1. Study of virulence patterns of the sorghum downy mildew pathogen from Africa, Asia, South and North America.

Philippines

1. Identify and evaluate sources of resistance to foliar diseases.

Botswana

1. A graduate research program to study survival of nematodes Pratylenchus spp. and their damage to sorghum roots.

Mali

1. A graduate program to determine factors affecting sorghum root infection by Macrophomina phaseolina and to determine levels of host reaction to root infection.

Venezuela

1. Evaluation of sorghum virus strains using both the ISVN and the Antisera Bank.

2. Culture of several advanced sorghum disease nurseries for host reactions and estimates of pathogen variability.

Research Procedures

1. A major component of this program is to develop a uniform method of describing races or varieties of pathogens that are important in the development of host resistant sorghum cultivars. It is particularly important that these descriptions be acceptable to all workers. Currently, there are four such nurseries distributed internationally: uniform head smut, sorghum downy mildew virulence, sorghum anthracnose virulence, and sorghum virus. Our plan of work will encourage the distribution of these nurseries to locations where these diseases are present and host resistance breeding is a component in the sorghum improvement program. Furthermore, instructions and procedures for these uses are being revised.

2. Host plant resistance work is done in cooperation with TAM-21, TAM-22, and TAM-23. Major disease nurseries are located at Orange Grove, head smut, downy mildew (pathotype 3); La Ward, downy mildew, gray leaf spot; Beeville-Berclair, downy mildew (pathotype 1), zonate leaf spot, grain mold, sheath blights, smut; College Station, anthracnose, downy mildew, head smut, grain mold, bacterial (read) stripe, and acremonium wilt; Lubbock and Halfway, Texas, charcoal rot, rust, and maize dwarf mosaic. On these nurseries thousands of elite, breeding, exotic, and partially converted sorghums as well as commercial cultivars are evaluated for their level or

degree of multiple disease resistance. It is in these nurseries that evaluations are made for attempts to combine disease, insect, and stress resistances in productive cultivars. Advanced lines are tested cooperatively with LDC scientists.

3. Utilization of local lesions techniques will permit studies on the inheritance of resistance to pathotypes 1 and 3 of Peronosclerospora sorghi. The current hypothesis suggests that resistance is dominant and simply inherited. Techniques permitting the evaluation of resistance to oosporic inoculum under field conditions with those using local lesions should be helpful in combining desirable genes for resistance. This methodology has a high acceptance value as a technique wherever sorghum downy mildew is controlled by host resistance.

4. Sorghum virus diseases are very important in both tropical and subtropical sorghum growing regions. A central problem in controlling these diseases has been the development of systems for virus identification, inoculation and host evaluation. During the coming year, seven specific studies are planned:

a. Evaluate amino acid sequences of capsid protein as a new approach to study the relationship of Maize Dwarf Mosaic Virus strains.

b. Identify, isolate, and study resistance in sudangrass to Maize Dwarf Mosaic Virus A and B.

c. Employ ELISA serological assay to measure virus concentration as a means of determining levels of resistance in sorghum.

d. Continue producing antisera for the sorghum virus antisera bank.

e. Study the effects of MDMV-O on grain sorghum growth and development.

f. Study the use of ELISA as a means of expanding serological assays to LDC's.

g. Identify, catalog, and evaluate sources of resistance to sorghum viruses and strains.

5. To determine differences between and among races of important plant pathogens, starch and polyacrylamide electrophoresis systems are being used to separate smut strains (races). Several enzymes have been identified. The system will be used with pathogen challenged and unchallenged host tissues to determine if specific host-parasite interaction proteins can be associated with virulence differences in the pathogen and/or reactions in the host. Similar techniques are being developed for the

identification of differences among isolates of the sorghum downy mildew pathogen. Samples from developing countries will be studied in the USDA Containment Laboratory, Frederick, Maryland. The central objective of these studies will be to use production of the host parasite interaction as a tool in selecting more desirable (durable) host resistance.

6. Sorghum downy mildew is a disease that lends itself to integrated control procedures. Such programs are particularly useful in LDC's where less expensive cultural controls are more important than chemical. The experiments planned for 1984-1985 are in three categories. The first involves greenhouse and temperature tank experiments. The influence of inoculum density and soil texture on oospore infection will be assessed. Secondly, the "infection potential" of several naturally infested fields will be determined using the "most probable number" method. Parameters influencing oospore infection and their ranges will be determined through field experiments using microloggers. Probable disease/yield loss relationships will be tested. The third category involves statistical analysis of the data from 1982-1984, and possible modeling of the pathogen development.

7. Seedling disease and stand establishment are major constraints in sorghum production, particularly in less developed countries. Currently, studies are under way to determine the relative significance of biotic factors (parasitic fungi) compared with abiotic factors (environmental) and to determine if these are useful genetic differences that would permit better stands under adverse conditions.

8. While progress has been made in identifying some sources of resistance to grain mold, little is known about the nature of resistance to this disease. Current research involves a detailed study of grain mold on three sorghum genotypes, SC170-6 (or derivatives), SC103, and Tx2536. The first one is resistant and has no subcoat. The second is resistant and has a subcoat. The last has no subcoat and is susceptible. Several experiments are being designed to determine why SC170 and SC103 are resistant. Colonization of the spikelets of all three lines will be studied in detail to determine how the lines differ. In all three lines an effort will be made to determine the importance of the growth stage of the plant (anthesis vs. pre and post-anthesis) in the severity of the disease.

9. Pathogenicity studies of Pratylenchus brachyurus and P. zeae on sorghum will be conducted under greenhouse conditions and in microplots. Sorghum seedlings will be inoculated with various levels of inoculum densities and the effect of nematode population density on growth of sorghum will be determined. The following parameters will be measured at the end of the tests: plant height, shoot dry weight, root wet weight, nematodes per gram of roots and per gram of soil. Grain yield of sorghum will be measured in the microplot experiment. All the data will be analyzed using ANOVA and regression analysis. Field samples will be collected from sorghum rhizophere and these will be assayed for plant parasitic nematodes.

10. Progress is being made in the development of a comprehensive book on sorghum diseases. This is a joint project of several workers from INTSORMIL, ICRISAT, and LDC's. Also, a manual of techniques for working with sorghum pathogens is being prepared.

11. A sorghum population improvement is continuing in a joint program with workers in Mexico, Puerto Rico, and Georgia for increased levels of resistance to Fusarium head blight, grain mold, and anthracnose.

Problems Regarding Achievement of Objectives

Much more effort is needed. There are far too few properly trained researchers and the types of research that needs to be done in East Africa and parts of Central America is not getting done. Work is needed to better understand the problems (constraints) of traditional farmers and the ways in which they might improve their production. More of our effort needs to be focused on the type of programs we conducted in Honduras; it is particularly needed in East Africa. We are well prepared to meet the needs of mechanized agriculture in Central, South America and Asia.

Project Output

Research Findings

1. Several sorghum cultivars are resistant to all known races of Peronosclerospora sorghi. These sources have been incorporated into breeding programs. The list was published and presented at the North American Sorghum Workers Conference and at the American Phytopathology meetings.

2. Resistance to sorghum downy mildew is dominant and specific to pathotype. Some sources are polygenic (QL-3 India). This means new sources

of resistance can be incorporated rapidly by traditional breeding using simple procedures developed in this program.

3. Downy mildew inoculum in soil is clustered. The cluster size is relatively small but varies from location to location. Using field nurseries in a breeding/screening program will require estimates of clump size in estimated levels of resistance to primary inoculum.

4. Tremendous variability in pathogenicity exists for Colletotrichum graminicola, the pathogen of anthracnose. Data from Brazil indicate that major differences exist among isolates from each of its sorghum growing regions. Also, large differences can be observed from a single location such as Experiment, Georgia. This means that selection for resistance must be done by location, over a period of years and attention must be paid to new approaches to managing pathogen populations and host resistance genes.

5. The herbicide safener, Concep II (Ciba-Geigy) predisposes sorghum to downy mildew, but the effects can be reversed by using the fungicide metalaxyl. These data warn us of possible interactions with pesticides and that they often provide protection against one problem but exaggerate another. This phenomenon is called "atrogenic effects". Similar problems have been noticed in pearl millet.

6. Both a technique for screening and sources of resistance to seedling disease were identified in grain sorghum. This research incorporates evaluations of biotic and abiotic factors affecting this disease. The knowledge of the interaction of these factors will permit superior results of resistant type in a breeding program.

7. The ISVN and ISAVN have contributed to specific virus identification in Mexico, Honduras, Venezuela, Tanzania, and Argentina and aided in comparison of strains in South Africa, Australia, and France.

8. The new strain of MDMV designated O in general produced less severe reactions to most of the sorghum differentials. It produced the same level of reaction as MDMV-A in PI35038, RTx7078, ATx623, xRTx430 and Tx2786. QL-11 and QL-3 were immune to strain O.

9. The identification of host resistance to brome mosaic virus, Venezuelan strain of MDMV, strain H of sugarcane mosaic virus and maize dwarf mosaic virus A have aided in the control of these virus diseases and reduction of economic losses.

10. Three mechanisms of resistance were identified to MDMV-A. These mechanisms provide multiple genetic sources of resistance to counter the variability of the pathogen.

11. Three new germplasms that are virus resistant were released. Two of these were immune to MDMV-A and the third provided multiple resistance to MDMV-A, MDMV-B and sugarcane mosaic virus strain H. This is the first sorghum germplasm ever to be released with multiple virus resistance and should extend virus disease control in sorghum.

12. The development of an immunoblot assay for maize mosaic virus provided a rapid and sensitive assay capable of detecting the virus at dilutions of MDMV-A--1:8192, MDMV-D--1:4096, MDMV-E--1:2048, and MDMV-F--1:8192. This allowed the comparison of strains, the analysis of different genotypes of sorghum, and quantification of the virus. The methodology was expanded for use in transblot analysis to allow the detection of virus in crude sap extracts and the determination of the molecular weight of the capsid protein. Johnsongrass samples from different locations across the state were screened to determine the variability of the natural pool of MDMV using this technique. Purified virus from each of the strains of MDMV were analyzed by PAGE to determine the molecular weights of the capsid protein.

13. Five bulks of pathotype-3 downy mildew resistant sorghum were released.

Research Progress

The examples listed above for immediate application will also be important over a period of years. Certain programs in progress are expected to generate important results:

1. Studies to determine the relation between stress tolerance and resistance to charcoal rot were positive. Selected glossy sorghums and Sudanese sorghums had superior resistance. Sorghum inoculated by the toothpick method was not superior for evaluating host resistance than it was by natural infection.

2. Long smut infection was evaluated using both spore forms of inoculum and various host maturities. In general, sporidial inoculum was superior to inoculum composed of teliospores and disease levels were more meaningful when inoculation took place at early boot. As expected, sorghum genotypes vary greatly in susceptibility to long smut. Several lines were identified as resistant. These included SC630-11E and QL-3 (India).

3. Sorghum diseases in Honduras were monitored in nineteen specific experiments. Sorghum downy mildew caused significant and linear yield reductions at Comayagua.

4. Acremonium wilt was present in both exotic and maicillo-criollo cultivars. The disease caused major reductions in yield for both types of cultivars. Affected plants yielded about 35 percent less than their healthy counterparts. For five other production parameters, the exotic sorghum BTx623 was significantly affected by all, the maicillo-criollos by only two.

5. Studies on the effects of intercropping as a method of reducing yields are not complete. However, regional programs including a Central American cooperative sorghum downy mildew nursery was established.

6. Populations of the sorghum head smut pathogen are being collected from all over the world (under permit). These isolates are being studied for methods of variability. To date, none of the electrophoretic methods have permitted differentiation among the smut isolates. The work is included because of the global importance of the disease and the slow rate of progress in improving levels of resistance in host populations. Host resistance is the only effective control for this disease.

7. Approaches are being made to determine if dilatory resistance can be used for controlling anthracnose. Dilatory resistance permits the survival of low levels of disease through reducing direct selection of virulent isolates but with minimal losses.

8. Distribution of disease nurseries:

Name	Number of Countries
The International Sorghum Virus Nursery	8
The International Cercospora Test	2
The International sorghum Anthracnose Virulence Nursery	3
The International Disease and Insect Nursery	3
The Sorghum Downy Mildew Virulence Nursery	1

9. Quarantine growouts:

Origin	Number of Entries	Reason
Philippines	19 sorghum	Bird resistance
India	71 I.S. sorghum	Grain mold
Kenya	26 (P.I.)	Grain mold
China	5 (P.I.)	Observation
ICRISAT	56 I.S. sorghum	Downy mildew resis.

Networking Activities

- Workshops - None 1984-85.
- Planning 1986 Panicle Diseases, ICRISAT.
- Planning 1988 Sorghum/Millet Conference in Africa.
- Germplasm supplied to Brazil, Honduras, and Somalia. Presented a paper on sorghum diseases in 1984 and in Uganda at the East African Sorghum/Millet Workers Conference in 1985.
- Data loggers were put in operation in Honduras by Mr. Collins.

Publications and Presentations

Publications

Toler, R.W., and P.H. Berger. 1984. Reaction of grain sorghum accessions to brome mosaic virus. Sorghum NL 26:122-123.

Alexander, J.D., R.W. Toler, and F.R. Miller. 1984. The effect of maize dwarf mosaic virus strain B on the growth and yield of susceptible grain sorghum. (Abstr.) Phytopathology 74:625.

Miller, F.R., and R.W. Toler. 1984. Registration of Tx2786 sorghum germplasm. Crop Sci. 24:1219.

Horne, C.W., R.W. Toler, R.A. Frederiksen, and J.D. Trampota. 1984. Ratings of commercial grain sorghum hybrids to the maize dwarf mosaic virus. Tx. Agr. Ext. Serv. Bul. B-1469, 4p.

Langham, M.A., R.W. Toler, J.D. Alexander, and F.R. Miller. 1984. Reaction of sorghum accessions under natural infection by yellow sorghum stunt mycoplasm. Sorghum NL 27:126-128.

Vann, S.R., R.W. Toler, and F.R. Miller. 1984. Reaction of sudangrass accessions to mechanical inoculations with maize dwarf mosaic virus - strain A. Sorghum NL 27:124.

Alexander, J.D., R.W. Toler, and F.R. Miller. 1984. Effects of maize dwarf mosaic virus strain B infection on growth and yield of susceptible sorghum. Sorghum NL 27: 124-126.

Vann, S.R., R.W. Toler, and F.R. Miller. 1984. Reactions of sudangrass accessions to strain A of maize dwarf mosaic virus. (Abstr.) Phytopathology 74:795.

Langham, M.A., R.W. Toler, J.D. Alexander, and F.R. Miller. 1984. Evaluation of Sorghum bicolor (L.) Moench accessions under natural infection with yellow sorghum stunt. (Abstr.) Phytopathology 74:868.

Alexander, J.D., R.W. Toler, and L. Giorda. 1984. Correlation of yield reductions with severities of disease symptoms in grain sorghum [orghum bicolor (L.) Moench] infected with sugarcane mosaic or maize dwarf mosaic viruses. (Abstr.) Phytophathology 74:794-795.

Alexander, J.D., R.W. Toler, and F.R. Miller. 1984. The effect of maize dwarf mosaic virus strain B on the growth and yield of susceptible grain sorghum. (Abstr.) Phytopathology 75:625.

Wall, G.C., R.A. Frederiksen, and R. Nolasco. 1984. Effecto de la marchitez por acremonium sobre maicillo criollo y sorgo mejorado en Honduras. in Memoria Tecnica Anual 1983 Programa Nacional de Sorgo y Programa Nacional de Frijol. pp 54-57 ED. Ing. Gerardo Antonio Reyes W. Jeffe Depto. Investigation Agricola. Tegucigalpa, D.C. Honduras. C.A. 184 pp.

Nolasco, R., J.B. Guevara, and G.C. Wall. 1984. Comportamiento de hibridos comerciales. Loc. Cit. pp. 14-19.

Wall, G.C., and R. Nolasco. 1984. Identificacion de Enfermedades de sorgo en Honduras. Loc. Cit. pp. 45-48.

Wall, G.C., D.H. Meckenstock, and R. Nolasco. 1984. Identificacion de patotipo de cenicilla en Comayaqua, Honduras. Loc. Cit. pp. 49-53.

Gimenes-Fernandes, N., R.A. Frederiksen, and A.M. Pena. 1984. Avaliacao da resistancia ao mildio [Peronosclerospora sorghi (Weston & Uppal) G.G. Shaw] atraves da leit ura das lesoes foliares locais. Phytopathologica 10:(no 3, 4) 189-205.

Odvody, G.N., and R.A. Frederiksen. 1984. Use of systemic fungicide metalaxyl and fosetyl-A for control of sorghum downy mildew in corn and sorghum in South Texas. I. Seed treatment. Plant Dis. 68:604-607.

Odvody, G.N., and R.A. Frederiksen. 1984. Use of systemic fungicide metalaxyl and fosetyl-A for control of sorghum downy mildew in corn and sorghum in South Texas. II. Foliar application. Plant Dis. 68:608-609.

Harris, M.K., and R.A. Frederiksen. 1984. Concepts and methods regarding host plant resistance to arthropods and pathogens. Ann. Rev. Phytopathol. 22:247-272.

Frederiksen, R.A., D.T. Rosenow, D. Collins, and J. Craig. 1985. Registration of six bulks of downy mildew resistant sorghum germplasm. Crop Sci. 25:

Presentations

Frederiksen, R.A. 1984. Sorghum Diseases: Their potential for control. At Asociation Colombiana de Fitopatologia y Ciencias Ofines. May 30-June 2, 1984. Santa Marta, Colombia. Similar lectures were given to sorghum growers and seed producers at Palmira, Cartago, Nataima, and Valledupar.

Frederiksen, R.A. 1985. Foliar Diseases of Sorghum. Fourth Annual East African Sorghum and Millet Workshop, Soroti, Uganda, July 26.

Papers presented at the 14th Biennial Grain Sorghum Research and Utilization Conference. Lubbock, Texas. February 17-20, 1985.

Forbes, G.A., and R.A. Frederiksen. The role of soil temperature and soil moisture in stand establishment of sorghum.

Collins, D., D. Pietsch, R.A. Frederiksen, and G. Walker. Evaluation of the disease testing program for commercial hybrids.

Schuh, W., and R.A. Frederiksen. Distribution of sorghum downy mildew in the field and its implications for breeding for resistance.

Sifuentes, J., R.A. Frederiksen, and J. Craig. Inheritance of sorghum downy mildew local lesion reaction in sorghum.

Pawar, M.N., R.A. Frederiksen, L.K. Mughogho, D.T. Rosenow, and M.P. Bonde. Survey of virulence in Peronosclerospora sorghi isolates from India, Nigeria, Ethiopia, Argentina, Brazil, Honduras and the United States.

Rosenow, D.T., and R.A. Frederiksen. Inheritance patterns in new sorghums resistant to pathotype 3 sorghum downy mildew.

Craig, J., and R.A. Frederiksen. Effect of seed safeners on incidence of sorghum downy mildew.

Wall, G.C. Sorghum disease research in Honduras.

Forbes, G., and R.A. Frederiksen. 1984. Investigaciones de Enfermedades de Sorgo en la Universidad de Texas A&M. First National Sorghum Meeting, Nuevo Leon, Mexico.

Sifuentes, J., and R.A. Frederiksen. 1984. Inheritance of resistance to sorghum downy mildew in sorghum. First National Sorghum Meeting, Nuevo Leon, Mexico.

Integrated Control of Sorghum Disease and Development of South Texas Sorghum Nursery Programs

Project TAM-27

Gary N. Odvody

Texas A&M University

Other Researchers

J.B. Mott, Texas A&M University, TAM-27

R.A. Frederiksen, Texas A&M University, TAM-24

J. Craig, Texas A&M University, TAM-24

R.W. Toler, Texas A&M University, TAM-24

D.T. Rosenow, Texas A&M University, TAM-22

L.E. Clark, Texas A&M University, TAM-22

F.R. Miller, Texas A&M University, TAM-21

G.L. Teetes, Texas A&M University, TAM-25

G.C. Peterson, Texas A&M University, TAM-23

L.W. Rooney, TexasA&M University, TAM-26

L.V. Withee, Kansas State University, KSU-7

M.D. Clegg, University of Nebraska, NU-13

R.L. Vanderlip, Kansas State University, KSU-6

D. Andrews, University of Nebraska, NU-15

B. Motalaote, Plant Pathologist, Sebele Experiment Station (GOB) Botswana

D.Carter, Botswana, KSU-7

W. Youngquist, Botswana, KSU-7

L. House, Bulawayo, Zimbabwe, (SADCC/ICRISAT Regional Project)

J. Mushonga, Sorghum Breeder, Crop Breeding Institute, Causeway, Zimbabwe (cooperative through SADCC/ICRISAT Regional Project)

F.Muza, Millet Breeder, Crop Breeding Institute, Causeway, Zimbabwe (cooperative through SADCC/ICRISAT Regional Project)

Summary

During the year there was a transition from TAM-27 objectives to those of TAM-28. South Texas nurseries continued to provide agronomic, disease, and insect information relevant to sorghum production around the world. An evaluation of sorghum and millet diseases in Botswana and Zimbabwe was conducted by the principal investigator in April of 1985. In deliberations with LDC researchers, this information is being used to determine potential

areas of cooperative disease research where our expertise may be utilized to develop and assist research programs in southern Africa. Some potential cooperative research areas include:

1. Use of seed treatment fungicides as research tools to assess the role of pathogens in stand establishment problems of sorghum and millet.

2. Establishment of disease increase nurseries to provide high, uniform pathogen inoculum for best evaluation of germplasm response and characterization of pathogens present.

3. Use of soil propagule isolation technique to identify, quantitate, and evaluate plant pathogens at specific locations and to search for naturally occurring biological control organisms.

Institutions

Collaborating Host Countries: Botswana and Zimbabwe

U.S.: Texas A&M University, Kansas State University and

Texas A&M University, Kansas State University, and University of Nebraska.

Ecogeographic Zones Most Benefited by Research

Southern Africa and Eastern Africa in transition to TAM-28

Objectives, Research Procedures, and Production/Utilization Constraints

Year 6 Objectives

TAM-27

1. Develop and implement integrated control methods (cultural, chemical, biological) to complement and conserve host plant resistance.

2. Utilize existing south Texas sorghum nurseries to provide disease, insect, and agronomic information relevant to LDC's.

TAM-28

The decision to terminate TAM-27 during its first year plus the approval of TAM-28 necessitated some redistribution of efforts and funds of TAM-27 to pursue TAM-28 objectives.

1. Identify major disease constraints of millet and sorghum in southern Africa (Botswana).

2. Develop integrated disease control systems including cultural and biological controls to complement host plant resistance.

3. Determine major pathogenic and environmental factors responsible for poor stand establishment in millet.

4. Determine effects of present cropping systems on disease and nematode incidence and severity in sorghum and millet and propose feasible control solutions.

Project Output

South Texas Sorghum Nurseries: Through cooperation with other TAM/INTSORMIL projects, this project has participated in evaluating germplasm from around the world for agronomic, disease, and insect response at five south Texas locations. The climate and prevalent disease and insect problems in these nurseries enable consistent production of information useful in selecting advanced materials for evaluation in specific LDC locations and environments.

Seed Treatment with Systemic Fungicides: Seed of sorghum was treated with systemic fungicides having specific or general activity against soilborne pathogens. The fungicides active against *Pythium* demonstrated no advantage over the control (Captan only) in establishment of sorghum seedlings during the present growing season in the south Texas area. The lack of seed treatment response to compounds like metalaxyl that are known to be active against *Pythium* in sorghum indicate a lack of *Pythium* involvement in stand establishment this year. These compounds and others with different fungicidal activities will be utilized in the LDC's to determine the role of *Pythium* and other pathogens in seedling establishment problems of sorghum and millet.

Phytotoxicity of several fungicides applied as seed treatments were evaluated in the field on a pearl millet hybrid and line. No phytotoxicity was noted at the rates tested on sorghum and millet. Metalaxyl (Apron), fosetyl-AL (Aliette), and cyprofuram (Vinicur) fungicides provided seed treatment control of systemic sorghum downy mildew (SDM) caused by *Peronosclerospora sorghi*. In LDC locations where SDM control is desirable the differing chemistry of these fungicides could provide a stability of control because one fungicide or similar fungicide chemistry represents a system more vulnerable to fungicide-tolerant strains of the pathogen. No systemic fungicide has yet provided control of head smut when used as a seed or foliar treatment.

Biocontrol: Unlike previous results, seed treatment with a *Bacillus* sp. did not increase sorghum stands when compared to Captan-treated

controls. These results may be due in part to an early season environment unfavorable to root pathogens (Pythium). Microplot field studies with a chytrid fungus parasitic to oospores of P. sorghi were inconclusive and demonstrated a need to initially assess inoculum reduction under more controlled conditions.

Charcoal Rot: Through use of a soil-mediated infection technique several isolates of Macrophomina phaseolina from diverse hosts were evaluated for their pathogenicity and virulence against sorghum. Isolates from cantaloupe, cotton, soybean, sunflower, sesame, sorghum, and corn had specific pycnidial characters that were used as markers to determine identity of each isolate. Isolates were made from charcoal rot affected stalks or root tissue to determine if inoculum used to infest the soil was consistent with that obtained from the plants. Initial evaluation of stalk isolates indicated that all isolates from these diverse hosts except soybean were pathogenic to sorghum. The lack of activity of the soybean isolate is most likely due to loss of virulence in culture. The cross-pathogenicity and virulence of M. phaseolina is an important factor to consider in LDC's where intercropping is common. Some experimental plots of cowpeas at the experiment station in Sebele, Botswana in 1985 had a high incidence of seedling death due to M. phaseolina, but there was little or no incidence of the pathogen in sorghum.

Soil Propagule Isolation Technique: An isolation technique initially developed to isolate and quantitate viable oospores of P. sorghi is also useful to isolate propagules of several other plant pathogens. The technique requires simple mixing of soil with saturated sucrose (Density = 1.38), centrifugation at low speeds, and negative pressure sieving through nylon mesh of specific descending pore-sizes. Commonly isolated propagules include sclerotia of many sorghum pathogens (G. sorghi-zonate leaf spot, M. phaseolina-charcoal rot, R. sorghi-sooty stripe), endomycorrhizal spores and mycelia, oospores, and conidia. The technique represents a research tool for use in LDC's to evaluate pathogen populations in specific field soils and locations regarding actual sources of pathogen inoculum, quantities present, their viability and germinability, and naturally-occurring parasites. The latter factor may provide potentials to exploit for biocontrol. Quantitation of propagules is also useful in most efficiently locating disease nurseries dependent upon soilborne inoculum.

Endomycorrhizae: Initial studies of vesicular arbuscular mycorrhizal (VAM) associations with sorghum indicate that up to 60% of the root length of primary root systems may become infected in the field within two weeks after planting. Infection in individual plants was observed as early as eight days after planting. There is variability in root infection of sorghum within and between fields, but the results suggest that VAM may have a significant role in sorghum seedling establishment and growth prior to development of the permanent root system. Fertility and cultivar interaction are also being considered in the research.

Travel

- G.N. Odvody traveled to Botswana and Zimbabwe April 17-26, 1985, conferred with GOB, Bean/Cowpea CRSP, ATIP, and INTSORMIL scientists at Sebele experiment station, ICRISAT scientist (L. House) in Bulawayo and Zimbabwe Ministry of Agriculture scientist in Harare concerning sorghum and millet disease constraints and potential cooperative research. Evaluated diseases occurring in farmers' fields and research nurseries at several Botswana and Zimbabwe locations.

Publications and Presentations

Jones, S.M., and G.N. Odvody. 1985. Use of pycnidial characters in determining susceptibility of sorghum to M. phaseolina from divergent hosts. Presented at 14th Biennial Sorghum Research and Utilization Conference, February 18-20, 1985, Lubbock, Texas. In press.

Mott,J.B., and G.N. Odvody. 1985. Vesicular-arbuscular mycorrhizal associations of sorghum seedlings. Presented at 14th Biennial Sorghum Research and Utilization Conference, February 18-20, 1985, Lubbock, Texas. In press.

Odvody, G.N., and S.M. Jones. 1985. An isolation technique to quantitate soilborne oospores of Peronosclerospora sorghi and propagules of some other sorghum pathogens. Presented at 14th Biennial Sorghum Research and Utilization Conference, February 18-20, 1985, Lubbock, Texas. In press.

Schuh, W., and R.A. Frederiksen. 1985. The spatial distribution of sorghum downy mildew and its implication for resistance breeding. Presented at 14th Biennial Sorghum Research and Utilization Conference, February 18-20, 1985, in Lubbock, Texas. In press.

Craig, J., and R.A. Frederiksen. 1985. Effect of seed safeners on incidence of sorghum downy mildew. Presented at 14th Biennial Sorghum Research and Utilization Conference, February 18-20, 1985, Lubbock, Texas. In press.

Food Quality and Nutrition

Executive Summary

A nutrition status survey of preschool children in Uganda and Sudan revealed that when using weight for age as a standard, 70% of the children in Uganda and 97% of the children in eastern Sudan had some degree of malnutrition. Half of the children in both countries were stunted, which meant that malnutrition had been present over a long period. This is a base line study that other researchers can use to determine if the introduction of sorghum varieties improves nutritional status.

In Honduras, researchers found 90% of the people in the mountain villages using wood ashes and 93% percent of the people in the lowland villages using lime to process sorghum for tortillas. Tests showed that lime treated tortillas had 500% more calcium and 120% more iron than ash tortillas. Since calcium and iron are more limiting than protein in diets of Hondurans who consume sorghum tortillas with beans, lime treatment would be recommended over ash treatment. (MSU-3)

In feeding experiments with chicks, rats and Japanese quail, diets containing several varieties of high tannin sorghum (HTS) depressed growth rate and feed efficiency as compared with feeding low tannin sorghum (LTS).

Experiments with chicks demonstrated that high tannin sorghum (HTS) was not as detrimental in HTS-peanut meal diet as in the HTS-soybean meal diet equal in both sorghum and non-sorghum protein. Since peanut meal is much lower in lysine and threonine than soybean meal, these amino acids were added to the peanut meal diet in amounts equivalent to soybean meal. Thus, methionine was the first limiting amino acid in both the sorghum and peanut meal diets. Supplementing both HTS diets (soybean and peanut meal) with methionine completely overcame the growth depression of tannin and improved feed conversion. (PRF-4R)

Sorghum relies more on chemical defenses against biological constraints than do any of the other cereals. The tannin and other phenols which are the subject of an INTSORMIL investigation play a prominent role in sorghum's chemical defense against several of the biological constraints: bird damage, weathering, fungal pathogens, preharvest germination, and perhaps *Striga*.

Birds prefer to eat sorghum which is juicy and immature. Researchers found that the high tannin sorghums which birds tend to avoid are high in

Previous Page Blank

tannin only in the mature dry grain. It appears to be the precursors of tannin, rather than tannin itself, which repel birds. If we could block the conversion of the precursors to tannin, we should improve the nutritional quality of high tannin sorghum without sacrificing its bird resistance. (PRF-4B)

As human studies have shown that some sorghum foods have poor protein digestibility compared with food preparations made with other cereal grains, our work has focused on the chemical changes that occur when sorghum proteins are heated. Using this approach, we have found a means of improving the protein digestibility of sorghum foods. We have identified two treatments which significantly improve the *in vitro* protein digestibility of sorghum. (PRF-3B)

Studies showed that the nutritional value of sorghum tortillas and related lime-cooked products was quite comparable to that of similar maize foods. Sorghum can be substituted for part or all of the maize without adversely affecting the nutritional level for consumers. Sorghum, in general, has about 95% the nutritional value of maize for livestock, and that appears true for tortillas and other lime-cooked foods as well.

Pearled sorghum has nutrient digestibilities equal to or better than maize; but the lysine content is decreased so it has lower nutritional value.

Both maize and sorghum require a high protein quality supplement to meet the amino acid requirements of livestock and humans. (TAM-26)

Factors Affecting Common Preferences for Sorghum, and Assessing Malnutrition in Children

Project MSU-3

Mary Futrell

Mississippi State University

Other Researchers

Mary Dundas, Ph.D. - Research Assistant

Sauteun Lee, M.S. - Research Assistant

Mary Schlicher, M.S. - Research Assistant

Yvonne Sasso, M.S. - Research Assistant

Summary

The growing of more sorghum can be used both in Sudan and Uganda to alleviate malnutrition in children. Sorghum is used in the Sudan in the form of a fermented bread. Many have a preference for certain varieties, however, the price of grain was the determining factor in type and amount used. In Uganda, cassava and plantain (matoke) were the main food. The children would have been better nourished if sorghum and beans were grown. Uganda has potential for the introduction of sorghum varieties near the Kenya and Sudan border. This is a potential research area if linked with Kenya.

A nutrition status survey of preschool children in both countries revealed that when using weight for age as a standard, 70 % of the children in Uganda and 97 % of the children in eastern Sudan had some degree of malnutrition. Half of the children in both countries were stunted which meant the malnutrition present had been over a long period. This is a base line study that other researchers can use to determine if the introduction of sorghum varieties improves nutritional status.

When a new variety of sorghum is released as Tortillero in Honduras, it is important to test the protein quality. We found that 90 % of the persons in the mountain villages use wood ashes and 93 % use lime in the lowland villages, to process the sorghum for tortillas. We used both methods to make tortillas for the test. The protein efficiency ratio of the ash treated sorghum was as good as values for the rats fed casein and higher than lime processed tortillas. The amino acid methionine was higher in the ash tortillas and the leucine to isoleucine ratio was improved. However, the lime treated tortillas had 500 % more calcium and 120 % more iron than ash

tortillas. Since calcium and iron are more limiting than protein in diets of Hondurans who consume sorghum tortillas with beans, lime treatment would be recommended over ash treatment to provide adequate calcium.

Institutions

Collaborating Host Countries: Sudan, Honduras, and Uganda

Linkages:

- Collaboration in Honduras was with the Ministry of National Resources. Sorghum samples were provided by D. Meckenstock.
- In Sudan, the research was coordinated through faculty members at AhFad University. Dr. K. Arinbjarnarson, with the Sudan Council of Churches, made arrangements for the work in UmSagata. E. McKenzie, of Foster Parents Plan International, made arrangements for work in Nuba and Oliab. We were also assisted by AID, the Food Research Center in Khartoum, and faculty members from the University of Khartoum.
- In Uganda, the study was coordinated through the Ministry of Health and the coordinator of Global Outreach in Uganda. Dr. M. Mutesasira, Chief Medical Officer of Health and Prof. J. Namboza cooperated on the project. Ambassador A.S. Awori made preliminary arrangements.
- These linkages were made during the first five year project, and future linkages will not be made because this project will not continue.

Ecogeographic Zones Most Benefited by Research

The two ecogeographic zones that will benefit from this research are East Africa and Latin America.

Objectives and Research Procedures

Year 6 Objectives

The objectives of the Sudan project finished in the 6th year were: 1) To determine consumer preference for sorghum according to color, variety, and flavor and how these grains were processed and prepared for family consumption in local villages. 2) To determine the social, economic, and local dietary factors that affected the food consumption patterns of people in Sudan. 3) To record other indigenous foods eaten by both adults and 3 to 5 year old children. 4) To analyze sorghum flour and foods used in diets of children to determine if they consumed an adequate intake of the essential amino acids. 5) To devise mixtures of economical indigenous foods that

provided more nutritious diets for children. 6) To develop a program to monitor malnutrition which will be used as a yardstick for assessing progress of agricultural development by recording nutrient intake, growth rate, breast feeding practices, and infant mortality by seasons.

The objectives of the Ugandan study were: 1) To assess the prevalence of malnutrition of preschool age children in eight Uganda villages by anthropometric measurements. 2) To compare the nutritional status of the children in the rural villages to those in the urban villages. 3) To determine factors which were likely to be contributing to the prevalence of malnutrition in the eight villages. 4) To record and evaluate the types of foods consumed by the children in each area, especially cereals as sorghum. 5) To recommend some approaches to improving the nutritional status of the children in the eight Ugandan villages.

The objectives of the Honduran study were: 1) To determine protein quality of the sorghum variety Tortillero developed and released in Honduras by protein efficiency ratio (PER) and amino acid analyses. 2) To study the nutritional quality of sorghum tortillas made with lime or ash. 3) To assay the lime or ash treated sorghum tortillas for calcium, phosphorus and iron content to determine if differences exist. Data obtained in this study will have practical value for plant breeders and nutritionists who work with malnourished children in Honduras.

Changes in Objectives from the Previous Year

These objectives were the same as the previous studies on this project.

Research Procedures

SUDAN - Villages were selected for the study in the central and eastern part of Sudan where grain sorghum was a staple in the diet of the people. The three villages surveyed were UmSagata, Nuba, and Oliab, which were located in the semiarid part of Sudan in different directions from Khartoum, the capital city. UmSagata, a typical Eritrean refugee village, was southeast of Khartoum near the Sudan-Ethiopian border. Nuba village was located 45 km directly south of Khartoum on the White Nile River. Oliab village was 30 km north of Khartoum away from the Nile River and the main road to Khartoum.

A questionnaire was developed requesting information on socioeconomic status, sorghum food preparation, food practices and sorghum consumption.

The interview was conducted by a resident of each village who spoke the language of that village fluently and was known and respected by the people.

Observations were made of dietary patterns and household tasks performed by the women in each family. The preparation of all foods made from sorghum grain was observed and recorded as well as the methods of storage of the grain and the food. Lengthy informal discussions with family members clarified Sudanese customs and food habits.

Data collected in February and March 1984 included 90 households of which there were 30 in each village. The wife was interviewed in each household, but occasionally the husband or members of the extended family, friends and neighbors joined in the discussion.

Anthropometric Measurements. Children examined ranged in age from 6 to 60 months and were measured in their homes using light weight portable weighing and measuring equipment. Data on 116 children were collected in the three villages with 44 children examined in UmSagata and 36 children examined in both Nuba and Oliab. Anthropometric measurements of children included height, weight, and arm circumference. Chi square analyses were used to determine if associations existed between the three villages and the degree of malnutrition as determined by the Gomez et al. (1956) and the Waterlow (1972) classifications.

Chemical Analysis. Samples of sorghum, sorghum flour and lentils from Sudan were analyzed for amino acid content by the Biochemistry Department at Mississippi State University. Proximate analysis on the sorghum grain flour and lentils was based on Standard (AOAC, 1981) methods.

UGANDA - The Ugandan representative of Global Outreach, a private voluntary organization, plus government officials of Uganda, selected the sites for participation in the nutritional status survey. They were selected from both rural and urban areas to determine if differences existed in the amount and severity of malnutrition in children, as well as in diet composition.

Data were collected from 438 children in the eight villages: 76 in Bbina, 73 in Bulama, 35 in Bunnyiro, 38 in Lwangosa, 53 in Mbehenyi, 45 in Naguru, 100 in Ntinda, and 38 in Wakisi.

Anthropometric Assessment. Data gathered in November 1984 from the children in eight locations included height, weight, and mid-upper arm circumference. An arm circumference of above 13.5 cm was considered normal

for children from 1 to 5 years of age, one between 12.0 and 13.5 cm as indicating moderate malnutrition and one below 12.0 cm more serious malnutrition (Latham, 1979). Weight for age data were assessed by the Gomez et al. (1956) classifications based on weight as a percentage of that expected for age. Children in the study were also evaluated by a classification suggested by Waterlow (1972) which is based on height for age and weight for height. Children were grouped as normal, stunted (height deficit for age), wasted (weight deficit for height), or both stunted and wasted. Height for age values greater than 95 %, 95% to 90%, 90% to 85%, and less than 85 % of standard determined grades of stunting. Weight for height values greater than 90 %, 90 % to 80 %, 80 % to 70 %, and less than 70 % of standard defined grades of wasting.

Clinical Evaluation. In 1962, the World Health Organization Expert Committee on Medical Assessment of Nutritional Status devised a classification of physical signs to be used in nutritional surveys. This guide was updated in 1966 and was used in this study to record physical signs noted on eyes, hair, abdomens, skin, and nails.

Dietary Intake. A 24-hour recall was made for both child and mother. Other food habits were recorded. Special attention was given to the type of cereal grain consumed or grown as sorghum or millet.

HONDURAS - A new released white seeded sorghum grain of the variety Tortillero was obtained for the study from a plant breeder at the La Lahosa Experiment Station in southern Honduras.

Tortilla Preparation. Sorghum tortillas were made with a procedure that simulated the traditional village procedure of southern Honduras. Lime used to make lime treated sorghum tortillas (LTST) was purchased in southern Honduras at the local market. Native Mahogany wood ash of Honduras was used for making ash treated sorghum tortillas (ATST). The ATST and LTST were freeze dried to a moisture level below 5 % and ground to a fine powder in a Cyclone mill so it would pass through a 1 mm sieve. It was stored in the freezer at a below 0° C in a moisture proof plastic bag until used.

Chemical Analysis. Samples of sorghum grain, ATST and LTST, were analyzed for amino acid composition by the Biochemistry Department at Mississippi State University. Sorghum grain, ATST and LTST were analyzed in triplicate for Kjeldahl crude protein (N x 6.25), fat (ether extract),

moisture, crude fiber, and ash content based on Standard (AOAC 1980) methods.

Diet Formulation. Based on the results of the proximate analysis, the diets for the PER bioassay were calculated according to AOAC (1980) method, with exception of moisture which was adjusted to 6 %. All of the diets were formulated to contain 10 % protein (N x 6.25), 8 % fat, 5 % mineral, 1 % crude fiber, 1 % vitamin, and 6 % moisture. Formulated diets were analyzed for crude protein (N x 6.25), fat, mineral, crude fiber, and moisture level.

Rat Bioassay - PER. Twenty-eight weanling male albino Sprague Dawley rats, 21 to 28 days old, were weighed and housed individually in stainless steel wire mesh cages upon arrival. They were then randomly assigned to three treatments according to weights. Rats were acclimatized for 7 d during which Purina Rat Chow and tap water were supplied ad libitum. At the beginning of the assay period, group 1 rats (10 rats) were fed the casein control diet, group 2 rats (10 rats) were fed the ATST diet and group 3 rats (8 rats) were fed the LTST diet. After 28 d of feeding, the total food consumption, protein intake, average daily gain, feed efficiency, and PER values were calculated.

Organ and Blood Sampling. After the rats were fed their respective diets for 28 d, they were anesthetized with chloroform vapors. Blood was withdrawn from all animals by cardiac puncture and collected into dried heparinized plastic tubes for minerals, hematocrit, and hemoglobin determinations. Livers and hearts from all rats were quickly excised, rinsed with deionized-distilled water, blotted, weighed, and stored frozen in plastic bags at 20° C until assayed for minerals. The Ca and Fe concentrations were determined by using flame atomic absorption spectrophotometry on a Perkin-Elmer Atomic Absorption Spectrophotometer (Model No. 2380, Norwalk, Connecticut).

Statistical Analysis. Data were analyzed by the method of least-squares analysis of variance (Harvey, 1972). Initial weight was included as a covariable in the analysis. Analysis of variance of a completely randomized design was used to calculate the differences in Ca, P, and Fe in ATST, LTST, and diets. When F values were significant, Student-Newman-Keuls' test was used to identify means that differed among treatments (Steel and Torrie, 1980). Simple correlation coefficients for several variables were performed using Pearson's Correlation method.

Project Output

Research Findings

SUDAN: Many of the results of the Sudan study were reported in the 5-Year Technical Research Report of the Grain Sorghum/Pearl Millet Collaborative Research Support Program. This study made in 1984 and finished in August revealed that the type of sorghum consumed by the people in the villages was determined by several factors including availability, cost, color of the grain and the variety that they grew themselves. Sorghum was eaten a minimum of once a day in Nuba by 50 % of the people, twice or three times a day in Oliab by 100 % of the people and a maximum of three or four times a day in UmSagata village by 84 % of the people interviewed. The famine and starvation in Africa is not unique to Ethiopia. The drought and consequent lack of water and food supply is critical for the people in Sudan who live in the eastern region near the Red Sea which borders Ethiopia and the western region which borders Chad. The Sudan study revealed that all of the children living in UmSagata near the Ethiopian border, as determined by weight for age data were malnourished. Stunting was more prevalent among children in Nuba and Oliab than UmSagata and wasting was more prevalent among children in UmSagata. Weight for age data indicated that the percentage of children with first degree and second degree malnutrition increased with increasing age in all villages and that the percentage of female children in second degree malnutrition was greater than male children in the three villages. The amino acid content of a mixture of 100 g sorghum flour and 50 g lentils from Sudan was determined. The chemical score was calculated and the lowest percentage was for methionine + cystine, however, the score was 89 %. Therefore, this mixture provided 25 g protein and meets the amino acid requirements for a child. Data from this study have been used by CARE and other agencies to meet the hunger needs in East Africa.

UGANDA: During November 1984 a survey of 458 children was conducted in five rural villages and three urban villages of Uganda. Malnutrition among children living in the five rural villages, Bulama, Bunnyiro, Lwangosa, Mbehenyi, and Wakisi, and in three urban villages, Bbina, Naguru, and Ntinda was evaluated by weight for age, height for weight, and height for age. According to the weight for age data, the average percentages of children malnourished to some degree in the five rural villages (63 %) and in the three urban villages (70 %) were the same. Weight for height data

indicated that 3 % of the children were normal in Bunnyiro (P<.05), while 23 % were normal in Bulama, 18 % in Lwangosa, 21 % in Mbehenyi, and 32 % in Wakisi. Fewer children (14 %) were classified as slightly malnourished in Bunnyiro (P<.05) than in Bulama (59 %), Lwangosa (71 %), Mbehenyi (70 %), and Wakisi (53 %). More children were moderately malnourished (74 %) in Bunnyiro (P<.05) than in Bulama (11 %) and Lwangosa, Mbehenyi, and Wakisi (8 %). The average percentages of wasting (weight deficit for height) in the five rural villages (81 %) and in the three urban villages (75 %) were the same. Based on the height for age data, more children were mildly malnourished (50 %) in Bbina (P<.05) than in Naguru (24 %) and Ntinda (35 %). The highest percentage of severely malnourished children (16 %) was in Naguru (P<.05) followed by 3 % in both Bbina and Ntinda. Stunting (height deficit for age) in the five rural villages was in 63 % of the children in Lwangosa and 60 % in Mbehenyi (P<.05) compared to 48 % in Bulama, 49 % in Bunnyiro, and 47 % in Wakisi. In the three urban villages, more children were experiencing stunting (63 %) in Bbina (P<.05) than in Naguru (44 %) and Ntinda (45 %). The average percentages of stunting in the five rural villages (53 %) and in the three urban villages (51 %) were the same. More children were classified as normal in the 1 to 23 mo age group (37 %) than in the 24 to 60 mo age group (30 %). In the rural villages, the incidence of mild malnutrition increased with increasing age. More normal males (36 %) were observed than females (30 %), more mildly malnourished males (49 %) than females (30 %), and more moderately and severely malnourished females were observed than males. Percentages of children with pale conjuctiva of the eyes ranged from 3 % to 82 %. In all villages, 42 % of the children had brown hair, 19 % had red hair, and 2 % had white hair, which indicated protein deficiency. Sixty-five percent of the children were observed with swollen abdomens. Foods consumed were mainly matoke (banana) and cassava. Recommendations involve improvements in child-health services, nutrition and infection control through education and local long term follow-up on planned projects in the villages.

Sorghum and millet were grown near the Kenyan border. The potential for growing these grains in the next few years is great. It would improve the diet of the children, as children eating the cereal grains were better nourished than children eating only cassava and banana. It would also be a source of income for Ugandan farmers.

HONDURAS: The protein quality of tortillero variety sorghum tortillas processed by lime or ash was evaluated by protein efficiency ratio (PER) and amino acid analyses. The PER values of ash treated sorghum tortillas (ATST), which contained 4 % casein to yield a 10 % protein diet, were higher ($P<.05$) than PER values of lime treated sorghum tortillas (LTST) supplemented with casein. However, the PER values of ATST diet were not different ($P>.05$) from PER value for rats fed a 10 % casein control diet. Analysis for amino acid concentrations in ATST and LTST indicated that lysine, threonine and methionine were the first, second, and third most limiting amino acids, respectively. Methionine was less limiting in ATST than in LTST. The leucine to isoleucine ratio improved in ATST compared to LTST. The superiority of ATST to LTST diet was believed to be due to improved availability of lysine, threonine, methionine and leucine to isoleucine ratio.

Mineral analysis revealed that LTST had 500 % more Ca and 120 % more Fe but no difference ($P>.05$) in P content than in ATST. There was a correlation ($P<.001$; $r = .782$) between PER values and the wet weight of the rat liver but no correlation with the wet weight of the rat heart. This suggested that the higher the protein quality, the larger the rat liver size. On relative body weight basis, however, there was no correlation between PER values and liver weight and PER values were negatively correlated to heart weight ($P<.001$; $r = -.769$).

Higher ($P<.05$) hematocrit, hemoglobin, liver Ca, P and Fe values were detected in rats fed either ATST or LTST diet than those of rats fed the control diet. However, rats fed ATST diet had higher ($P<.05$) liver Ca and P values but no difference ($P>.05$) in liver Fe values than those fed LTST diet. This may be attributed to a difference in concentrations and availability of these minerals in the diets even when they were formulated to the same level at 5 %. Dietary treatments had no effect ($P>.05$) on heart Ca, P and Fe values and may be due to the fact that heart is not a main storage organ for these minerals.

No differences ($P>.05$) in plasma Ca in all rats fed different diets were observed, since Ca level was not affected by dietary intake. Higher ($P<.05$) plasma P was observed in rats fed either the ATST or LTST diet than those of rats fed the control diet.

Since sorghum tortillas are usually consumed with beans, therefore protein is not as important in Honduras as an adequate supply of calcium in the diet and hence, lime treated sorghum tortillas would be recommended for people who consume tortillas as their daily staple over the ash treated sorghum tortillas as an adequate source of calcium.

Travel

- November 9 - 21, 1984. M. Futrell and M. Schlicher traveled to Uganda to collect data and to see if linkages could be made for future INTSORMIL research. Travel paid for by another Mississippi State University Project and Global Outreach, a private voluntary agency for the government of Uganda.
- September 1, 1983 - April 1984. M. Dundas traveled to Sudan on Fulbright Grant. She worked on this grant until August 30, 1984. She collected the data for the Sudan Project while there.
- February 3 - 6, 1984. Washington, D.C. M. Futrell, workshop leader for symposium on Women and World Hunger, Women in Title XII Projects.
- March 19 - 24, 1985. Washington, D.C. M. Futrell, workshop leader and panel member during International Development Conference. Panel concerned with Title XII Research.
- April 24 - 28, 1985. Washington, D.C. M. Futrell, panel member to discuss nutrition research in Honduras, Sudan, and Uganda as it relates to Title XII Programs.
- September 9 - 12, 1984. M. Futrell, Purdue University for INTSORMIL Principal Investigators Review.
- February 15 - 22, 1985. Lubbock, Texas. M. Futrell attended INTSORMIL Planning Meeting.

Publications

Lee, S.S. Evaluation of protein quality of a sorghum variety tortillero grown in Honduras (Master's Thesis). December 1984.

Schlicher, M. Nutritional status of preschool children in Uganda (Master's Thesis). May 1985.

Dundas, M.L. Socio-economic influence on the use of sorghum products and nutritional status of children in Sudan (Doctoral Dissertation). August 1984.

Futrell, M., L. Kilgore, E. McCulloch, and M. Dundas. 1985. An interdisciplinary approach to nutrition, with grain sorghum and pearl millet as the staple food. Fighting Hunger with Research, pp.126-131.

Dundas, M.L., and M.F. Futrell. 1985. Socio-economic influence on the use of sorghum products and nutritional status of children in Sudan. Nutrition Research (In Review).

Futrell, M.F., S.S. Lee, and A. Sookchai. 1985. Evaluation of protein quality of a Honduran sorghum variety tortillero. Journal of Cereal Science (In Review).

Changes in Year 7 Objectives

Project has been terminated.

Study of Biological Effects of Dietary Tannins from High Tannin Varieties of Sorghum and Procedures for Overcoming Toxic Effects

Project PRF-4R

John C. Rogler
Purdue University

Other Researchers

Dr. L.G. Butler - Professor of Biochemistry
Dr. D.M. Carlson - Professor of Biochemistry
Dr. H. Mehansko - Biochemistry, Post-doctorate
Dr. R.G. Elkin - Assistant Professor of Animal Sciences
Dr. V.A. Garwood - USDA, Georgetown, Delaware

Summary

In general, feeding chicks, rats and Japanese quail diets containing several varieties of high tannin sorghum (HTS) depressed growth rate and feed efficiency as compared with feeding low tannin sorghum (LTS). Experiments with chicks demonstrated that HTS was not as detrimental in a HTS-peanut meal diet as in an HTS-soybean meal diet equal in both sorghum and non-sorghum protein. Since peanut meal is much lower in lysine and threonine than soybean meal, these amino acids were added to the peanut meal diet in amounts equivalent to soybean meal and therefore, methionine was the first limiting amino acid in both the soybean and peanut meal diets. Supplementing both HTS diets (soybean and peanut meal) with methionine completely overcame the growth depression of tannin and improved feed conversion.

"Reconstitution" of whole sorghum grain was accomplished by mixing LTS and HTS with 30 % water plus 2 % mold inhibitor (60 % acetic and 40 % propionic acid). The grains were then stored in sealed plastic bags for 20 days, at which time they were dried and ground. This treatment reduced the assayable tannin content (vanillin method) by 90 %. Since 2 % mold inhibitor alone did not influence the assayable tannin, the effect is due either to the water treatment or a combination of water and inhibitor. This treatment completely overcame the growth depression of HTS in both chicks and rats and improved feed efficiency, although feed efficiency of animals fed treated HTS was still inferior to those fed either treated or untreated LTS. Thus, the described treatment ("reconstitution") of HTS is an

effective means of overcoming the toxic effects of dietary tannins in sorghum grain.

Institutions

Research was conducted in cooperation with Dr. V.A. Garwood of the USDA North Atlantic Poultry Research Laboratory, Georgetown, Delaware.

Objectives and Research Procedures

Our objective was to study the biological effects of dietary tannins from high tannin varieties of sorghum and determine procedures for overcoming these toxic effects.

Several high tannin varieties were fed to chicks, rats, and Japanese quail, and the effects on various parameters were observed. The efficacy of methionine supplementation and "reconstitution" (water treatment) on correcting the detrimental effects on condensed tannins was also determined.

Project Output

Experiments with various high tannin sorghum (HTS) grains showed a general reduction in growth rate and feed efficiency in both chicks and rats as compared with low tannin sorghum (LTS) grains. However, there were a few exceptions. For example, one year's crop of BR64 (HTS) depressed growth rate dramatically as compared with RS610 (LTS), when fed to chicks in sorghum-soybean meal diets, whereas the next year's crop of BR64 did not depress growth rate in the same type of diet even though the assayable tannin content was high. This is very unusual since BR64 is a variety of HTS which has always produced large reductions in growth rate and feed efficiency values in the past.

Another example was Savanna V, which contained only approximately half the assayable tannins as Savanna III. In a chick experiment, Savanna V did not depress growth rate, whereas Savanna III, which is a HTS variety used extensively in past research, produced a significant reduction in growth as compared with an LTS (RS610). In contrast, both Savanna V and Savanna III greatly depressed growth rate in the rats and were equally toxic.

These results demonstrate clearly that the chemistry and biological effects of condensed tannins are still not completely understood. It would be of interest to know why one year's crop of BR64 does not appear to be toxic although high in tannin content. The possibility arises that the

chemistry of the tannin might be altered by growing conditions. If so, and if the grain is still bird resistant, there is a possibility of selection for this less toxic form of tannin. Also, the difference in response of chicks and rats to Savanna V is of interest. Again, if Savanna V is as bird resistant as Savanna III, then, at least for sorghum to be fed to chicks, Savanna V would be the one of choice. This probably would depend on the reproducibility of the low tannin content and lack of toxicity in the chick in Savanna V grown in subsequent years.

A comparison was made between supplemental protein sources in chick diets containing LTS (RS610) and HTS (Savanna III). The protein sources chosen were soybean meal and peanut meal since both proteins are low in methionine (met). Lysine and threonine were added to the peanut meal diets up to the level in soybean meal, and thus methionine was the first limiting amino acid in both the sorghum-soybean meal and sorghum-peanut meal diet. HTS depressed growth rate and feed efficiency in diets containing either source of protein, but the magnitude of the effects was much greater with the HTS-soybean meal than the HTS-peanut meal diet. Methionine supplementation completely overcame the growth depression and improved feed efficiency in chicks fed HTS regardless of the supplemental protein source (soybean or peanut meal).

Since HTS has a greater effect in a methionine unsupplemented sorghum-soybean meal than a sorghum-peanut meal diet, the results suggest that the amino acid sequence or protein configuration is different in the two proteins. As a result, the tannin-protein complex may interfere to a greater extent with the utilization of methionine in soybean meal than in peanut meal. It had been demonstrated earlier that methionine supplement overcame the growth depression in a HTS-soybean meal diet but not in a HTS-crystalline amino acid diet. It would appear that the tannin-soybean protein complex exacerbates a deficiency of the most limiting amino acid (met), but at the same time, ties-up the tannin and prevents some other toxic effect. Since free crystalline amino acids do not complex with tannins, tannins have no effect on the utilization of the free methionine, and supplementation with more methionine does not overcome the detrimental effect of HTS. Furthermore, crystalline amino acids in the same concentration as in soybean meal do not provide the protective effect of the

soybean meal-tannin complex in preventing some other toxic effect of tannins not associated with digestibility.

In cooperation with Dr. V.A. Garwood of the USDA, LTS and HTS were compared in three lines of Japanese quail. The lines consisted of a random-bred control population and two lines selected for either fast growth or slow growth. HTS depressed growth rate in all three lines of quail as compared with LTS. The diets used were sorghum-soybean meal diets similar to those used for chick studies. Although the difference between HTS and LTS was highly significant, the magnitude of the difference was not as great as usually seen in chicks or rats. This might represent a natural selection of a wild species to tolerate dietary tannin.

"Reconstitution" of sorghum grain was accomplished by mixing whole LTS (RS610) and HTS (Savanna III) grains with 30 % water (W:V) plus 2 % of a mold inhibitor (60 % acetic acid:40 % propionic acid). The treated grains were then stored in sealed plastic bags for 20 days, at which time they were placed in a forced-air oven at 54°C for 43 hours. The grains were then allowed to equilibrate to atmospheric moisture for 48 hours prior to grinding. Both treated and untreated grains were compared in both chicks and rats.

Treatment of HTS reduced the assayable tannin content (vanillin procedure) by 90 % (3.96 % vs. 0.39 % catechin equivalents for untreated and treated grain, respectively). The addition of mold inhibitor alone (2 % acetic:propionic) had no effect on the assayable tannin content, so the treatment effect is due either to the water or the combination of water and mold inhibitor.

In the study with chicks, untreated HTS depressed growth rate and feed efficiency as compared with untreated LTS. Water treatment of HTS completely overcame the growth reduction and improved, but did not completely correct, the effects of HTS on feed conversion. Similar results were observed with rats, except that treatment of LTS did depress growth somewhat, possibly due to some residual acetic acid and/or propionic acid.

Earlier work with rats had demonstrated that dietary HTS induces hypertrophy of the parotid gland and increased synthesis of proline-rich protein. In contrast, HTS had no effect on the parotid gland of the hamster, which is extremely sensitive to tannins. The salivary glands of the chick are quite diffuse throughout the oral cavity and are difficult to

dissect intact. Therefore, cross-sections through the mouth or beak area were performed on chicks fed LTS or HTS diets. No histological differences were observed between the two types of sorghum, therefore, the chick appears to respond like the hamster rather than the rat in respect to tannin effects on the salivary glands.

Publications and Presentations

Publications

Sell, D.R., W.M. Reed, C.L. Chrisman, and J.C. Rogler. 1985. Mucin excretion and morphology of the intestinal tract as influenced by sorghum tannins. Nutr. Rep. Int. 31:743-749.

Rogler, J.C., H.R.R. Ganduglia, and R.G. Elkin. 1985. Effects of nitrogen source and level on the performance of chicks and rats fed low and high tannin sorghum. Nutr. Res. In press.

Asquith, T., H. Mehansko, J. Rogler, L. Butler, and D. Carlson. 1985. Induction of proline-rich protein biosynthesis in salivary glands by tannins. Fed. Proc. 44:1096 (Abstract).

Mehansko, H., J. Rogler, L. Butler and D. Carlson, 1985. An unusual growth inhibiting effect of tannins on hamsters. Fed. Proc. 66:1860 (Abstract)

Mehansko, H., T. Asquith, J. Rogler, D. Carlson, and L. Butler. 1985. Protective response of animal ingesting condensed tannins. Ind. Soc. Chem. Ecology. (Abstract)

Butler, L., and J. Rogler. 1985. Enhancement of high tannin sorghum utilization characterization, metabolism, and detoxification of sorghum tannins and other polyphenols. INTSORMIL: Fighting Hunger with Research, pp. 140-145.

Rogler, J.C., and L.G. Butler. 1985. Enhancement of high tannin utilization: biological effects of dietary tannins. INTSORMIL: Fighting Hunger with Research, pp. 145-150.

Pearson-Priller, A. 1985. Further Studies on the Detrimental Effects of Feeding High Tannin Sorghum to Chicks and Rats. M.S. Thesis. August 1985. Purdue University, West Lafayette, Indiana.

Presentations

Rogler, J.C. 1985. Biological Effects of Condensed Tannins - An Update. Seminar presented in the Department of Animal Sciences, Federal University of Vicosa, Vicosa, M.G., Brazil.

Changes in Year 7 Objectives

Because this project was not renewed in Year 7, there are no plans for research in Year 7 other than to tie-up some loose ends for future publication. If any new work is conducted, it will be in cooperation with Dr. Butler under Project PRF-4B.

Enhancement of High Tannin Sorghum Utilization

Project PRF-4B

Larry Butler

Purdue University

Other Researchers

Host Country Principal Collaborators:

Moussa Oumarou, Director, National Food Quality Laboratory, Kolo, Niger

R. Jambunathan (ICRISAT)

S. Mukuru (ICRISAT)

P. Pushpamma, Anhdra Pradesh Agricultural University, Hyderabad, India

Violeta Bello, University of Southern Mindanao, Philippines

R. Bressani (INCAP)

John Axtell - Purdue University

Allen Kirleis - Purdue University

R. Nicholson - Purdue University

John Rogler - Purdue University

Gebisa Ejeta - Purdue University

Thomas Housely - Purdue University

Dr. Swaminathan - Purdue University

Dr. Pratt - Purdue University

D. Carlson - University of California

L.W. Rooney - Texas A&M University

Dr. Waniska - Texas A&M University

F.R. Miller - Texas A&M University

R. Bullard - Denver Wildlife Center

Summary

More than other cereals, sorghum relies upon chemical defenses rather than husks, beards, etc. We are just now recognizing the true significance of these chemical defenses to the sorghum plant and to other organisms which infest, prey upon, compete with, and consume it. Our work is focused upon just one group of defense chemicals of sorghum, the phenolics (which include tannins, pigments, and several others), but through this group of sorghum components we relate to nutritionists, geneticists, plant physiologists, pathologists, agronomists, cereal chemists, and food technologists. The

presence of these phenolic materials in sorghum seed benefits the seed by protecting them against birds, weathering, and pre-harvest germination, but this chemically protected grain is less suitable as human or animal food than it would be if these defense chemicals were absent. The general objective of our research is to eliminate or minimize the antinutritional effects of sorghum's phenolic materials without diminishing their ability to protect the crop.

Part of our work, then, is the investigation of what happens when an animal eats sorghum grain containing tannin. With our collaborators, we have recently discovered that many animals "fight back" in a kind of chemical warfare. This defensive response greatly lessens, but does not completely overcome, the antinutritional effects of dietary tannin. Animals unable to respond (hamsters have the appropriate gene but do not use it) may be killed by tannin-containing diets to which rats and mice readily adapt. This defensive response involves three-fold enlargement of the parotid glands, modifying their secretions so that a major component of the saliva is a unique set of specialized proteins which bind the tannin and minimize its interference with digestion. These proteins were already known to be present in human saliva; we have shown what their function is. Without these salivary tannin-binding proteins, humans would presumably be much more vulnerable, like hamsters, to dietary tannin. Human diets include many tannin-containing foods besides sorghum (tea, fruit, beans, red wine, etc.). It has been proposed that humans actually choose foods containing tannins, that we have an innate taste for tannins, like a taste for sweetness. Our collaborators have shown that propranolol, a drug prescribed for migraine headaches and other conditions, blocks rats' defensive response against dietary tannin. It is not yet known whether human patients on propranolol are similarly more vulnerable to dietary tannin.

A similar system of specialized tannin-binding proteins is utilized by other organisms. With our collaborators, we found that the fungus which causes anthracnose, a major disease of sorghum and corn, protects its spores from phenolic defensive chemicals produced by sorghum in the same way as do rats and humans. Birds use a somewhat different system. Birds prefer to eat sorghum which is juicy and immature. We have found that the high tannin sorghums which birds tend to avoid are high in tannin only in the mature dry grain. It appears to be the precursors of tannin, rather than the

tannin itself, which repel birds. If we could block the conversion of the precursors to tannin, we should improve the nutritional quality of the high tannin sorghum without sacrificing its bird resistance.

In order to pursue this and other strategies, we grow sorghum in tissue culture as small clumps of cells which we analyze intensively and from which we attempt to select mutants with especially useful characteristics. We have recently succeeded in regenerating sorghum plantlets from cells cultured from a high tannin line. These studies, and others not described here, are leading us to an understanding of the cellular chemistry of sorghum, and should make it possible to "engineer" the characteristics of the plant to overcome its present constraints.

Linkages:

National Food Quality Laboratory, Kolo, Niger (M. Oumarou). After a training period here for Dr. Oumarou, we have supplied equipment and chemicals to be used in establishing various analyses in the laboratory there. We have experienced slow and ineffective communications about some details.

ICRISAT (R. Jambunathan and S. Mukuru). A manuscript describing the work which R. Jambunathan did here in our laboratory in 1983/1984 and some additional work after he returned to ICRISAT has been submitted to J. Agric. Food Chemistry. This manuscript describes important evidence linking resistance to weathering with the presence of flavan-4-ols in the seed. It suggests that a simple chemical assay for flavan-4-ols may be useful in predicting weathering resistance. Mukuru recently visited us at Purdue University to firm up plans for his sabbatical year here; his collaboration with us will be a followup of the work on resistance to weathering, and additional work on tannin detoxification by traditional Ugandan alkali treatments.

Andhra Pradesh Agricultural University (Dr. Pushpamma). With Dr. Pushpamma, we are exploring the role of sorghum phenols in resistance to stored grain insects. We are identifying, from the sorghum collection here at Purdue, lines of sorghum which are low in tannin (and therefore nutritionally good) and high in other phenols. Dr. Pushpamma thinks these will be resistant to insects in storage, which is a severe problem in India.

University of Southern Mindanao, Philippines (Bello). This work involves alkali detoxification of high tannin sorghum for feeding to poultry.

INCAP (Bressani). We will continue our modest work on comparison of the dietary effects of bean tannins with those of sorghum tannins.

Objectives, and Constraints

Year 6 Objectives

1. To elucidate the biochemical basis for the antinutritional effects of sorghum tannins and polyphenols.

2. To elucidate the biochemical basis for the agronomic benefits of sorghum tannins and polyphenols.

3. To eliminate or minimize the antinutritional effects of sorghum tannins and polyphenols while maintaining or enhancing the agronomic benefits of these materials.

Constraints

Sorghum relies more on chemical defenses against biological constraints than do any of the other cereals. The tannin and other phenols which are the subject of our investigation play a prominent role in sorghum's chemical defense against several of the biological constraints: bird damage, weathering, fungal pathogens, preharvest germination, and perhaps *Striga*.

Problems Regarding Achievement of Objectives

One major part of our work is growth of sorghum in tissue culture. Now that we have gained considerable experience with this technique, it is becoming clear that we face an unanticipated problem. When we first establish sorghum cell lines in culture, they respond to the stress by producing large amounts of phenols and, in some cases, tannins. These cell lines generally grow only a few months before they are killed by the toxic phenols/tannins. During culture, a self-selection process occurs; the surviving cell lines have lost their ability to make these toxic materials. This selection against the ability to carry out the synthesis of the materials we are studying generates cell lines easy to culture but which are of only limited usefulness. We overcome this problem by continually initiating new cultures so that we have suitable material to study. We hope to overcome it in a more illuminating manner by stimulating the dormant cells with pathogens or injuries, so that in response to the new stress they once more make tannins and phenols.

Project Output

Research Findings for Immediate Use

1. Tannin-protein interactions. T. Asquith has shown that certain glycoproteins bind tannins even more strongly than the corresponding non-glycosylated proteins, which themselves have high affinity for tannin. Although the oligosaccharide chains have no intrinsic affinity for tannin when tested without the protein, when they are attached to the protein they enhance its affinity for tannin, and they confer specificity to the interaction. A salivary tannin-binding glycoprotein has considerably different affinity for tannin from several different sources; removal of the oligosaccharides results in equal and weaker affinity for the same tannins. The significance of these observations is that certain proteins/glycoproteins seem to be "designed" to selectively bind (and presumably inactivate) specific tannins. The high degree of specificity of this interaction implies a correspondingly specific, but as yet unknown, role for the tannin.

With Dr. R. Nicholson, T. Asquith has found a set of highly selective tannin-binding proteins in the matrix surrounding and protecting the spores of the fungal pathogen which causes sorghum anthracnose. These proteins have far greater affinity for sorghum tannin, on a protein basis, than any other proteins we have examined, including the proline-rich tannin-binding proteins of saliva. We are beginning to ascertain a pattern in which sorghum utilizes tannin or other phenolics as a chemical defense against herbivores or pathogens or other biological constraints such as competitive plants, and the challenging organism responds by producing specific tannin-binding proteins to nullify the advantage conferred by the chemical defense. In some cases we see this "chemical warfare" escalating to another level. Not only does sorghum produce tannins to protect itself against the pathogen, and the pathogen produce specific proteins to bind and inactivate the tannins but the sorghum also produces other non-tannin phenolics which very effectively block the germination of the spores.

2. Dr. D. Netzly has found that sorghum root hairs are different from those of any other cereal in that each hair not in contact with substrate bears a tiny droplet of pigmented exudate which is very hydrophobic, virtually insoluble in water, and consists of almost a pure phenolic compound, not yet identified. D. Netzly has identified several hydrophilic

phenolics exuded independently by sorghum root hairs, and has shown that at least some of these materials are allelopathic against corn seedlings. This is another example of the efficient chemical defenses of sorghum. A manuscript describing these results has been submitted to Crop Science.

3. B. Daly has studied the phenolic materials and pigments produced by sorghum growing in tissue culture and has shown that most of them have absorption spectra corresponding to the rare anthocyanidin pigments apigeninidin and luteolinidin, which are characteristic of sorghum seeds and other tissues. B. Daly's observations suggest that the capacity for biosynthesis of phenolic materials of sorghum cells grown as undifferentiated callus is quite similar to that of vegetative tissue of the intact plant.

4. L. Putman has developed our HPLC into a system capable of resolving tannin components with varying degrees of polymerization. Using this system, L. Putman has independently confirmed our earlier report that the tannins characteristic of mature grain are formed late in seed development, as the seed desiccates after maturation. L. Putman has not been able to prove unambiguously that the final polymerization step of tannin synthesis is enzyme-catalyzed, but she is now poised for a direct extraction of the enzyme, if it exists, as well as its characterization.

Research Progress for Long-Term Use

Dr. H. Elhag has succeeded in regenerating apparently healthy plantlets from sorghum tissue culture cell lines initiated from developing embryos. Most of the plantlets (presently about 3 inches tall) appear to be normal, with vigorous leaves and roots. A large number of these are to be grown out to maturity to detect any abnormalities (a few are already evident) which may be useful in developing bird-resistant lines of good nutritional quality. They will also be useful for comparison to plants obtained from cells subjected to various selection procedures. What is so important about these plantlets is that they are from BR64, a bird-resistant sorghum which produces high levels of tannin. Thus, it is possible to utilize and manipulate precisely those sorghums which are of especial interest.

Networking Activities

Annual meeting, International Society of Chemical Ecology, Madison, WI., June 1985 (Butler presented poster on work). Annual meeting, American

Society of Biological Chemists, April 1985, Anaheim, CA (Asquith presented poster on work).

Several visits this year by collaborators, but none in which research was actually carried out. There were several in the previous year, and we will have at least two in the following year.

Research information exchange: In addition to exchanges with our collaborators listed above, others include (onle a representative list): Dr. Earl Foster, Dept. of Agronomy, North Dakota State University (barley samples); Dr. Alex Mosha, Tanzania Food and Nutritional Sciences, University of California, Berkeley (and through him, his Malaysian collaborator); Drs. Gary Hill and M.E. McCormick, University of Georgia Experiment Station, Tifton, GA; Dr. Charles Busby, Kualapuu, Molokai, HI; Dr. Ben Hardwick, Anheuser-Busch, St. Louis MO.; Dr. Susan Lunte, Procter and Gamble, Cincinnati OH.; Dr. Bruce Maunder, DeKalb-Pfizer, Lubbock, TX.

Assistance provided for host country researchers: see Dr. Oumarou under "Linkages".

Travel

I do not have any definite travel plans but will almost certainly travel, at least domestically.

Publications and Presentations

Publications

Dickerson, D.P., S.F. Pascholati, A.E. Hagerman, L.G. Butler and R.L. Nicholson. 1984. Phenylalanine ammonia-lyase and hydroxycinnamate: CoA ligase in maize mesocotyls inoculated with *Helminthosporium carbonum*, Physiol Plant Path. 25, 111-123.

Putman, L.J., and L.G. Butler. 1985. Fractionation of condensed tannins by counter-current chromatography. J. Chromatography 318, 85-93.

Ramadoss, C.S., J. Uhlig, D.M. Carlson, L.G. Butler, and R.L. Nicholson. 1985. Composition of the spore matrix of *Collectotrichum graminicola*. J. Agric. Food Chem. 33, 728-732.

Butler, L.G., D.J. Riedl, D.G. Lebryk, and H.J. Blytt. 1984. Interaction of proteins with sorghum tannin: Mechanism, specificity and significance. J. Am. Oil Chem. Soc. 61, 916-920.

Butler, L.G. 1984. Recent developments in the assay and characterization of tannin in sorghum grain. J. Am. Oil Chem. Soc. 61, 692.

Mehansho, H., J. Rogler, L.G. Butler, and D.M. Carlson. 1985. An unusual growth inhibiting effect of tannins on hamsters. Fed. Proc. 44, 1860.

Asquith, T., H. Mehansho, J. Rogler, L.G. Butler, and D.M. Carlson. 1985. Induction of proline-rich protein biosynthesis in salivary glands by tannins. Fed. Proc. 44, 1097.

Presentations

International Agriculture Seminar (with A. Kirleis), Purdue, January 1985.

Diplomats at Purdue University. April 1985.

Changes in Year 7 Objectives

Two objectives were added. One is to establish capability for tannin/phenol assays in the laboratories of two collaborators, Dr. Oumarou (Niger) and Dr. Pushpamma (India). The second is to add the investigation of pearl millet to our present investigations on sorghum.

Chemical and Physical Aspects of Food and Nutritional Quality of Sorghum

Project PRF-3B

Allen W. Kirleis

Purdue University

Summary

As human studies have shown that some sorghum foods have poor protein digestibility relative to food preparations made with other cereal grains, our work has focused on the chemical changes that occur when sorghum proteins are heated. Using this approach we have found a means of improving the protein digestibility of sorghum foods.

We have identified two treatments which significantly improve the *in vitro* protein digestibility of sorghum. The first of these is a simple lowering of the pH of the flour/water suspension prior to cooking and the second the addition of a reducing agent prior to cooking. When the pH of the suspension is reduced from 6.8 to 3.0, the corresponding *in vitro* protein digestibility of the cooked gruel increases from 51 % to 65 %, respectively. The West African preparation of acid tô using tamarind extract to lower pH, also shows some improvement in digestibility compared to neutral or alkali tô preparations.

The addition of small amounts of a reducing agent, such as 2-mercaptoethanol, dithiothreitol, or sodium bisulfite, to the flour/water suspension before cooking results in little or no decrease in *in vitro* digestibility due to cooking. Protein digestibilities remain at the level of the uncooked flour and are comparable to digestibilities of other major cereals. Furthermore, addition of weaker reducing agents such as L-cysteine have a significant effect on maintaining adequate digestibility. Further *in vivo* studies are planned to relate these effects more directly to the human.

As the major action of reducing agents on proteins is to cleave disulfide bonds, it appears that the disruption of these intra- and/or intermolecular bonds is important to the digestibility of the sorghum proteins. When cooked sorghum proteins are applied on a gel in a non-reduced state, a large molecular weight protein complex that is unable to enter the gel can be seen. These complexed proteins are not present in the extracted uncooked sorghum. When the complexed proteins are reduced they readily enter the gel as smaller molecular weight units. It is, however,

unclear at this time if these complexes are made up of only kafirin proteins or if they include other protein classes. Apparently the heating process alone is forming large molecular weight protein complexes which are bound by intermolecular disulfide bonds. The addition of the reducing agent to the sorghum/water suspension before cooking creates a reducing environment which prevents these protein complexes from forming. We are conducting further work to examine the role of this protein complex on the digestibility of the sorghum proteins.

Institutions

Host Country Collaborators

Dr. Sitt Elnafar M. Badi, Director, Sudan

Dr. Laila Yahia Monawar, Nutritionist, Food Research Centre, Khartoum North, Sudan

Dr. Abdel Latif M. Nour, Sorghum Breeder, Agricultural Research Corporation, Wad Medani, Sudan

Mr. Moussa Oumarou, Head Cereal Quality Laboratory, Kolo, Niger

Dr. John Clark, Sorghum Breeder, Niger Cereal Research Project, Niamey, Niger

Dr. D.S. Murty, Sorghum Breeder, India

Dr. R. Jambunathan, Head Biochemistry Section ICRISAT Center, Hyderabad, India

Other Collaborators

Dr. K.E. Bach Knudsen and Dr. B.O. Eggum, Nutritionists, National Institute of Animal Science, Frederiksberg, Denmark

U.S. Collaborators

Drs. John Axtell, Larry Butler, Gebisa Ejeta and Maribeth Cousin; Purdue University

Dr. Lloyd Rooney; Texas A&M University

Drs. Mary A. Stuart and Phyllis E. Johnson; USDA-ARS, Grand Forks Human Nutrition Research Center

Dr. George G. Graham; Johns Hopkins University

Linkages

- Food Research Centre (FRC)/Agricultural Research Corporation (ARC), Sudan. The ARC breeding program provides sorghum entries

for quality evaluation. Milling and food quality testing on these entries is done at the FRC. Chemical and physical properties of these same entries are characterized in our laboratory. The chemical and physical properties of the sorghum entries are then compared with milling and food quality test results to identify grain properties related to end use quality.

- Cereal Quality Laboratory, Niger. M. Oumarou obtained four weeks of training on food quality testing procedures in our laboratory in May-June 1984. Many of the procedures that were demonstrated during the training period are now routinely used in the Cereal Quality Laboratory for evaluating sorghum end-use quality in Niger. In addition, quality tests on sorghum samples from Niger were carried out in our laboratory to complement on-going work at the Cereal Quality Laboratory.
- ICRISAT, India. A manuscript describing the grain weathering work between D.S. Murty and our laboratory has been written. This manuscript will be submitted to Cereal Chemistry. Results from this work indicate that sprout damage on sorghum can be detected using rapid viscometric methods for measuring alpha-amylase.
- National Institute of Animal Science, Denmark. A manuscript describing cooperative work done with K.E. Back Knudsen on the effects of cooking, pH, and polyphenol level on the nutritional quality of sorghum has been prepared. This work indicates that as a result of cooking, the prolamin proteins become unavailable to rats which results in a reduction in protein digestibility. In this study results from the *in vitro* pepsin protein digestibility assay were shown to be highly correlated with true protein digestibility in rats.

Objectives, Research Procedures, and Production/Utilization Constraints

Objectives

1. Develop simple screening test procedures for use in LDC breeding programs to predict grain food quality of sorghum.

2. Conduct basic studies to determine what components in sorghum are related to the functional properties of the grain that constitute food quality.

3. Identify sorghum grain processing and cooking procedures that lead to improved nutritional quality and acceptable food quality using both chemical and biological methods.

4. Train LDC personnel in cereal chemistry.

Sorghum/Millet Constraints

The physical and chemical properties responsible for the food quality of sorghum and millet grain are not yet well defined. Characteristics which are known to influence food quality include degree of endosperm corneousness, extent of water uptake by the grain or flour during cooking, presence of tannins and other phenols, and deterioration of the grain due to weathering. As sorghum and millet is used in many different ways in the developing world, the above grain quality characteristics do not always provide useful definitions of food quality. Thus, a more basic understanding of the physical and chemical properties of grain components, and the interactions of these components related to food making properties, which are the subject of our investigation, is needed to better define food quality and to develop better food quality testing procedures for traditional food products.

Problems with Achievement of Objectives

We have experienced some problems when working with LDC scientists. First, we have had problems in bringing relatively large quantities of sorghum grain from Sudan into the U.S. One shipment was badly infested with insects when it arrived at our laboratory and another was lost in transit. A minor problem in achieving our objectives is related to the slow communication links that we have with our LDC scientist cooperators.

Project Output

Research Findings for Immediate Use

1. Sorghum Protein Digestibility Studies: As human studies have shown that some sorghum foods have poor protein digestibility relative to food preparations made with other cereal grains, we have focused our work on the chemical changes that occur when sorghum proteins are heated. This research has led to a greater understanding of the biochemical nature of the sorghum proteins, how they react during the cooking process, and how protein associations may affect digestibility.

We believe protein digestibility of sorghum, whether it is low or comparable to other cereals, is primarily dependent on the method or conditions under which the grain is prepared and cooked. Previous *in vitro* protein digestibility studies in our laboratory using pepsin have shown that there is a sizable reduction (20 to 30 %) in protein digestibility when a sorghum/flour suspension is cooked to a gruel in a boiling water bath for 20 minutes. Decreases in protein digestibility of sorghum flour that has been cooked have also been reported in chickens (31.5 % decrease) and rats (7 % decrease). Thus, our goal is to develop processing and cooking conditions that will prevent the protein digestibility decreases normally observed when sorghum is made into a gruel.

a. Digestibility and Utilization of Protein from Nasha. Sorghum flour was fermented into nasha, a traditional Sudanese food, and freeze dried or drum dried. It was cooked and fed to convalescent malnourished infants and small children with and without lysine supplementation. Apparent absorptions of protein were 73±5 and 74±6 % of intake, respectively. Fecal wet weights, dry weights, energy, and carbohydrate were all modestly but significantly higher for the nasha diets than from the casein control diets; fecal fat was not different. Two children received drum-dried nasha without further cooking: digestibilities were not different from those of the cooked product but biological value was much lower. It was concluded that when properly cooked and consumed along with small amounts of a good source of lysine, nasha is a satisfactory weaning food.

b. Solubility studies and identification of the pepsin-indigestible sorghum proteins. In this study, using the pepsin digestibility method, uncooked sorghum proteins were as digestible as uncooked maize proteins. After cooking, however, sorghum prolamines (kafirins), measured by the Landry-Moureaux protein fractionation procedure and sodium dodecyl sulfate - poyacrylamide gel electrophoresis, became much less alcohol soluble and less pepsin-digestible than the prolamines of maize. This suggests that the kafirin proteins are forming complexes during cooking and that the complexed kafirin protein is less accessible to enzymatic attack.

c. Means of improving protein digestibility. A major finding in Year 6 has been the identification of two treatments which significantly improve the *in vitro* protein digestibility of sorghum. The first of these is a simple lowering of the pH of the flour/water suspension prior to cooking and

the second the addition of a reducing agent prior to cooking. When the pH of the suspension is reduced from 6.8 to 3.0 the corresponding *in vitro* protein digestibility of the cooked gruel increases from 51 % to 65 %, respectively. The West African preparation of acid tô, using tamarind extract to lower pH, also shows some improvement in digestibility compared to neutral or alkali tô preparations.

The addition of small amounts of a reducing agent, such as 2-mercaptoethanol, dithiothreitol, or sodium bisulfite, to the flour/water suspension before cooking results in little or no decrease in *in vitro* digestibility due to cooking. Protein digestibilities remain at the level of the uncooked flour and are comparable to digestibilities of other major cereals. Furthermore, addition of weaker reducing agents such as L-cysteine have a significant effect on maintaining adequate digestibility. Further *in vivo* studies are planned to relate these effects more directly to the human.

As the major action of reducing agents on proteins is to cleave disulfide bonds, it appears that the disruption of these intra- and/or intermolecular bonds is important to the digestibility of the sorghum proteins. When cooked sorghum proteins are applied on a gel in a non-reduced state, a large molecular weight protein complex that is unable to enter the gel can be seen. These complexed proteins are not present in the extracted uncooked sorghum. When the complexed proteins are reduced they readily enter the gel as smaller molecular weight units. It is, however, unclear at this time if these complexes are made up of only kafirin proteins or if they include other protein classes. Apparently the heating process alone is forming large molecular weight protein complexes which are bound by intermolecular disulfide bonds. The addition of the reducing agent to the sorghum/water suspension before cooking creates a reducing environment which prevents these protein complexes from forming. We are conducting further work to examine the role of this protein complex on the digestibility of the sorghum proteins.

2. Zinc and Iron Availability: A cooperative study has been conducted with the USDA Grand Forks Human Nutrition Research Center to assess the availability of zinc and iron in sorghum foods used in Africa. The foods examined were neutral, acid, and alkali tô from West Africa and fermented aceda from East Africa. The foods were prepared in a traditional manner using indigenous materials (tamarind and wood ash from Mali and starter

culture from the Sudan). The preparations were then extrinsically labeled with radioactive isotopes of zinc and iron and fed to rats. Analysis shows a significantly higher absorption of zinc in the fermented aceda gruel compared to the gruels or the control diet. High zinc absorption was correlated with lower phytate levels in the aceda.

3. Sudanese Sorghum and Millet Fermentation: A non-alcoholic fermentation is commonly used in Sudan for making many local sorghum foods such as nasha, aceda, and kisra. A "starter", prepared from sorghum or millet flour, is added to the food preparations to initiate the fermentation. We have shown in human feeding studies that nasha has about the same protein digestibility as gruels made from corn. Thus, we have initiated a study to examine and characterize the microbial population in the Sudanese "starter."

The starter was examined daily for two weeks for changes in the microbial population. Most of the isolated bacteria in the starter keyed out as heterofermentative Lactobacillus species. The isolated cultures were all gram-positive coccobacilli to rods, catalase and benzidine negative, and grew rapidly at 32° C. Work is presently continuing on the speciation of these isolates.

The starter was used to inoculate some new flour and the populations were monitored. The lactic acid bacterial population started at about 10^7 and increased to 10^9 after 18 hours at 32°C for both millet and sorghum. The yeast count in the starter remained about 10^4 and then it started to increase at about 36 hours when the bacterial count started to decrease. Colonies of lactic acid bacteria and yeasts were picked from the agar plates and are presently being identified by the use of biochemical tests.

The lactic acid bacteria and yeasts cultures were analyzed for their ability to degrade protein, sugars and starch. The isolates gave strong proteolytic reactions and most were highly fermentative in the sugars. None of the isolates were able to degrade starch which would be expected, as starch is needed for the structure of the food. The proteolytic reactions will be studied further to determine what the microorganisms are doing in the sorghum and millet as this seems to be an important aspect in the digestibility of these fermented grains.

Some enteric bacteria were also isolated from these sourdough starters and they have been tentatively identified as species of Shigella and

Enterobacter. These will also be evaluated to determine their role in the starter and in the improvement of the digestibility of the fermented sorghum. Once the microorganisms have been identified and characterized, they will be used to make pure culture to see if they will react in the sorghum in the same manner as the normal flora in the flour. The use of the pure culture fermentation will help to develop a controlled process for the commercial manufacturing of Kisra (a fermented flat bread).

Networking Activities

Research findings on protein digestibility have been shared with scientists at the Food Research Centre (Sudan) and the Cereal Quality Laboratory (Niger). At the request of host country scientists from the above laboratories, sorghum samples have been evaluated for food and nutritional quality in our laboratory. Results from these analyses have been shared with the host country scientists.

In cooperation with Dr. S. Elnafar M. Badi (Sudan), and Mr. M. Oumarou (Niger), equipment needs for their quality laboratories have been identified. The identified equipment will be provided by INTSORMIL and the Niger Cereal Research Project, respectively, in Year 7.

Scientific books have been provided for host country researchers at the Food Research Centre in Sudan. Additional books will be provided in Year 7 for the Sudan group.

Travel

International

- October 31 - November 12, 1984. A.W. Kirleis. Sudan. INTSORMIL Host Country EEP Review.

Domestic

- September 30 - October 4, 1984. A.W. Kirleis. Minneapolis, Minnesota. Attended American Association of Cereal Chemists National Meeting.
- December 18 - 19, 1984. A.W. Kirleis. Kansas City, Missouri. Attended and INTSORMIL Global Plan Meeting.
- February 19 - 22, 1985. A.W. Kirleis. Lubbock, Texas. Attended INTSORMIL Principal Investigators Conference.
- May 5 - 9, 1985. A.W. Kirleis. Philadelphia, Pennsylvania. Attended American Oil Chemists' Society National Meeting.

Publications and Presentations

Refereed Publications

Cagampang, G.B., A.W. Kirleis, and J.S. Marks. 1984. Application of small simple back extrusion test for measuring texture of cooked sorghum grain. J. Food Science 49:278-280

Cagampang, G.B., and A.W. Kirleis. 1984. Relationship of sorghum grain hardness to selected physical and chemical measurements of grain quality. Cereal Chem. 61:100-105.

Kirleis, A.W., K.D. Crosby, and T.L. Housley. 1984. A method for quantitatively measuring vitreous endosperm area in sectioned sorghum grain. Cereal Chem. 61:518-522.

Cagampang. G.B., and A.W. Kirleis. 1985. Properties of starches isolated from sorghum floury and corneous endosperm. Starch. 37:253-257.

Graham, G.G., W.C. Maclean, Jr., E. Morales, B.R. Hamaker, A.W. Kirleis, E.T. Mertz, and J.D. Axtell. 1985. Digestibility and utilization of protein and energy from nasha, a traditional Sudanese fermented weaning food. J. Nutr. In Press.

Hassen, M.M., E.T. Mertz, A.W. Kirleis, J.D. Axtell, and E. Villegas. 1985. Tryptophan levels in normal and high lysine sorghums. Cereal Chem. In Press.

Research Abstracts

Hamaker, B.R., and A.W. Kirleis. 1985. Characterization of cooked and uncooked sorghum proteins. Cereal Foods World. 30:548.

Lectures

Kirleis, A.W. 1985. "The influence of cooking on sorghum protein digestibility." Seminar sponsored by the Kellogg Company, Battle Creek, Michigan. May 17.

Kirleis, A.W. 1985. "Food uses of sorghum in Africa." Thirty-second Research Review Conference, Soft Wheat Quality Laboratory, Ohio Agriculture Research and Development Center, Wooster, Ohio.April 18-19.

Kirleis, A.W. 1985. "Potentials for improving the utilization of sorghum." International Agriculture Seminar, Purdue University. January 31.

Kirleis, A.W. 1985. "Sorghum Food Quality Evaluation." USAID Sponsored Diplomats at Purdue, Purdue University. April.

Changes in Year 7 Project Research Plans from Year 6

There are no major changes in the research plans for Year 6. The specific work plans for Year 7 are listed below:

1. Define the food quality characteristics of sorghum grain for making kisra (a staple fermented food in the Sudan).

2. Characterize the changes that occur in starch and protein components of sorghum grain during cooking as they relate to food quality.

3. Characterize those sorghum proteins which become indigestible upon cooking and determine the mechanism by which these proteins are altered by cooking.

4. Examine processes (e.g., extrusion cooking and fermentation) which result in improved protein digestibility and identify the mechanism(s) involved in this improvement.

Food and Nutritional Quality of Sorghum and Millet

Project TAM-26

Lloyd W. Rooney and R.D. Waniska

Texas A&M University

Institutions

Collaborating Host Countries and Investigators

Dr. O. Niangado, Plant Breeder; Mr. Maribou Konate, Sorghum Breeder; Dr. J. Scheuring, ICRISAT - MALI

Dr. K.V. Ramaiah, ICRISAT, Sorghum Breeder - Striga; Dr. S. Da, IBRAZ; Dr. C. Pattanayak, BURKINA FASO

Dr. D.S. Murty, R. Jambunathan, ICRISAT - INDIA

Dr. D. Meckenstock, HONDURAS

Dr. J. Clark and Mr. Omarou, Plant Breeder and Chemist - NIGER

Dr. Vartan Guiragossian, ICRISAT, Mexico

Ing. M. Sanchez Lucero, University of Sonora; Escobedo 149 Sur; Hermosillo, Sonora and Dr. S. Bedolla; Director, Masters of Science Program, Food Science & Technology; University of Sonora; Hermosillo, Sonora, Mexico

Dr. Octavio Paredes-Lopez; Centro de Investigaciòn y de Estudios Avanzados del IPN; Unidad Irapuato; Blvd. Gustavo Diaz Ordaz 237; Oficina 101; Apartado Postal 629; Irapuato, GTO, Mexico.

Ing. Helbert Almeida-Dominguez, Professor; Instituto Tecnologico de Merida; Merida, Yucatan.

Ing. Hector Cejudo Gomez; Cereal Quality Lab; INIA; Chapingo, Mexico.

Dr. Sergio Serna-Saldivar, Professor; Centro de Investigacion de Alimentos; University of Sonora; Hermosillo, Sonora, Mexico.

Dr. J.O. Akingbala, Professor; University of Ibadan; P.O. Box 1864; Ibadan, NIGERIA.

U.S.: Purdue University, Kansas State University, Mississippi State University

Linkages: Major efforts have been focused in Mali, Honduras and Mexico. These linkages have been established for several years and the work has been continued and expanded.

Ecogeographic Zones Most Benefited by Research

Africa, Latin America - The research on food quality cuts across most geographic areas and produces information, techniques, and concepts applicable to most countries of Africa, Latin and South America. The work in Mexico is a very cost efficient way of developing technology for Central America.

Objectives, Research Procedures, and Production/Utilization Constraints

Sorghum/Millet Constraints

Factors affecting food quality, processing properties, and nutritional value of sorghum/millet critically affect the significance of other attempts to improve the crops. If the grain cannot be processed and is not accepted for consumption, then the agronomic and breeding research has been wasted.

Year 6 Objectives

1. Determine how sorghums are processed, prepared, and consumed in traditional village foods and determine the grain characteristics that affect organoleptic properties of the traditional food products.

2. Develop simple, practical laboratory methods for use in breeding programs to assess important grain quality characteristics.

3. Determine physical, chemical, and structural factors that affect the food and nutritional quality of sorghum and seek ways of modifying the properties or improving methods of processing.

4. Determine the factors that affect resistance to grain molds and field deterioration in sorghum and devise laboratory procedures to detect genotypes with resistance.

Changes in Objectives from Previous Year

The objectives are broad-based and still cover the essential needs. Objectives 2, 3, and 4 have been pursued most vigorously. Objective 1 has been accomplished, except for additional observations to clarify exceptions to and variations from previous findings. Increased emphasis has been given to processing research on the sorghum, i.e., couscous and rice-like products. Millet research has been expanded.

Research Procedures

Procedures used to facilitate host country research have been to exchange samples of sorghum and millets and processed products for chemical,

physical, structural, and processing evaluation. In certain situations, research has been conducted in villages and tortillerias, and additional information has been obtained in our laboratory.

Problems Regarding Achievement of Objectives

Industrial tortilla production and evaluation of sorghum-maize mixtures has been hampered by lack of collaborators in Honduras. The cooking trials in the village households work well for final evaluation of advanced sorghum lines but cannot be used for large scale processing experiments. That is why the tortilla work in Mexico is of critical importance to our work in Honduras. The use of Mexico to develop information directly transferable to Central America is cost effective.

Project Output

Tortillas: Alkaline cooked sorghum products are consumed in Central America and potentially in Mexico. Work was continued to evaluate sorghum for use in tortillas and was expanded to atoles. Sorghums grown in a performance test at Choluteca, Honduras, by D. Meckenstock and colleagues, were evaluated in village cooking trials in Honduras and in the Cereal Quality Lab at Texas A&M University. Eight samples of sorghum were evaluated for cooking characteristics by a Honduran housewife and by Ms. C. Choto (Graduate Research Assistant - TAMU). The samples represented advanced materials and released cultivars of sorghum such as tortillero, Dorado, and Senta S-2. The protein content varied from 8.2 to 14.4% while starch varied from 71.0 to 81.2% (dry weight). The "apparent" amylose content varied from 19.9 to 25.6% of the starch. The variation in composition probably reflected the variable grain yields obtained in the nursery. The grains varied in density and hardness but all had intermediate kernel texture, thin white pericarp, and tan plant color (Senta S-2 had purple plant color). The Senta S-2, with purple plant color, had highly colored tortillas which confirmed the advantages of tan plant color. The pericarp of the eight sorghums varied significantly in the relative ease of pericarp removal during alkaline cooking even though the sorghums had thin to intermediate thickness. Tortillero had the pericarp that most strongly adhered to the grain which caused it to have the longest cooking time in the Honduran trials. The data clearly suggest that ease of pericarp removal during alkaline cooking varies among kernels with similar pericarp thicknesses.

The laboratory cooking trials and the cooking trials in Honduras ranked the extremes similarly; but, within the intermediate samples, considerable differences in ranking occurred. These trials suggested that a few modifications were needed to improve the laboratory evaluation procedure to more closely mimic the processes used in Honduras. They confirmed, however, that the laboratory procedure was useful and did relate to consumer evaluation. A better method of determining optimum cooking time is required to enable more accurate evaluation of sorghums for tortillas.

In another study, the protein content of 18 sorghum grain samples grown in the Advanced Performance Nursery in Choluteca, Honduras, varied from 8.2 to 15.5% (dry weight basis). Density varied from 1.34 to 1.40 g/cc. These sorghum lines have been planted in trials at Lubbock, Texas, to produce quantities of grain for tortilla quality evaluation in the laboratory.

Commercial Sorghum Tortilla Trials: Previous research in our laboratory has shown that white sorghum and pearled red and white sorghum could be substituted for all or part of the maize to produce acceptable tortillas. The research has been extended to commercial Mexican tortillerias through a collaborative project with the University of Sonora in Hermosillo, Mexico. Mexican white sorghum and red sorghum, pearled in our laboratory to remove 14% of the initial weight, was made into tortillas in a commercial tortilleria in Hermosillo by Dr. Bedolla and his students. These studies must be considered preliminary; but, in general, sorghum and pearled sorghums require reduced cooking time and can be ground into masa and made into tortillas without major modifications in commercial equipment. The procedures must be altered some to avoid overcooking of the sorghums. High levels of lime caused increased color of tortillas from sorghum. Tortillas from white sorghums with purple plant color apparently increased in color after baking. Blends of pearled sorghum cooked with or blended with commercial maize can be milled using the commercial stone grinder. The tortillas produced have a slight pink color, compared to excellent white maize tortillas. However, tortillas in Mexico are usually off-white and even the 100% pearled red sorghum tortillas were purchased by consumers. The white sorghum had purple plant color which stained the pericarp and produced tortillas with significantly more color than the pearled red sorghum. These studies will continue with tan plant white sorghums and with pearled red and white sorghums.

The owner of the tortilleria is the president of the Association of Tortilla Makers in Sonora. He continues to cooperate with Dr. Bedolla because he is interested in an alternative for maize. The facilities, the interest of a commercial tortilleria owner, the availability of trained scientists and willing students make this work with the University of Sonora extremely cost effective, and it is almost directly applicable in Central America.

Atole from Sorghum and Maize: Atole is a thin porridge consumed in Mexico and Central America for breakfast. It is commonly produced from maize; although at times, sorghum is used in Honduras. A food quality white sorghum and white maize were made into atoles and compared to commercial maize atoles from Mexico. Roasted, nixtamalized and steeped maize and sorghum atoles were prepared using traditional processes. The physical, chemical, and organoleptic characteristics of the flours and atoles were compared. In general, sorghum and maize atoles were comparable in flavor, especially for roasted and nixtamalized atoles. Steeped maize atole was definitely better than steeped sorghum atole. Consistency of the atoles was affected by starch content, extent of starch gelatinization and dextrinization. The data indicate that atoles from a tan plant white kernel sorghum are acceptable, especially when they are roasted or highly flavored to overcome the bland flavor of sorghum.

Couscous Preparation and Factors Affecting Its Quality: A laboratory procedure for preparation of couscous from sorghum was developed by M. Galiba (Senegalese graduate student) and his wife. Sorghum was decorticated using the PRL mini dehuller or a modified barley pearler depending upon quantity of grain. The decorticated grain was ground to pass through a screen used for couscous flour in Senegal. The flour was agglomerated by addition of water and the particles were steamed, using a standard procedure. Couscous properties were evaluated for 17 sorghum cultivars grown at each of three locations and for six cultivars representing a wide range in endosperm texture and other characteristics. In addition, two sorghums and two millets obtained in a grain market in West Africa were evaluated to standardize the method.

The major factor affecting couscous quality of sorghum appears to be the decortication or milling properties. Sorghum flour from soft sorghums appears to take up water and swell more than the hard sorghum flours.

However, the difference is not very significant especially since the soft, floury sorghums were difficult to decorticate and yields of flour were greatly reduced. The couscous processing method was sensitive enough to consistently indicate that a heterowaxy sorghum grain consistently produced sticky couscous with poor texture and other unacceptable properties. Thus, for all practical purposes, sorghum for couscous production should have good decortication and milling properties with a white pericarp and tan plant color. Color of couscous is also affected by the mucilages added to it during steaming. Couscous from red sorghums may be quite acceptable. Thus, sorghum couscous quality can be evaluated by selecting for good milling properties which are, in general, directly related to grain hardness. It is possible that minor differences in couscous properties of some flours exist so samples of promising lines should be evaluated prior to release to insure that they have acceptable quality.

Sorghum Nutritional Value: Factors relating to the increased availability of the starch and protein in sorghum after it has been anaerobically stored at 30 to 35% moisture for up to 21 days were evaluated. In addition, the effect of aerobic steeping prior to anaerobic storage was determined. The chemical and physical modification of the grain was greatly accelerated by aeration during steeping followed by anaerobic storage. The particle size of aerobically steeped grain (24 hours) stored anaerobically for five days equaled that of high moisture grain anaerobically stored for 21 days. The combination of aerobic steeping, which initiates germination, followed by anaerobic storage causes sufficient breakdown of the endosperm structure of the sorghum kernel to improve the availability of the sorghum protein and starch. This information provides additional evidence relating to the increased nutritional value and better food quality of malted or fermented sorghum foods. It is common practice for many traditional foods to soak the sorghum prior to or after milling during food preparation. This destroys the integrity of the sorghum kernel structure or the granular, gritty milled particles and improves the texture of the product. Hammermilling of dry sorghum produces a very gritty food product because of the integrity of the sorghum subaleurone or peripheral endosperm cells.

Nutritional Value of Alkaline Cooked Maize and Sorghum: The effect of lime treatment on nutrient digestibilities of maize, sorghum, and pearled sorghum (10% of initial weight removed) was determined with growing pigs,

rats, and *in vitro* tests. The digestibilities were determined at the end of the small intestine and over the total digestive tract of the pigs. Dry matter, gross energy, and protein digestibilities were significantly higher for the maize and pearled sorghum than for whole sorghum which was 92% of that of maize. Pearling significantly decreased the levels of lysine and other essential amino acids; but the dry matter, protein and gross energy digestibilities were improved significantly by pearling. The alkali cooking decreased the lysine digestibility at the terminal ileum by five percentage points for sorghum and maize. The reduction in lysine digestibility observed in the lime-treated groups accounted for the significant differences in nitrogen (N) retention/N intake and N retained/N absorbed. The major significant findings were that the nutritional value of sorghum tortillas and related lime-cooked products was quite comparable with similar maize foods. Sorghum can be substituted for part or all of the maize without adversely affecting the nutritional level for consumers. Sorghum, in general, has about 95% the nutritional value of maize for livestock, and that appears true for tortillas and other lime cooked foods as well. Pearled sorghum has nutrient digestibilities equal to or better than maize; but the lysine content is decreased so it has lower nutritional value. The substitution of sorghum for all or part of the maize in tortillas should not cause any major nutritional problems. Both maize and sorghum require a high protein quality supplement to meet the amino acid requirements of livestock and humans.

Research Progress

Sorghum Nontannin Phenols: The location, kind, and quantity of nontannin phenolic compounds in sorghum and millets has been under evaluation using high performance chromatography and light, fluorescence and scanning electron microscopies. The phenolic acids may play important roles in the relative resistance of sorghums to disease and insects in addition to affecting food quality. We have found significant levels of at least 19 different components including gallic, protocatechuic, p-hydroxybenzoic, vanillic, caffeic, syringic, p-coumaric, sinapic, ferulic, and cinnamic acids which were tentatively identified. Many of the compounds identified inhibit microbial spore germination and mycelial growth which could affect molds that attack sorghum grain. Varieties of sorghums differed significantly in the kind and quantities of phenolic acids present; but so

far, no specific correlations have been made between disease and insect resistance and phenolic acid content. This work is designed to determine why sorghums without condensed tannins have resistance to molds.

The total phenols and phenolic acids differ markedly in content and kind inside the sorghum kernel. Free or easily extractable phenols are located in the pericarp of the kernel and the glumes and stem of the plant. The bound phenols, those that must be extracted after either acid or base hydrolysis, were composed mostly of ferulic acid which is located in the cell walls. For example, the pure endosperm of sorghum did not contain any measurable free phenols. The bound phenols were composed of caffeic, p-coumaric, sinapic, ferulic acids and three unidentified peaks. Ferulic acid comprised more than 60% of the total phenolic acids and was present in all sorghum endosperms analyzed, which confirms our fluorescence microscopy which has documented strong autofluorescence in the cell walls of sorghum. Inhibition studies were conducted with phenolic compounds and extracts from sorghum tissues. Alpha-amylase and glucoamylase were evaluated using a viscometric and an enzymatic analysis method, respectively. The ability of alpha-amylase to hydrolyze starch decreased in the presence of the pericarp of sorghum grain (about 15%) and in the presence of polymerized polyphenolic compounds or tannins (about 67%). Compounds in the pericarp of nontannin sorghums inhibited the hydrolysis of starch by glucoamylase, i.e., 22% for Group 1 sorghums. Ferulic and coumaric acids inhibited the activity of yeast by 25% at 100 and 300 ppm, respectively. Quebracho (tannins) had no effect on the activity of yeast at concentrations up to 1000 ppm. These model systems indicate that sorghum tissues and extracts from sorghum tissues contain sufficient phenolic compounds to inhibit enzymatic and microbial activities.

These studies on the nontannin, low molecular weight phenols of sorghum will be continued to provide additional information on the factors affecting insect and disease resistance. Bioassays to determine the biological activity of major phenolic acids have shown ferulic acid inhibits germination of microbial spores. Studies of the changes in nontannin phenolic acids and phenols when sorghums are inoculated with molds and spores at anthesis are underway. The structure of the kernel, plant color, panicle morphology, and other factors critically affect molding and deterioration of sorghums. However, the nontannin phenols may play a

significant role in mold resistance, color of food products and other sorghum properties.

Sorghum Structure: Bright field, polarizing, fluorescence, and scanning electron microscopies were used to determine changes in the developing caryopsis of Group I, II, and III sorghums. At anthesis, the Group II and III sorghum "kernels" contained pigmented material in the inner integument cells. For the Group I sorghums, no pigmented cells were observed in the inner integuments. A major difference occurred in the way the pigmented layer developed in Group II and III sorghums. The Group II sorghum had many small vesicles scattered throughout each cell and additional pigmented material was deposited during kernel development until the layer appeared quite solid. In contrast, the Group III sorghum formed pigment-containing vesicles associated with the cell wall. The vesicles eventually filled with pigment forming a continuous pigmented layer. For the Group II sorghum, brown pigment appeared in the pericarp between 22 to 26 days after anthesis. The difference between the Group II and III sorghums may explain why the tannins of Group II sorghums must be extracted using acidified methanol. Additional studies will confirm these observations.

Structure, Composition, and Processing Properties of Millet: Kernels of 22 varieties of P. millet from Niger, Mali, Togo, and Burkina Faso have been evaluated for structure, composition, and some processing properties. In general, P. millet kernel structure was similar to sorghum but did have some differences of major significance. The pearl millet epicarp was much thicker with larger, blockier cells containing thicker cell walls than sorghum. In tan and brown appearing P. millet kernels, orange and brown pigments were present in the epicarp and mesocarp while no pigments were observed in the pericarp of blue-grey appearing P. millets. All P. millet kernels had a pigmented testa present. P. millet kernels appeared to have a discontinuous testa that was pigmented and caused the blue-grey color. Kernel size, shape, and arrangement of the germ in P. millet kernels affected dry processing properties significantly. The phenol content of P. millet grains ranged from 0.13 to 0.30 mg/100 mg for an array of grain samples. No condensed tannins were found in the grain of P. millet. The phenolic acids of P. millet, tentatively identified, were protocatechuic, gentisic, p-hydroxybensoic, vanillic, caffeic, syringic, p-coumaric,

ferulic, sinapic, and cinnamic, plus several unidentified components. Ferulic acid was a major component of the phenolic acids of P. millet and appears to be located in cell walls, similar to sorghum.

The structure of finger millet (E. corocana), proso millet (P. milaceum), fonio (D. exilis), tef (E. tef), and foxtail millet (S. italica) was compared with the structure of P. millet and sorghum. These millets are useful food crops in many areas and will continue to be characterized. Additional information on the factors affecting the visual appearance and color of P. millet grain is required to confirm these observations.

Extrusion, Milling, and Other Processing: The dry milling, tortilla cooking, and Tô making properties of sorghum advanced lines and progeny from crosses designed to improve grain yields are evaluated on a continuing basis. For example, the alkali test has been used to select for white sorghums with hard endosperm and low pigmentation for several years. A number of the sorghum lines from that selection procedure look extremely promising.

New sorghum hybrids with tan plant color, white pericarp and with and without waxy endosperm have excellent processing and food properties. They are being extruded and evaluated for use in different processed foods. Changes in nutritional value, starch and other constituents are being examined. The development of highly acceptable sorghum and millet food products could improve the image of sorghum and millet grain.

Networking Activities

The project focuses on developing a series of collaborative efforts in Mexico and Honduras to evaluate sorghum quality for Central and Latin America. Another network relating to sorghum and millet food use in West Africa is being developed through interactions in Mali, Niger, Burkina Faso, and Senegal. The project interacts with sorghum improvement programs in all areas of the world through a consistent stream of international visitors, short-term trainees, correspondence, exchange of samples, and participation in conferences, workshops and other activities.

Samples of food sorghum have been processed and sent to industrial food companies in Mexico, Latin America, and the United States. The food sorghums have made a favorable impression on those companies trying them.

Several hundred kilos of pearled red sorghums and white food sorghums have been sent to the University of Sonora, Hermosillo, Mexico, for tortilla trials and pearled red sorghum (700 kilos) was sent to the Food Technology Research Center, Chihuahua, Mexico, for low cost extrusion research on sorghum. Investigators at the University of Sonora have been supplied with small items of equipment, chemicals, and supplies to expedite the research on sorghum food use. Short courses and seminars have been presented at the University of Sonora on sorghum utilization and nutritional value. Dr. Bedolla and Dr. Serna-Saldivar were trained in our INTSORMIL project and provide key leadership in Mexico.

Sorghum quality for Tô and couscous are the focus of collaborative research based in Mali and backstopped by graduate students working with Dr. Miller and Dr. Rooney in their laboratories. Millet quality research is being expanded.

Travel

- August 16 - 24, 1984. Ms. C. Choto-Owen, Graduate Research Assistant. Traveled to Choluteca, Honduras, to assist Dr. D. Meckenstock in village cooking trials using sorghum in tortillas.
- September 9 - 16, 1984. Mr. S. Serna-Saldivar, Graduate Research Assistant. Traveled to the University of Sonora at the invitation of Dr. S. Bedolla, to present a series of ten seminars on Food Science & Technology emphasizing sorghum nutritional value and processing quality for food and feed.
- October 21 - 27, 1984. S. Serna-Saldivar, Graduate Research Assistant. Traveled to Monterrey, Mexico, to participate in the First Mexican National Meeting on Sorghum sponsored by the Agronomy Faculty of UANL with the National Council of Science & Technology, the National Agricultural Research Institute, ICRISAT, and CIMMYT. S. Serna-Saldivar presented two papers on the nutritional value of alkaline-cooked sorghum.
- March 13 - 22, 1985. L. W. Rooney. Traveled to Mali, West Africa, for collection of P. millet samples, consultation and planning of collaborative work with Malian scientists and ICRISAT personnel.
- June 2 - 8, 1985. L.W. Rooney. Traveled to Sonora, Mexico, to review the INTSORMIL research project being conducted by Dr. S. Bedolla and

colleagues. Presented a lecture to students and staff in the food science program. Conducted cooking trials with sorghum and decorticated sorghum in a commercial tortilleria with Dr. Bedolla's students and staff. We planned for additional trials with white tan plant colored sorghums and for low-cost extrusion of sorghum and decorticated sorghums.

- September 9 - 12, 1984. L.W. Rooney. Traveled to Purdue University in West Lafayette, Indiana, to present a summation of Project TAM-26 to INTSORMIL External Review Panel members.
- September 28 - October 3, 1984. L.W. Rooney. Traveled to Minneapolis, Minnesota, to participate in the American Association of Cereal Chemists Round Table Starch Conference and Annual Meeting. Seven of our students and personnel presented poster papers or technical presentations. Conferred with scientists from around the world.
- September 29 - October 5, 1984. Ms. C. Choto-Owen, Graduate Research Assistant; Ms. N. Vivas-Rodriguez, Graduate Student; and Mr. R. Pflugfelder, Graduate Research Assistant. Traveled to Minneapolis, Minnesota, to present poster sessions at the American Association of Cereal Chemists Annual Meeting. The papers were on sorghum food quality.
- February 17 - 20, 1985. Dr. R.D. Waniska, Assistant Professor; Ms. C. Choto-Owen, Graduate Research Assistant, and Ms. C. Earp, Research Associate. Traveled to Lubbock, Texas, to present papers on sorghum at the 14th Biennial Sorghum Grain Research and Utilization Conference.
- February 17 - 21, 1985. L.W. Rooney. Traveled to Lubbock, Texas, to participate in the 14th Biennial Sorghum Grain Research and Utilization Conference and to chair the sessions on grain utilization. Subsequently, participated in the INTSORMIL Planning Conference, presenting a summary of future plans for utilization research. Rooney was presented with the Sorghum Producers Sorghum Utilization Award.
- June 10 - 14, 1985. L.W. Rooney. Traveled to IFT Food Exposition in Atlanta, Georgia, and to the University of Georgia in Athens to participate in a workshop on utilization research of CRSP's from beans and cowpeas, nutrition, peanuts, and sorghum/millet. Represented INTSORMIL at that workshop by presenting an overview of the INTSORMIL program.

Publications

Refereed Articles

Choto, C.E., M.M. Morad, and L.W. Rooney. 1985. The quality of tortillas containing whole sorghum and pearled sorghum alone and blended with yellow maize. Cereal Chem. 62(1):51-54.

Hahn, D.H. and L.W. Rooney. 1985. Effects of genotype on tannins and phenols of sorghum. Cereal Chem. In press

Pflugfelder, R.L., L.W. Rooney, and L.M. Schake. 1985. The role of germination in sorghum reconstitution. Animal Feed Sci. & Tech. In press.

Hahn, D.H., L.W. Rooney, and C.F. Earp. 1984. Tannins and phenols of sorghum. Cereal Foods World. 29(12):776-780.

Morad, M.M., C.A. Doherty, and L. W. Rooney. 1984. Effect of sorghum variety on baking properties of U.S. conventional bread, Egyptian Pita "Balady" bread, and cookies. J. Food Sci. 49:1070-1074.

Morad, M.M., C.A. Doherty, and L.W. Rooney. 1984. Utilization of dried distiller grain from sorghum in baked food systems. Cereal Chem. 61(5):409.

Dissertations and Theses

Earp, C.F. 1985. Microscopy of the mature and developing caryopsis of *Sorghum bicolor* (L.) Moench. Ph.D. Dissertation. Texas A&M University. College Station, Texas.

Vivas-Rodriguez, N.E. 1985. Thin porridges (atoles) prepared from maize and sorghum. Master of Science Thesis. Texas A&M University. College Station, Texas.

Ring, A.S. 1984. Phenolic compounds in sorghum from boot stage to post harvest maturity by Folin-Ciocalteau and high pressure liquid chromatography methods. M.S. Thesis. Texas A&M University, College Station, Texas.

Serna-Saldivar, S.O. 1984. Nutritional evaluation of sorghum and maize tortillas. Ph.D. Dissertation. Texas A&M University, College Station, Texas.

Adams, S.D. 1985. An examination of moisture adsorption and flake quality characteristics of grain sorghum using scarification and surfactant treatments. Masters of Agriculture Professional Paper. Texas A&M University. College Station, Texas.

Abstracts

Choto-Owen, C.E., D.H. Meckenstock, and L.W. Rooney. 1985. Sorghums for tortillas in Central America. 14th Biennial Sorghum Research and Utilization Conference. SICNA. Lubbock, Texas.

Earp, C.F. 1985. Changes in structure of the sorghum kernel during development with fluorescence and scanning electron microscopy. 14th Biennial Sorghum Research and Utilization Conference. SICNA. Lubbock, Texas.

Galiba, M. et al. 1985. Cous Cous quality evaluation in sorghum. 14th Biennial Sorghum Research and Utilization Conference. SICNA. Lubbock, Texas.

Raab,Q.J., Jr., F.R. Miller, and L.W. Rooney. 1985. Genes affecting pericarp color and polyphenols in sorghum - a review and update. 14th Biennial Sorghum Research and Utilization Conference. SICNA. Lubbock, Texas.

Waniska, R.D., C.A. Doherty, C.F. Earp, and L.W. Rooney. 1985. Phenolic compounds in sorghum kernels at anthesis through maturity. 14th Biennial Sorghum Research and Utilization Conference. SICNA. Lubbock, Texas.

Choto-Owen, C.E. and L.W. Rooney. 1984. Effect of pericarp thickness and environment on sorghum tortilla quality. Cereal Foods World. 29(8):495.

Doherty, C.A., R.D. Waniska, and L.W. Rooney. 1984. Alcohol production from sorghum - enzyme inhibition studies. Cereal Foods World. 29(8):495.

Hahn, D.H., L.W. Rooney, and A.J. Bockholt. 1984. The effect of phenols on the color of maize and sorghum tortillas. Cereal Foods World. 29(8):495.

McDonough, C. and L.W. Rooney. 1984. A structural comparison of several varieties of pearl millet (Pennisetum americanum). Cereal Foods World. 29(8):495.

Pflugfelder, R.L., L.W. Rooney, and R.D. Waniska. 1984. The effects of malting on sorghum starch properties. Cereal Foods World. 29(8):495.

Raab,Q.J., Jr., F.R. Miller and L.W. Rooney. 1984. Relationship of genes affecting pericarp color and polyphenols in the caryopsis of Sorghum bicolor (L.) Moench. Agronomy Abstracts.

Serna-Saldivar, S.O., D.A. Knabe, L.W. Rooney, and T.D. Tanksley. 1984. Effect of lime treatment on nutrient digestibility of cooked maize, whole sorghum, and pearled sorghum using cannulated swine as model animal. Cereal Foods World. 29(8):495.

Vivas, N.E., R.D. Waniska, M.M. Morad, and L.W. Rooney. 1984. Development of a flour for thin porridges (atole) using dry milling and roasting. Cereal Foods World. 29(8):512.

Proceedings

Rooney, L.W. 1985. Sorghum food improvement - international implications. International Committee, American Seed Trade Association. College Station, Texas. April 25, 1985.

Rooney, L.W. 1985. Food and nutritional quality of sorghum. Pages 131-139 in: Fighting Hunger with Research - A Five-Year Technical Research Report of the Grain Sorghum/Pearl Millet CRSP. INTSORMIL. University of Nebraska, Lincoln, Nebraska.

Rooney, L.W. 1985. Sorghum food quality improvement. Zimbabwian exchange visitors hosted by Tomball Chamber of Commerce. Tomball, Texas. The visitors were prominent farmers, politicians, and a sorghum beer brewer and processor.

Rooney, L.W. 1984. Sorghum utilization in traditional foods. Proceedings of the 1984 International Cereal Chemistry Congress. Vienna, Austria.

Serna-Saldivar, S.O. and L.W. Rooney. 1984. Nutritional value of lime-cooked sorghum and maize. Presented: First Mexican National Meeting on Sorghum. Monterrey, Mexico. October.

Serna-Saldivar, S.O. and L.W. Rooney. 1984. The actual and potential use of sorghum grain. Presented: First Mexican National Meeting on Sorghum. Monterrey, Mexico. October.

Changes in Year 7 Objectives

Try to do more research on P. millet quality by diverting resources from sorghum to millet.

Socioeconomics

Executive Summary

Studies in Mexico documented the "miracle" of increased sorghum production with hybrids from Texas. The studies noted the shift from maize to sorghum in farming systems and the need for sorghum adapted to marginal areas.

On-farm trials in the Dominican Republic indicated that sorghum is technically feasible, compatible with the conventional farming system, and less risky than maize. It is acceptable as food in traditional dishes, and as feed for animals.

Research in Sudan showed substantial change in agriculture, especially in new seeds tried. There was high interest of farmers in earlier maturing and high yielding varieties as well as those with greater disease and pest resistance. Needs include strengthened radio communications and better integration of research and extension. Women extension agents or assistants are needed. (UK-1 & 2)

While it is clear that grain sorghum is technically feasible in the Philippines, its economic feasibility remains uncertain. Work during Year 6 laid the groundwork for an economic assessment of sorghum production and marketing activities. Research to follow will employ economic-engineering procedures in analyzing costs and risks associated with sorghum production and market structure approach in evaluating the performance and needs of the feed grains marketing system. (NU-17)

The agronomic constraints found to be most binding in a study of three African countries are water shortages and low soil fertility. A variety of new technologies have been considered which address these problems. In Burkina Faso, tied ridges permit water conservation and increased levels of fertilization. In both Burkina Faso and Niger, increased fertilization is seen as the means by which farmer responses to increased prices will lead to increased production. In the Sudan, a new hybrid sorghum, which is adapted to that harsh environment, has the potential to lead to increased production if the economic incentive to adopt the variety exists.

Whole farm modeling based on linear programming points to seasonal labor shortages as one crucial economic constraint limiting the adoption of these new technologies. In the case of tied ridges in Burkina Faso, labor demand during the first weeding period determines the extent to which this

technology is adopted. In that period, the value of labor to the family farm is roughly ten times average wage rates during the year, but labor is neither bought nor sold. Similar seasonal labor constraints are key to land utilization and technology adoption in Niger and Sudan. (PRF-5)

Role of Sorghum, Including Nutritional Implications, in Mexico, the Dominican Republic, and Sudan

Project UK-1 and 2

C. Milton Coughenour, Larry Burmeister, Larry Busch, Billie R. DeWalt, Kathleen DeWalt, and William Lacy

University of Kentucky

Other Researchers

Principal Investigators - Host Country

David Barkin, Department of Economics, Universidad Autonoma Metropolitana, Mexico

Guillermo Perez Jeronimo, Department of Agronomy, Universidad Autonoma Metropolitana, Mexico

Fernanco Cruz, Instituto Hondureno de Antropologia e Historia, Honduras

Blanca Suarez, Centro de Ecodesarollo, Mexico

Jaime A. Matus Gardea, Director del Centro de Economia, Institucion de Ensensanza e Investigacion en Ciencias Agricolas, Mexico

Other U.S. Researchers

Paul Marcotte, Research Assistant

Saadi Nazhat, Research Assistant

Elizabeth Adelski, Research Assistant

Other Host Country Researchers

Pedro Vargas Gonzalez de Salcedo

Hugo Ortiz Martinez

Valentin Niembro Dominquez

Rosalia Gonzalez Ramirez

Jose' Colli Misset

Uriel Sanchez Modesto

Oscar San German Alanis

Marco Antonio Callejas Fuentes

Gloria Quintero Buchelli

Abdel Rahman Ahmed

Muktar Mohammed Ahmed

Ahmed Yagoub Elzack

Afaf Hassan
Widad Abt el Mutaal
Mohammed Ali

Summary

Research in Mexico is aimed at understanding the human component of sorghum production and use by small farmers in four regions and the role of sorghum nationally. Studies in Year 6 (a) documented the "miracle" of increased sorghum production with hybrids from Texas, (b) noted the shift from maize to sorghum in farming systems (c) the need for sorghum adapted to marginal areas, and d) called attention to the shift from farm operator to credit officer in farm level decision-making responsibility.

The main purposes in the Dominican Republic are to describe the farming systems where sorghum is grown under irrigation and in a semiarid area where it might be included in the cropping system. In the latter area, on-farm trials indicated (a) sorghum is technically feasible, (b) is compatible with the conventional farming system, (c) is less risky than maize, (d) is acceptable as food in traditional dishes, and (e) is used as feed for animals.

In Sudan, research is aimed at documenting recent changes in rainfed agriculture, the process of change, and the acceptance and knowledge of Tareke Berhe's on-farm trials. Studies showed (a) substantial change in agriculture, especially in new seeds tried, despite a lack of agricultural research for rainfed-area farmers, (b) high interest of farmers in earlier maturing and high yielding varieties as well as those with greater disease and pest resistance, (c) the need for strengthened radio communications, (d) need for better integration of research and extension, (e) need for better use of periodic markets in contacting farmers, (f) need for women extension agents or assistants, (g) and the need for strengthened capacity to supply good quality seed. The studies indicated general acceptance of on-farm trials by cooperating farmers, but relatively little is known about other farmers trying the new seeds due to the low success of trials during drought.

Institutions

Collaborating Host Countries: Mexico: Universidad Autonoma Metropolitana, Instituto Nacional de Investigaciones Agricolas (INIA), CIMMYT, and ICRISAT. Honduras: Instituto Hondureno de Antropologia e Historia (IHAH), Ministerio de Recursos Naturales (MRN), and Consejo Latinoamericana de Investigadores en Sorgo (CLAIS). Dominican Republic: Ministry of Agriculture, Instituto Superior de Agricultura, and Project Marena. Sudan: WSARP, Kordofan Ministry of Agriculture and Natural Resources, and Kordofan Bureau of Statistics.

U.S.: University of Kentucky, Texas A&M University, and Kansas State University.

Linkages:

- Mexico - The MOU involves INTSORMIL and Universidad Autonoma Metropolitana and a MOU is under development with INIA. There is collaboration with CIMMYT and ICRISAT researchers. Under consideration to facilitate research on the Mexican research system are linkages with the Consejo Nacional de Ciencias y Technologia, Institucion de Enseranza e Investigacion en Ciencias Agricolas, and the Instituto Nacional de Investigaciones Pecuarias, and Instituto Nacional de Investigaciones Agricolas.
- Honduras - The MOU involves INTSORMIL and the Instituto Hondureno de Antropologia e Historia (IHAH) and the Ministerio de Recursos Naturales (MRN). An MOU with the Instituto Interamericana de Cooperacion en Agricultura in Costa Rica facilitates sharing information applicable to farming systems in Central America and the Caribbean. Informal collaboration exists with CATIE and CLAIS to facilitate information sharing.
- Dominican Republic - The MOU is with Secretary of Agriculture for the D.R. Informal contacts also involved CESDA at San Cristobal, ISA, the Programs and Planning Unit, Ministry of Agriculture. These ties should be strengthened.

Ecogeographic Zones Benefited Most by Research

1. Central America, Mexico, and Caribbean
2. South America
3. East Africa

Objectives, Research Procedures, and Production/Utilization Constraints

Sorghum/Millet Constraints

Dominican Republic - Production of sorghum by farmers in favorable ecological zones is constrained by lack of (a) knowledge of sorghum production including appropriate varieties, (b) seed and other inputs, (c) the marketing system, and (d) a satisfactory price policy for sorghum.

Sudan - (1) Sorghum utilization in the traditional sector is constrained by lack of early maturing, high yielding varieties with grain quality equal to traditional varieties. (2) Constraints to rapid acceptance of innovations include a lack of (a) literacy, (b) radio communications, (c) vehicular transport, (d) number of on-farm trials, (e) seed supply, (f) trust in seed quality provided by merchants, (g) integration of research and extension, (h) training of extension agents, (i) contacts between men and women farmers and male extension agents and women farmers, (j) communication linkages between ethnic/tribal groups, (k) credit for inputs, and (l) information sharing by farmers who privately acquire new seeds.

Year 6 Objectives

1. With respect to research on farming systems in Mexico, specific objectives were to (a) analyze the impact of competing uses for farm production on prices and of world market and support prices on farmer's costs, (b) determine agronomic constraints to sorghum production for human food, and (c) determine the nutritional implications for families who have switched from maize to sorghum.

2. In the Dominican Republic, the specific objectives of the farming systems component was to (a) create baseline data on two limited resource areas in which sorghum is being introduced, (b) identify the constraints to sorghum production for food, and (c) assess sorghum as a risk aversion strategy.

3. In the Sudan, research focused on the general objective of studying constraints to communication and acceptance of innovations. The specific objectives included determination of (a) innovations recently accepted by farmers and the desired characteristics, (b) the social/communication networks by which innovations have spread between and within villages, and (c) the knowledge of sorghum possessed by farmers.

Changes in Objectives from Previous Year

Research in the Dominican Republic involved on-farm trials of sorghum for food which had not been attempted under this project in other locations. In Sudan, the research was new, although the objectives have been part of the project from the beginning.

Research Procedures

The procedures at all sites included collection of secondary data and interviews with informants with representative samples of farmers in five Mexican and two Dominican Republic communities. In the Sudan, a diagnostic survey was initially conducted in 15 communities followed by intensive study of social networks in one small and one large village.

Problems Regarding Achievement of Objectives

With respect to the objectives of studying farming systems and the acceptance of sorghum in the Dominican Republic, the lack of a formal connection with one of the research centers increased the difficulty of the field survey and collection of the verification data.

There were no major difficulties in conducting research on farming systems in Mexico or communication networks and change in agriculture in Sudan. However, uncertainty regarding the appropriateness of research in Mexico has inhibited development of collaborative relationships with Mexican institutions to conduct studies of the research system under objective two of our project.

Project Output

Research Findings

1. With respect to Mexico, sorghum (a) has become the third largest crop with a 1300 percent increase in area planted since 1958 and yields of 3 metric tons per hectare. Adoption of United States hybrids has had a major impact. (b) Yet, Mexico imported 2.25 million tons in 1981. (c) Most sorghum is grown for animal feed. (d) Farmers have substituted less risky sorghum for maize and wheat in their cropping systems. (e) The substitution of feed for food crops raises nutritional issues, but it may be possible to use sorghum in tortillas.

2. In the Dominican Republic, sorghum production on small, limited-resource farms is (a) technically feasible in certain ecological zones, (b)

compatible with conventional intercropping patterns, (c) less risky than maize, (d) acceptable as food when used in traditional dishes, and (e) is used for animal feed.

3. Farmers in the rainfed area of central North Kordofan (a) have experimented with a large number of new seeds in recent years, including nine new sorghum varieties. (b) Principal interest of both men and women farmers is in earlier maturing and high yielding varieties that help cope with shorter growing seasons, and (c) have grain quality equal to the traditional (baladi) varieties of sorghum and millet. (d) Bird and pest resistance characteristics also are desired. (e) To strengthen the communication of information to farmers, improvements are needed in radio signal power, the integration of research and extension operations, use of periodic farmer markets as a means of contacting farmers, and extension methods for contacting women farmers and members of diverse ethnic groups. (f) The supply of good quality seed is inadequate. (g) Acceptance by cooperating farmers of Berhe's farm trials is relatively low due to drought and the low success rate of the trials.

Research Progress

As a result of research on sorghum production in Mexico, the emphasis in agrobiological research has shifted toward sorghum for human consumption. INIA, with INTSORMIL collaboration, has begun to breed sorghums suitable as human food, and development of processing techniques is underway. Secondly, research to develop sorghum culture for marginal lands and limited-resource farmers is being conducted.

Completion of verification trials in the Dominican Republic should strengthen conclusions on the potential use of sorghum for human and animal consumption as well as problems needing further research.

Networking Activities

- May 20 - 24, 1984. Milton Coughenour participated in an FSSP workshop on Management of Research and Extension in FSR/E.
- April 19 - 21, 1984. Milton Coughenour attended annual meeting of the Sudan Studies Association. Reported on INTSORMIL activities in Sudan, met Mahgoub Bedawi, Sudanese Cultural Counselor, and sought his support in recruiting potential students.
- August 23, 1984. William B. Lacy organized and chaired session at the

annual meeting of the Rural Sociological Association, "Sociologists' Role in AID's International Agricultural Research Programs;" Cornelia B. Flora, FSSP (Kansas State University); Michael Nolan, Small Ruminants CRSP (University of Missouri); Gerald C. Wheelock, Peanut CRSP (Alabama A&M University); Pat Garrett, Bean and Cowpeas CRSP (Cornell University).

- September 16 - 22, 1984. William B. Lacy attended program for Sorghum and Millets in Latin American Farming Systems Workshop - CIMMYT, El Batan, Mexico.
- September 1984. William B. Lacy visited Mexico City for preliminary talks regarding study of sorghum research. Following individuals were contacted:
- Dr. Restepo, Director-Centro de Ecodesarrollo; Dr. Jesus Moncada de la Fuente, former Director of INIA and currently the Secretario Ejectivo Consejo Directivo de la Investigacion Agricolas, Pecuaria y Forestal; Dr. David Barkin, UAM, Zochimilo, Department of Economics; Dr. Blanca Suarez, Research scientist, Centro do Ecodesarrollo; Dr. Jaime A. Matus Gardea, Director del Centro de Economia Colegio de Postgraduados, Institucion de Ensenanza e Investigacion en Ciencias Agricolas, Chapingo Mexico; Dr. Gregorio Martinez, Valdes Centro Internacional de Majoramiento de Maiz y Trigo (CIMMYT); Dr. Don Winkelman, Research scientist, CIMMYT.
- September 1984. Billie R. DeWalt planned and participated in the workshop "Sorghum and Millets in Latin American Farming Systems" held at CIMMYT. The workshop was co-sponsored by CIMMYT, ICRISAT, CATIE, INIA, and the Farming Systems Support Program. Kathleen DeWalt, David Barkin, and Elizabeth Adelski also participated in this workshop.
- October 1984. Billie R. DeWalt and David Barkin participated in the first annual meeting of sorghum researchers in Mexico held in Monterrey.
- January 1985. David Barkin and Jose Carlos Escudero visited the University of Kentucky as part of a research investigator exchange.

Travel

<u>International</u>

- C. Milton Coughenour. July 1 - December 7, 1984, in Sudan conducting research.

- Lawrence Busch. November 28 - December 2, 1984, to Dominican Republic to consult with Tex Ford (USAID), Sergio Catalina (Ministry of Agriculture), and others regarding FSR plans in Azua and San Juan de Ocoa.
- Billie R. DeWalt. July 1 - October 31, 1984, in Mexico conducting FSR.
- Kathleen DeWalt. September 13 - 24, 1984, in Mexico City to participate in a FSR workshop.
- William Lacy. September 16 - 28, 1984, in Mexico City to participate in a FSR workshop.
- Elizabeth Adelski. September 13 - 24, 1984, in Mexico City to participate in a FSR workshop.
- Saadi Nazhat. July 1 - December 7, 1984, in Sudan conducting research.
- Paul Marcotte. September 1 - February 28, 1985, and June 14 - June 21, 1985, in Dominican Republic conducting research.

Domestic

- C. Milton Coughenour. (a) February 19 - 21, 1985, attending PI Conference, Lubbock, Texas; (b) April 18 - 20, 1985, attending Sudan Studies Association meetings and reporting on research, East Lansing, Michigan.
- Lawrence Busch. February 19 - 20, 1985, attend PI Conference, Lubbock, Texas.
- Larry Burmeister. June 15 - 30, 1985, attend French language school in Monterey, California.
- Billie R. DeWalt. (a) September 8 - 11, 1984, in West Lafayette, Indiana, participate in Five-Year INTSORMIL evaluation. (b) November 14 - 18, 1984, in Denver, Colorado, participate in Annual meeting of the American Anthropological Association and reporting research. (c) May 22 - 25, 1985, in Ithaca, New York, to consult with Cornell University scholars on INTSORMIL program.
- Kathleen DeWalt. February 19 - 20, 1985, in Lubbock, Texas, to attend INTSORMIL PI Conference.
- William Lacy. August 22 - 25, 1984, in College Station, Texas, participate in annual meeting of the Rural Sociological Society and chair a panel discussion of the role of sociologists in CRSPs.

Publications and Presentations

Publications

Busch, L. "Science, technology and everyday life." Pp. 289-314 In Harry K. Schwarzweller (ed.), Annual Review of Rural Sociology and Development, Vol. 1. Greenwich, CT: JAI Press, 1984.

Busch, L., and W.B. Lacy. "Sorghum research and human values," Agricultural Administration, 15 (1984): 205-22.

Coughenour, C.M., "Farmers and farm workers: Perspectives on occupational complexity and change." Pp. 1-35 In Harry K. Schwarzweller (ed.), Annual Review of Rural Sociology and Development. Vol. 1. Greenwich, CT: JAI Press, 1984.

Coughenour, C.M., and S. Nazhat, Recent Change in Villages and Rainfed Agriculture in Northern Central Kordofan: Communication Process and Constraints. Report No. 4. Lexington, Kentucky: INTSORMIL and Department of Sociology, University of Kentucky, 1985.

DeWalt, B.R., and P.J. Pelto eds. 1985 Micro and Macro Levels of Analysis in Anthropology: Issues in Theory and Research. Boulder, CO.: Westview Press.

DeWalt, B.R., and K.M. DeWalt, 1984 Sistemas de Cultivo en Pespire, Sur de Honduras: Un Enfoque de Agroecosistemas. INTSORMIL and Instituto Hondureno de Antropologia e Historia: Tegucigalpa.

DeWalt, B.R. 1984. International Development Paths and the Policies: The Cultural Ecology of Development. The Rural Sociologist 4:255-268.

DeWalt, B.R., 1984 Commentary on Diagnosis and Description. In, P. Matlon, R. Cantrell, D. King, and M. Benoit-Cattin (eds.), Coming Full Circle: Farmers' participation in the Development of Technology. Ottawa, ONT: International Development Research Centre. Pp. 90-91.

Barkin, D., and B.R. DeWalt, 1984. El Sorgo y la Crisis Alimentaria en Mexico. In Sorgo Y Mijo en Sistemas de Produccion en America Latina, INTSORMIL/ICRISAT/CIMMYT: El Batan, Mexico (in press). (Presentation made at workshop held at CIMMYT.)

DeWalt, B.R., and D. Barkin, 1984. LaCrisis Alimentaria Mexicana e Investigacions en Sorgo. In La Primera Reunion Nacional sobre Sorgo, Universidad Autonoma de Nuevo Leon: Marin, Nuevo Leon (in press). (Presentation made at workshop.)

DeWalt, B.R., and S. Duda 1985. Farming Systems Research in Southern Honduras. In Judy F. Winn ed., Fighting Hunger with Research, INTSORMIL: University of Nebraska. Pp.184-192.

DeWalt B.R., 1985. Farming Systems in Mexico. In Judy F. Winn, ed. Fighting Hunger with Research, INTSORMIL: University of Nebraska.

DeWalt, B.R., 1985. The Agrarian Bases of Conflict in Central America. In, Kenneth Coleman and George Harring, eds., Central America: Background and Policy Options. Scholarly Resources Inc.: Wilmington, Delaware. Pp. 43-54.

DeWalt, B.R., and P.J. Pelto, 1985. Microlevel/Macrolevel Linages: An Introduction to the Issues and a Framework for Analysis. In, B.R. DeWalt and P.J. Pelto eds., Micro and Macro Levels of Analysis in Anthropology: Issues in Theory and Research. Boulder, CO: Westview Press. Pp. 1-21.

Pelto, P.J., and B.R. DeWalt, 1985. Methodology in Macro-Micro Studies. In, B.R. DeWalt and P.J. Pelto eds., Micro and Macro Levels of Analysis in Anthropology: Issues in Theory and Research. Boulder, CO: Westview Press. Pp. 1-21.

DeWalt, B.R., 1985. Microcosmic and Macrocosmic Processes of Agrarian Changes in Southern Honduras: The Cattle are Eating the Forest. In, B.R. DeWalt and P.J. Pelto eds., Micro and Macro Levels of Analysis in Anthropology: Issues in Theory and Research. Boulder, CO: Westview Press. Pp. 165-186.

DeWalt, B.R., 1985. Mexico's Second Green Revolution. Mexican Studies/Estudios Mexicanos 1:29-60.

DeWalt, B.R., 1985. Anthropology, Sociology, and Farming Systems Research. Human Organization 44:106-114.

DeWalt, B.R. and K.M. DeWalt, 1984. Sistemas de Cultivo en Pespire, Sur de Honduras: Un Enfoque de Agroecosistemas. INTSORMIL and Instituto Hondureno de Antropologia e Historia: Tegucigalpa.

DeWalt, K.M., 1984. Nutritional Strategies and Farming Systems Research in Southern Honduras: The International Sorghum and Millet Project. In, C. Flora, ed., Animals in the Farming System, Proceedings of Kansas State University's Farming Systems Research Symposium. Manhattan, Kansas.

Reeves, E. An Indigenous Rural Marketing System in North Kordofan, Sudan. Report No. 3. Lexington, KY.: INTSORMIL and Department of Sociology, University of Kentucky, 1984.

Presentations

Busch, Lawrence, May 27-31,1985. "Food security: What does it mean for Tanzania?" Invited paper presented at UNICEF Workshop on Food Security, Mikumi, Tanzania.

Busch, L. June 26, 1985. "The socioeconomic impact of plant breeding." Presented at annual meetings of the Agriculture Institute of Canada, Charlottetown.

Busch, L. April 15-17, 1985. "The sociology and politics of agricultural research." Presented at the Agricultural Research Policy Seminar, St. Paul, Minnesota.

Busch, L. May 20-23, 1985. "Agricultural research: An instrumental approach." Invited paper presentation to the Liberal Arts Faculty Conference, Kansas City, Missouri.

Busch, L. August 23, 1984. "The impact of biotechnology on public agricultural research: The case of plant breeding." Presented at the Rural Sociological Society meetings, College Station, Texas.

Coughenour, C.M. "Constraints to communication of innovations among farmers in central Kordofan." Presented to a) Kordofan Ministry of Agriculture, Department of Agricultural Extension Service and Kordofan WSARP, November 5. 1984; b) South Kordofan Department of Agricultural Extension Service, Nuba Mt. Development Corporation, and WSARP-Kadugli, November 18, 1984; c) USAID Sudan, December 2, 1984, and d) Sudan Studies Association, April 19, 1985.

DeWalt, K.M. September 16-20, 1984. "Including nutritional issues in Farming Systems Research." Presented at the workshop on Sorghum and Millet in Farming Systems in Latin America, Mexico City.

Lacy, W.B. August 24, 1984. "INTSORMIL and the role of social scientists." Presented at meetings of the Rural Sociological Society.

Marcotte, P. June 17, 1985. "Smallholder sorghum production in the Dominican Republic." Presented to USAID in Santo Domingo.

Changes in Year 7 Objectives

1. Develop plans for farming systems research in West Africa.

2. K.M. DeWalt and B.R. DeWalt will complete the analysis of Honduras farming systems data while at Cornell University (Sabbatical Leave).

3. Analysis of data of communication networks in small and large Sudanese villages.

4. Complete analysis of farming systems in two areas of the Dominican Republic.

5. Develop plans for farming systems and/or communications studies in Sudan.

Economic Analysis of the Potential for Marketing Grain Sorghum in the Philippines

Project NU-17

Lydia Oliva and Dale G. Anderson

University of Southern Mindanao and University of Nebraska

Other Researchers

Dr. Dely Gapasin, Director, Division of Crops Research, Philippine Council for Agricultural Resources Research Development (PCARRD), Los Banos, Philippines

Dr. George Pfeiffer, Department of Agricultural Economics, University of Nebraska

Dr. Jerry Maranville, Department of Agronomy, University of Nebraska

Dr. Leonardo A. Gonzales, Assoc. Agricultural Economist, International Food Policy Research Institute (IFPRI)/International Rice Research Institute (IRRI), Los Banos, Philippines

Dr. Jerome F. Sison, Acting Head, Department of Agricultural Economics, University of the Philippines, Los Banos (UPLB), Philippines

Mr. Jerry Amoloza, Department of Economics, UPLB, Ph.D. graduate student at University of Nebraska

Ms. Lillian Brion, PCARRD, Ph.D. graduate student at University of Nebraska

Summary

While it is clear that grain sorghum production is technically feasible in the Philippines, its economic feasibility remains uncertain. Work during Year 6 of the present project laid the groundwork for an economic assessment of sorghum production and marketing activities. Research to follow will employ economic-engineering procedures in analyzing costs and risks associated with sorghum production and a market structure approach in evaluating the performance and needs of the feed grains marketing system.

The two Philippine students whose Ph.D. dissertation projects are central to the project made good progress during Year 6 toward completion of their course requirements. Progress was made in reviewing literature pertinent to project objectives and toward refinement of theoretical and procedural plans. Travel to the Philippines at midpoint in Year 6

facilitated agreement of the principal investigators upon a coordinated approach to this and other complementary studies.

The stage is now largely set for in-country data collection and subsequent analytical activities which are scheduled to begin early in 1986. The project is expected to yield preliminary results by the close of Year 7, results which should provide policy makers with assistance in formulating appropriate feed grains programs and crop scientists guidance toward appropriate directions in their research.

Institutions

Collaborating Host Countries: Philippines

Formal agreement with PCARRD (Philippine Council for Agricultural and Resources Research and Development), Los Banos; collaborative work plans with SMARC/UPSM (Southern Mindanao Agricultural Research Center/University of the Philippines, Southern Mindanao), Kabacan.

U.S.: Department of Agricultural Economics, University of Nebraska, Lincoln

Linkages:

- Informal working arrangements with UPLB (University of the Philippines, Los Banos) and IRRI (International Rice Research Institute), Los Banos.
- Integrated cooperative effort with other University of Nebraska, Lincoln, INTSORMIL projects, including NU-13 (Cropping Systems), NU-14 (Mineral Element Uptake-Tolerance), NU-16 (Stress Research and Water Use Efficiency), and NU-21 (Philippine Country Project).

Ecogeographic Zones Most Benefited by Research:

Asian Subcontinent

Objectives, Research Procedures, and Production/Utilization Constraints

Sorghum/Millet Constraints

Previous sorghum research in the Philippines has focused mainly on the crop's agronomic aspects. Its favorable characteristics include high productivity, high tolerance to water stress, and good performance under excessive soil moisture conditions. It has potential as a ratoon crop with resulting minimal input demands. Ratoon yields of 2.54 tons per hectare have been reported.

IRRI investigators have found that sorghum is a promising crop following rice in a cropping pattern adapted to upland and rainfed farming conditions, averaging three tons per hectare and with a potential yield of six tons per hectare. Sorghum outyielded corn on every field in a study in Batangas by an average of 1.2 tons per hectare.

Rotation crops following rice have fared poorly in many areas because of the rapid approach of the dry season after harvest, the decreasing weekly rainfall and the unpredictable onset of totally dry weather. Corn under such circumstances is a risky venture; but sorghum, a much more drought tolerant crop, shows promise for favorable returns.

Research at IRRI suggests that sorghum is well suited as a crop to follow rice in rainfed and upland areas, although it might also be continuously cropped. The yield potential of sorghum is high compared with that of corn in environments of marginal solar energy, moisture and soil nutrients. Its ability to withstand drought and moderately high salt conditions where other crops would fail makes it a potentially valuable crop for marginal areas.

In spite of its apparent advantages, the adoption rate of sorghum has been slow apparently owing to a) problems in marketing, b) post-harvest processing problems, and c) lack of sufficient high quality seed. Although varieties having local promise have been developed, the marketing system needed for disposal of surplus production is poorly developed. Having been considered relatively recently as a potential field crop in the Philippines, research data on sorghum production under local conditions are very limited. In particular, a significant economic analysis of the potential for expanded production is critically missing. Economic analysis is needed not only to evaluate the relevance of sorghum as an alternative and complementary feed supply, but to guide future biological and physical studies. The present research addresses these needs in the context of the particular circumstances which may attend production and marketing of grain sorghum in the Philippines.

Year 6 Objectives

The objectives of the present project are directed specifically toward resolving the unanswered question of economic feasibility of growing grain sorghum in the Philippines. Costs and returns from sorghum production will be evaluated based largely on data from farm trials conducted during the

1970's and trials which commenced in the fall of 1984 as a part of the overall PCARRD/INTSORMIL collaboration. Further data will be obtained from a survey of sorghum producers in Cotabato Province. The latter will be undertaken as part of student data-gathering activities early in 1986.

Vaguely specified marketing problems have been blamed for the limited success of earlier efforts to encourage wider production and use of sorghum. The marketing case-study, data collection for which will begin early in 1986, will describe and evaluate the marketing system for feed grains. It will identify constraints and, where appropriate, suggest improvements.

Objectives for Year 6 were groundwork for meeting the above overall objectives. They consisted of training for the students supported under the project, review of literature, and refinement of the project's theoretical and procedural framework.

Changes in Objectives from Previous Year

None

Research Procedures

The two Ph.D. graduate students supported under the project made progress during Year 6 in reviewing relevant literature and began to develop specific theoretical and procedural steps to be undertaken in their research projects. They have finished most of their course work and hope to complete comprehensive examinations by midpoint of Year 7.

Close cooperation is being effected between the technical and economic components of the project. Cropping systems to be analyzed are being chosen based largely on recommendations of United States and Philippine crop scientists. Field trials were established during Year 6 at sites in North Cotabato. These trials will provide part of the data needed for the production analysis. Surveys of farmers and marketing intermediaries, along with a variety of secondary sources will complete the data set.

Plans refined during Year 6 call for cost estimates to be derived from field trial results, adjusted for local conditions and, where available, from farm survey results. A hybrid of sources will be required, using cost synthesis (economic engineering) procedures as an integrating mechanism. Costs and risks associated with sorghum production will be compared with costs and risks associated with alternative crops and cropping systems to determine whether sorghum is indeed the best cropping enterprise under

conditions thought by crop scientists to be favorable to its production. Costs of sorghum production will be compared with those for maize production since maize is the major competitive feed grain. It is important that technology appropriate to local farm sizes, resource combinations, and financial capabilities of local farmers be the focus of cost comparisons. Linear programming may be a useful analytical tool for the research.

Since very little grain sorghum is presently grown and since marketing procedures and channels for sorghum are likely to parallel those for maize, the marketing system for maize will by necessity be the focus of much of the marketing study. Special attention will be given to any unique circumstances which may attend the marketing of grain sorghum. Cotabato Province, a major producing area and the site of SMARC field trials will be the focus of the marketing study.

The study will have a market structure orientation, with initial work being directed toward describing the structure of the industry, from the assembly of grain from farms through its final distribution as feed to livestock producers. Each of the major intermediate activities, including transportation, storage, processing, and the role of government (pricing, grades, standards, and the like) will be given attention. The ultimate purpose for the research is an assessment of the structure of the performance of feed grain marketing activities. In this connection, it will be necessary to estimate the costs of services provided at each stage of the marketing sequence and to relate these costs to estimated marketing margins. Economic-engineering cost-finding procedures will be used for this part of the analysis. Special attention will be given to scale relationships and to the implications of projected future feed grain demands for unit costs.

Problems Regarding Achievement of Objectives

No major problems have been encountered thus far. Year 7, when in-country data collection activities will get underway, is likely to be the most critical period. Data collection is expected to be a challenging activity.

Project Output

Research Findings

The project was not designed to produce significant results until late in Year 7, after in-country data collection and preliminary evaluation activities have been accomplished.

Research Progress

Results obtained during Year 6 provide the basis for pushing ahead with data collection and evaluation work in Year 7. Ultimate results will help to establish the economic feasibility of sorghum under alternative circumstances. A basis will be provided for improved sorghum policy decisions and for guidance for plant science research.

Networking Activities

Workshops

- June 15 - 16, 1984. Anderson briefed Professor J. Maranville on progress and plans of economic analysis, part of the overall Philippine project, in preparation for his participation in "Consultative Meeting and Review of Sorghum and Research Development in the Philippines," Los Banos, Philippines; project plans were refined based on agreements reached at the workshop.
- August 24, 1984. Anderson participated in "Workshop on Economic Analysis in INTSORMIL," Washington, DC.

Research Investigator Exchanges

- January 3-15, 1985. Anderson and Maranville coordinated project activities and plans with Philippine counterparts and others during a trip to Manila, Los Banos, and numerous sites in Cotabato.

Germplasm and Research Information Exchange

- October 7-10, 1984. Anderson participated in Farming Systems Symposium, Manhattan, Kansas, (trip not financed by INTSORMIL).
- September 9-12, 1984. Participated in INTSORMIL Review of Socioeconomic and Nutrition Project, Purdue University.
- February 19-22, 1985. Participated in annual INTSORMIL PI Conference, Lubbock, Texas.

Assistance to Host-Country Researchers

- Assisted Professor L. Oliva, counterpart researcher at SMARC in North Cotabato, in planning future project activities.

Travel

- August 3-9, 1984; J. Amoloza and L. Brion; Cornell University; annual meeting of American Agricultural Economics Association.

- August 24, 1984; D. Anderson; Washington, D.C.; Workshop on Economic Analysis in INTSORMIL.
- September 9-12, 1984; D. Anderson; Purdue University; INTSORMIL Review of Socioeconomic and Nutrition Projects.
- January 3-15, 1985; D. Anderson; Honolulu, Hawaii and Manila, Los Banos, and Cotabato, Philippines; coordinate project activities with Philippine counterparts and others.
- February 19-22, 1985; D. Anderson; Lubbock, Texas; INTSORMIL PI conference.

Publications and Presentations

Publications

None

Presentations

Presentations were made at the Workshop on Economic Analysis in INTSORMIL (Washington); INTSORMIL Review of Socioeconomic and Nutrition Projects (Purdue University); and at coordination meetings with counterpart researchers (Kabacan and Los Banos, Philippines).

Changes in Year 7 Objectives

None

Economic Evaluation of New Technology in Sorghum and Millet Production in Developing Countries

Project PRF-5

Philip C. Abbott

Purdue University

Other Researchers

Host Countries Collaborators:

Dr. Taye Bezuneh, Regional Coordinator for West Africa, SAFGRAD, Ouagadougou, Burkina Faso

Ing. Sibiri Sawadogo, Director of Farming Systems Research, IBRAZ, Ouagadougou, Burkina Faso

Mr. Ly Samba, Director, Department of Rural Economy (DECOR), INRAN, Niamey, Niger

U.S. Collaborators:

Lee F. Schrader, Purdue University, Professor, Department of Agricultural Economics

Jon Brandt, Purdue University, Associate Professor, Department of Agricultural Economics

Robert Deuson, Purdue University, Chief Economist, Purdue Niger Cereals Research Project, Institute Nigerien du Recherche Agronomic (INRAN)

Summary

This project examines the economics of new technology adoption for millet and sorghum in three African countries--Burkina Faso, Niger, and Sudan. Constraints to increased production of millet and sorghum are viewed at two levels. On the one hand, agronomic constraints define the environment and the problems which must be solved in order to expand output. On the other hand, economic constraints determine the acceptability of proposed solutions. Those economic constraints exist at the farm level, based on farmer behavior, and at the national level, where policy distortions condition the incentives faced by farmers. The agronomic and economic constraints must be addressed simultaneously to identify successful new technologies and to provide information to researchers and policymakers on the production and diffusion of new technologies.

The agronomic constraints found to be most binding are water shortages and low soil fertility. A variety of new technologies have been considered which address these problems. In Burkina Faso, tied ridges permit water conservation and increased levels of fertilization. In both Burkina Faso and Niger, increased fertilization is seen as the means by which farmer responses to increased prices will lead to increased production. In the Sudan, a new hybrid sorghum which is adapted to that harsh environment has the potential to contribute to increased production if the economic incentive to adopt the variety exists.

Whole farm modeling based on linear programming points to seasonal labor shortages as one crucial economic constraint limiting the adoption of these new technologies. In the case of tied ridges in Burkina Faso, labor demand during the first weeding period determines the extent to which this technology is adopted. In that period, the value of labor to the family farm is roughly ten times average wage rates during the year, but labor is neither bought nor sold. Similar seasonal labor constraints are key to land utilization and technology adoption in Niger and Sudan.

These three case-study countries also are used to show the effect of market failure and policy-distorted agricultural prices on incentives to adopt new, modern technologies. In the case of Niger, an examination of the role of official and parallel markets reveals that policy must be set with knowledge of international markets faced by farmers. Those studies which have suggested Nigerian farmers will not be responsive to price incentives have not recognized that parallel market prices and not official market prices can drive production decisions. Input subsidies, both for fertilizer and credit, are important components of this policy environment and of the effectiveness of policy reforms.

Agricultural sector modeling is being used in Burkina Faso to comprehensively study the link between policy and incentives to adopt new technology. In Niger and Sudan, shortcuts to that approach are being explored. In all approaches, farm level modeling provides the basis for proceeding and is done in collaboration with national agricultural research organizations. Because of the resources needed to implement these farm models and because of their primary interest to the national research organizations this project is going through a transition phase. In the future, macroeconomic analysis is to be deemphasized, and farm level

analysis of the constraints to increased sorghum and millet production will be emphasized.

The farm level models are used in conjunction with agricultural research to evaluate new technological alternatives and to make an input into the agricultural research design process. In Burkina Faso, we have already seen SAFGRAD explore alternative timing of tied ridge construction and the design of implements to facilitate animal drawn tied ridging to overcome the seasonal labor constraint. We expect this interaction between economic analysis and agricultural research to continue as an integral part of this project.

Institutions and Linkages

Research is focused in three African countries--Burkina Faso, Niger, and Sudan. Linkages have been established with the national agricultural research organizations and other institutions in each of these countries.

The main contact in Burkina Faso is with the SAFGRAD program, a regional research network for West Africa funded by A.I.D. The Purdue Farming Systems Unit (FSU) in Burkina Faso, a SAFGRAD program, provides an ideal linkage between this project and African institutions. Mr. Sawadogo, who was formerly in the FSU project is now director of farming systems research in IBRAZ, the Burkina Faso national agricultural research organization. Mr. Sawadogo is being sent by that organization to study for his Ph.D. in agricultural economics at Purdue. L. Ames, a research associate with PRF-5, is currently in Burkina Faso working with SAFGRAD. Three research assistants now with PRF-5 have worked in the past with FSU and SAFGRAD--M. Roth, A. Bukowski, and K. Sawadogo. Roth has worked directly with the Ministry of Rural Development.

This work with SAFGRAD is focused on Burkina Faso, but the research results and methodology should be relevant for a large area of the Sahel. Sanders participated in a regional conference on developing new agricultural technology in West Africa sponsored by SAFGRAD and FSU. Papers by Roth and by Sawadogo were presented at the conference. Contacts were made at that time with various research organizations in Niger and other West African countries. We are now attempting to utilize the methodologies developed in our research in Burkina Faso in developing collaborative research in Niger and the Sudan. Models for a region in each country have already been developed at Purdue which may serve as a basis for further work.

In Niger, Purdue is conducting the Purdue Cereals Research Project in collaboration with INRAN, the Nigerian agricultural research organization. Dr. Abbott traveled to Niger in July of 1984 to establish contact between INRAN and PRF-5. A plan of work was developed which would lead to collaborative research involving students from Purdue University located in Niger. This research will be done in close collaboration with the Purdue Cereals Research Project through Dr. R. Deuson and Mr. L. Samba, Director of DECOR--our counterpart in Niger. Dr. Sanders will be traveling to Niger in September to pursue the plan of work developed by Dr. Abbott and identify opportunities for further collaboration. A. Adessina, a research assistant working on PRF-5 under Dr. Abbott's supervision, has been obtaining data and assistance from INRAN in his research on marketing in Niger and its implications for farmers.

Our research in Sudan has been limited to one study of technology adoption under alternative policy regimes in the Gezira scheme. Mr. A.T. Ahmed, an economist with the Agricultural Research Corporation (ARC), carried out this research as an M.S. student at Purdue University under Dr. Abbott's supervision. Mr. Ahmed is currently in our Ph.D. program and will be doing a thesis under Dr. Sanders' supervision. Mr. Ahmed is now funded by ICARDA. This research opportunity offers excellent linkages between INTSORMIL and both a national (ARC) and international research organization (ICARDA).

In addition to our formal ties with these organizations, informal collaboration with ICRISAT, especially in Burkina Faso, has benefited this project. For example, ICRISAT researchers in Burkina Faso have shared their unpublished data with us to enhance Roth's farm modeling work.

Ecogeographic Most Benefited by Research

Of the six ecogeographic zones indicated in the Global Plan, clearly West Africa will benefit the most. We also plan to do more work in East Africa, specifically the Sudan. Past and proposed future research is to be in Burkina Faso, Niger, and Sudan. The methodologies and results of this project will be applicable to a broad range of sub-Saharan countries, however.

Objectives, Research Procedures, and Production/Utilization Constraints

Opportunities for future research under this project seem to be the greatest in the application of whole farm modeling based on mathematical programming methods for new technology evaluation. Based upon the INTSORMIL evaluation, the response of field contacts, the progress of ongoing research initiatives, and our expectations of future opportunities to collaborate with existing Purdue and INTSORMIL agricultural research projects, a more microeconomic focus seems desirable. Therefore, PRF-5 is going through a transition phase. J. Sanders has agreed to serve as principal investigator of this project. He adds considerable experience in the area of the microeconomics of new technology evaluation and has been an important collaborator in earlier work on this project. Macroeconomic and trade modeling will be deemphasized upon completion of the several projects currently underway. Where opportunities for microeconomic policy evaluation present themselves, they will be pursued. Farm level modeling has served as the backbone of research under PRF-5 to date. While that emphasis remains, the more extensive agricultural sector modeling efforts, such as is now being pursued by Roth, will end with that effort. The following discussion of constraints, objectives, and research procedures reflects this new emphasis.

Sorghum/Millet Constraints

We view that two levels of constraints can restrict the production and utilization of sorghum and millet in developing countries. On the one hand, agronomic constraints define the needs for new production technology or management practices. In our work in West Africa, water shortages and low soil fertility represent the most important constraints limiting production. On the other hand, economic constraints limit the extent to which these agronomic constraints may be relaxed by new technologies. Distorted prices, seasonal labor availability, and marketing opportunities represent the major economic constraints to sorghum and millet production. With the emphasis of this project placed on farm modeling of new technology adoption, production rather than utilization constraints are emphasized. There is a need to address the agronomic and economic constraints simultaneously by examining farmer behavior and response to new opportunities. The agronomic technologies are a given for this project--we look at how the proposed

solutions interact with the economic constraints. Our results have suggested needs for research by other disciplines, however.

In specific West African countries, new technology development is in different stages. In Burkina Faso, excellent agronomic results for improved water conservation and fertilization of sorghum have been achieved. Sudan is in the process of releasing a new hybrid sorghum for both irrigated and rainfed sectors. Some agronomic improvements, specifically utilizing fertilization, have been suggested in Niger by the national research institute. More systematic farm level technology evaluation is necessary to compare and contrast the profitability, risk and potential to fit the new technologies into production systems of farmers in these countries.

Research Procedures

The research procedures for this project are therefore to develop models of representative farms in West Africa. Linear programming models of farming activities have been developed and will continue to be developed for regions in Burkina Faso, Niger, and Sudan. This technique is ideally suited to new technology adoption and for identifying the major constraints to sorghum and millet production. Farmers are viewed in this approach as risk averse profit maximizers. Considerable literature in agricultural economics defends this as an appropriate objective driving farmer behavior. The linear programming model goes well beyond what is possible through partial budgeting; for example, it takes into account the emplicit costs of family labor and land of different quality for which a market price is not known for either category. Seasonal labor, which has emerged as the principal constraint in Burkina Faso to certain fertility enhancing and water conservation technologies, is an excellent example of such a resource. The models indicate levels of technology adoption, profitability of proposed new technologies and the opportunity costs of constraining resources. Careful interpretation of these results leads to identification of the key constraints and possibly to redesign of the new technologies.

In the ongoing research of PRF-5, these farm level models are being integrated into agricultural sector models so that policy can be explicitly investigated. To facilitate that modeling effort, complementary research on marketing linkages between farmers and urban areas and on urban consumption patterns is underway. These studies will provide information to be used in the agricultural sector model. The agricultural sector model will then

determine market equilibrium and hence prices faced by farmers under alternative policy scenarios. In our work in Niger and Sudan, we have been using economic models to simplify the modeling of linkages between policy and farm prices. Given the success we have had in that effort and the need to devote considerable effort to developing good farm models, which are crucial to our analysis, the sector modeling can be reasonably deemphasized.

Year 6 Objectives

The economic analysis described above will be carried out in collaboration with INTSORMIL agricultural scientists in Africa, as it has in the past. In the future, objectives will emphasize farm level evaluation of new technology and putting an economic input into research design. Past objectives have also emphasized policy analysis and the implications of policy for incentives to adopt new technologies.

Specific objectives for PRF-5 were:

1. To document and describe recent trends in the role of millet and sorghum in cereal production, consumption and trade.

2. To evaluate the technical and substitution possibilities among cereals in both production and consumption as a basis for determining the effects of policy induced price distortions.

3. To update documentation of aid, trade, and domestic economic policies and use agricultural sector modeling to draw implications for adoption of improved technologies.

4. To train developing country analysts to conduct this research, and where in depth research has been carried out, to work with government officials in designing more efficient means of attaining these ends.

In its new form, PRF-5 has a more focused set of objectives concentrating on farm level analysis. They are:

1. In collaboration with other national and international scientists to undertake farm level studies of the profitability and fit of new technologies into farmers' systems of production.

2. To collaborate with other national and international scientists in defining research priorities at the farm level.

3. To relate the farm level evaluation to agricultural policy questions and marketing issues which impinge on incentives to farmers.

4. To train researchers from developing countries in the process of undertaking this collaborative work.

Problems Regarding Achievement of Objectives

The greatest problems in conducting this research have been in identifying and establishing relationships with appropriate counterparts in the three African countries. It has been necessary to move very slowly in establishing these linkages, as is evidenced by the year lapse between Abbott's and Sanders' trips to Niger. Through the good offices of Dr. Deuson, we continue to see a basis for collaboration but expect progress to be slower than for our initial efforts in Burkina Faso.

The political climate in Burkina Faso has also created problems for this project. L. Ames was to follow up on Roth's farm modeling in Burkina Faso. With the current political situation in that country, her work has taken on a more regional focus, and future research may need to be conducted in other countries.

The transition in this project reflects to some extent the desires of traditional INTSORMIL counterparts--the national agricultural research organizations. Economics research is generally only a small part of the mandate of these organizations. Projects like ours must convince those organizations of the usefulness of economic research. The microeconomic research, which we will now be emphasizing, is seen as more directly complementary to the ongoing work of these organizations.

Future research under PRF-5 will need to be conducted in close collaboration with existing projects, such as Purdue's projects in Burkina Faso and Niger. Our INTSORMIL budget does not permit the collection of extensive microeconomic data necessary to implement our modeling approach. We must have access to data collection by these other projects. We feel that our efforts are highly complementary to the ongoing research of those projects and national agricultural research organizations, however. We can add a dimension to that research which is frequently missing.

Project Output

Research Findings and Progress, and Future Directions

Research to date illustrates both the utility of whole farm modeling in understanding the technology adoption process and the importance of prices, as affected by policies, in conditioning the decisions taken by farmers.

While most of the research is part of a longer term effort and is still underway, several specific findings of considerable interest have emerged. Research results are discussed below by country.

Burkina Faso

Three projects are underway as part of the PRF-5 effort in Burkina Faso. M. Roth has constructed representative farm models for five regions in Burkina Faso. He is now placing those models into an agricultural sector model in order to examine policy and pricing issues. A study by A. Bukowski of the marketing system is nearing completion and will be used to set the market linkages in Roth's sector model. K. Sawadogo's analysis of consumer demand is also nearing completion. It is being used to develop demand linkages of the sector model. L. Ames is now in Burkina Faso to follow up on the farm level modeling begun in Roth's project. Ames will consider the implications of risk and other constraints impeding farmer adoption of new millet and sorghum technologies.

The farm models developed in this project point to the critical importance of economic factors in technology adoption. Agronomic research has pointed to the crucial problems of low soil fertility and water shortages in millet and sorghum production. Tied ridging has been proposed and investigated as a solution. On-farm trials indicated that this technology can have a significant impact on yields. The whole farm modeling, however, indicates that the time when ridges are constructed is when labor is most scarce. Labor cannot be hired during this crucial period, and opportunity costs of labor are extremely high. Partial budgeting offers no way of making any assessment of this seasonal labor availability question. With the whole farm model, animal traction as a way of breaking that bottleneck was investigated and was shown to be a necessary input to this technology. Research in Burkina Faso, as a consequence of this collaboration, has looked at design of implements to allow construction of tied ridges with animal traction and less human labor inputs, and has also looked at altering the timing of the construction of ridges. As a result, proto-type animal drawn "tied ridgers" have been developed and are presently being field tested during this crop season. This research has also demonstrated the key role played by fertilizer prices in determining the profitability to farmers of this new technology.

The marketing study, which is part of this project, has shown that substantial marketing costs separate producer and urban prices and restrict the flow of grain between rural regions in Burkina Faso. These high costs are due to poor road networks and the assembly costs paid to marketing agents who handle grain. The large number of market intermediaries makes this cost high. These transportation limitations are significant in our policy modeling effort. They allow us to limit grain flows in the analysis to those between rural areas and urban centers. They also show that in spite of these high costs, markets appear to be competitive, so that price changes in the cities will be reflected in farmer prices.

The study on consumer demand indicates that millet and sorghum consumption depends more strongly on income and prices than previously believed. Estimates of the food consumption responses to family income and to prices of the commodities are higher than is typically assumed for a West African country. While the budget shares of millet and sorghum are shown to fall relative to wheat and rice as incomes increase, the results do not indicate strong price driven substitution between traditional and modern cereals. Income and demographic characteristics are more important in the data analyzed in determining the choices between these types of cereals.

The studies of policy analysis, marketing, and consumer demand will be completed in Year 7, while the farm modeling will continue into Year 8. Ames will return from the field in early 1986, and the results of that research will subsequently be documented.

Niger

In spite of the difficulties in establishing a collaborative relationship with INRAN in Niger, a preliminary study linking farmer responses in a representative farm model to marketing and international trade issues is nearing completion. The representative farm model emphasizes fertilization, a technology advocated by INRAN and a subject of policy intervention. It also considers cross border trade with Nigeria and its effect on farmer decisions. The farm model indicates that farmers are responsive to price changes--if these changes occur in the markets that matter. Previous studies, which argue that Nigerian farmers do not respond to price incentives, look at Nigerian official prices and not the parallel market prices driven by the market in Nigeria. The relationship between fertilizer and product prices is an important dimension of the agricultural

policy problem in Niger. If millet and sorghum and fertilizer prices rise together to world market levels, the primary effect of higher product prices will be substantially reduced by the effect of higher input prices. The budgetary costs to the Nigerian government then become an important factor. Budgetary limitations are shown to restrict official fertilizer sales at subsidized prices. Credit constraints through subsidized fertilizer sales are in turn a factor limiting the sales of grain to official channels. Currently, grain sales to the parallel market and to Nigeria are more profitable than in much of Niger. A reason, such as the need to repay fertilizer loans, is needed to explain what little grain now goes through official channels. The spatial dimension to agricultural pricing in Niger then becomes important in determining just how effective policy can be in generating a marketed surplus in Niger to feed the cities.

The farm level model which serves as the core of this analysis can easily be used, with modification, to examine other new technologies now being developed by agricultural scientists in Niger. One future thrust of this project will be to establish collaborative ties with INRAN so that this modeling effort can be introduced into that organization.

This research has also shown that with judicious use of economic theory and certain assumptions about market behavior--that markets are competitive--farm level modeling is the major need for many policy issues related to technology adoption. While the sector model provides a much more comprehensive method of analysis, we can go a long way towards looking at some key issues by simply changing prices faced by farmers in a manner reflective of competitive market adjustments to policy changes.

Sudan

Our efforts in the Sudan have resulted in the construction of a representative farm model for the Gezira scheme. Analysis using that model shows that for an irrigated region in the Sudan, and at the policy distorted prices, sorghum is not a profitable activity for farmers. This remains true for the new hybrid sorghum developed by the collaboration of INTSORMIL, ICRISAT, and Sudanese researchers, even given its much higher yield. Market failure is driving the current land utilization pattern of farmers. The tenant farmers plant sorghum to generate a supply of food, being unwilling to rely on production of more profitable cash crops and purchase of food.

Such systems as "shail" trading are also important distortions of credit markets which affect land utilization patterns.

African governments frequently intervene in markets for agricultural products and inputs. With sufficient price distortions in these markets, even high yielding new material can be unprofitable. This research in the Gezira emphasizes the importance of combining improved market functioning with the introduction of new technologies. Price policy needs to take into account the incentive factors for farmers as well as the welfare implications for urban consumers from low prices. This research focuses on the farm level consequences of the price policy problem and should be useful to Sudanese policymakers.

With some revisions, the model structure developed for the Gezira can be used to examine the new sorghum hybrid and other technological advances in rainfed areas. It is our intention to pursue that research in subsequent efforts in the Sudan. Collaboration with INTSORMIL researchers at Kentucky who have conducted farming systems research in the rainfed El Obeid region could facilitate this effort.

Overview

Whole farm models have been developed to examine new technological alternatives in Burkina Faso, Niger, and the Sudan. Policy distortions have been investigated using those models and have shown the importance of appropriate prices as incentives to agricultural technology adoption. Economic constraints to increased sorghum and millet production are demonstrated by this research. In particular, seasonal labor constraints are important considerations which need to be addressed in alleviating the important agronomic constraints of water shortage and low soil fertility. Policy distortions and market failures, especially for credit, are also important factors explaining the agricultural practices of African farmers.

This project is going through a transition. In the future, more emphasis will be placed on construction and utilization of the whole farm linear programming models. Burkina Faso, Niger, and Sudan will remain the focus of this effort. The existing farm models provide a strong base for continuing this research and increasing our interaction with agricultural scientists in country. The newly initiated project with SAFGRAD involving Ames and Sanders serves as a model of this new effort.

Travel

The principal investigators of this project have taken three trips to West Africa during Year 6, only one of which was funded by INTSORMIL.

- Abbott traveled to Niger July 7 - 18, 1985, to establish ties with INRAN and the Purdue Cereals Research Project. The purpose of that trip was to establish a program of collaborative research between DECOR and this project. Sanders traveled to Niger to follow up on this effort in September 1985, and to define a detailed plan of work for a research associate to be sent to Niger. Sanders has traveled twice to Burkina Faso to maintain collaborative research ties with personnel in the field. Sanders also attended the Workshop on Developing New Agricultural Technologies held in Burkina Faso with SAFGRAD. Sanders presented several papers arising from this project at that conference. Dates for Sanders' travel to Burkina Faso were September 10-25, 1984, and March 28-April 13, 1985.
- K. Sawadogo also attended the workshop in Burkina Faso, where he presented a progress report on his study. L. Ames has recently gone to Burkina Faso, under PRF-5 support, to continue our interaction with SAFGRAD and FSU.
- Roth also attended the annual conference on farming systems research at Manhattan, Kansas, where he presented papers on our research. At this meeting, contacts were made with many of the researchers in this area. This meeting was held in October, 1984.
- Sanders also traveled to Lubbock, Texas, in February of 1985 to attend the annual INTSORMIL principal investigators' meeting.

Publications and Presentations

Publications

Abbott, P.C. August 1984. "Agricultural policy and Technology adoption—The case of millet and sorghum in Upper Volta," mimeo, Purdue University, West Lafayette, Indiana.

Lang, M.G., M. Roth, and P. Preckel. October 1984. "Risk perceptions and risk management by farmers in Burkina Faso," Farming Systems Research and Extension: Implementation and Monitoring, Proceedings of Kansas State University's 1984 Farming Systems Research and Extension Symposium, Manhattan, Kansas.

Roth, M., and P. Abbott. May 1983. The World Grain Sorghum and Millet Economies. Purdue Agricultural Experiment Station Research Bulletin No. 416, Department of Agricultural Economics, Purdue University, West Lafayette, Indiana.

Roth, M. "A preliminary report on the development of an agricultural sector model for Upper Volta as it pertains to policy analysis activities of the Ministry of Rural Development," Department of Agricultural Economics Staff Paper, Purdue University, West Lafayette, Indiana, March 1984.

Roth, M., and J. Sanders. October 1984. "An economic evaluation of selected agricultural technologies with implications for development strategies in Burkina Faso," Farming Systems Research and Extension: Implementation and Monitoring, Proceedings of Kansas State University's 1984 Farming Systems Research and Extension Symposium, Manhattan, Kansas.

Roth, M. 1985. "An economic evaluation of agricultural policy in Burkina Faso, West Africa: A sectoral modeling approach," Ph.D. Dissertation, Purdue University, West Lafayette, Indiana.

Presentations

Abbott, P.C. July 12, 1984. "Development of an agricultural sector policy and planning model for Upper Volta," seminar to the USAID mission in Niamey, Niger.

Abbott, P.C. July 16, 1978. "Development D'un Modele du Secteur Agricoile pour Etudier La Politique Agricole et Faciliter La Plantification," seminar to INRAN, Niamey, Niger.

Abbott, P.C. August 7, 1984. "Government policies, foreign debt and the prospects for agricultural trade and economic development for a low income African country--The case of Guinea Bissau," a paper presented at the AAEA annual meeting, Cornell University, Ithaca, New York.

Jaeger, W., and J.H. Sanders. April 2-5, 1984. "Profitability of animal traction: Field study in Burkina Faso," paper presented at the Workshop on Technologies Appropriate for Farmers in Semi-Arid West Africa, Ougadougou, Burkina Faso.

Sanders, J.H., and M. Roth. 1985. "The development and evaluation of new systems of agricultural production: Some field and model results from Burkina Faso for tied ridges and fertilizer," paper presented at the

Workshop on Technologies Appropriate for Farmers in Semi-Arid West Africa, Ouagadougou, Burkina Faso.

Sanders, J.H., and B. Shapiro. May - June 1985. "New agricultural technology production for the Mossi Plateau," paper presented at a conference on African Agricultural Development, Pomona, California.

Sanders, J.H., and B. Shapiro. April 1985. "Agricultural development in West Africa: Some macro and micro considerations," paper presented at Rutgers University.

Sawadogo, K. 1985. "Food consumption analysis for Ouagadougou, Burkina Faso," paper presented at the Workshop on Technologies Appropriate for Farmers in Semi-Arid West Africa, Ouagadougou, Burkina Faso.

1985 Country Reports

The Sorghum/Millet CRSP has developed a structure by which a U.S. Principal Investigator serves as a country coordinator. The country project carries with it a budget which is passed through to the national program in support of local research and short term training activities. The country program concept was developed to encourage multidisciplinary collaboration at each of the international sites. The country coordinators are responsible for encouraging and developing this multidisciplinary cooperation.

Funds from the country project budgets have been very useful in providing support for host country collaborators to visit counterpart programs in the United States, to obtain scarce research supplies in support of host country research, to purchase equipment to facilitate collaboration and to provide some limited recurrent research costs necessary to implement CRSP research in the country.

The country research progress reports also document the level of research collaboration that is taking place within a country program. It is significant to note the level of collaboration that is taking place. It is also important to note that the country reports in this document reflect joint planning, joint implementation of research and joint publication of research results.

The progress in this program is reflective of the interest and cooperative spirit that has developed between the U. S. researcher and the Host Country researcher under the collaborative mode.

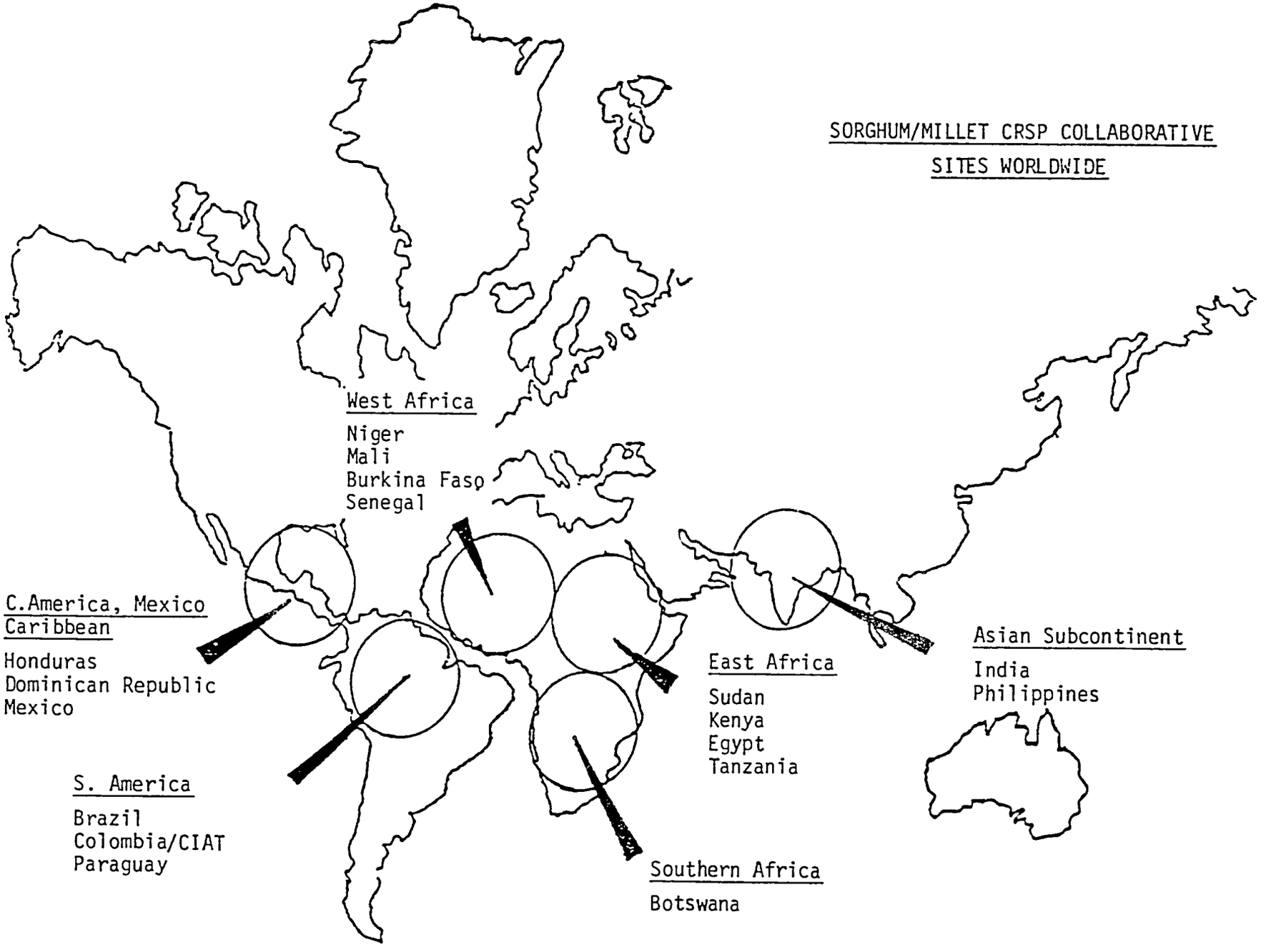
SORGHUM/MILLET CRSP COLLABORATIVE
SITES WORLDWIDE
West Africa
Niger
Mali
Burkina Faso
Senegal
C.America, Mexico
Caribbean
Honduras
Dominican Republic
Mexico
S. America
Brazil
Colombia/CIAT
Paraguay
East Africa
Sudan
Kenya
Egypt
Tanzania
Southern Africa
Botswana
Asian Subcontinent
India
Philippines

Botswana

L.V. Withee
Kansas State University

Collaborative Program

Dr. Douglas Carter and Mr. Wayne Youngquist who arrived in Botswana in April, 1984 have experienced one growing season at Content Farm, Sebele, the principal research field of the Department of Agriculture Research (DAR). Their research at Sebele and at additional sites at Mahalapye, Goodhope and in Ngamiland has been in collaboration with scientists of DAR. There has also been collaboration with scientists of the AID/GOB sponsored Agricultural Technology Improvement Project (ATIP), a farming systems research and extension project of MIAC with Kansas State University as the lead institution; Carter and Youngquist have collaborated with the two agronomists located at Mahalapye and Francistown who work directly with farmers evaluating present technology and devising new technology to overcome recognized constraints. This opportunity has been helpful in giving Carter and Youngquist an understanding of traditional crop cultural practices which enables them to establish directions and priorities for their research.

Present at Sebele are scientists of the Bean/Cowpea CRSP from Colorado State University; Dr. C.J. DeMooy, his wife Barbara and a graduate student, Karen Coniff. Dr. D.W. Burk, USDA plant pathologist, was at Sebele for six months as a consultant to the Bean/Cowpea CRSP. Dr. S.M. Virmani, Principal Agroclimatologist at ICRISAT, Patancheru, India spent nine months of a sabbatical leave at the Evapotranspiration Laboratory, Kansas State University. Using meteorological data obtained from the Department of Meteorological Services, GOB, he delineated agro-ecological zones for Botswana. This work is being prepared for publication.

Sorghum/Millet Constraints Researched

Rainfall was limited at Sebele, Mahalapye and Goodhope (about 220 mm) this past growing season. Rainfall was more nearly adequate in the northeast part of the country, near Francistown, and yields of grain crops were satisfactory. Unfortunately none of INTSORMIL's research was located there. The previous two years were severe drought years with almost complete crop failures countrywide. Stand establishment is the major constraint and three groups of factors are involved: (1) the traditional

method of planting, broadcasting seed and shallow plowing, (2) the availability of animal draft for plowing, (3) high soil temperatures and rapid soil drying. These factors coupled with low and erratic rainfall pose many agronomic problems for researchers trying to find ways to increase or stabilize grain production. Other constraints are low fertility, limited availability of adapted high performance varieties and quality seed, weed control, insect damage, bird damage and deterioration of stored grains.

Botswana imports large quantities of grain and would like to become more self-sufficient. Because of the frequency of drought the country is vulnerable and dependent. Improved productivity would reduce its dependency and improve the economic structure of the country. This is also a goal of U.S. policy in Southern Africa.

Institution Building

During the past year INTSORMIL KSU-7 has purchased equipment amounting to $34,848 which includes the following major items:

Irrigation system for L. Mazhani, sorghum breeder DAR, Sebele
Toyota pickup
Neutron probe and access tubes for soil moisture measurement
IBM PC AT Computer
Software packages MSTAT, SPSS and Lotus Symphony
4 Belt cone planters
20 Tensiometers
5 Soil sampling tubes
1 Micrologger with accessory equipment
1 Infrared thermometer gun

These items along with other research supplies were for the research activities of Dr. Carter and Mr. Youngquist; the equipment has added to the research capability of the DAR and will become the property of the DAR on termination of the project.

Within the past year no INTSORMIL trained host country researchers have returned to Botswana; however, Elija Modiakgotla completed his M.S. and returned in August of 1985 and will work for the Agricultural Technology Improvement Project, a farming systems research/extension project.

Dollina Solomon completed her M.S. at the University of Nebraska in soil fertility and returned to work for DAR at Sebele in soil fertility.

Two other Batswana who are very close to completing or have completed their M.S. degree requirements are Ms. Gasenone Maphanyane at South Dakota State and Ms. B. Motalaote at Texas A&M University.

Ms. Maphanyane will be a pulse breeder and Ms. Motalaote will be a plant pathologist for DAR at Sebele. It is very likely that both will be at Sebele for the 1985-86 growing season.

In January 1985, four INTSORMIL scientists — Drs. L.V. Withee, Richard Vanderlip, Ed Kanemasu of Kansas State University, and Max Clegg of the University of Nebraska visited the INTSORMIL project. They were accompanied by Dr. Arlo Biere of Kansas State University, an agricultural economist. We visited all research sites of the INTSORMIL project; Sebele, Mahalapye and Goodhope. We also went to the villages where the ATIP personnel are carrying on their research. Before leaving we had a meeting at which ATIP personnel and Douglas Carter and Wayne Youngquist of INTSORMIL were present. The purpose of the meeting was to discuss research projects and establish priorities and to integrate the work of INTSORMIL and ATIP to the extent feasible considering their separate charges and the INTSORMIL personnel's responsibilities to the DAR. In early March 1985, D. J. W. McKinsey, Director of MIAC, attended a workshop sponsored by ATIP. Douglas Carter and Wayne Youngquist attended the workshop which was held at the ATIP research sites. Also attending were scientists from other SADCC countries. Mr. David Andrews, millet breeder from the University of Nebraska, visited Sebele in March, and in April Dr. Odvody of Texas A&M University visited Sebele and the ICRISAT/SADCC research sites in Zimbabwe.

Networking

Research results from the first growing season are currently being assembled and interpreted (August 1985). Excellent opportunities for networking exist through DAR and ATIP. ATIP has a research extension liaison officer and ATIP works closely with personnel of the Department of Field Services (extension).

General Comments

At present, within DAR, Louis Mazhani is a sorghum breeder collaborating with Mr. David Andrews of the University of Nebraska and also with the ICRISAT/SADCC program at Bulawayo, Zimbabwe whose leader is Dr. Lee House. It would be desirable to have a millet breeder at Sebele; there is

mutual agreement by DAR, INTSORMIL, and the AID Mission that this would be desirable. Another difficulty is the inadequate number of Batswana who are in training to carry on the work of DAR.

The Southern Africa Center for Cooperation in Agriculture Research (SACCAR) will be located at Sebele. Three major activities of SACCAR when the plan is actualized will be: (1) to serve as a secretariat for Southern African research cooperation in keeping a research program inventory for the SADCC countries, (2) disseminate research results through publication of a scientific journal, through research program reviews, and sponsoring special studies and workshops, (3) promote manpower training and career development.

The INTSORMIL program has strong support from the American Embassy. The following quote is from a telegram to the Secretary of State, Washington, D.C. from the American Embassy for Dr. Jack Robins, AID/W. "We believe the collaboration between the U.S. contract, the national program, and the two Collaborative Research Support Programs (CRSP) for bean and cowpea and for sorghum and millet, has been excellent. Team and Mission view these as critical components of the ATIP effort and any cutbacks to the CRSP field support would jeopardize the overall effort. Also the close working relationships developed with the International Institute for Tropical Agriculture and the International Crops Research Institute for the Semi-Arid Tropics have been productive."

The longtime need is for additional training of indigenous scientists. Current political events in the Republic of South Africa are alarming and developments there will have important implications within Botswana and the region.

Brazil

R.A. Frederiksen
Texas A&M University

Collaborative Program

Institutions Involved

Brazil - EMBRAPA, Sete Lagoas, Minas Gerais and Pelotas, Rio Grande do Sul

Memorandum of Agreement was established August, 1983.

Programs with Brazil are mutually supportive. They are productive and positive projects leading toward the solution of complex international sorghum production constraints.

Sorghum Constraints Researched

Diseases

Anthracnose: pathogen variability - resistance breeding.

Sorghum downy mildew: sources of resistance

Abiotic stresses

Development of methodologies and materials for use in breeding sorghum for acid soils.

These are only two of many sorghum constraints in Brazil. Insects, weeds, drought stress, seed production, other diseases, marketing and utilization also have researchable objectives. We have elected to emphasize programs on disease control and adaptation of sorghum to acid soils because these are two of the most important production constraints in Brazil and have mutually beneficial objectives for both Brazil and the U.S. Progress in the identification of aluminum tolerant sorghums (CIAT/Colombia) will (or should) have a profound impact on the breeding work in Brazil; however, concurrent with the broader adaptation of sorghum to the cerrado regions will be an increased reliance on host-plant resistance, particularly the devastating disease anthracnose.

Research Progress

Identification of races of *Colletotrichum graminicola* in Brazil:

Currently, Ferreira and Casela (unpublished) have recognized seven distinct physiologic races of *Colletotrichum graminicola* from sorghum in Brazil. Seven single conidial isolates of the fungus, obtained from infected fields at Sete Lagoas and Capinopolis (MG), Anapolis, Goinaia and

Jatai (GO), Quixasa (CE), and Pelotas (RS) were used to inoculate 12 different cultivars. Differential interactions between the seven isolates of Colletotrichum graminicola and the differential cultivars were detected. These data indicate that C. graminicola is highly variable in Brazil and that at least a few entries -- SC283 and SC326-6 -- have resistance to most of the isolates tested. While much more work is required to fully categorize the pathogen populations from the seven regions in Brazil, these studies permit identification of more diagnostic host differentials.

Resistance to C. graminicola must be at a high level or growers will need to accept this disease as a major production constraint. This is true even for areas now in production. Because C. graminicola is highly variable, the breeding methodologies will require both novel and innovative approaches. The technology generated on the project will directly benefit Brazil but will also be useful wherever sorghum production is threatened by anthracnose. Anthracnose is a major disease in most South and Central American countries, many regions in East Africa including Sudan, the more humid areas of West Africa (Southern Sahel) and Asia. In order for the acid soils tolerant sorghums to attain anywhere near their potential, they must resist anthracnose. Sorghums resistant to anthracnose under conditions in Brazil have a high potential of conferring a similar level of resistance elsewhere. Furthermore, the multilocation testing in Brazil will permit the development of dilatory (slow disease spread) resistance in sorghum. Dilatory resistance by definition should be effective across environments.

Institution Building

A limited number of laboratory chemicals and supplies were provided by INTSORMIL (approximately 1/15 value of the program). There is little need for additional infrastructure support.

Jose Waquil, entomologist has returned to EMBRAPA after earning a Ph.D. in Entomology (July 1985). Dr. P. Furlani and several other graduates continue close collaborative ties with Ralph Clark on mineral nutrition.

Paulo A. Viana, entomologist, participated in the Sorghum Improvement Conference of North America and the INTSORMIL Planning Seminar, February 1985. A.S. Frerrira, pathologist, conferred with the pathology programs at Texas and Purdue, March-April 1985. Carlos Casela, breeder, undertook a study tour at Texas A&M, Mississippi State and with Ronnie Duncan at Experiment, Ga. R. Borgonovi, breeder, participated in the conference on

genetic aspects of mineral nutrition in plants at Madison, WI. as well as conferring with INTSORMIL workers at Nebraska, Mississippi, and Texas.

Networking

Highlights of some of the collaborative research on pathology were published in the Sorghum Newsletter. For the most part, general and specific information on mineral nutrition is being disseminated from the conference at CIAT, June 1984 and Madison, June 1985.

General Comments

It is recommended that the collaborative research be closely knit, primarily by exchange visits and frequent correspondence.

Brazil has an outstanding agricultural research organization, but currently lacks a high level of project funding. Consequently, both INTSORMIL and EMBRAPA have much to gain by collaborative work.

1. The multiple environments in Brazil provide excellent test sites for evaluation of sorghum germplasm. These sites relate across ecogeographic zones, i.e., Latin America, East and Southern Africa.

2. Pest problems, including pathogens and weeds, are unusually severe in most of the principal sorghum growing regions. Strategies for control in Brazil would be applicable to any conventional grain sorghum production.

3. Brazil has made great strides in the development of high energy sorghums for alcohol production. The integration of this technology along with sorghum utilization could be of great benefit in many ecogeographic zones.

Burkina Faso

Philip C. Abbott

Purdue University

Host Country Collaborators

Dr. Taye Bezuneh, Regional Coordinator for West Africa, SAFGRAD, Ouagadougou, Burkina Faso.

Ing. Sibiri Sawadogo, Director of Farming Systems Research, IBRAZ, Ouagadougou, Burkina Faso.

Collaborative Program

Purdue's INTSORMIL project PRF-5, "Economic Evaluation of New Technology in Millet and Sorghum Production in Developing Countries," has been actively involved in collaborative research in Burkina Faso. No other INTSORMIL project is working in this West African country.

PRF-5 has effectively utilized the SAFGRAD-AID-Purdue Farming Systems Unit (FSU) to conduct field research focusing on new technology evaluation and on implications of economic policy for incentives to adopt new technology. SAFGRAD is the regional cereals research organization for West Africa and is the formal institutional tie for ongoing research. Informal ties exist with the national agricultural research organization of Burkina Faso — IBRAZ. The current Director of IBRAZ, Sibiri Sawadogo, previously worked in the FSU program. Mr. Sawadogo is being sent by IBRAZ to study for his Ph.D. in agricultural economics at Purdue in 1986. A memorandum of agreement also exists between INTSORMIL and the Ministry of Rural Development to facilitate collaboration on the economic policy research. There has also been collaboration with ICRISAT and IITA.

The Purdue Farming Systems Unit has proved to be an invaluable link for this project. It has facilitated institutional arrangements, shared data, and provided field support to INTSORMIL researchers. That cooperation continues with the field research of Ms. Linda Ames. Ames, a research associate with PRF-5, is currently in Burkina Faso working with SAFGRAD. Principal contacts at FSU have been Joe Nagy and Herb Ohm. Three research assistants now with PRF-5 have worked with FSU and SAFGRAD — Mike Roth, Ann Bukowski and Kimsey Sawadogo. Roth has worked directly with the Ministry of Rural Development.

This work with SAFGRAD is focused on Burkina Faso, but the research results and methodology should be relevant for a large area of the Sahel.

We are now attempting to utilize the methodologies developed in our research in Burkina Faso in developing collaborative research in Niger and the Sudan. Models have been developed at Purdue which may serve as a basis for further work.

Problems

Ms. Linda Ames had planned to follow up on Roth's farm modeling in Burkina Faso, however with the reduction of activity in Burkina Faso by AID, her work has taken on a more regional focus, and future research may need to be conducted in other countries.

Future research on PRF-5 will need to be conducted in close collaboration with existing projects, such as Purdue's projects in Burkina Faso. Our INTSORMIL budget does not permit the collection of extensive microeconomic data necessary to implement our modeling approach. We must have access to data collection by these other projects and research organizations. We feel that our efforts are highly complementary to the ongoing research of those projects and national agricultural research organizations, however. We can add a dimension to that research which is frequently missing.

Sorghum/Millet Constraints Researched

As INTSORMIL project PRF-5 is the sole project working in Burkina Faso, research results from that project will be discussed. That project focuses on new technology evaluation for production, hence constraints addressed deal with on farm behaviors and limitations to production from both an agronomic and an economic perspective. We believe that two levels of constraints can restrict the production of sorghum and millet. Agronomic constraints define the needs for new production technology or management practices. In our work in Burkina Faso, water shortages and low soil fertility represent the most important constraints limiting production. Economic constraints limit the extent to which these agronomic constraints may be relaxed by new technologies. Distorted prices, seasonal labor availability and marketing opportunities represent the major economic constraints t sorghum and millet production.

There is a need to address the agronomic and economic constraints simultaneously by examining farmer behavior and response to new

opportunities. The agronomic technologies are considered a given for this project — we look at how the proposed solutions interact with the economic constraints. Our results have suggested needs for research by other disciplines, however.

In specific West African countries, new technology development is in different stages. In Burkina Faso, excellent agronomic results for improved water conservation and fertilization of sorghum have been achieved. More systematic farm level technology evaluation is necessary to compare and contrast the profitability, risk and potential to fit the new technologies into production systems of farmers in these countries.

Research Procedures

The research procedures for this project are therefore to develop models of representative farms in Burkina Faso. Linear programming models of farming activities have been developed and will continue to be developed for several regions in Burkina Faso. This technique is ideally suited to new technology adoption and for identifying the major constraints to sorghum and millet production. Farmers are viewed in this approach as possible risk averse profit maximizers. Considerable literature in agricultural economics defends this as an appropriate objective driving farmer behavior. The linear programming model then goes well beyond what is possible through partial budgeting, as resources for which there are not well developed markets or for which the farmer's endowments are fixed may be explicitly considered. Seasonal labor, which has emerged as one principal constraint in Burkina Faso to certain fertility enhancing and water conservation technologies, is an excellent example of such a constraint. The models indicate levels of technology adoption, profitability of proposed new technologies and the opportunity costs of constraining resources. Careful interpretation of these results leads to identification of the key constraints and possibly to redesign of the new technologies.

In the ongoing research of PRF-5, these farm level models are being integrated into agricultural sector models so that policy can be explicitly investigated. To facilitate that modeling effort, complementary research on marketing linkages between farmers and urban areas and on urban consumption patterns is underway. These studies will provide information to be used in the agricultural sector model. The agricultural sector model will then determine market equilibrium and hence prices faced by farmers under

alternative policy scenarios. In our work in Niger and Sudan, we have been using economic models to try to simplify the modeling of linkages between policy and farm prices. Given the success we have had in that effort and the need to devote considerable effort to developing good farm models, which are crucial to our analysis, the sector modeling can be reasonably deemphasized.

Project Findings, Progress and Future Directions

Research to date illustrates both the utility of whole farm modeling in understanding the technology adoption process and the importance of prices, as affected by policies, in conditioning the decisions taken by farmers. While most of the research is part of a longer term effort and is still underway, several specific research findings of considerable interest have emerged.

Three projects are underway as part of the PRF-5 effort in Burkina Faso. Mike Roth's has constructed representative farm models for five regions in Burkina Faso. He is now placing those models into an agricultural sector model in order to examine policy and pricing issues. A study by Ann Bukowski of the marketing system is nearing completion and will be used to set the market linkages in Roth's sector model. Kimsey Sawadogo's analysis of consumer demand is also nearing completion. It is being used to develop demand linkages of the sector model. Linda Ames is now in Burkina Faso to follow up on the farm level modeling begun in Roth's project. Ames will consider the implications of risk and other constraints impeding farmer adoption of new millet and sorghum technologies.

The farm models developed in this project point to the critical importance of economic factors in technology adoption. Agronomic research has pointed to the crucial problems of low soil fertility and water shortages in millet and sorghum production. Tied ridging has been proposed and investigated as a solution. On farm trials indicated that this technology can have a significant impact on yields. The whole farm modeling, however, indicates that the time when ridges are constructed are when labor is most scarce. Labor annot be hired during this crucial period, and opportunity costs of labor are extremely high. Partial budgeting offers no way of making any assessment of this seasonal labor availability question. With the whole farm model, animal traction as a way

of breaking that bottleneck was investigated, and was shown to be a necessary input to this technology. Field research in Burkina Faso, partially as a consequence of this collaboration, has looked at the design of implements to allow construction of tied ridges with animal traction and less human labor inputs, and has also looked at altering the timing of the construction of ridges. As a result, proto-type animal drawn tied ridgers have been developed and are presently being field tested during this crop season. This research has also demonstrated the key role played by fertilizer prices in determining the profitability to farmers of this new technology.

The marketing study which is part of this project has shown that substantial marketing costs separate producer and urban prices and restrict the flow of grain between rural regions in Burkina Faso. These high costs are due to poor road networks and the assembly costs paid to marketing agents who handle grain. The large number of market intermediaries makes this cost high. These transportation limitations are significant in our policy modeling effort. They allow us to limit grain flows in the analysis to those between rural areas and urban centers. They also show that in spite of these high costs, markets appear to be competitive, so that price changes in the cities will be reflected in farmer prices.

The study on consumer demand indicates that millet and sorghum consumption depend more on income and prices than previously believed. Estimates of income and own price elasticities of demand are higher than is typically assumed for a West African country. While the budget shares of millet and sorghum are shown to fall relative to wheat and rice as income increases, the results do not indicate strong price driven substitution between traditional and modern cereals. Income and demographic characteristics are more important in the data analyzed.

The studies of policy analysis, marketing, and consumer demand will be completed in Year 7, while the farm modeling will continue into Year 8. Ames will return from the field in early 1986, and the results of that research will subsequently be documented.

The several studies referred to above are described in more detail in the PRF-5 annual report.

Institution Building

Student training has always been an integral part of this project. Currently three African and two American students are associated with this project. Two of the Africans have received Master's degrees and have already returned to Burkina Faso. The third African is nearing completion of his Ph.D. and will return to Burkina Faso shortly. While INTSORMIL has provided funding for only one of these students, they have benefited from their association with INTSORMIL through their work with Sanders and Abbott and the collaboration between INTSORMIL and FSU, the entity which funded these students.

In addition, Ms. Linda Ames is a Ph.D. candidate at the Food Research Institute, Stanford University and is receiving training in farm level evaluation of new technology. Ing. Sibiri Sawadogo, Director of Farming Systems at IBRAZ in Burkina Faso will also be coming to this department for Ph.D. training in the summer of 1986.

Our collaboration with SAFGRAD/FSU and with the Director of Studies and Planning in the Ministry of Rural Development has also led to improved research skills of personnel in those organizations. The field experiences of the PRF-5 research assistants have been invaluable in that regard, in addition to their educational value to the research assistants.

Networking

Sanders has traveled twice to Burkina Faso to maintain collaborative research ties with personnel in the field. On his second trip Sanders also attended the Workshop on Developing New Agricultural Technologies held in Burkina Faso with SAFGRAD and presented two papers arising from this project at that conference. Dates for Sanders' travel to Burkina Faso were September 10-25, 1984 and March 28-April 13, 1985.

Kimsey Sawadogo also attended the Workshop in Burkina Faso, where he presented a progress report on his study. Linda Ames has recently gone to Burkina Faso, under PRF-5 support, to continue our interaction with SAFGRAD and FSU.

The primary outlet for information generated by this collaboration is through publication of various kinds, including conference papers, and presentations by researchers.

General Comments

INTSORMIL research in Burkina Faso examines the economics of new technology adoption for millet and sorghum production. Agronomic constraints define the environment and the problems which must be solved in order to expand output. Economic constraints determine the acceptability of proposed solutions. Those economic constraints exist at the farm level, based on farmer behavior, and at the national level, where policy distortions condition the incentives faced by farmers. The agronomic and economic constraints must be addressed simultaneously to identify successful new technologies and to provide information to researchers and policy makers on the production and diffusion of new technologies.

The agronomic constraints found to be most binding are water shortages and low soil fertility. A variety of new technologies have been considered which address these problems. In Burkina Faso, tied ridges permit water conservation and make moderate levels of fertilization more profitable and less risky. Whole farm modeling based on linear programming points to seasonal labor shortages as one crucial economic constraint limiting the adoption of these new technologies. In the case of tied ridges, labor demand during the first weeding period determines the extent to which this technology is adopted. In that period, the value of labor to the family farm is approximately ten times average wage rates during the year, but labor is neither bought nor sold.

This research shows the effect of market failure and policy distorted agricultural prices on incentives to adopt new, modern technologies. Input subsidies, both for fertilizer and credit, are important components of this policy environment, and of the effectiveness of policy reforms. Agricultural sector modeling is being used in Burkina Faso to comprehensively study the link between policy and incentives to adopt new technology. Because of the resources needed to implement these farm models and because of their primary interest to the national research organizations, macroeconomic analysis is to be deemphasized, and farm level analysis of the constraints to increased sorghum and millet production will be emphasized.

The farm level models are used in conjunction with agricultural research to evaluate new technological alternatives and to make an input into the agricultural research design process. In Burkina Faso, we have

already seen SAFGRAD explore alternative timing of tied ridge construction and the design of implements to facilitate animal drawn tied ridging to overcome the seasonal labor constraint. We expect this interaction between economic analysis and agricultural research to continue as part of this project. The interaction should be of benefit to both biological and social scientists.

Central America and Caribbean

Billie R. DeWalt
University of Kentucky

Collaborative Program

Institutions Involved

University of Kentucky

Inter-American Institute for Cooperation on Agriculture

Memorandum of Agreement was signed on August 15, 1983 for a duration of three years.

Objectives

The Inter-American Institute for Cooperation on Agriculture (IICA) is the specialized technical cooperation entity for rural development of the Inter-American System. It has permanent offices and is engaged in technical cooperation efforts in every member country in Latin America and the Caribbean. The collaboration between IICA and INTSORMIL has the following objectives:

1. To cooperate with the countries in the improvement of low income agricultural groups.

2. To cooperate in the strengthening of the sorghum and millet programs of the main agrarian institutions of the countries.

3. To aid in the adjustment of international cooperation so as to help fill the agricultural development needs of the countries.

Implementation of these objectives is primarily through analysis of significant constraints in the cultivation, marketing, and consumption of sorghum and millet, and technical cooperation in attempting to alleviate these constraints.

General Comments

Because of IICA's presence throughout Latin America and the Caribbean, it is especially well-suited to assist in building networks to assist in the regionalization of INTSORMIL's research. Although the collaboration thus far has been limited to the sharing of information regarding sorghum and millet systems in Central America and the Caribbean, IICA should be involved more directly in implementing the global plan for research in these two regions. During the planning meetings for future research in the Caribbean and Central America, IICA should be represented.

COLOMBIA

Lynn M. Gourley
Mississippi State University

Collaborative Program

Institutions Involved

Host Country:

The National Program of Colombia, Instituto Colombiano Agropecuario (ICA), is the primary collaborating institution. The linkage with ICA is a strong informal collaborative research effort. ICA has provided land, facilities, personnel and active administration support at the National level and at the La Libertad and Carimagua stations in the llanos. The only request they have made on INTSORMIL resources is for Al-tolerant sorghum germplasm, technical support and guidance, and future degree training for their young sorghum research staff.

The Agricultural University of Palmira is interested in having some of their Ing. Agr. candidates conduct their thesis research under the guidance of the INTSORMIL principal investigator at CIAT. One student is presently working with Dr. Flores.

The selection of the International Center, CIAT, as the operational headquarters for the prime site research has been ideal. The infrastructure, core of professional staff researching production problems of other crop species on acid soil, research supply import and finance privileges, equipment, various research laboratories and substations and CIAT's outreach programs throughout South America have saved INTSORMIL time and money in the pursuit of research objectives.

U.S.:

Mississippi State University is the lead institution in the South American ecogeographic zone by reason of a full-time Department of Agronomy staff member being assigned at CIAT, Cali, Colombia. Dr. Catalino I. Flores, PI MSU-11, replaced Lynn Gourley as Project Leader in January 1985 at CIAT. This project "Adaptation of Sorghum and Pearl Millet to Highly Acid Tropical Soils" is a breeding project. Project MSU-4, Lynn Gourley PI, will continue to provide backstop support for MSU-11 as needed. Advanced degree training at Mississippi State University or other INTSORMIL universities will also complement this research effort. It is estimated that 30-40 man-days from MSU-4 PI will be spent evaluating regional trials

and assisting with breeding activities in South America. Computer support for the breeding bookkeeping system will continue to be accomplished at Mississippi.

Winter and seed increase nurseries are conducted in cooperation with MSU-11 at CIAT-Palmira.

Nebraska INTSORMIL scientists, Clark NU-14 and Andrews NU-15, are also supporting research efforts in Colombia. Leaf tissue of plants growing on acid soil is being assayed for mineral content in Clark's laboratory and pearl millet germplasm and counsel are provided by Andrews.

Kansas State University (Stegmeier KSU-1 PI) provides pearl millet germplasm for Al-tolerance screening.

Purdue University (Axtell PRF-3A PI) provides sorghum world collection lines for screening and conducts winter breeding nursery activities in cooperation with MSU-4 and MSU-11 at CIAT-Palmira.

Memorandum of Agreement:

Research in Colombia was formally initiated by a Memorandum of Intention signed by the Directors of INTSORMIL, ICRISAT and CIAT in 1981. CIAT invited INTSORMIL to conduct research at their facilities after the question of mandated crop species had been cleared with ICRISAT. A Memorandum of Agreement between the National Program of Colombia (ICA) and INTSORMIL has been prepared but not signed.

Other:

The National Program of Colombia would like to sign a Memorandum of Agreement with INTSORMIL, but ICA officials have also stated that collaboration will continue even if no agreement is signed. Another approach would be to prepare an agreement with the Andean Pact countries. Officials in some Andean Pact countries feel left out even though we are collaborating with them in germplasm exchanges, workshops and regional trials. ICA is indicating more interest in sorghum research. They have separated the corn and sorghum coordinator position into two positions and have appointed Dr. Hernan Gaviria as National Sorghum coordinator. They have also increased their sorghum research staff.

Sorghum/Millet Constraints Researched

Constraints

One of the major constraints to increasing sorghum production in South America is aluminum-toxic acid soils. Colombia has almost 70 million hectares of acid soils or 57% of its total land area. These soils contain inadequate quantities of N, P, K, Ca, Mg and several trace elements for normal crop production. Traditional high-input agricultural practices have not been successful in the acid soil areas of Colombia due to the high cost and inequitable supply of production inputs for resource-poor farmers. Low-input technology requires the use of Al-tolerant cultivars and careful management of the types and quantities of soil amendments used.

Birds are probably the second most serious constraint to sorghum and millet production. Bird resistant, high tannin cultivars are used in most areas of Colombia. Pearl millet is not presently grown in the country, but birds will be a problem if the area planted to this crop is increased.

Sorghum diseases are a potential production constraint. Sorghum downy mildew is not found in Colombia, but anthracnose, charcoal rot, grain molds, and other leaf and stalk diseases can be a problem in the high rainfall areas.

Armyworms and stalk borers contribute to production losses and are potential serious constraints.

Research Progress

The most significant aspect of the breeding for Al-tolerance in this program was the decision to move the screening and evaluation of breeding lines and segregating populations to the target host country. The soil environment in the U.S. is almost totally unsuited for this activity. Using soil classification maps of Africa and the location in which a particular sorghum line was originally collected, lines have been systematically selected for evaluation from the acid soil areas.

A reliable Al tolerance field screening technique has been developed at Quilichao, Colombia. Tolerance under these conditions can be evaluated visually. The Al-saturation level of the test area is fine tuned to about 65% and other nutrients are not limiting. Susceptible genotypes die under these conditions and the remaining genotypes range from severely stunted to nearly normal healthy plants. The more agronomically desirable cultivars can be tested on the same plots in yield trials. From over 2500 sorghum

lines in the world collection that have been screened under this system, about 400 lines with good Al tolerance have been identified. A few of these lines have direct-use potential in tropical South America and Africa with good grain yields (5 t/ha) while others can only be used as breeding source material.

Another area of progress is the identification of exotic sorghum B-lines with good Al tolerance. Every B-line from the U.S. and ICRISAT tested has been susceptible to Al toxicity. Epistasis or hybrid vigor seems to be an important factor in Al tolerance. In every case when hybrids of susceptible by Al-tolerant lines were grown in soil with 65% Al saturation, the hybrids of the 3-week-old seedlings produced more roots and tops than the most tolerant parent. The potential of the newly identified Al-tolerant exotic B-lines is great and they are being used as tester females and are also being crossed to elite U.S. B-lines.

Preliminary studies show that grain and forage pearl millets have variability for tolerance to Al-toxic acid soils when grown at 1000 m elevation. The most Al-tolerant pearl millet lines will be evaluated at lower elevations at 4°N latitude to see if they have yield potential.

Mutuality of Research Benefits

This research will benefit both Colombia and the U.S. in several ways. Al-tolerant germplasm will help increase sorghum production in acid soils in both countries with less soil amendment inputs. Al-toxic subsoils in some areas of the Southeastern U.S. are a constraint to sorghum production. In Colombia the problem is more severe throughout the soil profile and acid soils cover a much larger area than in the U.S.

The major benefit to the U.S. will probably be through commercial seed companies. Multinational seed companies will use the proven Al-tolerant germplasm for hybrids in their overseas operations. Spinoff improvement of U.S. hybrids will come if there is a large enough market demand. The demand for the improved varieties and hybrids in Colombia and throughout South America should be large for these food and feed grain deficient countries.

Institution Building

Research Support

Research support funds provided to ICA have been limited due to a limited operations budget. Both MSU-4 and MSU-11 have provided travel and

workshop training funds to a total of seven ICA sorghum workers to visit INTSORMIL Al-tolerance screening sites.

A research thresher, seed moisture meters, pollination supplies and several ICRISAT and INTSORMIL training handbooks have been purchased and/or supplied to ICA staff. Sorghum germplasm (elite U.S. and ICRISAT lines) has been supplied to ICA as well as all Al-tolerant and other world collection lines and segregating populations of crosses involving these lines.

Training

INTSORMIL activities started in Colombia in 1982. Four Colombian students are currently being trained at INTSORMIL universities of Purdue, Nebraska and Mississippi State. One of the students at Nebraska is scheduled to return to the La Libertad station in the llanos to continue the germplasm evaluation trials there while another student at that station comes to Mississippi State for advanced degree training.

The sorghum coordinator for ICA is scheduled to visit INTSORMIL universities in Year 7.

Visits by Scientists

No host country sorghum/millet scientists visited U.S. institutions in Year 6. The ICA sorghum coordinator is scheduled to visit several INTSORMIL universities in Year 7.

At the end of Year 5 and beginning of Year 6 the following U.S. sorghum/millet scientists visited Colombia.

- Dr. Lynn Gourley was assigned at Cali, Colombia from July 1-November 8, 1984.
- Dr. Richard Frederiksen attended pathology meetings and traveled extensively throughout Colombia in May and June 1984.
- Drs. Ralph Clark and Rodney Foil (Board Member) made presentations at workshop in May and June 1984 and Ms. Ann Rogers a GRA attended this meeting and conducted a portion of her Ph.D. research at Quilichao and CIAT.
- Dr. A. Bruce Maunder (EEP Chairman) visited INTSORMIL research activities at CIAT and Quilichao.
- A GRA, Mrs. Nora Mason, made two trips to Colombia to conduct a portion of her Ph.D. research and to work in Purdue's winter nursery.

- A Purdue research technician worked in Purdue's winter nursery in Colombia.
- Dr. Catalino I. Flores was assigned as MSU-11 PI in Colombia in January 1985.
- Dr. Lynn Gourley harvested plots and took notes at four locations in Colombia in January, 1985.

Networking

INTSORMIL is informally linked with every country in South America in which CIAT conducts research. MSU-11 PI's have participated in CIAT training programs which provide free educational linkages with students throughout latin America and other countries. We have cooperative research linkages established with ICA-Colombia, EMBRAPA-Brazil, FONAIAP-Venezuela and INIPA-Peru in the major acid soils areas. Through these associations and INTSORMIL staff visits, germplasm and information are exchanged. MSU-11 PI attends field days at commercial and ICA research sites in Colombia, visiting with farmers and other sorghum workers about INTSORMIL and our research objectives in Colombia. ICA National Program staff and CIAT farming system specialists further spread the word about our work.

In Year 7 the Acid Soils Sorghum Workshop proceedings will be published in Spanish and English and made available to Latin American and other sorghum scientists around the world.

A potential problem with networking in Latin America is not a lack of networking activities, but the lack of time to visit all of the sites requesting assistance. Some counties feel they are being left out or not getting their share of our time and attention. The word is out that exciting things are happening.

General Comments

INTSORMIL as an International organization is better able to become the collaborative glue holding the Latin American National programs in a loose cooperative, directed program than any other organization. Occasional workshops provide researchers in National Programs the opportunity for recognition among their peers. This helps create enthusiasm and the possibility to attract outside funding for their fund-starved programs and perhaps leverage our INTSORMIL funds. More bright young scientists can be

spotted for advanced training with this approach. The two best, most long lasting efforts to improve collaborative research are workshops and advanced degree training. The best part about this regional effort is that we can train our own replacements and work ourselves out of this job and perhaps into others that become evident.

Another recommendation would be contacts with regional organizations such as the Andean Pact and Southern Cone country meetings. Even joint agreements with these organizations might help provide funds for more regional efforts.

To be a prime site host country several factors are essential. The country should be a developing country that wants our help. It must, however, have the resources necessary for a high probability for success of the major research objectives, in this case large areas of acid soils. Some infrastructure for sorghum and millet research must be in place and in our case ICA and CIAT both add to our program. Some National Program staff should be working on the problem or available to help. A compatible philosophy of the type of end-product of research and its uses is necessary, in this case low-input or high-input technology. Available transportation (airport) and communication (telex and telephone) systems are indispensable. More than 10 years ago another international organization looked at these and other factors and Colombia was chosen as the site for CIAT.

Brazil and Venezuela are middle income countries with many trained scientists, a good infrastructure, and would have fewer problems with the application or use of the technology developed by INTSORMIL. Venezuela in particular and Brazil to some extent have chosen a high-input production philosophy for sorghum production while Colombia has insisted on technology that was applicable to resource-poor farmers. The acid soils of Peru are separated from large population centers by several mountain ranges. The Amazonian area also presents more problems with jungle vegetation, high rainfall, less of a transportation system, etc.

There are some difficulties with Colombia as a host country, but her National Program staff will aid us in our efforts and her industrious farmers will apply INTSORMIL germplasm and technology if it produces an economical return.

Dominican Republic

Ralph Neild
University of Nebraska

Time period covered January 1, 1985 - June 30, 1985.

A scientist was available to begin work in the Dominican Republic (D.R.) July 1, 1984, but the program was delayed pending budget approval of in-country support by USAID, Washington and the Dominican Republic agriculture office.

Collaborative Program

Institutions Involved

University of Nebraska and Secretary of Agriculture, D.R.

Memorandum of Agreement - between INTSORMIL and Secretary of Agriculture signed June 30, 1985.

Sorghum/Millet Constraints Researched

Research procedures:

1. A collection of white seeded "food" sorghums are being screened for adaptability at different locations and quantities of seed material needed for expanded food trials and food technology studies are being generated.

2. Possible expansion of sorghum into new marginally dry areas is being studied. Because of extreme location-to-location variation in rainfall, a network of rain gauges involving persons in government agencies, farmer cooperatives and high school students is being established.

3. Small farmers are being trained in the culture and use of sorghum in cooperation with Peace Corp volunteers and the University of Kentucky Morena Hill Project.

4. Field days are being held and a sorghum culture-utilization manual, in Spanish, is being prepared.

Progress in improving the production and utilization of sorghum in the Dominican Republic:

Following are quotes from a trip report by David Andrews, a sorghum/millet specialist with many years of experience in tropical agriculture in West Africa and with ICRISAT. Professor Andrews recently joined INTSORMIL and visited the D.R. to review breeding material in an INTSORMIL sorghum nursery in April, 1985.

"Sorghum is only recently a crop which has achieved commercial significance in the D.R. and is still rapidly gaining in popularity. Now 50,000 hectares of sorghum are planted against virtually none several years ago. CESDAs policy is to introduce white grain food types (varieties first, hybrids later) both in dryland areas and under irrigation where sorghum has often yielded more than maize."

"Dr. Wilfrido Moscoso, in charge of food processing research at Instituto Superior de Agricultura, Santiago, successfully pearls (70% + recovery) an NK bronze grain sorghum using the large IDRC continuous flow decorticating machine. In market tests on pearled grain of this type at 30 D.R. cents/lb (grain price 20 cents/lb), all production has sold immediately. Small quantities of sorghum have sold easily. A sorghum flour recipe book has been published by the institute authored by his wife, Dr. Fanny Moscoso. Largely as a result of Moscoso's work with the IDRC pearler, Molinos Dominicanos have machinery in route to produce sorghum flour."

"There are considerable opportunities for increasing sorghum production for food and feed in the Dominican Republic. Government pricing policies are making maize and especially sorghum production highly attractive to large farmers. Initial work has shown that small farmers are very receptive to adopting sorghum, and the newly introduced food grain quality varieties should be rapidly accepted. Research on sample preparation processes and tests demonstrated sorghum is acceptable as food and has been instrumental in stimulating commercial investment in pearling and milling sorghum. Agronomic research with new varieties should quickly provide a reliable basis for much needed extension information."

INTSORMIL has been in the D.R. since July, 1982 when Ralph Neild was project leader of Project NU-8. The NU-8 project was terminated and Project NU-22 replaced it when Joanne Logan was posted to the D.R. The thesis, "The Potential of Rainfed Sorghum and Millet in Southwestern Dominican Republic", was completed May, 1984. It is difficult to determine and presumptuous to claim if this project has had a major impact on progress in the production and utilization of sorghum. However, it should not be denied that we have provided impetus to the effort and made some contribution. It is disheartening to know that INTSORMIL's program in the D.R. will be terminated in December, 1986 but hopefully the experience .pa gained there will be useful to some country of similar ecogeographical zonation.

Institution Building

Equipment, vehicles, books and research support provided:

- Reconditioned inventory surplus grain plot thresher from University of Nebraska at shipping cost.
- Head thresher for seed nursery.
- Collections of sorghum research and extension publications from all INTSORMIL-involved universities.
- Collection of rain gauges for weather network.
- Projector and visual materials for field days and meetings.

Training

INTSORMIL and the Secretary of Agriculture D.R. held the first National Seminar on the Production and Utilization of Sorghum, March 26-28, 1984. Six INTSORMIL scientists from Kentucky, Mississippi, Nebraska and Texas joined the Dominicans in participation. Proceedings are published in Spanish.

Egypt

Jerry D. Eastin

University of Nebraska

Collaborative Program

Institutions Involved

Agricultural Research Center, Egypt (ARC)

University of Nebraska

Purdue University

Texas A&M University

Memorandum of Agreement with ARC.

Sorghum/Millet Constraints Researched

Production constraints are (1) efficient use of water and nitrogen in the Nile Valley; (2) limited land in the Nile Valley; (3) very little base research upon which to expand agriculture in the "New Lands" (reclaimed desert edges) where center pivots have been set up; (4) salinity problems; (5) utilization of sorghum flour as a wheat flour extender; and (6) the bird problem.

Limited progress has been made in salinity screening. Some of the Nebraska lines introduced into the Nile valley were reported by a New Mexico plant breeder as being among the best.

Mutuality of benefit from current research efforts lies primarily in exchange and continued improvement of germplasm.

Institution Building

Dr. Fakry Fayed, Sorghum Program Leader, has visited U.S. institutions twice on sorghum research (1982 and 1983). He brought two colleagues the second time. Mr. Mohamed Mostafa is working toward a Ph.D. degree in plant breeding at the University of Nebraska.

J.M. Maranville and J.D. Eastin visited Egypt in December 1983. Several U.S. scientists visited prior to that time.

General Comments

Improvements in collaboration with the national research program are likely only after the new AID Cairo office restructuring is completed and new people are settled in. This should be soon. Probably the INTSORMIL Director or Associate Director should make a call when in the area. ARC

administrators appear positive in the last 18 months. Lack of available INTSORMIL funds is an impediment. The Ain Shams University agronomists are dynamically interested. In all likelihood, an agreement with them would be productive.

Germplasm which does well in the upper Nile Valley does well in certain parts of Sudan (Wad Medani, Kadugli and to a lesser degree in El Obeid). Also some of the food quality concerns in Egypt (wheat flour extenders) have been fairly well researched in Khartoum. Water use efficiency research in both countries is mutually valuable. The Egyptians and Sudanese have long standing ties and get along very well with each other. Much research in each country is valuable to the other and is readily shared.

Sociocultural Constraints in the Production and Consumption of Grain Sorghum and Pearl Millet in Less Developed Countries — Honduras and Mexico

Project UK-2

Billie R. DeWalt

University of Kentucky

Principal Investigators

Billie R. DeWalt, University of Kentucky

Kathleen M. DeWalt, University of Kentucky

David Barkin (Department of Economics), Universidad Autonoma Metropolitana, Xochimilco [Mexico]

Jose Carlos Escudero (Program in Social Medicine), Universidad Autonoma Metropolitana, Xochimilco [Mexico]

Guillermo Perez Jeronimo (Department of Agronomy), Universidad Autonoma Metropolitana, Xochimilco [Mexico]

Lic. Fernando Cruz of the Instituto Hondureño de Antropologia e Historia [Honduras]

Other Researchers

M. Elizabeth Adelski, University of Kentucky

Brenda McIntyre, Texas A&M University

Pedro Vargas Gonzalez de Salcedo, Universidad Autonoma Metropolitana

Hugo Ortiz Martinez, Universidad Autonoma Metropolitana

Valentin Niembro Dominguez, Universidad Autonoma Metropolitana

Rosalia Gonzalez Ramirez, Universidad Autonoma Metropolitana

Jose Colli Misset, Universidad Autonoma Metropolitana

Uriel Sanchez Modesto, Universidad Autonoma Metropolitana

Oscar San German Alanis, Universidad Autonoma Metropolitana

Marco Antonio Callejas Fuentes, Universidad Autonoma Metropolitana

Gloria Quintero Buchelli, Universidad Autonoma Metropolitana

Summary

The purpose of the socioeconomic research in Mexico and Honduras has been to describe and document the human component of sorghum production and use. Our work has described the methods used by farmers, the problems they face in growing, marketing and using sorghum and other crops, and the relationship of sorghum with other crops that are grown in the various

regions we have studied. The major research project carried out in this year was a study of small farmers in four sorghum growing regions of Mexico.

Our work in Mexico has documented the "miracle" that has occurred in sorghum production and the kinds of problems that this miracle has indirectly created. Hybrids that have spread into Mexico from Texas have been so successful that, in the space of 25 years, sorghum production has grown from practically nothing to become the third most important crop in Mexico. Most of the new land put under sorghum production is land on which corn, the food crop of Mexican peasants, used to be grown. The sorghum now produced goes to feed poultry and swine that produce meat for the wealthy and the middle class. The result is that Mexico must import much of the corn that forms the basis of the diet of the poor. At the same time, the demand for meat has increased so rapidly that large quantities of sorghum are also imported.

Although sorghum is more drought resistant than corn, we have found that it is being cultivated on some of the best lands in Mexico. More work needs to be carried out to develop sorghum for marginal areas in which corn is not productive. Sorghum is being adopted by both large and small farmers for a number of reasons. Sorghum is generally much more productive than corn. Although the price paid for sorghum is less than for corn, the productivity of sorghum allows farmers to make a better income. However, it is not clear that when the value of the lost food crop is subtracted that farmers' families are better off.

At the same time, the adoption of sorghum as a cash crop replacing the subsistence crop of corn has resulted in a number of changes in rural life. We have found that the ways in which sorghum production is carried out takes much of the control of land and agricultural decision making out of the hands of the small farmer and allows the agencies granting agricultural credit to control production. Farmers often report that they feel like employees of the bank. Because sorghum is also highly mechanized, the demand for rural labor has declined and significant out-migration of those without land is often the result. Even those with land have less agricultural labor to perform and many of them migrate on either a temporary or permanent basis.

Institutions

Collaborating Host Countries: MEXICO: Universidad Autonoma Metropolitana — Xochimilco; Instituto Nacional de Investigaciones Agricolas (INIA); Centro Internacional de Mejoramiento de Maiz y Trigo (CIMMYT); International Crops Research Institute for the Semiarid Tropics (ICRISAT).

HONDURAS: Instituto Hondureño de Antropologia e Historia (IHAH); Ministerio de Recursos Naturales (MRN); Consejo Latinoamericana de Investigadores en Sorgo (CLAIS)

U.S.: Texas A&M University

Linkages:

- Research on sorghum in Mexican agroecosystems is being carried out under a memorandum of agreement between INTSORMIL and the Universidad Autonoma Metropolitana. The work is also part of INTSORMIL's agreement with INIA. There is also considerable informal collaboration with researchers in CIMMYT's Economics Program and with researchers from ICRISAT.
- Research on sorghum in Honduran farming systems is being carried out under memoranda of agreement between INTSORMIL and the Instituto Hondureño de Antropologia e Historia (IHAH) and the Ministerio de Recursos Naturales (MRN). There is also a memorandum of agreement with the Instituto Interamericana de Cooperacion en Agricultura in Costa Rica. The purpose of the latter agreement is to share information that will be applicable to farming systems throughout Central America and the Caribbean. There is also informal collaboration with the Centro Agronomico Tropical de Investigacion y Ensenanza (CATIE) and with the Consejo Latinoamericana de Investigadores en Sorgo (CLAIS), a regional group of sorghum researchers.
- The formal and informal agreements with these agencies and organizations is to ensure that research in Mexico and Honduras is applicable on a more regional basis.

Ecogeographic Zones Most Benefited by Research

Work in Mexico and Honduras will be of benefit in understanding the sociocultural aspects of sorghum production and utilization in Central America, the Caribbean and South America.

Research Objectives and Procedures

The overall objective of the University of Kentucky research continues to be the identification of socioeconomic constraints that work against the production, distribution and consumption of grain sorghum and pearl millet in the lesser developed countries. The more specific objectives of the farming, marketing and nutritional systems work follow.

1. To describe existing farming, marketing and nutritional systems to provide a baseline against which to measure the effects of INTSORMIL research efforts.

2. To identify the principal existing constraints on increased production and distribution of sorghum and millet to determine priorities and directions for agricultural research efforts.

3. To identify the perceived needs of farmers regarding what aspects of new technology might be of greatest benefit to them.

4. To suggest how new varieties and or technologies might most easily and beneficially be introduced into communities or regions.

5. To determine the types, quantities, and perceived qualities of foods consumed and how sorghum and millets fit within the nutritional provisioning of the household.

6. To suggest the social, economic, ecological and nutritional implications of changing production, distribution, and consumption patterns within communities, regions and nations.

Specific objectives for farming systems research in MEXICO during Year 6 were:

1. To link up the microeconomics of sorghum production with the macroeconomic situation in Mexico. We looked at how support prices, world market prices, and the competing demands for grains (i.e., for human food or for animal feed) interact with the farmers' costs of production.

2. To determine the agronomic constraints on the production of sorghum and other potential crops. The purpose is to be able to understand the agroecological constraints under which farmers operate. When these are related to the marketing system and national level economic system, it is

possible to understand the relationship among the agroecological and socioeconomic constraints.

3. To determine the nutritional implications for farmers who have switched from growing maize as a semi-subsistence crop to growing sorghum as a cash crop. Nutritional factors are important at both the micro and macro levels. We are interested in how increased production might benefit the nutritional status of the farm family. At the same time, national agricultural policies have nutritional implications. Thus, we want to be able to determine how prices, subsidies, credits, and other governmental policies affect the kind of food that is available, the price of the food, and how food is distributed in the country.

Research Procedures

Procedures used in Year 6 involved principally ethnographic research carried out by the principal investigators and students from the Universidad Autonoma Metropolitana and the University of Kentucky. Five communities in disparate ecological regions in Mexico were studied. Techniques used included participant observation and interview schedules focusing on agronomic, nutritional, and socioeconomic information.

No problems regarding achievement of objectives were encountered.

Project Output

Research in Mexico began in September, 1983 when Elizabeth Adelski began Ph.D. dissertation research on the northwest coast in Guasave, Sinaloa. The collaborative research between UAM and INTSORMIL began in June, 1984.

Because the field research in Mexico has just recently been completed, results so far have been confined to documenting the phenomenal growth in sorghum production that has occurred during the past quarter century in the country, as well as some of the macroeconomic and macrosocial effects that this has had.

Statistics on grain sorghum were not collected in Mexico prior to 1958 due to the insignificant production of the crop. Since that time, sorghum has become the third largest crop in terms of hectares sown (after maize and beans) as well as in terms of value of the crop (after maize and cotton). Between 1958 and 1980, the number of hectares sown in sorghum expanded by almost 1300% and the amount of production increased by 2772%. Over 1.5

million hectares were sown in sorghum in 1980 with yields averaging about 3 metric tons per hectare. The high rate of growth of sorghum production has been made possible by the rapid adoption of U.S. hybrid seeds.

Despite the incredible growth of domestic production, Mexico found it necessary to import over 2.25 million tons of sorghum in 1981, making Mexico the second largest importer (after Japan) of sorghum from the United States. Mexico was the sixth largest sorghum producing country in the world in 1980/81 and only the United States and the People's Republic of China used more of the grain.

The sorghum that is grown in Mexico is destined for industrial uses, principally in manufacturing animal feed. The country's development has been accompanied by an increasing demand for livestock feed such as sorghum, which comprises 74% of the raw material used in balanced animal feed.

Because sorghum has replaced both maize and wheat on land in many parts of Mexico, there is much debate within the country about the wisdom of substituting a feed crop for food crops. Approximately one third of all grains in Mexico are now destined for animal feed. In 1960, less than 5% of grain utilization in Mexico was by animals. For farmers, however, the issue is one of economics. Sorghum is generally less costly and less risky to produce than either maize or wheat. With high yields (using U.S. hybrids), increasing demand, and less risk, farmers have found sorghum to be a remunerative crop.

The economic, social and nutritional issues that arise in the context of determining the future role of sorghum in Mexican agriculture are many and varied. These issues do not come about in isolation from the technology involved in sorghum production but are intimately linked with them. For example, the vastly increased amount of land devoted to sorghum comes about largely because of the great success that has been achieved with hybrids and with improved cultivation techniques.

As Mexico struggles with an agricultural crisis that has seen it become an importer of large quantities of grains, it is clear that the socioeconomic and nutritional issues surrounding sorghum cultivation will be of paramount importance. For example, because of its higher productivity relative to maize, there is considerable interest in utilizing sorghum for tortillas. This use for direct human consumption, however, will have to compete with the use of sorghum as an animal feed.

Research Progress

We have always conceived of our farming systems research as providing input for the direction and redirection of agrobiological research. Partially because of the trends in Mexican agriculture that we have been documenting, significant shifts are occurring in research by Mexican and INTSORMIL investigators.

Biological agricultural research has been redirected toward the following:

a) Much more emphasis is being placed on research on sorghum for human consumption. INIA, with INTSORMIL collaboration, has begun efforts at several locations to breed sorghums suitable for human consumption and work is going on to find techniques for processing sorghums to make them a human food;

b) Much greater emphasis is being placed on research on sorghum for marginal lands. While sorghum has been a great success in Mexico, it has been grown on the best lands under optimal conditions — i.e., where it has replaced food crops. Work now places much greater emphasis on sorghum for marginal lands and on techniques and varieties more appropriate for small farmers.

Networking Activities

Billie R. DeWalt planned and participated in the workshop "Sorghum and Millets in Latin American Farming Systems" held at CIMMYT in September of 1984. The workshop was also co-sponsored by CIMMYT, ICRISAT, CATIE, INIA, and the Farming Systems Support Program. Kathleen DeWalt, David Barkin, and Elizabeth Adelski also participated in this workshop.

Billie R. DeWalt and David Barkin participated in the first annual meeting of sorghum researchers in Mexico held in Monterrey in October of 1984.

David Barkin and Jose Carlos Escudero visited the University of Kentucky in January 1985 as part of a research investigator exchange.

Travel in Year 7

Billie R. DeWalt expects to attend the INTSORMIL/ICRISAT workshop on seed technology to be held at CIMMYT in early October. He will also attend the CLAIS annual meeting planned for Guatemala in late October 1985. This may coincide with a regional planning meeting of the INTSORMIL group and

collaborators from Central America. If not, a separate trip to Honduras will occur. He will also attend a meeting of the Society for Applied Anthropology in March 1986 somewhere in the United States.

Kathleen DeWalt will attend the regional planning meeting in Honduras, American Anthropological Association meetings in Washington in November 1985, and the Farming Systems Conference to be held at Kansas State University in October 1985.

Publications

DeWalt, Billie R. and Pertti J. Pelto, eds. 1985 Micro and Macro Levels of Analysis in Anthropology: Issues in Theory and Research. Boulder, Co.: Westview Press.

DeWalt, Billie R. and Kathleen M. DeWalt. 1984. Sistemas de Cultivo en Pespire, Sur de Honduras: Un Enfoque de Agroecosistemas. INTSORMIL and Instituto Hondureño de Antropologia e Historia: Tegucigalpa.

DeWalt, Billie R. 1984. International Development Paths and Policies: The Cultural Ecology of Development. The Rural Sociologist 4:255-68.

Dewalt, Billie. 1984. Commentary on Diagnosis and Description. In, P. Matlon, R. Cantrell, D. King, and M. Benoit-Cattin (eds.) Coming Full Circle: Farmers' Participation in the Development of Technology. Ottawa, ONT: International Development Research Centre. pp. 90-1.

Barkin, David and Billie DeWalt. 1984. El Sorgo y la Crisis Alimentaria en Mexico. In, Sorgo y Mijo en Sistemas de Produccion en America Latina, INTSORMIL/ICRISAT/CIMMYT:El Batan, Mexico (in press). [Presentation made at workshop held at CIMMYT].

DeWalt, Billie and David Barkin. 1984. La Crisis Alimentaria Mexicana e Investigaciones en Sorgo. In, La Primera Reunion Nacional sobre Sorgo, Universidad Autonoma de Nuevo Leon: Marin, Nuevo Leon (in press). [Presentation made at workshop].

DeWalt, Billie and Susan Duda. 1985. Farming Systems Research in Southern Honduras. In, Judy F. Winn, ed. Fighting Hunger with Research, INTSORMIL: University of Nebraska. pp. 184-92.

DeWalt, Billie. 1985. Farming Systems Research in Mexico. In, Judy F. Winn, ed. Fighting Hunger with Research, INTSORMIL: University of Nebraska.

DeWalt, Billie R. 1985. The Agrarian Bases of Conflict in Central America. In Kenneth Coleman and George Herring, eds. Central America: Background and Policy Options. Scholarly Resources Inc.: Wilmington, Delaware, pp. 43-54.

DeWalt, Billie R. and Pertti J. Pelto. 1985. Microlevel/Macrolevel Linages: An Introduction to the Issues and a Framework for Analysis. In, Billie R. DeWalt and Pertti J. Pelto, eds. Micro and Macro Levels of Analysis in Anthropology: Issues in Theory and Research. Boulder, CO: Westview Press, pp. 1-21.

Pelto, Pertti, J. and Billie R. DeWalt. 1985. Methodology in Macro-Micro Studies. In, Billie R. DeWalt and Pertti J. Pelto, eds. Micro and Macro Levels of Analysis in Anthropology: Issues in Theory and Research. Boulder, CO: Westview Press, pp.1-21.

DeWalt, Billie R. 1985. Microcosmic and Macrocosmic Processes of Agrarian Change in Southern Honduras: The Cattle Are Eating the Forest. In, Billie R. DeWalt and Pertti J. Pelto, eds. Micro and Macro Levels of Analysis in Anthropology: Issues in Theory and Research. Boulder, CO: Westview Press, pp. 165-86.

DeWalt, Billie R. 1985. Mexico's Second Green Revolution. Mexican Studies/Estudios Mexicanos 1:29-60.

DeWalt, Billie R. 1985. Anthropology, Sociology, and Farming Systems Research. Human Organization 44:106-14.

DeWalt, K.M. 1984. Including Nutritional Issues in Farming Systems Research. Invited lecture for the workshop, Sorghum and Millet in Farming Systems in Latin America, INTSORMIL/CATIE/ICRISAT/CIMMYT, Mexico, September 16-20, 1984.

DeWalt, Kathleen. 1984. Nutritional Strategies and Farming Systems Research in Southern Honduras: The International Sorghum and Millet Project. In C. Flora (Ed.), Animals in the Farming System. Proceedings of Kansas State University's Farming Systems Research Symposium. Manhattan, Kansas.

DeWalt, K.M. n.d. Including Nutritional Issues in Farming Systems Research. In B.R. DeWalt and C.Paul (Eds.), Sorghum and Millet in Farming Systems in Latin America. INTSORMIL/CATIE/ICRISAT/CIMMYT: Mexico, forthcoming.

Changes in Year 7 Project Plans

During Year 7, Kathleen DeWalt and Billie DeWalt will be on sabbatical at Cornell University. During the year they will undertake the final analysis of the farming systems data collected in Honduras during 1981-84 and that collected in Mexico during 1984.

India

David Andrews
University of Nebraska

A basis for a collaborative program is being sought appropriate to the Indian subcontinent through AID/DELHI. It is proposed that breeding and physiology (seedling establishment, moisture stress and plant nutrition) collaborative projects be located in Northwest India. Due to the adequate status of scientific manpower in India there would not be a training component. The program would emphasize germplasm exchange and involvement of INTSORMIL personnel expertise in the field in cooperatively planned experiments.

Kenya

John A. Mann
Texas A&M University

Collaborative Program

Institutions Involved

Kenya - Ministry of Agriculture and Livestock Development
Coast Agricultural Research Station, Mombasa, Kenya
National Drylands Farming Research Station, Machakos
Western Agricultural Research Station, Kakamega and Alupe
OAU-SAFGRAD/ICRISAT
IDRC

U.S. - Texas A&M University

Memorandum of Agreement

The project in Kenya had its conceptual origins during August-September 1984. The development of the project has been slow, both due to the cautious nature of the Ministry in accepting new projects, and because of the uncertainty surrounding the proposed USAID project which may include a sorghum and millet portion. By the last of Year 6, the Ministry (in the person of the Director of Research) was ready to sign a Memorandum, but USAID was advising caution. The USAID mission is, with other donors, trying to coordinate and consolidate donor projects, and because of that advised against an agreement at this time. Therefore, at the conclusion of the year no official agreement exists. Unofficial, scientist-to-scientist collaboration is being strengthened, and has been effective.

By the end of the year it was becoming obvious that a great number of opportunities for collaboration will be opening soon. Cereal researchers in every part of the country from the Ugandan border to the coastal plain are interested in both sorghum and pearl millet, and are anxious to have collaborators. Most work on these crops has been done in relative isolation from the world scientific community, and many good people are anxious to get in touch with what is happening in the U.S. and elsewhere. The long-awaited USAID project, while still on the horizon, seems certain to contain a sorghum/millet component, and it seems both the Ministry and the Mission look with favor on INTSORMIL's participation. The potential size of that project gives INTSORMIL perhaps a unique chance to buy into a situation where both money and time will be adequate to accomplish the training and

collaboration necessary to set Kenya firmly on its feet for sorghum/millet production.

Production and Utilization Constraints

Sorghum. A number of constraints exist for sorghum production and utilization in Kenya. Poor general adaptation of the crop to the environment is chronic, due at least in part to the sources of germplasm used. Serena and Serado, as well as most of the breeding lines in Kenyan programs, are derived from the Serere program of Drs. Doggett, Majisu, Makuru et al. Because of the prevailing weather patterns in Uganda, the material tends to be too late and have too little drought tolerance in Kenya. In addition, germplasm now being introduced from ICRISAT seems well adapted but has very little diversity. New and diverse germplasm, especially with drought tolerance and good tropical adaptation, is essential. A second constraint to production is the "bird" problem, which is at once a problem of inadequate human resources and the perception that birds are a serious pest problem. As discussed in the TAM-32 annual report, birds are a problem only on a local scale, as Kenya nor any other East African country has ever recorded nation-wide losses in excess of 5%. The fact that certain farmers may be totally wiped out has left the impression that everyone who plants sorghum or millet will suffer a similar fate. Because the hectarage of these crops does not (indeed cannot) affect the bird populations, then one answer would be to vastly increase the area planted to susceptible crops, and thus dilute the damage.

The chief utilization constraint is associated with the presence of a pigmented testa on much of the sorghum grown in Kenya. (It should be noted that millets are highly preferred for "uji", and as such do not suffer as much as sorghum from utilization constraints.) While many of the local types grown in traditional growing areas such as Western Province have a testa, they have a reputation for getting "sweeter" as they mature, and producing an acceptable food product. The testa on improved types is different, at least to the farmers, and these cultivars suffer the reputation of producing a bitter food product, and have poor storage characteristics.

Sorghum Constraints Researched

Research in Year 6 has been concentrated on producing sorghum germplasm suitable for the Kenyan environment and farmer. Work has concentrated on food quality sorghum types, but some emphasis has been placed on high tannin types, as they are preferred in some localities. A major thrust of the program has been to incorporate genetic male sterility into a large number of Texas elite lines, and this is at the stage of the third backcross into those elite materials. In Year 7 these will be combined into synthetics and tested against hybrids and lines to determine the amount of hybrid vigor possible in combinations of three and four lines. If the material comes close to theoretical maximums, then a way will be opened to produce a seed source for small farmers which has hybrid vigor, at the same time allowing seed to be used for several generations without significant yield reductions. Work is continuing on improving grain weathering and food qualities of tall progenies (1.8 - 2.2m) from Dr. Miller's NaOH and TP24 materials. Because the project is relatively new, substantial end-product results are a few more seasons down the road.

Mutuality of Research Benefits

The crosses of elite lines onto TP24 to incorporate the Ms3 gene into the elite lines has had two results which should be useful to the U.S. as well as Kenya. The full-sib offspring of these crosses and backcrosses have provided some very productive lines which are now included in the TAES pedigree program, and some which may well be released in Kenya. The sterilized elite lines will also be very useful to those breeders in the U.S. who use population breeding techniques in their programs; this in addition to the production of synthetics for Kenyan conditions. Even though this project is entirely oriented towards Kenya and East Africa, many potential benefits to the U.S. are being produced.

Institution Building

Because of the late startup of TAM-32, institution building efforts had just begun as the end of Year 6 arrived. Approximately $2,000 worth of research supplies were purchased with the last of Year 6 funds, with the effort to be expanded in the next year. These supplies included 12 staple pliers and 200K staples, and 82,000 pollinating and selfing bags. The staple pliers and staples were hand carried, and put into immediate use, as

bags were being tied onto sorghum and millet panicles with twine. These kinds of contributions will be very useful to the Kenyan program.

While no Kenyans have been trained to date on TAM-32, Mr. Newton Ochanda, who took an M.S. degree with Drs. Rosenow and Miller, is now the sorghum breeder for the Western Province area of Kenya. He has established a sound breeding program there, and while his program needs inputs of germplasm and equipment/supplies, he represents a good example of what INTSORMIL institutions can provide in the way of education and training. He has become a strong collaborator with TAM-32, and this relationship should continue to strengthen and expand. Many of the local sorghums in that area of Kenya may be useful in the conversion program, as they are characterized by having testas, yet becoming "sweet" at maturity.

No Kenyan scientists visited the U.S. under the sponsorship of TAM-32 in Year 6. However, during the year all details of such a visit were cleared, and Year 6 money was used to purchase air tickets for the visit of Mr. F.L. M'Ragwa Riungu to Texas, Nebraska, Kansas and Purdue during the first three months of Year 7. Mr. M'Ragwa is the pearl millet breeder at the Katumani station (N.D.F.R.S.), and will be in the U.S. for a two month visit/practical training exercise.

Networking

Most of the limited networking being done at present is within the scope of the SAFGRAD/ICRISAT workshops, and consists of germplasm distribution to most of the countries in East Africa. Direct communication with most of the sorghum/millet workers in East Africa has allowed a good amount of cooperation. Plans have been made to send a 50 entry nursery to all of the countries in the region, based on prior experience in Tanzania. Within country networking has been limited to date to those working within the research establishment.

General Comments

The project in Kenya was started as an effort to keep alive the work begun in Tanzania during the ill-fated FSR project there, but shows every sign of becoming a project which will equal any within INTSORMIL for quality and quantity of involvement. Kenya offers a cadre of trained and enthusiastic personnel, good infrastructure and political stability. It is a key country in USAID's Africa strategy, and will be among their targets

for agricultural research development. With these positives comes the fact that agricultural research in the country needs assistance of the type INTSORMIL is so well equipped to provide. INTSORMIL germplasm is well adapted, there are no language barriers, and our scientists will be able to move into collaborative relationships quickly and smoothly.

Mali

Arthur B. Onken
Texas A&M University

Collaborative Program

Institutions Involved

Institute of Rural Economy, Mali
Texas A&M University
University of Nebraska

Memorandum of Agreement

A Memorandum of Agreement to allow transfer of funds was signed in Mali on October 10, 1984. On that same date a workplan with budget was signed for 1984-85. The 1984-85 workplan and budget had been developed and approved by the IER in April, 1984. Also in Mali, in October 1984, a tentative workplan and budget for 1985-86 were prepared for submission to INTSORMIL. INTSORMIL approved the tentative workplan and a budget for 1985-86 and these were signed in Mali in April, 1985.

Other

Communications between the U.S. and Mali have improved somewhat, but are still difficult, at best, due to unreliable telex service in Mali. Our relationship with the AID Mission in Bamako has improved and S.K. Reddy has been of great help. Now that a pattern of necessary administrative steps has been established, fine tuning the timing of reports and funds transfers should result in a much smoother operation. In addition to the research to be conducted under the workplan for 1985-86, an opportunity for a technical assistance mission developed. A doctoral level graduate student in plant physiology at Texas A&M will travel to Mali in September and October to teach Malian scientists and technicians techniques in making physiological measurements on sorghum related to drought tolerance. Equipment for this research is being furnished by the USAID Mission in Bamako through a training agreement with ICRISAT. INTSORMIL and TROPSOILS are trying to establish an integrated program in Mali. The IER administration views this favorably but some problems need to be worked out with the scientists involved.

Several problems in addition to those in the current INTSORMIL and TROPSOILS workplans will need to be addressed in the very near future. The

credibility and use of the soil testing laboratory at the Sotuba Experiment Station need to be increased. A large number of years of research with crops, irrigation, cropping systems, and fertilizers has much less meaning (in some cases, none) due to a lack of soil chemical characterization. If agronomic data are going to be interpreted correctly and be of value, it is essential that the chemical characteristics of the soil be defined. Formulating a plan to develop this laboratory to the level needed should be a high priority of all agencies and programs involved in agronomic research in Mali. Additionally, preliminary soil chemical data indicate that the sandy soils of Mali, even those in the Sahelian zone, are acid and of very low cation exchange capacity. It is probable these soils are fragile chemically and will need to be treated with care. It would be relatively easy to do irreparable damage to these soils with the wrong chemical applications. Research is badly needed to determine chemical reactions in the soil of Mali.

From the standpoint of enthusiasm of Malian and INTSORMIL scientists, support of the IER, the USAID Mission in Mali, and ICRISAT, Mali, the potential for highly significant collaborative research in Mali is very great. All the necessary components are present and this program represents one of the best opportunities to meet our mandate under the Title XII program.

Sorghum/Millet Constraints Researched

Production and Utilization Constraints

Yield stability in sorghum/millet production is of major importance where food production is marginal relative to population. Low soil fertility, drought, diseases and insects are major contributors to yield instability. They also result in changes in grain quality such that it becomes unfit or undesirable as human food. There are strong interactions between such factors as soil fertility and soil water use as well as insects and diseases and grain quality.

It has long been assumed that water was the first limiting factor to plant growth in much of the semiarid tropics. However, Stroosnijder and his associates from the University of Wageningen have shown conclusively that due to a lack of nutrients, principally N and P, usable water is left in the soil profile even by native range plants in the Malian Sahel. We have determined that on Alfisols in Texas (same soil family as many in SAT areas

of Africa) usable water is left in soil zones of low nutrient supply. Consequently, we feel that we should determine the relationship between nutrient use efficiency and water use efficiency in plants under low nutrient conditions.

Laboratory analysis of soil from the semiarid areas of Mali and Niger show an unexpected high proportion of very acid (pH < 5.5) soil with low cation exchange capacities (1-2 meq/100 g) but a high percentage of exchangeable aluminum (50%). These soils should be checked for potential aluminum and manganese toxicities and calcium, magnesium and potassium deficiencies. In order to make the best possible progress in sorghum production in developing countries, it will be necessary to understand the soil characteristics. This information is lacking.

Research Progress and Results

Dr. Lloyd Rooney of Texas A&M University has been working collaboratively with the Malian Cereal Quality Program. This collaboration has resulted in significant progress in determining factors that affect tô and couscous quality. Village level trials have been conducted to document the relations between extent of sorghum and millet dehulling to tô acceptability. The use of this information through a rapid minitest for tô quality, Dr. Rooney helped devise, is being used effectively in Malian and ICRISAT sorghum and millet breeding programs.

The collaborative breeding program of Dr. Darrell Rosenow, Texas A&M University, with Dr. Oumar Niangado and Mr. Maribo Konate of the IER has resulted in identification of certain traits of the Guineense type sorghums grown in Mali that must be maintained in improved sorghum for that country. Several of these types are in the Sorghum Conversion Program and one day length insensitive Malian Guineense type is currently being tested in Dr. Rosenows' drought program at Lubbock. Transfer of desirable traits to these sorghums will require a major breeding effort in Mali, but can be greatly aided by efforts with converted lines in U.S. breeding programs.

Dr. Rooney is also furnishing expertise in consulting with the IER in design and equipping an addition to their current food technology laboratory.

Research Benefits

The identification of sorghums through development and use of appropriate screening techniques for drought tolerance and nutrient use efficiency will benefit both African and U.S. sorghum producers. Sorghum breeders from Mali and the U.S. have access to a much wider range of germplasm through a collaborative program than they would otherwise have available. The delineation of grain characteristics responsible for various aspects of quality will have effects on utilization both in Mali and the U.S. and will furnish plant breeders in both countries with necessary information for selection of sorghum and millet types for particular uses.

Institution Building

For 1984-85, INTSORMIL funded research in Mali at $11,100. In addition INTSORMIL purchased in cooperation with TROPSOILS a Toyota pickup at approximately $11,250. INTSORMIL furnished a technical assistance mission by Dr. Lloyd Rooney.

Several Malian students are currently on INTSORMIL funds but have not completed training.

INTSORMIL scientists who were in Mali in 1984-86:

Art Onken	October, 1984 and April 1985
Darrell Rosenow	October, 1984
George Teetes	October, 1984
Lloyd Rooney	March, 1985

Networking

Each year, in March or April, a research review is held in which each scientist distributes a written report of the previous year's research results and gives an oral presentation to all scientists (expatriates included) conducting agronomic research in Mali. A question and answer session follows. A West African Regional Sorghum Workshop sponsored by ICRISAT is held in October or November each year and research results are reported by country scientists. This will include research supported in part by INTSORMIL. SAFGRAD, which works closely with farmers at the village level, has representatives at each of these meetings.

General Comments

One of the keys to strengthening the collaborative research programs lies in training. Probably the most important training aspect is at the

graduate level. Students receiving M.S. and Ph.D. degrees from U.S. institutions will not only have a good scientific education but will understand the workings of American institutions which will facilitate in-country research efforts. It is somewhat difficult to conduct collaborative research with scientists educated in France and/or Russia.

Short term training will also be of benefit not only for host country scientists to learn the backstopping ability of U.S. institutions, but also for host country administrators. I believe that host country administrators will be easier to negotiate with when they have a better understanding of U.S. institutions, staff, facilities, and level of commitment.

Mali is part of the West African ecogeographic zone. It is related to the prime site host country, Niger, in that both are French speaking and have extensive crop production areas in the Sahelian ecological zone. Also, sorghum and millet are extensively used for food in both countries. The soils and farming systems in Mali are somewhat different. There are fewer large areas of fairly uniform topography and most farming takes place in a ridge-valley system. Very dramatic changes in soils and crops occur over short distances. Mali has some areas of higher rainfall than Niger. Natural resources that contribute to the national economy are more abundant in Niger than in Mali. Communications by telex and telephone are very much easier and more reliable between the U.S. and Niger than between the U.S. and Mali. Research conducted in Mali would be applicable to other areas of West Africa including Niger, but probably more to Burkina Faso and Senegal.

Mexico

Fred Miller
Texas A&M University

Collaborative Program

Institutions Involved

University of Sonora, Hermosilla, Mexico
Universidad Autonoma de Nuevo Leon, Marin, N.L. Mexico
Instituto Nacional de Investigaciones Agricolas (INIA), Celaya, Mexico
Universidad Autonoma de Mexico, Xochimilco, D.F., Mexico
Texas A&M University, College Station, Texas
University of Kentucky, Lexington, Kentucky
Mississippi State University, Mississippi State, Mississippi
University of Nebraska, Lincoln, Nebraska
University of Georgia, Experiment Georgia
ICRISAT/CIMMYT Center, El Batan, Mexico

Separate Memorandums of Agreement have been established with each of the four Mexican institutions. Funding arrangements were established this year with each except INIA. The interaction with Mexico has been established for a number of years without official MOA's. Because Mexico has a close history of association with several INTSORMIL institutions, establishment of a broad, sound collaborative interaction has been easy. Sorghum in Mexico is a major economic force driven by the ease of production of high yield hybrid cultivars. Sorghum is widely grown and known in Mexico. Because sorghum is adapted to a wider range of environmental conditions than maize, sorghum is gaining popularity in Mexico at the farmer level. Because sorghum is considered most commonly as a livestock feed in the western world, there is reluctance to use this cereal as a human food resource. Most sorghum hybrid development in North America has not been concerned with quality for food use. As a result, many of the currently grown hybrids are not acceptable as a human food and are used as livestock feed or must be strongly processed before use as human food materials. Because of the shortage of maize in Mexico and the fact that sorghum can be used to replace or blend with maize for food use, there is a strong force involved to improve the production of sorghum in Mexico. And finally, because Mexico is a leader in Latin America, improvements made in Mexico's

sorghum activities will rapidly move into the need areas of Central America. It is because of these considerations that INTSORMIL scientists feel strongly that Mexico is so critical to our impact in Latin America.

Mexico has served as a central site for four international workshops on sorghum (pathology, food quality, breeding and farming systems). Another is scheduled in 1985/86. The involvement of Mexico in these workshops and the INTSORMIL advice has stimulated the establishment of an "All Mexico Annual Sorghum Reunion" which brings together 150-175 sorghum workers to discuss research needs and progress. We have a great potential to strengthen the involvement of Mexico in Latin America through INTSORMIL. Mexico suffers many of the same problems as her neighbors and is also respected. INTSORMIL can and must build on this relationship to be most effective.

Sorghum as a food resource is gaining momentum in Mexico. Research on sorghum as a food is a recognized national objective. Sorghum as a resource to reduce dependence upon maize in both the human food and livestock feed arenas is gaining widespread attention. INTSORMIL programs in Mexico and in Latin America dovetail and lead these concerns and objectives.

Sorghum/Millet Constraints Researched

Sorghum is currently of major social and economic importance in Mexican agriculture and industry and millet, potentially, can be a valuable alternative for rainfed farmland with deficient rainfall and in areas with short growing seasons due to early frosts, such as the high altitude valleys. Sorghum production can be extended to other rainfed lands and through genetic improvement, grain can be obtained for direct human consumption. Drought tolerance in sorghum is known to be high and lends stability to the productivity of this major food cereal. Drought, diseases and insects are major contributors to yield instability. Furthermore, they cause changes in grain quality such that it becomes unfit or undesirable for human food. The development of the full potentials of sorghum in an alkali food system merits major involvement in resource storage, milling, processing, cooking and product evaluation.

Research findings during this year at the Universidad Autonoma de Nuevo Leon are abstracted here.

Studies were undertaken on morpho-physiological traits of glossy sorghum screened from the world germplasm both at Patancheru, India

(ICRISAT) and at the Nuevo Leon, Agronomy Faculty, FAUANL, Mexico. These studies have indicated that glossy lines showed much variability in taxonomic classification, seedling morphology, leaf anatomical characters (both under compound microscope and scanning electron microscopy). Apart from glossiness with varying intensity, glossy lines also showed variability in the intensity of waxy bloom.

Studies on biochemical traits of sorghum in Mexico indicated that water stress had significant effect on both glossy and non-glossy lines with respect to root growth, stomatal frequency, epidermal cell number, HCN, carbohydrate, chlorophyll, wax content and transpiration. Under water stress, root growth (root length) was reduced but stomatal frequency and epidermal cell number were increased per unit area of leaf. A few glossy and non-glossy lines showed less reduction of root growth and less difference in stomatal frequency and epidermal cells under water stress compared to those in no-stress situations. It was assumed that these lines were tolerant to water stress.

Under water stress, HCN, carbohydrate and wax content increased both in the glossy and non-glossy lines but chlorophyll content decreased, thus affecting photosynthetic activity. Glossy lines, generally, were in advantageous positions with respect to these characters. There were highly significant correlations ($r = 0.90$) among the biochemical traits, HCN, wax and carbohydrate content. There was a strong negative correlation between wax content and transpiration. It has been reported that the accumulation of HCN increased the osmotic concentration, thus enabling plants to create a greater water uptake. It was also observed that biochemical traits like HCN, wax and carbohydrate content increased with the increase in the intensity of glossiness. Significant variability existed among genotypes with respect to these characters although no significant variability was observed in chlorophyll content in the glossy lines.

Glossy sorghum showed higher water use efficiency and more tolerance to water stress than non-glossy sorghum. Glossy lines showed higher water use efficiency and also higher adaptations under low phosphate situations compared to non-glossy sorghum. Glossy lines with varying intensity of glossiness and waxy bloom need to be studied for their physiological functions.

Research at the University of Sonora has progressed far beyond the small investment and interaction made by INTSORMIL. There has been significant interest to build a strong multidisciplinary program at the University. Some major projects are summarized below to indicate the nature of this work:

a) Preliminary sorghum cooking trials were made in a commercial tortilla plant in Hermosillo to become familiar with problems of scale up from the laboratory. Color of tortillas at lime concentrations greater than 0.6% were significantly different and not acceptable. Color of the tortilla deteriorated with time. Deterioration began after 20 minutes. Adding up to 20% yellow maize did not improve color of tortillas significantly. Aroma, taste and related traits of sorghum tortillas were similar to those of maize regardless of combinations of variables. Harder tortillas were obtained with lower lime concentrations and lower steeping times. A partial solution to the color problem was the removal of more lime through a more extensive washing, although this caused greater sewage contamination, more dry matter losses and more water waste, thus increasing costs.

b) Because sorghum represents an alternative to maize to produce tortillas, it is necessary to determine the fate of possible aflatoxins throughout the stages of cooking, etc. Experiments have been done on the cooking, dry matter losses and steeping using grain from field storage. Two traditional methods of nixtamalization were used to attempt the destruction of the aflatoxins. All samples have been obtained and sent for extraction and purification.

c) The development of an instant tortilla flour from a sorghum/maize mixture using a low cost extruder has shown the following:

Particle size. It was found necessary to combine, blend and homogenize the particle of sorghum and maize until an average 4 mm diameter was obtained to avoid stickiness in the masa, according to preliminary observations when preparing flours from mixtures of maize and sorghum.

Tempering. A moisture range between 15 and 17% was found acceptable to produce well cooked flakes that resulted in a rollable, cohesive masa (dough). Some stickiness was still present.

Calcium Oxide. The best way to add lime to grain was as a suspension (0.2%) at the stage of grain tempering. Higher concentrations of lime

resulted in darker tortilla color. This was in agreement with results of Bedolla (1983).

Temperature. A set of 80, 90, 100 and 110°C was tested but 90°C resulted in the most acceptable masa and tortillas. Higher temperatures caused expansion of flakes and less water absorption (i.e., 0.8 L/Kg for extruded flours versus 1.25 L H_2/Kg for commercial flours). Low water absorption indexes translated in lower tortilla yields which is not desirable.

d) The project has attempted to design and build an abrasive mill for sorghum. The mill has been constructed and evaluated for efficiency of pearling.

ABRASIVE MILL BUILT AT UNIVERSITY OF SONORA INTSORMIL-UNISON 1985

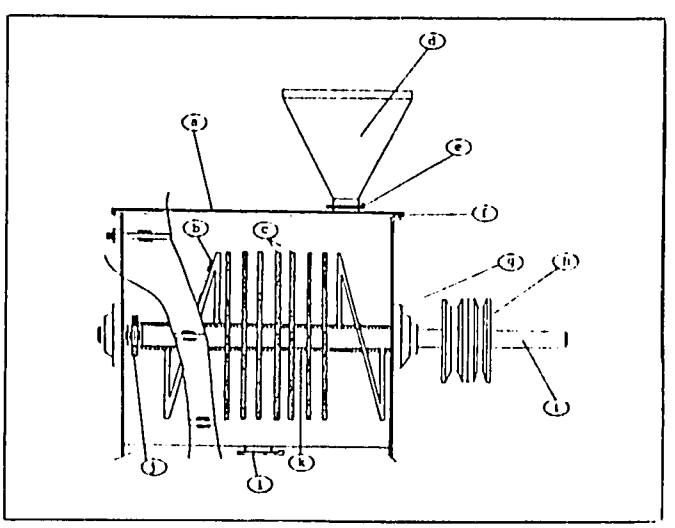

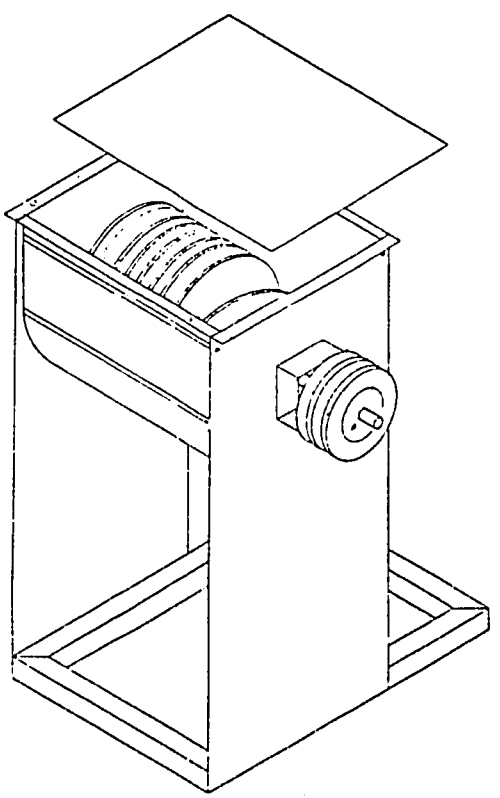

Research activities at INIA, even though not funded, have worked well in an excellent collaborative nature. The summary of this collaboration is listed below.

In this project we have been working in a cooperative effort in the following disciplines: A) Plant Breeding B) Phytopathology, and C) Entomology. Only a few of the major accomplishments of these disciplines are mentioned.

A) Plant Breeding discipline evaluated sorghum hybrids with tropical adaptation (ISTAT), segregating lines and also evaluated lines tolerant to drought stress in the field nursery (DLT). In 1983, based on the national evaluations obtained with the ISTAT materials, INIA decided to release 3 hybrids, BJ83 (ATx378 x RTX430), BJ84 (ATx623 x SC0599-IIE) and BJ85 (ATx623 x RT434). PRONASE (Mexican Government Seed Company) has made available the first two hybrids for sale. The pedigree breeding method has been used on the segregating lines. At this moment a group of 100 lines are ready to test for their general combining ability (GCA). INIA has not been able to make good selection of lines tolerant to drought stress (DLT) from material made available by Dr. Darrell Rosenow.

B) In Phytopathology the following nurseries were planted:

1. International nursery for plant disease and insects (IDIN).
2. Nursery for disease and insect resistance (ADIN).
3. International nursery for viruses of sorghum (ISVN).
4. Sorghum Downy mildew virulence nursery (SDMVN).
5. Uniform Head Smut nursery (UHSN).

From the IDIN and ADIN nurseries several lines were selected for their resistance to the most important diseases in the Bajio zone. These lines were included in the new project of breeding for disease resistance.

The ISVN nursery was very useful. It helped INIA to identify the MDMV virus races, A, D, E, F, and SCMV virus races A,D, and H using serological test with antiplasms from Dr. Toler.

The SDMVN helped us with the identification of pathogen 1, the only one present in this area, and the UHSN with the identification of head smut races 1, 2 and 3.

C) Entomology - In 1983 INIA received the nursery for stalk borer from Dr. Pitre, but it was not possible to make reliable selections due to the low incidence of stalk borer.

Institution Building

In this year $19,000 was distributed to collaborators in Mexico. There was a hold back of $1,000, and $10,000 was not committed because of no signed MOA. Workshop expenditures amounted to approximately $20,000 but this was for the entire Latin America Zone for the Farming Systems Workshop and not directly related to the collaborative program in Mexico.

Several Mexican INTSORMIL trained scientists have assumed major leadership roles in Mexico - Drs. Sandiago Bedolla, Sergio Serna-Saldivar, Alberto Betancourt and Armando Valdes are examples. Two of these are cereal chemists and two are breeders.

During the year Drs. F.R. Miller and L.W. Rooney and B. DeWalt traveled to Mexico to assist with and participate in research activities.

Sociologic research carried out in Mexico in a project at Universidad Autonoma Metropolitana - Xochimilco is summarized here[1/].

It has been argued that based on the results of the Green Revolution, Mexico presently needs to have a second Green Revolution to resolve its agricultural crisis. This experiment supports the concept that Mexico has realized a second Green Revolution which has had greater effects than the first one. The factors responsible for this Green Revolution in grain sorghum and the increased availability of meat products from pasture are the causes and not the solutions for the agricultural problems of Mexico. The internationalization of capital has brought about an agricultural sector dedicated to the production of consumer products for those that can buy luxury foods such as meat. At present, Mexico produces twice as much grain per capita as in 1940. The largest proportion is used to feed animals rather than to feed the 27% of the Mexican population which is malnourished.

This research shows that Mexico has already experienced a second Green Revolution and that this revolution has probably had more profound effects than the first. While the story of the first Green Revolution in wheat production is well know (e.g., Hewitt de Alcantara 1976; Wellhausen 1976), Mexico's second Green Revolution has occurred in sorghum. Statistics on

1/ Taken from Billie R. DeWalt. Mexico's Second Green Revolution: Food for Feed. Mexican Studies/Estudios Mexicanos 1985. Vol.1: No. 1:29-60.

sorghum were not even collected in Mexico until 1958, but by 1980 the crop occupied over 1.5 million hectares of land, more than double that occupied by wheat, the miracle crop of the first revolution.

This research relates to the causes for and the implications of the sorghum revolution. It shows that sorghum has become an important crop because it is high-yielding and therefore attractive to farmers; it fits well with the agricultural infrastructure developed and subsidized by the Mexican government; and a strong demand for it exists in the rapidly-expanding animal feed industry in Mexico. The implications of the sorghum revolution relate to the arguments about resource scarcity. That is, Mexico's increasing bill for food imports and its inability to provide sufficient food for a substantial part of its population is not due to an absolute resource scarcity in terms of its ability to produce sufficient grains. Rather, it is due both to "cheap food" policies that make growing of staple crops unrewarding to farmers and the rapidly increasing demand of wealthier segments of the mexican populace for "luxury foods", i.e., diets that include increased consumption of animal products. In Mexico's agricultural sector, sorghum to be used as an animal feed is replacing grains like maize and wheat that are capable of being used for direct consumption as human food. Mexico's second Green Revolution - the substitution of sorghum, a feed crop, for food crops - is another indicator of the unequal development that has characterized the country.

Students from Mexico are studying in INTSORMIL institutions at present and doing research on parts of the collaborative plan. More students desire to come than we can handle.

Networking

The involvement of Mexico in improvement and development of sorghum in Latin America is paramount. Mexico offers a unique situation because of the infrastructure which exists there and the proximity to the rest of Latin America.

Perhaps one of the most gratifying aspects of INTSORMIL activities is the opportunity to establish contact with scientists in other countries working on the same commodity, facing the same or different problems and to be able to develop a meaningful, productive, collaborative research program. Our goal is to share germplasm and methodologies, and to grow more productive because of the interaction. Several of these relationships have

developed in Latin and South America and more will develop.

The strongest interrelationship developed to the present is probably in Mexico.

In March, 1983, a formal agreement was signed with INIA (Instituto Nacional de Investigaciones Agricolas). We are able to do many things under this agreement that were previously impossible. However, even before the agreement was in place significant germplasm interchange was underway; students were being trained; cooperative projects were in place, etc. Following the agreement the whole system has meshed together allowing INTSORMIL, ICRISAT and INIA to easily interact on the constraints of productivity and utilization of sorghum. Presently memos of agreement have been developed with three additional agencies in Mexico. These are Universidad Autonoma Metropolitana, Mexico City; University of Sonora, Hermosilla; and Universidad Autonoma de Nuevo Leon, Marin.

Four major Latin American Workshops have been held at CIMMYT with INTSORMIL, ICRISAT and INIA cooperating on sorghum pathology, sorghum quality, sorghum breeding and on farming systems. These workshops have drawn sorghum scientists from 14 to 17 countries each year.

Mexico is a critical ingredient in the efforts to reach all sorghum scientists of Latin America.

Areas of interest and cooperation:

- Breeding for yield and stability.
- Breeding for disease resistance and insect resistance.
- Breeding for and understanding sorghum food quality and end product use.
- Identification of cold tolerance for early growth and anthesis as well as drought tolerance.

General Comments

Because sorghum is a major cereal crop of Mexico and Latin America and because its full food potential is not developed, it is necessary to develop and strengthen national programs working on the commodity. There is a strong base of interest and scientific expertise in Latin America that can be attracted through involvement with Mexico. Mexico's acceptance of modern technology is high. Mexico has good scientists working on sorghum and there is good interaction with INTSORMIL by Mexican scientists. Mexico has good

credibility with the rest of Latin America and technology can be infused into Mexico, modified, redistributed and tested, then transferred to Latin America in an easy manner. Mexico is accessible. Mexico is a good place to work and has a large array of the problems existing in other lesser developed areas also.

Mexico is critical to INTSORMIL and our involvement should be strengthened there rather than reduced.

Niger

John Axtell

Purdue University

Collaborative Program

Institutions Involved

INRAN

Purdue/Niger Cereals Research Project

USAID Mission

Niger Cereals Project

TROPSOILS

ICRISAT Sahelian Center

Ministry of Rural Economy

Peace Corps

Purdue University

Texas A&M University

University of Nebraska

Memorandum of Understanding

It was signed between INTSORMIL the Ministry of Higher Education and Research in Niger, the Director General of INRAN, and the Director of USAID Mission in April 1983.

Other Opportunities

We are currently negotiating with the USAID Mission for in-country support of an INTSORMIL agronomist to be stationed at Niamey. The plan is to request this support as part of an Agricultural Sector Grant which INRAN will submit to USAID/Niger. The Mission has given verbal approval to supply this support.

Sorghum/Millet Constraints Researched

A. Sorghum/Millet Production and Utilization Constraints Addressed by INTSORMIL/Niger Program.

1. Sorghum Breeding:

Collaborators:

INRAN:	Mousa Adamou, John Clark
INTSORMIL:	Purdue - John Axtell, Gebisa Ejeta
	Texas A&M - D.T. Rosenow, F. Miller
	Nebraska - J. Eastin

a. Germplasm Enhancement

The following is a list of sorghum breeding nurseries recently introduced to Niger by INTSORMIL for evaluation and selection during the 1985 crop season. In addition to the array of breeding material that Clark and Adamou had already accumulated, the pool of sorghum germplasm now available in the program looks very good. There is now sufficient germplasm base to effect a meaningful selection program.

Breeding Material	Source	No. Entries
F_1 Crosses: P-967083 x Nigerien locals	Purdue	23
F_2 populations: Exotic x Exotic	Texas A&M (F. Miller)	21
F_2 populations: Exotic x Exotic	Texas A&M (D.Rosenow)	12
F_4 progenies: Sudan Sel. x U.S. Lines	Purdue	309
F_4 progenies: P-967083 x SEPON	Purdue	498
F_4 progenies: P-967083 x P-898012	Purdue	91
Miscellaneous Breeding Lines (Selections from Lubbock, Texas, Zimbabwe, and Sudan)	Purdue/Texas A&M	
Experimental Hybrids (Exotic x Local)	Purdue	60
Experimental Hybrids (Exotic x Exotic)	Texas A&M	40
Parental Line for Hybrids	Purdue	120
Drought Tolerance Test	Purdue/Texas A&M	15
Standard Establishment Trial	Purdue	20
Drought Obs. Nursery	Nebraska	17

It is important to note that such a large array of germplasm was <u>not</u> just shipped to Niger indiscriminately. Some of the material was introduced only following a specific request from Clark and Adamou. The rest was based on preliminary evaluation of smaller sets of an array of INTSORMIL nurseries evaluated in Niger during the previous (1983 and 1984) crop seasons. Only those that showed promising adaptation potential were introduced in large numbers to initiate further selection.

Such an approach is cautious and effective. It protects the breeders in national programs from evaluating too many nurseries that do not have immediate utility in their program. It also helps the cooperating INTSORMIL Principal Investigators to get closely involved in developing appropriate germplasm for their collaborators as well as providing a mechanism to assess the adaptation potential of their germplasm within their program. It certainly provides for development of a true spirit of collaboration/a mutually useful cooperation.

b. Hybrid Development

There appears to be good interest developing in evaluating the agronomic potential of sorghum hybrids in Niger. To properly evaluate the potential of hybrids, both local sorghums and introduced germplasm are being considered. A selected group of local sorghums, earlier introduced, was intercrossed with U.S. A-lines during the winter at Cali, Colombia. Intercrosses were also made among U.S. A and R-lines. Approximately 100 experimental hybrids will be evaluated at Kollo (rainfed) and at Tarna (irrigation) to provide some preliminary information on the potential of various germplasm. At the same time some 120 R-lines identified as being superior in Sudan are also introduced to Niger and will also be evaluated both at Kollo and Tarna. Plans were finalized and crossing blocks developed to organize their research material for two graduate students from Purdue scheduled to undertake studies on experimental sorghum hybrids for Niger. One of the graduate students (Tom Tyler, U.S. citizen) is currently in Niger while the other (I. Kapran, a Nigerien) will spend the next crop season in Niger. Their research projects will be supervised, in Niger, by John Clark.

c. Drought Tolerance/Crop Establishment

Two major nurseries on drought/stand establishment will be evaluated in Niger this season. The experiment on

studying some factors associated with stand establishment is on its second year of testing. Twenty local and introduced drought tolerant sorghum selections will be evaluated both under irrigation and rain at Tarna and appropriate data will be collected. The other study involves characterization of sorghum lines previously identified as being drought tolerant in Africa and the U.S.A. Several sets of this nursery will also be evaluated at different environments: four locations in Texas by D.T. Rosenow, one set at West Lafayette by G. Ejeta, and one set in Sudan. Agronomic field notes from all locations will be pooled to be compared with physiological notes collected at Lubbock, Texas. This study is undertaken as a basis for a Ph.D. thesis by E. Monyo, a graduate student from Tanzania. Dr. J. Eastin has also sent an observation nursery of 17 entries for evaluation of drought tolerance in Niger. This nursery is planted on sandy soils at Kollo.

2. Cereal Quality:

Collaborators:

INRAN: Mousa Oumarou, J. Clark, Janet McLoughlin

INTSORMIL: Purdue - J. Axtell, A. Kirleis

Some useful work has been done by the Cereal Quality Lab at INRAN, Niamey in characterizing traditional and improved local sorghum varieties for their Tuwo quality parameters. The lab also has capability for some physical and chemical analysis of sorghum grain, and these tests are done on a routine basis. These activities of the laboratory will be a useful tool as new and improved sorghum varieties from the breeding program become available.

As part of the overall evaluation of the potential of experimental sorghum hybrids, it is proposed that elite hybrids, if identified, be tested for food quality preparations. The two graduate students from Purdue (T. Tyler and I. Kapran) working on sorghum hybrids for Niger have plans to include food quality aspects in their studies. Grain from elite local and exotic hybrids will be collected for Tuwo quality evaluation in Niger. Grain will also be introduced to the U.S. for physical and

chemical characterization in the Cereal Quality Lab at Purdue. Dr. Allen Kirleis has agreed to provide such support and direction to the two graduate students.

3. Sorghum Entomology:

Collaborators:

INRAN S. Maigah

INTSORMIL: Texas A&M - G. Teetes, F. Gilstrap

Following his visit to Niger and Mali last fall, George Teetes proposed a series of entomological experiments on the head bug complex in the region. His proposed research on head bugs along with studies on stem borers as suggested by INRAN have been approved both by INRAN and INTSORMIL. Studies include species identification, damage assessment and biology of these two major insect pests. Dr. S. Maigah, INRAN entomologist, is enthusiastic and supportive of these collaborative activities. Plans are underway for a graduate student and a research associate from Texas A&M to spend several months in Niger executing these experiments in collaboration with Dr. Maigah during the 1985 crop season.

4. Striga:

Collaborators:

INRAN: H. Hassan, D. Laycock, J. Clark

INTSORMIL: Purdue - G. Ejeta, L. Butler

Arrangements are being made for a graduate student from Purdue, Dale Hess, to be stationed at INRAN as a research associate undertaking studies on various aspects of Striga. Mr. Hess is currently working on characterizing known Striga resistant sorghum varieties for biochemical and morphological attributes. He has also made intercrosses of these lines at Purdue. While in Niger he will be conducting studies on determination of inheritance as well as some basic and applied studies that would contribute towards better understanding of the mechanisms of Striga resistance in sorghum. Arrangements were made with H. Hassan and D. Laycock for collection of large quantities of Striga

seed this fall in Niger to be used for Hess' study and to develop *Striga*-sick plots.

It is hoped that specific plans will soon be finalized and that Dale Hess will be in Niger beginning the next crop season in June 1986.

B. Research Progress and Results

Germplasm Enhancement - INTSORMIL has contributed significantly to the availability of sorghum germplasm in Niger. Many well adapted lines have been obtained primarily from the Texas A&M and Purdue programs.

Survey of Head bugs in Niger - Drs. Gary Steck and George Teetes surveyed headbugs in Niger in 1985. A regular schedule of sampling was undertaken in three major sorghum production areas (Maradi, Konni and Gaya) and at the Kollo Station. Taxonomic collections were made of all species of headbugs encountered. These will be used to verify identifications and establish a complete reference collection. Sampling also yielded detailed information on species composition, distribution, relative abundances and seasonal phenology.

Drought Tolerance - Several lines selected by Gebisa in Sudan have proved to also be drought tolerant in Niger and will be useful germplasm sources for the INRAN breeding program.

Hybrid Sorghum - Hageen Dura-1 (sorghum hybrid from Sudan) seems to be well adapted after one year, one location trials in 1985. There is strong interest in this and other hybrids in Niger for utilization on irrigated farms. Several additional hybrids are being tested at three locations in Niger during the off season and will be evaluated with Hageen Dura-1 in 1986.

C. Mutuality of Research Benefits

Drought tolerant lines identified in Sudan and Niger are now an integral part of the U.S. sorghum breeding programs at Texas A&M and Purdue. These were sources of drought tolerance which were previously unknown in the U.S.

Information gained on local processing of sorghum flour in Niger and Sudan are providing useful insights into the problem of lower digestibility of sorghum grain in U.S. feedlots.

Institution Building

Research Supplies:

Laboratory supplies from INTSORMIL have been provided to the INRAN Cereal Quality Lab at Kollo.

Research Journals - Several boxes of scientific journals have been sent to the INRAN Library at Niamey.

Vehicles - Two motorcycles have been purchased for transportation for INTSORMIL and INRAN scientists.

Training of Host Country Researchers

Mousa Oumarou spent several months at Purdue, Kansas State and Texas A&M University cereal quality labs. He is currently in charge of the INRAN Cereal Quality Lab in Kollo.

Two M.S. students from Purdue (Issoufou Kapran and Sharif Ari) will be conducting M.S. thesis research in Niger during 1986.

Host Country and U.S. Visits by Scientists

Visits by Niger Scientists to the U.S.:

Mousa Oumarou - Cereal Quality Lab

S. Maigah - Attended INTSORMIL/ICRISAT Entomology Conference at Texas A&M University.

Mamadou Ouattara - INRAN Soils Lab

Visits by U.S. Scientists to Niger:

John Axtell	Purdue/Sorghum Breeding
Gebisa Ejeta	Purdue/Sorghum Breeding
Tom Tyler	Purdue/Sorghum Breeding
Allen Kirleis	Purdue/Cereal Quality
John Yohe	Nebraska/Management Entity
David Andrews	Nebraska/Millet Breeding
Darrell Rosenow	Texas A&M/Sorghum Breeding
George Teetes	Texas A&M/Entomology
Gary Steck	Texas A&M/Entomology
Osman Youm	Texas A&M/Entomology

Student Training

Tom Tyler - U.S., Male, M.S. Sorghum breeding with thesis research entirely in Niger.

Networking

In-Country - The major activity for disseminating research results within Niger has been the INTSORMIL/INRAN/NCRP Sorghum and Millet Workshop, which was planned during Year 6 and implemented during Year 7. The Workshop was very successful for the 45-50 participants who presented papers and took part in discussions. Additional research information exchange took place through INTSORMIL scientist visits to Niger.

Regional - For the past two years key INRAN sorghum and millet researchers have participated in exchange visits with neighboring countries. In Year 5 INTSORMIL/INRAN scientists visited Burkina Faso to see the Purdue Farming Systems Research and the ICRISAT West African Research Program in Ouagadougou. In Year 6 a similar exchange visit was made with the ICRISAT/Mali/USAID Program in Bamako.

General Comments

The INTSORMIL/CRSP Program in Niger is developing nicely. Continual dialogue between INTSORMIL and INRAN scientists must continue over several years in the designated research areas. Joint research planning and joint nursery visits in both the host country and U.S. are essential. French language capability among INTSORMIL principal investigators must be improved. The joint workshop planned in Year 6 and implemented in Year 7 was extremely successful in lending a positive note to our collaborative research program in Niger. The excellent support of the USAID Mission, including participation by the Ag Development Officer, Mission Director, and Ambassador Bogosian was very important to the success of the Workshop.

Paraguay

Fred Miller

Texas A&M University

Collaborative Program

Institutions Involved

Ministry of Agriculture, Asuncion, Hon. H. Bertoni

Ing. Luiz Alvarez

Ms. Mercedes Alvarez, M.S.

Colonia Menno - (Menonites-Central Chaco)

Ing. Jacob Fehr

Ing. Willy Giesbrecht

Instituto Interamericano de Cooperacion Para la Agricultura

Ing. Augusto Donoso Echegoyen

Emporio S.A. Seed Co.

Ing. Pedro Kirchhofer

USAID Mission, Hon. Arthur Davis, Ambassador

Mr. Paul Fritz

Mr. Oscar Carvallo

A Memorandum of Agreement has been written and circulated to the INTSORMIL program office for concurrence. The MOA is in Paraguay undergoing review at present and signing is anticipated within the first months of Year 7.

Historically, it is important to recall the reasons for involvement in Paraguay. A group of interested Paraguayan students came to F. Miller to discuss the possibility of establishing a contact through INTSORMIL with agriculturists in Paraguay to explore the potential of sorghum in food and feed production. Contacts were made with the Ministry of Agriculture and the USAID Mission. Shortly afterwards a request was received from USAID/Paraguay to provide technical assistance in sorghum. In October 1984, F. Miller traveled to Paraguay, met with USA and Paraguayan officials and set up a good dialogue. Several preliminary trials were provided to measure the potential of sorghum in the major production areas. The trials were established and a good set of data was collected.

Constraints, Objectives and Research Results

Paraguay is classified as an advanced developing country similar to Brazil and Mexico. However, a strong infrastructure does not exist to the

same extent as in some ADC's. There is strong interest in the developmental expansion of sorghum as both human food and livestock feed. Sorghum is considered to be useful in expanding the available wheat supply as a blend. It is also considered useful in livestock grazing, hay, and finishing rations. Both poultry and swine are major enterprises in the grain deficient economy of Paraguay. Cotton has been the main stay of the agricultural economy and now there is concern over the boll weevil moving into the country. Sorghum would offer many choices to the rural economy, not the least of which would be an IPM (Integrated Pest Management) tool for the cotton industry.

Objectives:

The goal of the Paraguay program is to develop the production of sorghum in Paraguay to a level of adequacy for human food, animal grazing and dry season survival, and as a response to expand production of poultry, swine and finished livestock through private enterprise.

In order to reach the goal of the sorghum project there must be a strong interaction between public and private sectors. The role and relationships will change as the program matures. At the beginning (we are already involved) there will be stronger need for public leadership. The private sector has made statements of interest and support. These will be utilized and strengthened to gain wide involvement in the total activities. Specific objectives are to:

1. Identify and characterize the potential role of sorghum in Paraguay. This has been done and suggests that strong potentials exist for usage at multi-levels of government and private enterprise.

2. Strengthen the national research agencies (Ministry of Agriculture) capabilities in sorghum research through collaborative research sponsorship with the CRSP-INTSORMIL (contacts and initial activities underway).

3. Develop the involvement of private producers (Association de Rural, Menonites - Filadelfia and Loma Plata, poultry and swine producers, private farmers, etc.) for production and utilization of sorghum.

4. Assist the development of a national seed program for the production and control of foundation seed stocks; assist in the development of a strong hybrid seed industry to produce and distribute quality planting seeds (F_1 hybrid seed) in Paraguay; and assist in the identification of

adequate marketing standards, classes and certification procedures for the national sorghum seed industry.

5. Provide leadership in organizing private producers of sorghum and those who utilize sorghum. The association of all involved in sorghum in Paraguay would have a self strengthening influence on the development of the commodity within the whole economic unit (Country of Paraguay).

Technical Assistance:

The assistance will enable the Ministry of Agriculture of Paraguay (MAG) to develop a public and private interaction sorghum industry within the country. This will be accomplished by identifying the constraints to development of an industry and the push to solve the constraints and thereby moving the whole industry development toward a common goal. International sorghum expertise is available from INTSORMIL (USAID/Sorghum/Millet CRSP) and private industry within Texas. There are other needs and interests in sorghum in Paraguay.

Intermediate and long term activities will result from stimulation of the interest in sorghum in Paraguay. Using international expertise in the areas of germplasm, production and evaluation of performance trials, identification and subsequent increase of parental stocks, production of grain and forage hybrids for marketing by private enterprise and development of marketing standards will facilitate rapid acceptance of technology.

Preliminary activities have identified the interest in sorghum. Experimental hybrids have been evaluated and found to be very well adapted and productive. Basic off-the-shelf inbred parental stocks have been tested in limited locations for characteristics necessary for hybrid seed production. One preliminary experimental production of hybrid seed has been attempted. With these results and experiences it is easily within sight that private enterprise can be encouraged to take the hybrid seed industry to a reality in Paraguay. The economic potentials are significant to the agricultural sector and to the export market since quality hybrid seed is a highly desirable product.

Research Results:

Both experimental hybrid and disease/insect resistance trials were planted at IAN Caacupe. The conditions of growth had been limited by lack of rainfall but yields were very good on the hybrids. Data were collected

following a brief workshop on techniques. Hybrids of tropically adapted parentage appeared best suited to the area. Those same hybrids which demonstrate drought tolerance in Texas were best in Paraguay. The TE materials were much too early and lacked yield potential. Among the best hybrids were:

ATx628 x RTx434	ATx630 x RTx435	ATx629 x RTx433
ATx378 x RTx430	ATx631 x RTx435	ATx623 x SC0599-11-E
ATx623 x Hegari (Forage)	ATx623 x Greenleaf (Forage)	

Yields were generally 3500 to 5000 kg/ha for the best materials. Maize at a comparable situation was said to produce 700 to 1000 kg/ha. In another trial using "Dorado" which was grown by Instituto Interamericana de Cooperacion Para la Agricultura the sorghum yield was 3800 kg/ha while the local maize yield was 900 kg/ha.

Rust was the only disease problem present. Some greenbug damage occurred as did sugarcane stalk borer damage.

In the Disease nursery the best lines were RTAM428, RTx435, 82C447, 81EON85, RTx432, BTx625, R6956, B8201 and BTx626. Several items from the Chillicothe program looked very good.

Other sites will be discussed briefly to show results. At Filadelfia in the Chaco of Northern Paraguay, the Menonites had planted a production block of approximately eight acres of ATx623 and Greenleaf sudangrass. The niche had worked and excellent seed production had resulted. The Menonites were outstandingly happy with their success. No disease or major insect problems were evident. A good set of basic flowering data was obtained from the male/female line trial in anticipation of future hybrid seed production. In the hybrid trial those same experimental trial hybrids that look good at College Station, Texas, were best in the Filadelfia nursery. Much can be learned from the local farmers on how to grow, evaluate and recognize characteristics of the sorghums. Training appears to be an important part of the Mission program in Paraguay.

The INTSORMIL program, even in the absence of a MOA, was able to establish an excellent initial effort in Paraguay. We anticipate much greater involvement as the relationship is developed. This program will allow the opportunity to expand the potential of evaluation of adapted USA materials, to test for wider ranges of adaptation and even more rapid identification of superior genotypes.

Institution Building

Because of the initial involvement in Paraguay we have only begun to develop the full range of training. No funds have yet been committed. No host country researchers have been trained on the INTSORMIL project, even though Ms. Mercedes Alvarez was trained at Texas A&M University. Dr. Fred Miller was the only INTSORMIL scientist to visit with host country researchers. More than 300 publications of the TAMU system were sent to collaborators in Paraguay in 1984-85. (Travel to Paraguay 9/29/84 to 10/4/84 and 2/11/85 to 2/19/85.)

Networking

Because we are involved with four different groups in Paraguay we have several levels and interests to work with in affecting sorghum. Success was obtained in this reporting period with all parties. In fact, the success has already been transmitted outside the group. Requests have been received at the USAID Mission to add work with other colonies in the country and with other livestock producers.

Success in Paraguay will spill over into Uraguay, possibly Brazil and Argentina. Each of these areas already produces sorghum but not in the most desirable manner nor of the correct type.

Student and trainee evaluation and selection will begin in the next period as the program is more established.

General Comments

The USAID Mission has expressed interest in expanding into the sorghum area to develop a stronger small enterprise backup. USAID has indicated a willingness to strengthen the INTSORMIL involvement in sorghum by a "buy-in" to INTSORMIL. The particular objectives of the program are not firm yet but student training and short term training in USA is a strong part of the program. This will lead to a stronger long term involvement.

In 1985/86 we anticipate completion of the MOA. Paraguay is very much interested in sorghum development in the country at all levels. The progressive individuals there will be able to help us relate findings in commodity development to similar situations in South America. We are off to a good and very positive start in a country with much to gain and in a country with a very interested and progressive USAID Mission.

Philippines

Jerry W. Maranville
University of Nebraska

Collaborative Program

Institutions Involved

Philippines:

Philippine Council for Agricultural Research and Resources Development (PCARRD)

University of the Philippines at Los Banos (UPLB)

Institute of Plant Breeding (IPB)

Southern Mindanao Agricultural Research Center (SMARC)

Bureau of Plant Industry (BPI)

U.S.:

University of Nebraska

Texas A&M University

Purdue University

Memorandum of Agreement: A formal memorandum of agreement was established between PCARRD and INTSORMIL in March, 1981 which outlined the responsibilities of each organization in establishing the working arrangements necessary for research collaboration in the Philippines. Collaborative research has been ongoing since July, 1982, when INTSORMIL supported one senior scientist to do research and provide technical assistance to scientists at IPB. A sorghum development workshop was held June 14-15, 1984 to establish policy for the national sorghum program. Project NU-21 is closely linked to the economics project NU-17 headed by Dr. Dale Anderson. A major part of the collaboration is shifting of the major sorghum producing area in Mindanao (most southern island).

Other: There appear to be no major obstacles in getting collaborative research accomplished. A primary constraint to getting research done in Year 6 was making funds available to the researchers in a reasonable amount of time. The country is not well off economically and depended a lot on INTSORMIL funds for sorghum research. Logistics of getting funds from the U.S. to the Philippines and distributed always appeared to be slow.

There is considerable opportunity for collaboration in several areas. The current effort in production research is providing necessary data for the economics research to be conducted in Project NU-17.

Sorghum/Millet Constraints Researched

Production: Sorghum can either be produced in the Philippines as sole crop or as a rotation in the rice-based cropping system. In areas such as Mindanao where sole cropping is practiced, the environment is not always consistent enough, particularly with regard to moisture, to insure a consistent yield. A need also exists to maximize the use of an often limited supply of fertilizer. Research is ongoing in varietal improvement and production practices with the objective of yield stability and an increase in yield level.

Virtually no information is available on sorghum production in lowland paddies following rice. Research collaboration is ongoing in production technology for this system. Varietal improvement of sorghum is also a major objective for paddy soils. Coupled with this is a major thrust into the physiology of sorghum grown in these difficult soils.

Research Results: Cooperation on rice based systems has been with Dr. D.A. del Rosario at the Institute of Plant Breeding, UPLB. Many of these studies are a continuation of those initiated by Dr. Jerry Maranville during a sabbatic leave in 1982/83. Several entries of sorghum were evaluated under greenhouse conditions and ranked for performance under flooded, drought, or high acid (aluminum) conditions. Other experiments tested planting time and depth of seeding for sorghum following rice. It was determined that 5-10 days after harvesting rice was the best time to sow sorghum. It was also shown that for best germination, a depth of 3 to 5 cm was most desirable.

Field tests were conducted by Dr. Rosario from IPB regarding sorghum adaptability to post-rice conditions at three locations. In these tests, earlier maturing sorghums were shown to be most desirable although yields of the best types were very low. More research on varietal improvement and culture is necessary to boost yields in these difficult conditions.

On-farm trials were conducted in Mindanao by Dr. Lydia Oliva in conjunction with the economics project headed by Dr. Dale Anderson. These trials were designed to construct production packages for farmers growing sole crop sorghum, and at the same time provide production economics and

marketing data for economic studies. Fertilizer rates, insecticides, herbicides, and varieties were among the variables tested. Preliminary surveys were included to document current production practices and the influence of social customs on them.

It was found that pests such as whorl maggots, corn borers and headworm can be potentially damaging. Insecticides showed varied degrees of success in their control. Fertilizers increased yields in most trials. Economic analysis showed, however, that the rates producing the highest yields were not always the most economical. The trials also pointed out that use of current hybrid sorghums could not always be economically justified. However, use of new hybrids with substantially higher potential yield than current varieties could change that analysis.

Mutuality of Benefits: The research has mutually benefited both Philippine and U.S. Institutions via germplasm exchange. Both Texas A&M and the University of Nebraska have actively furnished germplasm for testing in the Philippines. Some of the Texas material has looked very encouraging. A number of experimental lines from the IPB program have been entered into the conversion program at Texas and appear to have unique physiological and perhaps nutritional characteristics.

Institution Building

INTSORMIL provided $12,000 in direct support for cooperative research in the Philippines. This was used primarily to purchase supplies, labor, and some honorariums for persons working directly on projects.

Funds have been provided for two publications, and these are recently off the press. One relates to a sorghum workshop, and the other to a complete treatment of all phases of sorghum and its culture in the Philippines.

One student has completed a degree and now works for Mississippi State University on INTSORMIL objectives at CIAT. Other students have not finished their studies in the U.S. and returned to the Philippines.

Dr. Dely Gapasian, Head of the Department of Crops, PCARRD has been the most recent visitor to the U.S. regarding the Philippines Project NU-21

Networking

Much of the work is done "on-farm" so farmers are immediately aware of research results. Work at the other institutions is disseminated via

extension similar to the U.S. manner of information dissemination. Annual reports are furnished by Philippine scientists to Dr. Jerry Maranville concerning any work supported by INTSORMIL.

General Comments

Perhaps the major concern in the Philippines is some way to maintain continuity in sorghum research with limited resources. INTSORMIL funds, as small as they have been, have maintained some of this continuity, and the INTSORMIL interest in their program has attracted more attention at the national level to the crop. There is momentum going for sorghum research now, but many problems exist in marketing.

Another concern is that the students being trained in the U.S. will not return to the Philippines, but seek jobs elsewhere. There is no mechanism currently to insure their return.

Currently, the Philippines is the only active country participating in the Asian Subcontinent ecogeographic zone. India is the prime site host country, but no collaborative research or memorandums of agreement have been signed.

Senegal

David J. Andrews
University of Nebraska

Collaborative Program

Institutions Involved

Centre for National Agricultural Research (CNRA-ISRA), Bambey, Senegal

Kansas State University, Hays, Kansas

University of Nebraska, Lincoln, Nebraska

Verbal agreement to develop collaborative research made between Head, Crops Research, Bambey; and Director INTSORMIL.

Germplasm exchange commenced, grain quality program will be implemented 1985/86.

Sorghum/Millet Constraints

Pearl millet is the principal cereal in Senegal (0.6-0.7 m ha) with sorghum (0.2 m ha), rice and maize. Collaboration will focus mainly on pearl millet since this is the crop most affected by the continuous Sahel drought situation. Constraints to pearl millet production are drought, disease (principally downy mildew), insects (head worm and stem borer), low soil fertility and low yield potential. Vis-a-vis wheat and rice consumption, pearl millet (and sorghum) face a serious utilization constraint because prepared products (e.g., flour and cous cous from which a cooked food can quickly and easily be made) are not available. These must be produced commercially if these traditional dryland cereals are to stay competitive (problem exists in many other countries).

Higher yielding varieties than Souna III (the old standard) have recently been released by CNRA-ISRA. However, these are not early maturing and are still quite tall. For the northern areas of the country (above Bambey) where drought has affected the millet crop worst, and where there are few alternatives (none are cereals) earlier dwarf varieties and even hybrids should be tested. Pest and disease levels are lower there and U.S. germplasm may succeed directly. Drought resistant material will of course be preferable. Sorghum and pearl millet germplasm have been sent from UNL and KSU (Hays) for 1985 testing.

Pearl millet is being explored as a potential combine crop in some hot dry areas of the U.S. African material contains traits potentially useful for this purpose — (for instance, wild pearl millet in Senegal is a known source of rust resistance). Verification of drought screening methodology would be sought in Senegal. Grain quality research should give information relevant to possible consumption for feed in the U.S.

Institution Building

Collaboration has recently been implemented in Senegal. Since Senegal has relatively good funding from the World Bank and French Aid, little expenditure is envisaged on research support.

Amadou Fofana who obtained his MSc in millet breeding at the University of Nebraska returned to Senegal in January 1985 and will be millet breeder at Kaolack.

Dr. Mbaye Ndoye, Head, Crops Research, CNRA Bambey visited the INTSORMIL Management Entity at the University of Nebraska in February to discuss potential collaboration. Mr. David Andrews visited with CNRA Scientists and met with AID/Senegal.

Networking

ISRA has good relations with crop extension agencies in various parts of Senegal. It is a member of CILSS and SAFGRAD research organizations through which material and information are channeled to other countries.

General Comments

INTSORMIL scientists should collaborate on field experiments in Senegal and participate in food product research.

Research in Senegal will be relevant to other dry sub-saharan areas in West Africa with equivalent rainfall patterns.

SUDAN

Allen W. Kirleis
Purdue University

Collaborative Program

Institutions Involved

Host Country

Agriculture Research Corporation (ARC)

Gezira Research Station

El Obeid Research Station

Kadugli Research Station

Food Research Centre, Shambat

Sudan National Seed Administration

Regional Ministry of Agriculture and Natural Resources, Kordofan Region

ICRISAT/Sudan

Western Sudan Agriculture Research Project (WSARP)

University of Khartoum/Faculty of Agriculture

USAID Mission/Khartoum

U.S.

Kansas State University

Purdue University

Texas A&M University

University of Kentucky

University of Nebraska

Memorandum of Agreement

1. Agriculture Research Corporation, the Democratic Republic of Sudan (ARC) and INTSORMIL.

a. Cooperative Breeding and Genetic Evaluation of Sorghum

Scientists: Abdel Latif M. Nour/Osman Elobeid Ibrahim (ARC)
Rosenow/Ejeta (INTSORMIL)

b. Physiological and Agronomical Research on Sorghum

Scientists: Saeed M. Farah (ARC).
Eastin (INTSORMIL)

c. Sorghum Diseases/Plant Pathology Research

Scientists: El Hilu Omer (ARC)
Frederiksen/Warren (INTSORMIL)

d. Striga/Weed Control in Sorghum.

Scientists: A.M. Hamdoum/A.G.T. Babikar (ARC)
Ejeta (INTSORMIL)

e. Evaluation of Sorghum and Millet food Products

Scientists: S.M. Badi (ARC)
Kirleis (INTSORMIL)

f. Library Improvement

g. Plant Pathology Student Training

Scientists: Mohamed El Fatih K. Ali (ARC Student)
Warren (INTSORMIL, Major Professor)

h. Vehicle for Collaborative Sorghum/Millet Research

2. Western Sudan Agriculture Research project (WSARP) and INTSORMIL.

a. INTSORMIL Agronomic Work in El Obeid Area. INTSORMIL Agronomist Tareke Berhe.

b. INTSORMIL Research of Social and Communication Networks for Agricultural Information. INTSORMIL Investigators C. Milton Coughenour and Saadi Nazhat.

Development of a Five-Year Research Plan for Sudan

At the request of the USAID Mission Khartoum and the Agricultural Research Corporation (ARC), INTSORMIL scientists (Ejeta, Kirleis, and Rosenow) were asked to assist in developing a five-year plan for sorghum and millet research in Sudan. The USAID Mission is hopeful that the five-year research plan will foster additional cooperative sorghum/millet work between ARC and INTSORMIL scientists and strengthen ARC's sorghum/millet research capability. The Mission has tentatively agreed to support this joint research activity with local currency funds generated from the sale of PL-480 grain shipped to Sudan as well as hard currency from the Mission.

Sorghum/Millet Constraints Researched

Production and utilization constraints

Moisture stress is the most important constraint to sorghum/millet production in Sudan. Methodologies for screening sorghum germplasm for drought tolerance are also lacking. Breeding efforts to incorporate drought tolerance with higher than average yield potential are limited by lack of a

rapid field screening procedure as well as lack of knowledge of sources of sorghum germplasm possessing useful traits.

Other factors that reduce sorghum/millet yields in Sudan include insect pests, diseases, and Striga. Insect pests that are known to attack sorghum especially in the rainfed areas of Sudan include stem borers, American bollworm, and central shootfly. The major fungal diseases on sorghum/millet in Sudan include anthracnose, charcoal rot, long smut, and grain mold. Striga, a parasitic weed of sorghum in Sudan, constitutes a major constraint to sorghum production. There is very little sorghum germplasm with resistance to Striga and the mechanism that renders resistance to Striga is unknown. Knowledge of inheritance of this trait is also lacking.

One of the major factors limiting the utilization of sorghum and millet in Sudan is the fact that the high yielding varieties lack acceptable food quality to the consumer. Work is needed to develop a better definition of sorghum and millet food quality so that a rapid test can be developed for screening breeders' lines.

Research Progress

Hybrid Seed Industry Development

INTSORMIL has had a continual involvement in the efforts of the Government of Sudan in expanding research on sorghum hybrids as well as in promoting a wide use of hybrid sorghum varieties by farmers.

INTSORMIL sorghum breeders have been directly involved in devising breeding strategies with ARC scientists, in providing essential germplasm, and is assisting in the evaluation of sorghum breeding nurseries. INTSORMIL has also collaborated with the Sudan National Seed Administration and has provided essential technical assistance in the hybrid seed production efforts. Technical assistance provided through INTSORMIL and shipment of several tons of seed of parental lines of HD-1 purchased with INTSORMIL funds facilitated the hybrid seed production activity. INTSORMIL PI's and ME staff working closely with the USAID mission in Khartoum and the Government of Sudan provided the necessary momentum towards the establishment of an infant seed industry in Sudan.

Ugandi Pearl Millet for Western Sudan

Pearl millet, Pennisetum americanum (L.) Leeke, is a staple food grain in N. Kordofan, Western Sudan. Between 1975 and 1980, about 135,000 metric

tons of millet grain were produced in N. Kordofan each year. This amounted to 35% of the total millet production in Sudan.

Millet yields have been declining sharply, from 640 Kg/Ha in the 1960's to 377 Kg/Ha in the 1970's and to a low of 210 Kg/Ha in the early 1980's. This sharp decline in yields was parallel to the decline in rainfall. Before 1970, the annual precipitation in the area was close to 400 mm. It fell to below 350 mm between 1970 and 1978 and to below 300 mm for the 1978-1984 period.

Other environmental changes that have contributed to the decline in production are: increase in evapotranspiration, decrease in relative humidity, and increase in mean daily temperatures. During this period, pest problems have also increased tremendously.

Because of these environmental factors and changes, it was found necessary to breed, select, and test early-maturing drought-tolerant, and pest-resistant genotypes of pearl millet. A number of Serere composites and Serere lines of pearl millet were introduced from Uganda by the International Crops Research Institute for the Semi-Arid Tropics (ICRISAT) in 1973. These materials were evaluated and used in composite breeding, variety top-cross hybrid development, and intervariety crosses. Most of the Serere research material was early maturing, bristled, tolerant to smut, and possessed good quality grain.

Serere Composite 2 (SC_2) was selected and found high yielding in ICRISAT, Hyderabad, India and introduced to Sudan in 1977 by R.P. Jain with the inception of the ICRISAT/SUDAN Cooperative Program for pearl millet and sorghum improvement.

SC_2 was tested along with other introduced genotypes and local varieties in national trials from 1977 to 1979. On the basis of these results and subsequent independent consumer acceptability tests conducted by the director of Agricultural Services of Darfur Province and other cooperators in Kordofan, SC_2 was officially released for general cultivation in January 1981 by the National Seed Administration under the name Ugandi.

Tareke Berhe, an INTSORMIL agronomist working in El Obeid, initiated testing of Ugandi on farmers' fields and found it to be higher yielding than local varieties (Table 1). Ugandi is a bristled, composite variety of pearl millet showing good promise in its adaptability to the very marginal crop environment of Western Sudan. It is early maturing (70-80 days) and drought

tolerant. Its bristled heads have proven resistant to birds, grasshoppers, and according to farmers' claims, also mice. In the very dry 1984 crop season (about 150 mm effective rainfall) the late-maturing local varieties generally failed to produce heads with seeds. Any seeds produced were eaten by birds. On the other hand, Ugandi produced a decent crop in several villages and its bristled heads prevented bird damage. In comparison to the local variety, Baladi, which in almost all cases did not pass the boot stage and produced no seed, Ugandi produced measurable yields in several villages (Table 2). Yields were actually higher than those reported, but in the absence of any other crop, the farmers had started eating Ugandi seed at the milk-dough stage.

USAID/Sudan contracted with TENNECO Seed Co. to increase seed of Ugandi in Northern Sudan. This seed will be distributed to small farms in North Kordofan during the 1986 crop season.

Table 1. Comparison of Grain Yield and Agronomic Data for Five Millet Varieties Grown at Kaba Experiment Station in 1983.

TREATMENT[1]	PLANT HEIGHT (cm)	NO. OF HEADS PER 20 m^2	SEED WEIGHT gms/head	YIELDS[3] Kg/Ha
Ugandi (+)	147	70	12.09	1228 a
Ugandi (0)	157	68	10.91	1090 c
Baladi (+)	204	78	12.20	1192 b
Baladi (0)	211	49	12.40	855 e
Eish Bornu (+)	205	55	11.58	829 f
Eish Bornu (0)	204	65	11.96	998 d
ICMS 7817 (+)	154	83	9.37	997 d
ICMS 7817 (0)	151	77	7.94	847 e
Hirehree (+)	195	55	12.93	984 d
Hirehree (0)	207	50	11.61	771 g

[1] (+) = with fertilizer; (0) = no fertilizer.

[2] LSD 0.05 = 22.92; C.V. = 13.59%

to find yield/Feddan multiply Kg/Ha by 0.42

[3] Duncan's multiple range test for yield.

Values with the same letter are not significantly different at 0.05 probability level.

TABLE 2. Yield of Ugandi Millet in 1984, INTSORMIL on-farm Trials around El Obeid.

VILLAGE	YIELD	
	Kg/Fed	Kg/Ha
Goz Al-Arif	71.4	170.0
El-Kharta	70.6	168.0
Abu-Haraz	12.6	30.0
Mean	51.5	123.0
Baladi (control)	0.0	0.0

* Unpublished millet yield estimates for N. Kordofan during 1984 are about 17 Kg/Fed. = 40 Kg/Ha.

Mutual research benefits to Sudan and U.S.

An effective mechanism has been developed for germplasm exchange with cooperators in Sudan. The type and extent of germplasm introductions to Sudan from INTSORMIL is decided by either specific requests from the Sudanese collaborators or based on preliminary evaluation of small sets of nurseries introduced the previous season. Such an approach has been found to be satisfactory and workable and has resulted in the introduction of improved high yielding breeding lines to Sudan. The germplasm introduced in Sudan by INTSORMIL today constitutes a significant part of the core breeding material used in the ARC sorghum breeding program. Likewise, useful local sorghums from Sudan having unique characteristics have been introduced for use in U.S. breeding programs.

Cooperative ARC/INTSORMIL crop physiology and breeding work on drought tolerance of sorghum has led to a better understanding of crop adaptation to stress. Through the work of pooled evaluations of sorghum identified as drought tolerant both in U.S. and Sudan, range of adaptation of various sorghum types is better defined.

Work on the food quality of sorghum by ARC/INTSORMIL has shown that a fermentation process, commonly used to prepare most Sudanese sorghum foods, improves the protein digestibility of cooked sorghum products. This work has led to a better understanding of the factors that influence sorghum protein digestibility and work is now in progress to apply this new knowledge to improve the digestibility of sorghum when used as an animal feed in the U.S.

Institution Building

Research equipment provided to support physiological and agronomic research on sorghum:

Equipment	Cost
Infrared thermometer	$ 3,050
Leaf area meter	4,780
Energy sensing meter	1,342
Leaf porometer	1,575
Pressure vessel for leaf water potential measurements	700
Three-wheel vehicle for plot research transportation	3,000

Reference books provided to support research on sorghum/millet:

AACC Approved Methods of Analysis, 8th Edition, Volume I & II.

International Symposium on Sorghum Grain Quality, L.W. Rooney and D.S. Murty, editors, 1982.

Sorghum in The Eighties, L.R. House, L.K. Mughogho and J.M. Peacock, editors, 1982.

Sorghum Root and Stalk Rots: A Critical Review, L.K. Mughogho, editor, 1984.

Sorghum Insect Identification Handbook Information, G.L. Teetes, K.V. Seshu Reddy, K. Leuschmer and L.R. House, editors, 1983 (4 copies)

Research funds provided to Agricultural Research Corporation:

Project	Funds
Breeding and genetic evaluation of sorghum	$ 5,000
Physiology and Agronomical research on sorghum	5,000
Sorghum diseases/plant pathology research	4,000
Striga/weed control in sorghum	5,000
INTSORMIL agronomist at El Obeid, including salary	110,000

INTSORMIL trained Sudanese researcher who has returned to the Sudan.

Osman Elobeid Ibrahim received a Ph.D. degree in plant breeding under the direction of John Axtell (Purdue University) in May, 1984. He returned to the Sudan in July 1984 and has been working at the Gezira Research Station, ARC, as a sorghum breeder since that time. Ibrahim's breeding efforts are concentrated on breeding for drought tolerance, insect

resistance, and improved grain yield and food quality. During the 1985 crop season Ibrahim is cooperating with several INTSORMIL scientists (Ejeta, Kirleis, and Rosenow).

INTSORMIL Scientist travel to Sudan

- August 19-25, 1984. Jerry Eastin. Trained S.M. Farah on the use of the physiology research equipment in Wad Medani.

- October 22 - November 12, 1984. Gebisa Ejeta. Host INTSORMIL External Review Panel in Sudan. Provide technical assistance with the Sudan Sorghum Hybrid Seed Production program. Evaluate INTSORMIL/Sudan cooperative sorghum nurseries in Wad Medani and El-Obeid.

- October 31 - November 12, 1984. Allen Kirleis. Host INTSORMIL External Review Panel in Sudan. Evaluated INTSORMIL/ARC sorghum food quality data at the Food Research Centre in North Khartoum.

- November 2-12, 1984. D. Rosenow. Host INTSORMIL External Review Panel in Sudan. Evaluated INTSORMIL/Sudan cooperative sorghum nurseries in Wad Medani and El Obeid.

- June 6 - December 7, 1984. C. Milton Coughenour and Saadi Nazhat. Conducted field research around El Obeid on the social and communication networks used to distribute agricultural information.

- July 1, 1984 - June 30, 1985. Tareke Berhe. Conducted agronomic research on sorghum/millet around El Obeid.

Networking

A significant networking activity involving information exchange is developing through efforts of the INTSORMIL project and its collaborators in Sudan and other parts of Africa. Using information accumulated on germplasm and environmental data from INTSORMIL collaborative efforts in Sudan, varieties and hybrids that show potential in Sudan are suggested for testing in similar environments in Africa. Research methodologies (on drought tolerance for example) as well as new findings are also shared across countries and zones.

Farming systems research efforts used by WSARP in the El Obeid area were largely based on baseline data provided by the INTSORMIL socioeconomic

research team. In addition, the INTSORMIL agronomist Tareke Berhe stationed in El Obeid initiated an active on farm research program and provided the necessary leadership to similar efforts by the WSARP farming systems research team.

General Comments

Recommendations for improving sorghum/millet collaborative research

To help facilitate better program coordination, between ARC and INTSORMIL the following is recommended.

1. ARC needs to designate an INTSORMIL project leader. It would be useful if the INTSORMIL project leader and the Sudan national coordinator for sorghum and millet research were the same person.

2. An annual research review and planning session between ARC and INTSORMIL is suggested. It is hoped that this will create a proper forum for sorghum and millet research scientists in Sudan to address key issues, review research results and plan new ones on a yearly basis.

3. Efficient ARC/INTSORMIL program coordination requires a good communication system. As all telex messages must now go through the USAID Mission in Khartoum, it is suggested that a modest investment be made to install a telex service at Wad Medani, and perhaps radio communication connecting other major ARC stations.

Sudan's relation to ecogeographic zone

Grain sorghum and pearl millet are the most important cereal crops in the Sudan. Sorghum makes up about 80% of the total. These crops are grown under both rainfed and irrigated conditions. Sudan is a vast country having a diversity of ecological zones with varying climates. Accordingly, the breeding, physiology, and agronomic work done in Sudan is relevant to the entire Eastern African Zone.

Most sorghum foods consumed by the Sudanese are made from a fermented batter. As many other countries in the region consume fermented type foods, the food quality work done on local Sudanese sorghum food can be useful to other countries in the region.

Tanzania

Fred Miller
Texas A&M University

Collaborative Program

Institutions Involved

Tanzania - TARO (Tanzanian Agricultural Research Organization)
U.S. - Texas A&M University

Memorandum of Agreement

A Memorandum of Agreement between TARO and INTSORMIL was signed in September of 1982, and remains in force to date. The nature of the cooperation and collaboration was outlined as follows:

1. To bring together colleagues from all disciplines relating to sorghum and millet production, milling, transport and consumption, and establish research priorities.

2. To bring together East African sorghum and millet workers through workshops or inter-country travel to encourage increased cooperation and exchange of materials and ideas.

3. To act as a facilitator in establishing INTSORMIL and East African sorghum/millet workers as collaborative teams.

4. To establish a strong sorghum breeding program in Tanzania, and develop germplasm appropriate for small farmers in the region.

Problems and Opportunities

The INTSORMIL scientist, Dr. John Mann, posted to Tanzania, for official reasons was asked to leave Tanzania by July 1, 1984. The Tanzanian project was completely quiescent during Year 6.

During a 1985 trip to Kenya and Uganda, however, Dr. Mann was able to hold useful discussions with D. Gowdens Mitawa and Mr. Hamis Saadan, coordinator and sorghum breeder, respectively, in the TARO sorghum/millet program. From these conversations it was obvious that the core of the sorghum/millet program is still most interested in INTSORMIL involvement and germplasm and technology exchange.

Sorghum/Millet Constraints Researched

Constraints

The constraints to sorghum and millet production in Tanzania are very similar to those in neighboring countries such as Kenya. The impression of

sorghum (especially) as a "backwards" crop does exist, and many people in the country still go hungry with maize failures when either sorghum or millet would have provided good crops. In addition, the country suffers from a lack of good improved types, and work is urgently needed on breeding well-adapted, stable cultivars with good food quality. The bird resistance/poor food quality problem is a problem even in those areas where brown sorghums are traditionally grown. In addition, much of the available "exotic" germplasm has poor drought tolerance because of its origins in the Serere program.

Research on Constraints

Research on the constraints detailed above is not being done by an INTSORMIL scientist posted in Tanzania, but Mr. Hamis Sadaan is carrying forward the work initiated by John Mann there, although on a much smaller scale, reflecting the limited resources available to his program and the time available to do the work. John Mann's work in Texas this year has also been directed towards the problems of all of East Africa, and the solutions to the same problems in Kenya will apply directly to Tanzania. His work on synthetic varieties and food type lines will be useful to Tanzania as well as many other areas in East Africa. It is hoped that in the next several years direct involvement in Tanzania will resume, and further assistance to the Tanzanian program can be offered.

Institution Building

Equipment - While no equipment purchased with Year 6 funds were given to the Tanzanian program, a considerable amount of materials purchased in Year 5 were turned over to Mr. Saadan in the first few days of Year 6, including both office and field supplies. Included were field books, staplers and staples, pencils and pens and a number of other items not available for purchase in country.

Training - The coordinator of the national sorghum/millet program, Dr. Gowdens Mitawa, is a graduate of the University of Nebraska - Lincoln, and did his work within the INTSORMIL framework with Dr. Charles Francis. He is also now the director of the Ilonga station, and was until recently the coordinator of the national FSR effort. He has resigned that position so that he can continue to work on sorghum and millet agronomy work. The breeder, Mr. Hamis Saadan, is a graduate of Texas A&M University under the

tutelage of Dr. Miller. Two more breeders are currently in training in INTSORMIL institutions; Mr. Emanual Monyo, studying for a Ph.D under Dr. John Axtell at Purdue University and Mr. Robert Mushi, also working on a Ph.D, but with Dr. Bill Ross at the University of Nebraska. While it is unlikely that both of these men will remain within the sorghum/millet program, they will still make strong contributions to their country, and also be excellent collaborators with INTSORMIL scientists.

General Comments

We know that INTSORMIL germplasm is well adapted there, and INTSORMIL should look for every opportunity to continue collaboration with Tanzania.

Tanzania, both geographically, politically and culturally is a part of East Africa, and thus should be considered as a part of the Sudan/East Africa zone. Because of differences in all of these factors between Sudan and the rest of East Africa, perhaps Tanzania, Kenya, Uganda, etc., should be considered as a separate zone. While Tanzania offers the most potential for sorghum/millet work in the region, its infrastructure might not allow it to be considered a prime site, even if East Africa were made a separate ecogeographical zone.

Training

INTSORMIL gives high priority to training host country scientists who will have major responsibilities for sorghum and millet research in their home countries. Training is also provided for young U.S. scientists who plan for careers in overseas development work.

The most frequently used training system is graduate study for advanced degrees, with the students' research forming an integral part of an INTSORMIL project, or being very closely related to it.

During the year covered by this report, 157 students (104 international and 53 U.S.) were advised by INTSORMIL principal investigators. Thirty-nine of the students were female and 118 male. Students funded by INTSORMIL totaled 69 (50 international and 19 U.S.). Eighty-eight other students funded from other sources but working on INTSORMIL projects received varying amounts of research support. The international students came from 39 different countries.

INTSORMIL is also cooperating with ICRISAT on a 10 year special training program aimed at the Southern Africa Development Coordinating Conference countries. This program, funded principally by USAID regional funds, is independent of the training activities described above.

Following is a tabulation of Year 6 INTSORMIL training activities.

YEAR 6 INTSORMIL TRAINING REPORT

AGRONOMY/PHYSIOLOGY

Project	M.S.	Ph.D	Country	Male	Female	Funded by INTSORMIL	Research Support
KSU-2		1	Philippines	1		1	
		1	U.S.	1		1	
		1	Mexico	1			1
KSU-6	1	1	Botswana	1	1		2
NU-8	1		Mexico	1			1
	1		Philippines	1			1
NU-13		1	Botswana	1			1
	3	1	U.S.A.	1	3	1	3
		1	Egypt	1			1
		1	Nigeria	1			1
		1	Canada	1			1
		1	Bhutan	1		1	
		1	Philippines	1		1	
	1		Australia	1			1
NU-14		3	U.S.	3			3
		2	Philippines	1	1	2	
	1		Colombia		1	1	
		1	Iraq	1			1
		1	Nigeria	1			1
	1		India	1		1	
NU-16		1	Mali	1			1
		1	Colombia	1			1
		1	Mexico	1		1	
		2	India	2		2	
	1		U.S.	1			1
	1		Sudan	1			1
TOTALS	11	23		28	6	12	22

PLANT BREEDING

UA-1	1	1	Yemen A.R.	2			2
	1		Tunisia	1			1
	1		Congo	1			1
		1	Malawi	1			1
	2		Libya	2			2
	1	1	Somalia	2		1	1
		1	Brazil	1			1
		1	Saudi Arabia	1			1
	2		U.S.	2			2
		1	Ethiopia	1			1
		1	Sudan	1			1

PLANT BREEDING - Continued

Project	M.S.	Ph.D	Country	Male	Female	Funded by INTSORMIL	Research Support
MSU-4		1	Colombia	1		1	
		1	Indonesia	1			1
		1	U.S.		1	1	
NU-15		1	Tanzania	1		1	
	1		Senegal	1			1
		3	U.S.	3		1	2
PRF-3A	1		Tanzania	1		1	
		1	Colombia		1	1	
		1	Sudan	1			1
	1	2	U.S.	3		2	1
PRF-7		1	U.S.	1			1
TAM-21		1	France		1		1
		1	Venezuela	1			1
		1	Honduras	1			1
		1	Senegal	1			1
		1	India	1			1
	1	1	Mexico	2		1	1
	3	3	U.S.	4	2		6
TAM-22	1		Somalia	1			1
		1	India	1		1	
		2	U.S.	1	1	2	
TAM-23	1		U.S.	1		1	
TOTALS	17	31		42	6	14	34

ENTOMOLOGY

KSU-4	1	3	Sudan	2	2	4	
	1		Cameroon	1		1	
MSU-5	2		Honduras	2		2	
TAM-25		1	Senegal	1		1	
		1	Brazil	1			1
	1		Colombia		1	1	
	1		Sudan	1		1	
		1	Botswana	1			1
	1		Nicaragua	1		1	
	1	1	U.S.	2		2	
TOTALS	8	7		12	3	13	2

FOOD QUALITY AND UTILIZATION

Project	M.S.	Ph.D	Country	Male	Female	Funded by INTSORMIL	Research Support
MSU-3		1	Dominican Rep.		1	1	
	1		China		1	1	
	1	1	U.S.		2	2	
PRF-3B		1	U.S.	1		1	
PRF-4B	1	2	U.S.	1	2	1	2
TAM-26		1	Honduras	1			1
	1		Panama	1		1	
		1	Senegal	1			1
	1		Mali		1		1
	1		Argentina		1	1	
	1		Haiti		1		1
		1	El Salvador		1	1	
	2	2	Mexico	3	1	3	1
	5	3	U.S.	4	4		8
TOTALS	14	13		12	15	12	15

PATHOLOGY

MSU-6		1	Nicaragua	1		1	
	1		Kenya	1			1
	2		Dominican Rep.	1	1		2
	1		Brazil	1			1
NU-10		1	Colombia		1	1	
		1	Nigeria	1			1
	1		Iraq	1			1
PRF-6		1	Ethiopia	1		1	
		1	Sudan	1		1	
TAM-24	1		Mali	1			1
	1		Botswana		1	1	
		1	El Salvador	1		1	
		1	Mexico	1		1	
		1	India	1		1	
		1	Venezuela	1			1
		1	Germany	1			1
		1	Argentina		1	1	
		5	U.S.	3	2		5
TOTALS	7	16		17	6	9	14

SOCIOECONOMICS

Project	M.S.	Ph.D	Country	Male	Female	Funded by INTSORMIL	Research Support
NU-17	2		Philippines	1	1	2	
PRF-5		1	Sudan	1			1
		1	Nigeria	1		1	
		1	Burkina Faso	1		1	
	1	1	U.S.	1	1	2	
UK-1 & 2		1	Iraq	1		1	
		2	U.S.	1	1	2	
TOTALS	3	7		7	3	9	1

Acronyms

ADC's	Advanced Developing Countries
ADIN	Nursery for Disease and Insect Resistance
AID	Agency for International Development
AID/ES	Agency for International Development/El Salvador
AID/H	Agency for International Development/Honduras
APHIS	Animal and Plant Health Inspection Service, U.S.
ARC	Agricultural Research Corporation, Sudan
ARS	Agricultural Research Service
ASA	American Society of Agronomy
ATIP	Agricultural Technology Improvement Project
AZ	University of Arizona
BIFAD	Board for International Food and Agricultural Development
BPI	Bureau of Plant Industry, Philippines
CARS	Central Agricultural Research Center
CATIE	Centro Agronòmico Tropical de Investigaciòn y Enseñanza
CENIAP-FONAIAP	Venezuela Agricultural Research Agency
CENTA	Centro de Technologia de Agricola, El Salvador
CESDA	Center for Agricultural Research, Dominican Republic
CIAB	Agricultural Research Center of the Lowlands, Mexico
CIAT	International Center for Tropical Agriculture, Colombia
CILSS	Interstate Committee for Drought Control in the Sahel
CIMMYT	International Maize and Wheat Improvement Center
CIRAD	Departement du Centre de Coopèration Internationale en Recherche Agronomique pour le Dèveloppement
CLAIS	Consejo Latin Americana de Investigadores en Sorgho
CNRA	National Center for Agricultural Research, Senegal
CRSP	Collaborative Research Support Program
DAR	Department of Agricultural Research, Botswana
DAR	Division of Agronomic Research, Mali
DC's	Developing Countries
DECOR	Department of Rural Economy, Niger
DOA	Department of Agriculture, Botswana
DR	Dominican Republic
EAP	Escuela Agricola Pan Americana
EEP	External Evaluation Panel

Previous Page Blank

ELISA	Enzyme-linked Immunosorbent Assay
EMBRAPA	Empresa Brasileira de Pesquisa Agropecuaria, Brazil
EMBRAPA-CNPMS	EMBRAPA - Centro Nacional para Maize e Sorgo
FAO	Food and Agriculture Organization of the United States
FHIA	Fundacion Hondurena de Investigacion Agricola, Honduras
FRC	Food Research Center, ARC, Sudan
FSR	Farming Systems Research
FSR/E	Farming Systems Research/Extension
FSSP	Farming Systems Support Project
FSU	Farming Systems Unit, Burkina Faso
GASGA	Group for Assistance on Systems Relating to Grain after Harvest
GOB	Government of Botswana
GRA	Graduate Research Assistant
GTZ	German Agency for Technical Cooperation
HTS	High Tannin Sorghum
IAC	International Agriculture Center
IAN	Institute Agronomia Nacional, Paraguay
IANR	Institute of Agriculture and Natural Resources
IBRAZ	Institut Burkinahe de Recherache Agronomique et Zoologique
ICA	Instituto Colombiano Agropecuario/Colombian Agricultural Institute
ICARDA	International Centre for Agricultural Research in the Dry Areas
ICRISAT	International Crops Research Institute for the Semiarid Tropics
ICTA	Instituto de Ciencias y Technologia Agricolas, Guatemala
IDIAP	Agricultural Research Institute of Panama
IDIN	International Nursery for Plant Disease and Insects
IDRC	International Development Research Center
IER	Institute of Rural Economy, Mali
IFPRI	International Food Policy Research Institute
IHAH	Instituto Hondureno de Antropologia e Historia
IICA	Instituto Interamericano de Ciencias Agricolas de la OEA
INCAP	Instituto de Nutricion de Centro America y Panama
INIA	Instituto Nacional de Investigacions Agricola, Mexico
INIAP	National Agricultural Research Institute, Ecuador
INIPA	National Agricultural Research Institute, Peru
INRAN	Institute Nigerien du Recherche Agronomic, Niger

INTA	National Agricultural Technology Institute
INTSORMIL	International Sorghum/Millet, CRSP
IPA	Instituto de Pesquisas Agronomicas, Brazil
IPB	Institute of Plant Breeding, Philippines
IPM	Integrated Pest Management
IRAT	Institute of Tropical Agriculture and Food Crop Research
IRRI	International Rice Research Institute
ISA	Instituto Superior Agricola
ISAVN	International Sorghum Anthracnose Virulence Nursery
ISRA	Institute of Agricultural Research, Senegal
ISVN	International Sorghum Virus Nursery
ITAT	International Tropical Adaptation Test
KSU	Kansas State University
LDC's	Less Developed Countries
LTS	Low Tannin Sorghum
ME	Management Entity
MDMV	Maize Dwarf Mosaic Virus
MIAC	MidAmerica International Agricultural Consortium
MIPH	Integrated Pest Management, Honduras
MOA	Memoranda of Agreement
MOU	Memorandum of Understanding
MRN	Ministerio de Recursos Naturales, Honduras
MSU	Mississippi State University
NCRP	National Cereals Research Project
NDFRS	National Dryland Farming Research Station, Kenya
NSA	National Seed Administration, Sudan
NSF	National Science Foundation
NU	University of Nebraska
OAU	Organization of African Unity
PCARRD	Philippine Council for Agriculture and Resources Research Development
PCCMA	Programa Cooperativo Centroamericano para el Mejoramiento de Cultivos Alimenticios
PI	Principal Investigator
PRF	Purdue Research Foundation

SACCAR	Southern African Centre for Co-operation in Agricultural Research
SADCC	Southern Africa Development Coordination Conference
SAFGRAD	Semi-Arid Food Grains Research and Development Project
SAFGRAD/IDRC	SAFGRAD/Canadian International Development Research Center
SAT	Semi-Arid Tropics
SDMVN	Sorghum Downy Mildew Virulence Nursery
SICNA	Sorghum Improvement Conference of North America
SIDA	Swedish International Development Agency, Zambia
SMARC/UPSCM	Southern Mindinao Agricultural Research Center/University of the Philippines, Southern Mindinao
SRN	Secretaria de Recursos Naturales, Honduras
TAES	Texas Agricultural Experiment Station
TAM	Texas A&M University
TARO	Tanzania Agricultural Research Organization
TROPSOILS	Tropical Soils Collaborative Research Program, CRSP
UANL	Universidad Autonoma de Nuevo Leon, Mexico
UHSN	Uniform Head Smut Nursery
UK	University of Kentucky
UNISON	University of Sonora, Mexico
UNL	University of Nebraska - Lincoln
UPLB	University of the Philippines, Los Banos
US	United States
USAID	United States Agency for International Development
USDA	United States Department of Agriculture
WARS	Western Agricultural Research Station, Kenya
WSARP	Western Sudan Agricultural Research Project