PN-AAU-385
ISN= 45988

TRAINING IN ALTERNATIVE ENERGY TECHNOLOGIES

Solar Energy Laboratory

University of Florida

Gainesville

File Copy
7/25/80

(7)

PHOTOVOLTAIC REPORT

TAET Group Project

4/16/80 - 7/25/80

TRAINING IN ALTERNATIVE ENERGY
TECHNOLOGIES
SOLAR ENERGY LAB.
UNIVERSITY OF FLORIDA

PHOTOVOLTAIC REPORT

I. Introduction

1.1 History of Photovoltaics
1.2 Photovoltaic Theory
1.3 Silicon Solar Cells

II. Economic Consideration of Terrestrial Photovoltaic Applications

III. Solar Cell Fabrication

3.1 Silicon Cells
3.2 Thin Film Cells
3.3 Tandom Cells

IV. Solar Cell C/Cs

4.1 Without Concentration
4.2 With Concentration

V. Basic Photovoltaic System Components

5.1 Solar Generator
5.2 Protective Diode
5.3 Battery Storage
5.4 Inverter/Converter
5.5 Appropriate Switches/Circuit Breakers

VI. Solar Cell Encapsulation

VII. Solar Cell Contacts and Interconnects

VIII. Testing of Solar Cells or Solar Array

8.1 Using Natural Sunlight (AM1)
8.2 Using Sunlight Simulator

IX. Solar Array Installations

X. Site Selection Considerations

XI. Solar Cell Manufacturing Facility

XII. Different Types of Batteries

12.1 Conventional Batteries
12.2 Metal-Gas Batteries
12.3 Alkali Metal-High Temperature Batteries

XIII. Batteries Fundamental Quantities

XIV. Conclusion

XV. List of References

PHOTOVOLTAICS

Introduction

The expected depletion of the world's fossil fuel supply together with its present unstable price has revived interest in the conversion of the sun's energy into electricity, an energy form to which modern society has become heavily dependent. However, before the sun's energy can provide electricity on the scale needed by man, two (2) technical problems have to be resolved:

1) The manner of converting the energy of the sun's radiation into electricity.
2) The electricity thus generated must be available where it is needed, when it is needed and at the time it is needed.

The above solution furthermore must be attained at economically accepted prices.

Of the three (3) possible ways of converting solar radiation to electricity:

1) Photovoltaic effect
2) Thermoelectric effect
3) Thermoionic effect

only the first can do it directly. The photovoltaic effect involves the generation of electromotive force as the result of the absorption of ionizing radiation. The absorption of photons create equal numbers of positive and negative charges, which can then be separated to develop an EMF (photovoltage) and a current (photocurrent) thus allowing power to be delivered to an external load.

The effect was first recorded in 1839 by E. Becquerel. The first solid state system was based on selenium. Work on it and Cu - Cu_2O systems led to the development of exposure meters for photography. However, these devices could not be considered as practical means for generating electricity in the scale usually needed for domestic or industrial purposes. It was only 1954, when the effect was demonstrated on silicon - a semiconductor - that the

possibility of generating useful quantities of electricity was recognized.

Theory

At this point it might be proper it explain qualitatively how the photovoltaic effect occurs using silicon as the model.

Silicon's atomic number is 14 and its electronic configuration is $1s^2$, $2s^2$, $2p^6$, $3s^2$, $3p^2$ 3d. There are four (4) electrons in its outermost shell - the valence shell. In the formation of the silicon crystal, the pair of electrons in the 3s orbital is uncoupled and one of them is promoted to the next but energetically slightly higher p-orbital resulting in four (4) unpaired electrons. Thus silicon is tetracovalent. As a result of hybridisation between the 3s orbital and the three (3) 3-p orbitals, four (4) equivalent orbitals directed towards the corners of a tetrahedron - the sp^3 hybrid orbitals - are formed. Each of them contains one of the four valence electrons. Each silicon atom shares each one of these electrons with one electron from a neighboring silicon atom. The result is a silicon atom surrounded by four (4) other silicon atoms, which are equivalent from one another and located at the corners of a tetrahedron. This pattern is repeated indefinitely resulting in this, thus dimensional cubic crystal structure characteristic of the diamond. All of the electrons are accommodated in the valence shells which form the valence band in the crystal. The vacant 3d orbitals form this conduction band. At absolute zero temperature, this conduction band has no electrons; above absolute zero, enough thermal energy is available to uncouple the electron pair of some of the Si-Si bond and promote one-half to the conduction band, so that there are always some electrons in the conduction band available for conducting electricity. Thus, the silicon crystal has intrinsic conductivity.

The electron(s) promoted to the conduction band leaves a "hole" behind to which an electron from a neighboring bond may migrate filling it and leaving a new "hole" behind. The electrons and the holes - called electrons - hole pairs - therefore move within the crystal. This joint motion makes up the electric current.

Similarly, slight impinging on the Si crystal can likewise supply energy sufficient to break some of the Si-Si bonds. This is the basis of the photovoltaic effect.

The conductivity of Si may be increased by introducing impurities into the

the crystal lattice such as other atoms either with more or with less valence electrons. This is called doping. If the dopant were P, which has five (5) valence electrons, the extra electron has to be accommodated in the conduction band. If the dopant were B, with three (3) valence electrons only, one of the electrons of Si is left unpaired and a "hole" is formed. The first type is an N (for negative) type of semiconductor and the second is a P (for positive) type of semiconductor. These materials possess extrinsic conductivity.

In addition to increasing the conductivity, doping makes the semiconductor preferentially negative to electrons or "holes" depending on whether it is of the N or P type.

To use the electron hole pair to generate electricity, the electrons must be prevented from recombining with the holes until they have travelled along an external circuit and performed useful work. This can be done by making use of the preferential attraction for electrons and holes by the N-type semiconductor and P-type semiconductor respectively. In a crystal made up of a layer of N-type Si and a layer of P-type Si, the N-type will attract electrons and the P-type will attract holes from any electron-hole pair produced near the junction of the N-types and P-types. This result is a net migration of electrons from the P-layer to the N-layer and a corresponding net migration of holes in the other direction. Electrons accumulate in the N-layer and "holes" in the P-layer so that a potential difference builds up sufficient to upset further other electrons back to the p-layer.

By connecting leads to the N- and P-layer, the electrons trapped in the n-layer pass through the metallic lead through a load and back into the P-layer where they recombine with the holes.

In the silicon crystal, the conduction band's energy is approximately 1.1 eV higher than that of the valence band. This is the energy gap. A photon must have an energy at least equal to it before it can interact with and promote an electron from the valence to the conduction band. This corresponds to a wavelength of 1.1 μm.

FIGURE 3.

In the diagram a) is a photon with $\lambda = 1.1$ μm. Therefore it can dislodge an electron from the band, promote it to the conduction band and leave a hole

behind. The electrons go to the N-layer; the holes in the P-layer. The electrons migrate to the current collector, passes through the external load and returns to the Si crystal in the P-layer to recombine with the hole. b) is a photon with shorter λ or an energy > E gap. This also gives rise to an electron-hole pair. The excess energy is transformed into heat. c) is o photon with layer λ and therefore does not interact with the electrons. d) is a reflected photon. We can therefore see that the ability of the Si crystal to generate electricity will be limited by:

- almost half of the energy reaching the earth from the sun have λs > 1.1 μm and therefore unusable.
- a substantial portion of the energy of the photon having λs < 1.1 μm is transformed into heat and not electricity.
- a substantial fraction of the solar spectrum having very short λs are filtered out by the atmosphere.
- some of the radiation is reflected.
- part of the crystal's surface must be covered by the electron collectors.
- some of the pairs generated will fail to reach the junction and are not separated.

The devices used to convert sunlight directly to electricity by the photovoltaic effect are called solar cells. The silicon solar cell is the most developed and to date it is the only one commercially available. Conventionally it is prepared from single crystals grown from highly purified (semiconductor grade) silicon either by the Czachralski or the floating zone method. The method is expensive and uses large amounts of energy, hence the present cost of the silicon solar cell is still high for terrestial use. Much research work is in progress to reduce this cost to acceptable levels along the following lines:

- reducing the cost of the starting Si
- reducing fabrication cost
- improving conversion efficiency

The succeeding speakers will elaborate on these.

Economic Considerations of Photovoltaic Cells & Systems

With delining and uncertain supply of oil and rapid escalation of oil prices photovoltaic tenchnology seems to be and will be one of many possible alternatives which in combination will be expected to meet the bulk of energy requirements of many countries in the long term.

At today's market price of between $10 & $30 per peak watt, solar-cell power is too expensive to compete with fossil fuel and nuclear power. The electricity produced by photovoltaic systems is 25 to 100 times more expensive than electric generated by conventional systems. As a result current applications of photovoltaic systems are small-scale, i.e. generally less than one peak kilowatt and most are located in remote areas where utility grid inter-ties would be very expensive.

In view of the foregoing a lot more work remains to be done to reduce the cost of photo cells and related systems. Development work to reduce the cost of photovoltaic energy can be divided into three general categories: (i) reducing the cost of manufacturing the single-crystal silicon cells which are the most commonly used and are therefore readily available in the market. Much can be done to trim costs. For example, much of the work that goes into the fabrication of commercial cells is now done by hand. Automation of cell manufacture and assembly could lead to substantial cost reduction. The high cost of present cells is also partly attributable to the fact that the quality of semi-conductor silicon now being used in cell manufacture is much higher than is necessary, lower quality silicon crystals would cost much less, with only a modest sacrifice in cell efficiency. Another important cost factor stems from the large quantities of energy and materials used to make cells. More than 60% of the silicon material produced with a considerable expenditure of energy - about 70% kwh per cell, is typically wasted in this process. A much more efficient approach would be to grow continuous, crystalline sheets from molten silicon; (ii) Developing techniques for mass production and increasing the performance of cells made from thin films of materials such as Cds/Cu 2S or amorphous silicon. Experience shows that in most production technologies economies of scale are gained by mass production. It is being argued by advocates of silicon cells that if cells were produced on a truly large scale - greater than one billion peak watt per annum -

the cost of solar cell per watt would be between 20 and 50 cents; (iii) Developing high-efficiency cells which can be installed at the focus of magnifying optical systems. The cell cost is much less important for concentrating systems, which use large areas of relatively inexpensive lenses but small numbers of solar cells. For these systems, the solar cell efficiency has a much larger effect than cell cost; for example, increasing the efficiency from 15% to 20% of cells which cost $1250/m^2$ has the same effect as lowering the cost to $125/m^2$.

U.S. DEPARTMENT OF ENERGY PROJECTION FOR COST REDUCTION OF SOLAR CELLS IN 1975 DOLLARS

Year	Cost Per Peak Watt	Annual Production in MW
End of 1977	11	———
" " 1978	7	———
" " 1982	1-2	20
" " 1986	0.50	500
" " 1990	0.10-0.30	50,000

It is anticipated that industry response, or reduction in photovoltaic cell price, will result from cumulative production experience.

As indicated in Figure 1, a sharp downward trend in price of photovoltaic cells is expected to result from aggressive, Federal R/D program. This Federal program would support development of both existing and new technology. Another important parameter in scaling down the cost of photo cells is cumulative production experience gained by manufacturers. The sharp down trend is represented by a 75% experience curve slope through a price level of 50 cents per peak watt. At 50 cents, it is assumed that new technology is required to serve the market. Below 50 cents, the experience curve slope changes 90 percent and price reductions continue to 20 cents per peak watt.

Figure 2 with 90 percent experience curve and without an aggressive R/D program, reduction in prices and growth in experience would be slow, i.e. at cumulative production mark of 10^{12} mwp. Figure 3 shows that with an aggressive Federal program supporting technology development, break through technology is assumed to decrease in price at 75% experience slope to 20 cents per watt.

Systems Economics

The economies of scale that favor mass production and that make bulk power production from conventional power plants seemingly don't favor large solar power plants. Due to variation in sunlight intensity many small solar power plants scattered widely over a region may yield more average power than a big single station with power capacity equivalent to combined capacities of such small units. Another important parameter is that unlike in a conventional power system in which site area per unit power output decreases with increasing capacity, the site area increases linearly with capacity for solar plants.

The cost of auxiliary equipment greatly influence the cost of solar power per unit. The auxiliary equipment which influence the cost are mirrors or lenses for concentrating systems, voltage converters, etc.

Energy storage can also substantially drive up power costs. The solar power units or microwave repeaters charge electrochemical batteries, so electric power is available at night and during heavy overcasts. At the moment storage batteries are very expensive for a large solar system; such storage batteries at the moment account for more than 20% of the toal system costs.

Dr. Joseph Loferski of Brown University says that irrespective of what technology is adopted, large-scale solar power will not be practical until such time that economical energy storage system is developed. This does not apply to all applications in which solar power can be put to. Some applications such as water pumping for irrigation don't require storage. In water pumping for irrigation the water pumped can be used directly and any excess water stored for future use. According to some analyses at solar cell prices of between $1 and per peak watt, solar power would be more economical than diesel powered pumps for irrigation at today's diesel prices.

In countries in which villages are remotely located from the national grid and energy supply infra-structure is very poor, photovoltaic power is at $5 to $8 per peak watt for cells with 10% efficiency.

A study sponsored by the Electric Power Research Institute to compare flat-plate fixed solar systems with concentrater systems revealed that there is a close relationship between efficiency and cell cost in flat-plate collectors. For example, if the efficiency of cells is doubled, their allowable costs can be doubled. However, the allowable cost of cells for flat-plate systems is substantially smaller than for concentrator systems. For example, if the area-relate cost of a flat-plate system is $40/m^2$ and the cell efficiencies are 20%, the

allowable cost for cells is about $\$24/m^2$. Since 1 m^2 of cells with 20 percent efficiency produces 200W, the price per peak watt must be no greater that 12 cents for 1-MW (or greater) output. But, if cell efficiency is only 15 percent, the allowable cost becomes even more difficult to attain: $\$10/m^2$ or about 7 cents per peak watt.

Examples of Incentives That May Help Reduce Cost of Photovoltaic Cells:

(i) Low Interest Loans: These could be given directly by the Government or through banks or utilities with rate of interest of between 2% and 5%. Repayment period could be extended to between 8 and 25 years. In this respect only interest is subsidized.

(ii) Accelerated Depreciation/Rapid Amortization tied to sales:

- 5 to 10 year amortization
- Increase value of depreciation by shortening time.

(iii) Grants: For all or part of plant or equipment costs; for specific development work for construction.

(iv) Tax Actions: Investment tax credits for say 5 years carry forward and/or 2 years carry back tied to sales.

(v) Price Supports: Payment by Government of a differential when market prices fall below a predetermined support level.

(vi) Federal Purchases: Government purchase for government use;

- Guaranteed market at stated price
- Government as purchaser of last resort

(vii) Funding for Research & Development: Government grants, contracts & loans administered by Government agencies.

Conclusion:

With the continued escalation of fossil fuel prices, photovoltaic power will be competetive with power generated by conventional systems in the next few years.

Fabrication of Photovoltatic Cells

There are three topics which will be discussed:

1) Photovoltaic materials
2) Fabrication processes
3) High efficiency cells.

1) Photovoltaic Materials:

Theoretically the photovoltaic materials will convert the solar radiation more efficiently if their energy gaps are about 1.5 eV which is the peak of the efficiency curve (see Fig. 1). Some of these materials are Si, Cu_2S, InP, GaAs, CdTe and AlSb. Besides the energy gap the abundance of the photovoltaic substance is also benificial. Silicon is one of the most abundant elements on the earth. Its processing technology is more advanced than that of other semiconducting compounds. However, several semiconducting compounds have demonstrated superior performance, and many are plentiful. The most highly developed compound cells are made of GaAs and Cu_2S/C_dS. There are also variety of other promissing compounds and alloys of two, three, four and five elements, yet to be explored. Since their energy gaps and other parameters can be adjusted to achieve higher performance. Such materials are CdTe, Zn_3P_2, Cu_2O, InP, $Al_xGa_{1-x}As$ and $CuInSe_2$.

2) Fabrication Processes:

a) Single crystal p-n junction cells. This type of cell can be made by formation of p-n junction either by diffusion or implantation of dopant. In general any single crystal semiconductors which can be made p-type or n-type can form p-n junction by this way. Commercially available cells is silicon cells (see Fig. 2).

b) Thin film system. Some semiconducting compounds which have direct band gap can absorb photons in a much thinner layer of material than silicon can. Therefore, less material is needed. The thin film preparation of each layer can be made by various techniques such as vapor deposition, sputtering, chemical spray deposition, sintering and electro-deposition. The photovoltaic junction can be hetero junction, Schottky barrier, MIS or SIS. The electrical contacts are formed by vapor deposition, or spray process or electro-deposition. For thin film system the fabrication can be either front wall cells or back wall cells (see Fig. 3 and 4).

3) High Efficiency Cells:

In the past few years the efficiency of solar cells has been raised to about 22% in GaAs cells. The efficiency of silicon cells has also increased to about 18%. Recently a new kind of solar cell, called tandem cell, has been proposed for getting higher efficiency. The idea is to have multicells, each with different band gap. The sunlight passes through these layers, in order of decreasing band gap, so that each cell extracts its own portion of the solar energy. By this way researchers at Varian Association, Palo Alto, California have measured 28.5% efficiency in a two-cell tandem unit consisting of a gallium-arsenide cell and a silicon cell.

References for Further Reading

1. "Solar Cells", Edited by Charles E. Backus, IEEE press (1978).

2. J. L. Loferski, M. Wolf, and C. E. Backus, IEEE Spectrum, Feb. (1980), pp 30-38.

More recently, 1975, Carmichael, et al. were researching the general encapsulation problem from the stand point of terrestrial arrays having a useful life of 20 or more years. One of their first tasks was to assemble and evaluate world experience and properties of encapsulating materials. They quickly found most of previous R & D had been space oriented and that the classes of materials which had been used as protective covers on silicon solar cells included halocarbons, polyesters, and silicons. They found the adhesives and primers fell into the classes of silicons, epoxies, and elastomers. They pointed out the important conclusion to the systems engineer that "Only limited life data on encapsulant materials for terrestrial environments is available, and the actual experience to date is much shorter than 20 years, with service experience for less that 2 years being typical".

Module design must be based on the use of appropriate construction materials and design parameters necessary to meet the field operating requirements, and to minimize cost/performance.

Assuming a module efficiency of 10%, which is equivalent to a power output of 100 watts/m^2 in midday sunlight, the capital cost of the modules may be calculated as \$70/m^2. Out of this cost goal only 5.4% is available for encapsulation due to the high cost of the cells. The encapsulation cost allocation may then be stated as \$3.8/m^2 which includes all coatings, pottants and mechanical supports for the solar cells.

Assuming a flat-plate array to be the most efficient design, three different basic design variations: a) substrate bonded with the cells supported from the underside, b) Superstrate bonded, with the cells supported on the topside with a rigid transparent material, and c) laminated, with the cells encapsulated in a single material.

Solar cell modules are presently envisioned as being composed of six basic construction elements. These elements are: a) outer covers; b) structural and transparent superstrate materials; c) pottants; d) substrate; 3) back covers; and f) adhesives.

Recent efforts have emphasized the identification and development of potting compounds. Pottants are materials which provide a number of functions, but primarily serve as a buffer between the cell and the surrounding environment. The pottant must provide a mechanical or impact barrier around the cell to prevent breakage,

Basic Photovoltaic System Components:

1. Solar generator, which converts the insulation to useful DC electrical power

2. Protective diode, which lets the array-generated power flow only toward the battery or grid. Without protective diode the battery would discharge back through the solar generator during times of no insulation.

3. Battery storage, in which the solarly generated electric energy may be stored.

4. Inverter/Converter, usually solid state, which converts the battery bus voltage to AC of frequency and phase to match that needed to integrate with the utility grid when the system is connected with it. Thus it is typically a DC/AC inverter. It may also contain a suitable output step-up transformer, perhaps some filtering and power facter correction circuits and perhaps some power conditioning, i.e. circuitary to indicate battery charging and to prevent over-charging. Sometimes, it is preferable to show power conditioning as a separate system functional block.

5. Appropriate switches/circuit breakers, to permit isolating parts of the system as the battery. One would also want to include breakers and fusing protection between the inverter output and the utility grid to protect both the photovoltaic system and the grid.

2. Solar Cell Encapsulation:

To insure high reliability and long-term performance, the functional components of the solar cell module must be adequately protected from the environment by some encapsulation technique. The potentially harmful elements to module functioning include moisture, ultraviolet radiation, heat build up, thermal excursions, dust, hail, and atmospheric pollutants. Additionally, the encapsulation system must provide mechanical support for the cells and corrosion protection for the electrical components.

In about 1973 attention started to be directed toward using one of the various polymeric plastics for cell protection. Fayet's was principally interested in protecting Si and CdS cells for space use, but some of the considerations may have a carry-over value to protection terrestrial arrays.

must provide a barrier to water which would degrade the electrical output, must serve as a barrier to conditions that cause corosion of the cell metalization and interconnect structure, and must serve as an optical coupling medium to provide maximum light transmission to the cell surface and optimize power output. Pottant must obviously have very high transparency, with the exception of superstrate bonded designs in which cells are electrostatically bonded to the transparent superstrate and have no pottant over the front surface.

3. Solar Cell Contacts and Interconnects:

The problem of how solar cells are to be reliably physically connected in an array is a contrivial technical design problem. Interconnecting wires or straps tend to fatigue crack, welds break, solder interfaces to cells peel off, solder that wasn't supposed to crack does, and other types of interconnecting failures have been observed on solar arrays -- all leading to open circuits and partial or total loss of array power. Hence the array reliability is in no small part determined by the security of the cell interconnection means chosen by the array design engineer.

4. Testing of Solar Cells or Solar Arrays:

Testing procedures for solar cells and arrays is a subject of importance to system engineers. There are two ways to test solar cells or solar arrays.

1) Using natural sunlight (AM7)

This method has the merit that the cell or the panel is irradiated with actual perrated terrestrial solar spectrum, which is the same as the cell or panel would later see in actual power producing service. Ray pointed out the disadvantage of this method, the sunlight method for treating solar panels has always presented a problem. There a few cloud-free days with uniform light intensity; therefore, the panels must be tested with existing sunlight conditions, and then the resulting data must be normalized. In the past, many tests on solar panels and the satellites were delayed or not run because of insufficient sunlight at the scheduled test time. Also, control of the temperature of solar panels being tested in sunlight is difficult, if not possible, whereas the artificial sunlight of the test set permits the temperature of the solar panel to be measured and controlled.

2) Using Sunlight Simulator:

One of the major problems with the sunlight simulator is to get the spectrum of the illuminating lamps to match that of natural sunlight.. This is a non-trivial physics type problem difficult enough for space AMO conditions but even more difficult for terrestrial AM1 conditions to match the sun's serrated spectrum. The problem is further compounded by shifts in the spectrum at air masses higher than 1 which are encountered for all sun positions except directly overhead.

5. Solar Array Installations:

The largest terrestrial solar array installations to 1977 was made on an experimental farm near Mead, Nebraska for irrigation purposes. The array was "composed of 28 individual panels each capable for generating approximately 1 KW of peak power output". Its peak output is 25 KW. It drives a 10 H pump for irrigatin 80 acres of corn and soybeans, pumping 1000 gallons of water per minute. The average purchase price was $15.5 per peak watt. A DC to 3-phase AC inverter is between the array and the pump motor. The system also supplies auxiliary power.

The world's largest photovoltaic installation underway in 1978 at the Mississi County Community College, Blytheville, Arkansas, is probably destined to be of historic importance in photovoltaic technology. The heart of the system, manufactured by Solarex, is the solar receivers, each containing 100 glass - faced 20 sun silicon cells that can achieve 14% conversion efficiency at 55°C. There are 600 such receivers. The expected power output is 250 KW peak. The expected $6-$7 per peak watt cost of these concentrator-receiver is lower than that of any photovoltaic arrays are mounted at ground level and are installed in a fenced in enclosed area adjacent to the electrical load.

6. Site Selection Considerations:

From the systems engineering viewpoint, it is believed that where a given photovoltaic array is to be located may have considerable effect on its electric energy produced over its lifetime, substantial effect on the array lifetime and and maintenance, and in general be a determining factor in the suitability of of the solar-electric array for the intended application.

Some general siting guidelines can be identified for photovoltaic arrays are represented as follows:

The photovoltaic arrays should be located:

- Southerly facing to collect the maximum solar energy
- To avoid shadowing caused by nearby buildings, trees, or other objects or apparatus
- To avoid a High SO_2 area if at all possible
- To minimize dust and dirt accumulations on the array panel
- To minimize visual pollution wherever possible
- To minimize snow and ice covering the array as much as possible
- Reasonably near the user load center as is possible consistent with meeting other siting criteria
- Away from known high lightning areas in as much as possible
- Away from known high bird concentrations insofar as possible
- To avoid severe windloads on the array where possible to do so
- To minimize vandalism possibilities insofar as possible

Ravin gives the following suggestions to minimize vandalism and other hazards:

a) in order not to attract attention to the equipment do not use bright colors.
b) mount the equipment on a pole or as high off the ground as possible.
c) do not post "do not tamper" or "keep off" signs except on building type installations which have alarms installed. These signs are invitations to vandals. "Scientific Ecological Experiment in Progress" signs have been found to be generally more effective than warning signs.
d) depending on location, both domesticated and wild animals can cause damage to and be injured by outside equipment. The equipment should be placed off known animal paths wherever possible.
e) secure the equipment with as heavy amount as feasible
f) permanently engrave an identifying serial number in at least two locations on the equipment. One number should be visible, the second number should be concealed.

7. <u>Different types of Batteries:</u>

I. Conventional Batteries:

Lead Acid	Nickel Cadmium
Nickel-Iron	Nickel - Zinc
Silver Zinc	Silver - Cadmium
Zinc-Bromine	

II. Metal - Gas Batteries:

Iron-Air	Lithium-Sulfer Dioxide	Cadmium-Oxygen
Zinc-Oxygen	Magnesium-Air	Aluminum-Air
Nickel-Hydrogen	Zinc-Air	Sodium-Air
Cadmium-Air	Zinc-Chlorine	

III. Alkali Metal - High Temperature Batteries:

Sodium-Sulfer	Sodium-Chlorine
Lithium-Sulfer	Lithium-Iron Sulfide
Lithium-Chlorine	Lithium-Copper
Lithium-Nickel halide	Aluminum-Chlorine

Batteries Fundamental Quantities

1. Open circuit voltage (OCV).
2. Energy capacity:
   a) Energy stored (watt-hours or kilowatt-hours).
   b) Energy stored/weight (watt-hours/kg).
   c) Energy stored/volume (watt-hours/m^3).
3. Power capacity "is the rate at which stored energy can safely be taken out of a battery and restored."
4. Specific power "is the maximum rated power output/kg the battery can supply." Rating various batteries by specific power permits rapid performance comparisons of different kinds of batteries.
5. Energy efficiency:

$$\eta = \frac{\text{useful energy out (watt-hours)}}{\text{recharge - energy (watt-hours)}}$$

6. Cycle life "is the number of times the battery can be charged and discharged under specified conditions." The cycle life of a battery may vary greatly with the depth of discharge, deep discharge tending to result in short cycle life.

Solar Cell Manufacturing Facility

The following series studies, presented at the 3th IEEE Photovoltaics Specialist Conference, were aimed in the direction of eventually creating a mass production facility for photovoltaics:

a) Bickler et al [ ] of JPL envision a factory producing about 20 MW/yr. of silicon photovoltaics at $2.00 per peak watt employing near-term technology and employing about 546 people. Their proposal is a result of JPL's Low-Cost Silicon Solar Array (LSSA) project.

b) Grenon and Coleman { } of Motorola envision the most likely near term process as utilizing Czochralski ignot silicon crystal technology. Round cells of 7.6 cm and of 12 cm diameter would be produced at about a 20 MW/yr. rate. The plant capital cost would be about $20 million.

c) Carbojal's { } of Texas Instruments idealized plant proposal is for a tandom cell, polycrystalline silicon, Czochralski grown crystals. Their cell would be encased in a module of 13% efficiency. The module would be of glass-steel construction. He estimated the manufacturing cost would be $1.31 to $1.51 per peak watt. The plant capital cost was estimated at about $20-25 million and is envisioned for the 1982 time frame.

d) Kran { } of IBM presented the analysis and outlook for a plant based on silicon ribbon technology in the 1978-86 time frame. It would be about a 10 MW peak/year production rate beginning production in 1982. He felt they could meet the $50/m^2 price goal by 1986.

e) Breneman, et al { } of Union Carbide Corporation described a silane plant for producing silicon. They estimate it will cost about $6 million and is planned for the early 1980's.

f) Buhs { } of AEG-Telefunken - described the German program, their phase 1 of which includes building "a complete production line for terrestial silicon solar cells and generators." The plant capacity would be up to 300 peak KW/yr. by about 1985.

g) An important 1976 report by Thornhill and Taylor { } describes the demonstration at spectrolab of the feasibility of 3.37 MW/yr. production rate was invisioned producing cells at $1.22 per peak watt. These will be hexagonal cells.

Calculation of 1 KW (peak) Silicon Solar Generator:

Supply voltage = 60 V —

$$\text{Current} = \frac{1000}{60} = 16.7 \text{ A}$$

Panel dimensions: Length = 560 mm.
width = 240 mm.

Number of panels in series = 4 (32)

Number of panels in parallel = 4 x 32

Total area needed = $17.2 m^2 \approx 20 m^2$

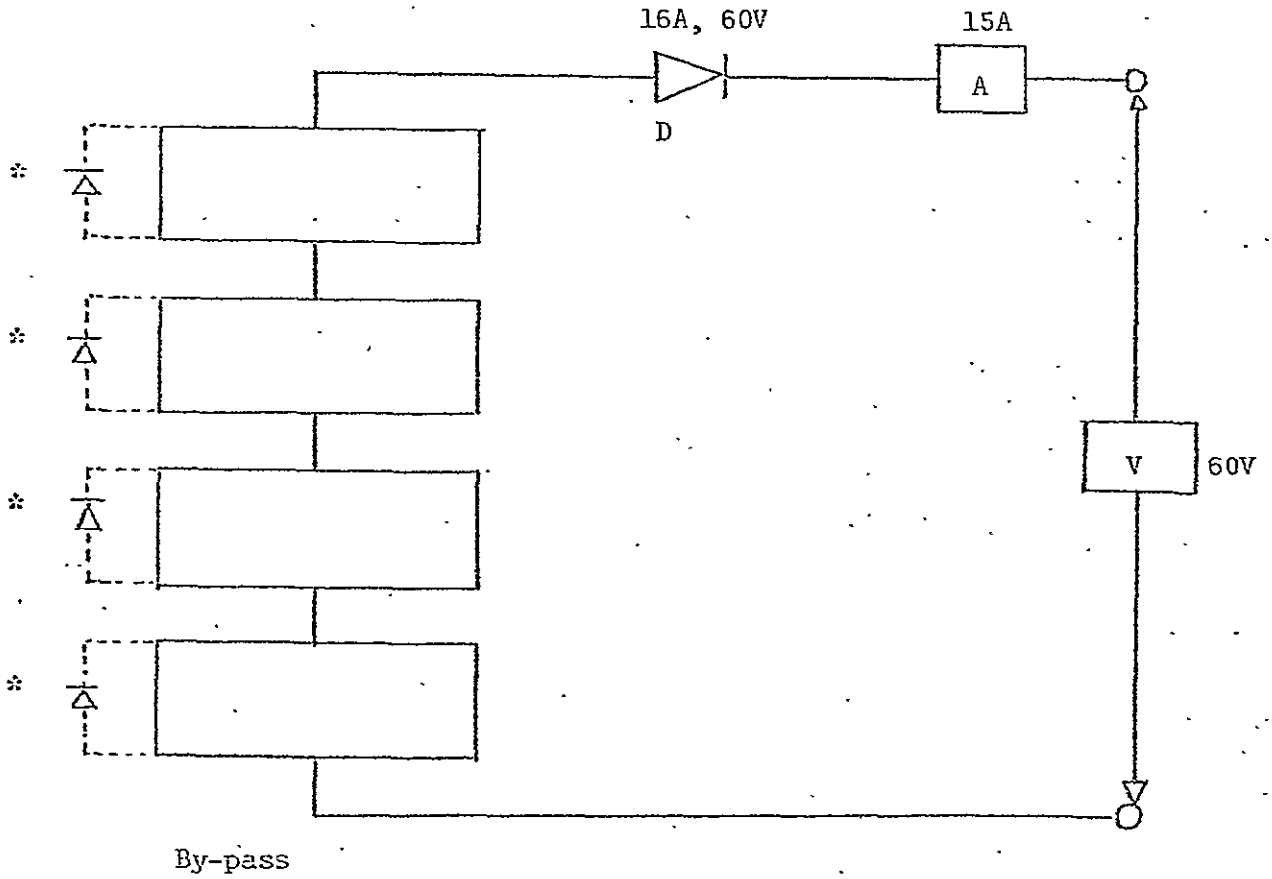

*These diodes are connected in parallel order to prevent the hotspot effect due to cloudes.

D: The protective diode to prevent the current flowing in the direction of S.G.

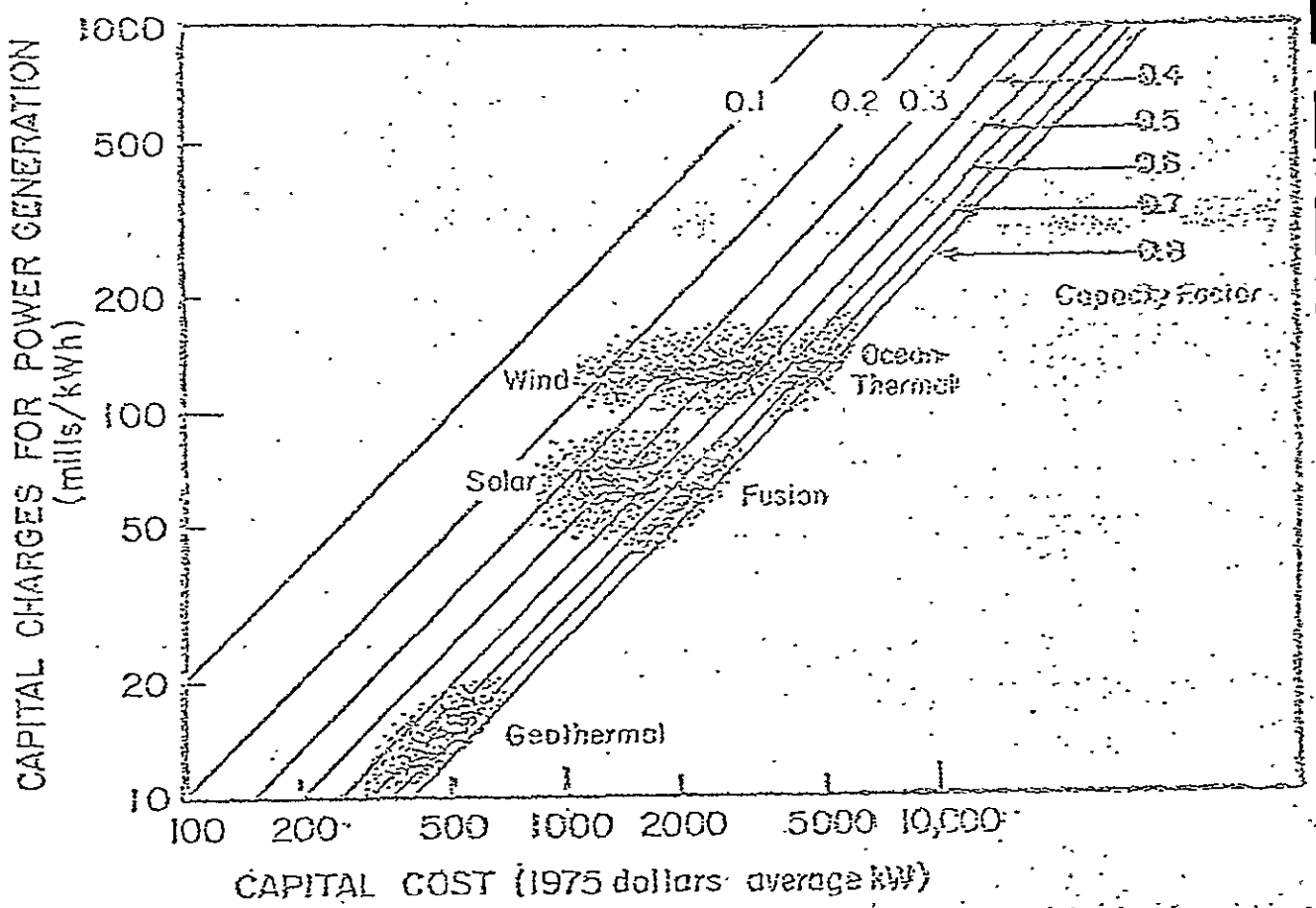

FIG. 1-34 Capital costs and capital charges for new electric power generation options. From Starr [62].

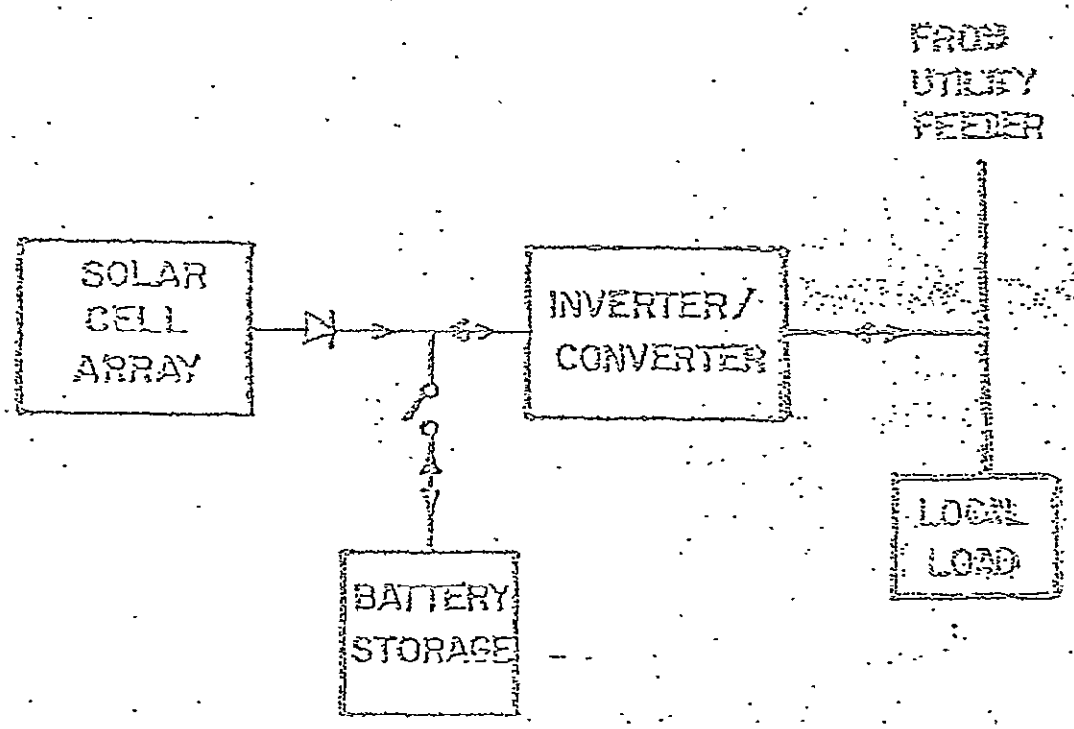

FIG. 2-11 Basic photovoltaic system integrated with the power grid. The system shown was studied by Pittman and Chowanlac [223] for peak powers in the 100 KW to 10 MW range (industrial and commercial customers).

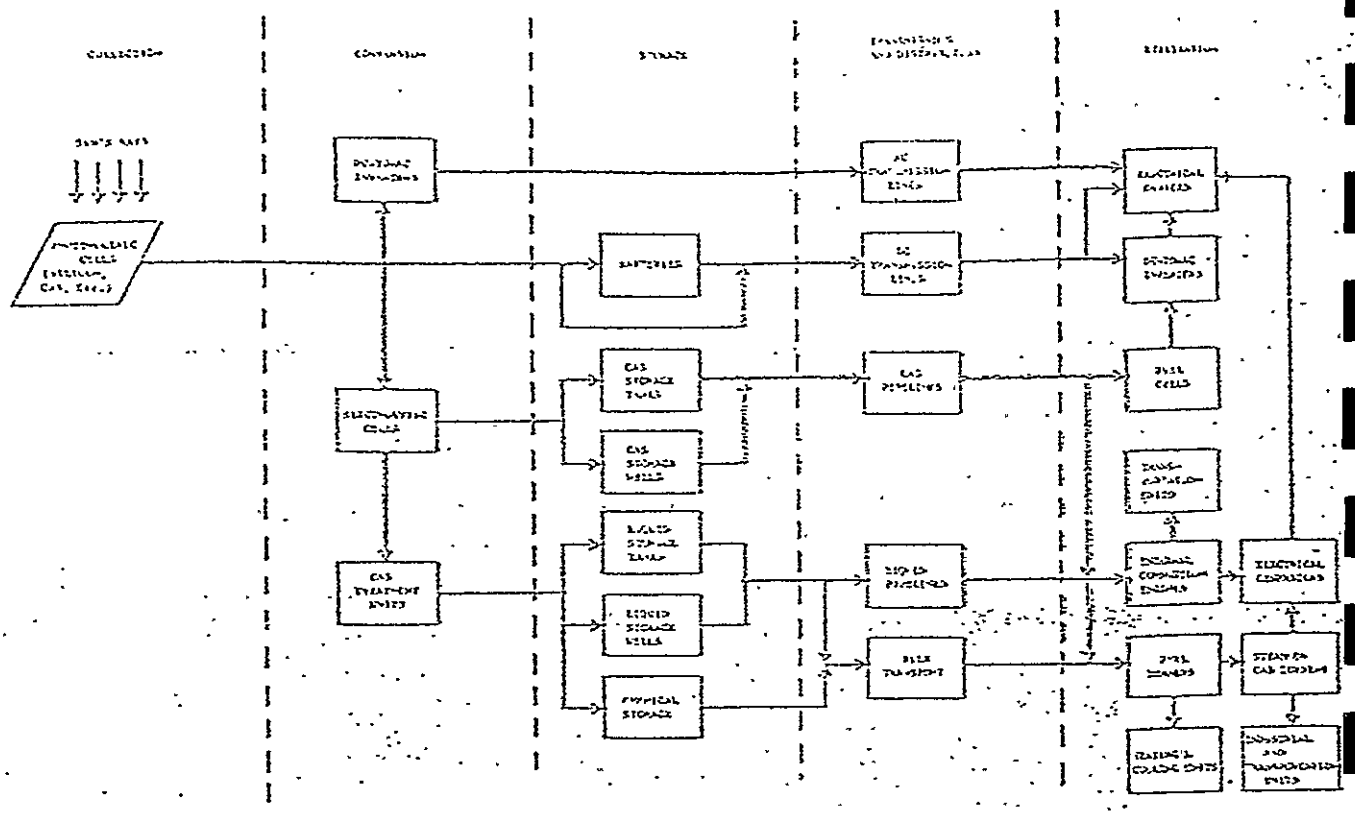

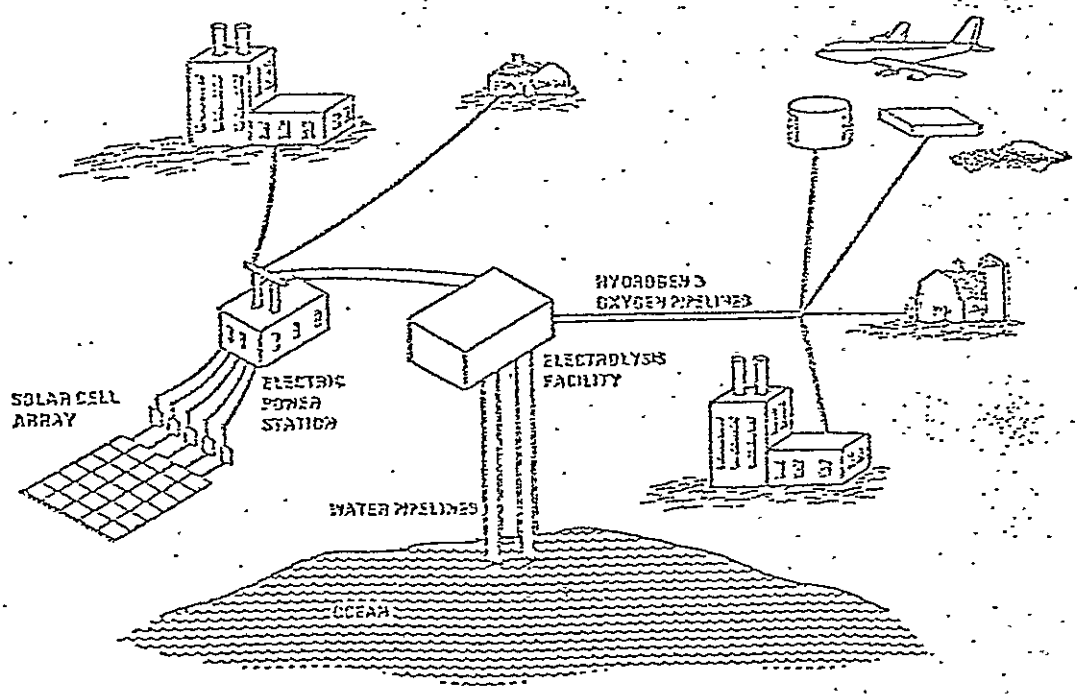

FIG. 2-15 Photovoltaic energy system under study at the MITRE Corporation. From Eldridge [257].

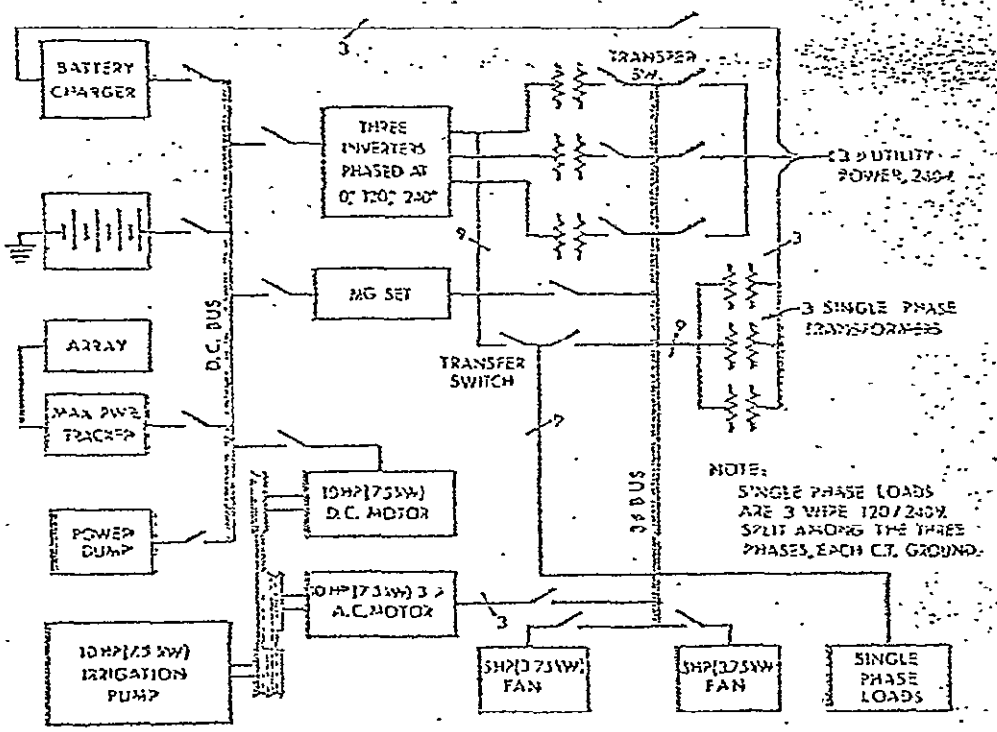

FIG. 2-17 Block diagram for Mead, Nebraska 25 KW photovoltaic systems. From Martin and Romaine [269].

8 KW LINE COMMUTATED INVERTER

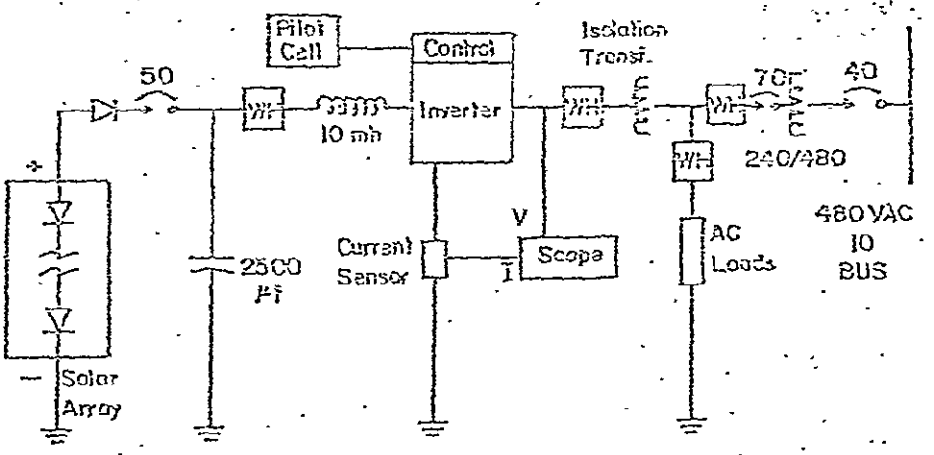

FIG. 2-13 Block diagram of 8 KW line commutated inverter evaluated by Pickerell [251].

BASIC CIRCUIT OF 3-PHASE BRIDGE NATURALLY (LINE) COMMUTATED CONVERTER

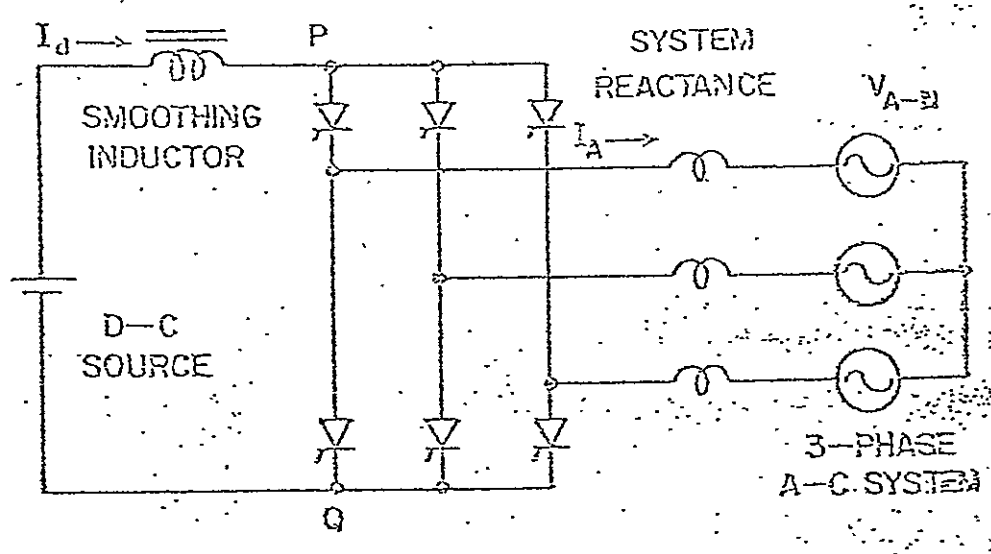

(a) INVERTER OPERATION

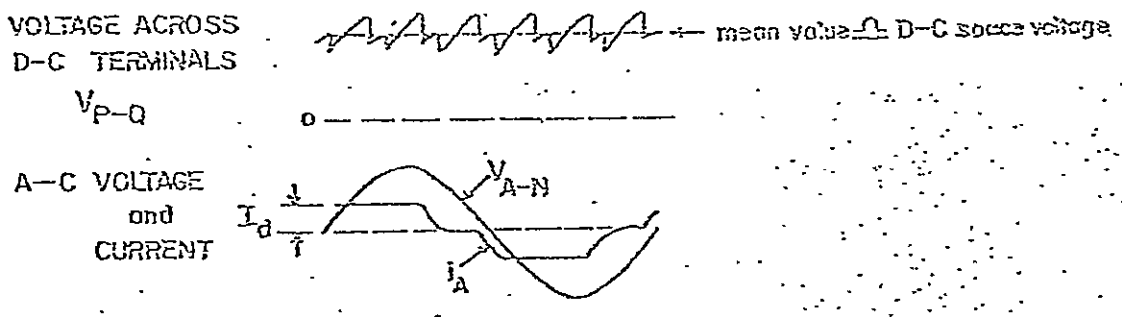

(b) RECTIFIER OPERATION

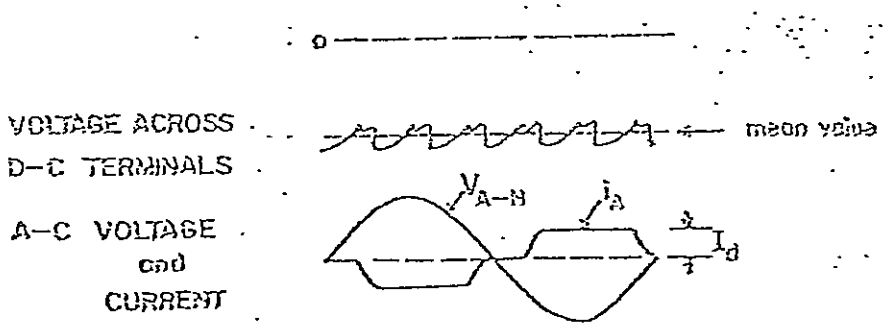

FIG. 2-14 Current-fed line commutated inverter. Circuitry for varying the thyristors' conduction periods is omitted. The basic waveforms for inverter and rectifier modes of operation are shown. From [255, p. 168, 169].

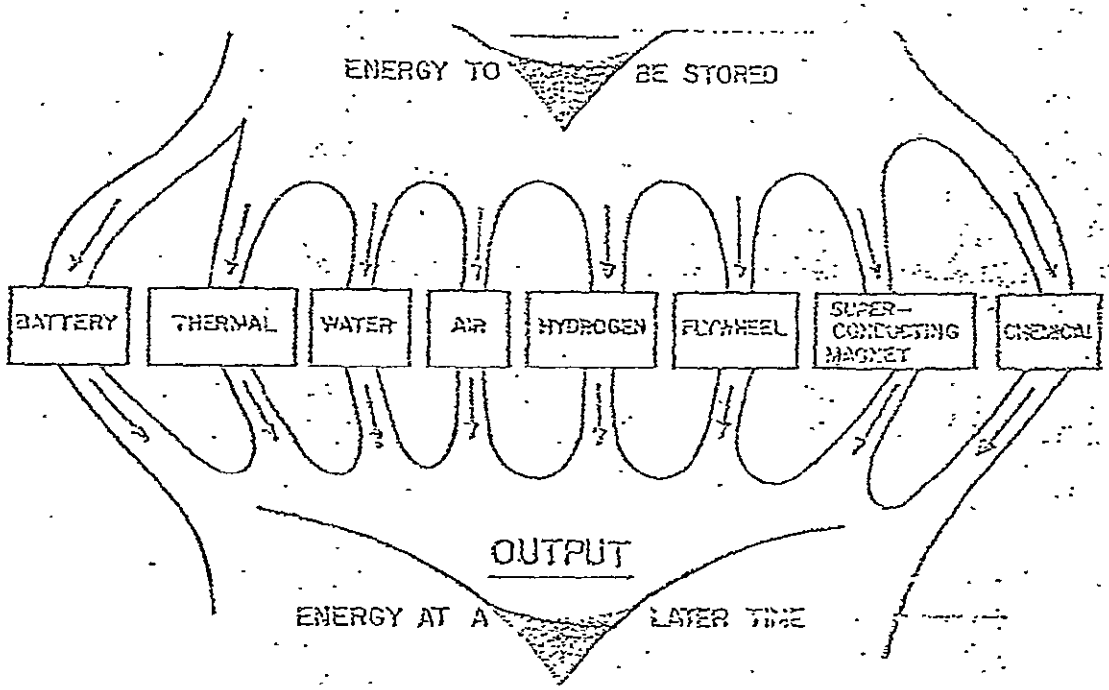

FIG. 4-1 Principal energy storage means most relevant to solar-electrics.

Another fundamental characteristic of a battery is shown in Fig. 4-3, the voltage vs time curve under the constraint of constant discharge current.

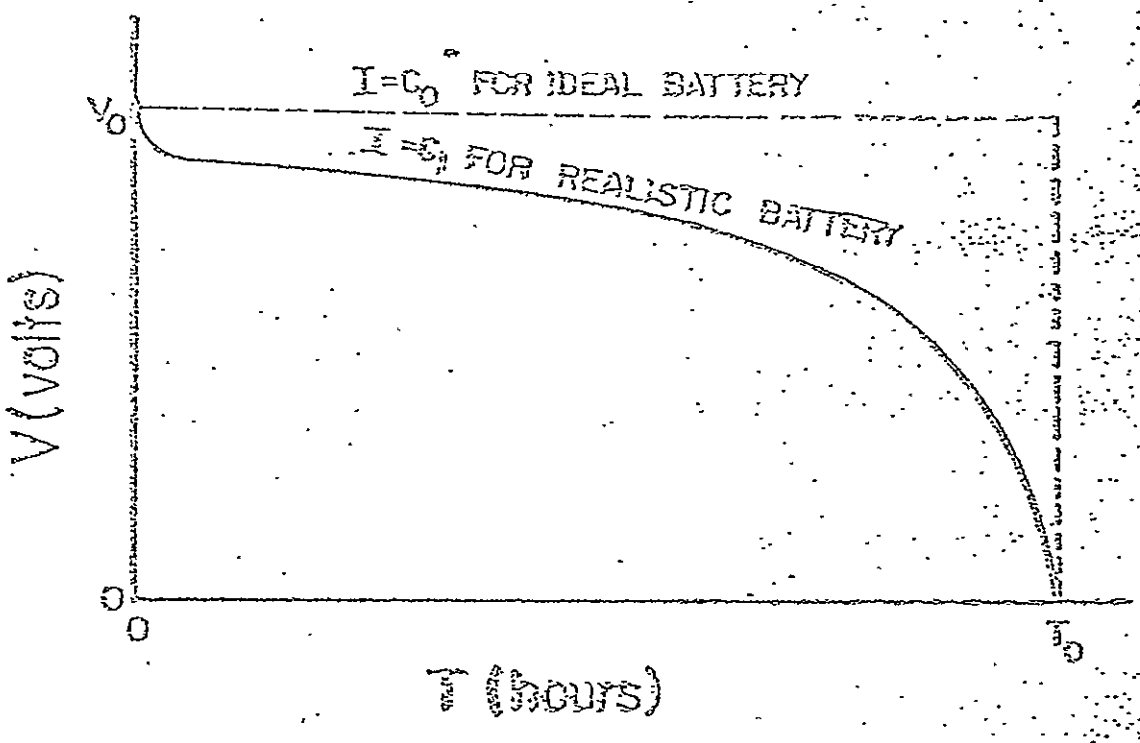

Fig. 4-3 The voltage vs time curve for a battery.

The electrical energy recovered is:

(4-4) Energy recovered $= \int_0^{T_o} I\, v(t)\,dt = I \int_0^{T_o} v(t)\,dt$

$= I \times$ area under curve (watt-hours)

For the 'ideal battery' shown maintaining a constant terminal voltage

(4-5) Energy recovered $= V_o\, I\, T_o = V_o \times$ "amp.-hour capacity".

In general each kind of battery has a different $V(t)$ curve. The curves are obtained generally for a constant discharge current. The curves are generally found experimentally. There may be marked differences in these curves for different kinds of batteries, e.g. a nickel-cadmium battery is well known for its very sudden exhaustion in contrast to the gradual fall-off shown in Fig. 4-3.

Some factors which may markedly affect both the I-V characteristic curve and the $V(t)$ curve include:

- Battery temperature. Low temperatures generally result in decreased battery performance and vice versa.
- Battery previous history.
- Whether it is used continuously or only part time.
- Battery environment, e.g. altitude, vibration, and other factors.

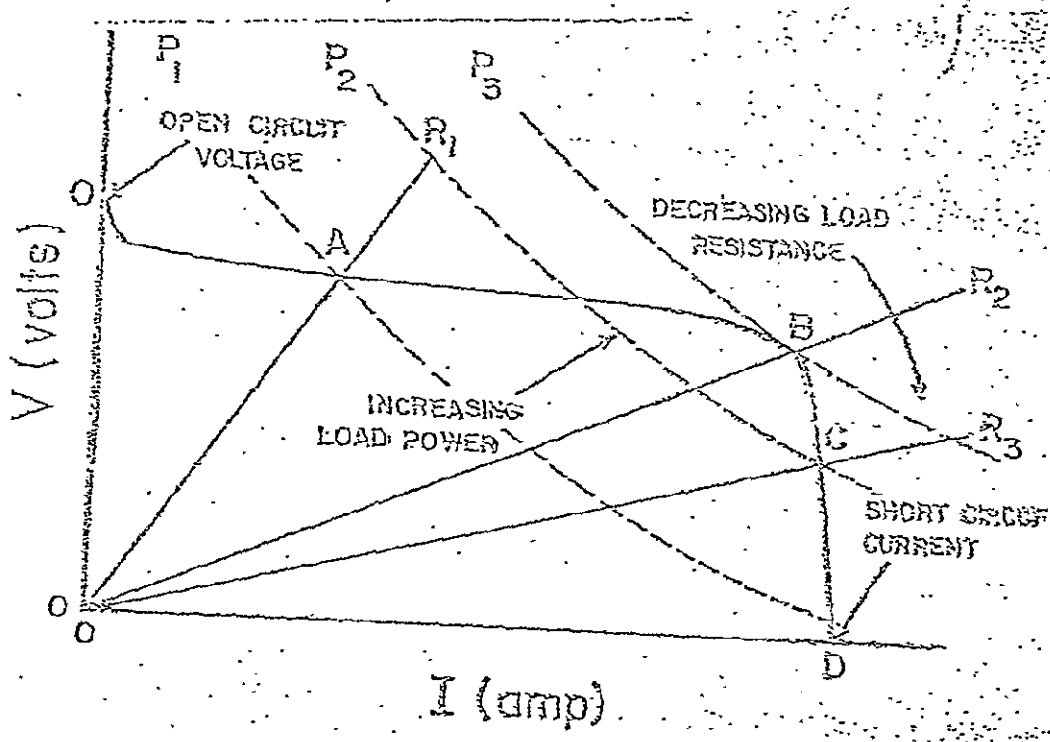

Fig. 4-2 The I-V characteristics of a generalized battery and its relationship to a DC load.