TRAINING IN ALTERNATIVE ENERGY TECHNOLOGIES

Solar Energy Laboratory

University of Florida

Gainesville

6600

Village Power For Water Pumping

by

Malcolm Whitfield, Sierra Leone
(Coordinator)

Satish Patel, India
Ghulam Rasul, Bangladesh

Bensalime Abdeslam, Morocco
Mathangila Kimeya, Zaire

TAET IV
December 1981

ACKNOWLEDGEMENT

The project group wishes to express their sincere gratitude to USAID for making possible this timely training in Alternative Energy Technology.

Our thanks also go to Dr. E.A. Farber and all the members of the TAET staff for their unrelenting guidance and cooperation.

CONTENTS

- Presentation of Options

- Modified Internal Combustion Engine

- System Evaluation

- Load Evaluation

- Conclusion

- Recommendations

ABSTRACT

This project, entitled Village Power for Water Pumping, proposes to relate Means (available materials, local energy sources, native technologies, etc.) to Ends (objectives such as pumping of water, grain milling and space lighting, etc.). It corresponds to a matching problem sensitive to location, where you are, and time, economic climate.

There can, consequently, never be one solution. So in this strategy to investigate the technically possible engineering systems the options are kept open.

The Gasifier-Engine system is selected here for closer study and experimental investigation with a view to develop and adapt its technology to pumping water by running a modified IC engine powering a standard pump with the gasifier's output, methane or carbon monoxide.

The scope of this work is, however, limited to the presentation of the options, detailed descriptions of modifications to be made to the fuel system of the gasoline engine (considered as one such option), specification of the required performance information and the methodology for load (pumping requirements) evaluation.

The foundation, on which our successors could build, is laid.

Pumping - The Options

Pumping action can be obtained by utilizing any of a wide variety of energy sources available in the village (see Figure 1) other than non-renewable and commercial energy such as petroleum products and natural gas.

The following alternative energy sources can be employed for pumping water for irrigation or for drinking purposes from underground water level, canals, ponds or rivers: Solar, Biomass, Wind, Geothermal, etc.

There are also various systems for transforming these energy sources into mechanical energy for pumping action (see Figure 1).

Choice of sources and system for a specific application (e.g. pumping) is dependent on a number of factors: the geographical location of the site (village), the levels of skills and available manpower, the technological capability, short/medium/long term considerations, money, etc. These factors can be collectively termed resources and your selection would be governed by their number and mix. This means that a system designed for a village in Zaire would be different than that of say a village in India where there might be higher level of skills, better attending production capacity and so on.

A summary of the options with respect to sources and system, is presented in Figure 1. This listing is by no means exhaustive but representative. No attempt is made at selection because this requires a case study of a particular village and an analysis of its resources (systems, sources, etc.) in terms of costs to find the best combination of parameters to accomplish the task of pumping -- an optimization problem. Instead an arbitrary selection of system, an internal combustion engine powering a standard pump and running on the output of a gasifier, is made.

Modified Internal Combustion, IC, Engine

An internal combustion engine can be considered as a synthesis of interrelated subsystems such as the mechanical, electrical and fuel syb-systems. For this engine to run on the output of a gasifier instead of gasoline, the fuel system would have to be modified, among other things.

To provide a basis for comparison, experiments must be run on the instrumented unmodified engine to obtain the following performance curves: brake horsepower vs. engine speed (rev/min) for various air/fuel ratios, torque (nm) vs engine speed for best air/fuel mix, specific fuel consumption (kg/bhp•hr) vs engine speed. These plots must then be repeated for the modified engine, in the biogas and woodgas mode.

A simple cylinder Sears engine, Model No. 143.714032, 3-1/2 HP, is being deployed for the research investigation. Two modifications are planned:

(a) fuel system modified for biogas

(b) fuel system modified for woodgas

For case (a) the carburetor is to be replaced by an adaptor fed by a biogas line regulated by a valve and an airline controlled by a butterfly valve. It is hoped that the sizing (diameter of fuel tubing) of this fuel system would be optimized by experimentation. The detailed diagram for this modification is shown in Figure 2.

For case (b) the detailed diagram of the modification necessary is shown in Figure 3. It is seen, Figure 4, that the woodgas is fed into the engine after processing (cooling and scrubbing of the gas). The details of one gasifier (down draft) are illustrated in Figure 5.

The design of the fuel system constitutes a complex pipe flow problem. However, by knowing the pressure drops, ΔP, flow rates, Q, and pipe lengths,

L, the size, D (diameter), of the fuel line can be calculated. It is worth noting here that the theoretical power output from the engine is the product of the mean effective pressure, P_m, the area, A, of the piston, the length, L, of stroke and the revs per second, e, of the engine. So it means that the power output is a function of mass, m, of fuel burning, P_m being a function of m, and therefore Q. Also this route to the solution of the problem should be able to handle any pumping requirement - IC engines can have ratings from a few HP to 1000 HP. Modifying them to burn other fuels will, it is anticipated, only cause a minor loss of performance.

System Evaluation

To monitor performance and to aid system analysis a number of variables need to be measured. They are specified by the various gauge readings in the above figures as temperatures, pressures, flow rates, lengths, etc.

Shaft power, for instance, is measured by employing the pony brake, shown in Figure 6. It is the product of the torque (Nm) and the speed of the shaft in rev/sec, (the torque being given by $\Sigma CWR + W_{bar}r$) with the symbols carrying the usual meanings.

Results to be obtained are plotted as illustrated below:

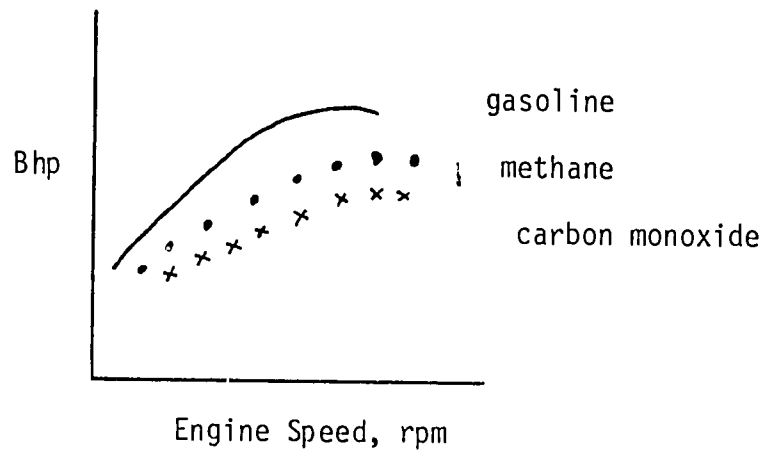

Similarly the other performance plots will have curves reflecting the fuel type and engine modification.

Conclusions in comparative terms can thus be made. No serious loss of performance is envisaged as a result of these different fuel types. It is hoped that by adjusting the variables in the system the optimum performance can be obtained.

Load Evaluation

The question arizes as to how to estimate the power requirements of the pumping action. This problem is sensitive to location (it would be different in arid regions, with an enormous total water requirement), crop types, method of irrigation, etc. Now for load estimation the following procedures are deemed necessary.

Determination of Irrigation Requirement - by crop

The number of acre feet of water required per day for irrigation of a given crop is the difference between the consumptive use (or evapotranspiration and water supplied by rainfall. Consumptive use (CU) is the depth of water, in inches, removed from a vegetated area by evaporation of intercepted water from plant surface, by development of plant tissue; and by transpiration from vegetable growth.

The total water requirements for any given crop and location can be estimated by applying a factor, η_{app}, the application efficiency. This factor takes into account the water applied to the soil <u>but</u> not consumed by the plant. Some of this water evaporates or is lost as a runoff; the remainder percolates downward until it is beyond the reach of the plant roots.

Accordingly, for each crop the maximum water requirement in acre feet (AF) per day is

$$(AF/day)_{\substack{at\ crop \\ peak}} = \frac{(CU)_{peak}\ \text{inches/day X Acres}}{12 \times \eta_{app}} \qquad (1)$$

Similarly

$$(AF)_{\substack{crop\ total \\ life}} = \frac{(CU)_{\substack{crop\ total \\ life}} \times \text{Acres}}{12 \times \eta_{app}} \qquad (2)$$

Determination of the Number (N) of Pumps and Required Shaft Horsepower

$GPM_{allowed}$ is the capacity of the aquifer (general term for any water source), in a given location.

For a constant pumping rate the peak flow rate for a particular crop is given by

$$GPM_{crop\ peak} = \frac{(AF/day)_{crop\ peak} \times 325851(Gal/AF)}{60 \times \text{hrs pumped per day}} \tag{3}$$

The hours pumped may be as many as 24 hours for a conventional power system. For solar power system the concept of sunshine hours must be introduced into the analysis.

The required number of pumps, N, is given by

$$\underset{\substack{\text{(Number of}\\ \text{water sources)}}}{N} = \frac{GPM_{crop\ peak}}{GPM_{(allowed\ per\ water\ source)}} \tag{4}$$

The pump shaft horsepower is calculated from

$$(HP/pump)_{shaft} = \frac{GPM_{(allowed)} \times Lift_{(total)}}{3960 \times \eta_p} \tag{5}$$

where

$$Lift_{(total)} = Lift_{(pump)} + Lift_{(application)} \tag{6}$$

and η_p is the pump efficiency factor.

The total shaft horsepower required for the crop is given by

$$(HP)_{shaft} = N \times (HP/pump)_{shaft} \tag{7}$$

Determination of Required Pumping Energy

The time the shaft horsepower applied per crop is:

$$\text{Crop pump time (sec)} = \frac{(AF)_{\substack{crop \\ life}} \text{ total} \times 325851(\text{Gal/AF}) \times 60}{GPM_{allowed} \times N} \tag{8}$$

The total energy required (in Btu) per crop is

$$E_{\substack{total \\ crop}} = 0.7067\ (\text{Btu/sec}) \times HP_{\substack{shaft \\ total}} \times \text{Crop Pump Time} \times \frac{1}{S} \tag{9}$$

(Irrigation Energy Requirement)

where $S = \sum_{i=1}^{\delta} \eta_i f_i$

η_i = energy efficiency of prime mover associated with the ith energy source

f_i = fraction of input energy from the ith energy source

The energy distribution for each type of energy is found simply by

$$E_i = E_{total} \times f_i \tag{10}$$

Conclusion

A methodology of approach to the problem of pumping water is presented.

Recommendations for Future Investigations

Preliminary efforts to acquire data, using the simple pony brake, failed. This is due to the severe heat generation due to friction at the pivot.

Attempts should, therefore, be made to reduce this heat by 'deburring', the key way to remove all the roughness or alternatively a new design be constructed to absorb the measured engine power.

Theoretical analysis and design of the fuel line must be attempted and the result verified experimentally.

Obtain other performance curves such as efficiency vs. torque. A complete technical evaluation of the engine running on the gasifier's output methane or carbon dioxide must be attempted.

VILLAGE ENERGY SOURCES

1. SOLAR
2. PLANTS AND ANIMAL WASTES
3. WOOD
4. WATER POWER
5. WIND

SYSTEMS

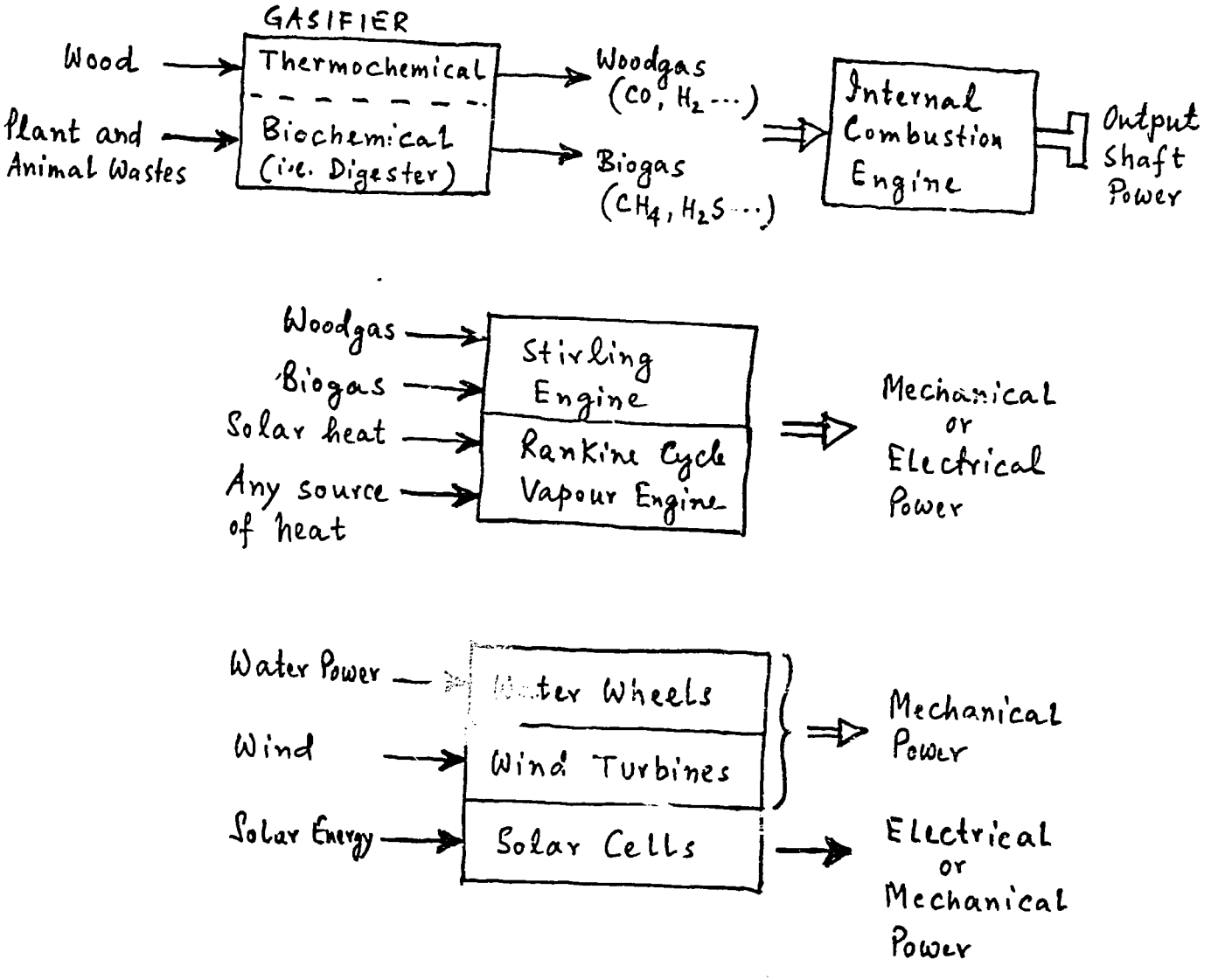

Figure 1

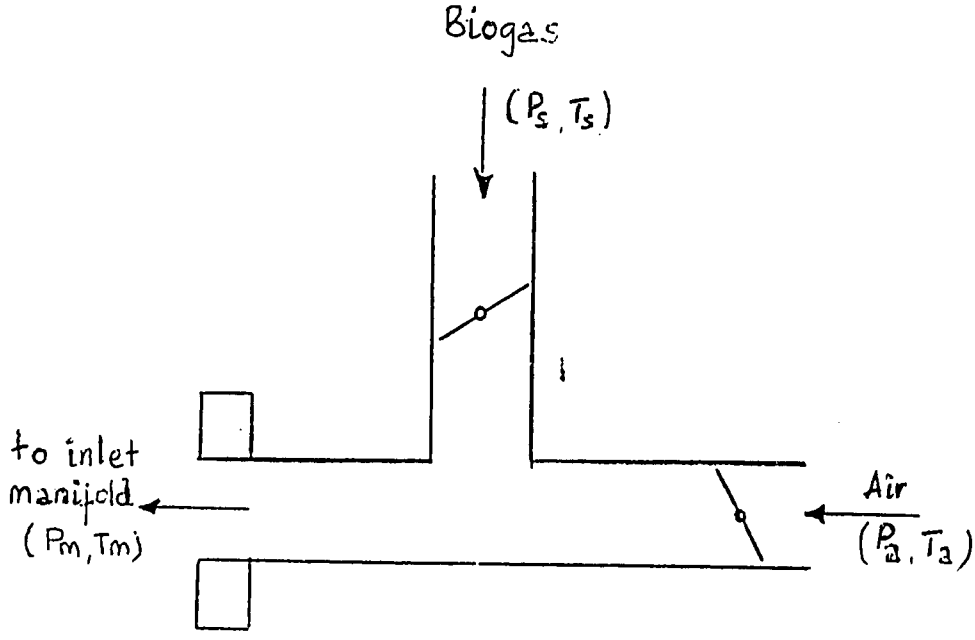

Fig. 2

Where P_s is biogas supply pressure
T_s is biogas supply temperature
P_a is inlet air pressure
T_a is inlet air temperature
P_m is inlet manifold pressure
T_m is inlet manifold temperature

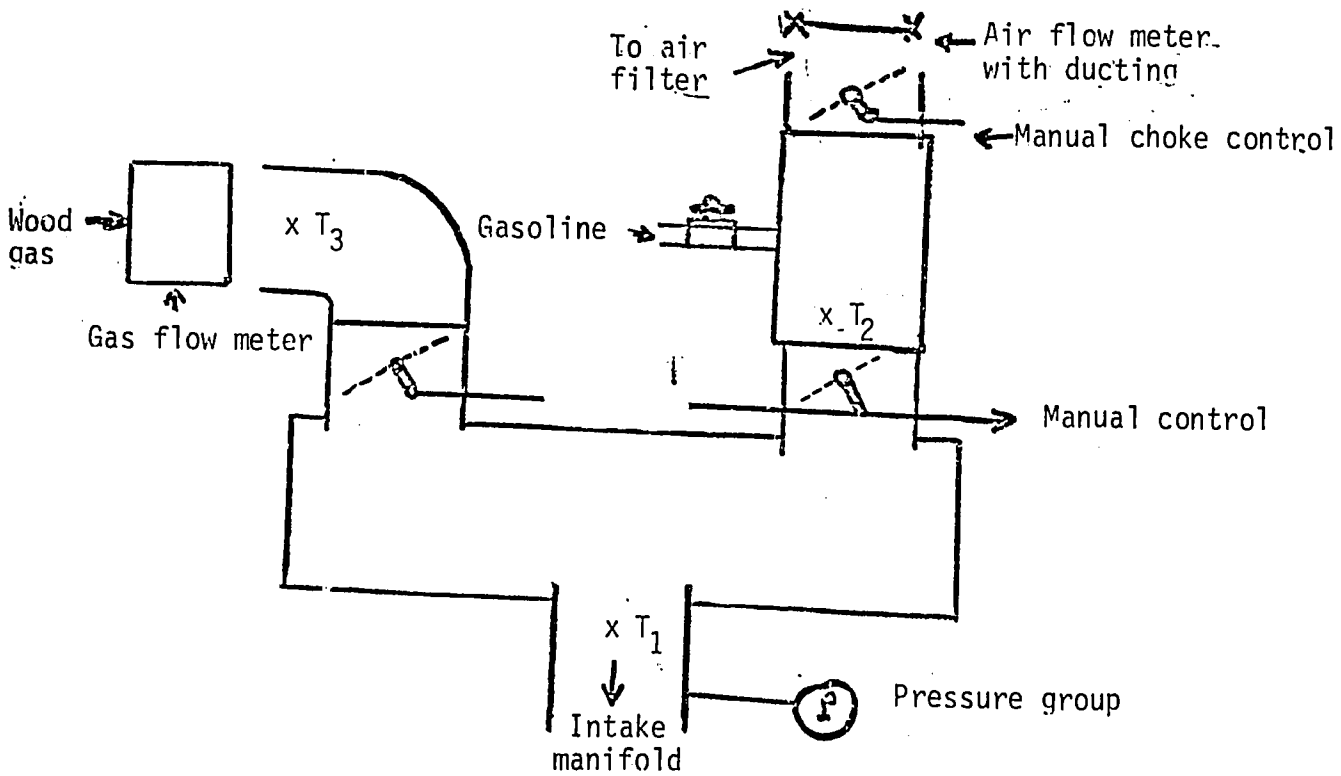

Fig. 3: Mixing Box

T_1 = inlet manifold t°

T_2 = inlet air t°

T_3 = inlet wood gas t°

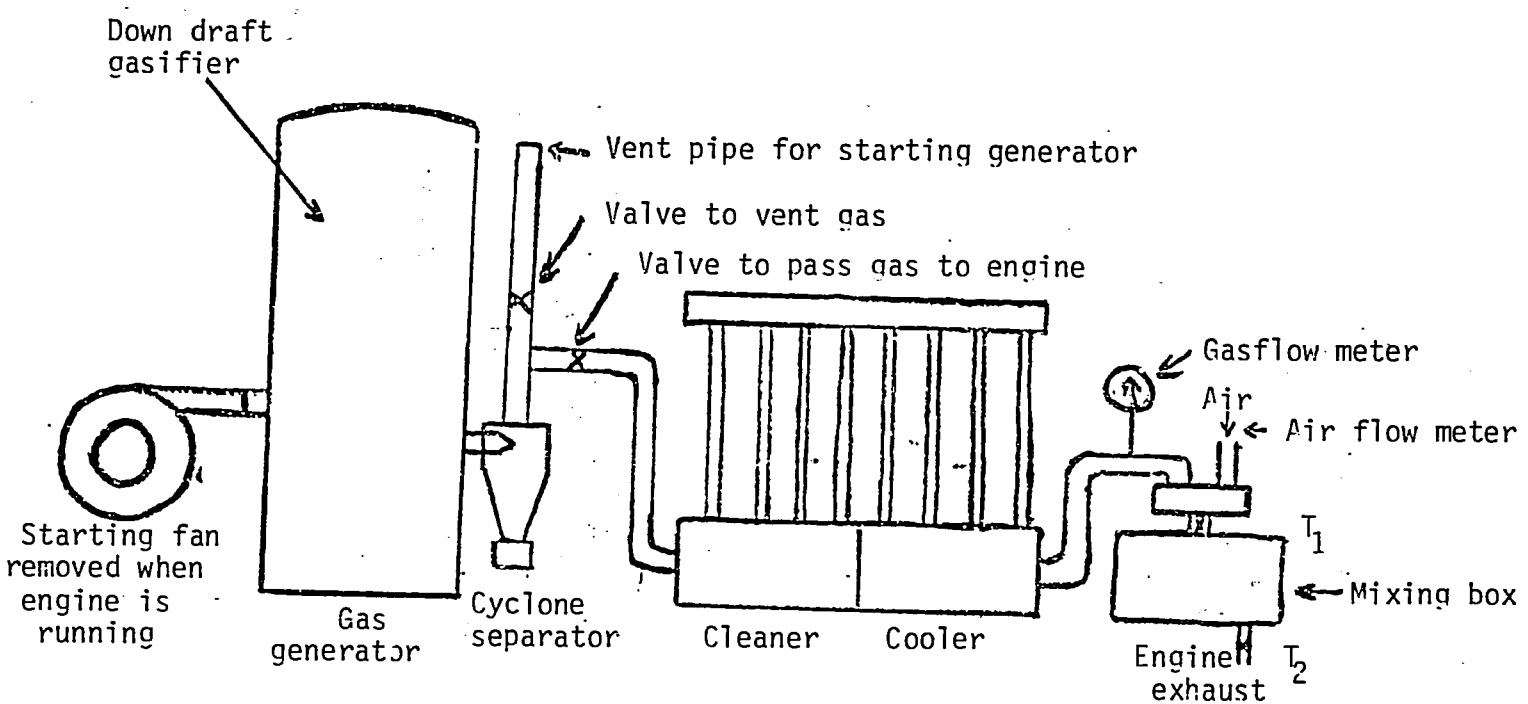

Fig. 4: Components of Wood Gas Generator System

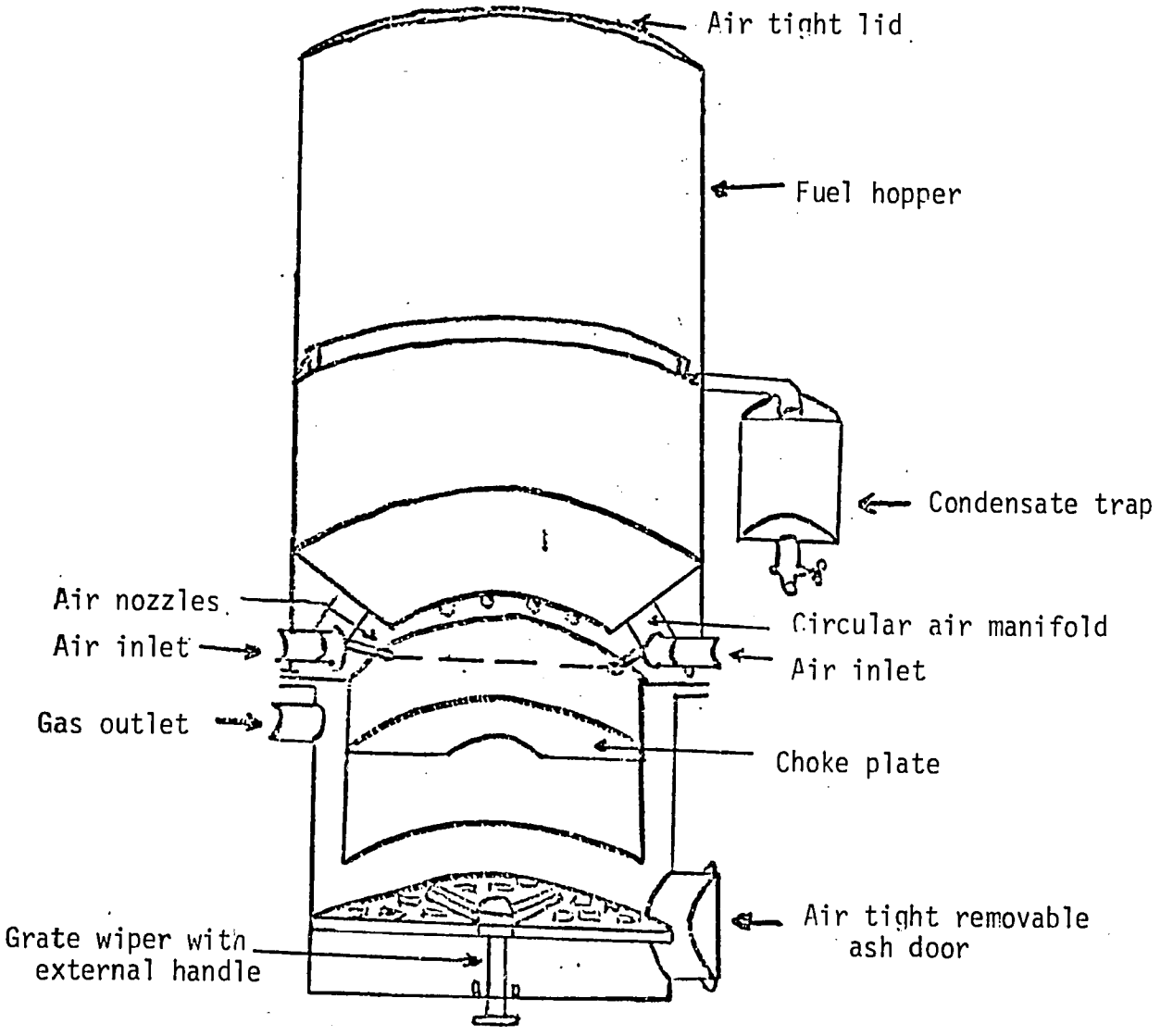

Fig. 5: Wood Gas Producer

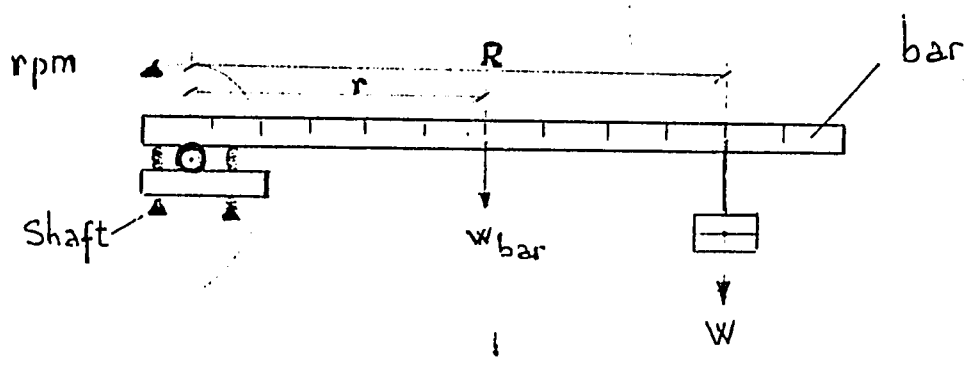

Fig: 6

$$T = \Sigma (WR + w_{bar} r)$$

$$\text{Power} = T\omega$$

W = known weight

w_{bar} = weight of bar