PN-AAU-574
ISN-45977

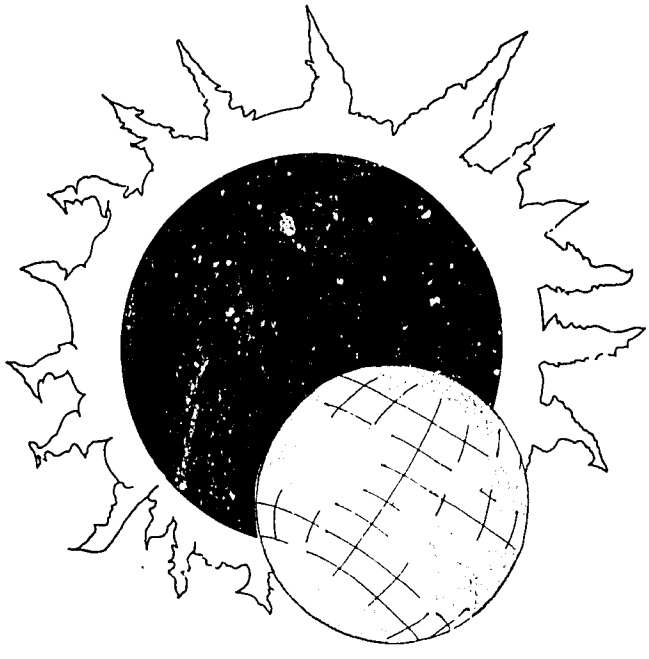

TRAINING IN ALTERNATIVE ENERGY TECHNOLOGIES

Solar Energy Laboratory

University of Florida

Gainesville

1450
6600

UNIVERSITY OF FLORIDA

TRAINING IN ALTERNATIVE ENERGY TECHNOLOGIES PROGRAM

SPONSORED BY

THE U.S. AGENCY FOR INTERNATIONAL DEVELOPMENT

(USAID)

2nd SESSION SEPT - DEC. 1980

" PHOTOVOLTAIC "

A GROUP PROJECT

BY

CHAYA JIVACATE

GYANI SHAKYA

CHEIKH MBOW

CARLYLE BOURNE

TRAINING IN ALTERNATIVE ENERGY
TECHNOLOGIES
SOLAR ENERGY LAB.
UNIVERSITY OF FLORIDA

TRAINING IN ALTERNATIVE ENERGY
TECHNOLOGIES
SOLAR ENERGY LAB.
UNIVERSITY OF FLORIDA

CONTENTS

ACKNOWLEDGEMENT	1
ABSTRACT	2
THEORETICAL BACKGROUND	3
EXPERIMENTAL RESULTS	18
CONCLUSION	50
REFERENCES	51

ACKNOWLEDGEMENT

We wish to express our sincere thanks to the " TAET " staff in kindly supporting us with documents, references, advices, lab. and admin. facilities and, above all, their encouragements and understandings which result in the completion of this project work.

We do appreciate the government of the United States of America through The Agency for International Development (AID) in granting us the sponsorship to participate in this program.

Also to be mentioned here is the voluntary effort of EGAT's Special Energy Division secretarial staff in graphic, typing and binding works of this report. Hopefully, this report will, somehow, have contribution in promoting the use of photovoltaic for the generation of electricity.

ABSTRACT

Solar cells and solar cell arrays, that is photovoltaic converters of solar energy into electricity are a reality. A theoretical background of the effect of light energy as photons on semi - conductor junctions as solar cell introduces this study.

Experiments were conducted in the laboratory on Silicon solar cells individually and as modules, for the selection of matching solar cells and to determine the effects of light intensities from artificial sources and sunlight on electrical characteristics including voltage,current, and equivalent internal resistance.

Additionally, the effectiveness of batteries to extract the maximum power from a module was examined over a range of light intensities. Also the shadow effect and subsequent cell damage was demonstrated in relation to cell efficiency.

The results indicated good correlation between experimental and theoretical values for solar cell phenomena.

PHOTOVOLTAIC CONVERSION USING SOLAR CELLS

Photovoltaic conversion is the process by which electricity is directly produced from light energy (photon). The devices used for such purpose are called solar cells.

Solar cells are basically made by junctions of semiconductors differently doped (P and N). When the semiconductors are from the same material the junction is homojuction, and heterojunction when they are from different materials. The energy band structures for a homojunction and heterojunction are illustrated in Fig.1

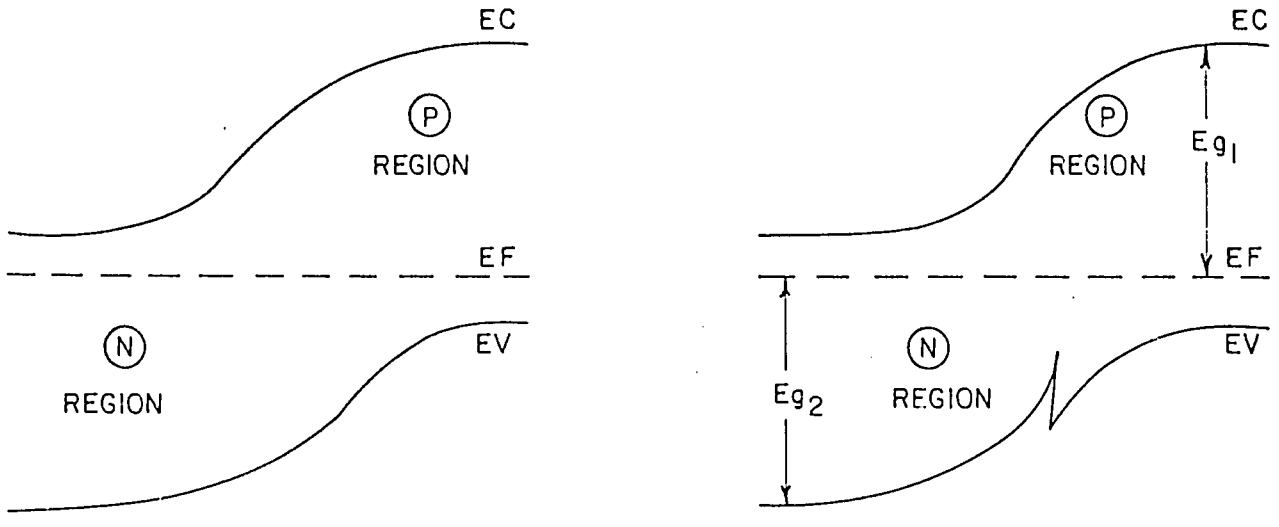

Fig 1 The energy band structure for

a) Homojunction and b) Heterojunction

In which Ec. Ef. and Ev. are the conduction band, the Fermilevel and the valence band respectively.

One important parameter of a semiconductor is the energy gap which is the energetical difference between the minimum of the conduction band and the maximum of the valence band. In homojunctions the gap is the same all over the material and in heterojunctions the gap in the P region is different from that of the N region. All the photons of light whose energies are higher or equal to the gap are absorbed and are responsible for the creation of the hole electron pairs of the device.

The location of photon absorbtion is governed by the absorbtion coefficient, α , of the material. The magnitude of which depends on the physical structure of the material, the density of state in the conduction and the valence band, the direct and indirect nature of the band gap, and on the photon wavelength.

By connecting a load across the terminals of a solar cell, a current IL can flow through the load and develops a voltage drop V_L

The simplified equivalent circuit for a solar cell looks like as shown in Fig.2

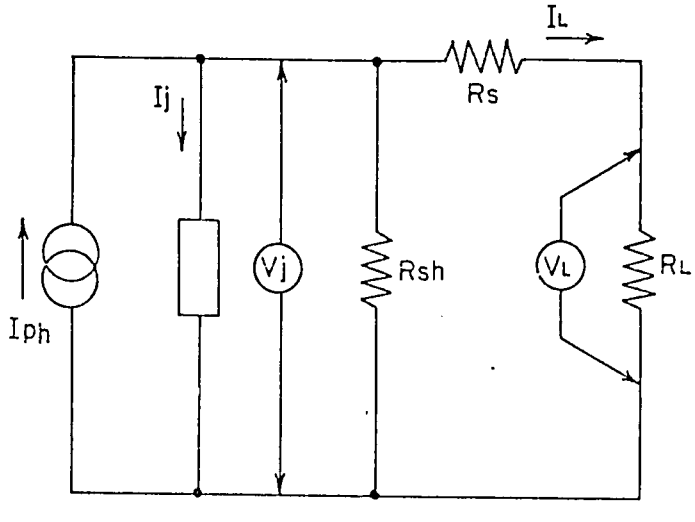

$$IL\left(1+\frac{Rs}{Rsh}\right) = Iph - Ij - VL/Rsh$$

$$= Iph - Io\left[C^{\beta q}(Vj - ILRs)_{-1}\right] - VL/Rsh$$

Fig 2. The simplified equivalent circuit for a solar cell

Vj is the voltage drop across the junction region of the diode, due to either optical or electrical biassing. Rs and Rsh are the series resistance due to the material and associated shunt resistance respectively. For an ideal solar cell, Rs = 0 and Rsh = ∞. The corresponding V-I characteristics looks like the following illustration

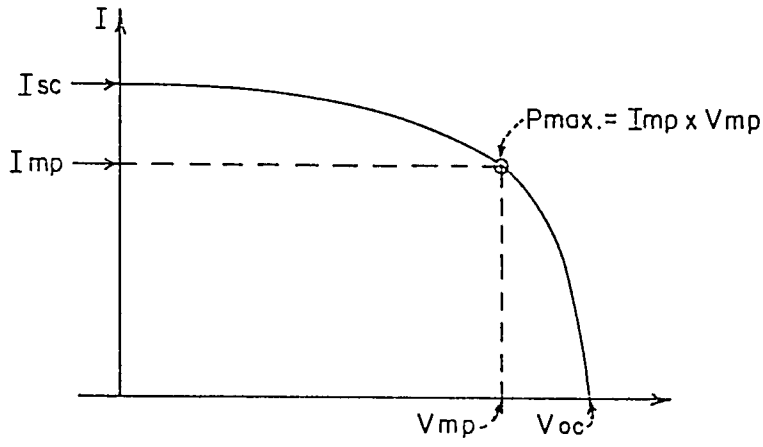

Where the open circuit voltage is give by :

$$Voc = \frac{KT}{q} \ln \left[\frac{Isc + Io}{Io} \right]$$

Fig 3. Typical V - I characteristics of a solar cell

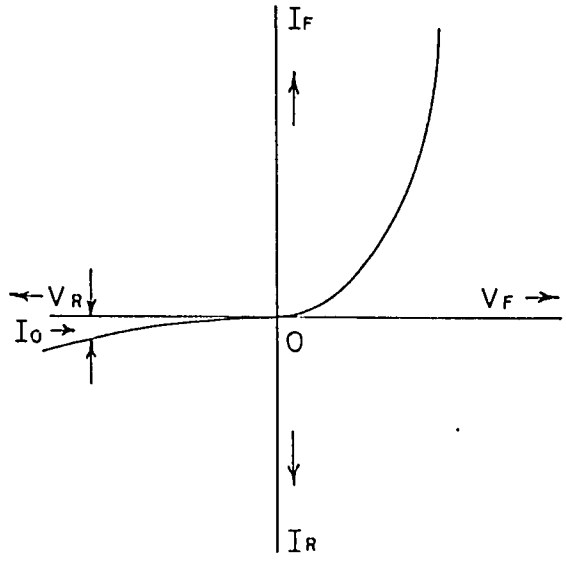

Io is the saturation or dark current which is obtained when a large negative voltage (reverse voltage-VR) is applied across the diode.

Fig 4. Typical V - I characteristics of a semiconductor diode.

The point Pmax on the V-I curve represent the maximum power point.

If Psun is the total power density of the sunlight, the efficiency of the cell

$$\eta = \frac{Imp \times Vmp}{Psun}$$

$$= \frac{Isc \times Eg}{q \times Psun} \times \frac{Imp \times Vmp}{Isc \times Voc} \times \frac{q \times Voe}{Eg}$$

The term $\frac{Imp \times Vmp}{Isc \times Voc}$ is called the fill factor " FF " and $\frac{q \times Voc}{Eg}$ is the voltage factor.

The fill factor is used as a measure of how well a junction is made in a cell and how low is the series resistance. The voltage factor is determined by the basic properties of the materials in the cell.

Physical Parameters of the System

Cell diameter 3" discharge profile

Ns = Number of cells in series

Np = Number of cells in parallel

Nt = Total number of cells on the array

Vc = Cell output voltage

Va = Array output voltage

Ic = Cell output current capability

Ia = Array output current capability

Pc = Cell output power capability

Pa = Array output power capability

Va = Ns Vc

Ia = Np Ic

Pa = NT Pc

Pa = Va Ia

Pc = Vc Ic

Nt = Ns Np

$$NS = \frac{VB + Vd + Vw}{Vmp}$$, Where = VB = Battery bus voltage

Vd = Blocking diode forward voltage drop

Vw = Total wiring voltage drop between the solar array and the load or battery both in the "go" and "return" wires.

Vmp = solar cell end of mission (or other mission critical events) degraded output voltage at the cells maximum power point and under operating temperature and intensity ($VB \simeq 0.7$ V for silicon diodes)

$$Np = \frac{IL}{ImPaV}$$, Where ImPaV = Average maximum power point current output of all Np cells in Parallel after ..... and degrading, at the operating temperature.

SAFE OPERATING AREA*

As with other semiconductor devices it is possible to defined for solar cells and panels an area bounded by the combined device characteristics and operating characteristics within which the devices can be safely operated. Outside the boundary of this safe operating area (SOAR), operation may damage or destroy the devices.

---

*Philips Technical Information 052 PP 6 - 9

To define the SOAR, the absolute maximum ratings for the individual cells and panels and the worst case operating conditions must be known. As usual, the most important parameter is temperature.

The junction temperature of an individual cell can be quite high before its structure is damaged. The junction temperature, however, is not the limiting factor in the case of a solar panel. If the temperature of a cell exceeds 85°C in case of silicone potting material or differs greatly from that of its neighbours, the silicone resin potting material may be strained or partially decomposed. Thermally induced strains may cause the resin to part from the sensitive surface of cells and decomposition will discolour the resin. Both result in attenuation of the light reaching the cell, thermal strain increasing reflection, and discolouration increasing absorbtion. Both phenomena are irreversible.

An otherwise normal cell will heat up when current is forced through it causing a reverse voltage across it (output voltage becomes negative). This will happen when one cell in an irradiated panel is put partially in to shadow. A partially shadowed cell is subject to maximum dissipation when :

- It is part of a series connected chain of irradiated cells in a short circuited panel, or array of panels.
- It is in a panel connected in parallel with other panels but with no load.

The SOAR must be determined so that a partially shadowed cells is protected under both circumstances.

Short - Circuit Series Connection

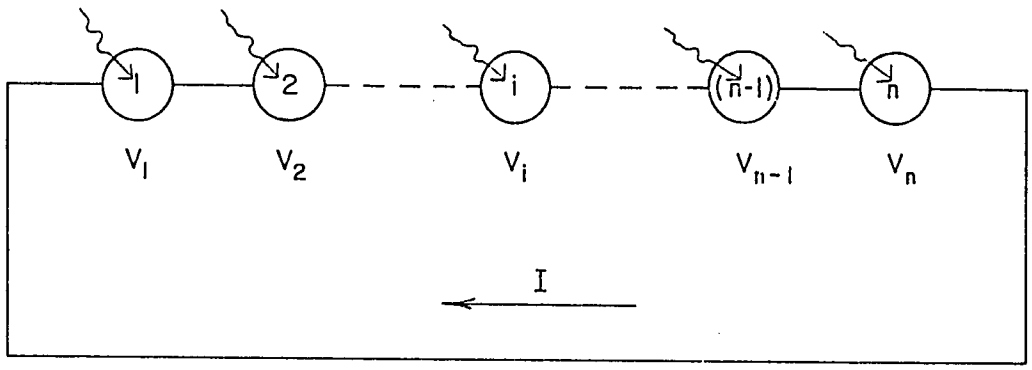

Fig 5. Solar cells in series connection

The operation of n cells in series into a short circuit is shown above. The total voltage Vt is given by :

$$VT = \sum_{i=1}^{n} Vi = 0$$

A current I, which is proportional to the irradiance, flows through the cells. Since the internal resistance of the cells can be ignored, the dissipation in cell i will be Pi = Vi I. Assuming that the cells are identical and equally irradiated.

$$Vi = \frac{VT}{n} = 0$$

and the dissipation in the cell i will therefore be zero

These ideal circumstances, however, seldom apply. If a given cell produces a short circuit current Isc > I, then Vi > 0. If Isc < I, then Vi < 0

this occurs when a cell is partly shadowed. Thus, when $Vi < 0$ (voltage inversion) $Pi > 0$ and the cell will heat up.

The condition $Vi > 0$ can not lead to overheating. In the worst case when all cells except one are in shadow, the cell being irradiated will be unable to force a significant current through the shadowed cells.

It is essential, however, that the system is protected against the condition when $Vi < 0$, which is most severe when one cell only is partially shadowed. This condition is analysed using Fig.6 in which the right hand curves are the voltage-current characteristics of 33 and 34 cells respectively from a Philips's BPX 47A panel, and the left hand curves are the reverse characteristics of a single cell (from the same panel) under varying degrees of shadowing. The reverse characteristic passing through the origin is for the cell completely shadowed. Note that in accordance with the convention normally adopted for solar cells the currents are shown positive.

The combined voltages of the 33 irradiated cells will force current through the shadowed cell, producing a reverse voltage across it. The current through the cell, and the power dissipated, depends on the degree of shadowing. In a completely shadowed cell, the maximum allowable current for a BPX 47A panel is 120mA at $V_R = 17V$ and the dissipation is 2.04W.

If now the amount of irradiation falling on the shadowed cell is increased, the current passing through it will increase and so will the dissipation. With the others 33 cells receiving an insolation of 1 KW/m^2, V_F 33 = 13.5V and I = 670mA. Thus, if the shadowed cell is irradiated to a level where it is capable of supplying 570mA, an extra 100mA will be driven through it by the other cells, resulting in a dissipation of 9W. (13.5 x 0.67). This exceeds the maximum

permissible dissipation for one cell which is taken to be the power received at an insolation of 1 KW/m^2. In a BPX 47A panel, each cell has an area of 26 cm^2 and at 1 KW/m^2 receives a maximum of 2.6W which is a safe value. This power curve is shown in the previous illustration (note that if more than one cells is shadowed the voltage produced by the irradiated cells will be divided among them and consequently the power will be reduced and the dissipation will be less)

A way must therefore be found for limiting the dissipation in a shadowed cell. One obvious method is to shunt each cell with a protection diode. This, however is a rather expensive solution. A better solution is to ensure that the panel is always in parallel with a voltage source thus reducing the voltage available to drive current through shadowed cells.

When solar panels are used to charge a secondary battery, some degree of protection is automatically provided, the accumulator acting as an effective voltage source. Complete protection requires a certain minimum battery voltage Vb which depends on the insolation and the degree of shadowing of a cell. When a maximum insolation of 1 KW/m^2 is available, the worst-case condition will occur for the power and voltage available at this value. Only the degree of shadowing therefore needs to be considered.

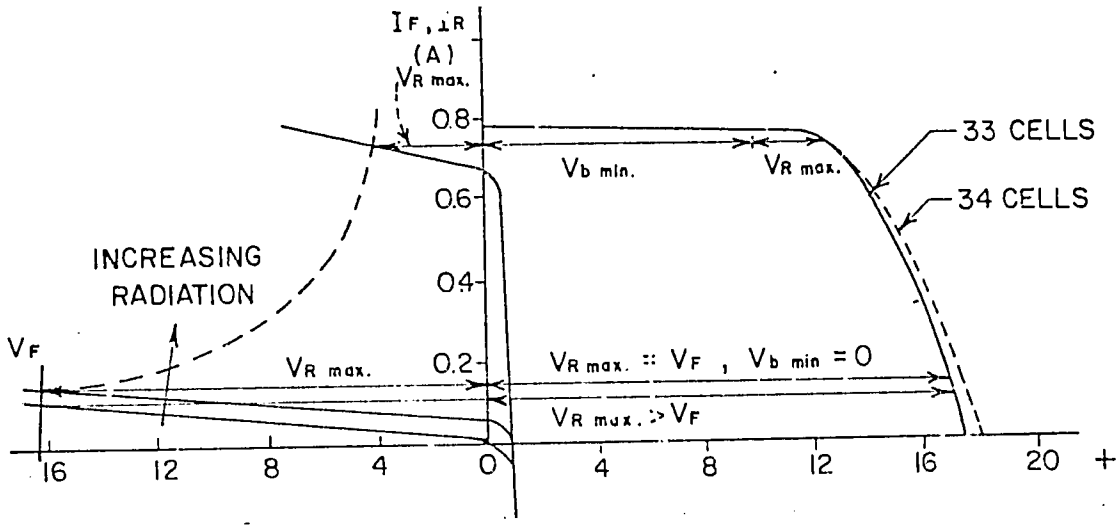

Fig 6. Generating characteristics of 33 and 34 cells in a BP x 47A panel and the reverse characteristics of a single cell from the same panel.

In the example given earlier where I = 670 mA, VR must be reduced to 2.6/0.67 or 3.9V, to avoid excess dissipation. This means that Vb needs to be at least 13.5 - 3.9 = 9.6V (see Fig.6). Obviously when I <154 mA, P <16.9 x 0.154 = 2.6 W and no voltage source is required. By constructing intermediate Vb point on Fig.6 the curve for Vb min shown in Fig.7 can be derived. The SOAR lies between the panel characteristics and this Vb min. curve.

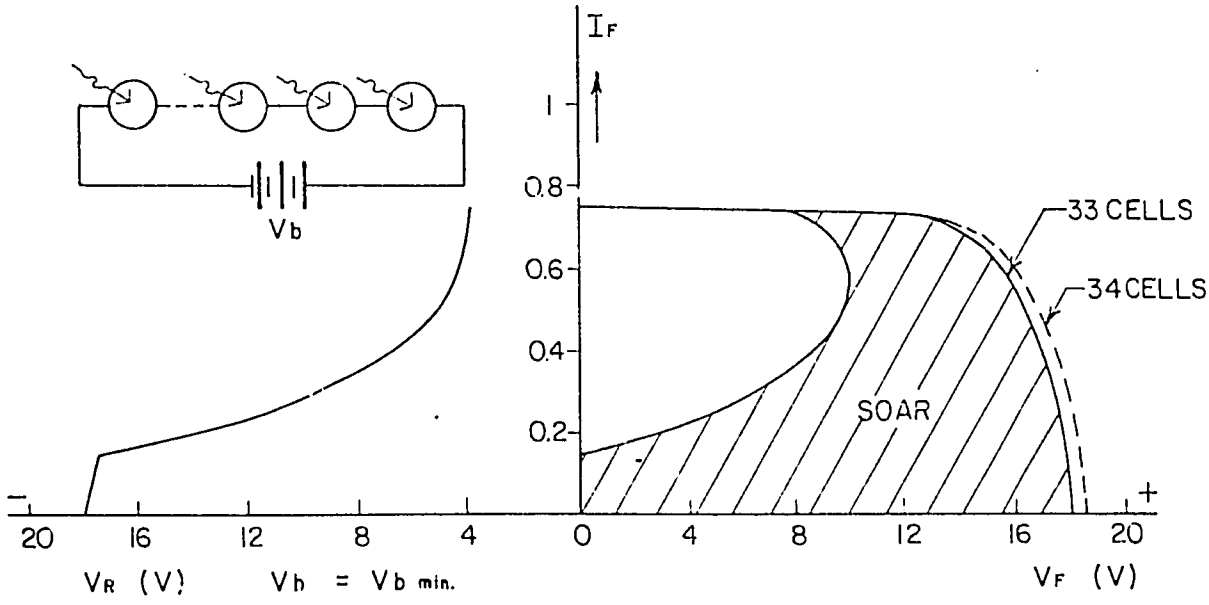

Fig 7. SOAR for a BP x 47A solar panel at an insolation of 1 KW/m^2

From Fig.7 it is clear that where Vb > 10V damage can not OCCUR for any shadowed arrangement. Where the number of panels are connected in series, a protection diode must be connected across each panel.

Open Circuit Parallel Connection

When two panels connected in parallel with no load receive differing levels of insolation, the panel receiving the lower level will be driven in to the forward quadrants of a BPX 47A panel. Where one panel receives 500 W/m^2 and the other 1 KW/m^2, the operation will lie on the intersection of line A with the relevant characteristics. The voltage across the panels are, of course, equal and the currents through the panel are also equal but of opposite sign.

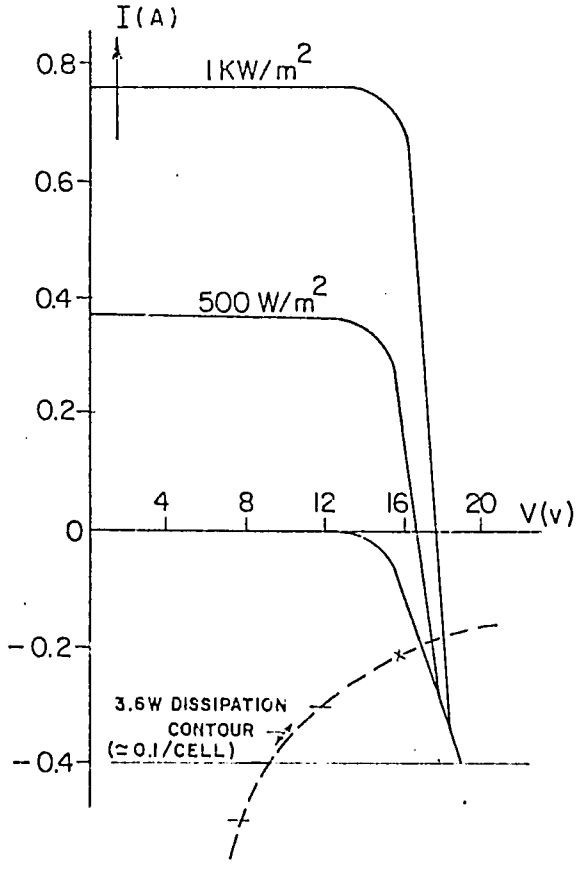

Where one of many panels in parallel receives 500 W/m^2 and the rest 1 KW/m^2, the current will be higher. In the worst case, all energy produced by the panels received 1 KW/m^2 will be dissipated in the panel receiving only 500 W/m^2. This dissipation will be equally divided over all 34 cells. Therefore, the temperature rise is limited and allows shunting of 12 solar panels.

Fig 8. Generating and diode forward characteristics, showing the effect of unequal insolation on parallel operation.

Panels in series/parallel

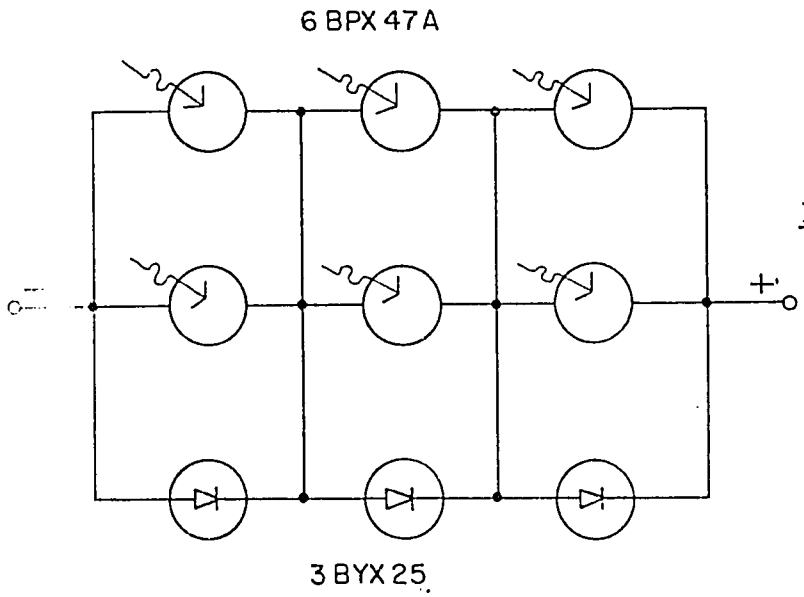

Fig.9 Matrix of 6 BPx 47A panels protected by three BYX 25 rectifier diodes

An array of n panels in series by m panels in parallel requires only n protection diodes. However, the array must be connected as a matrix, as shown in the example of Fig.9 where n = 3 and m = 2. Further information is given in the published data for the BPX 47A panel. With such an arrangement, panels can not be damaged by excess dissipation, although a series voltage source is still neccessary to protect individual cells.

Electrical Terminology

1. Polarity

- The polarity of output voltage of an illuminated solar cell is such that the P - contact > 0 and N contact < 0

- An illuminated solar cell connected to a load and delivering power is said to operate in its forward mode.

- A solar cell, illuminated or not, is said to be biased in its

forward direction by an external source when the positive terminal of the source is connected to the cell's N contact and the negative terminal to the P contact.

- A solar cell illuminated or not, is said to be biased in reverse by an external source when the positive terminal of the source is connected to the cell's N contact and the negative terminal to the P contact.

2. V - I Characteristics

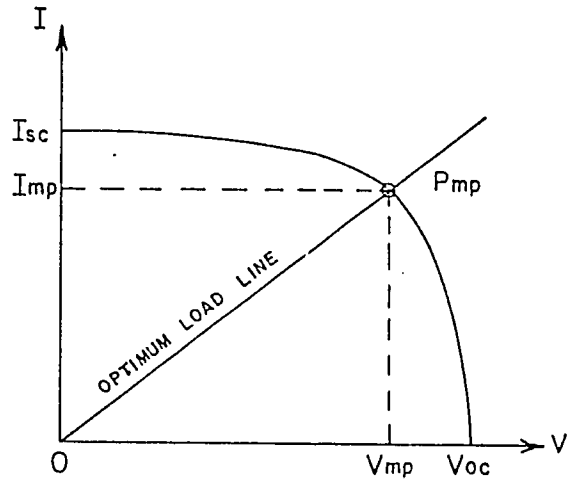

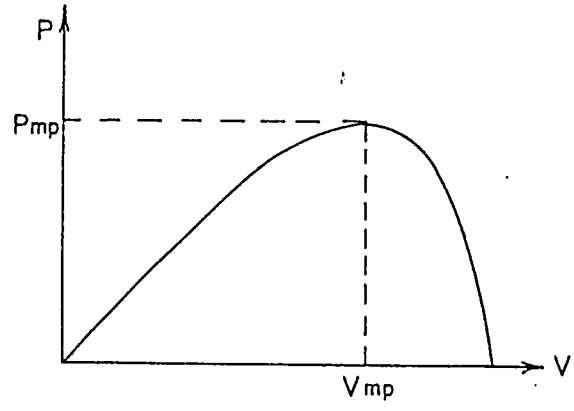

3. Series resistance

Rs. the idealization of internal dissipative electrical losses which can be deduced to occur in the cell by observing its terminal behaviour.

4. Shunt resistance

A portion of the electrical energy generated inside the solar cell is lost through internal solar cell leakage. The effects of all leaking paths are

conceptually combined for array design engineering in the so-called shunt resistance Rsh.

5. Energy conversion efficiency

$$\eta = \frac{Pout}{Pin} = \frac{Pout}{Pin \times Ac}$$

Where Ac = Active Solar Cell area

6. Fill factor

$$FF = \frac{Vmp \times Imp}{Voc \times Isc} = \frac{Pmp}{Vpc \times Isc}$$

(Sharpness of the V - I characteristics)

FF is usually in the range of 0.75 to 0.80

7. Optical characteristics

Spectral response cell output relative to constant energy input at all wavelengths.

EXPERIMENTAL RESULTS

Experiment No.1 To demonstrate a simple method to select a matched pair silicon solar cells

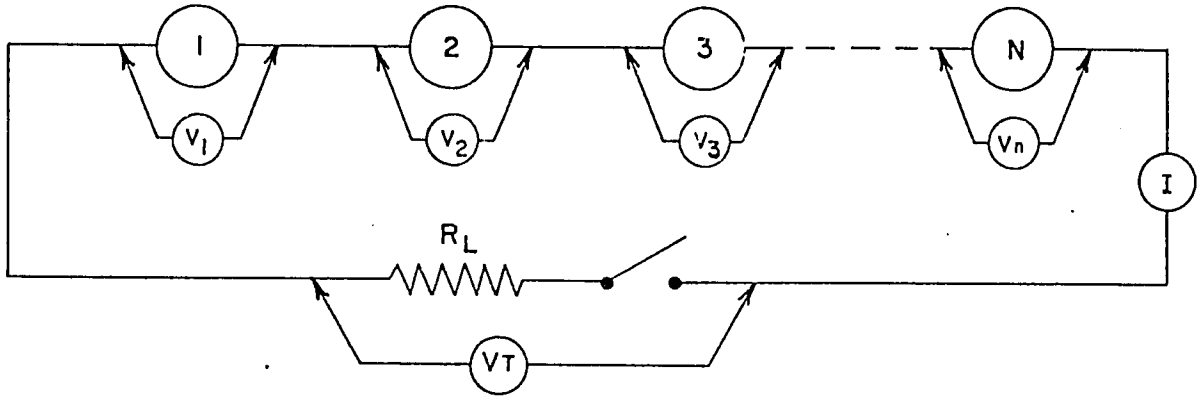

Equipment/components used

- 6 Solarex 8 cmØ cells
- 1 Color tran photo lamp model 650
- 1 FLUKE Digital Multimeter model 8024A
- 1 Dodge Products Solar meter model 776
- 2 1 Ohm wire wound resistors 5-10W rating
- 1 0.06 Ohm shunt resistors
  (made from #24 SWG insulated copper wire)
- 1 8 position barrier strip

Procedure

Four of the six solarex cells are selected by visual inspection. The selected cells are then neatly and temporarily taped to a transparent plexi glass plate ($\simeq$24 x 24 cm^2) in a square pattern (2 x 2) in order that they can be

simultaneously and uniformly exposed under any light source. The panel is temporarily back packed with a sponge like material to minimize any possible shock or vibration to the cells.

All of these time consuming efforts are considered justisfied in order to preserve the cells in their original physical conditions as much as possible so that they can be reused many times more. Wires from each cell are orderly connected to the barrier strip for ease of measurement and flexibility. Also attached to each cell at back sides is the T-type thermocouple with extension wires so that temperature monitoring can be made if needed.

From the four visually selected cells they are electrically selected in order to obtain a matched pair cells which are needed for our experiment.

One of the simplest method to select for an electrically matched pair is to have them connected in series and then measure the open circuit voltage, short circuit current loaded circuit voltage drop etc. A uniformaly distributed light intensity is required for this purpose.

MEASURING RESULTS WITH PHOTOLAMP (Color tran 650)

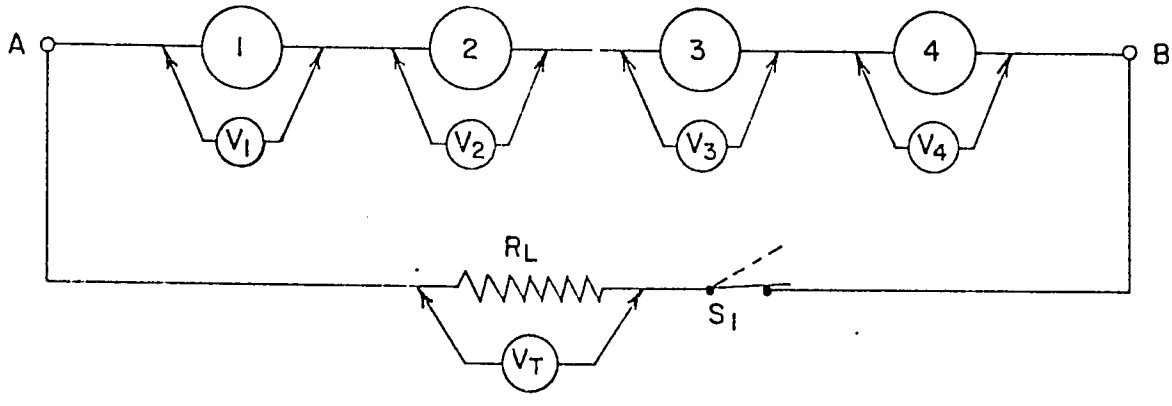

INSOLATION & LOAD CONDITIONS	V_t	V_1	V_2	V_3	V_4	
OC at $\simeq$ 250 W/m^2	1.71	0.42	0.44	0.43	0.42	Volt
SC at $\simeq$ 250 W/m^2	22	34	-22	113	99	mVolts
OC at $\simeq$ 500 W/m^2	1.87	0.47	0.48	0.46	0.47	Volt
SC at $\simeq$ 500 W/m^2	38	94	25	77	131	mVolts
OC at $\simeq$ 750 W/m^2	1.97	0.50	0.50	0.47	0.49	Volt
SC at $\simeq$ 750 W/m^2	55	+105	-179	+35	+104	mVolts
2 Ω at $\simeq$ 500 W/m^2	0.99	0.23	0.18	0.33	0.26	Volt
2 Ω at $\simeq$ 250 W/m^2	0.67	0.15	0.02	0.30	0.21	Volt

OC = Open circuited voltage - S_1 is opened

SC = Short circuited voltage - connect A to B with 0.06 Ohm.

W/m^2 = Watts per square meter - level of insolation

From the above results it is rather obvious, in particular at higher light intensity, that cell No.1 and cell No.4 are the best matched pair. They are then chosen for further experiments.

ADDITIONAL MEASURING RESULTS WITH REAL SUN (11-24-80, 14.30 - 16.30)

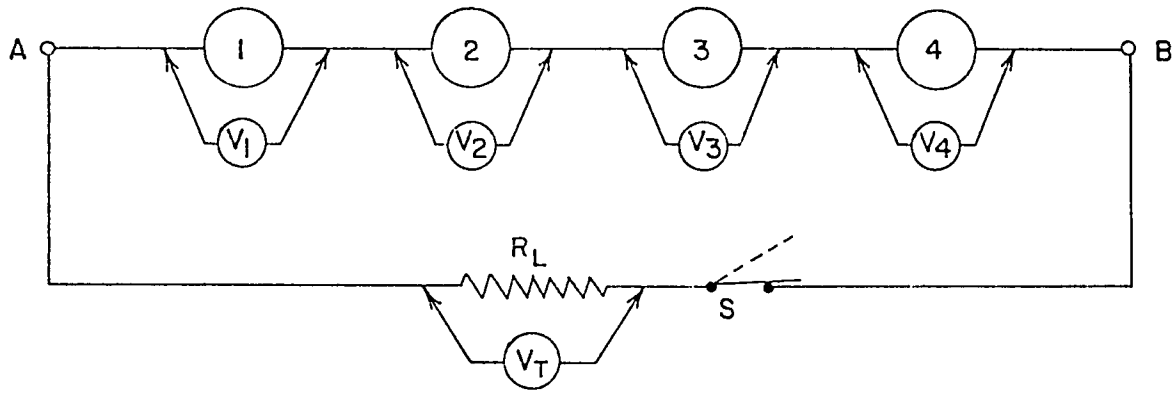

INSOLATION & LOAD CONDITIONS	V_t	V_1	V_2	V_3	V_4	
OC at $\simeq$ 900 W/m^2	2.04	0.52	0.49	0.49	0.51	Volt
2 Ω at $\simeq$ 900 W/m^2	1.38	0.35	0.35	0.36	0.32	Volt
OC at $\simeq$ 850 W/m^2	2.02	0.51	0.51	0.49	0.50	Volt
SC at 850-900 W/m^2	79.2	-6.5	-31.5	+138	-2.4	mVolt
2 Ω at 750-800 W/m^2	1.25	0.39	0.31	0.32	0.29	Volt
2 Ω at $\simeq$ 650 W/m^2	1.17	0.30	0.29	0.31	0.27	Volt
1 Ω at $\simeq$ 800 W/m^2	0.91	0.24	0.22	0.26	0.19	Volt
0.5Ω at 750-800 W/m^2	0.52	0.12	0.12	0.20	0.09	Volt
0.5Ω at $\simeq$ 400 W/m^2	0.32	0.05	0.02	0.19	0.07	Volt
0.5Ω at $\simeq$ 550 W/m^2	0.40	0.08	0.07	0.21	0.08	Volt

OC = Open circuited voltage - S_1 is opened.

SC = Short circuited voltage - connect A to B with 0.06 Ohm.

W/m^2 = Watts per square meter - level of insolation.

Results from the "real sun" measurements seem to confirm that the choosing of cell No.1 and cell No.4 as matched pair is appropriate. However, it is interesting to further interprete the reverse polarity behaviour of some cells during the experiment with short circuit.

Experiment No.2 To demonstrate some methods and techniques for measuring V-I characteristics of photovoltaic cells and panel.

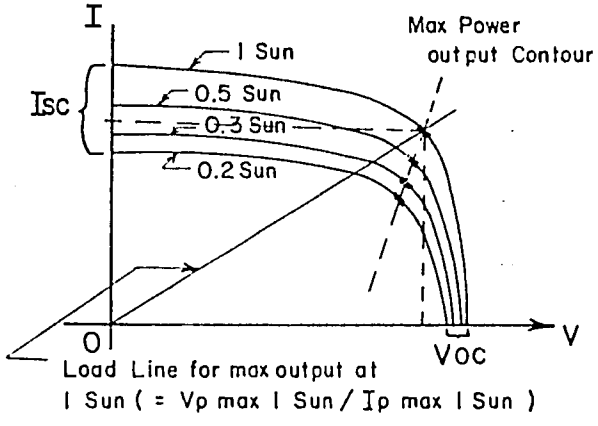

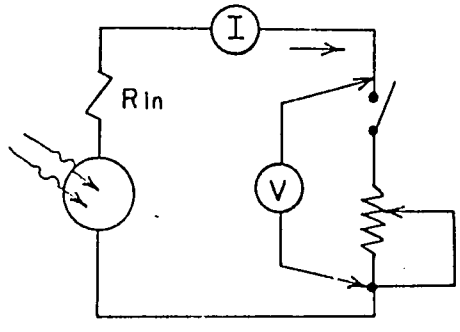

Equipment/Components used.

For ARCO Solar Panel :

- 1 ARCO Ph ..voltaic panel
  (35 x 10 cmØ ≃ 30W 14V at 1 KW/m^2)
- 1 Photo flood array (..... x 150W)
- 1 FLUKE Digital Multimeter Model 8024A
- 1 PSP Pyranometer
- 1 WARD LEONARD Sliding contact rheostat 0-178 Ohm, 220V
- 2 1 Ohm wire wound resistors 5-10W rating

For SOLAREX Cells :

- 2 Selected Solarex 8 cmØ cells
- 1 Color tran Photclamp model 650
- 1 FLUKE Digital Multimeter model 8024A
- 1 DODGE PRODUCTS Solar meter model 776
- A number of wire wound resistors (5-10W ratings to make the combination resistance from 0.25-30 Ohm)
- 1 0.06 Ohm shunt resistor made from #24 (opper wire)
- 1 8 position barrier strip.

Procedure

ARCO photovoltaic panel

The panel is exposed under the photoflood array at different heights in order to obtain light intensities of approx. 500, 350 and 200 W/m^2. At each level of intensity (i.e. height) the rheostat is adjusted from open to short circuit resistances and the voltage (V_t) and current (I_t) are recorded. A family of V-I curves can be plotted accordingly. Few thermocouples are attached to the panel and it is observed that under the incandescent array the temperature rises rapidly.

This might be the reason why open circuit voltage at a lower light intensity ($\simeq \frac{1}{4}$ Sun) is greater than that at a higher light intensity ($\simeq \frac{1}{2}$ Sun). It seems not practicable to expose a silicon cell under any photoflood intensity which is greater than $\frac{1}{2}$ sun for the temperature may easily rise above the safe operating limit.

SOLAREX Cells.

The cells, connected in series, are exposed under the photolamp at different heights (simply by changing the height of the lamp) in order to obtain light intensities of approx. 500, 300 and 150 W/m^2. At each level of intensity adjust for the combinations of wire wound resistors to give the resistance from 0.25 to 30 Ohms which are then used as load resistances. Since the sum of internal resistance of 2 cells are much smaller than that of the 35 cell panel, a 0.06 Ohm shunt resistor is used as the "Short circuit link". The short circuit current is then equal to mV drop measured across the link divided by 0.06 Ohm.

It is also observed that temperature rises under such photo-lamp is considerable. Since the area of this "small panel" is only 24 x 24 cm^2, a thin piece of opaque material can be used to shadow the panel at interval in order to reduce the temperature effect. V-I curves plotted under this procedure are therefore "look more realistic" than the one obtained from the 35 cell panel. However, no higher than $\frac{1}{2}$ Sun intensity is exposed to the "small panel" by the same reason as already mentioned in the case of ARCO panel.

MEASURING RESULTS WITH PHOTO FLOOD ARRAY (ARCO SOLAR PANEL)

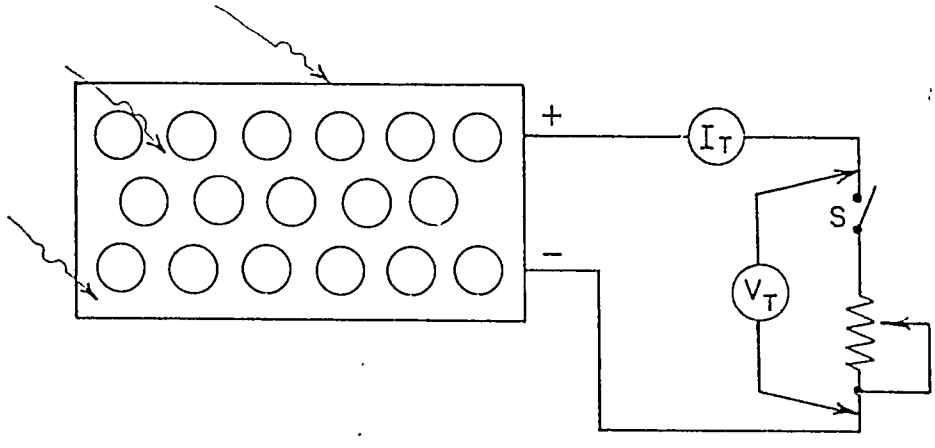

Approx 500 W/m^2			Approx 350 W/m^2			Approx 200 W/m^2		
V_t(volts)	I_t(amps)	W_t(watts)	V_t(volts)	I_t(amps)	W_t(watts)	V_t(volts)	I_t(amps)	W_t(watts)
*CC 17.58	0.00	0.00	17.14	0.00	0.00	19.29	0.00	0.00
17.09	0.186	1.6	16.85	0.094	1.6	17.13	0.39	6.7
16.12	0.484	7.8	16.08	0.328	5.3	16.0	0.414	6.6
15.10	0.608	9.2	15.08	0.520	7.8	14.86	0.432	6.4
14.19	0.630	8.9	14.07	0.584	8.2	13.5	0.458	6.2
13.42	0.646	8.7	13.38	0.594	7.9	12.9	0.468	6
12.86	0.656	8.4	12.88	0.604	7.8	12.53	0.472	5.9
12.43	0.660	8.2	12.61	0.608	7.7	12.03	0.480	5.8
11.96	0.668	$\simeq$ 8	11.96	0.616	7.3	11.52	0.486	5.6
11.47	0.677	7.8	11.46	0.622	7.1	11.05	0.492	5.4
10.99	0.682	7.5	10.98	0.628	6.9	10.4	0.496	5.2
9.95	0.698	6.9	10.52	0.632	6.6	10.13	0.498	$\simeq$ 5
9.20	0.704	6.5	10.02	0.637	6.4	8.9	0.508	4.5
8.06	0.714	5.7	9.50	0.644	6.1	8.15	0.512	4.2
6.99	0.724	5.1	8.90	0.648	5.7	7.10	0.520	3.7
6.20	0.732	4.5	8.17	0.652	5.3	5.78	0.532	3.1
4.78	0.746	3.6	6.94	0.662	4.6	5.0	0.538	2.7
3.98	0.752	3.0	6.34	0.666	4.2	3.96	0.548	2.2
2.77	0.766	2.1	4.98	0.676	3.4	3.02	0.556	1.7
1.62	0.776	1.4	3.83	0.684	2.6	2.06	0.562	1.2
0.74	0.788	0.6	2.97	0.692	2.0	1.06	0.572	0.6
			2.13	0.698	1.5	0.08	0.578	0.05
			1.08	0.706	0.76			
			0.12	0.712	0.1			

* CC = Open circuit condition (i.e. RL = ∞)

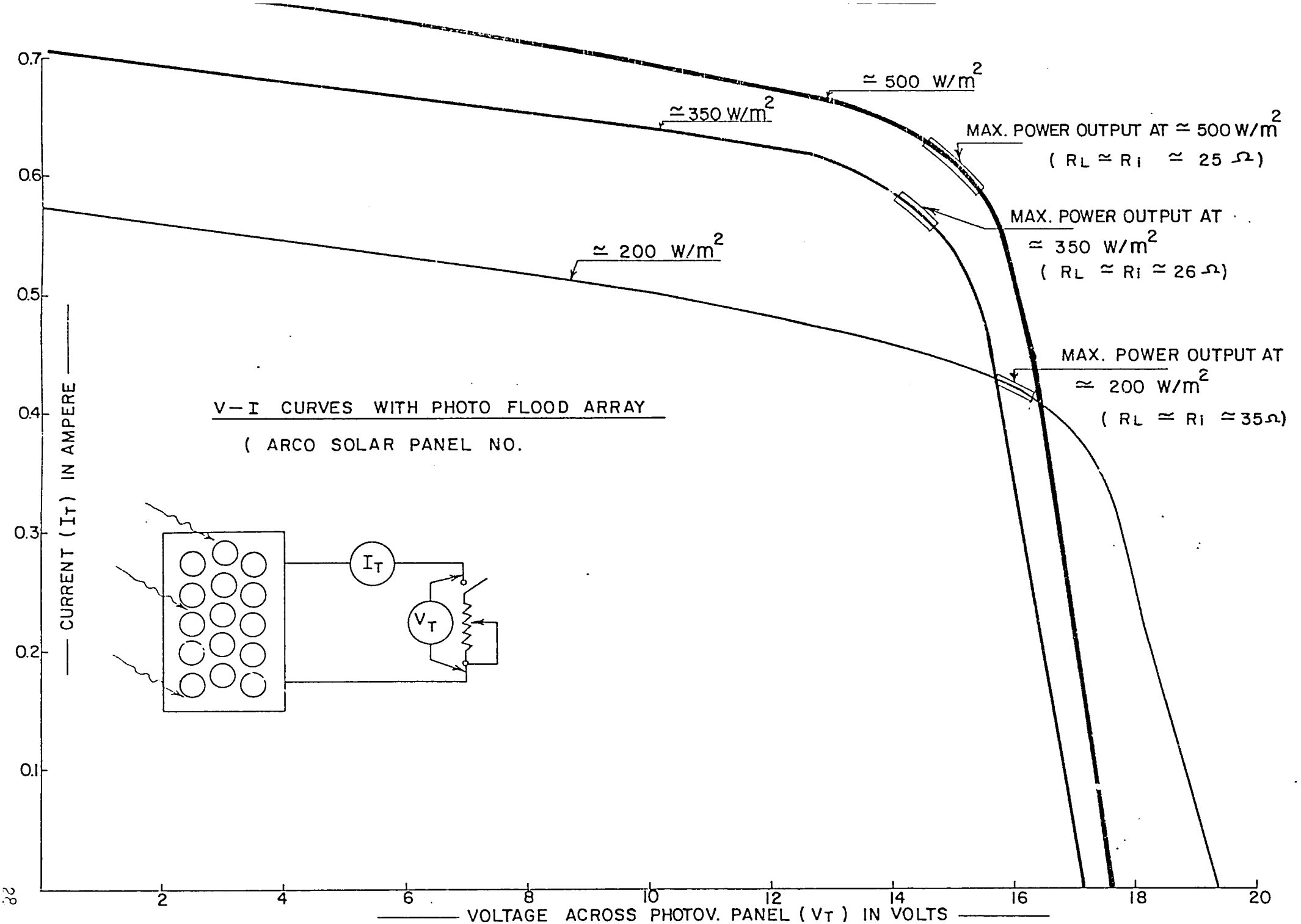
V—I CURVES WITH PHOTO FLOOD ARRAY
(ARCO SOLAR PANEL NO.
≃ 500 W/m²
≃ 350 W/m²
≃ 200 W/m²
MAX. POWER OUTPUT AT ≃ 500 W/m²
(RL ≃ Ri ≃ 25 Ω)
MAX. POWER OUTPUT AT
≃ 350 W/m²
(RL ≃ Ri ≃ 26 Ω)
MAX. POWER OUTPUT AT
≃ 200 W/m²
(RL ≃ Ri ≃ 35 Ω)
IT
VT
CURRENT (IT) IN AMPERE
VOLTAGE ACROSS PHOTOV. PANEL (VT) IN VOLTS
0.7
0.6
0.5
0.4
0.3
0.2
0.1
2
4
6
8
10
12
14
16
18
20

MEASURING RESULTS WITH PHOTOLAMP COLORTRAN 650

SOLAREX CELL No.1 & No.4 IN SERIES

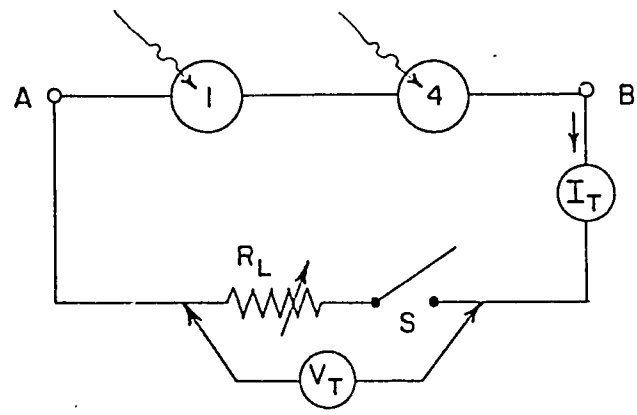

Approx 500 W/m^2			Approx 350 W/m^2			Approx 150 W/m^2		
V_t(volts)	I_t(amps)	W_t(watts)	V_t(volts)	I_t(amps)	W_t(watts)	V_t(volts)	I_t(amps)	W_t(watts)
*OC 0.829	0.00	0.00	0.795	0.00	0.00	0.756	0.00	0.00
0.813	0.031	0.025	0.776	0.026	0.020	0.725	0.024	0.017
0.809	0.049	0.039	0.767	0.038	0.029	0.711	0.035	0.025
0.797	0.059	0.047	0.742	0.074	0.055	0.668	0.067	0.044
0.794	0.083	0.066	0.721	0.103	0.074	0.600	0.091	0.058
0.779	0.118	0.092	0.707	0.118	0.083	0.622	0.103	0.064
0.750	0.166	0.124	0.691	0.138	0.095	0.584	0.117	0.068
0.735	0.245	0.180	0.661	0.165	0.109	0.536	0.134	0.072

Approx 500 W/m^2			Approx 350 W/m^2			Approx 150 W/m^2		
V_t(volts)	I_t(amps)	W_t(watts)	V_t(volts)	I_t(amps)	W_t(watts)	V_t(volts)	I_t(amps)	W_t(watts)
0.696	0.290	0.202	0.616	0.205	0.126	0.472	0.157	0.074
0.669	0.334	0.223	0.535	0.267	0.143	0.372	0.186	0.069
0.529	0.450	0.238	0.475	0.302	0.144	0.304	0.193	0.059
0.492	0.492	0.242	0.414	0.334	0.138	0.253	0.204	0.052
0.439	0.504	0.221	0.362	0.362	0.131	0.212	0.212	0.045
0.437	0.496	0.216	0.322	0.370	0.119	0.187	0.215	0.040
0.402	0.531	0.213	0.204	0.408	0.083	0.111	0.222	0.025
0.294	0.588	0.173	0.177	0.411	0.073	0.097	0.225	0.022
0.204	0.618	0.126	0.141	0.427	0.060	0.075	0.227	0.017
0.155	0.62	0.096	0.107	0.428	0.046	0.056	0.233	0.013
**SC 0.038	0.625	0.024	0.026	0.432	0.011	0.015	0.240	0.004

*OC = Open circuit condition (i.e. RL = ∞)

**SC = Short circuited with 0.060 Ω resistor from A to B

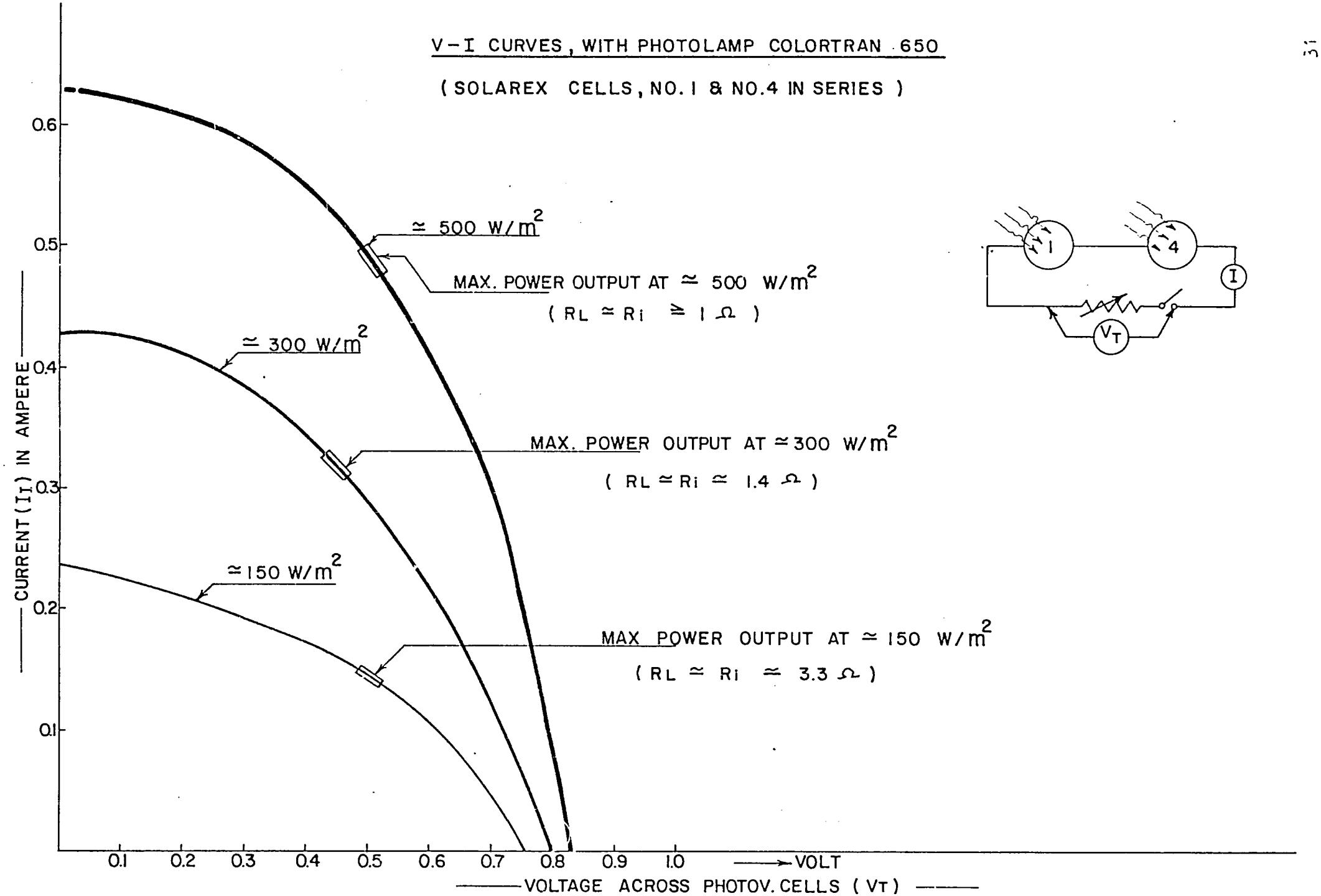
V-I CURVES, WITH PHOTOLAMP COLORTRAN 650
(SOLAREX CELLS, NO. 1 & NO. 4 IN SERIES)
≃ 500 W/m²
MAX. POWER OUTPUT AT ≃ 500 W/m²
(RL ≃ Ri ≃ 1 Ω)
≃ 300 W/m²
MAX. POWER OUTPUT AT ≃ 300 W/m²
(RL ≃ Ri ≃ 1.4 Ω)
≃ 150 W/m²
MAX POWER OUTPUT AT ≃ 150 W/m²
(RL ≃ Ri ≃ 3.3 Ω)
CURRENT (IT) IN AMPERE
0.1
0.2
0.3
0.4
0.5
0.6
0.7
0.8
0.9
1.0
VOLT
VOLTAGE ACROSS PHOTOV. CELLS (VT)
1
4
I
VT

ADDITIONAL MEASURING RESULTS WITH REAL SUN

SOLAREX CELLS No.1, 2, 3 (4 IN SERIES)

- Approx 800 W/m^2 (11-24-80, 14.30 - 16.30)

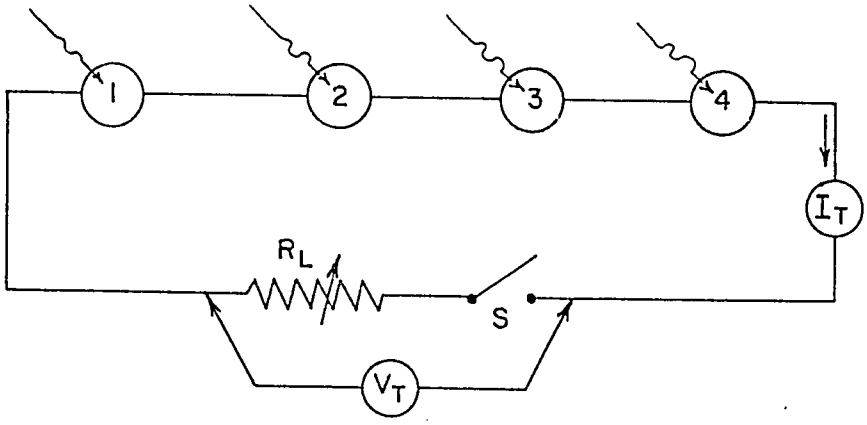

V_t(volts)	I_t(amps)	W_t(watts)	
1.766	0.00	0.00	Open circuit with " S " opened (RL = ∞)
1.718	0.061	0.105	Corr. to RL $\simeq$ 28 Ω
1.688	0.094	0.159	Corr. to RL $\simeq$ 18 Ω
1.637	0.164	0.268	Corr. to RL $\simeq$ 10 Ω
1.622	0.203	0.329	Corr. to RL $\simeq$ 8 Ω
1.525	0.305	0.465	Corr. to RL $\simeq$ 5 Ω
1.486	0.371	0.551	Corr. to RL $\simeq$ 4 Ω
1.418	0.472	0.669	Corr. to RL $\simeq$ 3 Ω
1.254	0.627	0.737	Corr. to RL $\simeq$ 2 Ω
0.901	0.001	0.812	Corr. to RL $\simeq$ 1 Ω
0.522	1.044	0.544	Corr. to RL $\simeq$ 0.5 Ω
0.070	1.122	0.078	Short circuit with 0.060 Ω resistor from A to B

For a more accurate measurement of V-I curves of a single cell or few cells in series a variable low resistance (fraction of an ohm) rheostat should be required.

Cell(s) should be allowed to expose to the insolation for not less than 10 minutes before any measurement to take place, in order that cell(s) temperature are stabilized and $\Delta i/\Delta r$ or $\Delta r/\Delta t$ becomes very small.

- Approx 950 W/m^2 (11-30-80, 11 - 12 AM)

V_t(volts)	I_t(amps)	W_t(watts)	
1.704	0	0	Open circuit with S opened (RL = ∞)
1.658	0.0552	0.0916	Corr. to RL $\simeq$ 30 Ω
1.654	0.0612	0.1013	Corr. to RL $\simeq$ 27 Ω
1.647	0.0686	0.1130	Corr. to RL $\simeq$ 24 Ω
1.631	0.0815	0.1330	Corr. to RL $\simeq$ 20 Ω
1.619	0.1619	0.2621	Corr. to RL $\simeq$ 10 Ω
1.582	0.2636	0.4171	Corr. to RL $\simeq$ 6 Ω
1.460	0.365	0.5328	Corr. to RL $\simeq$ 4 Ω
1.376	0.4586	0.6311	Corr. to RL $\simeq$ 3 Ω
1.206	0.603	0.7272	Corr. to RL $\simeq$ 2 Ω
1.110	0.740	0.8214	Corr. to RL $\simeq$ 1.5 Ω [(1+1+1)//3]
1.011	0.8425	0.8517	Corr. to RL $\simeq$ 1.2 Ω [(1+1)//3]
0.907	0.907	0.8226	Corr. to RL $\simeq$ 1 Ω
0.857	0.996	0.9792	Corr. to RL $\simeq$ 0.86 [//3//3]

V_t(volts)	I_t(amps)	W_t(watts)	
0.775	1.0333	0.8091	Corr. to RL $\simeq$ 0.75 Ω [1//3]
0.679	1.1316	0.7684	Corr. to RL $\simeq$ 0.6 Ω [1//3//3]
0.585	1.17	0.6844	Corr. to RL $\simeq$ 0.5 Ω [1//1]
0.421	1.275	0.5371	Corr. to RL $\simeq$ 0.33 Ω [1//1//1]
0.327	1.308	0.6277	Corr. to RL $\simeq$ 0.25 Ω [1//1//1//1]
0.089	1.4126	0.1257	Corr. to RL $\simeq$ 0.63 Ω (which can be considered as a short circuit condition for this measurement)

It can be observed from this experiment that as the time goes on the current will increase and the voltage will decrease considerably. Since the temperature keeps on accumulating with time it is understood that $\Delta i/\Delta t$* is + while the $\Delta v/\Delta t$* is − . It is very likely that while the measurement is going on the V-I curves will be shifted leftward with increasing current and decreasing voltage. This behavior is predicted in theory and demonstrated in some literatures.** To minimize this temperature effect, encapsulation with see-through material or with back attached heatsink have been introduced by some manufactures with considerable success. However, it is a good practice to always provide some natural ventilation i.e. leaving some space between the panels and the roof so that the max amount of heat (both from the eighty odd percents of the non usable solar energy and the I^2Rt of the panel when loaded) will be convected away.

* $\Delta v/\Delta$ time are also observed and measured in this experiment

** Philips Technical information No. 052 page 5

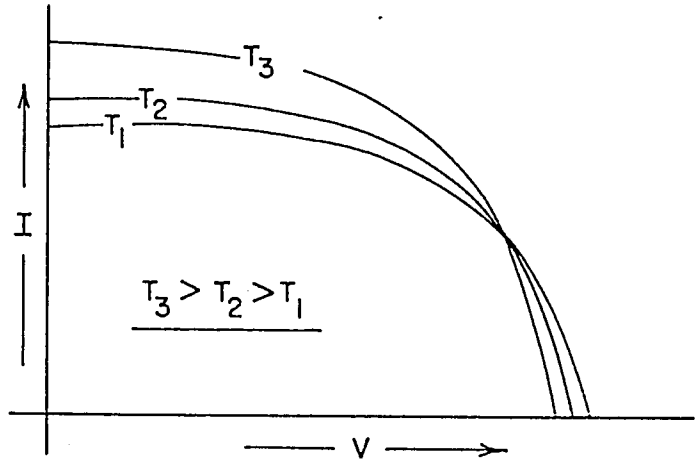

Effect of temperature on the generating characteristics of photo voltaic panel.

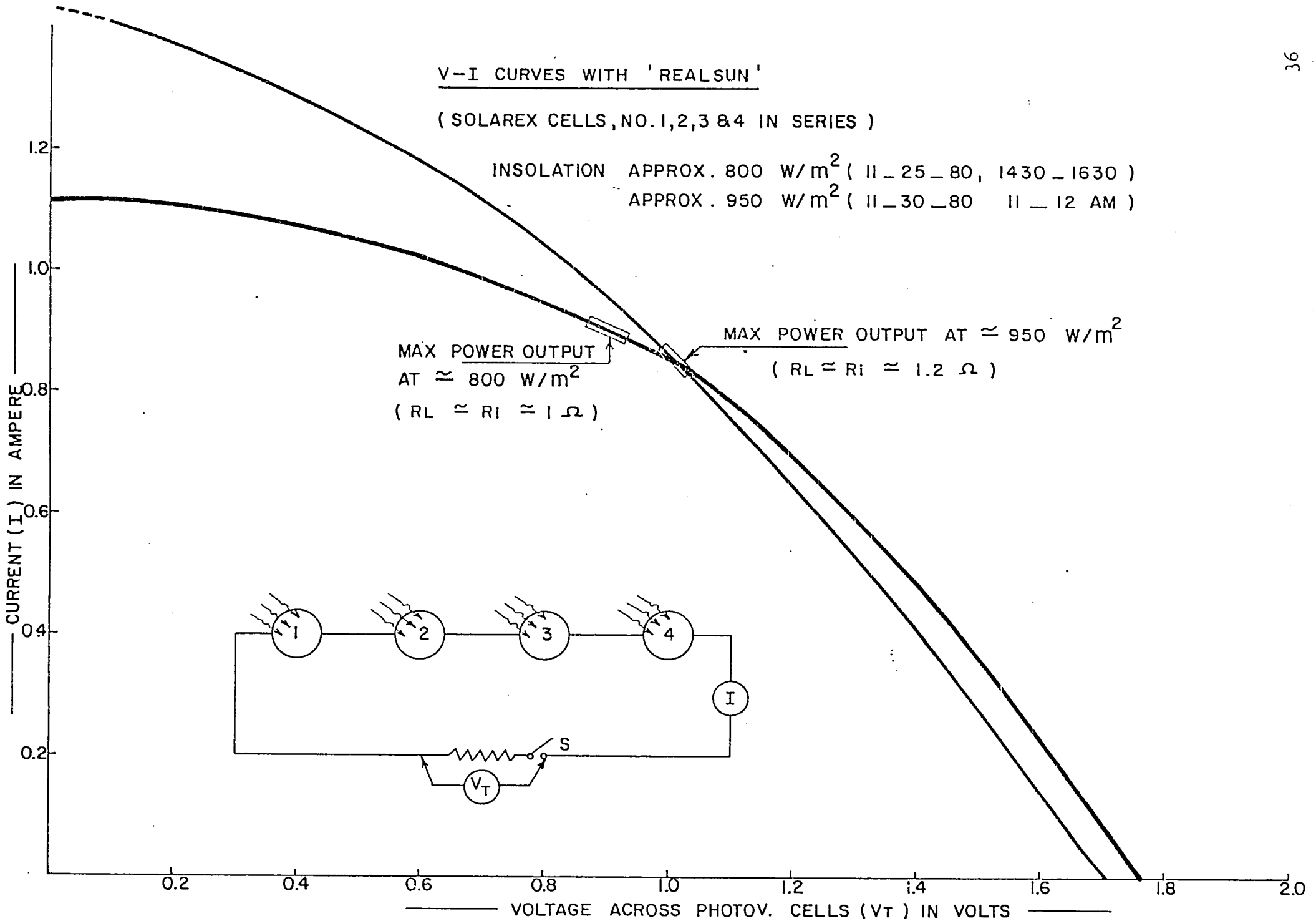
V-I CURVES WITH 'REALSUN'
(SOLAREX CELLS, NO. 1,2,3 & 4 IN SERIES)
INSOLATION APPROX. 800 W/m2 (11_25_80, 1430_1630)
APPROX. 950 W/m2 (11_30_80 11_12 AM)
MAX POWER OUTPUT AT ≃ 800 W/m2
(RL ≃ Ri ≃ 1 Ω)
MAX POWER OUTPUT AT ≃ 950 W/m2
(RL ≃ Ri ≃ 1.2 Ω)
CURRENT (I) IN AMPERE
VOLTAGE ACROSS PHOTOV. CELLS (VT) IN VOLTS
1.2
1.0
0.8
0.6
0.4
0.2
0.2
0.4
0.6
0.8
1.0
1.2
1.4
1.6
1.8
2.0
1
2
3
4
I
S
VT

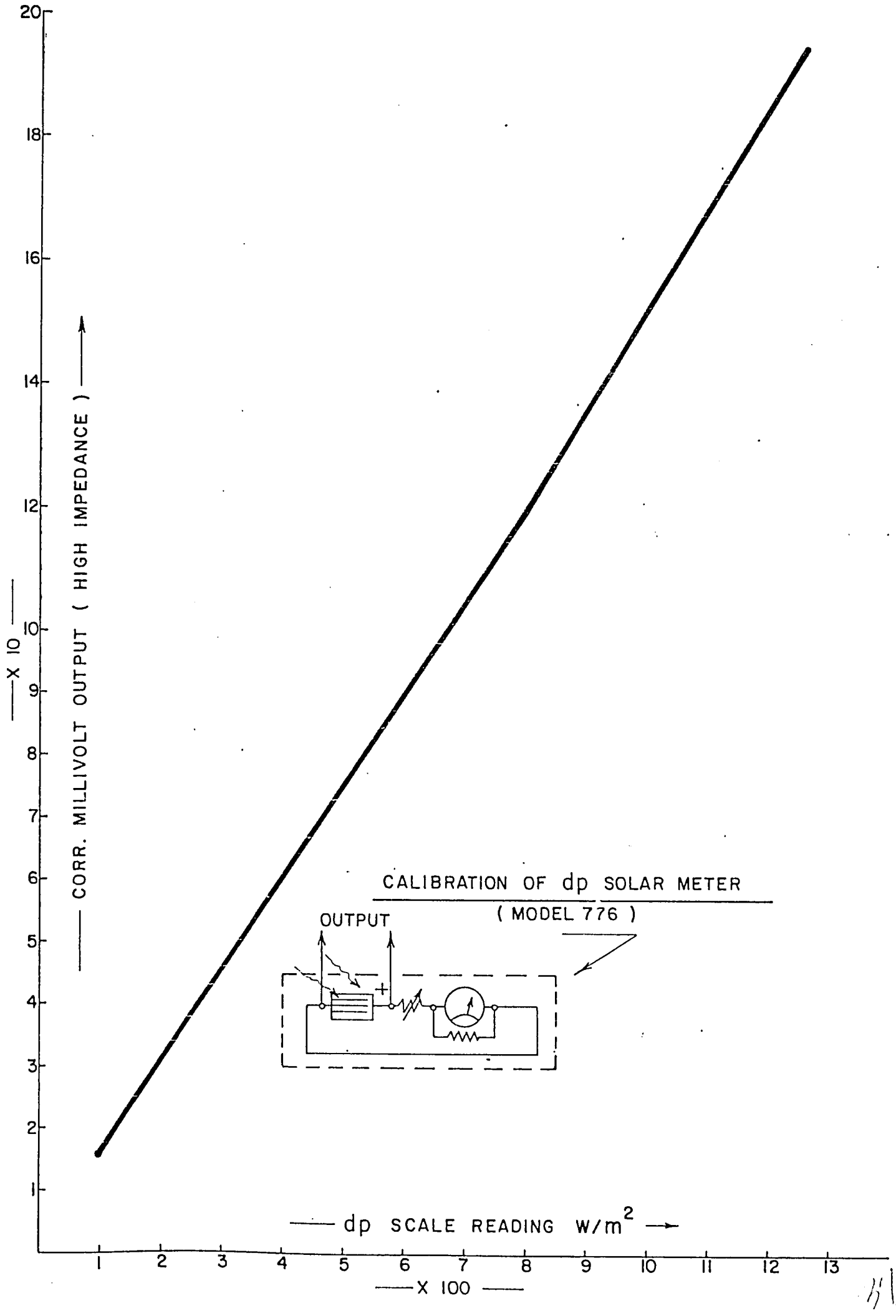
CALIBRATION OF dp SOLAR METER
(MODEL 776)
OUTPUT
+
— CORR. MILLIVOLT OUTPUT (HIGH IMPEDANCE) —
— X 10 —
— dp SCALE READING W/m2 —
— X 100 —
20
18
16
14
12
10
9
8
7
6
5
4
3
2
1
1
2
3
4
5
6
7
8
9
10
11
12
13

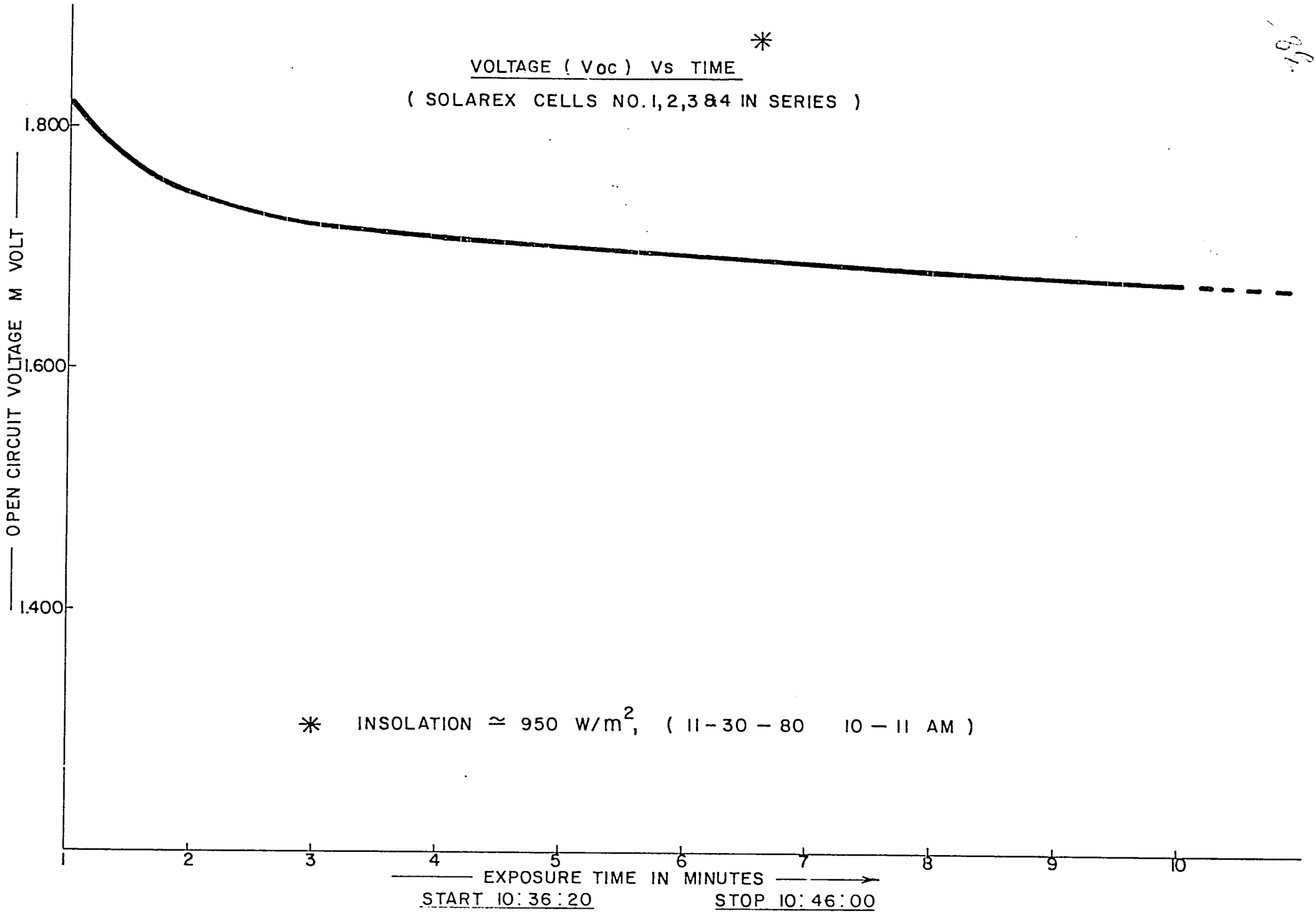
VOLTAGE (Voc) Vs TIME *
(SOLAREX CELLS NO. 1, 2, 3 & 4 IN SERIES)
1.800
1.600
1.400
OPEN CIRCUIT VOLTAGE M VOLT
* INSOLATION ≃ 950 W/m², (11-30-80 10 – 11 AM)
1
2
3
4
5
6
7
8
9
10
EXPOSURE TIME IN MINUTES
START 10:36:20
STOP 10:46:00

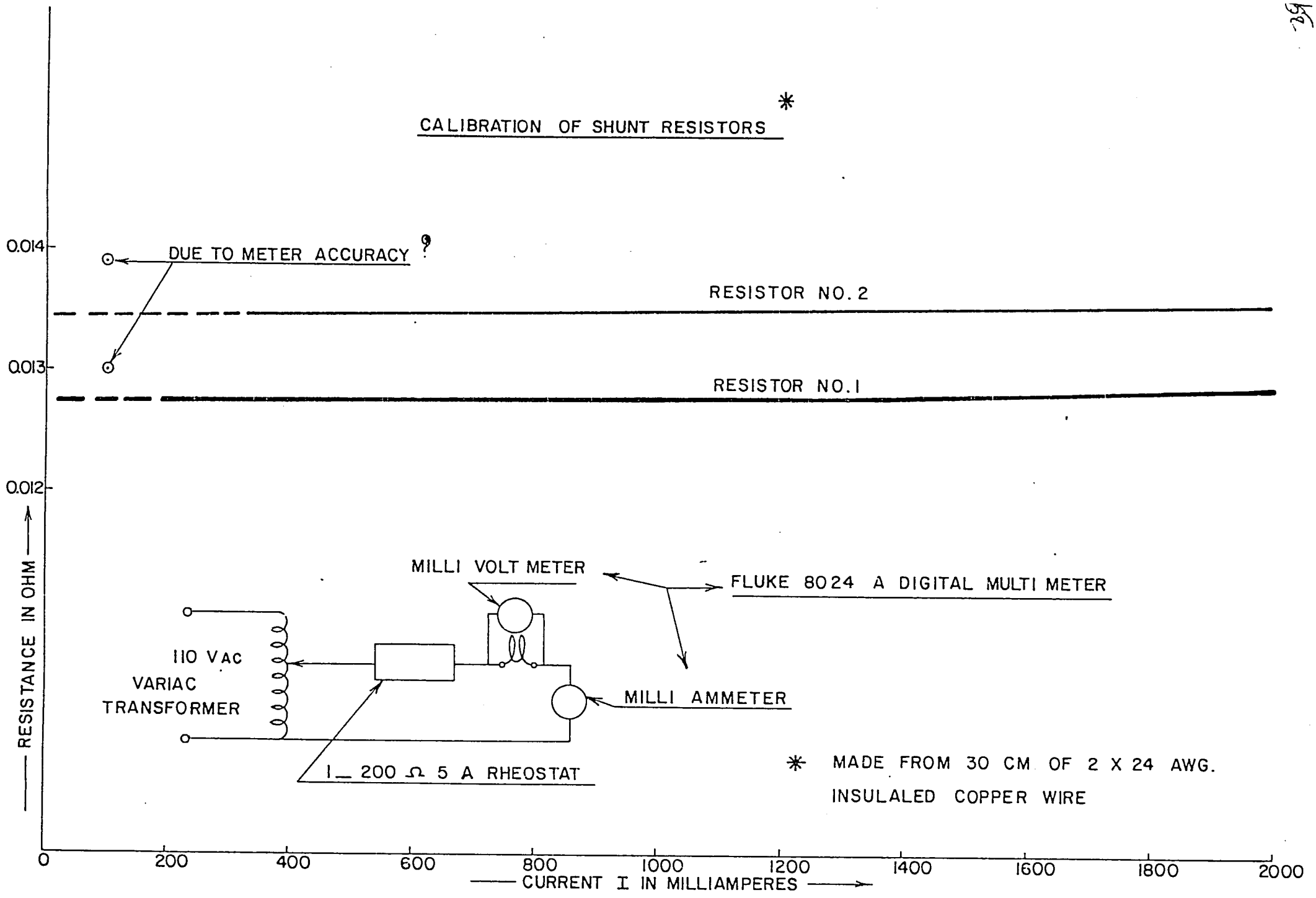
CALIBRATION OF SHUNT RESISTORS *
DUE TO METER ACCURACY ?
RESISTOR NO. 2
RESISTOR NO. 1
0.014
0.013
0.012
RESISTANCE IN OHM
MILLI VOLT METER
FLUKE 8024 A DIGITAL MULTI METER
110 VAC
VARIAC
TRANSFORMER
MILLI AMMETER
1 — 200 Ω 5 A RHEOSTAT
* MADE FROM 30 CM OF 2 X 24 AWG.
INSULALED COPPER WIRE
0
200
400
600
800
1000
1200
1400
1600
1800
2000
CURRENT I IN MILLIAMPERES

Experiment No.3 To demonstrate the effectiveness of a storage battery in extracting maximum electrical energy from a photovoltaic panel.

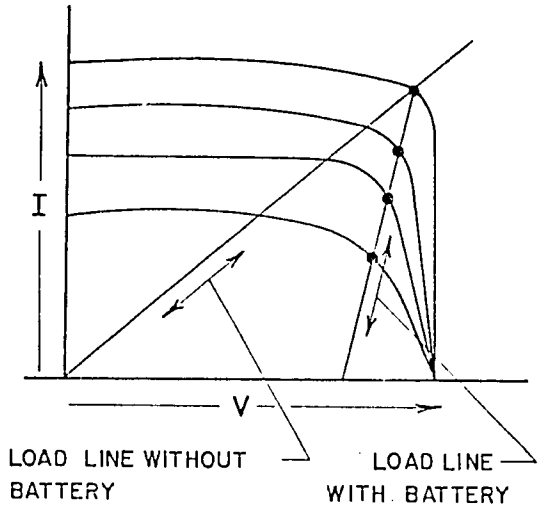

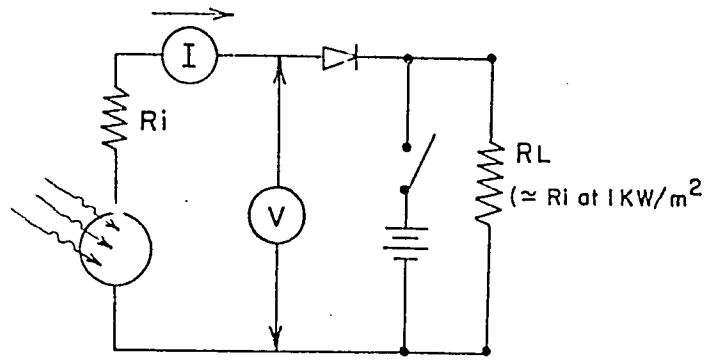

Equipment/components used

- 1 ARCO Photovoltaic panel (35 x 10 cmØ, ≃ 30W 14V at 1 KW/m^2)
- 1 Photoflood array.
- 2 FLUKE Digital meltimeter model 8024A.
- 1 PSP Pyranometer.
- 1 WARD LEONARD Sliding contact rheostat 0-178 Ohms 220V.
- 1 50 AH 12V automobile type battery.
- 2 1 Ohm wire wound resistors 5-10W rating.

Procedure

With photoflood array

The ARCO panel is exposed under the photoflood array at different heights for different light intensities. At each height, the voltage and current outputs of the panel are measured with and without batteries (by means of switch S). The load resistance RL, is adjusted at 8 Ohms in order to match the panel's equivalent internal resistance (Ri) at 1 KW/m^2.

Thermocouples of T type are attached to various positions of the panel in order that temperature profile can be monitored if needed.

To avoid excessive temperature rise of solar panel when exposed under the photoflood light, measurements are made at upto 200-300 W/m^2 only.

With real sun

The ARCO panel is exposed in real sun at about noon hour. At each insolation levels voltage current outputs are measured with and without batteries (by means of switch S).

Since the real insolation may be changed rapidly due to the passing cloud, error in measuring results can not be avoided. However, with some arrangement such as each person in the group takes one (and different) reading simultaneously such error are minimized.

Real time measurements under real sun, using 2 two pen strip chart recorder are made on two identical panels-one with storage batteries and another without.

The effectiveness of storage batteies as maximum energy extractor as well as voltage regulator can be clearly observed.

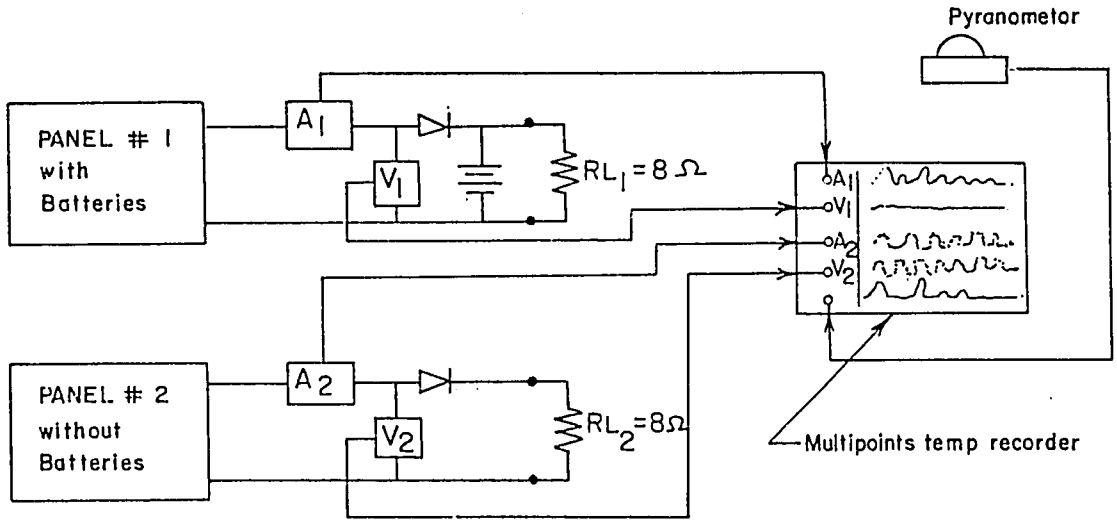

Block Diagram of arrangement for a real time comparison of two identical photovoltaic panels with and without batteries

INSOLATION CONDITIONS	Without Batt.			With Batt.			Remarks
	V	A	W	V	A	W	
$\frac{1}{4}$ Sun at :							
0 min	7.69	0.84	6.46	13.65	0.75	10.23	V = Volt
5	7.77	0.86	6.68	13.56	0.79	10.71	A = Ampere
10	7.74	0.85	6.58	13.58	0.79	10.73	W = Watt
15	7.77	0.86	6.68	13.54	0.79	10.69	
20	7.75	0.86	6.66	13.54	0.79	10.69	

INSOLATION CONDITIONS	Without Batt.			With Batt.			Remarks
	V	A	W	V	A	W	
$\frac{1}{3}$ Sun at :							
0 min	9.36	1.05	9.83	13.77	1.01	13.91	Up to $\frac{1}{3}$ Sun the
5	9.43	1.06	9.99	13.71	1.02	13.98	temperature
10	9.45	1.08	10.21	13.76	1	13.76	effect is not
15	9.48	1.07	10.14	13.75	1	13.75	considerable
Real sun at :							
$\simeq$ 100 W/m^2	3.27	0.31	1.01	13.20	0.27	3.56	Please note that
$\simeq$ 300	8.02	0.81	6.50	13.64	0.76	10.36	with batteries
$\simeq$ 350	8.04	0.96	7.72	13.84	0.81	11.21	the voltage re-
$\simeq$ 1000	16.31	1.91	31.15	14.62	2.25	32.90	gulation is
$\simeq$ 1050	16.40	1.93	31.65	14.65	2.26	33.11	approx 10% from
$\simeq$ 1075	16.44	1.94	31.90	14.70	2.27	33.37	100-1150 W/m^2
$\simeq$ 1100	16.94	1.95	33.03	14.71	2.39	35.15	
$\simeq$ 1150	16.51	1.99	32.85	14.84	2.41	35.76	

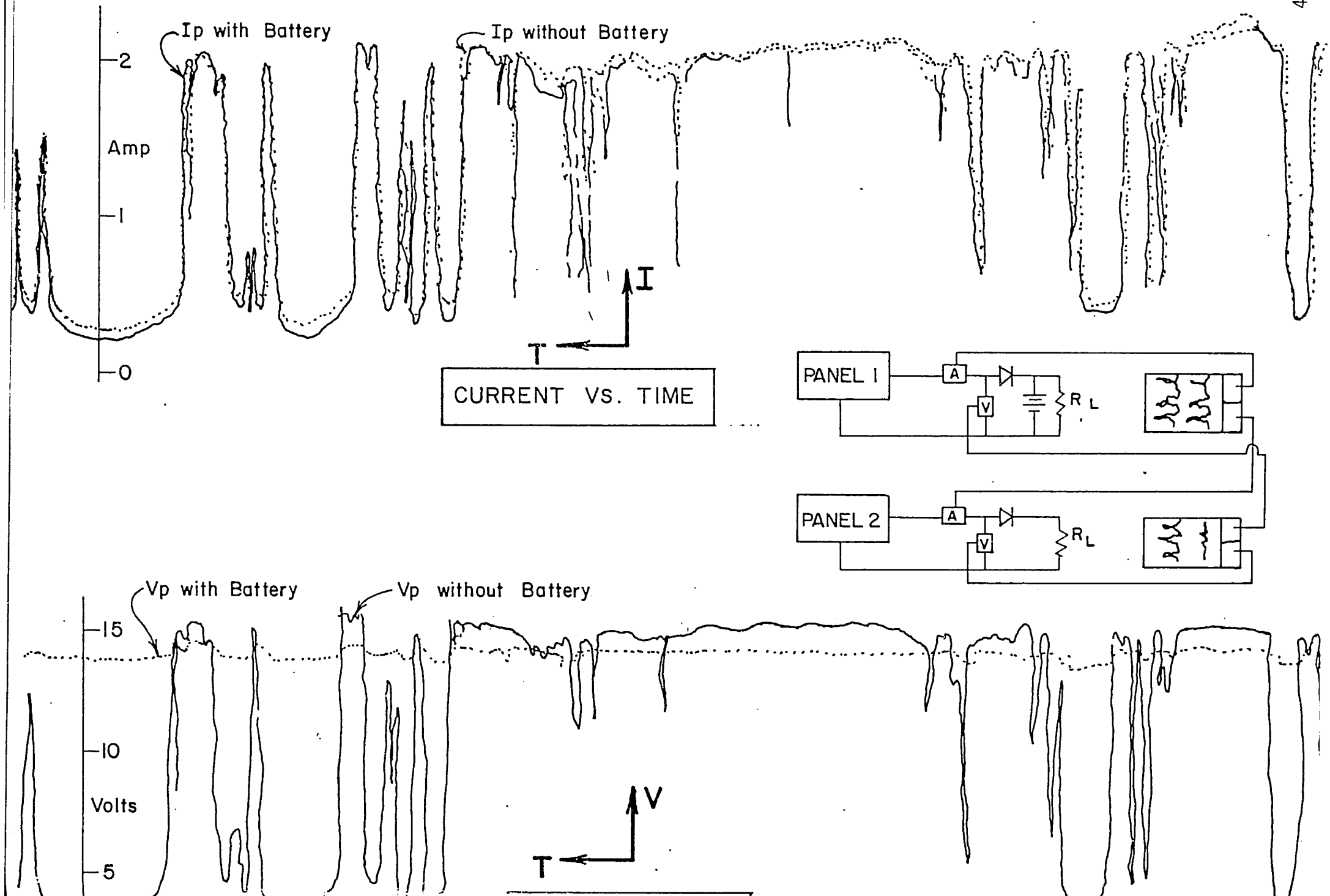
Ip with Battery
Ip without Battery
2
Amp
1
0
I
T
CURRENT VS. TIME
PANEL 1
A
V
R L
PANEL 2
A
V
RL
Vp with Battery
Vp without Battery
15
10
Volts
5
V
T

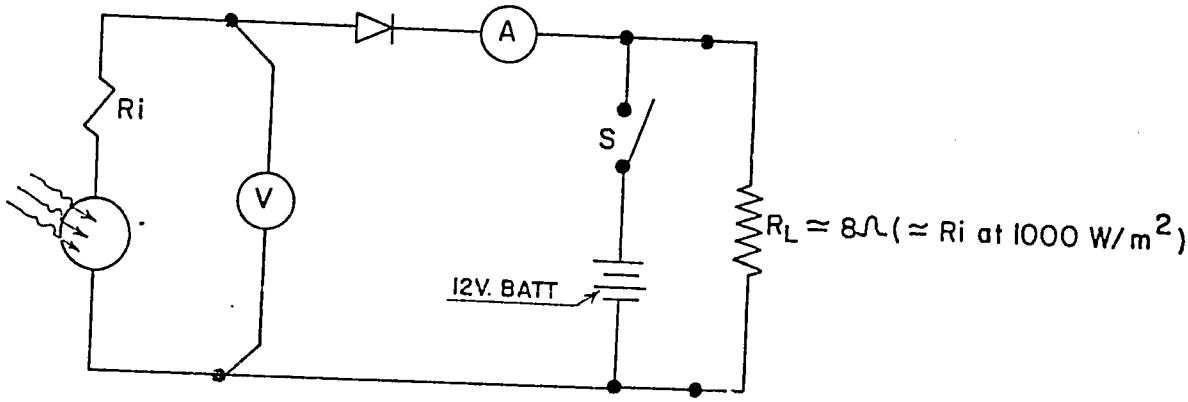
Ri
V
A
S
12V. BATT
$R_L \simeq 8\Omega$ ($\simeq$ Ri at 1000 W/m^2)

Experiment No.4 To demonstrate the potential severity of shadow effect on a shadowed cell

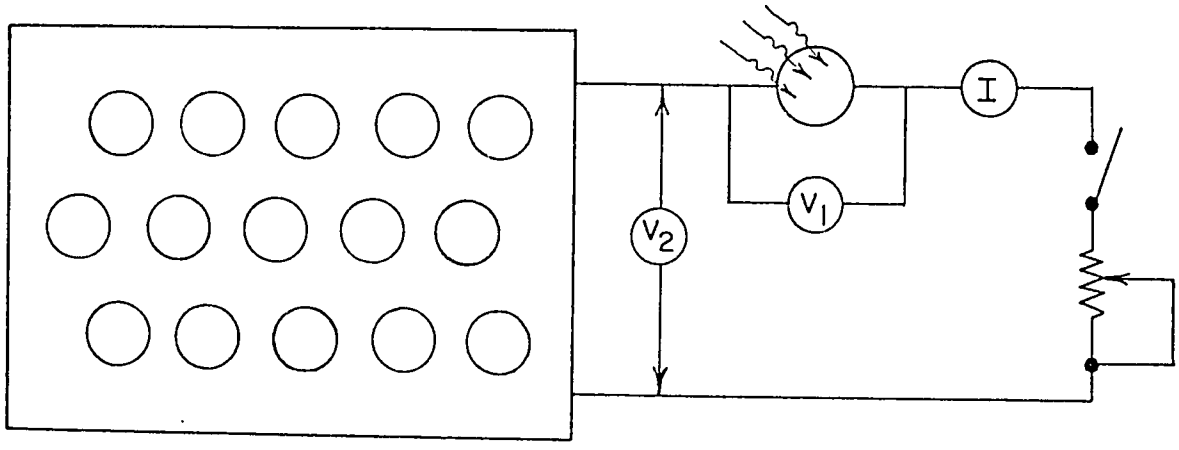

Equipment/Components used

- 1 ARCO photovoltaic panel (35 x 10 cmØ)
  $\simeq$30W 14V at 1 KW/m^2
- 1 Radio Shack 7.5 cmØ silicon solar cell.
- 1 FLUKE Digital multimeter model 8024A
- 1 DODGE PRODUCTS solar meter model 776
- 1 WARD LEONARD sliding contact rheostat.
  0-178 Ohm 220V
- 1 SIMPSON Multimeter model 260 (for current measurement)

Procedure

Connected a Radio Shack cell, ARCO panel an ammeter and the rheostat in series. Then exposed both cell and panel under the real sun. Monitor voltage drop across the cell (V_1), the panel (V_2), the circuit current (I) and cell temperature (T, by means of a thermocouple) when the cell is not shadowed, totally shadowed and partially shadowed.

It is observed that :

1) When not shadowed, voltage drop and current through the cell is at normal ($\simeq$ 0.5V, 2A). Temperature is about ambient.

2) When totally shadowed, voltage drop across the cell is high ($\simeq$18V) and current through it is very low. Temperature is about ambient.

3) When partially shadowed, voltage drop across the cell is high ($\simeq$ 17V) and current through it is at normal ($\simeq$ 2A). Temperature rises to 250°F and encapsulating material start to deform.

These results seem to confirm the theoretical predictions about the shadow effect.

Note During this experiment/demonstration rheostat is kept at about $\leq$ 1 Ohm and insolation changed slightly between 850-1,000 W/m^2.

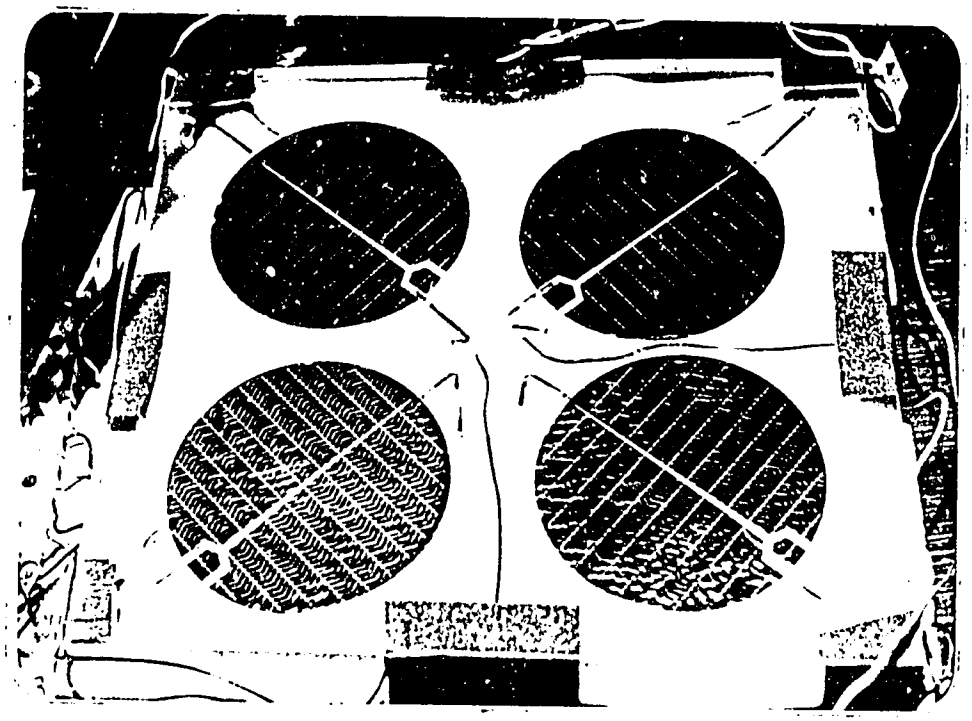

Selected cells (SOLAREX) arranged for the experiment in which simultaneous and uniform exposure under artificial light and real sun are required.

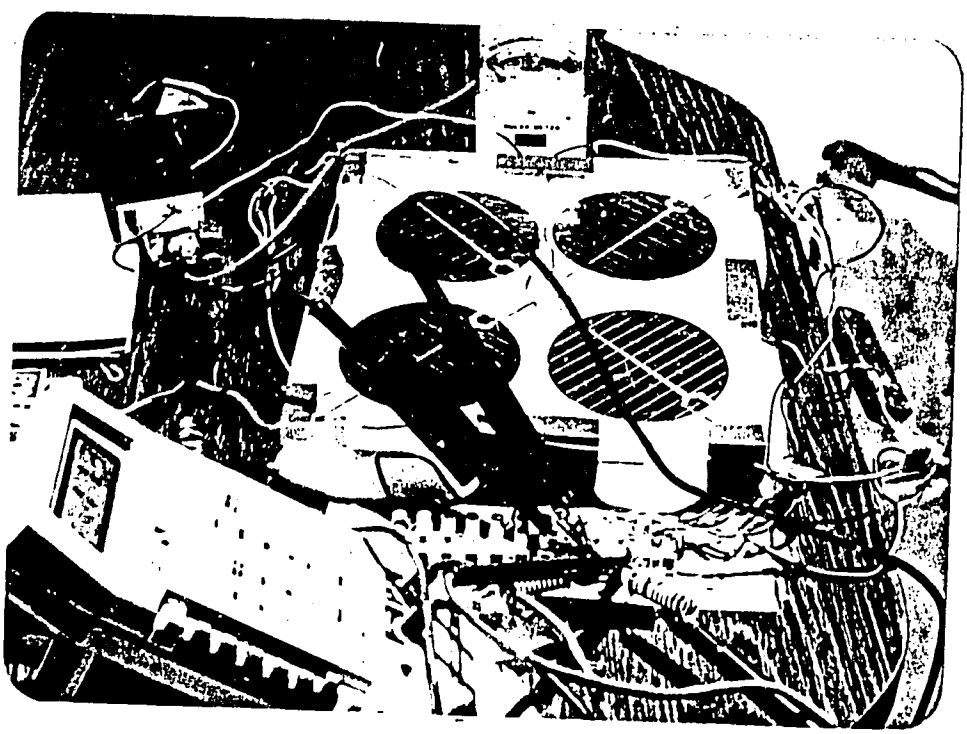

Experiment of selected cells with an artificial light.

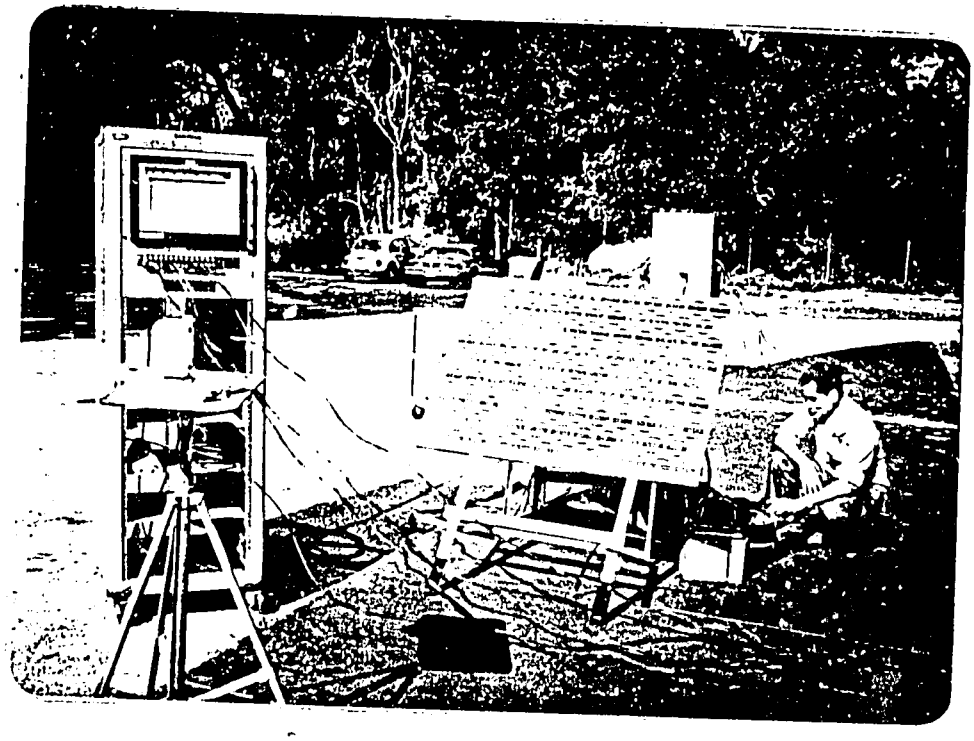

An experiment to demonstrate the effectiveness of a storage battery in extracting maximum electrical energy from a photovoltaic panel.

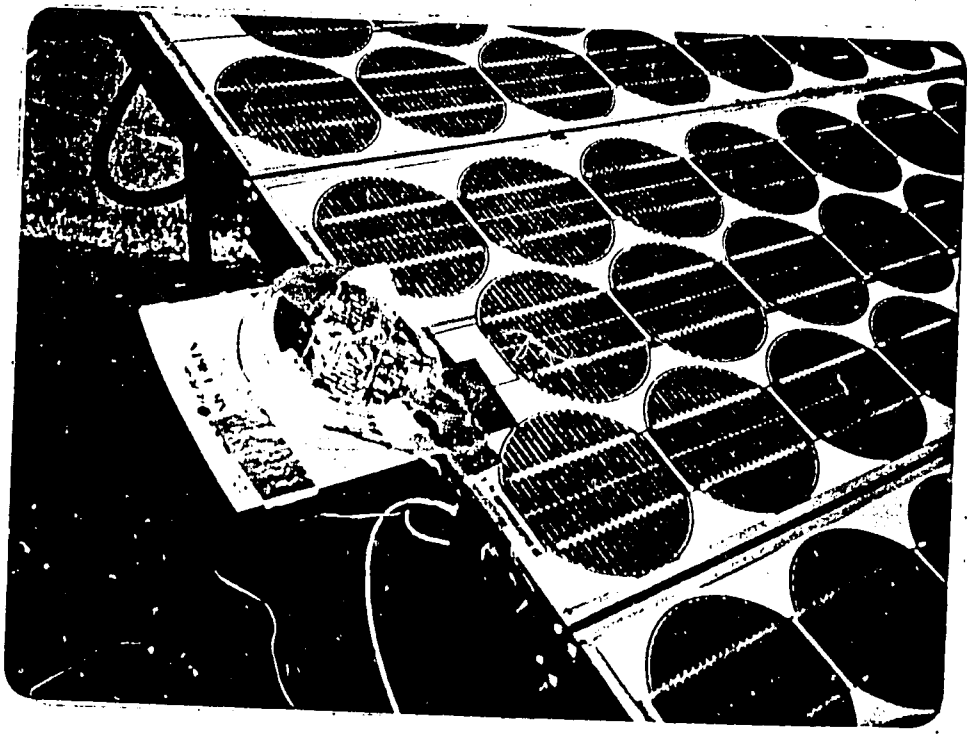

An experiment to demonstrate the potential severity of shadow effect on a shadowed cell.

CONCLUSION

It is our conclusion that the experimental results show good correlation with theoretical predictions of photovoltaic cells (solar cells).

For long term application, degradation of solar cells resuting in poor performance can be considerable. Hence manufacturing technology of cells and encapsulation cannot be ignored irrespective of high cost. It is felt that there will be a trend toward lower prices as technological breakthroughs occur.

REFERENCES

1. "Solar Power for Telecommunication", by Michael Mack, M.I.E. Aust., issued by Telecom Australia Hq Information and publicity Office, 1979. ISBN 0642-91056-1

2. "Solar Panels for Terrestrial Application", by Hr. Dijkstra and C. Franx, Philips Technical Information No. 052 December, 1978.

3. "Solar Energy Conversion with Solid State Devices", by Ga Van Der Leeden, C. Daey Ouwens and A Veefkind Eindhoven University of Technology June 1974.

4. "Solar Electrics Research And Development", by Robert L. Bailey Associate Professor, Dept. of Electrical Engieering, University of Florida Gainesville, L.C. No. 79-54841 ISBN 0-250-40346-3

5. "Renewable Energy Resources for Developing Countries", by Norman L. Brown US. Agency for International Development (AID), Washington, DC. 20523