PN-AAV-318 45878

DOE/NASA/20485-16
NASA TM-83625

Low-Frequency Switching Voltage Regulators for Terrestrial Photovoltaic Systems

Richard DeLombard
National Aeronautics and Space Administration
Lewis Research Center

May 1984

Work performed for
U.S. DEPARTMENT OF ENERGY
Conservation and Renewable Energy
Division of Photovoltaic Energy Technology

and

U.S. Agency for International Development
Bureau for Science and Technology
Office of Energy

DISCLAIMER

This report was prepared as an account of work sponsored by an agency of the United States Government. Neither the United States Government nor any agency thereof, nor any of their employees, makes any warranty, express or implied, or assumes any legal liability or responsibility for the accuracy, completeness, or usefulness of any information, apparatus, product, or process disclosed, or represents that its use would not infringe privately owned rights. Reference herein to any specific commercial product, process, or service by trade name, trademark, manufacturer, or otherwise, does not necessarily constitute or imply its endorsement, recommendation, or favoring by the United States Government or any agency thereof. The views and opinions of authors expressed herein do not necessarily state or reflect those of the United States Government or any agency thereof.

Printed in the United States of America

Available from
National Technical Information Service
U.S. Department of Commerce
5285 Port Royal Road
Springfield, VA 22161

NTIS price codes[1]
Printed copy: A02
Microfiche copy: A01

[1]Codes are used for pricing all publications. The code is determined by the number of pages in the publication. Information pertaining to the pricing codes can be found in the current issues of the following publications, which are generally available in most libraries: *Energy Research Abstracts (ERA); Government Reports Announcements* and Index (*GRA* and I); *Scientific and Technical Abstract Reports (STAR);* and publication, NTIS-PR-360 available from NTIS at the above address.

DOE/NASA/20485-16
NASA TM-83625

Low-Frequency Switching Voltage Regulators for Terrestrial Photovoltaic Systems

Richard DeLombard
National Aeronautics and Space Administration
Lewis Research Center
Cleveland, Ohio 44135

May 1984

Work performed for
U.S. DEPARTMENT OF ENERGY
Conservation and Renewable Energy
Division of Photovoltaic Energy Technology
Washington, D.C. 20545
Under Interagency Agreement DE-AI01-79ET20485

and

U.S. Agency for International Development
Bureau for Science and Technology
Office of Energy
Washington, D.C.
Under Interagency Agreement PASA-NASA/DSB-5710-2-79

LOW-FREQUENCY SWITCHING VOLTAGE REGULATORS

FOR TERRESTRIAL PHOTOVOLTAIC SYSTEMS

Richard DeLombard

National Aeronautics and Space Administration
Lewis Research Center
Cleveland, Ohio 44135

E-2060

SUMMARY

The NASA Lewis Research Center (LeRC) is managing both the Photovoltaic Technology Project for the Agency for International Development and the Stand-Alone Applications Project for the Department of Energy. Under these projects, photovoltaic (PV) systems technology is being developed, applied and evaluated in a systematic way relative to a variety of applications to investigate the usefulness and cost effectiveness of the technology. In developing early stand-alone systems in the mid-to-late 1970's, LeRC recognized the need for a universal, compact, reliable, low-cost, nondissipating PV system voltage regulator. In response to this need, the LeRC designed, fabricated and laboratory-tested two types of low-frequency switching type regulators. Sixteen of these regulators were subsequently built and installed in a variety of stand-alone field test systems located in Africa and the U.S. These regulators have accumulated over 35 regulator-years of 100 percent trouble-free operation. This report describes the design and operating characteristics of these regulators, referred to as duty cycle regulators (DCRs). The two DCRs described in this report, one for high-voltage (120 V) and one for low-voltage (6, 12 or 24 V), are designed to operate in various types of systems and have several advantages over other regulator designs. The DCRs are small in size, low in cost, very low in power dissipation, reliable and allow considerable flexibility in system design.

INTRODUCTION

The NASA Lewis Research Center (LeRC) is managing both the Photovoltaic Technology Project for the Agency for International Development (AID) and the Stand Alone Applications Project for the Department of Energy. Under these projects, photovoltaic (PV) systems technology is being developed, applied and evaluated in a systematic way relative to a variety of applications to investigate the usefulness and cost effectiveness of the technology.

In developing early stand alone systems in the mid- to late-1970's, LeRC recognized the need for a universal, compact, reliable, low-cost, nondissipating PV system voltage regulator. At that time, there were no commercially available voltage regulators having these characteristics, and the two types of regulators commonly used (linear shunt and linear series) had several disadvantages. In response to this need, the LeRC designed, fabricated and laboratory-tested two types of low-frequency switching type regulators. Sixteen of these regulators were subsequently built and installed in a variety of stand alone field test systems located in Africa and the U.S. These regulators have accumulated over 35 regulator-years of 100 percent trouble free operation.

This report describes the design and operating characteristics of these regulators, referred to as duty cycle regulators (DCRs). The two DCRs described in this report, one for high voltage (120 V) and one for low voltage (6, 12 or 24 V), are designed to operate in various types of systems and have several advantages over other regulator designs. The DCRs are small in size, low in cost, very low in power dissipation, reliable and allow considerable flexibility in system design.

Ronald C. Cull assisted in the conceptual design and construction of the prototype high voltage DCR. He also assisted in the analysis of the encapsulant failure of the high voltage DCRs installed in Upper Volta.

BACKGROUND

A stand-alone PV system generally consists of the following components (fig. 1); a PV array, a battery, system controls, load devices and instrumentation. The function of the system controls is generally to regulate the system voltage and provide control of the load devices.

As part of the system controls, a PV system voltage regulator performs the function of voltage regulation and battery protection by controlling the charging current into the system battery. This limits the maximum system (and battery) voltage and prevents conditions of battery over charge.

A basic voltage regulator performs three functions; voltage sensing, voltage comparison and power control. The three circuit elements that perform these functions are shown in figure 2. PV system voltage regulators may be divided into two classes (series and shunt) and further into two subclasses (linear and switching). Figure 3 illustrates each of these in terms of the circuit elements shown in figure 2. The principle disadvantage of the linear shunt type is that array power must be dissipated when the regulator is shunting the array output. Similarly, the linear series regulator must dissipate heat (albeit a lesser amount) when limiting the amount of array power to the battery and loads. Switching type regulators avoid the power dissipation problem, but they have the problem of switch lifetime (if a mechanical relay is used) and/or inadequate proportional control when the battery is fully charged. To overcome these problems, the LeRC designed a variable ON/OFF ratio, low-frequency switching type regulator using solid state devices as the power switching elements. This type of regulator can be used with practically any system voltage and can be used in either a series or shunt switching mode.

A high-voltage DCR was designed in September 1978 to be used as a back-up regulator in an existing 120 V dc system. When the need arose in early 1979 for a low-voltage DCR, it was realized that the high voltage DCR could not be modified for 12 V operation. A separate DCR was then designed for low-voltage systems.

PRINICIPLE OF OPERATION

The principle of operation of a DCR is simple. Figure 4 illustrates the output duty cycle plotted against input voltage for a DCR. Figure 5

illustrates a block diagram of a typical system utilizing a DCR. For the system shown in figure 5, the DCR controls the array current by switching the series power control relay on and off with a duty cycle dependent on system voltage. The duty cycle is defined as the ratio of the regulator output ON time to the regulator output ON plus OFF times in percent (1).

(1) Duty Cycle = [(Regulator ON Time)/(Regulator ON+OFF Time)] x 100 percent

If the battery voltage is low, indicating a low battery state-of-charge and/or a high-load current, the DCR decreases the duty cycle so that the average array current is high (relative to the full array current). If the battery voltage continues to decrease due to reduced charging current or increased load current, the array is turned completely on at the DCR's minimum control voltage. As the battery voltage rises due to an increase in state-of-charge or a decreased load current, the DCR increases the duty cycle so that the average array current is low. If the battery voltage continues to increase, the DCR continues to increase the duty cycle until the array is turned completely off at the DCR's maximum control voltage. The average power from the array to the system is thus varied according to the system voltage.

DESIGN DESCRIPTION OF THE HIGH-VOLTAGE DCR

The high-voltage DCR schematic diagram is shown in figure 6 and incorporates an oscillator/timer integrated circuit, IC1, type 555 (ref. 1). With the external components, the circuit is configured as an astable oscillator with a period of approximately 5 seconds. In this circuit, the duty cycle of the output, Vo, is determined by the control voltage, Vc, at pin 5 of IC1. As the control voltage increases, the duty cycle increases and vice versa. At a voltage, Vcmax, the duty cycle is 100 percent and at Vcmin, the duty cycle is 0 percent.

The control voltage for IC1 is derived from the system voltage by means of a zener diodes, Zd1 and Zd2, and a potentiometer, R1. The zener voltage is subtracted from the system voltage to result in a difference voltage across R1. This voltage, or a fraction thereof (set by R1), is Vc. Capacitor C2 is used to reduce the amount of noise or interference contained in Vc.

There are three modes of operation of the circuit:

1)	100 percent duty cycle	($Vc \geq Vcmax$)	Regulator ON,
2)	variable duty cycle	($Vcmax > Vc > Vcmin$)	Regulator cycling, and
3)	0 percent duty cycle	($Vcmin \geq Vc$)	Regulator OFF.

Details of the high-voltage DCR are shown in figure 7. The basic configuration of the circuit is that of a digital oscillator. The timing of the oscillator is determined by the charge and discharge rate of the timing capacitor C1 through resistor network R2 through R6.

The regulator output ON and OFF times are set according to the values of R2 through R6, C1, the internal resistances of the integrated circuit and the control voltage, Vc. Thus, the duty cycle changes in proportion to Vc.

As the voltage Vc increases, regulator ON time increases and OFF time decreases resulting in an increasing duty cycle. If Vc exceeds its high-limit voltage, Vcmax, the output remains ON and does not turn OFF. This is the 100 percent duty cycle condition which occurs when the output OFF time is zero. This condition will last as long as Vc exceeds Vcmax.

As the voltage Vc decreases, regulator ON time decreases and OFF time increases resulting in an decreasing duty cycle. If Vc becomes less than its low limit voltage, Vcmin, the output remains OFF and does not turn ON. This is the 0 percent duty cycle condition which occurs when the output ON time is zero. This condition will last as long as Vc remains less than Vcmin.

The rated current output of IC1, pin 3, is 200 ma, either sourcing or sinking (ref. 1). This relatively low level of current is generally not enough to directly control the current from a PV array. It is sufficient, though, to control a power control device, such as a transistor or relay. Since the IC1 output can either source or sink output current, it is possible to utilize the same regulator design for a series or shunt control action, as illustrated in figure 8. For series control action, the power control device input would be connected between the IC1 output and the 5 V supply, figure 8(a). The normally open contact would then be connected in series with the array output. For shunt control action, the power control device input is connected from the IC1 output to ground, figure 8(b). The normally open contact is then connected in parallel with the array to shunt the array current to ground.

The nominal operating voltage of the DCR can be changed in two ways. For large scale adjustments (> 3 percent), one or both of the zener diode(s) can be replaced with zener diode(s) having different voltage rating(s). For fine adjustments and calibrations, the potentiometer, R1 can be adjusted. It should be noted that the DCR operating voltage range, corresponding to the Vc range from Vcmin to Vcmax, increases as the wiper of potentiometer R1 is adjusted nearer to ground for a higher system voltage.

A light emitting diode (LED) provides a visual indication of the DCR on and off switching. This provides an indication to an observer that the DCR is operating.

The rated supply voltage for IC1 ranges from 4.5 to 18 V. In most applications of IC1, the supply voltage does not affect the time constant of the circuit. For this application though, a constant supply voltage is needed because of the use of the control voltage terminal to control the duty cycle. This constant voltage supply is provided by the voltage regulator, IC2.

The prototype models of the high-voltage DCR were designed to be add-on components for an existing electromechanical regulator subsystem. There were two design objectives for this version. The first was to interface the DCRs with the existing circuit. The second was to design the DCR etched circuit board to be compatible with the existing circuit hardware. These objectives were met by designing an encapsulated etched circuit board to be mounted on the solid state relays of the existing control subsystem. Figure 9 illustrates the assembled prototype DCR etched circuit board and

the encapsulated DCR. Two through bolts and standoffs were used to electrically and mechanically connect the DCR to the solid state relay.

The final version was designed as an etched circuit board to be plugged into a card cage. Figure 10 illustrates the circuit board and card cage assembly.

DESIGN DESCRIPTION OF THE LOW-VOLTAGE DCR

The low-voltage DCR schematic diagram is shown in figure 11. The voltage sense section consists of IC1 and its associated resistors, R1 through R8. Op-amps A1 and A3 of IC1 are inverting amplifiers that scale and translate the input voltage (Vin) range to the range necessary for the IC2 control voltage input. Op-amp A2 of IC1 utilizes the reference voltage output, Vref, of IC2, to provide a reference for this scaling and translation. Potentiometer R8 provides for adjustment of the positive input to the A3 op-amp to allow for calibration of the DCR. For a DCR in a system with a 12 V lead acid battery, the input voltage range for variable duty cycle operation of the DCR is from 13 to 13.5 V. For an output of 0 percent to 100 percent duty cycle, the IC2 control voltage at pin 13 ranges from Vcmin = 1.2 V to Vcmax = 4.3 V.

The comparator section consists of IC2 (ref. 2) and its associated resistors R9 through R12, capacitors C1 through C5, and diodes D1 and D2. IC2 is a commercial pulse-width modulated switching circuit for switching power supplies. IC2 consists of (among other functions) a comparator and an oscillator. The output of IC2 is a switching waveform with the duty cycle of the waveform being a linear function of the input voltage. The oscillator frequency is set by C4 and R11 to be approximately 0.5 Hz. Diode D1 provides protection for the input of IC2 if the output voltage of A3 exceeds the IC2 supply voltage.

The power switch section consists of Q1, Q2 and R13. The transistors are turned on and off by the output of the comparator section. The collector current rating of Q1 is 16 amps and the collector-emitter voltage is rated at 140 V (ref. 3). Subject to limitations of the safe operating area and adequate power dissipation, Q1 may be used to directly control the array power in a shunt switching arrangement. For series switching control, Q1 may be used to control a relay or another transistor. For higher power applications the power switch section may be replaced with a circuit of adequate power capabilities or Q1 may control a relay or another transistor.

The negative terminal of the voltage sense and comparator sections is kept separate from the negative terminal of the power switch section. This allows remote sensing of the battery voltage by the voltage sensing circuit to obtain a better measurement of the actual battery voltage without power wiring voltage drops. This also allows current measuring shunts to be inserted in several different places in the negative circuit as shown in figure 12.

A light emitting diode, D2, provides a visual indication of the DCR on and off switching enabling an observer to confirm that the DCR is operating.

The nominal operating voltage of the low-voltage DCR can be changed in two ways. For major changes in voltage range, such as from 12 V to 6 V operation, several component values need to be changed. The component values for a 12 V DCR and a 6 V DCR are given in figure 11. For small adjustments such as calibrations, the potentiometer R8 is adjusted. The appropriate voltage and current limits must be examined for IC1 and IC2 for any change in operational voltage, particularly for an increase in voltage range above 25 V.

DCR CALIBRATION

The DCRs are calibrated by adjusting the voltage setpoint potentiometer so that the DCR turns completely off or on at the desired voltage. The procedures for calibrating the high- and low-voltage DCRs are given in tables 1 and 2. A variable voltage source is used to simulate the system voltage. An accurate digital voltmeter is used to measure the voltages during the calibration procedure.

A battery-powered calibrator, figure 13, was constructed for the high-voltage DCR. This calibrator has an output voltage range of 100 to 135 V to simulate the range of voltage of a nominal 120 V PV-battery system. Furthermore, since the high-voltage DCR was constructed as a plug-in etched circuit board, the calibrator was constructed with a plug-in connector for the DCR. This allows the DCR to be removed from the system and connected to a calibrator very quickly and easily without using tools.

The circuit diagram of the setup necessary for calibration of the low-voltage DCR is shown in figure 14. A calibrator similar to the high-voltage DCR calibrator could be constructed for use with low-voltage DCR's.

PROOF-OF-DESIGN TESTS

The prototype high-voltage DCRs were subjected to two types of tests: 1) thermal cycling in the LeRC Reliability and Quality Assurance (RQA) laboratories and 2) system testing in the LeRC Systems Test Facility (STF).

The high-voltage DCRs were originally designed for a project in Upper Volta, West Africa (see Section Grain Mill and Water Pump, Tangaye, Upper Volta). Prior to the initial installation of the high-voltage DCRs in a remote area, the LeRC RQA office tested the DCRs in a thermal-cycling environment. The temperature was cycled from -1° C to 60° C and back to -1° C in a test chamber containing 12 operating DCR's. Each cycle lasted 24 hours and the DCRs were exposed for 96 hours. This test program resulted in only one defective DCR. This defective DCR still operated, but had an operating voltage range for 0 percent to 100 percent duty cycle that was too wide.

The prototype version of the high-voltage DCR was tested as part of the Upper Volta system when that system was undergoing tests in the STF. The DCRs performed satisfactorily during these tests.

Following a field failure of the prototype version (see Section Grain Mill and Water Pump, Tangaye, Upper Volta), the DCR etched circuit board

layout was redesigned. The new DCRs with the card cage assembly and associated circuitry were tested in the STF. The nominal 120 V dc test system was composed of a 3 kWp array, a 48 kWH battery, resistive loads and motor loads. The DCRs and associated equipment operated satisfactorily during these tests.

The low-voltage DCR was originally designed for a remote PV-powered seismic sensing station system in Hawaii (see Section Seismic Sensor, Kilauea Volcano, Hawaii). The DCR was tested in the STF with the complete power system prior to shipment. The system operated satisfactorily during testing.

FIELD APPLICATION OF THE HIGH-VOLTAGE DCR

Grain Mill and Water Pump, Tangaye, Upper Volta

This demonstration PV power and load system is part of a project funded by the U. S. AID. The purpose of the project is to: 1) study the socioeconomic effects of reducing the time required by women in rural areas for drawing water and grinding grain, and 2) demonstrate the suitability of PV technology for use in rural areas by people of limited technical training. The 120 V dc (nominal) system consists of a 3.6 kW (peak) PV array, 64 kWh of battery storage, instrumentation, automatic controls and a data collection system (ref. 4). The PV system supplies power to a grain mill, water pump and fluorescent lights in the mill building and in an adjacent community building.

The voltage control system was designed around a programmable electromechanical drum relay (DP). A portion of the control subsystem circuit diagram is shown in figure 15. During testing of the system at LeRC in September 1978, six DCRs (DCR1-DCR6) were incorporated into the control subsystem to function as a back-up regulator.

In March 1979, during installation activities, the original DCRs were damaged due to arcing inside the encapsulation. The arcing was apparently caused by a short between the 120 V dc bus and the 12 V dc bus. It is unknown whether the short was internal or external to the DCRs, but the 12 V bus was apparently brought to a high voltage (possibly close to 120 V) which destroyed a number of components in the DCRs as well as igniting the epoxy encapsulant.

The etched circuit board layout was modified and new DCRs were fabricated and installed in August, 1979. These DCRs have been used as the primary voltage regulators since August 1979.

Originally each DCR controlled two solid state relays (CR1-CR12), each relay switching one array string. The array was doubled in size to its present 3.6 kW in May of 1981. Presently, each DCR controls four array strings using the same two solid state relays. The switch S4 (fig. 15) selects either the DP or the DCRs as the active regulator.

Each DCR is a complete regulator and is separate from the other five. The exact duty cycles, frequencies and phases of the six are, therefore, all

independent. Each of the six DCRs are also calibrated slightly different from the others. This results in the six DCRs switching the array strings in a random fashion which tends to smooth out switching transients in the total array current.

The replacement DCRs installed in this system have operated without problem since August 1979.

Lone Pine Visitor Center, Lone Pine, California

The Lone Pine Visitor Center serves 14 member agencies of the Interagency Committee for Owens Valley Land and Wildlife. The PV system was installed as part of a demonstration project funded by DOE to power a drinking water cooler for visitors. The 120 V dc (nominal) system consists of a 540 W (peak) PV array, 16.2 kWh of battery storage, instrumentation and automatic controls.

The original regulator for this system was a shunt zener design. After operating for one year, the zener circuit was replaced with a high-voltage DCR operating in a shunt mode. A portion of the system schematic is shown in figure 16. The solid state relays switch the power resistors across the array to reduce the array voltage significantly below that of the battery. This back biases the array blocking diode and reduces to zero the array current to the battery and the load. When the solid state relays are turned off, full array current goes to the battery and loads. For redundancy, two solid state relays were used to switch the power from the array.

This DCR has operated without problem since November 1978.

Grain Mill and Earth Station Demonstrator at
UNISPACE 82 Conference, Vienna, Austria

The Second United Nations Conference on the Exploration and Peaceful Uses of Outer Space (UNISPACE 82) took place in Vienna, Austria in August 1982. This conference addressed the benefits and practical applications of space technology, especially as they apply for developing countries. The U.S. AID Rural Satellite Program (RSP) had an exhibit at the conference to demonstrate the RSP to the participating countries. As an adjunct to the RSP exhibit, a PV power system was constructed for powering a satellite earth station. The earth station was assembled at the conference site but was not powered for the demonstration due to licensing problems and a change in scope for the RSP conference exhibit. A grain mill identical to the mill used in the Tangaye project was used instead to demonstrate a PV system at the conference. This system also supplied 120 V ac for power tools used to set up and take down the exhibit.

The 120 V dc system consisted of a 1.2 kW (peak) array, an 11 kWh battery, an inverter and automatic controls. The system schematic is shown in figure 17. The controls section contained five high-voltage DCRs, four of which controlled three strings with the fifth controlling four strings. The DCRs actuated solid state relays (K1-K5) which controlled the strings by series switching. The system also had high- and low-voltage sensing relays (K6, K7) for battery and system protection from voltage extremes should the DCRs or SSRs fail.

The system operated satisfactorily during checkout tests at NASA Lewis during June and July, 1982 and during the UNISPACE 82 conference in August, 1982. The PV system and grain mill were returned to LeRC after the conference ended.

In December 1983, the PV system and grain mill were shipped to Bamako, Mali. The system will be installed in a village near Bamako as part of a demonstration project similar to the project in Tangaye, Upper Volta.

FIELD APPLICATIONS OF THE LOW-VOLTAGE DCR

Seismic Sensor, Kilauea Volcano, Hawaii

The Hawaii Volcano Observatory, a part of the U.S. Geological Survey in the Department of the Interior, has a network of seismic stations located around the various volcanoes on the Hawaiian islands. This network provides volcanic prediction research and evacuation warnings for residents. These stations typically have been powered by primary electrochemical cells due to the low operating power requirement of the station and the requirement for no vibration from rotating generators. In an effort to assess photovoltaics as a method of reducing maintenance requirements of battery powered stations, LeRC designed and installed a PV system in 1980 to power the seismic instruments and the radio reporting system at one of the remote stations.

The plus and minus 12 V dc system consists of a 37.2 W (peak) array, a 1.8 kWh battery and automatic controls, figure 18. Two low-voltage DCRs were used in the system to control the array power. Each of the DCRs had a current shunt in the emitter circuit of the power switch section for measuring the shunted array current. The two regulators were calibrated separately and operate independently of each other.

The PV system and DCRs have operated without problem since the system was installed in January, 1980.

Outdoor Area Light Demonstrator at Unispace 82 Conference, Vienna, Austria

A PV-powered 18 W sodium vapor outdoor lamp system was assembled in 1982 for possible use in a future demonstration project. The schematic diagram of the system is shown in figure 19. The 12 V dc system consists of a 132 W (peak) array, a 2.5 kWh battery and a low-voltage DCR.

This system was used in the UNISPACE 82 conference in Vienna, Austria in August 1982 as part of the NASA Lewis PV demonstration. Again, the DCR performed satisfactorily.

Vaccine Refrigerator/Freezer System Test, NASA Lewis, Cleveland, Ohio

LeRC is field testing three different models of PV-powered vaccine refrigerator-freezers for the Centers for Disease Control, DOE and U.S. AID in a number of Third World countries. In conjunction with the field tests, LeRC is conducting parallel laboratory endurance tests on each of the units.

The 12 V dc system for one of the refrigerator-freezers consists of a 460 W (peak) array, a 5 kWh battery and a low-voltage DCR. The low-voltage DCR activates power relays to control the array power, as shown in figure 20. The arrangement of relays and their contacts were dictated by fail safe concerns and available wiring between the test area and the existng roof mounted arrays.

The initial installation resulted in unstable operation of the DCR. This was traced to voltage drops in the cables between the voltage sense circuit of the DCR and the battery. By installing a remote voltage sensing line between the battery and the DCR, this problem was solved.

This system has been operating satisfactorily since February 1983.

SUMMARY

The two types of PV system voltage regulators described here have been shown to be simple, versatile and reliable. Both types of DCRs are constructed from "off-the-shelf" components and employ straightforward designs. The use of these regulators simplifies system design and facilitates the stocking of replacement regulators for field use. The 35 regulator-years of successful operation in a number of vastly different application environments demonstrates the reliability of the regulators.

REFERENCES

1. Linear Data Book. National Semiconductor Corporation, (Santa Clara, CA), 1976.

2. Ferranti Semiconductors-Switching Regulator Control and Drive Unit. ZN1066E, ZN1066J, Ferranti Electric, Inc., Semiconductor Products, Plainview, NY, 1977.

3. Semiconductor Data Handbook. Second edition, General Electric Company, Semiconductor Products Dept., (Syracuse, NY), 1973.

4. Martz, J. E.; and Ratajczak, A. F.: Design Description of the Tangaye Village Photovoltaic Power System NASA TM-82917, 1982.

TABLE 1. - CALIBRATION INSTRUCTIONS FOR THE HIGH-VOLTAGE DUTY CYCLE REGULATOR

Calibration with DCR Calibrator

1. Insert the DCR in the edge connector of the calibrator.

2. Connect voltmeter to test points on calibrator.

3. Turn calibrator ON/OFF switch on.

4. Adjust calibrator potentiometer so that the voltage is at the high-voltage setpoint desired.

5. Adjust the DCR potentiometer until the DCR LED just turns on and remains on or slightly blinks off.

6. Adjust the calibrator potentiometer down until the DCR LED just turns off or is slightly blinking on.

7. The voltage of step 6 should be only approximately 5 V below the voltage of step 4 for a properly operating DCR.

TABLE 2. - CALIBRATION INSTRUCTIONS FOR THE LOW-VOLTAGE DUTY CYCLE REGULATOR

1. Calibration with DCR disconnected.

   1.1 Connect a 0-20 Vdc voltage source (100 ma capability) and a digital voltmeter (DVM) to TB2-3 (+) and TB2-4 (-) as shown in figure 11.

   1.2 Adjust the voltage source to the maximum desired voltage of the system battery.

   1.3 Move the positive lead of the DVM to the test point (TP).

   1.4 Adjust the DCR potentiometer until the test point voltage is 4.30 V. The DCR light emitting diode (LED) should be on continually or just faintly blinking.

   1.5 Reconnect the positive lead of the DVM to TB2-3.

   1.6 Adjust the voltage source voltage down until the DCR LED goes off completely and stays off. Gradually increase the voltage source until the LED justs blinks on. Record the voltage of the voltage source.

   1.7 The difference between the maximum battery voltage of step 1.2 and the minimum voltage recorded in step 1.6 should be approximately 0.5 V for a 12 V regulator and approximately 0.25 V for a 6 V regulator.

   1.8 Disconnect the voltage source and the DVM.

2. Calibration with the DCR connected in a circuit.

   2.1 Remove power from the system to the DCR.

   2.2 Disconnect and insulate the wire connected to TB2-3 on the DCR. CAUTION: the voltage source used should be isolated from the circuit of the system that contains the DCR.

   2.3 Proceed with steps 1.1 through 1.8.

   2.4 Reconnect the wire to TB2-3 on the DCR.

   2.5 Reconnect power in the system to the DCR.

   2.6 System is now operational.

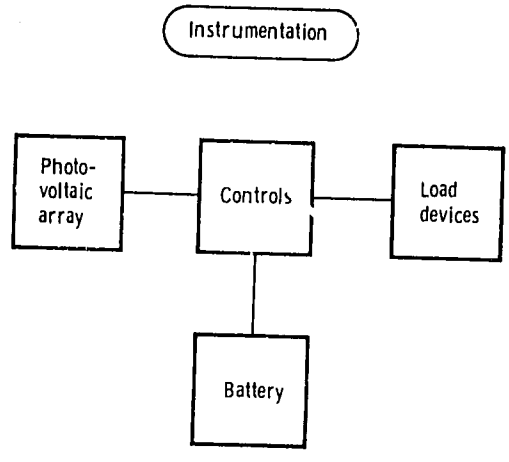

Figure 1. - Stand alone photovoltaic system block diagram.

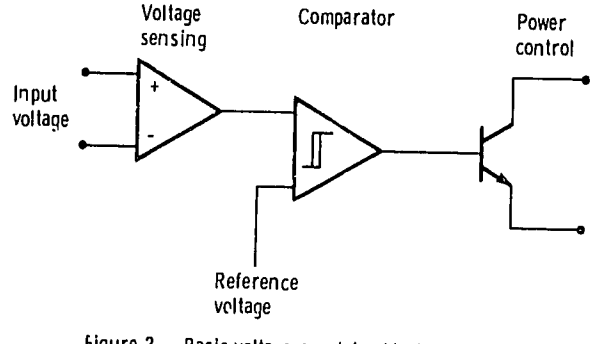

Figure 2. - Basic voltage regulator block diagram.

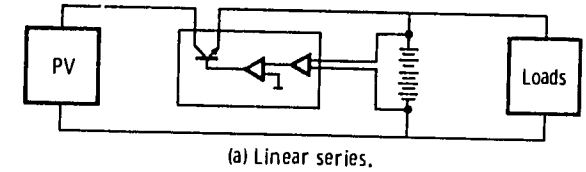

(a) Linear series.

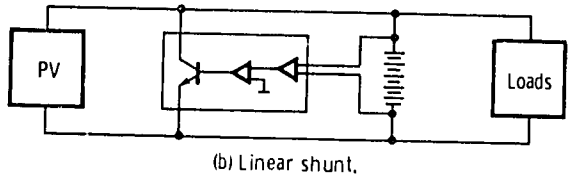

(b) Linear shunt.

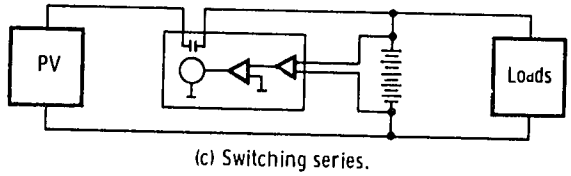

(c) Switching series.

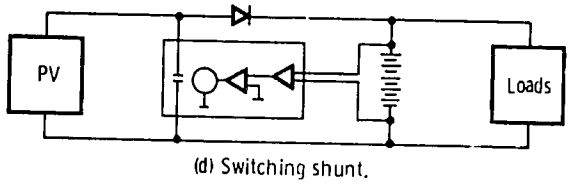

(d) Switching shunt.

Figure 3 - Classification of common photovoltaic system voltage regulators

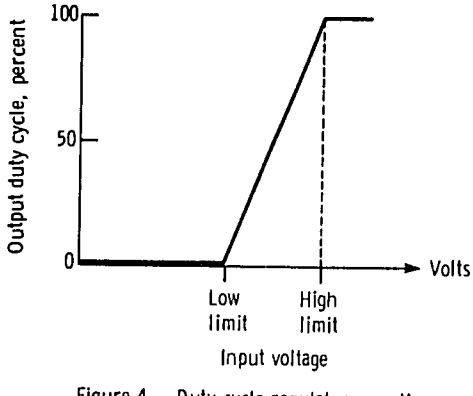

Figure 4. - Duty cycle regulator operating characteristics.

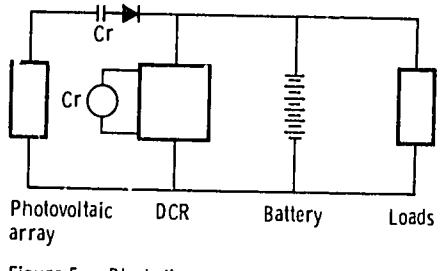

Figure 5. - Block diagram of a typical photovoltaic system utilizing a duty cycle regulator.

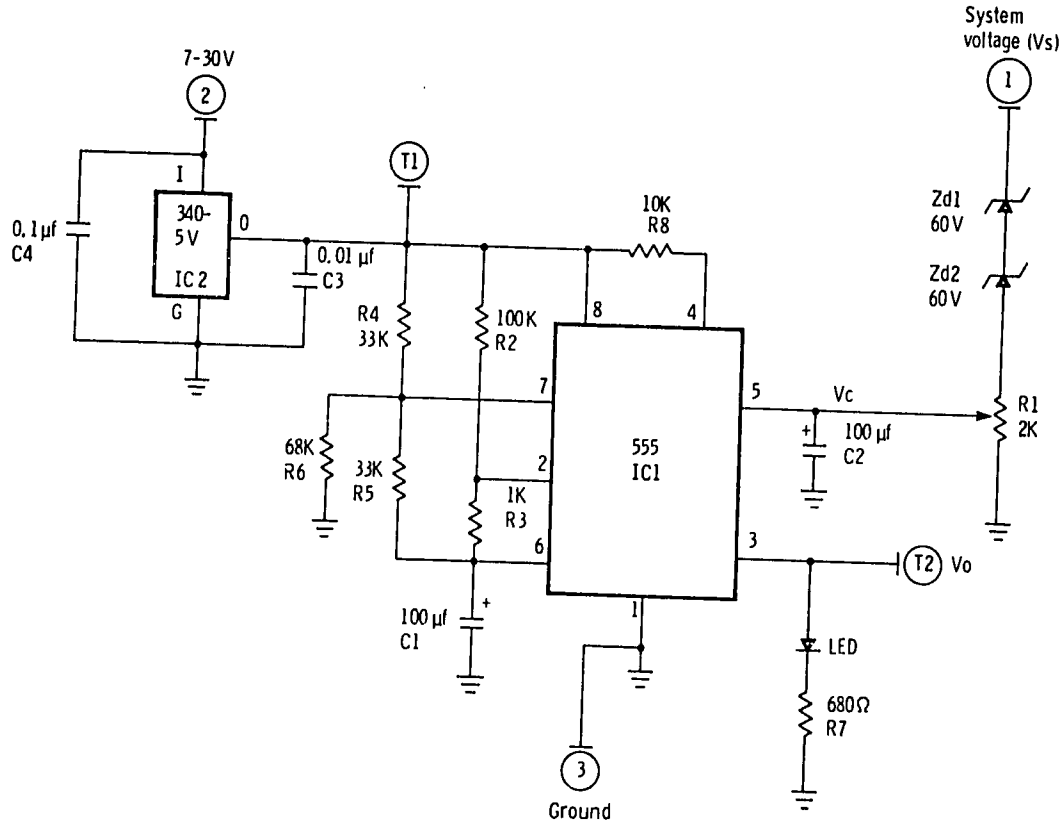

Figure 6. - High voltage duty cycle regulator circuit diagram.

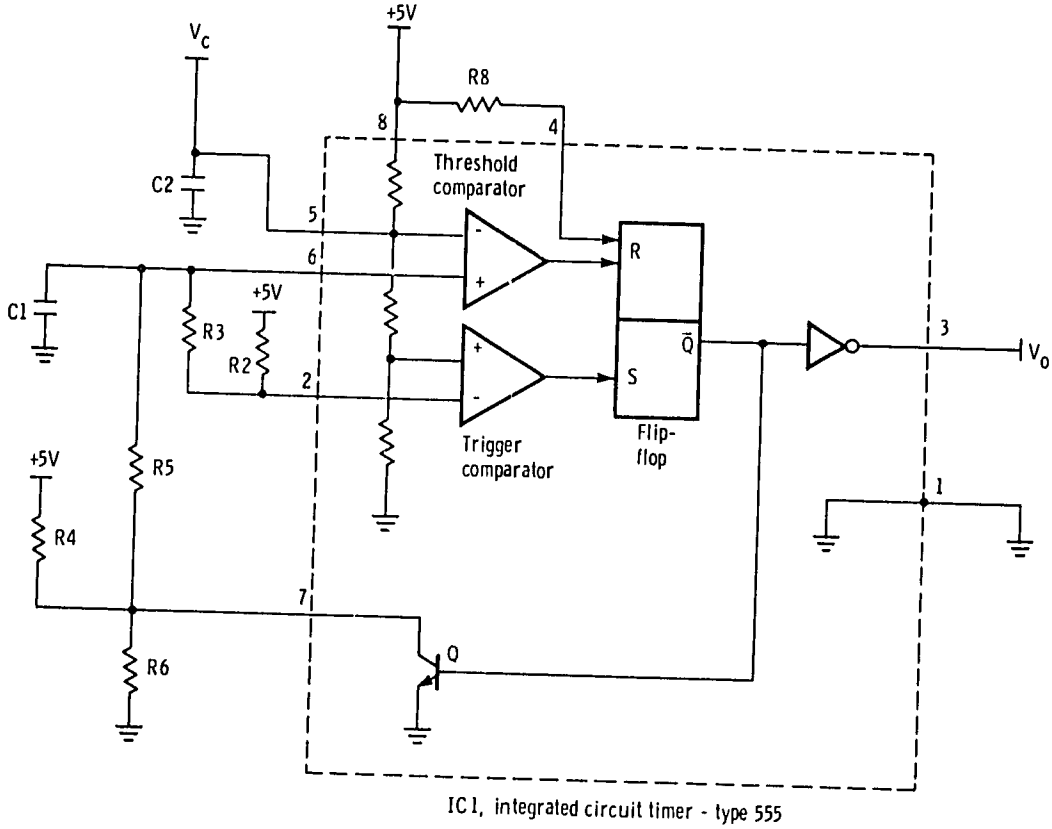

IC1, integrated circuit timer - type 555

Figure 7. - High voltage duty cycle regulator circuit diagram (details).

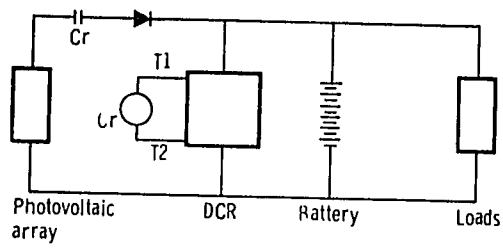

(a) Series control.

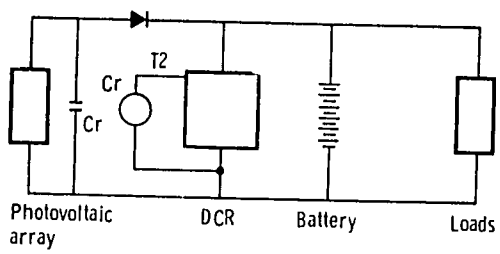

(b) Shunt control.

Figure 8. - Series and shunt duty cycle regulator configurations.

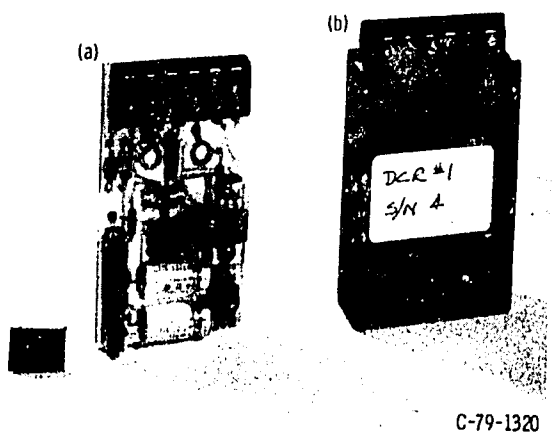

(a) Etched circuit board.
(b) Encapsulated etched circuit board.

Figure 9. - Prototype high voltage duty cycle regulator.

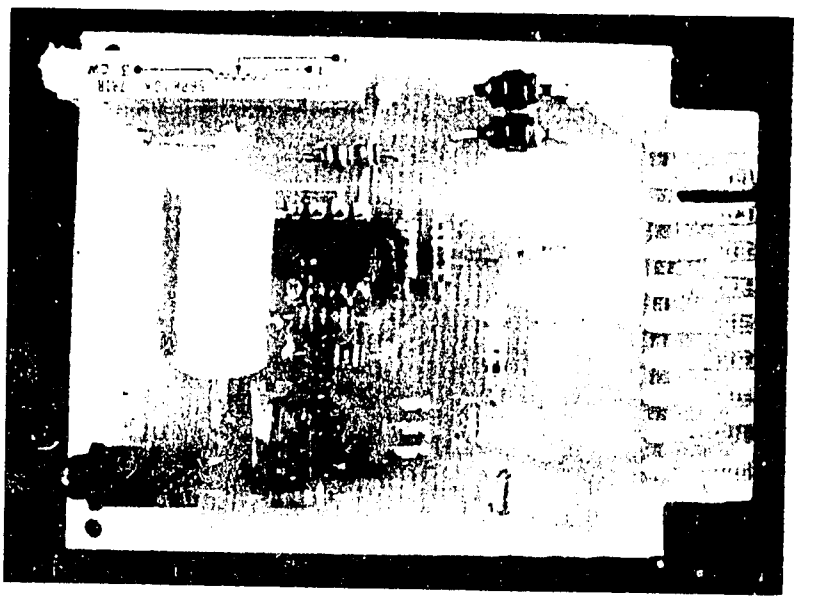

(a) Etched circuit board.

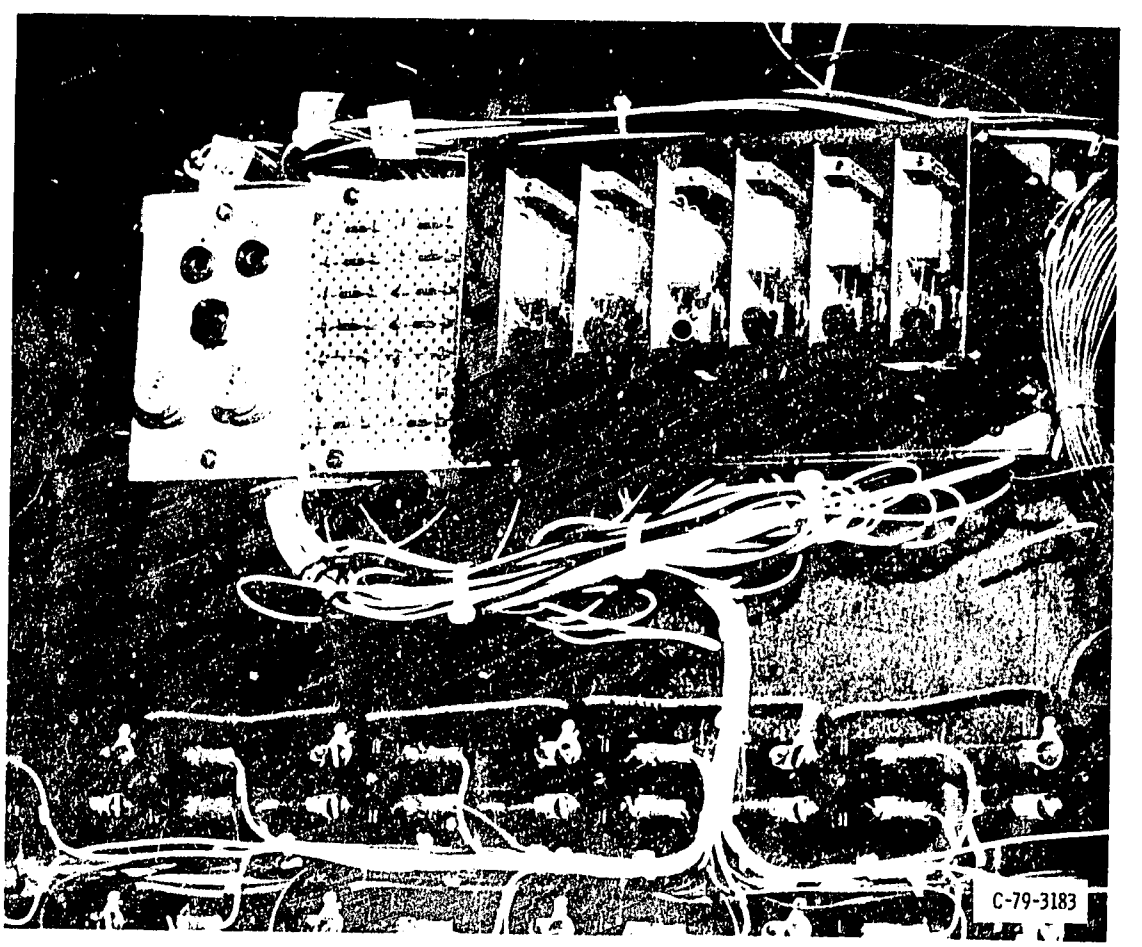

(b) Card cage assembly.

Figure 10. - Redesigned high voltage duty cycle regulator.

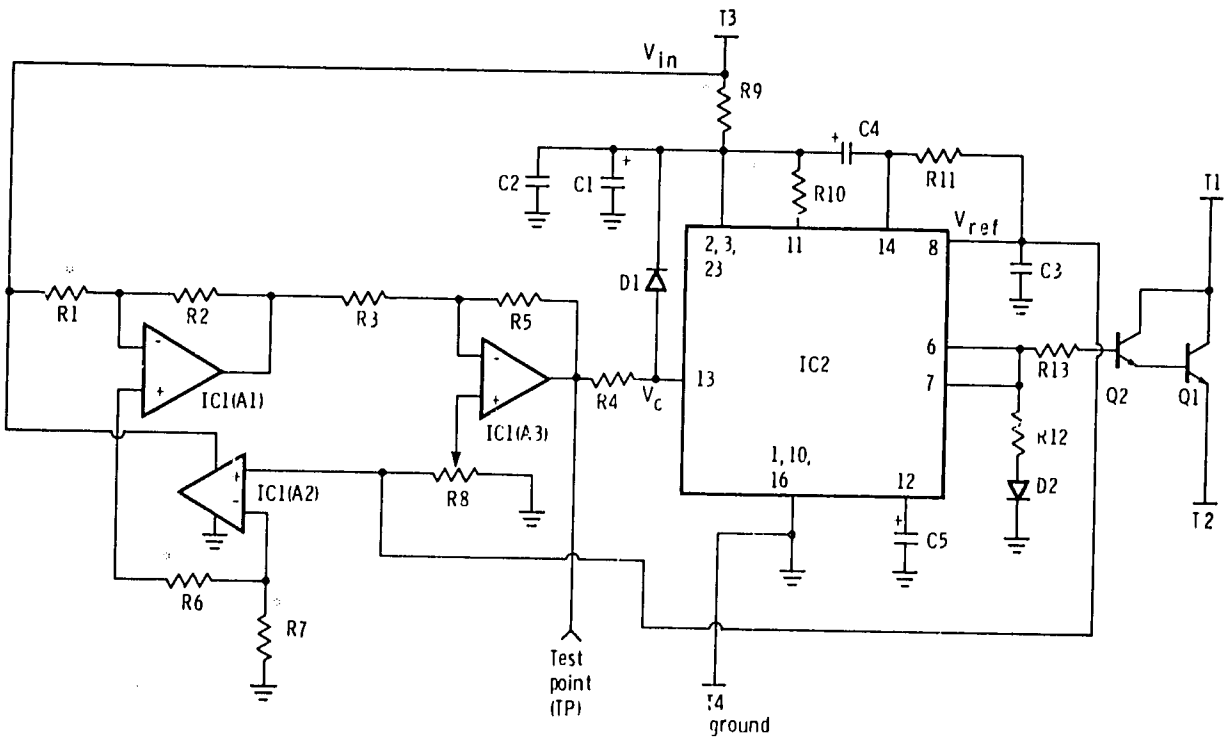

Parts list				*System voltage dependent resistors	6V System	12V System
IC1	LM 324	C1	100 µf			
IC2	ZN 1066	C2	0.22 µf			
Q1	2N3773	C3	0.22 µf	R1	10KΩ	20KΩ
Q2	2N2657	C4	60 µf	R6	4.7KΩ	5.6KΩ
R2, R3	10KΩ	C5	20 µf	R7	6.8KΩ	4.7KΩ
R4	1KΩ	D1	IN 3613	R9	33Ω, 1W	180Ω, 2W
R5	56KΩ	D2	L.E.D.	R10	470KΩ	330KΩ
R8	10KΩ POT., 10 turn					
R11	100KΩ					
R12	1KΩ					
R13	390Ω					

Notes:
All resistors are 1/4 W except where indicated
All capacitors are 50V

Figure 11. - Low voltage duty cycle regulator circuit diagram.

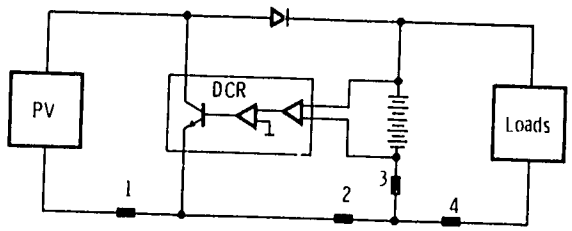

Current shunt	Measured parameter
1	Total array current
2	Array current to system
3	Battery current
4	Load current

Figure 12. - Current measuring shunt locations possible with shunt-type low voltage duty cycle regulator.

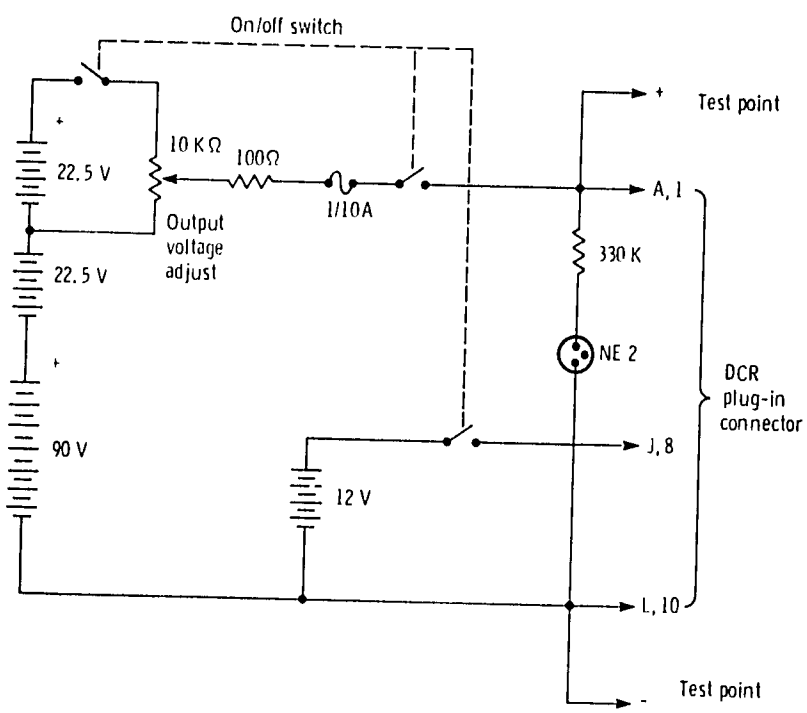

Figure 13. - High voltage duty cycle regulator calibrator.

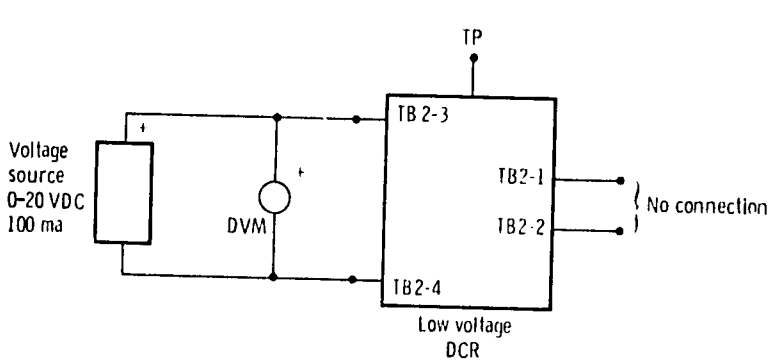

Figure 14. - Calibration set-up for the low voltage duty cycle regulator.

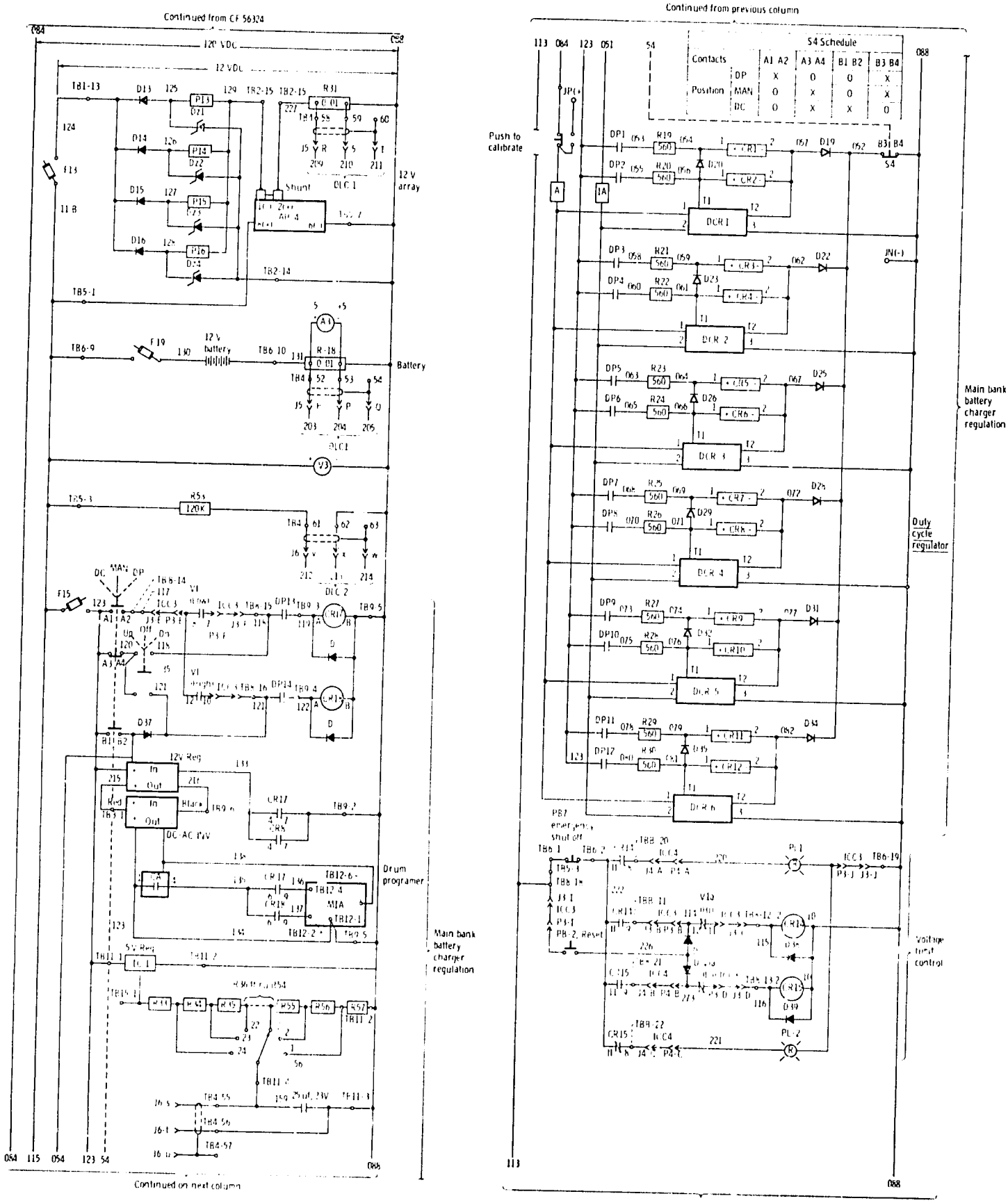

Figure 15. - Partial Tangaye control subsystem schematic diagram (ref. 2).

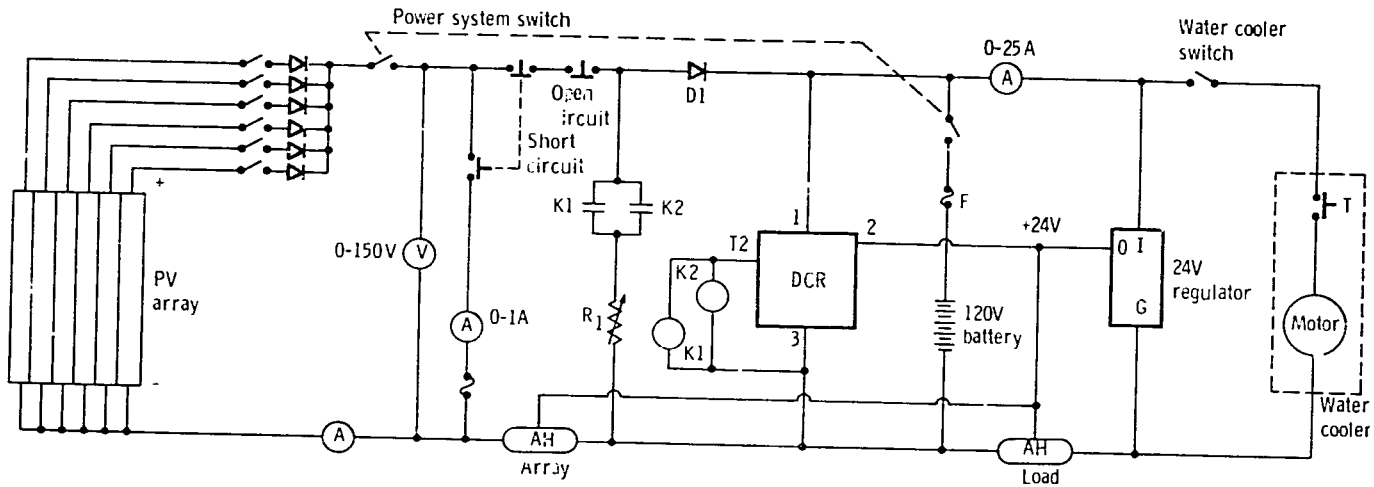

Figure 16 - Lone pine system schematic diagram (simplified)

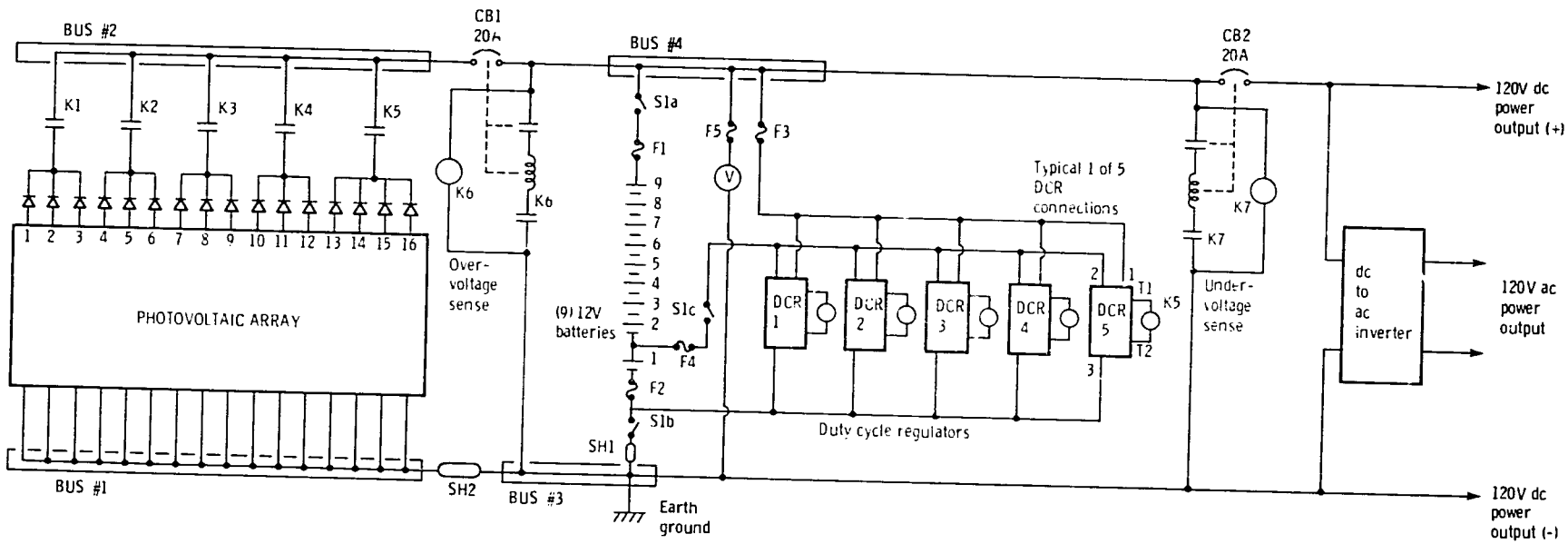

Figure 17. - Unispace 82 system schematic diagram.

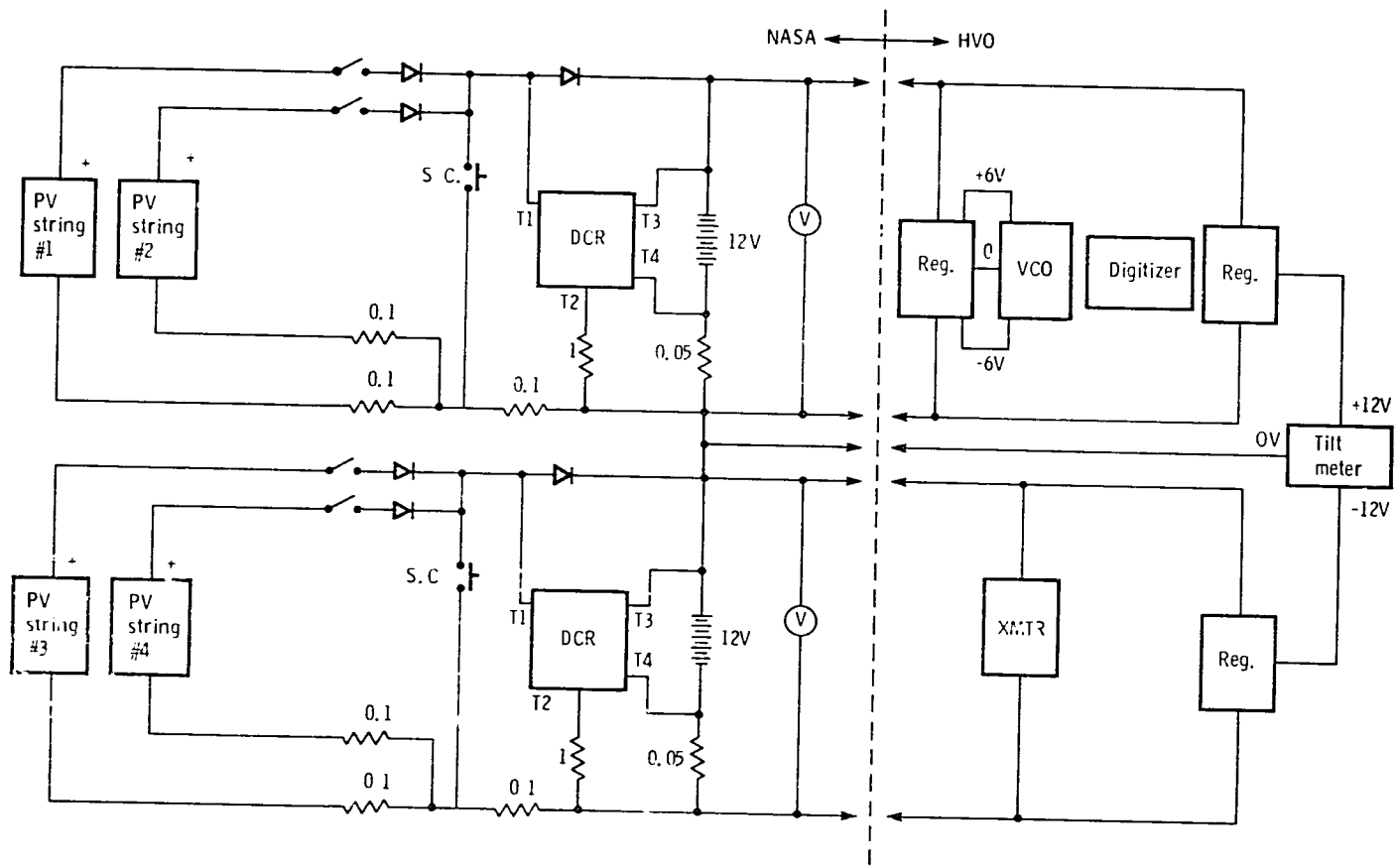

Figure 18. - Hawaii volcano observatory system schematic diagram (simplified).

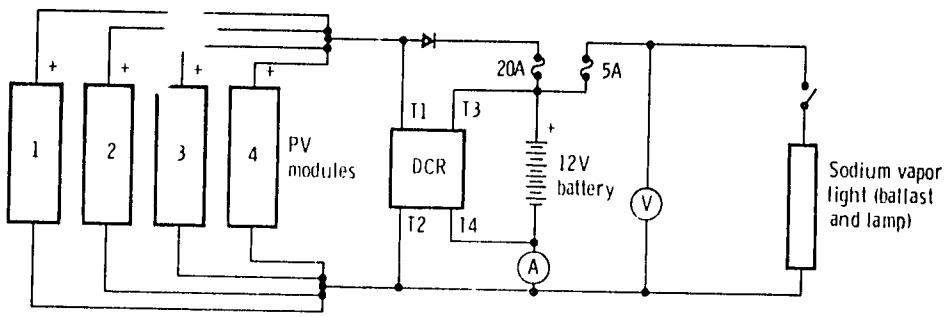

Figure 19. - Outdoor-area light demonstrator system schematic diagram.

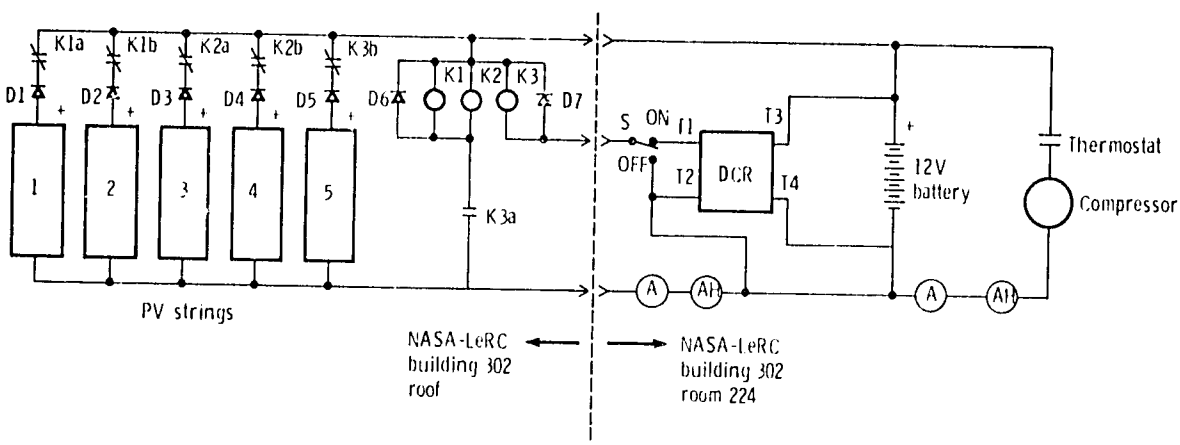

Figure 20. - Photovoltaic-powered refrigerator-freezer system schematic diagram.

1. Report No.	2. Government Accession No.	3. Recipient's Catalog No.
NASA TM-83625		

4. Title and Subtitle	5. Report Date
Low-Frequency Switching Voltage Regulators for Terrestrial Photovoltaic Systems	May 1984
	6. Performing Organization Code: 776-54-01
7. Author(s): Richard DeLombard	8. Performing Organization Report No.: E-2060
	10. Work Unit No.
9. Performing Organization Name and Address: National Aeronautics and Space Administration, Lewis Research Center, Cleveland, Ohio 44135	11. Contract or Grant No.
	13. Type of Report and Period Covered: Technical Memorandum
12. Sponsoring Agency Name and Address: U. S. Department of Energy, Division of Photovoltaic Energy Technology, Washington, D. C. 20545 and U.S. Agency for International Development, Office of Energy, Washington, D. C.	14. Sponsoring Agency ~~Code~~ Report No.: DOE/NASA/20485-16

15. Supplementary Notes

Prepared under DOE Interagency Agreement DE-AI01-79ET20485 and AID Interagency Agreement PASA-NASA/DSB-5710-2-79.

16. Abstract

The NASA Lewis Research Center (LeRC) is managing both the Photovoltaic Technology Project for the Agency for International Development and the Stand-Alone Applications Project for the Department of Energy. LeRC designed, fabricated and laboratory-tested two types of low-frequency switching type regulators. Sixteen of these regulators were subsequently built and installed in a variety of stand-alone field test systems located in Africa and the U.S. This report describes the design, operating characteristics and field application of these regulators. These regulators are small in size, low in cost, very low in power dissipation, reliable and allow considerable flexibility in system design.

17. Key Words (Suggested by Author(s))	18. Distribution Statement
Photovoltaic Terrestrial power systems Voltage regulators Switching	Unclassified - unlimited STAR Category 33 DOE Category UC-63d

19. Security Classif. (of this report)	20. Security Classif. (of this page)	21. No. of pages	22. Price*
Unclassified	Unclassified		A02

*For sale by the National Technical Information Service, Springfield, Virginia 22161

24