Institut Pertanian Bogor * University of Wisconsin

GRADUATE EDUCATION PROJECT

Aid Project 497-0290

Report No. 24

AHEARN

1

PN-AAI-180

ISN-45527

IPB/UW GRADUATE EDUCATION PROGRAM

REMOTE SENSING PROJECT

by

Sean C. Ahearn

Institute for Environmental Studies

University of Wisconsin

Madison, Wisconsin 53706

Introduction

Three issues were addressed in the first phase of the remote sensing project during the time period of June 1, 1983 to August 6, 1983. They include: curriculum development, personnel exchange, and the development of a remote sensing lab.

The following series of papers describe the activities and review proposed material that relates to the three issues described above.

Curriculum development is discussed in the context of personnel exchange in the first paper. This is followed by a preliminary outline of a course being developed in Photogrammetry at the S_1 level. A detailed description of the IBM based computer system being developed at IPB for natural resourse inventory and management is given in the last paper.

Status of Project

The report on the "Workshop in Remote Sensing Curriculum Development at IPB" lists proposed courses and target dates for the aquisition of each course. The workshop is the culmination of material prepared during the first phase of the project.

Aquisition of proposed courses began during Phase I of the remote sensing project with the work done by Sean C. Ahearn and Soedari Hardjopayitno on the S-1 Photogrammetry Course. It is continuing with the transfer of two IPB staff members to the University of Wisconsin for the academic year 1983/1984.

During their stay, they will concentrate on the aquisition of three courses for integration into the IPB remote sensing curriculum. Other staff members who are interested in curriculum development have been identified (Workshop Report) that might spend time at Wisconsin or at other institutions to aquire other proposed courses in the coming years.

The IBM digital image processing system reviewed in the last paper of this report has been ordered. Development of the software of the system will be done in Wisconsin by a joint IPB/UW team during the 83/84 academic year.

By June of 1984 the IBM system will have been sent to IPB along with the software that was developed during the second phase of the project (September 1983 - June 1984). The two staff members will be returning to IPB to begin implementation of the courses acquired during their stay in Wisconsin.

Preliminary Proposal S_2 Curriculum in Remote Sensing at IPB

Sean C. Ahearn

University of Wisconsin

Introduction:

Development of the S_2 Remote Sensing curriculum at IPB was initiated by a joint IPB/UW team in June of 1983. The following is a preliminary outline of courses to be offered and the mechanism for training and acquisition of new courses. A brief explanation of each course is given along with three sample curriculum.

The courses emphasize not only remote sensing technique but also how remote sensing is used as an input into geographic information systems (GIS) and subsequent natural resource system models (NRSM).

System Diagram

An overview of the scope and direction of curriculum development is shown in Figure 1. Remote sensing is integrated with the fields of photogrammetry, geography and cartography to provide data input, geometric consistancy, and geographic reference for a geographic information system. The GIS is the primary input for interdisciplinary natural resource modeling. Course development is designed to follow the flow of this model.

Curriculum Development - System Digital

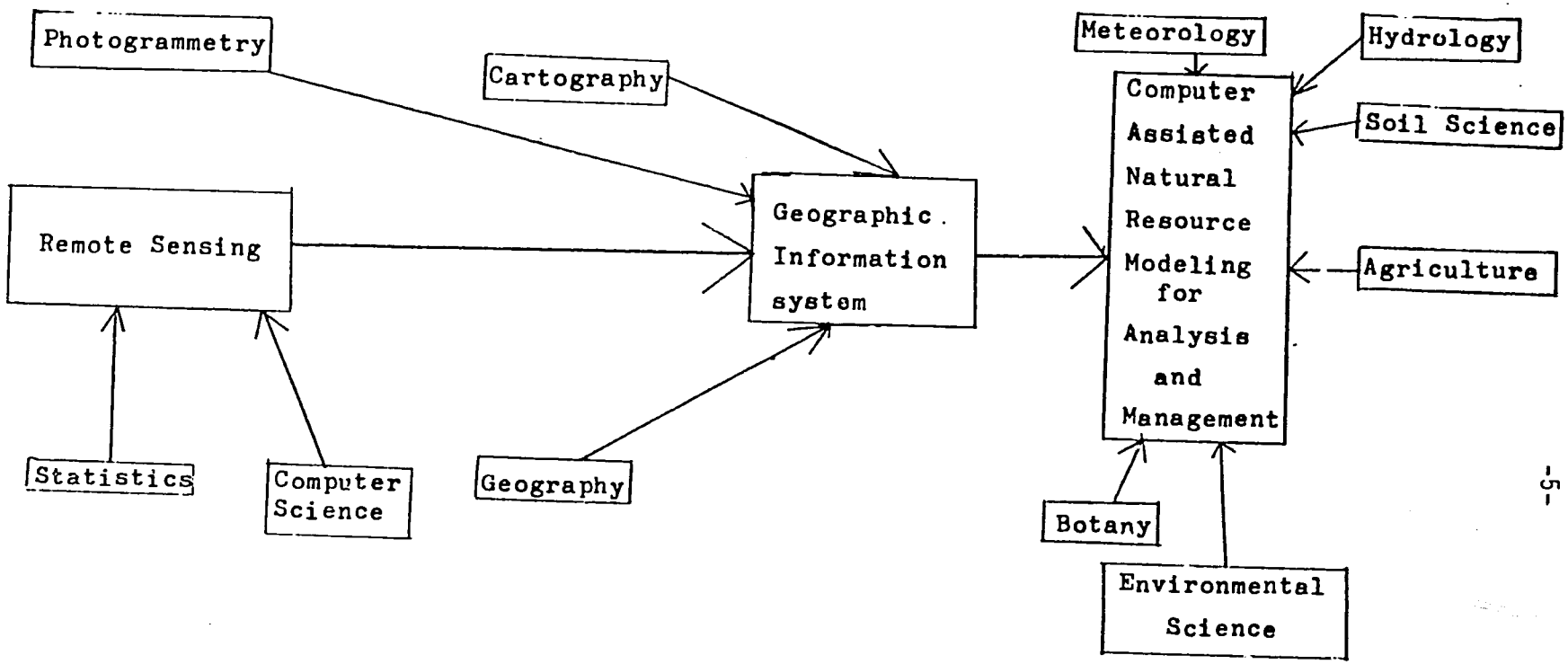

Figure 1

Curriculum

The objective of the remote sensing curriculum is to instruct the student in remote sensing techniques and applications of remote sensing to their field of study. It is also aimed at increasing the interdisciplinary skills and knowledge of the student.

Three possibilities are suggested:
A remote sensing concentration, a photogrammetry/remote sensing concentration and a geographic information system/natural resource system modeling concentration. All three concentrations will finish with a synthesis course that permits the students to discuss their research ideas with fellow students and faculty, and requires a written and oral presentation of their proposal. The proposed course list is shown in Table 1.

Course Development

Course development will occur over a three to five year period as part of the joint IPB/UW graduate program. The program will consist of IPB staff members going to UW to work with a counterpart in developing a particular course.

Each staff member would be given three tasks:

1) Pursue course work that would contribute to the development of the assigned courses including completion of a detailed outline.
2) Take courses for personal-degree objectives.
3) Develop research proposals for their degree program.

The UW counterpart would work with the IPB staff member, and assist in course development and research advising. At the end of this period the

IPB/UW team would return to Indonesia for further development of the course in the context of the IPB setting.

Curriculum Development - IBM Computer System

The IBM computer system being developed by the IPB/UW remote sensing team will play an important role in curriculum development. Courses that use the computer system are noted in Table 1.

Development of the computer system will parallel development of curriculum, both of which follow the system diagram in Figure 1.

The computer system will act as an educational tool for laboratory work and as a research tool for the development of remote sensing, GIS, and resource system modeling. These activities will complement each other because models and computer programs developed for research can be implemented in course curriculum.

TABLE 1

COURSE OFFERING

Level	
S_1 - 420	Airphoto Interpretation - Soils
S_1 - 421	Airphoto Interpretation - Forestry
S_1 - 410	Photogrammetry
S_1 - 440	Cartography
S_2 - 510*	Advanced Photogrammetry
S_2 - 610*	Analytic Photogrammetry
S_2 - 530*	Geodesy
S_2 - 515	Airphoto Interpretation - Terrain Evaluation
S_2 - 517	Vegetation/Land Cover Analysis
S_2 - 520	Principles of Remote Sensing
S_2 - 501*	Instrumentation
S_2 - 540	Principles of Geographic Information Systems
S_2 - 620*	Digital Image Processing
S_2 - 625*	Application of Multivariate Statistics to Digital Image Processing
S_2 - 628*	Accuracy Assessment
S_2 - 629*	Sampling Design
S_2 - 740*	Computer Assisted Natural Resource Management and System Modeling - Forestry - Geology - Botany - Geography - Hydrology - Agriculture - Soils - Meteorology -Land Use Suitability
S_2 - 840*	Synthesis Course Remote Sensing -- GIS -- Natural Resource System Modeling

*Courses that use the IBM computer system

Course Description S_1

Level

S_1 - 420 Airphoto Interpretation - Soil:

Four topics are covered. Basic introduction to serial photographs and stereoviewing, principles of manual interpretation, application of airphoto interpretation to soil science and an introduction to remote sensing principles.

S_1 - 421 Airphoto Interpretation - Forestry:

The course is presented in four parts. The first two parts will be similar to 420 with the third being the application of airphoto interpretation to forestry. The fourth part is an introduction to remote sensing principles.

S_1 - 410 Photogrammetry:

Principles of photogrammetry are covered in detail including: optics for photogrammetry, aerial cameras, photographics measurement and refinement, vertical photographs. A conceptual overview will be given for stereoscopic ploting, relative orientation, and aerotriangulation.

S_1 - 440 Cartography:

Principles of cartography including mapping units, map compilation and geographic referencing of data.

Course Description S_2

Level

S_2 - 515 Airphoto Interpretation - Terrain Evaluation

Five topics are covered. A basic introduction to aerial photographs and stereoviewing, the principle of manual interpretation, classification systems for terrain evaluation, application of airphoto interpretation to terrain evaluation, and an introduction to remote sensing principles.

S_2 - 517 Airphoto Interpretation - Vegetation/Land Cover Analysis

The course is presented in five parts. The first two parts are similar to 515. The third part is a review of classification systems for vegetation/land cover analysis, followed by the application of airphoto interpretation to vegetation/land cover analysis, and an introduction to remote sensing principles.

S_2 - 629 Sampling Design

Statistical techniques are reviewed for sampling design, including single stage and multistage methods.

S_2 - 510 Advanced Photogrammetry

A detailed view of Stereo plotting, titled photographs, Space Resection, Space Intersection and aerotriangulation.

Requirements: 410, 501.

S_2 - 610 Analytical Photogrammetry

Explores in depth numerical methods of aerotriangulation. Requirements: 510.

S_2 - 530 Geodesy

The course includes: the principles of the geoid, mathematical map projections, and map transformations.

S_2 - 520 Principles of Remote Sensing

Subject material will include energy interaction with the earth, radiometric characteristics of aerial photographs, aerial thermography, multispectral scanners, radar, spectral pattern recognition, and remote sensing from space.

S_2 - 620 Digital Image Processing

Principles of digital image processing including preprocessing, enhancement, and classification are analysed. Handson experience is gained through computer interaction. Requirements: 501, 520.

S_2 - 625 Application of Multivariate Statistics to Digital Image Processing

Material will cover principle components analysis, discriminant analysis, classification, and cluster analysis. Computer analysis of the statistical techniques are included. Requirements: 620.

S_2 - 628 Accuracy Assessment

Accuracy analysis techniques for assessing digitally processed remote sensing data are analysed.

S_2 - 540 Geographic Information Systems for Natural Resource Management

Material will include data types, data storage, and geographic referencing-map transformation. Requirements: 501.

S_2 - 740 <u>Courses:</u> Computer Assisted Natural Resources Management and Systems Modeling

- Forestry
- Botany
- Hydrology
- Soils
- Geology
- Geography
- Agriculture
- Meteorology
- Land Use Suitability

These courses will be based on models developed by staff members in the various fields and will be taught by the developers of the models. They will be given in three parts: the conceptual basis for modeling, review of present models, and analysis of a specific model related to the students field of study.

Requirements: 501, 520, 540.

S_2 - 840 Synthesis Seminar

Students will given the chance to integrte their knowledge of Remote Sensing, Geographic Information Systems, and Natural Resource Systems Modeling for development of a thesis proposal. Course will include an example of the integration process, presentation of research ideas, and a final research proposal.

Requirements: 740.

SAMPLE CURRICULUM OPTIONS

1. Concentration in Remote Sensing
2. Concentration in Photogrammetry/Remote Sensing
3. Concentration in Geographic Information System/Natural Resource System

I. Concentration in Remote Sensing

Sample Curriculum

Semester	Course
1	520 - Principles of Remote Sensing
	501 - Instrumentation
	515 - Airphoto Interpretation - Terrain Evaluation
2	620 - Digital Image Processing
	625 - Statistics - Digital Image Processing
	540 - GIS
3	628 - Accuracy Assessment
	740 - Computer Assisted Natural Resource System Modeling
	- Discipline
4	- Synthesis Course
	- Research Proposal --- Preliminary Analysis
	- Field Work
5	- Analysis and Writing: Thesis

II. Concentration in Photogrammetry/Remote Sensing

Sample Curriculum

Semester	Course
1	520 - Principles of Remote Sensing
	501 - Instrumentation
	510 - Advanced Photogrammetry
2	610 - Analytic Photogrammetry
	530 - Geodesy
	517 - Airphoto Interpretation - Vegetation/Land Cover Analysis
3	540 - Principles of GIS
	620 - Digital Image Processing
	- Descipline
4	840 - Synthesis Course
	- Field Work
5	- Analysis and Writing: Thesis

III. Concentration GIS/Natural Resources System

Sample Curriculum

Semester	Course
1	520 - Principles of Remote Sensing
	515 - Airphoto Interpretation - Terrain Analysis
	540 - Principles of GIS
2	501 - Instrumentation
	530 - Geodesy
	- Descipline
3	620 - Digital Image Processing
	- Descipline
	740 - Computer Assisted Natural Resource Systems Modeling
4	840 - Synthesis Course
	- Field Work
5	- Analysis and Writing: Thesis

Proposed Outline for S_1 Photogrammetry Course

The following outline was prepared after five meetings between Sean C. Ahearn and Soedari Hardjoprayitno. It closely follows, "Elements of Photogrammetry," by Paul R. Wolf, the recommended text and is intended to be used as a preliminary outline for a beginning course in photogrammetry.

Proposed Outline for S_1 Photogrammetry Course

Text: Wolf, P. R., Elements of Photogrammetry, 2nd Ed.
McGraw-Hill Book Inc., 1983.

Lecture

1. Introduction
   1.1. Definition of Photogrammetry
   1.2. History of Photogrammetry - Events
      - 350 BC: Aristotle discusses process of optical projections
      - 1700: Lambert explores various perspectives for map preparation
      - 1839: Louis Vaguerre discovers the photographic process
      - 1859: Colonel Laussedat, Father of Photogrammetry, performed first successful mapping from aerial photographs
      - 1886: Captain Deville compiles the first topographic mapping
      - 1913: First use of airplane for photographic mapping.

1.3. Types of Photography

1.3.1. terrestrial (ground) photography

1.3.2. aerial photography

1.3.2.1. vertical photographs: tilt less than three degrees

1.3.2.2. oblique photographs: tilt greater than three degrees

low oblique - horizon not visible

high oblique - horizon visible

1.4. Vertical Aerial Photographs

Definitions: flight strip

end lap

stereoscopic overlap area

stereopair

exposure station

flying height

sidelap

block of photos

1.5. Use of Photogrammetry

surveying

highway design

planometric and topographic mapping

transportation network design

water resource planning

etc.

1.6. Unit of Photogrammetry

length

angular

area

1.7. Significant Figures

Example: .003 - one significant figure

.057 - two significant figures

0.010 - two significant figures

481.060 - six significant figures

2. Optics for Photogrammetry

2.1. Definitions

2.1.1. Physical Optics - light is composed of elecromagnetic waves eminating from a light source. Light waves have frequency, amplitude, and wavelength

frequency - number of wavelengths that pass a point in a given unit of time

Wavelength - distance between waves

$V = f\lambda$ V is velocity in metus per second

f is frequency cycle per second

λ is wavelength

Velocity of light: 186, 282.4 miles/sec or

298, 927.1 kilometers/sec

2.1.2. Geometrical optics - light travels from a point source through a transmitting medium in straight lines called light rays

2.2. Refraction of Light

2.2.1. Refractive index - the rate at chich light travels through a substance. Ratio of speed of light in a vacuum to the speed through the substance

$n = \frac{c}{v}$ n = refractive index

c = speed of light

V = velocity in the substance

Values for Refractive Index

air 1.000

water 1.0003

glass 1.33

2.2.2. Snell's Law - relates the angle of incident with the angle of refraction

$n \sin \emptyset = n' \sin \emptyset'$

n : refractive index of the first medium

n': refractive index of the second medium

$\emptyset$: angle of incident

$\emptyset'$: angle of refraction

$\emptyset = \emptyset - \emptyset'$ is the angle of defection

note: If light travels from a medium of low refractive index to a higher refractive index it will bend towards the normal. If light travels from a higher to lower refractive index it bends away from the normal.

Equation for the displacement of light passing through a glass plate with sides

$$h = t \sin \phi \left(1 - \frac{n \cos \phi}{n \cos \phi'}\right)$$

h : displacement

t : thickness of glass

n, n': the refractive indexes

O, O': angle of incident, angle of refraction

2.3. Reflection of Light

angle of incidence equals angle of refraction

2.3.1. Plane mirrors

2.3.1.1. first surface

2.3.1.2. back surface

2.3.2. Prisms

2.3.2.1. Critical angle - the angle of incidence where the angle of refraction is exactly 90°

If O is greater than the critical angle the light is reflected

2.3.2.2. Kinds of prisms

- right angle
- porro
- dove
- pentaprism

2.4. Simple Thin Lenses - optical glass that is ground to have two spherical surfaces, or one spherical surface and one flat surface. The function of a lense is to gather light rays and bring them to focus on some particular point.

2.4.1. Types of lenses

2.4.1.1. converging (positive lenses

biconvex

planoconvex

positive meniscus

2.4.1.2. diverging (negative) lenses

biconcave

planoconcave

negative meniscus

2.4.1.3. Definitions

<u>image plane</u>: point on the image side of a lense where light rays come to focus

<u>optical axis</u>: the line joining the centers of curvature of the lense

<u>focal point</u>: the point at which light rays parallel to the optical axis come together

<u>plane of infinite focus</u>: plane perpendicular to the optical axis that passes through the focal point

<u>focal length</u>: distance from the plane of infinite focus to the center of a thin lense

2.4.2. Equations

<u>Focal length</u>

$$\frac{1}{f} = (n - 1)\left(\frac{1}{R1} + \frac{1}{R2}\right)$$

f is focal length

n is index of refraction of glass

R1, R2 are the radii of the lense surfaces

<u>Lenses equation</u> - lense formula

$$\frac{1}{O} + \frac{1}{i} = \frac{1}{f}$$

f is focal length

O is the object distance

i is the image distance

2.4.3. Scheimpfug condition - if the image plane is tilted with respect to the object plane when projecting through a lense, the image plane, the object plane, and the plane through the optical center of the lense must intersect at one point to insure a focused image

2.4.4. Real and virtual images

2.4.5. Lateral magnification

$m = \frac{i}{o}$ m = magnification

i = image size

o = object size

2.4.6. Lense Quality

2.4.6.1. Aberrations: degrade image quality

spherical aberration

coma

astigmation

chromatic aberration

2.4.6.2. Distortions: degraded image geometry

radial

tangential

2.4.7. Depth of field - the range of object distances that can be accommodated without significant image degredation. A smaller aparture has a greater depth of field than a large one due to the angle at which the light rays meet the focal plane

3. Aerial Cameras

3.1. Types of Cameras

3.1.1. Single lense cameras - most commonly classified according to angular field of view

- normal angle (up to 75°)
- wide angle (75° - 100^{0})
- super wide angle (greater than 100°)

Formula for angle of view:

$L = 2 \tan^{-1}(\frac{d}{2f})$ L = angle of view

d = diagonal of image plane

f = focal length

3.1.2. multilense frame cameras

3.1.3. strip cameras

3.1.4. panoramic cameras

3.1.5. convergent cameras

3.2. Part of aerial cameras

3.2.1. camera magazine

3.2.2. camera body - lense cone assemble

3.2.3. shutter

3.3. Camera mounts

3.4. Camera controls

3.4.1. Intervelometer - antomatically trips the shutter for film exposure. Time setting between each exposure is determined by the desired endlap, the focal lenth, format size, flying length, and plane velocity

3.4.2. Viewfinder - crab control

3.4.3. Exposure control mechanism

3.5. Camera calibration

3.5.1. Elements of interior orientation: equivalent focal length

Definitions:

- calibrated focal
- average radial lense distortation
- tangential lense distortation
- principal point location
- distance between opposite fiducial marks
- angle of intersection of fiducial lines
- flatness of focal plane

3.5.2. Laboratory methods of camera calibration

3.5.3. Field and steillar methods of camera calibration

3.5.4. Techniques for measuring the resolution of camera lense

- line per millimeter - photograph a test pattern with 10 to 100 or more line point and examine the photograph with a microscope to count the line pairs.

- <u>modulation transfer function</u> - test patterns on a photograph are scanned to derive densities using a scanning microdensitometer. The densities of the scanned image are compared with the density of the original image to derive the modulation transfer function (MTF). A MTF of 50 percent indicates that the image modulation is 1/2 the object modulation for a particular set of line pairs. A MTF of 100 percent means that a set of line pairs can be clearly resolved.

4. Photographic Measurement and Refinements

4.1. Photographic Coordinate System

+ x axis - direction of flight

+ y axis - 90^0 counter clockwise from x

origin - intersection of fiducial lines called the center of collimation. For precise mapping cameras the origin is near the principal point

4.2. Trilaterative method of photocoordinate measurement, give example (text figure 5-4)

4.3. Instruments for Measurement

4.3.1. simple scales

engineers' scales

miro-rule

4.3.2. comparators: for precise photogrammetric measurement

monocomparators

stereocomparators

4.4. Refinement of Measured Image Coordinates

4.4.1. reduction of coordinates to the principal point: adjustment is made to the original coordinates obtained from the intersection of the fiducial marks to that obtained from the camera calibration of the principal point

4.4.2. shrinkage correction: the shrinkage or expansion of photographic film (plastic or paper) can be corrected by comparing the coordinates of the fiducial marks on the photographic with the camera calibrated coordinates; using the following equation:

$$Xa' = \left(\frac{Xc}{Xn}\right) Xa$$

$$Ya' = \left(\frac{Xc}{Yn}\right) Ya$$

Xa', Ya' = corrected coordinates

Xc, Yc = measured fiducial coordinates

Xn, Yn = calibrated fiducial coordinates

4.4.3. Correction for radial lense distortion: radial distortion is the movement of points along radial lines from the optical axis. It can be corrected using two methods:

1) graphic plotting of a radial lense curve calculated by camera calibration techniques (graphic)

2) curve approximation with a polynomial (numerical)

4.4.4. correction of atmosphere refraction

4.4.5. correction of earth curvature

5. Vertical Photographs

Vertical or near-vertical photograhs contain less than three degrees of tilt. The tilt usually approaches one degree. The equation in this section assumes that the photographs are trucly vertical.

5.1. Scale

Scale is the ratio of the map or photo distance to the corresponding ground distance

5.1.1. Scale over flat terrain (text figure 6-2)

$$S = \frac{ab}{AB} = \frac{f}{H}$$

S = scale

ab = photo distance

AB = ground distance

f = focal length

H = flying length

5.1.2. Scale over variable terrain (text figure 6-3): photo scale will increase with higher terrain and decrease with lower terrain

$$S = \frac{f}{H-h}$$

S = scale

f = focal length

H = flying length

h = elevation of point above datum

5.1.3. average photo scale

$$S\text{-average} = \frac{f}{H-(h\text{-average})}$$

$$h\text{-average} = \frac{hA + hB}{2}$$

hA = elevation of point A

hB = elevation of point B

5.1.4. ground coordinates from a vertical photograph (text figure 6-5)

Derived - from the scale equation (5.1.1)

$$\frac{xa}{Xa} = \frac{f}{H-ha}$$

$$Xa = xa\left(\frac{H-ha}{f}\right)$$

$$Ya = ya\left(\frac{H-ha}{f}\right)$$

xa = x photo coordinate

Xa = X ground coordinate

f = focal length

H = flying length

ha = elevation point a

ya = Y photo coordinate

Ya = Y ground coordinate

Distance calculation

$$AB = \left((XB - XA)^2 + (YB - YA)^2 \right)^{1/2}$$

Horizontal angle (text figure 6-5)

$$APB = 90^o + \tan^{-1}\left(\frac{XB}{YB}\right) + \tan^{-1}\left(\frac{YA}{XA}\right)$$

5.2. Relief displacement on vertical photographs using similar triangles (text figure 6-6)

$$d = \frac{rh}{H}$$

$$h = \frac{dH}{r}$$

d = displacement

h = elevation of point

r = radial distance of point from the principal point

H = flying length

5.3. Flying height of a vertical photograph

$$H = \frac{AB}{ab} f$$

AB = ground distance

ab = photo distance

f = focal length

5.4. Error evaluation

5.4.1. Sources

1) error in photographic measurements
2) error in ground control
3) shrinkage or expansion of film
4) tilted photographs where vertical photo is assumed

5.4.2. Calculation of error

Error is computed by taking the partial derivative of each factor contributing to error, with respect to the unknown function, then taking the square root of the sum of the squares.

<u>Example</u>

A vertical photograph is taken with a camera that has a focal length of 150 mm. Ground distance AB is measured as 1600 meters over flat terrain. The corresponding photo distance is 120 mm.

Flying length is calculated as:

$$H = \frac{fAB}{ab} = \frac{150 \quad 1600}{120} = 2000 \text{ meters}$$

Error ground distance $\pm$ .1 meters

Error photo distance $\pm$ .1 millimeters

Calculated error in H

The error in dH caused by the dAB in ground length is calculated by taking the derivative of dH/dAB

$$\frac{dH}{dAB} = \frac{f}{ab}$$

$$dH = \frac{f}{ab}\, dAB = \frac{150}{120}\, .1 = .125 \text{ meters}$$

The error in dH caused by error dab is

$$dH = \frac{-f\ AB}{(ab)^2}\ ab = \frac{-150\ 1600}{(120)^2}\ .1 = 1.667 \text{ meters}$$

Total error is calculated by taking the square root of the sum of the squares of individual error

$$d'\ H\ total = \sqrt{(.125)^2 + (1.667)^2}$$

$$d'\ H\ total = 1.67 \text{ meters}$$

6. Stereoscopic Viewing

6.1. Depth Perception

6.1.1. Monoscopic depth perception

1) relative size of object

2) hidden object

3) shadows

4) differential focusing of near and far object

6.1.2. Stereoscopic depth perception (text figure 7-3)

The optical axis of the eye intersect at an angle called the paralectic angle when focused on an object. The closer an object, the greater the paralectic angle. Depth is measured by detection of the paralectic angle. The human mind is sensitive to changes in the paralectic angle up to one second of arc.

6.1.3. Stereoscopic viewing photographs (text figures 7-5, 7-6, 7-7)

Stereoscopic viewing of photographs uses the same principle as stereoscopic viewing of the eye. Instead of viewing the object directly with both eyes, an image of the object is placed along the optical axis of each eye that would intersect at the true object location.

6.1.3.1. Y - Parallax

To insure proper stereoscopic viewing Y parallax must be cleared. Photos that have are truly vertical and the same flying height can be cleared of Y-parallax if the photos are aligned along the original flight line. This is accomplished by orienting the photos so that the principal point and conjugate principal points of the photo are on the same line (text figure 7-13)

Other sources of Y-parallax are attributed to tilt of the aerial photographs or difference in flying height between the two photos (text figure 7-14).

6.1.3.2. Vertical exageration in stereoscopic viewing

Vertical exaggeration is due to the difference in the base to height ratio of the photographic model and the stereoscophic model. The base-height ratio (B/H) is defined as the ratio of the base, the distance between exposure stations, and the height above datum from which the photographs were taken. For the stereo model it is the ratio of base, distance between the eyes, and the height above the stereoscope as simulated by the model (text figure 7-17, 7-18).

Equation for the photographic B/H ratio:

$$\frac{B}{H} = \left(1 - \frac{PE}{100}\right) \frac{d}{f}$$

PE = percent endlap

d = format dimension

f = focal length

Equation for vertical exaggeration:

$$V = \frac{B}{H} \quad \frac{h}{b}$$

B/H = base beight ratio photography

b/h = inverse of the base height ratio of the stereo model

7. Stereoscopic Parallax

Parallax is caused by the apparent shift of an object when viewed from different observation points. Stereoscopic parallax is the shift or displacement of an object from one photograph to another taken from an aircraft or spacecraft. The forward motion of the aircraft from one exposure to another (base), the height above terrain (H'), the focal length of the camera, and the format of the camera determine the degree of displacement of X-parallax.

Objects that have a higher elevation are closer to the camera and will therefore show greater X-parallax than objects at a lower elevation (text figure 7-1).

7.1. Parallax Equation (text figure 8-2)

$$Pa = Xa - Xa'$$

Pa = X - parallax

Xa = X coordination the first photo at exposure station L1

Xa' = X coordination of the second photo taken at exposure station L2

The coordinates for Xa and Xa' are measured using the flight line axis (text figure 8-4).

7.2. Monoscopic Methods for Parallax Measurement

Parallax can be computed monoscopically by first orienting the stereo pair along the flight line (principal points and conjugate principal points are on the same line). Photos are then taped down and the distance between principal points is measured (D) along with the distance between the two images of the point (db) (text figure 8-5).

Parallax of the point is computed as follows:

$$Pb = D-db$$

Once D is measured, parallax is computed by measuring d, the distance between the points.

7.3. Stereoscopic Methods to Parallax Measurements

7.3.1. Principal of floating mark (text figure 8-6)

Stereoscopic methods of parallax measurements are more accurate and faster than monoscopic methods. The floating mark is used to precisely locate a point for stereoscopic viewing. A half mark is placed on each photo and viewed stereoscopically. When the half is on the line between the focal point of the eye and the image on the photo (for each photo) the floating mark will appear to be on the surface of the object being viewed (text figure 8-6).

7.3.2. Techniques for Parallax Measurement

Parallax bars use the concept of the floating mark to measure parallax.

$Pa = Xa - Xa' = (D - K) + r$

D = distance between the principal points

K = distance between the measured points plus or the reading on the parallax for

The constant C replaces (D - K) in

$Pa = C + r$

The parallax bar constant is computed by monoscopically computing the parallax of the principal point of each photo and averaging (text figure 8-10).

For principal point 1:

$P2 = X1 - X2$

Because Xa is the principal point:

$X1 = 0$ and $P1 = -X2$

$P2 = X2' - X1'$ $\quad X2 = 0 \quad$ $P2 = -X1'$

If the photographs are truly vertical, the flying heights are equal and there is no measurement error: P1 should equal P2.

This is rarely the case, so the parallax bar constant is

computed for each principal point, conjugate principal point pair and averaged.

$$C1 = P1 - r1 \qquad C = \frac{C1 + C2}{2}$$
$$C2 = P2 - r2$$

To measure the parallax of any other point on the photo the floating mark is stereoscopically placed on the point r is read from the parallax bar, and the parallax for the point is computed:

$$Pa = C + r$$

7.4. Parallax Equations

The parallax of a point is used to calculate its corresponding ground coordinates X, Y, Z.

By equating similar triangles the following equations are derived (text figure 8-13)

$$XA = B\frac{Xa}{Pa}$$

$$Ya = B\frac{Ya}{Pa}$$

$$Za(ha) = H\frac{Bf}{Pa}$$

B = air base

Xa, Ya, Za = ground coordinates point A

Xa, Ya = photo coordinates point A

Pa = parallax of point A

These equations are known as the parallax equations and form the basis for topographic and planometric mapping.

The parallax equations assume that the photography is vertical and that flying heights are equal. Because these conditions rarely occur corrections to the parallax measurements can be estimated using a parallax correction graph (text figure 8-16).

7.5. Elevation by Parallax Difference

Elevation of a point can be computed by comparing it with the parallax of a point with known elevation.

Equation: (derivation text 8-7)

$$ha = hc + \frac{\Delta P\ (H-hc)}{Pa}$$

ha = elevation of unknown point A

hc = elevation of known point

ΔP = parallax difference Pa-Pc

H = flying height

Pa = parallax of point A

The elevation computed from the parallax difference equations are more precise when control points are used in the computation. It is best to use the closest control point to the point being measured to minimize the effect of photographic tilt, lense distortion, and imperfect alignment of photographs.

7.6. Flying Height and Air Base from Parallax

Average flying height for two overlaping photos can be calculated if the air base and one control point in the overlaping area is known. From equation in 7.4.

$$ha = H\frac{BF}{Pa}$$

$$H = ha + \frac{BF}{Pa}$$

H = flying height

ha = elevation of control point A

B = air base

F = focal length

Pa = parallax of point A

Air base can be computed from the same equation if the flying height and one control point in the overlaping area is known.

$$B = (H-ha)\frac{Pa}{F}$$

7.7. Topographic Mapping with Stereoscope and Parallax Bar

Topographic maps can be compiled with a steroscope and parallax bar where accuracy requirements are low. Planemetric position are calculated for a network of points throughout the overlapping area using the parallax equation (see text 7.4). Elevations are compared for each point by parallax difference (see text 7.5). Contours are drawn for the network of point.

8. Tilted Photographs

The previous sections assumed that vertical aerial photographs were truly vertical; actually it is almost impossible to hold the optical axis of the camera in a truly vertical position. The resulting aerial photographs usually contain less than one degree of tilt and rarely over three degrees of tilt. In precise photogrammetry mapping tilt must be corrected.

8.1. Exteriory Orientation

The location and angular orientation of the axis system of the camera with respect to the ground coordinate system at the time of exposure is known as the exterior orientation of the photograph. Six parrameters describe the exterior orientation. Three concern the space position of the photograph given by XL, YL, and ZL, the three-dimentional position of the exposure station in the ground coordinate system, and three concern the angular orientation of the photographic axis system with respect to the ground coordinate system. Angular orientation is described by two different systems: the tilt - swing - azimuth (t-s-a) system and the omega - phi - kappa (w-o-k) system.

8.1.1. Angular orientation in tilt, swing, and azimuth (text figure 11-1)

The angle between a line extended from the exposure station to the principal point (L focal length) and the nutral line (LN) dropped from the exposure station is the tilt angle. The line segment on the photo (ON) between the principal point and the point where the vertical line (LN) intersect the photo (photographic nadir point) determines the swing. The clockwise angle from the photographic +Y axis to the line segment ON is the swing angle. The extention of line segment ON from point O through point N forms the principal line of the tilted photograph. The angle between the point of intersection of LN with the datum (photographic nadir point) and intersection of the plane LNO (principal plane) with datum (datum principal line) gives the azimuth angle.

8.1.2. Auxillary tilted photocoordinate system (text figure 11.2)

The auxillary coordinate system is determined by the direction and magnitude of the tilt. The origin of the auxillary system is the point where the vertical line from the exposure station intersects the photograph (the photographic nadir point n). The line from the photographic nadir point through the principal point is the +Y axis. The +Y axis is 90 degrees clockwise from the +Y axis. The rotation angle between the photgraphic coordinate system and

auxillary system is the angle between the +Y of the photographic system and +Y of the auxillary photographic system. Rotation from the original photocoordinate system to the auxillary coordinate system is accomplished with the following equation (text figure 11-2)

$$Xa^1 = Xa \cos O - Ya \sin O$$

$$Xa^1 = Xa \sin O + Ya \cos O + F \tan (t)$$

Xa, Ya = photocoordinate original system

Xa^1, Ya^1 = auxillary photocoordinate

O = angle between +Y original and +Y auxillary

t = tilt of photo

8.2. Scale of a Tilted Photograph (text figure 11-3)

Scale variations on tilted photography is not only a function of relief but also of the magnitude of the angular tilt. Scale is largest at the maximum -Y value in the auxillary coordinate system and is smallest at the maximum +Y value (given uniform terrain). There is no scale variation along the X axis due to tilt in the auxillary coordinate system.

Equation: (derivation text 11-4)

$$S = \frac{F \cos t - Ya^1 \sin t}{H - ha}$$

S = Scale

F = focal length

Y^1 = Y coordinate in the auxillary system

H = flying height

ha = elevation of point A

T = tilt of camera axis

8.3. Ground Coordinates from Tilted Photographs

If tilt and swing of a photograph are known ground coordinate can be computed for any point with a known elevation.

Equation: (derivation 11-5)

$$X^1 = \frac{(H-h)}{F / \cos t - Y \sin t} X^1$$

$$Y^1 = \frac{(H-h)}{F / \cos t - Y^1 \sin t} Y^1 \cos t$$

X^1, Y^1 : ground coordinate in the Arojetea auxillary photo-coordinate system

X^1, Y^1 : auxillary photocoordinate system

Other terms as previously described.

8.4. Relief Displacement on Tilted Photographs

Relief displacement on tilted photographs occurs along radial lines from the photographic nadir point. This point is very close to the principal point on near vertical photos, on a photo containing three degrees of tilt the distance between the principal point and the nadir is only 8 mm (152 mm focal length).

8.5 Angular Orientation in Omega, Phi, and Kappa (text figures 11-8, 11-9)

The omega-phi-kappa system to describe the angular orientation of the camera coordinate system at the time of exposure is an alternative to the tilt-swing-azimuth system. This system relates the angular orientation of the photograph with respect to the ground corodinate system to rotations about X axis (omega), rotation about the Y axis (phi), and rotation about the Z axis (kappa).

8.6. Determination of Exterior Orientation Parameters

Three techniques can be used to determine the exterior orientation of a photograph:

1) The Anderson-scale point method, for computing tilt, swing, and azimuth;

2) The Church method, also for tilt, swing, and azimuth computation; and

3) Space resection of collinearity for determination of omega, phi, and kappa.

8.7. Space Resection by Colinearity

Space resection by colinearity is the most effective method for determining exterior orientation. It is a numberical method that yields all six orientation parrameters and can use redundant ground control. A minimum of three ground points are necessary.

9. Stereoscopis Plotting Instrument (text figure 12-1)

Stereoscopis plotting instruments are designed to derive planimeter and topographic maps from stereo photographs.

9.1. Orientation of Stereo Plotters

Three processes are involved in preparing stereoscops-plotters for map compilation: interior orientation, relative orientation, and absolute orientation. Interior orientation involves recreating the original geometry of the aerial photograph by precisely locating the diapositives in the plotter. Relative orientation is the reproduction of the orientation of the photographs at the time of

exposure. The diapositing are placed in the plotter so that light rays passing through each object on the left diapositive will intersect with light rays passing through corresponding objects on the right diapositive at one point (text figure 12-2). This procedure produces the stereo model. Absolute Orientation is the leveling and scaling of the model to a reference ground datum.

9.2. Classification of Stereoscopis Plotters

- direct optical projection instruments
- optical mechanical projection
- analytic plotter

10. Mosaics

10.1. Definition

10.2. Advantage and Disadvantage

Advantage: mosaics contain a wealth of ground information, relative planimeter position of object are shown, mosaics are easily interpretable and cost considerably less than maps.

Disadvantage: mosaics do not represent true planimetric positions of objects. Image displacement and scale variation are caused by relief displacement, variable flying height, and tilt of the camera axis.

10.3. Types of Mosaics

10.3.1. Uncontrolled: Aerial photographs are assembled by matching features on adjacent photographs. Unnectified photographs are used without any reference to control.

10.3.2. Semi-controlled: A network of control points are used to orient the mosaic and maintain overall planimetric integrity. Unnectified and unrationed photographs are used.

10.3.3. Fully-controlled: Rationed and rectified photographs are oriented to a network of control points.

PROPOSED IMAGE PROCESSING LAB

INSTITUT PERTANIAN BOGOR (IPB) AND THE UNIVERSITY OF WISCONSIN-MADISON (UW)

Sean Ahearn (UW),

A. Rambe, dan Mahmud A. Raymadoya (IPB)

OBJECTIVES

The lab will be designed to allow IPB to become self sufficient in the field of digital image processing of remotely sensed data for natural resource inventory and assessment.

It will provide a means for technology transfer between the Institut Pertanian Bogor and the University of Wisconsin and promote educational exchange and cooperative research between the Universities.

The choice of hardware for the lab will be guided by three criteria: reliability, serviceability, and the absence of a critical link in the system.

Software will be designed by both IPB and UW personnel with emphasis placed on user friendly interaction for both educational and research applications.

DEVELOPMENT OF THE SYSTEM

The system is to be purchased and developed at the University of Wisconsin in two stages. In the first stage equipment will be ordered to allow for development and testing to begin promptly in September 1983. The second stage will entail ordering the balance of the system and joining the IBMs in an

integrated network with a hard disc as the mainstay for data storage. Initially, all elements of the system will be delivered to the University of Wisconsin-Madison to enable: a thorough testing of equipment upon delivery, software development, and training of Bogor personnel while in Madison.

TRANSFER OF THE SYSTEM

Approximately two-thirds of the system will be transferred to IPB in June of 1984. The other one-third will remain at UW for the duration of the project, at which time it will be completely transferred to IPB. The reason for this strategy is two-fold:

(a) For future educational exchange between IPB and UW, personnel from IPB can work on the same system at UW that they have at IPB. This provides greater continuity in the educational exchange program and optimizes time spent at UW.

(b) Further development of the system can occur simultaneously at both Institutions in the years following the initial transfer.

THE HARDWARE SYSTEM

In the first stage the system at IPB will consist of four (and in the later stage will be extended to seven) parallel 512 KB IBM PC/XT computers, each of which can operate independently of one another. A networking system which consists of another 512 KB IBM PC/XT computer will integrate the elements of the system to expand the processing capability. The design of the integrated network will be such that should any one of the elements go down, the others should not be affected, and the interfaces will still be maintained.

Each of the IBM PC/XT computers comes with a set of peripherals such as: a hard disc and a floppy disc drive for programs and data storage, an operator consol, an B/W CRT to display statistical analysis and operator-machine communications, and a color display monitor to do interactive image processing.

One 800/1600 BPI magnetic tape drive will be used as an input medium for the Landsat MSS and other remotely sensed digital data on CCT's. A video camera will scan images on maps and photos and input to the system through an A/D converter.

The main data storage medium is an 160 MB hard disc, accessible from each of the operator consoles through the networking system.

A color graphic terminal will facilitate graphic manipulation interactively. The intermediate as well as the final results of the statistical analyses and classifications can be produced in the forms of tabular and maps like output through a dot-matrix printer. The hardware system configurations are presented in Figures 1 and 2.

THE SOFTWARE SYSTEM

The software system will consist of a set of interactive programs written in PASCAL and assembler languages. This interactive mode of operation will enable the user to monitor the processing on CRT and color monitor screen, and decides what to do in order to arrive at the desired results. An easy-to-use and complete directory of all the software packages will be made available to guide the user to perform his analysis and to help the programmer to write new

programs efficiently (See: Figure 3). Since the programs are written in high level language, modification and expansion of the existing programs are easily done.

In the earlier stage of operation, the software system will consist of some of the standard image processing programs (Table 2).

The user application models for natural resource monitoring and assessment as part of the broader "Information Integration and Analysis System" remain to be developed and are waiting for the touches of the many able scientists in the Institutes.

Table 1. HARDWARE EQUIPMENT LIST

ITEM	Number of Units	
	UW	IPB
IBM PC/XT 512 KB with HARD DISC (10 MB) and FLOPPY DISC DRIVES, MONOCHROME and COLOR MONITOR	3	4
COLOR GRAPHICS TERMINAL (CGT)	1	1
INTERFACE CARD FOR CGT	2	2
MACRO ASSEMBLY	1	1
PASCAL COMPILERS	3	4
FORTRANT COMPILERS	-	1
TAPE DRIVE	-	1
160 MB DISC DRIVE	-	1
VIDEO CAMERA and A/D CONVERTER	-	1
NETWORKING SYSTEM (IBM PC/XT and Pheripherals and Software)	-	1

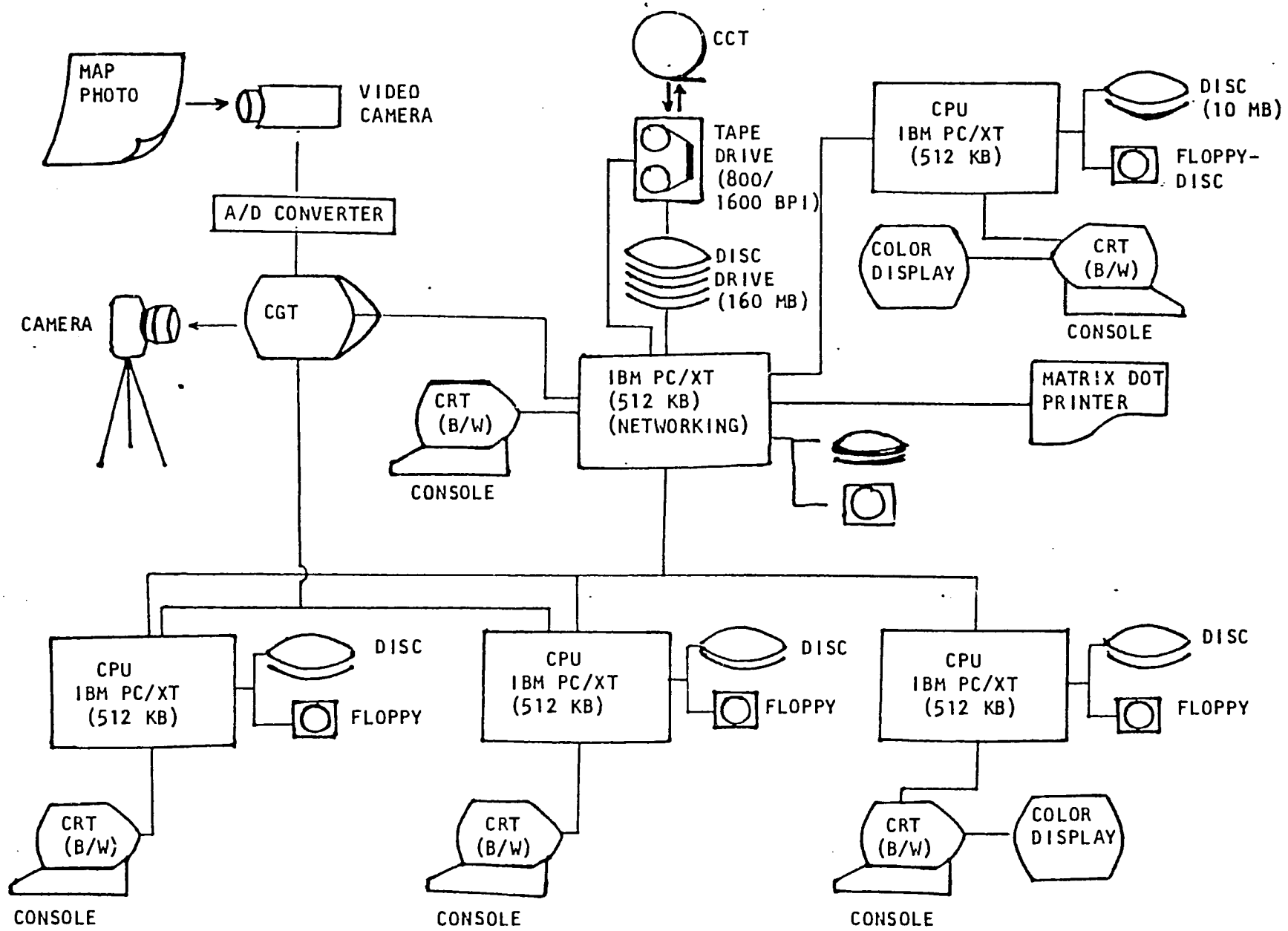

FIGURE 1 . HARDWARE SYSTEM CONFIGURATION AT IPB BY JUNE/JULY 1984.

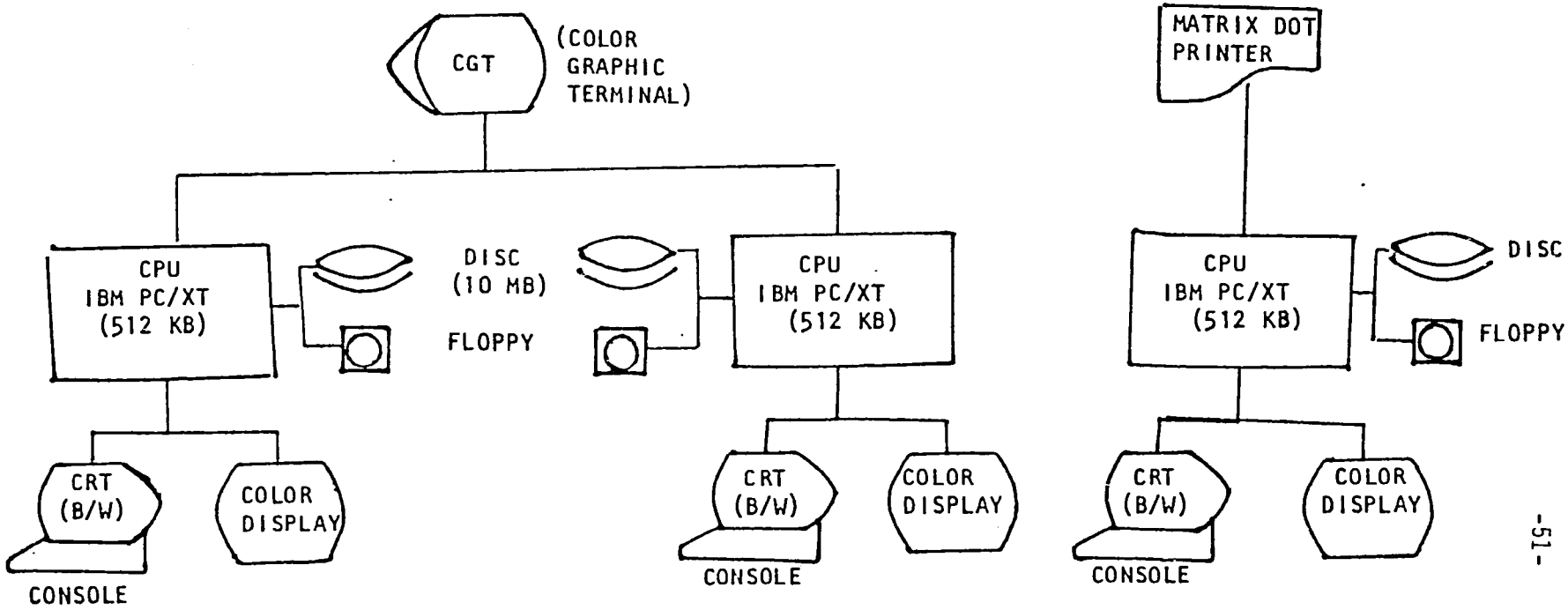

FIGURE 2. HARDWARE SYSTEM CONFIGURATION AT THE UNIVERSITY OF WISCONSIN BY SEPTEMBER 1983 UNTIL THE END OF THE PROJECT.

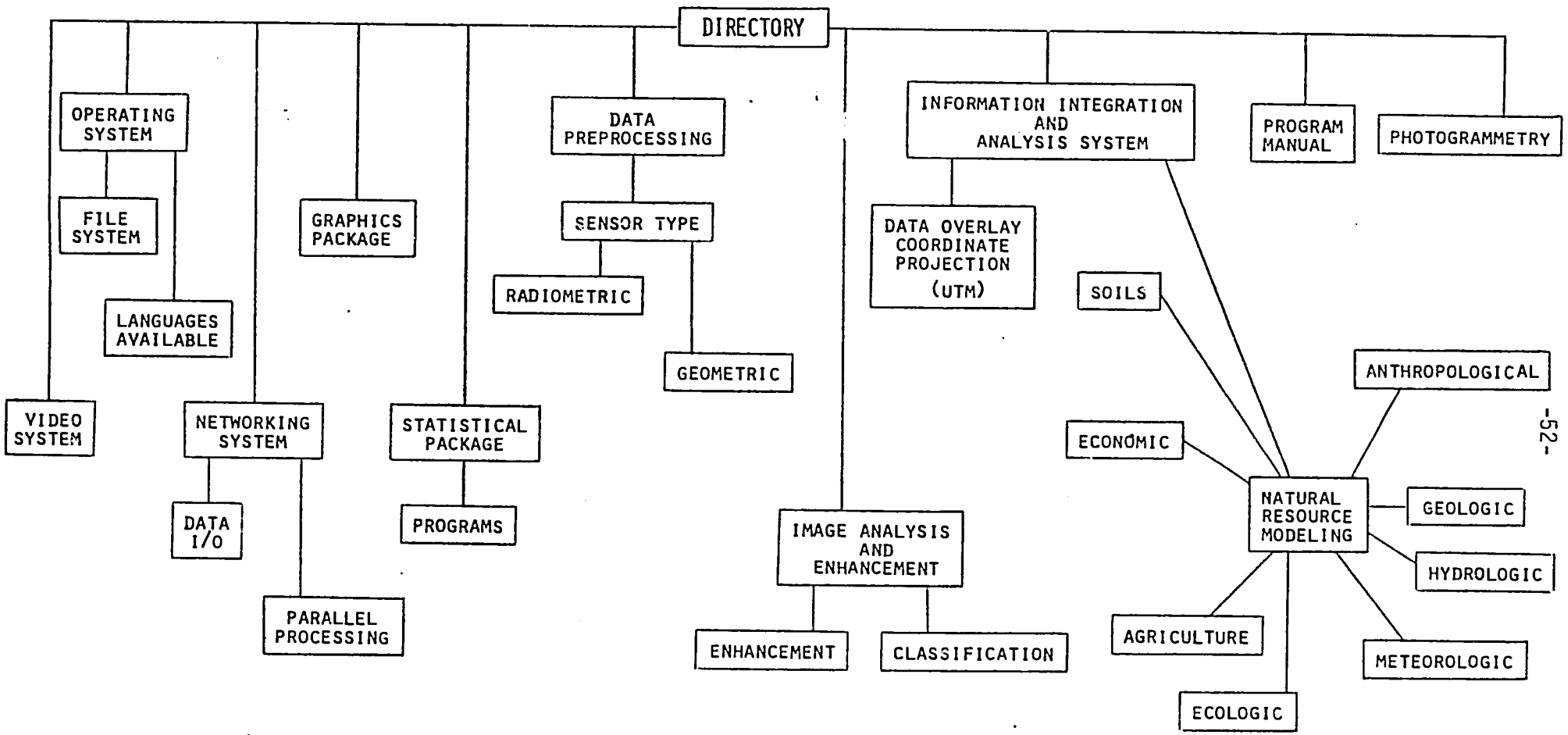

FIGURE 3 - IPB-UW IMAGE PROCESSING SYSTEM SOFTWARE