2630123.02

RENEWABLE ENERGY RESOURCES
FIELD TESTING

PN-AAV-126

ISN-45464

6 MAY 1986

TECHNOLOGY REVIEW FOR FIELD TEST #11

WIND FARM AT RAS GHAREB

MAY 1986

FINAL

Prepared for

Egyptian Electricity Authority
Cairo, Egypt

U.S. Agency for International Development
USAID Mission: Cairo, Egypt

Submitted to

Louis Berger International, Inc.
Washington, D.C.
(Contract AID 263-0123C-00-4069-00)
(Meridian Task No. MC-173-396)

Prepared by

Meridian Corporation
Falls Church, Virginia

FOREWARD
TECHNOLOGY REVIEW

The Egyptian Electricity Authority (EEA), United States Agency for International Development (USAID/Cairo), and a group of U.S. consultants form a team responsible for conducting field test demonstration projects for eleven renewable energy applications in Egypt. These demonstration projects include the use of photovoltaic, wind and solar thermal systems for water pumping, ice making, desalination, industrial process heat and grid connected electricity generation. The specific objectives of the 4-year program are: (1) to demonstrate the viability of renewable energy technologies in Egypt, (2) to comprehensively strengthen Egyptian technical and institutional capabilities in the full spectrum of renewable energy planning and decision-making, and (3) to establish the infrastructure necessary to ensure that those renewable energy technologies which have proven successful, are available for widespread use in Egypt.

Each of the project field test activities contain seven generic tasks: Technology Review, Application Review, Conceptual Design, Preparation of a Statement-of-Work for a Tender Document, Proposal Evaluation, Supervision of Hardware Installation, and Performance Evaluation. Three of the eleven potential field test demonstration projects are wind energy system applications. The Technology Review for one of these three field tests, a grid-connected wind farm, is presented in this document.

The proposed wind farm is sited near Ras Ghareb on the Red Sea and would consist of multiple, interconnected turbines with a total peak power of approximately 250 kW. The system is designed to operate in a fuel-saver mode for an existing power station and provide electricity to an existing transmission grid.

The Technology Review will support decisions and information requirements

of the Conceptual Design task and the evaluation of field test contractor proposals. It will provide information regarding the technical maturity of all required hardware for the successful installation and operation of a wind farm. The Review also provides information on manufacturers and products, and the operating history of existing U.S. wind farm technology.

This document is Subtask 3.11.2 of the field test requirements under Contract AID 263-123C-00-4069-00, Task Area 3. The recommendations made in this document are based on the maturity of wind farm technology and with consideration of any perceived site-specific constraints existing at Ras Ghareb. The results from Task 2.1, Economic/ Market Assessment address other factors such as economics, market size and social/institutional aspects that may impact the potential for widespread implementation of wind farms in Egypt. The Task 2.1 results are provided in a separate document.

TABLE OF CONTENTS

Section		Page
1.	Executive Summary	1
1.1	Overview	1
1.2	Criteria for Evaluation of the Technology	2
1.3	Historic Growth of Wind Farm Technology	3
1.4	Hardware Performance/System Reliability	4
1.5	Conclusions and Recommendation	5
2.	Background/Objectives	6
2.1	Project Objective	6
2.2	Description of Field Test #11	7
2.3	Purpose of Technology Review	8
3.	Historical Perspective on Wind Farms in the U.S.	10
3.1	Wind Farm Growth and the Evolution of Turbine Size	10
3.2	The U.S. Wind Turbine Industry	11
3.3	Planning For Wind Farm Power Generation	13
3.3.1	Operations and Maintenance	15
3.3.2	Wind Farm Design	16
4.	Review and Evaluation of Hardware Options	19
4.1	Power Generation Section	19
4.1.1	Rotor	19
4.1.2	Transmission	24
4.1.3	Generator	24
4.1.4	Sensors, Controls and Brakes	27
4.2	Structural Equipment	30
4.2.1	Tower	30
4.2.2	Foundation	32
4.3	Wind Farm Instrumentation and Monitoring	32
4.4	System Interconnection	35
4.4.1	Safety	36
4.4.2	Stability	38
4.4.3	Power Variability	38
4.4.4	Optimum Array Electrical Configuration	39
4.4.5	Array Control	39
4.4.6	Electrical Protection	39
5.	U.S. Wind Turbine Manufacturer Profiles	40
5.1	Bergey Windpower Company, Inc	40
5.2	Earth Energy Systems, Inc	41
5.3	Carter Wind Systems	41
5.4	Enertech Corporation	42
5.5	Wind Power Systems, Inc	42

5.6 International Turbine Manufacturing..... 43
5.7 North Wind Power Company..... 43
5.8 VAWTPOWER, Inc..... 44
5.9 Flowind Corporation..... 44
5.10 Micon Wind Turbines, Inc..... 45
5.11 Windtech, Inc..... 46
5.12 U.S. Wind Power..... 46
5.13 Fayette Manufacturing Company..... 47

6. U.S. Wind Industry Products..... 48

7. Wind Farm Applications in the U.S. 55

7.1 California Wind Farms..... 55
7.1.1 Altamont Pass..... 56
7.1.2 Tehachapi Mountains..... 56
7.1.3 San Gorgonio Pass..... 58

7.2 Other U.S. Wind Farms..... 59
7.2.1 Hawaii..... 59
7.2.2 Massachusetts..... 59
7.2.3 New Hampshire..... 60

Bibliography..... 61

Appendix A (Wind Farm Instrumentation System Specifications
and Data Requirements for Field Test #11)..... 62

Appendix B (U.S. Wind Energy Product Manufacturers)..... 67

LIST OF EXHIBITS

Exhibit		Page
1.	Wind Turbines Shipped in the U.S. by Turbine Size for 1981-1984	12
2.	U.S. Wind Turbine Product Status - 1984	11
3.	U.S. and Foreign Manufactured Wind Turbines Installed in the United States By Year	14
4.	Major Wind Farm Components	20
5.	Different Blade Construction Methods	21
6.	Diagram of WECS Using a Synchronous Alternator	26
7.	Diagram of WECS Using an Induction Generator	26
8.	Diagram of WECS Using a DC Generator	26
9.	Wind Farm Monitoring System Arrangements	34
10.	Estimated Number of Interconnection Systems On-Line as of December 1980	36
11.	Wind Turbines	49
12.	Towers Equipment	50
13.	Monitoring Equipment	51
14.	Interconnection Equipment	52
15.	Miscellaneous Equipment	54
16.	1985 California Wind Farm Energy Production in Millions of Kilowatt-Hours	56
17.	Altamont Pass Wind Farms	57

1. EXECUTIVE SUMMARY

1.1 Overview

The objective of this field test is to demonstrate the viability of a wind farm in Egypt, interconnected to an existing grid distribution system. The proposed field test at Ras Ghareb is based on three observations, (1) the significant growth in the past few years in the wind energy system industry and in particular the success of wind farms for the generation of electricity in the U.S., (2) the importance of demonstrating wind energy conversion systems (WECS) as a part of the potential mix of renewable energy technologies for Egypt, and (3) the value of a field test demonstration that is sited in high wind resource areas where the strengthening of Egyptian technical and institutional capabilities for widespread development of this technology can be maximized.

The development of wind energy systems to generate electricity has experienced a significant growth worldwide over the last decade and especially in the past few years. Initially this resurgence in interest in harnessing the wind was the result of the dramatic increase in energy prices in the early 1970's. The sustained growth, in light of the gradual decline in energy cost in the early 1980's, reflects the influence of recent technology advancements and economic incentives that have broadened the wind energy market to include large-scale electricity generation. Egypt is in a position to exploit and build upon these technology advancements while introducing a new renewable source of electricity to the country.

The initial decision to site this wind farm at Ras Ghareb was based on a review of the historically windy regions of Egypt. Data collected over the past 6-months by Battelle Pacific Northwest Laboratories supports the selection of the site. Ras Ghareb has an exceptional wind resource with a very high frequency of high winds (75.1 percent of the hourly wind speeds were greater than 8 meters/second at a 20-meter height). The April-September 1985 average wind

speed at a 10-meter height was 9.2 meters/second; at a 20-meter height it was 9.6 meters/second. This compares very favorably with the wind resource measured at the wind farm sites in California.

1.2 Criteria for Evaluation of Technology

The Technology Review is the first of four documents resulting from field test activities. The purpose is to identify required technologies and to assess their maturity. The second document, the Application Review, defines and justifies the operational aspects of the field test. The third document, the Conceptual Design, sizes the system and provides hardware specifications. The fourth document, the Statement-of-Work, specifies operational and training requirements for bidding contractors.

There are a number of key factors that provide the context for Technology Reviews and support the evaluation of the desirability to proceed with a particular field test. The first factor is the degree to which the field test contributes to the objectives of the overall REFT Project. The Project has broad objectives to investigate selected renewable energy options:

1. Comprehensively strengthen Egyptian technical and institutional capabilities in the full spectrum of renewable energy planning and decision-making for technologies and applications;

2. Develop and sustain an Egyptian renewable energy infrastructure through establishment of data bases, information systems and organizations that effectively serve both the public and private sectors;

3. Design, realize and evaluate the performance of a series of field tests which utilize commercially available technologies in applications having potential for widespread use in Egypt;

4. Complete formal managerial and technical training, both on-the-job and specialized, and an intensive information dissemination program.

An assessment of the contribution of this specific field test to the REFT Project objectives must consider the criteria necessary for a successful demonstration of any grid-connected wind farm. The Technology Review is

primarily concerned with the evaluation of commercially available hardware and systems required for the successful design, installation and operation of a grid-connected wind farm. The criteria used to evaluate wind farm technology are listed below, although not necessarily in the order of importance.

1. Use in similar wind farm applications
2. Relative operation and maintenance history
3. Hardware performance/system reliability.

The following paragraphs summarize the findings of various analyses addressing these criteria. Detailed discussions of each are provided in this document or in additional published documents as referenced.

1.3 Historic Growth of Wind Farm Technology

One measure of technologic maturity is the extent of the commercial availability of hardware. The growth of wind farms is the most encouraging indicator of progress in the wind system industry. At least 50 developers have installed wind farms to sell electricity to more than 15 utilities in the U.S. The majority of U.S. wind farm applications are in California, where approximately 8800 machines totalling almost 1,000 megawatts of capacity are currently installed. This is an increase from about 1700 machines (420%) and 70 megawatts (1330%) at the end of 1982.

The majority of turbines installed on U.S. wind farms are horizontal axis machines rated less than 100 kW. In 1984, the average size of wind farm turbines was 78 kW; in 1985 it increased to 90 kW. Several companies are designing and beginning to market intermediate-sized (200-500 kW) horizontal and vertical axis machines.

The commercial availability of wind turbines and the wealth of operational experience gained in wind farms over the past few years are available to Egyptian energy planners and engineers. A moderately sized wind farm at Ras Ghareb that uses multiple, interconnected turbines should provide an excellent field test demonstration of the viability of this renewable energy source for Egypt.

1.4 Hardware Performance/System Reliability

System hardware performance is rapidly improving after a generally poor showing by early turbine installations in the late 1970's. Energy production data from wind farm applications is sporadic, but some are indicating availability factors (the percent of time that a wind turbine is able to operate when the wind velocity is above the turbine cut-in velocity) of 95 to 97 percent with capacity factors (ratio of measured energy production to estimated energy production at rated power output) of 8 to 35 percent as improved turbines and maintenance procedures come on-line and turbines are sited properly. System hardware components which directly affect wind farm performance are; rotor, transmission, generator and controls. Monitoring and interconnection equipment are also important subsystems. These components are proven and commercially available. Any hardware characteristics which are particularly applicable to Ras Ghareb are detailed in Section 4.

Rotor - Major performance variations in turbine output generally will involve rotor design. Popular materials for blade construction are wood, fiberglass and aluminum. Numerous manufacturers make rotors that are proven in operation over the past 5-years. Wooden or fiberglass blades appear to be most suitable for Ras Ghareb.

Transmission - Almost all currently operating wind farm machines contain a step-up gearbox between the rotor and generator. Most wind turbines use helical or planetary gearboxes, with gear ratios ranging from 14:1 to 25:1. Gearbox technology is well understood and used in operational wind farms. Both helical and planetary gearboxes are appropriate for the proposed wind farm at Ras Ghareb.

Generators - Generators used in wind farm turbines are one of three standard types - synchronous, induction or direct current generators. The majority of turbines currently in operation in U.S. wind farms use induction generators. Generators are standard systems in use throughout the world in wind farm and other applications for the generation of electricity. Any of the three types could be used at Ras Ghareb, although induction generators seem most suitable.

Controls - Turbine controls are an important component for optimizing system performance. Turbine control prevents rotor overspeed in high winds and allows turbine operation during cut-in and cut-out wind speeds. Control methods currently used are blade pitch angle control, turbine yaw control and rotor braking. Rotor braking appears to be the simplest and most practical for application at Ras Ghareb.

Monitoring - Wind farm monitoring systems are essential for providing information on such critical wind farm performance variables as output, energy production, availability, machine status, and wind speed and direction. Systems include a data collection unit to collect information from one or more turbines and a computer to process the data. A number of types which meet the minimum field test requirements, as detailed in Section 4, are commercially available.

Interconnection - Equipment required for safe connection of a wind farm to a utility grid includes transformers, switchgear, relays and suppressors. This equipment is standard in the electric utility industry. What distinguishes the application of this equipment in grid-connected wind farms is the fact that the power flow is extremely transient. Some of the major concerns with such applications are: safety for operating and service personnel, and equipment; transient and dynamic stability behavior; the effect of power variability on system dispatch and unit committment; optimum bus configuration and voltages for array interconnection; and array control. Ras Ghareb appears to have no unusual interconnection problems which could arise during system installation, start-up and testing.

1.5 Conclusions and Recommendation

The findings in this Technology Review support the recommendation to proceed with Field Test # 11 from the point of view of technological maturity and commercial availability of proven hardware. There should be no unusual technical problems associated with this demonstration project at Ras Ghareb. The following observations can be made:

- U.S. wind farm capacity has increased by over 1300% since 1982. Wind farm operating experience has greatly improved system reliability. Egyptian energy planners and engineers can capitalize on this wealth of operational experience.

- Wind farm availabilities and turbine capacity factors have been steadily increasing through the use of proven, off-the-shelf equipment. Numerous established manufacturers are sources for this commercially available hardware.

In summary, the technologies associated with wind farm development are commercially available and proven. A grid connected wind farm of approximately 250 kilowatts should be designed, purchased and installed at Ras Ghareb. The design should allow for maximum flexibility and ease of system replication by using multiple, small to moderate sized (less than 100 kW), wind turbines.

2.0 BACKGROUND/OBJECTIVES

2.1 Project Objective

The Egyptian Electricity Authority (EEA), the U.S. Agency for International Development (USAID/Cairo), and a group of U.S. consultants form a team responsible for conducting field test demonstration projects of eleven renewable energy applications in Egypt. These include the use of photovoltaic, wind and solar thermal systems for water pumping, ice making, desalination, industrial process heat and grid connected electricity. The specific objectives of the 4-year program are threefold: (1) to demonstrate the viability of selected renewable energy technologies in Egypt, (2) to comprehensively strengthen Egyptian technical and institutional capabilities in the full spectrum of renewable energy planning and decision making, and (3) to establish the infrastructure necessary to ensure that renewable technologies, which have proven successful, are available for widespread use in the country.

The three general tasks being conducted are:

(1) Field Tests - To assess some selected renewable energy system/ applications which could be suitable for commercial use in Egypt; develop detailed engineering design hardware specifications and system performance requirements; prepare RFP packages for procurring equipment; supervise the work of hardware contractors; and collect and evaluate data generated from the field tests.

(2) Supporting Analysis - Conduct technical, social, financial, economic, and market analyses of renewable systems related to the field tests. Develop a computer based Renewable Energy Information System (REIS).

(3) Training - Improve the skills of the Government of Egypt (GOE) and the private sector in evaluating renewable technologies, applications, economics and markets and provide technical assistance in system design, installation, operation and maintenance.

Three of the eleven potential field test demonstration projects are wind energy system applications:

- Village Power - A number of small wind turbines (4kWp to 25 kWp) and/or wind turbine/diesel/battery hybrid systems will be designed as stand-alone systems or interconnected with existing power distribution systems.

- Desalination - A single turbine or a small cluster of wind turbines will be interconnected to supply power for a desalination system near the Hurghada Marine Institute on the Red Sea.

- Grid Electricity - A 250 kWp wind farm will be built near Ras Ghareb on the Red Sea. The system will operate in a fuel-saver mode for an existing power station and provide electricity to an existing transmission grid.

The proposed village power and desalination applications were selected as a result of studies and analyses of renewable energy technologies and potential applications in Egypt. These studies were conducted by U.S. government agencies and private consulting services companies in the late 1970's and early 1980's. Thr proposed grid electricity application at Ras Ghareb is a recent addition to the field test project. The application is based on (1) the significant growth in the wind system industry and in particular the success of wind farms in the U.S. and (2) the belief that the growing energy demand of settlements along the Red Sea coast, an historically windy region of Egypt, should consider wind energy systems as a possible renewable energy supply component in a mix of power systems for the generation of electricity, and (3) the value of a wind energy demonstration to be sited where the strengthening of Egyptian technical and institutional capabilities for widespread development of this technology can be maximized.

2.2 Description of Field Test #11

The purpose of this field test is to determine the feasibility of multiple wind turbines (wind farm) interconnected with a local electrical grid distribution system. Egyptian Electricity Authority (EEA) and USAID/Cairo established that the peak capacity of the wind farm should be approximately 250 kilowatts. The proposed location for the wind farm was the village of Ras Ghareb on the Gulf of Suez across from the southern tip of the Sinai, approximately 320 kilometers from Cairo. The system sizing and specific location for this field test were based on a preliminary analysis of regions in Egypt where stable local grids and historically good wind resource co-existed. These factors were investigated

in detail during a site visit by personnel from the EEA and the U.S. Project Team on May 14-15, 1985.[1] Details of this site visit and specific information concerning the Ras Ghareb site are presented in the Application Review.

2.3 Purpose of Technology Review

The purpose of the Technology Review is to provide a review and evaluation of relevant technology in order to support decisions and information requirements of the conceptual design task, the preparation of a Statement-of-Work for a Tender Document, and evaluation of field test contractor's proposals.

There are six major technical factors that should be considered specifically for this field test, (1) the magnitude of the wind resource, (2) the user requirements and site specific civil works and infrastructure characterisitics that could affect the installation, (3) the size and stability of the local grid, (4) and ability of the user to operate and maintain the sytem, (5) the social, economic and institutional aspects of the application, and (6) the maturity of wind farm technology, i.e. the availability of proven, reliable and commercially available hardware systems.

The Technology Review will provide information on wind farm technology, commercial status, relevant project descriptions and manufacturer profiles. This information should form a data base for comparisons among various wind energy system technology options. However, there are two issues that must be considered in the using the Technology Review:

---

[1] In attendance for the U.S. Project Team were Peter Borgo of Meridian Corporation and Seyoum Soloman and David Tyler of Louis Berger International, Inc. In attendance for the EEA were Eng. Mohamed Mitwally El-Sayed and Eng. Nagi Gowli. Discussions were held with Eng. Ibrahim Aly, the Area General Manager for the General Petroleum Company (GPC), Eng. Wahid Madbouli, a manager in the Electrical Engineering Department for GPC and various members of their staffs.

(1) There are few reliable methods for comparing wind turbine unit price and performance. Manufacturer specifications have not been developed from a consistent set of assumptions or operating conditions.

(2) The technology itself is a "moving target" as new developments substantially change the technology base, and as each manufacturer makes incremental design improvements to their products.

3.0 HISTORICAL PERSPECTIVE ON WIND FARMS IN THE U.S.

3.1 Wind Farm Growth and the Evolution of Turbine Size

Wind farms of significant size have been in operation in the United States since about 1981. Previous to this period, wind system applications were restricted to dispersed residential installations and agricultural water pumping systems. The key incentive to wind farm development in the U.S. was unquestionably the tax advantages available to investors since 1978. These tax advantages expired at the end of December 1985.

Progress of wind energy technology consists of three phases:

(1) Solving gross reliability problems (mostly structural) in order for the wind system industry to continue to exist,

(2) Concentrating on improved relibility through better maintenance and on reducing operating and maintenance costs,

(3) Increasing energy production by more efficient control algorithms and by better siting decisions.

The U.S. wind system industry is generally in the second of these three phases with some effort being initiated in the third phase as the hardware technology matures. The current time period is certainly a critical one in determining the future for the U.S. wind turbine industry. Growth has been rapid since 1982; over 815 percent for a total of 650 MW installed at the end of December 1984 and nearly 1000 MW installed by the end of 1985.[2] A recent conference hosted by the Electric Power Research Institute (EPRI)[3] concluded that a significant part of this growth was due to manufacturing improvements and economies of scale supported by increases in world oil prices.

---

2 American Wind Energy Assoc. presentation at EPRI/Utility Wind Interaction Workshop, Feb. 26, 1985.

3 EPRI/Utility Wind Interaction Workshop, Feb, 1985.

Exhibit 1 shows the trend in the U.S. over the past four years toward midrange wind turbine size (21-100 kilowatt peak power). Note also the steady decrease in turbines of a size greater than 500 kilowatts and the increase in the 100-500 kilowatt turbine size. This trend is also indicated by an increase in prototype activity for midrange turbines as manufacturers develop newer models (Exhibit 2).

	Power Rating Range (kw)				
	0.2-5	6-20	21-100	101-500	Over 500
Number of Commercially Available Models	12	11	10	7	0
Number of Prototype Models	3	6	12	10	4

Exhibit 2. U.S. Wind Turbine Product Status - 1984

The California Energy Commission has published the following data on the evolution of average turbine size in California wind farms: 1981, 49 kW; 1982, 52 kW; 1983, 69 kW; 1984, 78kW; and 1985, 90 kW.[4] There is no doubt that the interest and investment in wind energy systems in the U.S. since 1978 has produced a mature, commercially available technology for the generation of electricity in grid-connected applications that is available for transfer to Egypt.

3.2 The U.S. Wind Turbine Industry

The U.S. wind turbine industry at the end of 1984 included 30 turbine manufacturers with commercial sales (about 15 manufacturers produce turbines in significant quantities), 96 equipment manufacturers, 15 siting service companies, 25 wind monitoring equipment suppliers and more than 100 private wind power

[4] Solar Energy Intelligence Report, February 18, 1986.

Exhibit 1.

WIND TURBINES SHIPPED IN THE U.S. BY TURBINE SIZE FOR 1981-1984

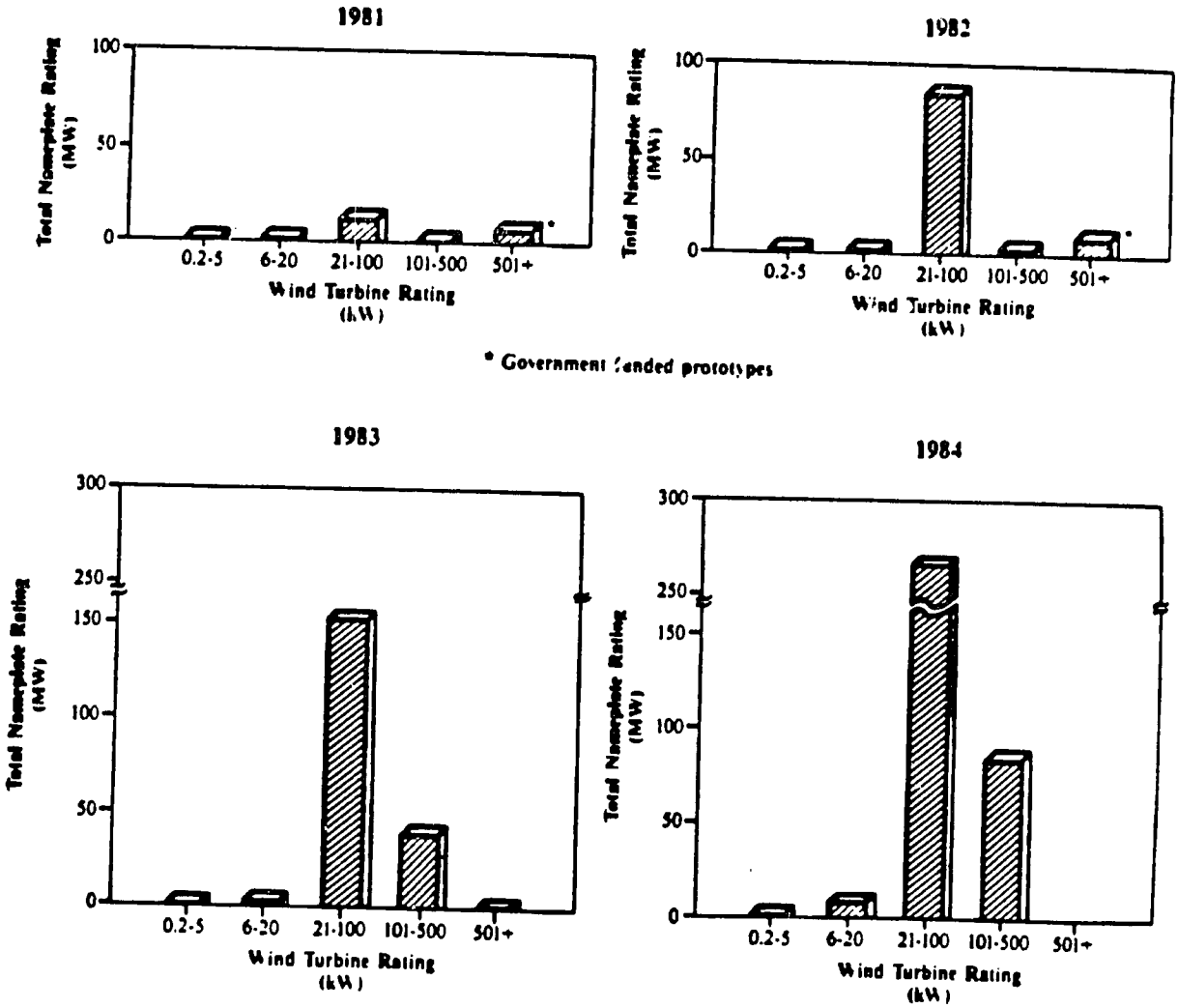

Sources: Sciences Applications, International Corporation

development or management companies. California wind farms are the location of 98 percent of the turbines and related equipment produced by this industry. In 1984, over 200 GWh of electricity were generated by wind power in California, principally for sale to two U.S. utility companies, Pacific Gas and Electric (PG&E) and Southern California Edison (SCE). By the end of 1984, SCE had more than 3,600 machines (221MW) connected to the system, while PG&E had more than 3,500 machines (350 MW) connected. Electricity production through November 30, 1985 was 589.2 million kWh, approximately 3.3 times that produced during the same time period in 1984. There has also been a significant penetration of this market by turbines of foreign manufacture (Exhibit 3).

In the future, the wind system industry must further increase wind machine performance and improve system economics to offset the loss of tax advantages and oil-price-driven market share. Accordingly, the current focus of the industry is to make machines that meet the necessary performance and economic standards and to obtain a significant share of a developing world market.

3.3 Planning For Wind Farm Power Generation

The introduction of wind power installations connected to utility systems in Ras Ghareb will present many of the same power generation problems that U.S. utilities face. Among the issues raised by the increase in the use of wind power in the U.S. are the following:

- Public Acceptance
- Siting
- Transmission Requirements
- Power Quality
- Wind Turbine Reliability
- Energy Interchange
- Environmental Consideration (e.g., noise, visual impacts)

Exhibit 3.

U.S. AND FOREIGN MANUFACTURED WIND TURBINES INSTALLED IN THE UNITED STATES BY YEAR

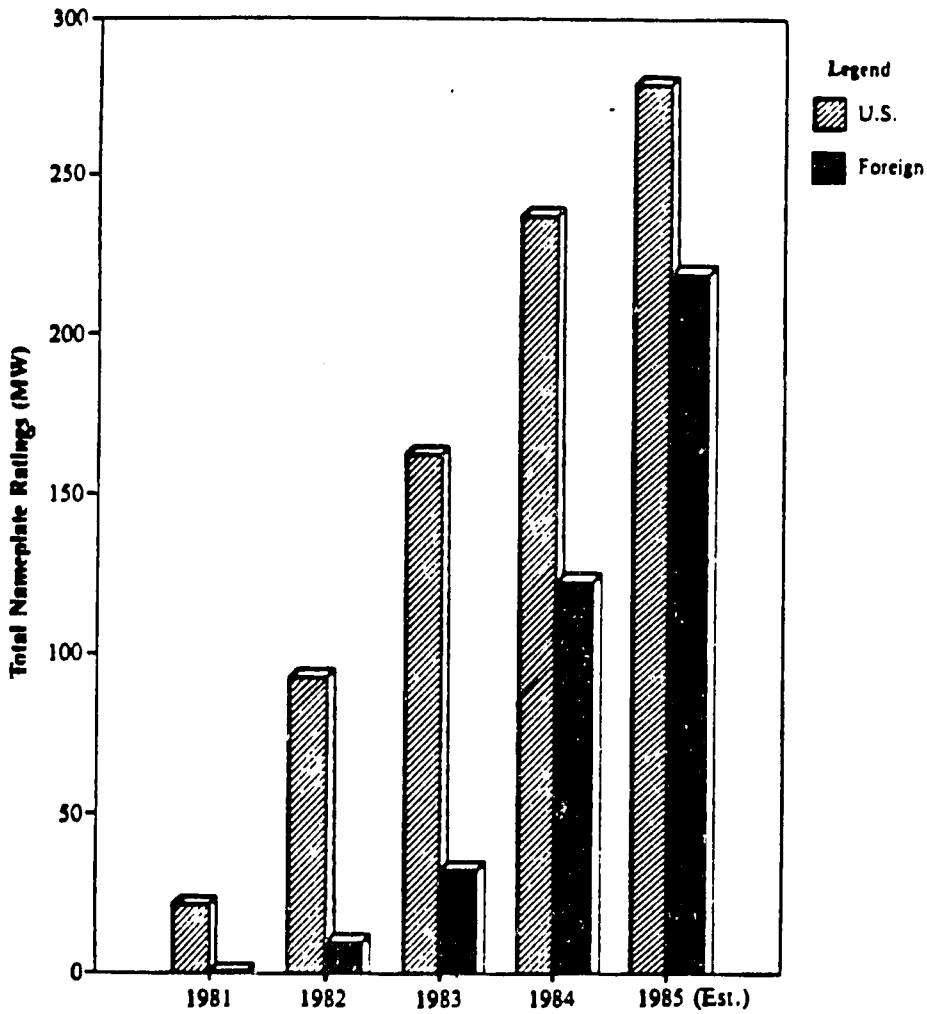

Many of these issues could arise in Egypt also. For example, a few hundred kilowatts of wind machines connected to the grid systems of Egyptian governorates would have no effect on energy interchange. A megawatt or more of intermittent wind generated electricity on the existing grid load demand at Ras Ghareb, however, could cause serious power quality problems. Another similar situation exists with respects to system reliability. In Hawaii, the strength of the wind and the corrosive effect of salt air impose reliability problems. This environment is similar to that currently being observed at Egypt's windiest sites along the Red Sea coast.

The introduction into Egypt of wind farms under the Renewable Energy Field Testing Project provides an excellent opportunity to assess the usefulness of this form of electricity generation and to train Egyptian engineers and technicians in its use. Three broad areas of wind energy development, similar to the experience realized in the U.S. in the early 1980's, will be investigated specifically for Egypt as a part of the field test program. The three areas are, (1) operation and maintenance, (2) design of wind system installations, and (3) wind system costing.

3.3.1 Operation and Maintenance

The ability to provide inexpensive operation and maintenance for a wind system installation is crucial to successful implementation of any application. Basically, the type and level of maintenance is that required for any electricity generating turbine. Major differences reflect the fact that the turbine is at least 24 meters above ground and relatively open to the environment.

The measure of a good operation and maintenance program is evident in the demonstrated turbine availability and its capacity factor. The more reliable commercial wind power stations in California are achieving turbine

availability (the percent of time a turbine is operational when the wind velocity is above the turbine cut-in velocity) above 95 percent.[5]

The turbine capacity factor, i.e., the measured energy production of a turbine divided by the energy that would have been produced had the turbine run at rated power for the same period of time, varies widely with current U.S. installations from a low of 8 percent to a high of 35 percent for specific machines at specific sites.[6] It is evident that siting and generator sizing for a specific wind resource is critical to achievement of a high capacity factor.

It is important to realize that the capacity factor for wind turbines is not equivalent to the capacity factor for other types of power generating equipment, because of the intermittent nature of the wind. Proper generator sizing for wind turbines dictates that the capacity factor be limited to approximately 35 percent.[7] If the capacity factor is higher, the generator may be undersized for the wind resource and extra energy is lost that could be captured at a negligible added cost.

3.3.2 Wind Farm Design

In general, the size of a wind farm should be limited to between 10 and 15 percent of a utility's generating capacity. These figures are "rules-of-thumb" used by experts in determining approximate wind farm sizing for a given utility. These figures represent acceptable limits of wind power penetration above which utility grid problems, e.g. power quality fluctuations, may result.

The overall REFT project objectives indicate that a wind farm field test demonstration for Egypt should be an installation of a reasonable number of interconnected and commonly controlled turbines connected to the existing

---

5 Electric Power Research Institute Data, Feb., 1985.
6 Electric Power Research Institute Data, Feb., 1985
7 American Wind Energy Association data, Feb., 1985.

electrical grid at Ras Rhareb. The interconnection of the wind farm to the grid should be in a "fuel-saver" mode whereby the wind farm is operated in parallel with the current generation capacity at Ras Ghareb. In effect, a wind generated kilowatt-hour displaces a conventionally generated kilowatt-hour whenever the wind velocity is sufficient.

Additional important design considerations for wind power stations include: (1) balance between the cost of low voltage conductors and transformers; (2) the number of turbines connected to each transformer; (3) turbine spacing; (4) line loss; and (5) land cost. For example, economics of scale for large transformers are offset by the numbers and length of conductors required to link with multiple turbines. Close turbine spacing shortens conductor lengths, permits more turbines per transformer, and reduces land costs. These advantages can be offset, however, by reduced energy capture from close spacing. The layout of a wind farm must take into account the nature of the prevailing wind, the site topography and turbine spacing and tower height. For the proposed Ras Ghareb site, the wind is from the north and northwest over 95 percent of the time.[8] The selected ridge line is unobstructed to the prevailing wind and appears to have a uniform flow along the ridge at a 30-meter height.[9]

It is beneficial to group the turbines as close as possible to minimize interconnection wiring and access roads. Turbine spacing in a direction perpendicular to the prevailing wind should be at least two rotor diameters. In the downwind direction, turbine spacing should be approximately 10 rotor diameters to

---

8 Egyptian Wind Resource Assessment Project, Interim Site Data Report, April-September 1985; Battelle Pacific Northwest Laboratories; January, 1986.

9 Kite Anemometer Studies at the Proposed Ras Ghareb Wind Farm Site, Battelle Pacific Northwest Laboratories, February 8, 1986.

avoid wake effects.[10]. In current U.S. wind farm designs, engineering optimizations are limited, and design alternatives with the lowest initial cost usually are selected.

---

10 Meteorological Aspects of Siting Large Wind Turbines, Battelle Pacific Northwest Laboratories, January 1981.

4.0 REVIEW OF HARDWARE OPTIONS

Equipment requirements for a wind farm can be broken down into four major sections: the power generation section for each wind generator; the structural equipment required to support the wind generator; the equipment necessary to monitor the wind farm; and the equipment required to interface the system with the utility network. All components for a grid connected application are detailed in Exhibit 4. Although a horizontal axis turbine is shown, the same components are part of a vertical axis turbine.

4.1 Power Generation Section

The power generator section includes the rotor, transmission, generator, drive train components, and all related structural and mechanical devices necessary to generate power. These components are normally "pre-designed" into a wind generator - i.e., when purchasing a wind generator one does not request a specific rotor, generator transmission, etc. Wind generators are designed for specific wind speed ranges and applications and all equipment in the power generation section has already been optimally selected. Since wind generators are sold as "packaged units" and individual components are not specified in a bid, this section will discuss components of the power generation section in general terms.

4.1.1 Rotor

Major performance variations in wind machines generally will involve blade design. The diagrams (Exhibit 5) and discussion that follows applies to both horizontal axis and vertical axis machines.

The extruded hollow aluminum blade first was installed on a WECS in the early 1950's. This blade construction is being used again, especially for the Darrieus (vertical axis) machines.

Built-up fiberglass blades with honeycomb or foam cores, or hollow cores (except for a tubular structural spar), are also being used, as are

Exhibit 4.

MAJOR WIND FARM COMPONENTS

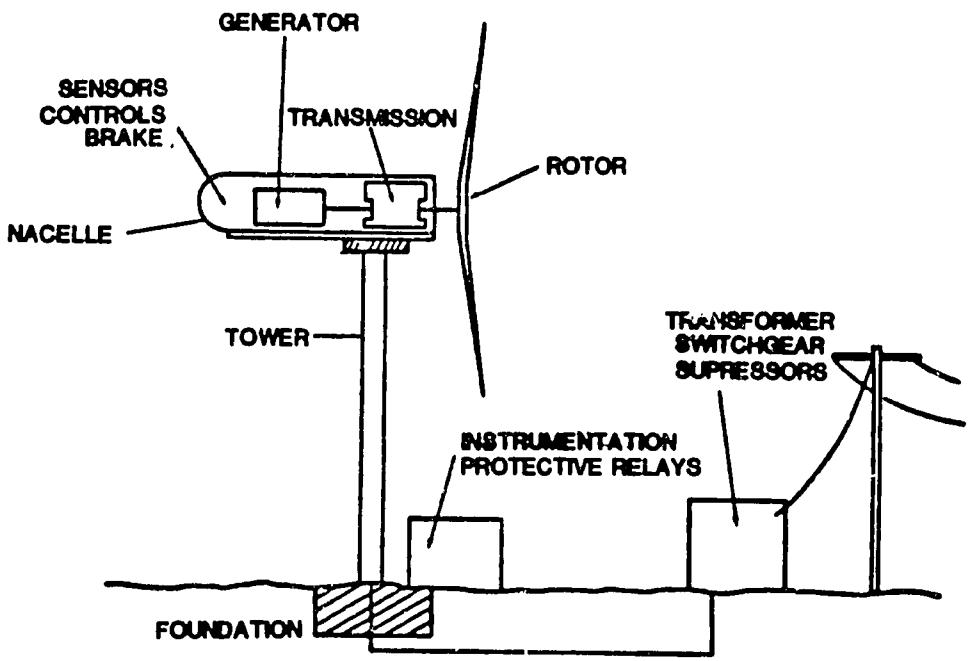

Exhibit 5.
DIFFERENT BLADE CONSTRUCTION METHODS

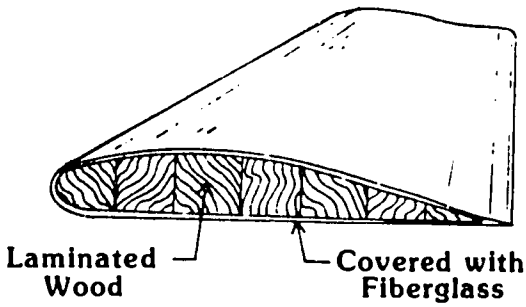

SOLID WOOD BLADE

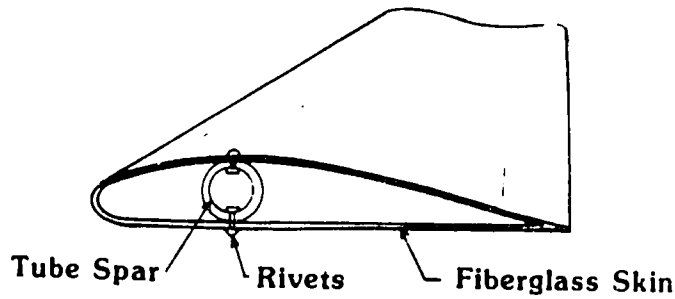

TUBULAR SPAR, WITH MOLDED FIBERGLASS SKIN

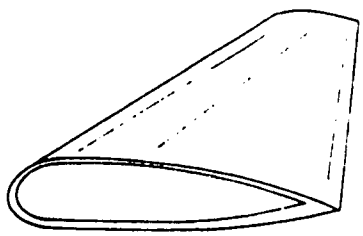

EXTRUDED HOLLOW METAL BLADES

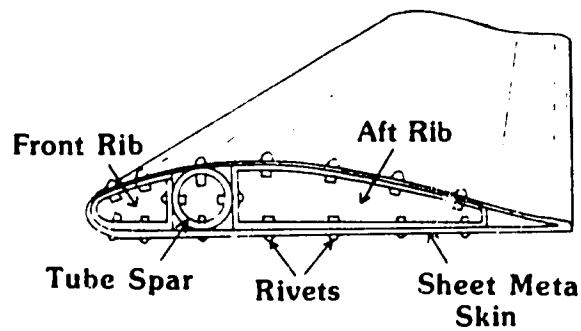

TUBULAR SPAR, WITH METAL RIBS AND SKIN

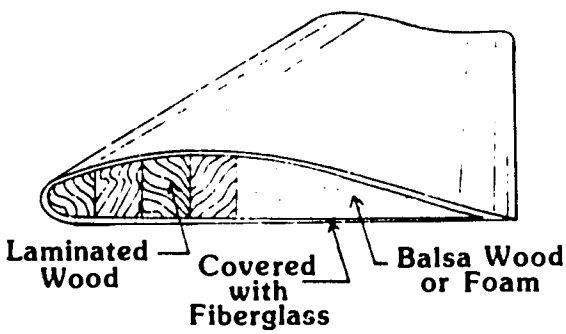

PARTIALLY SOLID BLADE

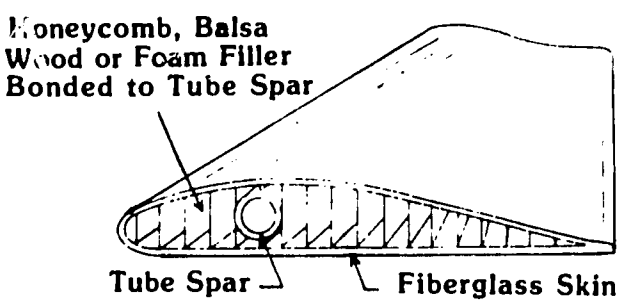

COMPOSITE BLADE CONSTRUCTION

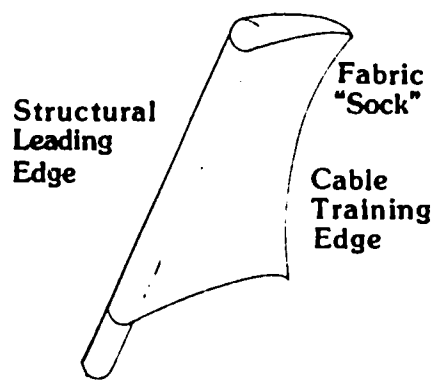

SAILWING CONSTRUCTION

SOURCE: PARK, Jack and Schwind, Dick. Wind Power for Farms, Homes, and Small Industry. Nielsen Engineering & Research, Inc., Mountain View, CA., Department of Energy Contract E(04-3)-1270, September, 1978.

built-up sheet aluminum blades. All these methods of construction have a history of long service life in WECS applications, as well in many aerospace applications.

One popular blade material is wood, either laminated or solid, with or without fiberglass coatings. Uncoated wooden blades usually have a copper or other metal leading edge cover for protection against erosion by sand, rain, and other environmental factors. Wood offers many advantages over other blade materials as follows:

1. Good resistance to fatigue loading.

2. High strength-to-weight ratio -- wood is one of the strongest material per unit of weight. Because of heavy blade loadings aggravated by blade weight, the weight of the rotor is a concern.

3. Superior damping characteristics - Wood damps vibration better than most other structural materials (steel and aluminum for example). This is important because various excitation functions are always present in wind generating systems and it is desireable that the system itself serve to dampen these excitations.

4. Minimal Electromagnetic Interference - Rotating turbine blades reflect electromagnetic signals in such a way as to cause periodically constructive and destructive interference between the reflected and transmitted signals. Poor siting of wind turbines could cause unacceptable interference with television, radio, VOR and DVOR navigational systems, microwave links, and other radio frequency equipment. Such interference is minimal with wooden blades in comparison to other materials.

These four factors provide strong incentives for using wooden rotors, either laminated or solid, with or without fiberglass coatings, at Ras Ghareb. An additional factor influencing the choice of wooden blades is the corrosive environment present at Ras Ghareb. Aluminum blades, whether hollow or built-up, are much more susceptible to corrosion damage than wood. Blade corrosion could cause increased maintenance problems, decrease system performance or lead to catastrophic failure (i.e., blade throwing).

Turbine rotors can be either fixed or variable pitch. The fixed pitch rotor represents the simplest and most reliable rotor design option. Typically,

in a machine with a variable pitch rotor, the pitching mechanism and associated controls represent the most complicated part of the system. Pitch actuation generally requires hydraulic, electrical or mechanical rotary connections to the blades. Statistically, this has always been a major source of failure in wind machines.

Some designers of wind turbines justify the additional complexity of a variable-pitch rotor by its theoretically higher efficiency and its ability to operate with variable-speed generators, but recent studies have indicated that this theoretical advantage is largely lost in real-world situations because of the affects of wind gustiness. The fixed-pitch, constant-speed machines can react more quickly to gusts and extract power from them while the variable-pitch, variable-speed machine cannot change its speed rapidly enough to respond. The net effect is that as much energy can be extracted by the much simpler fixed pitch, constant speed machine.

Vertical axis wind turbines use fixed pitch blades because of the nature of the turbine design which has connections at both ends of the vertical rotor shaft. Vertical axis machines will operate in wind from any direction (no yaw required) but they require a motor to initially rotate the blades when the wind velocity is sufficient for operation. Both of the U.S. manufacturers of vertical axis turbines use extruded aluminum blades.

One of the overriding design criteria for the wind farm at Ras Ghareb is simplicity. Simple designs will result in fewer maintenance problems. Ras Ghareb is subject to a lot of wind blown sand or salt spray. Such environmental conditions can only compound the maintenance problems associated with variable pitch rotors - i.e., the rotor pitch bearings are exposed to salt spray or sand. Since performance differences between fixed and variable pitch rotors appear minimal, it seems that a fixed pitch machine is more suitable at Ras Ghareb.

4.1.2 Transmission

Early trade off studies have shown that medium size wind machines benefit from a step-up in speed between the rotor and generator. Although it is theoretically possible to custom-build a generator which will operate directly at the rotor speed (direct drive), this has always proven unsatisfactory and very expensive in practice. A much more practical approach is to use a step-up gearbox to increase the rotor speed to a common generator speed of 1800 RPM and benefit from the millions of hours of operating experience available with "standard" generators. Typical gearboxes have gear ratios ranging from 14:1 to 25:1.

The type of gearboxes which have been used in wind machines are generally of helical, planetary, hypoid, or circulute design. Of these four, helical and planetary types are the most widely used. Planetary gearboxes offer large power capacities in small packages and in-line design, which make their use in windpower systems appropriate. Helical gearboxes are somewhat large for a given power capacity and are also available in the in-line configuration.

Turbine manufacturers select gearboxes to suit specific requirements such as weight, size, gear ratio and rotational speeds. It is not a significant concern of wind farm developers, owners or operators as to which type of gearbox is used, so long as it performs efficiently and with minimum maintenance. Although helical and planetary gearboxes are the most widely used in current wind farm applications there is no overriding factors which would make their use at Ras Ghareb better or worse than hypoid or circulute designs. Hence, it appears that any type of gearbox would be appropriate at Ras Ghareb.

4.1.3 Generator

Generators used in wind turbines are one of three standard types: synchronous generators, commonly referred to as alternators; induction generators;

or direct current (DC) generators.

Synchronous generators (alternators) produce an AC voltage at a frequency that is proportional to shaft speed. Even with rotor speed regulation there will still be enough of a variation in frequency and phase to prevent connection of an alternator directly to the utility grid. Thus the alternator is allowed to turn at different speeds, producing a variable-frequency output. The alternator output is then rectified, converting it to DC. The DC is fed to a synchronous inverter, at a line frequency output that can be connected directly to the utility grid. With this configuration the need for a transmission to connect the rotor and generator is eliminated and the alternator can be connected directly to the rotor. A diagram of this configuration is shown in Exhibit 6.

An induction generator is well suited for grid connected applications. They are self-regulating, in adjusting to varying torques and load conditions, and can act as motors for starting. A picture of this system is shown in Exhibit 7. As a result of their simplicity of design, operation and control most grid-connected wind farm applications currently use induction generators. The typical induction generator, without power factor correction, will have an average power factor of 50 to 65% when it is operated over varying power and speed conditions. With the use of a capacitor bank, which is an integral part of the power generation section, the average power factor can be increased to 85% or greater. This would be an acceptable value from a utility's point of view.

The final method used for generating utility grade AC power is by using a DC generator with an inverter. The generators used in such applications are 3-phase brushless alternators. For design simplicity a standard inverter is located on the ground adjacent to the wind turbine. A DC voltage regulator is required to maintain a consistent input voltage to the inverter. This arrangement is shown in Exhibit 8.

Exhibit 6.
DIAGRAM OF A WECS USING A SYNCHRONOUS ALTERNATOR

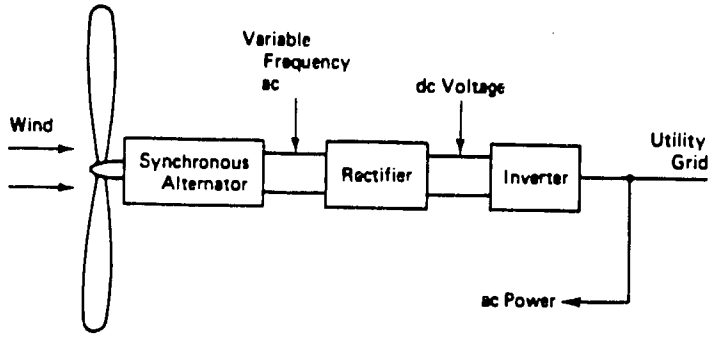

Exhibit 7.
DIAGRAM OF WECS USING AN INDUCTION GENERATOR

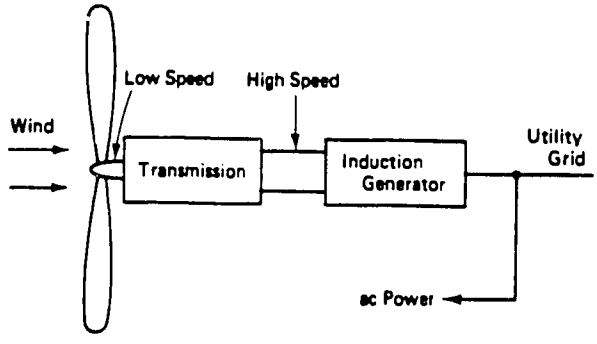

Exhibit 8.
DIAGRAM OF WECS USING A DC GENERATOR

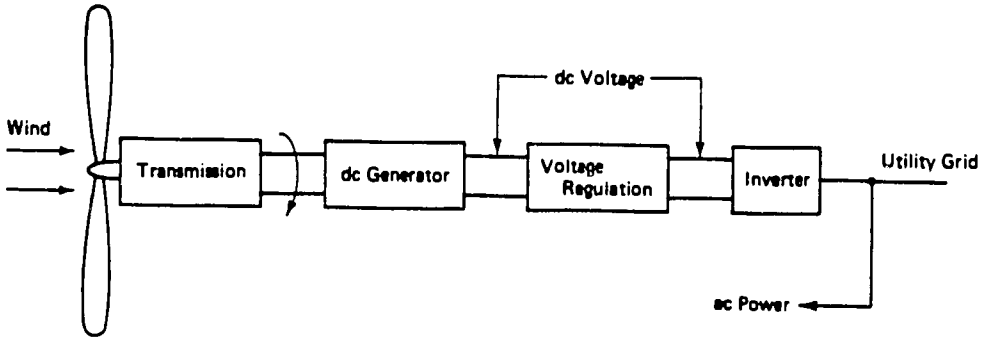

U.S. turbine manufacturers produce machines with 60 cycle per second outputs, compatible with the U.S. electric grid. Since 50 cycle power is standard in Egypt, U.S. manufacturers will have to modify their machines slightly. For synchronous and induction machines this is most commonly done by oversizing the generator and running it slower - i.e., smaller gearbox step up ratio. This is possible since the synchronous speed of a generator is directly proportional to its output frequency. By running the oversized generator slower, output frequency can be maintained at 50 cycle with the same power output (same rotor diameter) as the 60 cycle machine. The net affect is that the machine operates less efficiently. Another approach using synchronous or induction machines would be to rectify 60 cycle AC power (convert to DC) and then invert it back to AC at 50 cycles (frequency conversion). This is rarely practiced since it results in high conversion losses. Obtaining 50 cycle power from a wind turbine using a DC generator is much easier. The simplest, and most common method, is to invert the power at 50 cycle instead of 60 cycle - i.e., change the inverter.

Each of these methods for meeting Egypt's power standards have significant losses and inefficiencies associated with them. However, each method has proven technically successful in applications similar to the proposed Ras Ghareb wind farm. Since there is no definitive proof as to the costs and benefits associated with each method, a recommendation for a specific method at Ras Ghareb cannot be made. Bidder's designs should be evaluated on a case-by-case basis.

4.1.4 Sensors, Controls and Brake

Wind generators require sensors primarily for monitoring rotor speed and wind speed. For machines which do not freely yaw into the wind a sensor for wind direction and rotor blade orientation are required. The most important

sensors, however, are those for monitoring wind speed and rotor RPM. These sensors are connected to the turbine braking control mechanism, which controls turbine operation during cut-in and cut-out windspeeds and prevents overspeed during high wind conditions. The sensors used in wind turbines are standard solid state devices which are relatively trouble free. They are selected by turbine manufacturers to meet specific control needs of a turbine and are normally not specified as part of a statement-of-work. Specific requirements for wind turbine sensors in Ras Ghareb may be influenced by the heat and salt-spray in the area.

Three primary methods exist for preventing rotor overspeed: (1) yawing the rotor out of excessive winds, (2) changing the pitch angle (feathering) to lower their loads; and (3) activating the machine's braking mechanism. The first method is used only on horizontal axis machines with mechanically controlled yawing. The second method is used only on machines with a variable pitch rotor. The third method can be implemented on most types of machines, and is the primary control mechanism for fixed pitch, free yawing machines and vertical axis turbines.

The braking method would be most appropriate at Ras Ghareb, especially if a fixed pitch machine is used. Since it adds less complexity to the wind turbine than the first two methods, the braking method should result in fewer maintenance problems.

Braking systems are extremely important for safe wind turbine operation, and are primarily required to prevent rotor overspeed. The most common types of braking system are a mechanically or hydraulically actuated disk brake.

In designing a braking system for a wind generator it is important to ensure that there will be adequate torque available to stop a machine, even at the point of maximum power output (in high winds). In addition, because braking loads the gearbox (the rotor inertia acts as a load during breaking), it is

important that this torque not be so high as to damage or reduce the life of the gearbox. The best combination of reliability, low maintenance and torque characteristics have been found in a two-stage electrodynamic braking systems. In such an arrangement the first stage consists of an alternating current dynamic brake, which lowers the frequency, thereby forcing the generator to slow the rotor and convert rotational energy to electrical energy. The second stage is a disc parking brake which engages shortly after the dynamic brake, bringing the rotor to a complete stop. This type of braking system is not available for turbines with a DC generator. Although relatively new, this braking system has proven successful in a number of commercially available wind generators.

A number of turbine manufacturers are designing their machines with a backup braking system, since brake failures are unacceptable during unscheduled utility power outages. The most common such design feature are tip speed brakes which, as their name implies, are located at the tips of each of the rotor blades. Each of the brakes operate independently, being triggered mechanically by the centrifugal forces associated with an overspeed. The deployment of any one of the brakes serves to limit rotor speed to safe limits. The tip speed brakes serve as an emergency back-up protection device and deploy only as a result of a failure of the primary braking system. They must be manually reset once they have been activated.

The type of braking system used at Ras Ghareb should contain a mechanically or hydraulically actuated disk brake and tip speed brakes, at a minimum. The alternating current dynamic braking system described above would be a nice feature, since it would decrease maintenance and prolong the life of the disk braking system, but is not essential for successful wind farm operation.

4.2 Structural Equipment

4.2.1 Tower

It is beneficial to install a wind system, be it vertical-axis or horizontal-axis, to capture the higher winds above the ground and to be well above any interference from the nearest trees and buildings. Wind turbine towers are subjected to two types of loads: weight, which compresses the tower downward, and drag, which tries to bend the tower downwind. Towers are made in two basic configurations: guy-wire supported, and cantilever or unsupported (sometimes called freestanding). Given these two basic structural configurations, towers can be constructed using wood poles (primarily for small turbines), steel or concrete pole structures as well as a lattice framework of pipe or steel.

The selection of a specific type of tower for Ras Ghareb is an important consideration for wind farm installation and maintenance. Guy-wire supported towers are usually the easiest to install since they can be tilted up, requiring minimum equipment or personnel. Tilt up towers also allow for ease of maintenance, since the tower can be tilted down and all maintenance performed on the ground. However, given the number of large cranes available at Ras Ghareb, which can be used for wind farm installation, these factors provide little incentive for installing guy-wire towers. Appropriate tower types for Ras Ghareb appear to be either steel or concrete pole, or steel or pipe lattice framework structures. Currently there are a number of concrete pole towers at Ras Ghareb used to support utility lines. These towers are resistant to the corrosive elements present at Ras Ghareb. Steel, the most common tower material, should only be used with corrosion protection and a preventative maintenance program which includes regular tower inspections and repairs.

Regardless of which tower design is selected, the overriding consideration

is the selection of a tower that can support the wind turbine in the highest wind possible at a particular site. The load that causes many towers to fail is a combination of turbine weight and tower drag. Tower failure is sometimes accelerated when destructive harmonics are established between a tower's natural frequencies and turbine rotor RPM characteristics.

Corrosion protection is an important part of preventive and periodic maintenance of a steel tower. It is difficult to specifically identify the causes of corrosion at a given site. There are a number of interrelated (and synergistic) factors. Besides humidity, the presence of hydrogen sulfide, sulfur dioxide, and cholorides can greatly accelerate corrosion. Ras Ghareb has an atmospheric salt content, as would be expected given its coastal location. More importantly, there appears to be an atmospheric concentration of hydrogen sulfide and sulfur dioxide, probably resulting from the oil drilling operations in the area. Sulfur dioxide in the atmosphere is one of the most corrosive elements to metals. Oxidation of sulfur dioxide to sulfur trioxide, and the subsequent formation of sulfuric acid provides a means which can dissolve protective films on metal. The corrosion rate with sulfur dioxide is most serious at relative humidities greater than 80%. Hydrogen sulfide is oxidized to sulfur dioxide within hours. Even in regions with relatively high ambient H_2S concentrations (greater than 100 parts per billion) ferrous metals are relatively unaffected by H_2S. The metals most susceptible to corrosion from H_2S are nickel, silver, and copper - a fact which is important for electrical contacts exposed to the atmosphere.[11]

Protection for structural steel in atmospheric conditions is usually done with some type of coating. Adequate surface pretreatment is important because any moisture or unremoved rust below the surface of the paint will eventually

---

[11] Atar, W.H., ed, Atmospheric Corrosion John Wiley & Son, 1982. Brown, P.W. and Masters, L.W., "Factors Affecting the Corrosion of Metals in the Atmosphere."

blister it. Paint surfaces will also need regular maintenance, especially in regions with atmospheric sulphides. The use of galvanized steel (steel dipped in zinc) protects the structure by using the zinc coating as a sacrificial anode. Its protective capability would last only until it was completely corroded away. The use of stainless steel to inhibit corrosion is fairly successful in the atmosphere, even in the presence of sulphur oxides. The disadvantages with stainless steel are its high price and its susceptibility to corrosion in the presence of chlorides, which are relatively common in coastal areas.

To determine the best method of controlling corrosion at a specific site, long term corrosion coupon testing is a simple low-cost technique. Coupons of exposed steel, galvanized steel, various stainless steel alloys, and coupons with various protective coatings should be left exposed a the site for periods of 6 to 12 months. By evaluating the corrosion of these coupons, the applicability of the different possibilities can be evaluated.

4.2.2 Foundation

Conventional engineering design practices are used to determine the type and size of a foundation for each particular application based on soil conditions, tower and turbine weight, and wind loads. Local, national and international building codes will detail the basis for foundation design. A professional structural engineer should be consulted to review/design a foundation for a particular application. Although a detailed soil analysis has not been performed at Ras Ghareb, the site visits conducted indicated soil conditions similar to those encountered at the California wind farms. Hence, foundation design and installation at Ras Ghareb should encounter no serious problems.

4.3 Wind Farm Instrumentation and Monitoring

There are two basic requirements that the field test instrumentation and monitoring system must satisfy. The system must (1) have a sufficient

number of input channels (both analog and pulse) to monitor all the necessary parameters for a field test, and (2) store the data for a reasonable, time period (one month minimum) and provide these stored data in a standard format for analysis.

The primary purpose of the monitoring system is to provide information on certain critical wind farm performance variables such as energy production, availability, power output, run time, start/stop cycles, machine status, utility status and wind speed and direction. Usually attached to the monitoring system is a small control box, which houses emergency start/stop equipment in case of turbine overspeed. Most wind turbine manufacturers provide a separate monitoring panel with each turbine, sometimes referred to as a data collection unit (DCU). However, multiple turbines can be connected into one DCU (Exhibit 9). The arrangement is dependent on the size of the DCU's, the number of turbines and the amount of data being collected from each turbine. The DCU's are usually connected to an on-site host computer which collects information from all wind turbines. Software is commercially available which archives data and generates printed reports and screen displays for the system operator.

Conventional wind farm monitoring systems are hardwired. There is a physical link, usually an RS-232 cable, connecting the wind turbines, the DCU and the host computer. A new concept which is currently being promoted is a "wireless" approach to wind farm monitoring. Such systems use both radio communications and two-way power line carriers, and are an extension of similar wireless monitoring and control systems used in other industries. Operating experience for these systems is limited due to the very small number of installations.

The physical arrangement of the monitoring system at Ras Ghareb is not a primary concern as long as sufficient information is being collected from each turbine to (1) ensure proper wind farm performance, (2) aid in trouble shooting,

Exhibit 9.

WIND FARM MONITORING SYSTEM ARRANGEMENTS

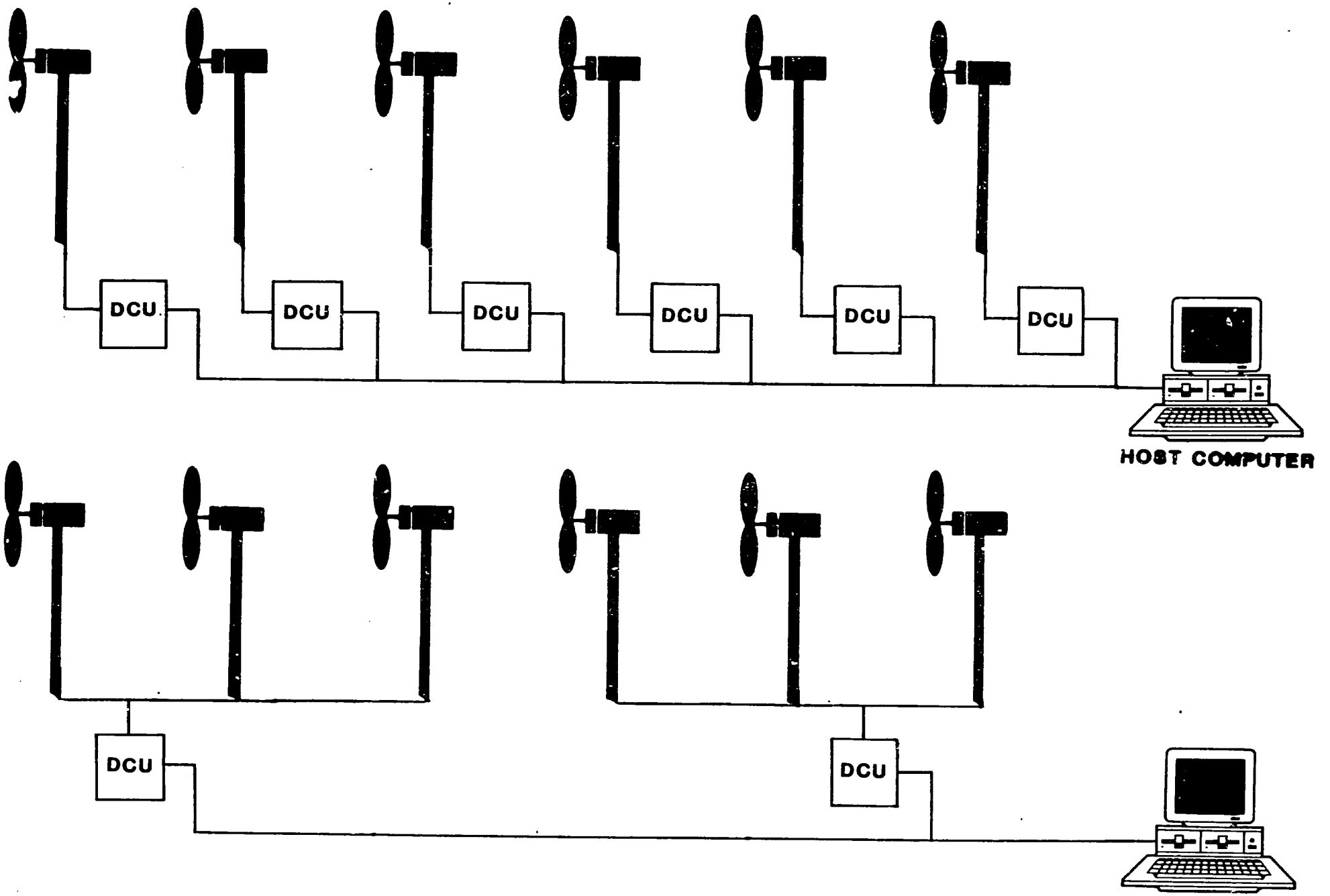

and (3) provide sufficient information for education and training purposes, the physical configuration is irrelevant. The DCU's should, however, be hardwired to the turbines and computer to minimize system cost and improve reliability.

An instrumentation system specification and a data requirements list were prepared following a sub-contractors meeting held on December 10, 1985, at Meridian Corporation. These items, provided as Appendix A, presents the preliminary performance data requirements for Field Test #11.

4.4 System Interconnection

Grid connected wind farms require transformers, switchgear, protective relays and suppressors before interfacing with a utility's transmission lines. A wind farm can be connected to a grid at a single point, or clusters of turbines can be connected at various points along a transmission line. Since the proposed wind farm at Ras Ghareb is relatively small, it is probably safe to connect to the grid at a single point. This would require only one transformer and minimze the number of switches, relays and suppressors needed for a safe system. All required equipment is standard in the electric utility industry.

The most common technologies used to interconnect dispersed sources to date are induction generators, synchronous generators, line-commutated inverters and self-commutated inverters. It is firmly established that these technologies can be safely, reliably and economically used interconnected to utility systems. In fact, industrial precedents that have been in use for many years exist for all these technologies. The application of these technologies in grid-connected wind farms is unique in the fact that the net power flow is in the opposite direction of what is commonly experienced , i.e., net power flow is to the utility grid instead of from the grid.[12] The interconnection technology

---

[12] Meyer, H. "The Interconnection of Dispersed Power Systems: Crisis or Business as Usual," Rural Electric Wind Energy Workshop, June 1-3, 1982, Boulder, CO, pp 279-283

INTERCONNECTION TECHNOLOGY	NUMBER OF SYSTEMS	CAPACITY (MEGAWATTS)	EARLIEST INTERCONNECTION
Line-Commutated Inverters	1500	8	1975
Self-Commutated Inverters	25	3	1980
Induction Generators	2000	10	1977
Synchronous Generators	9	10	1977
SOURCE: See Footnote #12			

Exhibit 10. Estimated Number of Interconnection Systems On-Line in the U.S. as of December 1980.

appropriate for Ras Ghareb is dependent on the type of generators used. Exhibit 10 provides rough estimates of the number of systems on-line employing these technologies and the approximate interconnected capacity. These numbers have increased substantially in the past few years.

Protective relays are the most important safety component for grid connected wind farms. The prime intent of a protective relay is to isolate a faulty circuit so that the remainder of an electrical network can continue to deliver power without interruption or unnecessary hazards. The most commonly needed relays in an interconnected generation system are: over-current, over- and under-voltage, over- and under-frequency, differential, and relays that detect the direction of power flow.

Some of the major concerns with grid-connected wind farms are:

1. Safety for operating and service personnel, and equipment;
2. Transient and dynamic stability behavior;
3. Effect of power variability on system dispatch and unit commitment;
4. Optimum bus configuration and voltages for array interconnection; and,
5. Array control.

4.4.1 Safety

The ability of an interconnected WECS to de-energize or disconnect from

the electric utility service quickly after a utility outage is probably the most important WECS electrical system characteristic. This characteristic relates directly to the safety of utility maintenance personnel, the safety of the WECS owner, protection of utility equipment, protection of parallel connected loads, and protection of the WECS electrical system.

The ability of a WECS to self-excite or energize the utility lines is a function of the characteristics of the WECS electrical system, the equipment and safety protection devices installed, and the electric utility line impedance characteristics seen by the WECS electrical system. Therefore, each utility interconnection technology utilizes different protective devices to ensure reliable de-energization or disconnection from the utility during utility outages.

There have been many investigations resulting in many opinions concerning how different types of interconnected WECS (i.e., those using synchronous generators, induction generators, or inverters) will react after a utility outage occurs. Unfortunately, there is no consensus of opinion nor has there been sufficient field experience to provide a basis for specific recommendations. Possible utility line configurations and impedances cover a very broad spectrum. Therefore, reliable and cost-effective methods for ensuring no self-excitation at Ras Ghareb will require good engineering design and testing by the manufacturer in conjunction with constant review of WECS operating experience in the field by the manufacturer and the utility.

Much discussion has centered around the need and location of a manual disconnect switch. A manual disconnect switch is a necessary backup to the automatic disconnect requirements outlined above. Its location, from a utility standpoint, should probably be next to the service drop or lateral metering location. One of the current discussions concerning the use of a manual disconnect switch is that a utility line crew may use the switch to ensure that the utility lines are not being energized by an interconnected WECS. Since it may seem

cumbersome and impractical for line crews to spend their time opening and closing large numbers of disconnect switches dedicated to individual turbines some other method for assuring safety would seem desirable. Such methods might include different distribution line sectionalizing procedures which isolate only the portion of line being worked on and minimize the number of interconnected WECS located on that line.

4.4.2 Stability

It is necessary that utility and/or wind disturbances do not excite growing oscillatory variations in WECS parameters such as stress, torque, current and power output. These parameters in a generator should be rapidly damped after disturbances such as wind gusts, short circuits, and surges from switching or lightning. Stability of a WECS depends not only on its design but on the parameters of other WECS and other lines and generators in the utility system. Fortunately, electrically and mechanically (wind) produced transients are largely decoupled due to the high rotor inertia and soft connection between the rotor and generator. Stability problems at Ras Ghareb should be no different than those encountered at small wind farms in the U.S.

4.4.3 Power Varibility

Sudden increases in WECS array output forces conventional generators to "unload" at high rates. The reverse situation is a decrease in array output during load pickup which requires increased "quick pickup" capacity. Since the effects are directly related to WECS capacity penetration and wind characteristics, the following must be noted:

- Conventional generators used for system power regulation may incur extra maintenance and fuel costs as they try to compensate for variations in wind farm output.
- The schedule of assigned generators (unit commitment) will require changes if wind variations are large.

- The effects from variable wind farm output are most severe for isolated utilities.

4.4.4 Optimum Array Electrical Configuration

Electrical configuration means the connection of WECS in an array by a network of transformers and lines arranged to avoid excessive fault currents, excessive losses, and with minimum interaction and maximum reliability. It is not yet clear what electrical configurations for interconnecting WECS in arrays are best. Designs must be evaluated on a case-by-case basis.

4.4.5 Array Control

It is possible, but not certain, that array controls implemented via computers and data links to each WECS in an array will ameloriate the severity of the above problems. In general, array control strategies should account for the expected range of wind conditions; the spacing of WECS in an array; the method of interconnection; and the regulating, load following, and unit commitment capability of the utility. Once again, array control systems must be evaluated on a case-by-case basis.

4.4.6 Electrical Protection

If WECS power output could be maintained at constant levels, designing protection for utility feeders would be straightforward. However, the intermittent nature of wind precludes this. The most common electrical protection problem occurs during high gusty wind conditions and a relatively small demand on the utility grid. Under this condition a phase unbalancing can occur between the main feeders connected to the grid causing system relays to trip or, worse yet, voltage fluctuations throughout the grid. Utility-grade protective relays with adjustable over-under frequency and voltage sensors are available to protect against such problems.

5.0 U.S. WIND TURBINE MANUFACTURER PROFILES

The U.S. wind system industry at the end of 1984 consisted of approximately 30 manufacturers of wind turbines. Of these, approximately fifteen manufacturers had sold a significant number of turbines in 1984 ranging in size from a few hundred watts to hundreds of kilowatts. Two U.S. companies sold Darrieus (vertical axis) wind turbines of about 200 kilowatts peak power, the remaining companies manufactured horizontal axis turbines, both upwind and downwind.

The following paragraphs are brief corporate profiles of a range of companies, representative of the U.S. wind industry technology, that are very active in sales in the U.S. Points-of-contact for these companies are provided whenever possible. Data for these summaries are taken from the manufacturer's product literature, the American Wind Energy Association Membership Directory for 1985, and the Wind Energy Directory for 1984, a special issue of the Wind Power Digest magazine.

5.1 Bergey Windpower Company Inc.

Mailing Address:	2001 Priestley Ave. Norman, OK 73069
Telephone:	405-374-4212
Chief Executive:	Karl Bergey
Sales Contact:	Michael Bergey
Purchaing Contact:	Beverly Binns

Company Products & Services:

Bergey Windpower manufacturers and distributes wind turbine generators with power outputs in the range of 1.0 kW to 10.0 kW peak. All units incorporate direct drive low speed permanent magnet alternators, passive overspeed controls, and high strength composite rotor blades. Units are available in both battery-charging and utility-interconnect versions. Bergey sells most of their wind turbines for rural, agricultural applications in Texas and Oklahoma. Bergey has sold hundreds of the

BWC Excel-10, their largest turbine at 10 kW peak power. The company has been in business for seven years.

5.2 Earth Energy Systems, Incorporated.

Mailing Address: 250 Prairie Center Dr., #390
Eden Prairie, MN 55344
Telephone: 612-829-1933

Chief Executive: Robert D. Schmidt
Sales Contact: Emil E. Ebner
Purchasing Contact: Russell Skoglund

Company Products & Services:

Wind turbines and wind farm development, including hybrid systems of wind, solar, batteries (where required) and microprocessor controllers. Earth Energy Systems was previously known as Jacobs Wind Electric Company. The firm has been manufacturing wind turbines since the mid-1920's. Recently the company acquired the Windcharger Corporation, a manufacturer of stand-alone diesel generators for industrial, construction, consumer and agricultural markets since 1935. Earth Energy Systems manufactures 17.5 kW and 20 kW wind turbines. They have recently developed a hybrid power plant that consists of a 10 kW wind turbine, a 500 watt PV panel and a custom-sized battery system, all controlled by a power management system for remote, stand-alone operation. Earth Energy Systems has wind farms in California and Hawaii.

5.3 Carter Wind Systems

Mailing Address: Rt. 1 Box 405-A
Burkburnett, TX 76354
Telephone: 817-569-2238

Chief Executive: J.W. Carter, Jr.
Sales Contact: Leslie Kemp
Purchasing Contact: Horatio L. Urioste, Jr.

Company Products & Services:

Carter Wind Systems was formed in 1976. From 1976 to 1979, Carter worked on development of a 25 kW system. To date over 500 of these machines are in operation. In 1981 development of a 250 kW machine began. To date over 22 of these turbines have been sold and installed. Carter recently upgraded the machine to 300 kW peak power. By the end of 1985, Carter will have installed 21 of the 300 kW model and plans to have sold 100 more of the 25 kW model.

5.4 Enertech Corporation

Mailing Address:	P.O. Box 420 Norwich, VT
Telephone:	603-448-5550
Chief Executive:	Emile Coulon
Purchasing Contact:	John Robichaud

Company Products & Services:

Manufacturers 60, 40, 25, 5, and 1.8 kW induction generator wind systems. A 300 kW system will be available in mid-1985. Enerech sells to wind farm developers direct. They can provide turn-key wind farm installations, monitoring systems, service/maintenance, and operations management. Enertech has been manufacturing wind systems since 1978, with over 1800 turbines now in operation. Enertech turbines are used in numerous wind farms in California, Massachusetts and elsewhere.

5.5 Wind Power Systems, Incorporated

Mailing Address:	9279 Cabot Dr. San Diego, CA 91216
Telephone:	619-566-1806
Chief Executive:	Edmund Salter

Company Products & Services:

Wind Power Systems is a dealer/distributor of wind farm/commercial and residential/farm wind energy systems. The company is also a wind farm project developer. They have been in business for nearly 10 years. Since 1977 Wind Power Systems has produced the Storm Master Model 12, a 60 kw peak power turbine for turn key wind farm sales. Over 260 Storm Masters are installed in California wind farms in Tehachapi and Altamont Pass. A total of over 425 turbines are installed throughout California.

5.6 International Turbine Manufacturing

Mailing Address: 6591 Sierra Way
Dublin, CA 94568
Telephone: 415-833-0400

Company Products & Services:

International Turbine Manufacturing (ITM) is the successer to Energy Sciences, Inc. (ESI). ITM/ESI has been manufacturing wind turbines for about 5 years for wind farm applications. For three separate developers in the Altamont Pass in California, ITM/ESI has provided 108, 75 kW turbines; 202, 80 kW turbines and one 250 kW turbine as of January 1985. On January 10, 1986 ITM filed for protection from creditors under Chapter 11 of the U.S. Bankruptcy Code while they reorganize.

5.7 North Wind Power Company

Mailing Address: P.O. Box 956
Moretown, VT 05660
Telephone: 802-496-2955

Chief Executive: Alvin Duskin
Sales Contact: Joseph Jankowski
Purchasing Contact: Steve Hamblin

Company Products & Services:

North Wind Power specializes in high reliability wind turbines and hybrid renewable energy systems for remote power applications. They currently manufacture three wind turbines models; the HR1, a 1 kW, 3 meter machine; the HR2 a 3 kw, 5 meter machine; and the MB916 a 16 kW, 9 meter machine. They also manufacture two hybrid power system controllers, the SC374 and the SC351. A 100 kW, 17 meter wind turbine that will be introduced in 1986 is currently under field test.

5.8 VAWTPOWER, Incorporated

Mailing Address: 134 Rio Rancho Dr.
Rio Rancho, NM 87124
Telephone: 505-892-9463

Chief Executive: Paul N. Vosburgh
Sales Contact: Kimberly L. Southard
Purchasing Contact: Diane K. Norris

Company Products & Services:

The VAWTPOWER 185 is 200 kW capacity vertical axis wind turbine for windfarm, utility and agribusiness applications. The VAWTPOWER 055 is 50 kW capacity VAWT for agribusiness, extractive resource, municipality and export applications. The company has been in business for approximately 3 years. Twenty-four VAWTPOWER 185 wind turbines were installed in San Gorgonio Pass near Palm Springs, CA in 1984 for a total of 38 in the area. The company planned to produce over 60 turbines in 1985.

5.9 FloWind Corporation

Mailing Address: 1183 Quarry Lane
Pleasanton, CA 12054
Telephone: 415-484-3300

Chief Executive: Yi Hao (Michael) Pao
Sales Contact: Hugh Rose

Company Products & Services:

FloWind Corporation, an integrated wind energy company, designs, engineers, sites, finances, installs and operates its own turbines and windfarms. It had approximately 350 vertical axis 17 meter and 19 meter turbines operating commercially by mid-1985. This is the largest number of Darrieus turbines in the world. FloWind also produces wind-diesel and other hybrid systems, and advanced energy storage facilities. As of January 1985, FloWind had installed 128, 170 kW turbines and 21, 250 kW turbines in Altamont Pass. The company has been in business since 1982.

5.10 Micon Wind Turbines, Incorporated

Mailing Address:	9595 Wilshire Blvd. Beverly Hills, CA 94550
Telephone:	213-273-0993
Chief Executive:	Erling Moerup
Sales Contact:	Peter Jensen

Company Products & Services:

Manufacturer of a complete line of wind turbine generators including: 22 kW, 65 kW and 108 kW models for wind farms, as well as stand alone installation. Standard features include a lockable tubular tower and a microprocessor based control panel with a standard RS-232 interface which can be linked via modem to an optional Micon computer management system. Micon is a Danish firm that has recently opened a U.S. manufacturing facility. Over 100 Micon turbines currently installed in California were manufactured in the U.S. Micon has 212, 60 kW turbines installed in a wind farm in Altamont Pass.

5.11 Windtech, Incorporated

Mailing Address: 155 Sycamore Street
P.O. Box 837
Glastonbury, CT 06033
Telephone: 203-659-3786

Chief Executive: M.C. Chenery

Company Products & Services:

WINDTECH was formed in 1981 to manufacture a wind turbine using a composite bearingless rotor concept developed for Sikorsky Aircraft Corp. WINDTECH manufacturers three models of wind turbines; 20 kW, 50 kW and 75 kW. In 1983, 156 of the 75 kW units were installed in the Tehachapi Valley near Los Angeles, CA.

5.12 U.S. Wind Power

Mailing Address: 500 Sansome St. #600
San Francisco, CA 94111
Telephone: 415-455-6012

Chief Executive: Gerald Alderson
Sales Contact: Robert T. Boyd

Company Products & Services:

Windfarm/commercial WECS; project developer. The company manufacturers its own 50 kW and 100 kW turbines and installs them on its own financed and developed wind farms. As of January 1985, U.S. Windpower had installed 735, 50 kW turbines and 601, 100 kW turbines in the Altamont Pass.

5.13 Fayette Manufacturing Company

Office Address:	15885-B Altamont Pass Rd.
Mailing Address:	P.O. Box 1149 Tracy, CA 95376
Telephone:	415-443-2929
Chief Executive:	John E. Eckland
Sales Contact:	Dick Hall

Company Products & Services:

Windfarm/commercial WECS, project developer. The company manufactures its own 75 kW, 95 kW and 400 kW wind turbines and either installs them on its own wind farms or sells to other developers. As of January 1985, Fayette had installed 247, 75 kW turbines; 1,178, 95 kW turbines and 34, 400 kW turbines in the Altamont Pass.

6.0 U.S. WIND INDUSTRY PRODUCTS

The U.S. wind industry offers a wide variety of equipment including: small, medium and large scale wind generator systems, both ac and dc; towers; rotors; controllers, inverters and converters; and mechanical and electrical end-use equipment. Individual WECS components can be obtained from respective manufacturers, or their distributors; turn-key systems can be purchased through systems integrators and some turbine manufacturers. Several of the major manufacturers also supply packaged systems for certain applications.

This chapter organizes U.S. manufacturers' products required for grid connected WECS application. Information is summarized in matrix format by component, as follows:

- Wind Turbines (Exhibit 11)
- Towers (Exhibit 12)
- Monitoring Systems (Exhibit 13)
- Interconnection Equipment (Exhibit 14)
- Miscellaneous Equipment (Exhibit 15)

The information presented is based on product literature obtained through catelogues, directories and mailings to U.S. manufactures. Much of this literature is included in the Wind System Technology Reference Notebook (WSTRN). Manufacturers and products for which sufficient information is available are included in these summary matrices. As more information becomes available the matrices will be updated and product literature will be added to the WSTRN.

Appendix B presents the names and addresses of all the manufacturers identified in the matrices.

FEATURE / MANUFACTURER	RATED OUTPUT (kW)							RATED WIND SPEED (meters/second)						CUT-IN WIND SPEED (m/s)		CUT-OUT WIND SPEED (m/s)			ELECTRICAL OUTPUT	
	≤10	11-20	21-35	36-50	50-100	101-200	>200	<10	10-12	13-14	15-16	17	>18	2-3	4-5	17-19	20-23	>23	AC	DC
ADVANCED ENERGY		●							●						●				●	
AEOLIAN ENERGY INC.	●													●		←	none	→	●	
ASTRAL WILCON		●									●				●	←	none	→	●	
BERGEY WINDPOWER	●								●					●		←	none	→	●	
CARTER WIND SYSTEMS			●				●		●				●	●	●	←	none	→	●	
EARTH ENERGY SYSTEMS	●	●						●	●					●			●		●	
ITM/ESI					●		●		●						●			●	●	
ENERTECH		●	●	●				●	●	●					●		●	●	●	
FAYETTE MFG. CORP.					●		●							●			●		●	
FLOWIND					●	●						●			●		●		●	
HUMMINGBIRD WIND POWER	●													●				●	●	
INTERNATIONAL DYNERGY								●	●	●					●		●	●	●	
KW CONTROL SYSTEMS			●						●						●	●			●	
LAKESTATE SYSTEMS															●		●		●	
MICON			●		●	●				●	●				●	←	none	→	●	
NORTH WIND POWER	●	●				●		●				●		●				●		●
PRODUCT DEVELOMENT	●								●						●		●		●	
U.S. WINDPOWER					●					●					●		●		●	
VAWTPOWER					●						●				●		●		●	
WHIRLWIND POWER	●								●					●		●			●	
WIND-POWER INC.	●														●	←	none	→	●	
WIND POWER SYSTEMS INC.					●							●			●			●	●	
WINPOWER	●								●						●	←	none	→	●	
WINDTECH		●			●						●				●	←	none	→	●	
WIND TECHNOLOGIES		●							●						●	←	none	→	●	

Exhibit 11. WIND TURBINES

FEATURES / MANUFACTURER	TYPE		TOWER SUPPORT		HEIGHT						
	POLE	LATTICED	GUYED	FREE-STANDING	<15 METERS	15-17 METERS	18-23 METERS	24-29 METERS	30-35 METERS	35 METERS	> 35 METERS
BERGEY WINDPOWER	●		●					●	●	●	
CARTER WIND SYSTEMS	●		●				●	●			●
EARTH ENERGY SYSTEMS		●		●			●	●	●	●	●
ENERTECH		●		●				●			
ITM/ESI		●		●				●			
INTERNATIONAL DYNERGY	●		●	●		●	●				●
KW CONTROL SYSTEMS	●		●				●				
LAKE STATE SYSTEMS	●	●		●				●	●		
NORTH WIND POWER		●	●	●	●						
PRODUCT DEVELOPMENT					●		●	●	●		
ROHN*		●	●	●	●	●	●	●	●	●	●
WHIRLWIND	●	●	●	●	●	●	●	●	●		
WIND POWER SYSTEMS		●		●			●				
WINDTECH	●			●		●					

*Towers not part of total wind system

Exhibit 12. TOWERS

Exhibit 13.
WIND FARM MONITORING

MANUFACTURER \ FEATURE	MONITORING	CONTROL	HARD-WIRED	RADIO COMMUNICATION	POWERLINE CARRIER
ATMOSPHERIC RESEARCH & TECHNOLOGY	●		●		
CAMBELL SCIENTIFIC	●		●		
CARTER	●	●	●		
ENERTECH	●		●		
MOTOROLA	●	●		●	
OTECH ENGINEERING	●		●		
Q-COM	●	●		●	●
SECOND WIND	●		●		

Exhibit 14.
INTERCONNECTION EQUIPMENT

MANUFACTURER \ EQUIPMENT	TRANSFORMERS	SWITCHGEAR	RELAYS	SUPPRESSORS	INVERTERS	RECTIFIERS	FREQUENCY CONVERTORS
ABAWS					●		●
ABBOTT POWER		●					
ACHEVAL					●		
ADVANCED ENERGY					●		
AMERICAN POWER CONVERSION					●		
AMERICAN SWITCH GUARD		●					
AUTOMATIC SWITCH			●				
BECKWITH ELECTRIC CO. INC.				●			
BECO-HEIMAN		●					
BERGEY WINDPOWER					●	●	
BEST					●		
BRUCE ELECTRIC EQUIPMENT	●						
CONSOLIDATED ELECTRIC SYSTEMS		●					
CONTROL CORPORATION OF AMERICA			●				
CONTROL POWER SYSTEMS		●					
DCC INC.				●			
DENGAN ELECTRIC	●						
DUCTOOL			●				
DYTECH					●		
EATON			●				
ELECTRICAL EQUIPMENT		●					
ELECTRICAL INDUSTRIES		●					
ELECTRIC CONTROL EQUIP.		●					
ELLIOT INDUSTRIES		●					
EMPIRE		●					
GENERAL ELECTRIC	●	●	●	●			
GENERAL INSTRUMENT CORP.				●			
GENERAL SWITCH		●					
GNB						●	

MANUFACTURER \ EQUIPMENT	TRANSFORMERS	SWITCHGEAR	RELAYS	SUPPRESSORS	INVERTORS	RECITIFIERS	FREQUENCY CONVERTORS
GOULD		●					
GTE	●						
GTE SYLVANIA			●				
HARLO		●					
H.B. INSTRUMENT CO.			●				
HEART INTERFACE					●		
HELIONETICS					●		●
H.N. PORTER	●						
J. PHILLIPS INDUSTRIES				●			
KEARNEY		●					
KELGO ELECTRONICS				●			
LAKE SHORE ELECTRIC		●	●				
LEA DYNATECH INC.				●			
LEONARD WARD ELECTRIC CO.			●				
LINE ELECTRIC PRODUCTS			●				
LOGICOMP ELECTRIC			●				
MACK ELECTRIC DEVICES			●				
MAGNECRAFT ELECTRIC			●				
MAGNETIC POWER CONTROL	●						
MARELCO POWER SYSTEMS	●						
MASSACHUSETTS ELECTRICAL		●					
MATRA ELECTRIC	●						
MCGRAW EDISON	●						
MERCURY SWITCHES			●				
MGM TRANSFORMER	●						
NATIONAL INDUSTRI TRANSFORMERS	●						
NIAGARA TRANSFORMER	●						
NOVA ELECTRIC					●		●
OHIO TRANSFORMER	●						

Exhibit 14.
INTERCONNECTION EQUIPMENT continued

MANUFACTURER \ EQUIPMENT	TRANSFORMERS	SWITCHGEAR	RELAYS	SUPPRESSORS	INVERTERS	RECTIFIERS	FREQUENCY CONVERTORS
PILGRIM ELECTRIC CO.				●			
POLYPHASER CORP.				●			
POWERMARK					●		●
POWER SYSTEMS ANALYSIS	●	●					
RECTIFIER ENGINEERING & SUPPLY				●			
RELAYS INC.			●				
R-K ELECTRIC CO.				●			
RKS INDUSTRIES				●			
SASSER ELECTRIC	●						
SATIN AMERICA		●					
S&C ELECTRIC		●					
SIEMENS/BIOXCOM			●				
SOLA ELECTRIC	●						
SOUTHERN CONSOLIDATED CORP.				●			
SUPERIOR ELECTRIC CO.				●			

MANUFACTURER \ EQUIPMENT	TRANSFORMERS	SWITCHGEAR	RELAYS	SUPPRESSORS	INVERTERS	RECTIFIERS	FREQUENCY CONVERTORS
TELEDYNE RELAYS				●			
TESLACO					●		
TRIAC ELECTRONIC SYSTEMS				●			
TRI-MAG			●				
TRIPP LIT					●		
TRW INC.					●		
VANGUARD RELAYS			●				
VIBOTRANSFORMERS	●						
WARRICK CONTROLS			●				
WEAVER ELECTRIC		●					
WESTINGHOUSE ELECTRIC	●	●	●				
WHIRLWIND			●				
WILMER					●	●	
WINDWORKS					●		
W.W. GREINGER				●			

Exhibit 15.

MISCELLANEOUS EQUIPMENT

MANUFACTURER \ EQUIPMENT	GENERATORS	ROTORS	GEAR BOXES	ALTERNATORS	REGULATORS	SENSORS CONTROLS
ADVANCED ENERGY					●	
AEOLIAN ENERGY		●				
AMERICAN HI-TECH						●
BOSS					●	
BRAD FOOT GEAR WORKS			●			
COLUMBINE FABRICATORS						●
CONSOLIDATED ALUMINUM		●				
DRESSER INDUSTRIES			●			
FLENDER CORP.			●			
GOUGEN BROTHERS		●				
HELIOTROPE GENERAL					●	
HERMANN ROTOR		●				
NATURAL POWER				●		
NORTH WIND POWER					●	
SANTA ROSA POWER		●				
SPECIALTY CONCEPTS					●	
STARK HENGELO		●				
SWX CORP.	●					
TIDELAND					●	
WINCO	●					
WIND TECHNOLOGIES					●	

7.0 WIND FARM APPLICATIONS IN THE U.S.

Most grid-connected wind farm applications in the United States are located in California. There are a few wind farms located elsewhere in the U.S., for example in Oregon, Texas, Hawaii, Montana and New York, but their combined contribution to total installed U.S. wind farm capacity is less than 2 or 3 percent.

7.1 California Wind Farms

In 1984, windfarms in California generated a total of over 183 million kWh of electricity. In 1985, this total will be more than tripled. By the end of November 1985, 600 million kWh of electricity was generated.

The majority of wind generated electricity in Calforifnia is produced in three regions: Altamont Pass, located east of San Francisco (6.8 m/s mean annual wind speed at 10 meters); Tehachapi Mountains, located north of Los Angeles (7.7 m/s mean annual wind speed at 10 meters); and, San Gorgonio Pass, located east of Los Angeles (6.8 m/s mean annual wind speed at 10 meters). In comparison, available wind source data indicates a mean annual wind speed at Ras Ghareb of 7.3 m/s at 10 meters (see Application Review for Field Test # 11). As of the end of May 1985 over 4,200 wind turbines were installed in the Altamont Pass area, while 2,371 and 2,268 machines were installed in Tehachapi and San Gorgonio Passes, respectively. By the end of the first quarter of 1985, wind farms in California had produced 63.79 million kWh. By the end of April, the total for the year was up to 122.06 million kWh; and by the end of May, it was an estimated 208.39 million kWh. Exhibit 16 shows the amount of electricity produced by each of the wind farm areas for January through May 1985.

MONTH	CUMULATIVE TOTAL	MONTHLY TOTAL	ALAMONT PASS	TEHACHAPI MOUNTAINS	SAN GORGONIO PASS
January	6.94	6.94	1.86	2.29	2.79
February	22.16	15.22	7.70	5.04	2.48
March	63.79	41.63	14.90	11.49	11.54
1st Qtr	63.79	63.79	24.46	18.82	20.51
April	122.06	58.27	29.30	14.77	14.20
May	208.39	86.33	50.00	15.62	20.71
Total	208.39		103.76	49.21	55.42

Exhibit 16. 1985 California Wind Farm Energy Production in Millions of Kilowatt-Hours.

Source: Alternative Sources of Energy, September/October, 1985

7.1.1 Altamont Pass

Altamont Pass is the largest wind farm area in the U.S. Electricity production from Altamont Pass wind farms accounts for 50% of California's total wind generated electricity. Fayette Manufacturing and U.S. Windpower are the two predominant turbine manufacturers in the area. As shown in Exhibit 17, by the beginning of 1985 over 34% of all machines in Altamont Pass were Fayette, representing almost 40% of total installed capacity, while just under 32% were U.S. windpower turbines, representing 26% of total installed capacity.

7.1.2 Tehachapi Mountains

Wind projects in the Tehachapi Mountains have a combined capacity equal to about one half of those in the Altamont Pass. Zond Systems Inc., a wind farm developer, continues to be the leader in Tehachapi in terms of installed capacity, with Flowind Corp. a close second. Zond had installed over 500 turbines since 1981, all of which are either Danish or Dutch machines, with a total installed capacity of 31 megawatts.

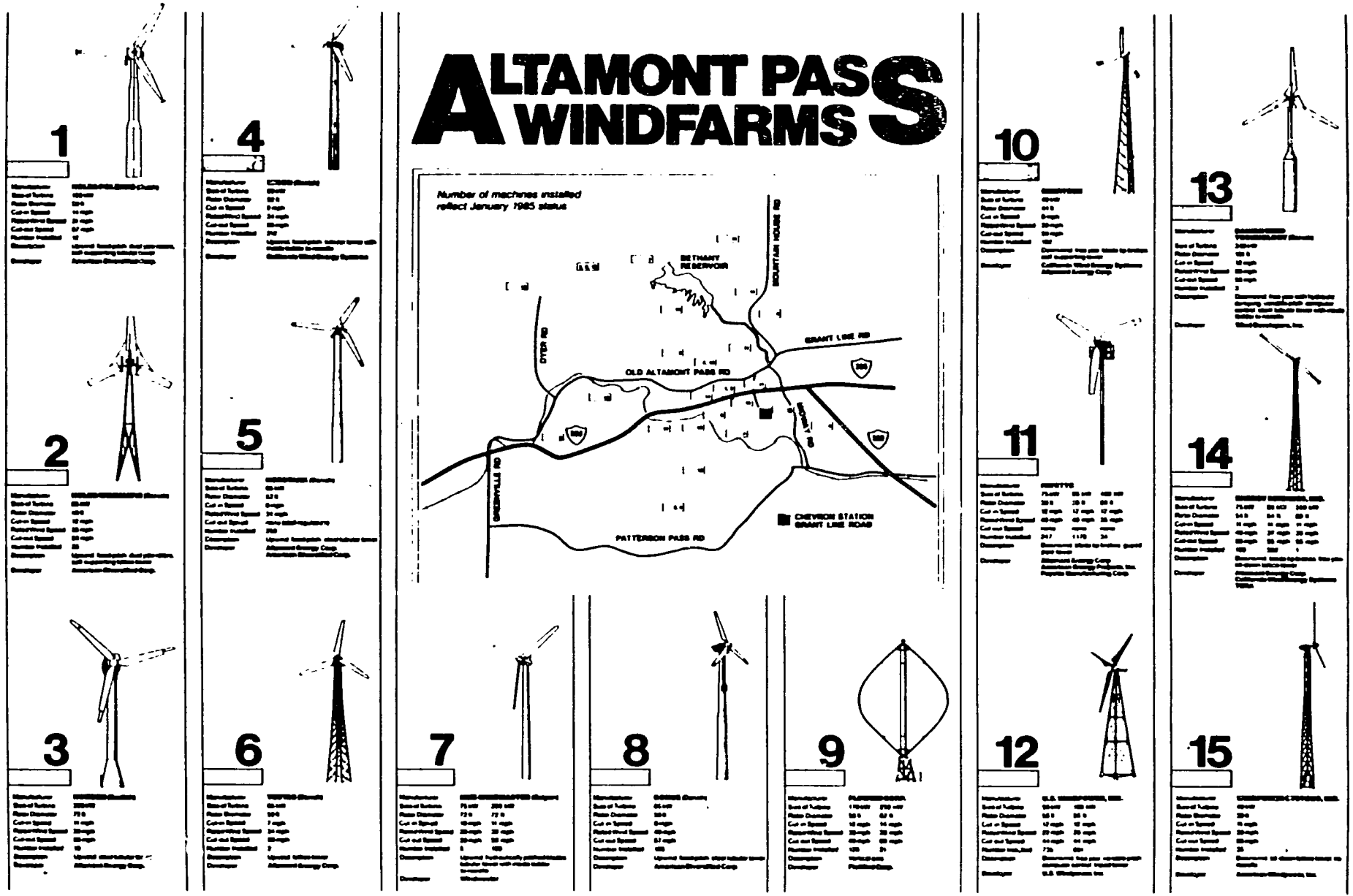

Exhibit 17.

ALTAMONT PASS WINDFARMS

SOURCE: U.S. Windpower, Inc.

Flowind Corp. installed 103 of its 17 meter turbines and 20 of its 19 meter vertical axis machines in Tehachapi in 1984, for a combined installed capacity of 22.5 megawatts.

Arbutus Corp., a wind farm developer active in the Tehachapi Mountains, has installed over 400 machines in the area, over 75% of which are Danish manufactured. During 1983 Arbutus installed 125 - 75 kW Windtech Inc. turbines. The turbines have produced well when operating, but have operated inconsistently. As a result, all of the Windtech machines underwent minor design changes throughout 1985 to increase their availability. Another developer active in the Tehachapi Mountain is Triad American Energy. To date they have installed approximately 38 ESI 54S and 6 ESI Model 80 Wind turbines.

Other manufacturers with turbines installed in the area are Nordtank, with approximately 140-65 kW machines and Carter, with approximately 12-250 kW machines and 24 Model 25's.

7.1.3 San Gorgonio Pass

Development in the San Gorgonio Pass area of California is growing rapidly despite the area's late start in wind farming. The total generating capacity installed in San Gorgonio in 1984 almost equalled that of Tehachapi. A large percentage of the installed turbines in the area are, however, manufactured outside of the U.S. U.S. wind turbine manufacturers and wind farm developers active in the San Gorgonio area are :

- International Dynergy Corp. of Palm Springs, Calf. sold one hundred ninety seven 80 kW American Windshark™ turbines in 1984. The company installed 70 of the turbines on its project near Palm Springs, Calif. in 1983.

- Renewable Energy Ventures (REV) a developer from Encino, Calif. completed the first phase of its planned 22 MW project in the San Gorgonio Pass by the end of 1984. REV installed two hundred eight 17.5 kW Jacobs Wind Electric and one hundred sixty eight ESI Inc. Model 54S wind systems. During 1985, REV has planned the installation of another 204 Jacobs systems, of which 54 will be the model 29-20.

- San Gorgonio Farms Inc. (SGF) a developer from Torrance, Calif. installed 104 wind systems having a combined capacity of 4.76 MW on its wind farm in the San Gorgonio Pass in 1984. The company installed fifty 25 kW Carter Wind Systems, ten 65 kW. Micon, and forty four Bonus wind turbines (a Danish machine) last year.

- One hundred thirty 65 kW Micon turbines and one hundred seventy five Enertech model 44/40 turbines were installed in San Gorgonio under the Altech II/Phoenix project.

- Triad American Energy, a developer from Newport Beach, California, installed 90 ESI Model 54S Wind systems on its Triad II project in San Gorgonio in 1984. The company had planned to add 76 ESI Model 54S units on its Triad I project, and 84 ESI Model 54S and 86 ESI Model 80 wind systems on its Triad VII project, in 1985.

- Energy Development and Construction Inc. of Palm Springs, Calif. installed twenty six 185 kW VAWTPOWER Inc., vertical axis turbines on its land in San Gorgonio in 1984. The company intends to install a total of up to 160 VAWTPOWER systems.

7.2 Other U.S. Wind Farms

7.2.1 Hawaii

Renewable Energy Ventures (REV), held a dedication ceremony in August of 1984 for its 3.4 megawatt wind farm project on the Kahua Ranch in Hawaii. One hundred ninety eight Jacobs 17.5 kW wind turbines are installed on the ranch. When operating at full capacity, the wind farm produces betwen five and 10 percent of Hawaii Electric Light Company's power requirements. REV has also installed 81 Jacobs 20kW and 39 Jacobs 17.5 kW wind turbines at Lalamilo, Hawaii. The 2.3 MW wind farm was scheduled for start-up at the end of 1985.

7.2.2 Massachusetts

Princeton Municipal Light Co. of Princeton, Massachusetts, has dedicated a 320 kW wind power project. The eight 40 kW Enectech 44 turbines account for about 15% of the utility's grid capacity. The project, which cost about U.S. $ 520,000 and took almost five years from initial conception to turbine rotation should generate nearly 1 million kilowatt-hours annually.

7.2.3 New Hampshire

TD Energy of Boston, Massachusetts installed ten Micon wind turbines on Mount Tug near Canaan, New Hampshire at the end of 1984. The company has plans to expand the project to 12 megawatts of installed capacity.

Bibliography

1. American Wind Energy Association, Directory of Wind Industry Manufacturers, 1985.

2. American Wind Energy Association Presentation at Electric Power Research Institute Workshop, February 26, 1985.

3. Battelle Pacific Northwest Laboratories, Interim Site Data Report - April-September, 1985, January 29, 1986.

4. Brown, P.W., and L.W. Masters, "Factors Affecting the Corrosion of Metals in the Atmosphere," In Atmospheric Corrosion, ed. W.H. Atar, John Wiley & Son, 1982.

5. Elliot, Dennis L., and et al, Meteorological Aspects of Siting Large Wind Turbines, Battelle Pacific Northwest Laboratories, January 1981.

6. Johnson, Gary L., Wind Energy Systems, Prentice-Hall, Inc., 1985.

7. Meridian Corporation, Wind Energy Systems Technology Reference Notebook, June 1985.

8. Meyer, Hans, "The Interconnection of Dispersed Power Systems: Crisis or Business as Usual," Rural Electric Wind Energy Workshops, June 1-3, 1982, Boulder, CO, pp. 279-283.

9. Park, Jack, and Dick Schwind. Wind Power For Farms, Homes and Small Industry, Nielsen Engineering and Research, Inc., September, 1978.

10. "Renewable, Cogen Continue Development Boom: WWI," Solar Energy Intelligence Report, February 16, 1986, Vol. 12, No. 7, p. 51.

11. Renne, David S., and Peter A. Borgo. Kite Anemometer Studies At The Proposed Ras Ghareb Wind Farm Site, Battelle Pacific Northwest Laboratories, Technical Memorandum BNW/EWRA-TM1, February 8, 1986.

12. "Wind Energy Directory for 1984," Wind Power Digest, Issue No. 26, 1984.

APPENDIX A

WIND FARM INSTRUMENTATION SYSTEM SPECIFICATIONS AND DATA REQUIREMENTS FOR FIELD TEST #11

SPECIFICATIONS FOR A FIELD TEST INSTRUMENTATION SYSTEM

The Renewable Energy Field Test instrumentation system will be used to monitor IPH, PV and wind energy system installations at urban and remote desert locations in Egypt. These energy systems include main power sources (solar collectors, PV arrays and wind turbines) as well as ancillary subsystems depending on specific field test applications. These subsystems include ice-making equipment, desalination systems, a variety of load characteristics ranging from small DC loads to grid-connected applications and back-up power systems (diesel engines and batteries).

The instrumentation system must be a stand-alone system. Failure of the instrumentation system must not affect the performance of the field test system that is being monitored. The instrumentation system must have an on-site data storage system that is non-volatile and capable of easy physical removal and transport to another location for data removal and long-term storage. One form of the non-volatile storage system must be a microchip/ EPROM or CMOSRAM - Type system that can be "milked" on site easily and without danger of a loss of data.

The instrumentation system must be a microcomputer based data logger with programmable input channels and output formats. The user must have control over sampling frequency and output period for each channel. Primary design objectives for the instrumentation system should be reliability, simplicity, small size, low power and the ability to operate in environmental extremes (especially high temperature, sand/dust and tropical/sea coast). The unit must be capable of stand-alone battery operation for a period of at least two months.

The following minimum specifications are required for the instrumentation system. If an exception must be taken to one or more of these requirements, the exception shall be noted and a clear explaination given as to why the

bidder believes that the exception should be acceptable to the purchaser.

Physical Specifications

- o Small, stand-alone, self-contained system in an environmental enclosure
- o Desired weight: less than 10 pounds
- o Desired size: less than 10 inches x 10 inches x 6 inches

System Power Requirements

- o Capable of operation using self-contained batteries
- o Capability for the use of an external power source to allow continued data collection while changing batteries or the use of a non-battery external power source is desirable.
- o Capable of transient protection from spurious electrical charges or lighting.

Environmental Specifications

- o Ambient Temperature: -25 deg. C to +50 deg. C
- o Relative Humidity: 0 to 90 percent non-condensing
- o Impervious to a tropical, oceanside environment with occasional high airborne sand/dust and/or sulphur levels

Analog Inputs

Number of Channels: At least 16 channels with 20 channels desirable

Voltage Measurement Types: Differential or single-ended

Accuracy of Measurements: at least $\pm$ 0.5 percent

Range and Resolution: Selectable for any input channel from microvolts to several volts full scale

Sample Rates: At least once per second for each channel

Pulse Inputs

Number of Pulse Counter Channels: at least 4 channels with 6 channels desired

Analog and Digital Control Outputs: a total of three resettable channels each is desired with a range of 0 to $\pm$ 5 volts with a 0.5 volt resolution

Output Signal Interface

Memory: Capable of storing at least 3000 data points per day for a period of one month (two months desirable)

Display: A visual display of stored data is required on-site for data verification before data removal

Peripheral Interface: Downloading of data at the site should be by physical removal of the data storage device or simple, reliable data downloading to a non-volatile storage device. Storage data files shall be IBM-PC compatible on floppy disc either directly from the data logger or through a simple, fast, reformatting technique.

Wind Farm at Ras Ghareb (Field Test #11)
Data Requirements

Item	Channel Type *	Sampling Frequency	Output Interval	Priority Want	Priority Must
Wind Speed	A	1 sec	10 min		x
Wind Direction	A		hourly		x
Peak Gust/Time	A		daily		x
Turbulance intensity	A		10 min		x
Ambient temp.	A		hourly		x
Humidity	A		hourly		x
Pressure	A		hourly		x
Longest Lull	A		daily		x
Sulphate Plate	(Manual)		(Manual)		x
Turbine Power	A	1 sec.	10 min		x
Rotor RPM	P		" "		x
Power factor	A		" "		x
Generator voltage	A		" "		x
Generator current	A		" "	x	
Inverter input voltage (if used)	A		" "		x
Inverter output voltage (if used)	A		10 min		x
On/off cycles	P		daily		x
Frequency	A		10 min		x

9 ("musts") x 6 samples x 24 hours = 1296
4 ("musts") x 24 hours = 96
3 ("musts") x 1 day = 3
Time Marks (6 x 24) = 144

Total = 1539 data points per day

16 channels

- o 2 pulse
- o 14 analog

(plus 8 channels per additional turbine)

- o 2 pulse
- o 6 analog

* A = Analog
P = Pulse

APPENDIX B

U.S. WIND ENERGY PRODUCT MANUFACTURERS

U.S. WIND ENERGY PRODUCT MANUFACTURERS

Abacus Controls, Inc.
P.O. Box 893
Somerville, New Jersey 08876
Phone (201) 526-6010
Telex 888186

Abbott Power Corp.
7650 Stage Rd.
Buena Park, California

Acheval Wind Electronics Company
361 Aiken St.
Lowell, Massachusetts 01803-4115
Phone (617) 453-0874

Advanced Energy Corporation
14933 Calvert St.
Van Nuys, California 91411
Phone (213) 782-2191

Aeolian Energy, Inc.
RD 4
Ligonier, Pennsylvania
Phone (412) 593-7905

American Hi-Tech
538 Haggard #402
Plano, Texas 75074
Phone (214) 578-1092

American Power Conversion Corporation
89 Cambridge St.
Burlington, Massachusetts
Phone (617) 273-1570

American Switch Guard Corp.
4278 Strausser St., NW
P.O. Drawer Box 2523
North Canton, Ohio

Astral Wilcon, Inc. (AWI)
P.O. Box 291
127 West Main St.
Millbury, Massachusetts 01527
Phone (617) 865-9570

Atmospheric Research & Tech. Inc.
6040 Verner Ave.
Sacramento, California 95841
Phone (916) 972-1137

Automatic Swich Co.
56-A Hanover Rd.
Florham Park, New Jersey

Balance of Systems Specialists, Inc. (BOSS)
7745 E. Redfield Rd.
Scottsdale, Arizona 85260
Phone (602) 948-9809
Telex 6835043

Beckwith Electric Co., Inc.
11013 62nd St., N.
Larga, Florida

Beco-Helman Inc.
430 First Ave. N.
Minneapolis, Minnesota

Bergey Windpower
2001 Priestley Ave.
Norman, Oklahoma 73069
Phone (405) 364-4212

Best Power Technology, Inc.
P.O. Box 280
Necedah, Wisconsin 54646
Phone (608) 565-7200
Telex 701934

Brad Foote Gear Works
1309 S. Cicero Ave.
Cicero, Illinois
Phone (312) 242-1070

Bruce Electric Equipment Corp.
131-A Akron St.
P.O. Box 558
Lindenhurst, New York 11757
Phone (516) 226-2424

Cambell Scientific, Inc.
P.O. Box 551
Logan, Utah 84321
Phone (801) 753-2342
Telex 453058

Carter Wind Systems, Inc.
Route 1 - Box 405 A
Burkbunett, Texas 76354
Phone (817) 569-2238

C&D Power Systems
(Allied Corporation)
3043 Walton Rd.
Plymouth Meeting, Pennsylvania 19462
Phone (215) 828-9000
Telex 681059 CD BAT UW

C-E American Pole Structures
8700 Fairbanks North
P.O. Box 40020
Houston, Texas
Phone (713) 466-6761
Telex 791-028

Chloride
P.O. Box 12936
Tallahassee, Florida 32308
Phone (904) 385-5686

Columbine Fabricators
1451 W. Tufts Ave.
Englewood, Colorado 80110
Phone (303) 761-2121
Telex 3720473

Consolidated Aluminum
11960 Westline Industrial Dr.
St. Louis, Missouri 63146
Phone (314) 878-6950

Consolidated Electrical Systems Inc.
202-T E. Robert St.
P.O. Box 2804
Hammond, Louisiana

Control Corporation of America
57996 CR-9 S. Dept. T
Elkhart, Indiana

Control Powers Systems Inc.
P.O. Box 4920T
251 Gay St.
Manchester, New Hampshire

DCC, Inc.
730 North Rte. 130
Bldg. 5
Pennsaiken, New Jersey 08110
Phone (609) 662-7272 ext. 304

Delco Electronics
Division of General Motors
2401 Columbus Ave.
Anderson, Indiana 46011
Phone (317) 646-7821

Dempster, Inc.
P.O. Box 848
Beatrice, Nebraska 68310
Phone (402) 223-4026

Dongan Electric Mfg. Co.
2997 Franklin St.
Detroit, Michigan 48207
Phone (313) 567-8500

Dresser Ind. - Foote Jones G
5323 S. Western Blvd.
Chicago, Illinois 60609
Phone (312) 471-3040
Telex 284-350

Durakool, Inc.
1080 Main St.
Eklhart, Indiana 46514
Phone (219) 264-1116

Dytek Laboratories, Inc.
Airport International Plaza
40 Orville Dr.
Bohemia, New York 11716
Phone (516) 567-8500

Earth Energy Systems, Inc.
250 Prairie Center Dr.
Eden Prairie, Minnesota 553
Phone (612) 830-7200
Telex 29-0753 EESI EP

Eaton Corporation
Industrial Automation System
9475 Center Rd.
Fenton, Michigan 48430
Phone (313) 629-5361

Electrical Equipment, Inc.
Dept. TR
P.O. Box 9929
Birmingham, Alabama

Electrical Industries, Inc.
2311 Tchoupitouias
New Orleans, Louisiana

Electric Control Equipment
P.O. Box 878
3 Muller St.
Norwalk, Connecticut 06852
Phone (203) 848-1651

Elliot Industries, Inc.
1509-T Hamilton Rd.
Bossier City, Louisiana

Globe Battery
5757 N. Green Bay Ave.
Milwaukee, Wisconsin 53209
Phone (414) 228-1200
Telex 26650

Heliotrope General
3733 Kenora Dr.
Spring Valley, California 92077
Phone (619) 460-3930

Hermann Rotor Company
208 La Salle St., Suite 1283
Chicago, Illinois 60604
Phone (312) 346-5033

H.K. Porter Co., Inc.
Electrical Division
100 Mayflower Dr.
Lynchburg, Virginia 24506
Phone (804) 845-0921

Hummingbird Windpower Corp.
12306 Rip Van Winkle
Houston, Texas
Phone (713) 444-5000
Telex 792662

International Dynergy, Inc.
777 E. Tahquitz-McCallum Way
Suite 233
Palm Springs, California 92262
Phone (619) 322-0400
Telex 881743

International Turbine Manufacturing
6591 Sierra Way
Dublin, California 94568
Phone (415) 833-0400

ISTA Energy Systems Corporation
407 Hope Ave.
P.O. Box 618
Roselle, New Jersey 07203
Phone (201) 241-8880
TWX 7109965818

J. Phillip Industries, Inc.
5707-T Northwest Hwy
Chicago, Illinois

Kalglo Electronics Co., Inc.
6584 Ruch Rd.
Dept. TR
Bethlehem, Pennsylvania 18017
Phone (215) 837-0700

Kearney Div.
Kearney International, Inc.
Dept. CK
P.O. Box 49167
Atlanta, Georgia 30359
Phone (404) 939-6011

KW Control Systems, Inc.
South Plank Rd.
Middletown, New York 10940
Phone (914) 355-6741
Telex 6711599

Lake Shore Electric Corp.
209 Willis St.
Bedford, Ohio

Lakestate Systems, Inc.
Box 181
Kennedy, Minnesota 56733
Phone (218) 674-4105

L.B. Foster Co.
3169 Holcomb Bridge Rd. #210
P.O. Box 47367
Doravillae, Georgia 30136
Phone (404) 448-4211
Telex 810-766-1378

Lea Dynatech Inc.
12516-T Lakeland Rd.
Sante Fe Springs, California 90670
Phone (213) 974-0916

Leonard Ward Electric Co, Inc.
31 South St.
Mount Vernon, New York

Line Electric Products
Division of General Electro Component Inc.
P.O. Box 327-1
Hartford, Connecticut

Logicomp Electronics, Inc.
895 Mamaroneck Ave.
Mamaroneck, New York

Mack Electric Devices
1 North Ave.
Wyncote, Pennsylvania

Magnecraft Electric Co.
5579 N. Lynch Ave.
Chicago, Illinois

Magnetics Power Control Div.
A Division of Spang and Co.
Magetics Bldg.
Sandy Lake, Pennsylvania
Phone (412) 376-7515

Marelco Power System
P.O. Box 440A
Howell, Michigan 48843
Phone (517) 546-6330

Matra Electric
17715-T Susana Rd.
Compton, California 90224
Phone (213) 537-4690

McGraw Edison Company
Power Systems Div.
P.O. Box 2850
Pittsburgh, Pennsylvania 15230

Mercury Switches, Inc.
52708-T Winding Waters Ln.
Elkhart, Indiana

MGM Transformer Co.
5665-A Smithway St.
City of Commerce, California 90040
Phone (213) 726-0888

Micon Wind Turbines Inc.
9595 Wilshire Blvd.
Beverly Hills, California 90550
Phone (213) 273-0993

Motorola Communications and
Electronics, Inc.
1301 E. Algonquin Rd.
Schuamburg, Illinois 60196
Phone (312) 397-1000

National Industrial Transformers
2520 58th St.
Hampton, Virginia 23661

Natural Power, Inc.
New Boston, New Hampshire 03030
Phone (603) 487-5512
Telex 845223

Niagara Transformer Corp.
1751 Dale Rd.
Buffalo, New York 14225
(716) 896-6500

NIFE, Inc.
George Washington Highway
P.O. Box 100
Lincoln, Rhode Island 02865
Phone (401) 333-1179

North Wind Power Company
Box 556
Moretown, Vermont 05660
Phone (802) 496-2955
Telex 957034

Nova Electric Manufacturing Co., Inc.
263 Hillside Ave.
Nutley, New Jersey 07110
Phone (201) 661-3434

Ohio Transformer Corp.
P.O. Box 191-T1
Louisville, Ohio 44641
Phone (216) 875-3333

Otech Engineering
1832 Tribute Rd. #G
Sacramento, California 95815
Phone (916) 927-1820

Pilgrim Electric Co.
Division of Creek Electronics, Inc.
105 Newton Rd.
Plainview, New York 11803

Polyphaser Corporation
1420-T Industrial Way
Gardnerville, Nevada 89410
Phone (702) 782-2511

Power Systems Analysis, Inc.
Dept. 10
2419 10th St. S.W.
Canton, Ohio 44710
Phone (216) 456-8986

Power Systems Association
P.O. Box 7044
Los Angeles, California

Q-Com, Inc.
2050 South Grand Ave.
Santa Ana, California 92705
Phone (714) 540-6123

Rectifier Engineering & Supply Co., Inc.
434 S. Gore Ave.
St. Louis, Missouri 63119
Phone (314) 968-0303

Relays, Inc.
160 W. 83rd St.
New York, New York

R-K Electric Co., Inc.
11315-T Williamson Rd.
Cincinnati, Ohio

RKS Industries, Inc.
Dept. TR
4865 Scotts Valley Dr.
Scotts Valley, California

Rohn
6718 West Park Rd.
P.O. Box 2000
Peoria, Illinois 61656
Phone (309) 697-4400
TWX 9106520646

Santa Rosa Machined Props, Inc.
127 Airport Blvd.
Santa Rosa, California 95401
Phone (707) 545-1108

Sasser Electric Inc.
P.O. Box 353-T
Pearisburg, Virginia 24134
Phone (703) 921-4484

Satin American Corp.
40-A Oliver Terr.
P.O. Box 619
Shelton, Connecticut 06484
Phone (203) 929-6363

S&C Electric Company
6621 N. Ridge Blvd.
Chicago, Illinois 60626
Phone (312) 338-1000

Second Wind, Inc.
7 Davis Square
Somerville, Massachusetts 02144
Phone (617) 776-8520

Siemens/Bioxcom
1401 W. Dundee Rd. Suite 2087
Buffalo Grove, Illinois 60089

Sola Electric
A Unit of General Signal
1717 Busse Rd.
Elk Grove Village, Illinois 60007
Phone (800) 243-8160

Southern Consolidated Corp.
P.O. Box 2047C
St. Petersburg, Florida

Stork Hengelo B.V.
P.O. Box 3386
Princeton, New Jersey 08542
Phone (609) 924-7865
Telex 837693

Supperior Electric Co.
383-T Middle St.
Bristol, Connecticut 06010
Phone (203) 582-9561

Surrette Storage Battery Co., Inc.
P.O. Box 3027
Salem, Massachusetts 01970

SMX Corp.
17914 E. Warren Ave.
Detroit, Michigan 48224
Phone (313) 881-5510

Teledyne Relays
12525 Dephna Ave.
Hawthorne, California

Teslaco
490 South Rosemead Blvd.
Suite 6
Pasadena, California 91107
Phone (213) 795-1699

Tideland Signal Corporation
4310 Director's Row
P.O. Box 52430
Houston, Texas 77052
Phone (713) 681-6101
Telex 762 327 or 762 356

Triac Electric Systems, Inc.
87-27 Myrtle Ave.
Glendale, New York

Tri-Mag, Inc.
P.O. Drawer 4079
Visalia, California 93278
Phone (209) 651-2222

Trip Lite
500 No. Orleans
Chicago, Illinois 60610
Phone (312) 329-1777

TRW Inc.
Capacitor Division
301-TW. O St.
Ogallala, Nebraska

U.S. Windpower
500 Sansome Ct. #600
San Francisco, California 94111
Phone (415) 455-6012

Valley Pump Group
Commerce & Exchange St.
Conway, Arkansas 72032
Phone (501) 329-9811

Valmont Industries
Fontana, California 92335
Valley, NE 68064

Vanguard Relay Corp.
225 Cortland St.
Lindenhurst, New York

Vawtpower Inc.
134 Rio Rancho Dr.
Rio Rancho, New Mexico 87124
Phone (505) 892-9463

Vibo Transformers, Inc.
P.O. Box 1114-T
Dallas, Texas 75221
Phone (214) 720-0190

Warrick Controls, Inc.
1960 W. Eleven Mile Rd.
Berkeley, Michigan 48072
Phone (313) 545-2512

Weaver Electric
6951-T N. Washington
P.O. Box 29220
Denver, Colorado 80229
Phone (800) 257-0038

Westinghouse Electric Corp.
Distribution Equipment Div.
1945 Craig Rd.
St. Louis, Missouri 63141
Phone (314) 776-0300

WhirlWind Power Company
207 1/2 East Superior St.
Duluth, Minnesota 55802
Phone (218) 722-1492
Telex 910 561 0052

Wilmer Electronics, Inc.
2430-T Amsler St.
Torrance, California

Winco
7850 Metro Parkway
Minneapolis, Minnesota 55420-1985
Phone (612) 853-8400
Telex 2907543

Wind Baron Corporation
3702 West Lower Buckeye Rd.
Phoenix, Arizona 85009
Phone (602) 269-6900
Telex 6835005

Wind-Power Inc.
14655 NW Freeway #123
Houston, Texas 77040
Phone (713) 462-1832

Wind Power Systems, Inc.
9270 Cabot Dr.
San Diego, California 92126
Phone (619) 566-1806
Telex 383187

WindTech
P.O. Box 837
Glastonbury, Connecticut 06003
Phone (203) 659-3786

Wind Technologies
1190 Brooks Ave.
Rochester, New York 14624
Phone (716) 235-8500

Windworks, Inc.
Box 44A, Route 3
Muchwonago, Wisconsin 53149
Phone (414) 363-4088

Winpower Wind Systems, Inc.
Newton, Iowa
Phone (515) 792-1301

W.W. Grainger, Inc.
5959 W. Howard St.
Dept. TR
Chicago, Illinois