PN-AAV-016 45198.

COGENERATION IN DEVELOPING COUNTRIES: PROSPECTS AND PROBLEMS

Prepared for:

Office of Energy
Bureau for Science and Technology
U.S. Agency for International Development

Prepared by:

Hagler, Bailly & Company
Washington, DC

HBC Reference No. 85-151

May 5, 1986

Contents

	PAGE	TITLE
SUMMARY		
CHAPTER 1	1.1	INTRODUCTION
CHAPTER 2	2.1	WHAT IS COGENERATION?
CHAPTER 3	3.1	WHY COGENERATION?
CHAPTER 4	4.1	WHO IS DOING WHAT?
	4.1	International Aid and Development Agencies
	4.3	American Vendors and Manufacturers of Cogeneration Equipment
CHAPTER 5	5.1	WHAT IS THE COGENERATION POTENTIAL IN DEVELOPING COUNTRIES?
CHAPTER 6	6.1	WHAT ARE THE MAJOR ISSUES OF COGENERATION DEVELOPMENT?
	6.1	Technical Issues
	6.2	Economic and Financial Issues
	6.5	Regulatory and Institutional Issues
CHAPTER 7	7.1	WHAT SHOULD AID DO?
	7.1	Policy Dialogue
	7.2	Research, Development, and Demonstration

	PAGE	TITLE
	7.3	Training and Technical Assistance to Missions
	7.4	Information Dissemination
APPENDIX A		COGENERATION: TECHNICAL CONCEPTS
APPENDIX B		ECONOMICS OF COGENERATION
APPENDIX C		ELECTRICITY COST CALCULATIONS FOR SMALL MODULAR COGENERATION SYSTEMS

Exhibits

Exhibit 4.1	List of Cogeneration Manufacturers Interviewed
Exhibit 5.1	List of AID-Assisted Countries
Exhibit 5.2	Energy Consumption and Cogeneration Potential in Selected Developing Countries
Exhibit 5.3	Energy Consumption, Power Supply Capacity, and Industrial Cogeneration Potential in Seven Developing Countries
Exhibit 6.1	Electricity Cost as a Function of Fuel Price for Selected Modular Cogeneration Systems
Exhibit A.1	Conventional Electrical and Process Steam Systems Compared to a Cogeneration System
Exhibit A.2	Topping and Bottoming Cycle Cogeneration Systems
Exhibit A.3	Steam-Turbine Topping System
Exhibit A.4	Gas-Turbine Topping System
Exhibit A.5	Diesel-Engineer Topping System (Process-Steam Configuration)
Exhibit A.6	Combined-Cycle Topping System
Exhibit A.7	Rankine Bottoming System
Exhibit B.1	Example of Steam Load Duration Curve
Exhibit C.1	Product Guide: Small Cogeneration Systems

This paper analyzes the prospects and problems of cogeneration as an alternative power supply and energy conservation scheme in developing countries. The paper estimates the cogeneration potential, in selected AID countries; reviews the involvement of international development agencies and American manufacturers in cogeneration projects; and identifies the technical, economic/financial, and institutional issues of importance to cogeneration development in developing countries. The paper also identifies the role of AID in promoting cogeneration in LDC's.

The analysis reveals that although cogeneration alone will not resolve the power shortage problems, it could produce more than a 10 percent increase in the electricity generation capacity in developing countries. Most of this potential is in the industrial sector and can be economically developed. However, cogeneration development efforts by these countries, as well as by international development agencies, are very limited and insufficient. The study shows that although technical and economic issues have major a impact on cogeneration development in a country, it is the resolution of institutional barriers that will determine the pace of such development. In this regard, AID could play an important role by disseminating information on cogeneration, demonstrating feasibility of selective projects, assisting the development of institutional reforms to remove barriers to cogeneration, and providing the interface between manufacturers and potential cogenerators. AID could also help countries to establish financial mechanisms to channel available funds from international development agencies to cogeneration.

1 INTRODUCTION

Electric power is a crucial form of energy in countries around the globe. In 1982, approximately 1360 terawatt-hours* of electricity were generated in developing countries, as compared to approximately 2,240 terawatt-hours generated in the United States. Demand for electric power is on the rise in developing countries, which are expected to experience an annual growth rate in power consumption of more than 7 percent over the next two decades. In contrast, an annual growth rate of 2 percent is projected for the United States.

To date, public utilities have dominated the production, transmission, and distribution of electric power, and they have tended to emphasize large-scale centralized power facilities because of the expected economies of scale. In many developing countries, however, this trend has created severe financial, technical, and managerial difficulties for many utilities. Unable to expand quickly enough to meet demand, utilities are often forced to schedule daily load sheddings. In Pakistan, for example, summer peak demand exceeds peak supply by over 20%, resulting in daily blackouts in parts of the grid. Supply disturbances, both blackouts and brownouts, cause economic losses beyond the actual electricity cost of the unsupplied demand. For example, machinery and manpower idled during a blackout results in production losses. Although precise measurement of such impacts is not possible, some studies have estimated the economic loss at several times the value of the unsupplied demand.**

Faced with the problem of power shortages, developing countries are trying to develop schemes that allow them to better utilize their available power supply capacity, and to expand their capacity. Although all

---

*1 terawatt-hour = 10^6 megawatt-hour

**For example, the industrial productivity loss due to power shortages in Brazil, in 1977, was estimated at over $1/kWh while electricity prices were under 4¢/kwh.

countries continue to view large thermal or hydroelectric plants as the primary long-term solution to power shortages, they are also pursuing other alternatives. In some countries -- Bangladesh and Yemen -- utilities use small gas turbines, which have a short construction time, to relieve immediate power shortages. Other countries are trying to discourage demand through sharp price increases. This option, however, is often politically unacceptable. Many countries are also trying to reduce the transmission and distribution losses in their systems. These losses, representing technical inefficiencies as well as theft, often account for over 25% of generation.* Load management -- reducing the peak load by distributing it across the off-peak period -- is another option being considered by electric utilities in some countries.

A more recent option relies on the development of nonutility small-scale power generation. This option includes the simultaneous generation of electricity and thermal energy (cogeneration), and nonutility power supply opportunities such as small hydroelectric installations, direct and dispersed solar power generators, wind machines, and equipment that uses agricultural by-products, including bagasse, for power generation.

Since cogneration provides an opportunity for conserving energy, as well as expanding power supply capacity in developing countries, it is an important consideration of the Energy Conservation Services Program (ECSP). In this paper, we examine the prospects and problems of cogeneration in developing countries. We estimate the cogeneration potential and discuss the economic, technical, and institutional factors that determine the decision of a government, a firm, or a foreign manufacturer to get involved in cogeneration. We also identify public policy initiatives that can encourage the application of cogeneration technologies as means of economic efficiency. Finally, we discuss the role of AID in

---

*For example, in 1982, the distribution and transmission losses in India were 26%, in Egypt 22%, and in Pakistan 30%. For other countries see World Bank, 1982 Power Data Sheets for 104 Developing Countries, 1985.

promoting private sector involvement in cogeneration development as a way to expand power supply and improve fuel efficiency in developing countries.

2 WHAT IS COGENERATION?

Cogeneration is a new name for an old and proven practice. In broadest terms, it denotes any form of the simultaneous production of electricity or mechanical energy and useful thermal energy (usually in the form of hot liquids or gases).

In a central station thermal power plant, fuel is burned to produce high-temperature, high-pressure steam that is then passed through a turbine to generate electricity. Even in the most efficient thermal steam power plants, less than 40% of the available energy contained in the fuel is converted into electricity. More than 60% of the energy in the fuel escapes to the atmosphere. Some of this thermal discharge is accounted for by combustion gases that escape to the atmosphere through the boiler stack. But most of the waste heat is accounted for by the condensation and cooling of steam and water after they have passed through the turbine. The turbine discharge contains substantial amounts of useful heat, but this heat is at temperatures and pressures that are too low to economically generate additional electricity. Most commercial and industrial applications, however, require process steam and heat at low temperatures. Therefore, combining production of electricity and heat in an industrial plant or a commercial site can use the otherwise wasted energy.

The following example indicates the nature of the energy savings associated with cogeneration. Generating 8500 pounds of steam and 600 kWh of electricity separately requires 3.25 barrels of oil. Generating them together requires only 2.75 barrels of oil for an overall energy savings of 15 percent. Alternatively, to generate electricity separately requires 10,500 Btu per kWh. When electricity is generated in conjunction with process steam, the net heat rate is 5,250 BTU per kWh. A more detailed description of cogeneration is provided in Appendix A.

Cogenerators come in all sizes. Some are very small, under 100-Kilowatt, and are ideal for small hotels or

commercial buildings. Intermediate units of 10 to 50 megawatts, will fill the steam and electricity needs of an oil refinery, a petrochemical plant, or a pulp and paper mill. Large plants of up to 400 megawatts, which might generate enough power to meet the needs of small cities in developing countries, are usually built expressly for selling most of their power to a utility.

3 WHY COGENERATION?

The recent interest in cogeneration for developing countries is motivated by the sizable national energy savings which could be achieved if heat for industrial and commercial uses were produced jointly with electricity rather than separately, as is generally the current practice. In addition, cogeneration of process steam, heat, and electricity is an economical choice that will reduce the cost of electricity to all consumers over time. Furthermore, if all economic cogeneration opportunities in a country are exploited, a large fraction of the nation's demand for electricity can be supplied by decentralized cogeneration facilities, substantially reducing the need for utilities to invest in new generating capacity resulting in considerable capital and foreign exchange savings. At a time when the electric utilities in developing countries are having great financial, technical, and institutional difficulties in expanding their capacity this appears to be an attractive opportunity indeed.

In addition, congeneration reliance on a large number of relatively small generators could reduce the probability that large portions of the power system will fail simultaneously. Consequently, it could reduce the amount of "spinning reserves" and reserve margins needed for the utility system.

Since a cogeneration facility can be brought on line in relatively short time compared with typical lead times for central station generating plants, reliance on cogeneration could increase a nation's flexibility to respond to unexpected changes in demand and can reduce reliance on historically unreliable long range demand forecasts. In addition, cogeneration can be a way of substituting electric utilities' imported oil consumption with domestically available alternative fuels, reducing the economic burden of importing energy. Finally, the entry of small cogeneration facilities into the electric power system represents

the first step on the road to fundamental changes in the structure of the electric power industry that will allow for more reliance on competitive market forces and private sector initiatives and less reliance on monopolies and government involvement.

The interest in cogeneration for LDCs has been stimulated, in part, by the successful development of such facilities in the United States since the passage of the Public Utility Regulatory Policies Act of 1978 (PURPA). PURPA includes several provisions designed to encourage the production of electric power from cogeneration units and other small power production facilities owned by firms that are not electric utilities. The success of these provisions is indicated by the fact that between 1980 and 1984, 14,000 megawatts of generating capacity were registered with the Federal Energy Regulatory Commission (FERC) in the United States.* In 1984, cogeneration accounted for almost 160-billion kWh of electric energy production in the United States or roughly 7 percent of the nation's power supply.

If large increases in cogeneration are economical why do we see so little of it occuring in developing countries? Furthermore, if such opportunities are to be utilized, how should various sectors (e.g. the private sector and the government) in a developing country get involved. Finally, what should be the role of AID, if any, in helping this process?

*Not all registered projects are completed.

4 WHO IS DOING WHAT?

To evaluate the involvement of the concerned parties in cogeneration, we reviewed the activities of three international organizations involved in energy and development and a number of vendors of cogeneration equipment in the United States.

This review also enabled us to gauge developing country involvement in cogeneration efforts, as most efforts are either initiated by one of the international organizations or involve them at some stage.

International Aid and Development Agencies

We contacted three international organizations about cogeneration activities: the World Bank, the United Nations, and the InterAmerican Development Bank.

The World Bank (Bank) seems to be more directly involved in cogeneration than the other two organizations. The Bank's Industry and Energy Departments are charged with developing a strategy on cogeneration. The Bank's main concern is in difficulties associated with institutional arrangements for cogeneration in developing countries. Development of institutional reforms to facilitate the interaction between cogenerators and utilities in a developing country is not considered a Bank role, and as long as such reforms are not in place, financial involvement will be impossible. Furthermore, there is no clear indication of which department in the Bank, industry or energy, should be responsible for cogeneration projects. In fact, cogeneration projects tend to fall into both departments' domain.

Most of the Bank's activities to date have been limited to the energy assessment studies carried out for some 40 countries; in these studies, carried out jointly with the United Nations Development Program (UNDP), cogeneration was treated as a component of overall conservation efforts. The Bank has also funded a study on cogeneration and the use of bagasse in the sugar

industry of developing countries.* We were not able to identify any Bank project that solely supported a cogeneration project. We were told, however, that cogeneration projects have been components of larger loans. One of the issues is that the Bank provides funds only to the government of a country and not private-sector enterprises. In the case of cogeneration most activities are likely to be conducted in the private sector and presently there are no easy mechanisms available to the Bank to channel the required funds or assistance to it.

Cogeneration activities in the InterAmerican Development Bank (IDB) is also very limited, although the staff seem to have a keen awareness of the importance and potential of cogeneration in American developing countries. Most of the activities in this field fall under the jurisdiction of the non-conventional energy section. This section has been especially active in promoting the cogeneration of heat and electricity in the sugar industry in Central America. The IDB considered financing a cogeneration project in the Dominican Republic until the government postponed the project because of other economic priorities. The non-conventional energy section is also in the process of identifying a similar sugar plant cogeneration project in Colombia. Some preliminary analysis has been conducted, and the IDB is waiting for an expression of interest from the Colombian government.

The United Nations (UN) supports cogeneration as an attractive energy use and conservation measure. However, the UN is not pursuing any specific policy on this regard.

In short, although these organizations have the interest and financial resources to support cogeneration projects, they have not yet been involved in any such efforts. What is needed, we believe, is the development of institutional frameworks in developing countries enabling potential cogenerators to gain access to financial, technical, and other resources that such organizations can provide. As long

*World Bank, Energy Paper No. 13, Identifying the Basic Conditions for Economic Generation of Public Electricity from Surplus Bagasse in Sugar Mills, 1983.

as there is no direct request for specific assistance from a country, the aid agencies and, especially, development banks will not be able to make effective contributions.

American Vendors and Manufacturers of Cogeneration Equipment

Many U.S. manufacturers and businesses are involved in various cogeneration efforts. A review of the Industrial Cogeneration Manual* shows that over 60 U.S. companies are involved in manufacturing cogeneration equipment such as combustion turbines, diesel engines, gas engines, rotary engines, steam turbines, and boilers. Except for pre-packaged cogeneration systems, the cogeneration equipment consists of regular thermal and turbomachinery used for heat and power generation. It is only the sequential combination of the machines used in a cogeneration system that differs.

We divided cogeneration manufacturers into two categories: (1) those with modular or packaged systems with small capacity -- under 500kW -- and (2) those that manufacture conventional thermal-electric machinery with cogeneration applications. In contacting selected companies in each category (listed in Exhibit 4.1), we sought to determine whether they had conducted cogeneration business in developing countries and if so, where and when. We also asked company representatives to give their opinion of the major problems facing the expansion of their cogeneration-related business in developing countries.

Modular cogeneration systems with a capacity up to 500 kW are best suited for commercial, small industrial, and institutional applications. These systems cost between $700/kWe and $1,500/kWe. They also tend to be more sophisticated than the larger conventional equipment with cogeneration applications, with some electronic and microcomputer components. A well trained operation and maintenance crew is thus required.

---

*For detailed description of each firm and its products see the Industrial Cogeneration Manual, published jointly by the Regulatory Policy Institute and Cogeneration and Small Power Monthly, 1983.

Exhibit 4.1

List of Cogeneration Manufacturers Interviewed

A. Manufacturers of Modular Cogeneration Systems

• Cogenic Energy Systems, Inc.	New York, NY
• Intellicon, Inc.	San Diego, CA
• Martin Cogeneration Systems	Topeka, KN
• Onan Corporation	Minneapolis, MN
• Re Energy Systems	Media, PA
• ThermoElectron	Waltham, MA

B. Manufacturers of Conventional Cogeneration Equipment

• Alpha Systems	El Seguendo, CA
• General Electric	Schenectedy, NY
• North American Turbine Corporation	Houston, TX
• ThermoElectron	Waltham, MA
• United Technologies	Farmington, CT
• Westinghouse	Pittsburgh, PA

In general , most companies in this category only operate in the United States, although some have had limited sales in developing countries. For example, Cogenic Energy Systems, Inc. has sold three plants overseas:

- A 450 kW cogeneration unit for a Westin Hotel in Seoul, Korea
- Two 450 kW units for a Johnson and Johnson Plant in Puerto Rico
- Four 500 kW units for Rose Hall Hotel in Montego Bay, Jamaica.

Cogenic Energy Systems was also approached by a Pakistani firm interested in representing it in Pakistan. Although this company offers its customers in the United States alternative financing schemes such as third-party financing or shared saving, its international business has only entailed direct sales to site owners. In the case of the plant in Jamaica, however, the government owns part of the resort area, and was involved in the procurement.

Most companies in this category provide maintenance services to their clients in the United States but find it difficult to provide such services overseas. They are, however, willing to extend their resources to developing countries directly or through local firms if the size of the market makes such investments justifiable.

In the second category -- manufacturers of conventional thermal-electric equipment with cogeneration applications -- in all, we contacted six companies, including General Elecrtric, North American Turbine Corporation, Thermo Electron, and Westinghouse. These larger companies have sold cogeneration equipment to developing countries, among them, India, China, Brazil, Korea, Pakistan, the Philippines, Taiwan, Argentina, and Chile. Thermo Electron, for instance, sold a system with an electric capacity of 3.8 MW to a Philippine copper mining company in 1980.

Our discussions with the manufacturers, confirmed our opinion that many large industries in developing countries are aware of the cogeneration potential and have no problems with operating such systems. Some developing countries, such as India, probably have the

ability to manufacture their own cogeneration equipment. Almost all the manufacturers we talked to, however, had problems competing with foreign firms because of the more favorable terms of financing available to the latter. In one case, General Electric is trying to get financing from the Export-Import Bank and AID to sell a cogeneration plant to India.

Considering that the U.S. cogeneration market, facing a glut of electric power, has reached its peak and is saturating, we believe that the market in developing countries could provide a timely opportunity for U.S. manufacturers to expand their sales. The size of the market, availability of financial aid, provisions for technical assistance, and development of indigenous operation and maintenance capabilities are the major elements that will characterize the opportunities for U.S. manufacturers.

5 WHAT IS THE COGENERATION POTENTIAL IN DEVELOPING COUNTRIES?

Most of a country's cogeneration potential is in its commercial and industrial sectors. Key factors that determine the potential are the types of industries and processes in use, the heat, ventilation, air conditioning (HVAC), and electricity loads, and economic factors such as fuel and electricity prices, and cogeneration equipment costs.

The industrial sector in most developing countries is the largest consumer of commerical energy and electricity. In 1980, total commercial primary energy consumption for all 104 developing countries was estimated at 1,350 million tons of oil equivalent (mtoe),* of which 600 mtoe -- or approximately 45 percent -- was used by the industrial sector.** In contrast, the U.S. industry consumed about 635 mtoe energy in 1983. Electricity consumption by the industrial sector in these countries was roughly the same proportion of total consumption. In India, for example, 55.8 percent of electricity generated by the utilities is sold to industry, in Pakistan 37 percent, in the Philippines 41 percent, in Turkey 45 percent, and in Indonesia 33 percent.***

---

*World Bank, The Energy Transition in Developing Countries, 1983, p. 3.

**World Bank, Industrial Energy Efficiency in Developing Countries, 1984, p. 4. This estimate is based on the survey of energy comsumption in the industry sector of some 30 countries. The results were extrapolated for the remaining countries.

***World Bank, 1982 Power Data Sheets for 104 Developing Countries, 1985

A comprehensive cogeneration market study by Hagler, Bailly & Co.* estimates the industrial cogeneration potential in the U.S. industrial sector (between 1984-1995) at 21 and 29 GWe.** This estimate is based on the survey and analysis of food, pulp and paper, chemicals, petroleum refining, and steel industries. These industries are the most energy intensive, consuming over 60 percent of the energy used in the industrial sector. The study considered only steam topping-cycle cogeneration, in which steam is the required form of thermal energy for industrial process, because these applications are expected to account for the greatest portion of future cogeneration development. The long-term technical cogeneration potential in the industrial sector, however, could be as high as 60 GWe.

As a first approximation, we may assume that the ratio of cogeneration potential to the total energy consumption of the industrial sector in developing countries is the same as in the United States. Of course the industry mix and the energy intensity in the United States is very different from those of the developing countries. Nevertheless, this will give a rough indication of the potential. Following this approach, we estimate the industrial cogeneration potential in developing countries to be between 20 GWe to 27 GWe.

To test this approach we used an available data point for the Philippines. A study for the Asian Development Bank estimates the potential for industrial cogeneration in the Philippines at 2,700 GWh/year, representing a generating capacity on the order of 350 to 450 MW.*** This estimate is based on the energy audits of 70 plants. Total energy consumption in Philippine industry is estimated at 7.3 mtoe. Given the U.S. ratio of cogeneration potential to total industrial energy

---

*Hagler, Bailly & Company, 1984, U.S. Industrial Cogeneration: Market Prospects to 1995 for Process Steam and Electricity Cogeneration Systems, 1984.

**About 11,000 MW of this industrial cogeneration potential is already utilized.

***This is based on a thermal to electric ratio of 6:1. For more detail see: Arthur D. Little, et al. Industrial Energy Audits and Conservation Program for the Philippines, 1983.

consumption ratio we estimate a cogeneration potential of about 280 to 350 MW in the Philippines.

Extrapolating from these ratios, we estimated the industrial cogeneration potential in the developing countries of interest to AID (see Exhibit 5.1) at 6 GWe to 10 GWe. About half of this potential is in seven countries -- Egypt, India, Indonesia, Pakistan, Philippines, Thailand, and Turkey -- and represents about 5 to 7 percent of the present power supply capacity. However, actual electricity production from cogeneration plants can account for a greater fraction of overall power production in a country, because the capacity factor of industry is usually over 80 percent, while that of a thermal power plant is between 60 percent and 70 percent.

We next sought to estimate the cogeneration potential in these seven countries more accurately. To do this, we used our own experience and other U.S. studies to determine the energy consumption in the five industrial categories with the highest cogeneration potential -- food, pulp and paper, chemicals, petroleum refining, and steel. We assumed that the ratio of cogeneration potential to energy consumption for each group in each developing country is the same as the U.S. ratio. For these five industries, our estimates of the potential varies from roughly 60 MW in Thailand to 1000 MW in India* (see Exhibit 5.2). Expressed as a percentage of existing installed electric capacity, the industrial cogeneration potential varies from 5 percent in the Philippines to 16 percent in Indonesia (see Exhibit 5.3).

These estimates are based only on load following cogeneration potential, where the industrial plant installs a cogenerator to match its thermal or electric load. If financially beneficial, the plant could generate more electricity than it needs and sell the excess. In such a case the plant operates in a "utility" mode.

---

*The estimated cogeneration potential in India and Thailand does not include that of the petroleum refining industry.

Exhibit 5.1

List of USAID-Assisted Countries

Bangladesh
Barbados
Belize
Bolivia
Botswana

Bourkina Fasso
Burma
Burundi
Cameroon
Cape Verde

Chad
Colombia
Costa Rica
Djibouti
Dominican Republic

Ecuador
Egypt
El Salvador
Fiji
Gambia

Ghana
Guatemala
Guinea
Guinea-Bissau

Guyana
Haiti
Honduras
India
Indonesia

Jamaica
Jordan
Kenya

Lebanon
Lesotho
Liberia
Malawi
Mali

Mauritania
Morocco
Nepal
Nicaragua
Niger

Oman
Pakistan
Panama
Paraguay
Peru

Philippines
Portugal
Rwanda
Senegal
Sierra Leone

Somalia
Sri Lanka
Sudan
Swaziland
Thailand

Togo
Tunisia
Turkey
Uganda
Yemen Arab Republic

Zaire
Zambia
Zimbabwe

Exhibit 5.3

Energy Consumption, Power Supply Capacity, and Industrial Cogeneration Potential in Seven Developing Countries

Country	Total commercial energy consumption (mtoe)	Power supply capacity (MWe)	Industry's energy consumption (mtoe)	Industrial cogeneration potential (MW)[1]	Cogeneration potential as a fraction of country's electric power production capacity (percent)
Egypt	20.0	3,780	8.0	360[2]	10
India[3]	108.1	38,800	55.8	880-1,100[4]	2-3
Indonesia	24.9	3,510	7.4	500-610	14-17
Pakistan	15.2	4,240	6.1	300-360	7-8
Philippines	11.8	5,010	7.3	260-320	5-6
Thailand	12.9	4,690	6.4	83-102[4]	1.5-2.3
Turkey	27.8	6,300	11.9	530[2]	8.5

[1]Load following mode, i.e., minimum potential.

[2]Estimated using the U.S. overall ratio of cogeneration potential as a fraction of total industrial energy consumption, as no detailed information for industry was available.

[3]The cogeneration potential in India is based on energy consumption data for only a fraction of industrial plants.

[4]Does not include cogeneration potential in petroleum refining.

SOURCE: Hagler, Bailly & Company based on data for: World Bank, Industrial Energy Efficiency in Developing Countries, 1984; United Nations, 1982 Energy Statistics Yearbook.

Exhibit 5.2

Energy Consumption and Cogeneration Potential in Selected Developing Countries[1]

Industry	Egypt	India[2]	Indonesia	Pakistan	Philippines	Thailand	Turkey
Food							
Consumption (10^3 toe)	N/A	34.5	740.7	1,751.0	1,146.0	1085.0	N/A
Cogeneration potential (MW)	N/A	1.0-1.1	21.0-22.5	49.0-53.0	32.0-35.0	29.2-32.2	N/A
Pulp and paper							
Consumption (10^3 toe)	N/A	112.5	161.7	145.4	1,270.0	148.0	N/A
Cogeneration potential (MW)	N/A	218.0-277.0	28.6-36.0	26.0-33.0	224.0-285.0	25.0-32.0	N/A
Chemicals							
Consumption (10^3 toe)	N/A	5,456.4	3,795.0	723.0	0.44	198.0	N/A
Cogeneration potential (MW)	N/A	546-661	379-460	209-254	0.04-0.05	20-25	N/A
Petroleum refining							
Consumption (10^3 toe)	N/A	N/A	1,234.0	204.5	0.58	N/A	N/A
Cogeneration potential (MW)	N/A	N/A	66-80	11-14	--	N/A	N/A
Steel							
Consumption (10^3 toe)	N/A	8,460.0	740.7	403.0	0.33	570.0	N/A
Cogeneration potential (MW)	N/A	119-136	10.4-11.7	6-7	--	9-12	N/A
Total							
Consumption (10^3 toe)	N/A	15,085[3]	6,672	3,227	2,417	764[3]	N/A
Cogeneration potential (MW) (Rounded)	N/A	884-1,075	505-610	300-360	257-320	83-102	N/A

[1]Cogeneration potential estimates are made by assuming the ratio of cogeneration potential to energy consumption for each industry in these countries the same as the ratio in the United States.

[2]The available data on India only covers a fraction of plants in each industry group.

[3]Does not include petroleum refining.

SOURCE: Hagler, Bailly & Company based on data for:
India: World Bank, Industrial Energy Efficiency in Developing Countries, 1984.
Indonesia: Hagler, Bailly & Company; Indonesia, Industrial Energy Conservation, 1985.
Pakistan: Hagler, Bailly & Company, National Energy Conservation Program, Vol. II, Supporting Data and Analysis, 1985.
Philippines: Asian Development Bank, Industrial Energy Audits and Conservation Program for the Philippines, 1983.
Thailand: United Nations, Industrial Development Organization, Energy Saving Schemes, 1982; and the National Energy Administration of Thailand, Thailand Energy Master Plan Project, February 1982.

There is very little information available on the energy consumption patterns in the commercial sector of developing countries. Therefore, it is not possible to estimate the cogeneration potential in this sector. In theory, hotels, schools, hospitals, and other large commercial buildings could have a continuous demand for cooling, heating, or hot water and electricity, making them candidates for cogeneration, especially if they operate more than 4,000 hours per year. However, the energy consumption patterns in such buildings is so much dependent on each country's climate and energy use habits, which are directly linked to the economic status, that it is impossible to generalize.

For the purpose of this study, we assume that the ratio of cogeneration potential in the commercial sector to the potential in the industrial sector in developing countries is similar to the ratio in the United States -- 20 percent*. Although this results in a small potential on the national level in developing countries, since most large hotels and hospitals in developing countries are located in a few large cities, any realization of their cogeneration potential could considerably improve the power supply capacity in those cities.

As a first approximation, however, we project the following industrial and commercial cogeneration potential in our seven selected countries:

*Hagler, Bailly & Co., Projected Copper Use in Cogeneration Systems: 1985-1995, 1985.

	Load Following Mode * (Rounded, MW)	Utility Mode ** (Rounded, MW)
Egypt	450	675-900
India	1,200	1,800-2,400
Indonesia	650	975-1,300
Pakistan	400	600-800
Philippines	380	570-760
Thailand	112	168-224
Turkey	650	975-1,300
Total	3,842	5,763-7,684

Extrapolated to all AID countries, this potential (including utility mode) is likely to be between 7,500 MW and 15,000 MW.

*Twenty percent more than industrial cogeneration potential midpoint from estimates presented in Exhibit 5.3

**Assumed to be 1.5-2.0 times load following mode.

6 WHAT ARE THE MAJOR ISSUES OF COGENERATION DEVELOPMENT?

The decision to develop the cogeneration potential in a country depends on a number of factors. These factors can be grouped into three categories: technical, economic and financial, and institutional. The specific conditions in each country will determine the relative importance of the issues involved.

Technical Issues

The technical issues of a cogeneration project center on identification of the opportunities, system engineering and selection, procurement of necessary equipment, and installation, operation, and maintenance of the system.

Identifying the opportunities for cogeneration -- or the cogeneration potential -- in an industrial plant or commercial building is a straightforward process. In this process, operating parameters, such as process temperature, electricity and heat load, and load factor (hours of operation per year) must be considered. In general, plants with large and continuous low temperature heat loads are ideal candidates for cogeneration. An analysis or energy audit of an industrial plant or a commercial building will usually provide sufficient information to identify the potential and determine the engineering aspects of the optimum cogeneration system. Such analyses can be difficult in developing countries because plant engineers may not be aware of the technical and financial characteristics of cogeneration. As a result, they will seldom consider such options. Moreover, in cases where engineers are familiar with the concept of cogeneration, they may lack the technical know-how or the measurement and control instruments to conduct such analyses.

Once the cogeneration potential has been identified and the optimum system characterized, plant management may have difficulty in selecting and procuring the equipment. In many countries, the required cogeneration

Equipment procurement may be a special problem for plants that have uncommon industrial standards, e.g. those plants made in the Soviet Union or Eastern European countries, as is the case in Pakistan, Sri Lanka, Egypt, and India.

Cogeneration equipment installation can present the same kinds of problems as procurement. In addition, the plants are sometimes so old or obsolete that partial modification of their power and heating components is not justified. In other cases, the plant layout does not allow installation of additional equipment.

Economic and Financial Issues

Why would a firm choose to invest in more expensive boilers and turbine-generator sets, and use additional fuel in its industrial processes or commercial applications to cogenerate electricity and heat? The answer lies in the value of extra supply reliability that the firm achieves, and the value of electricity that the firm produces.

If the economic loss from utility supply disruptions exceeds the cost of adding its own generator, or cogenerator, a firm will undertake the required investment. The electricity produced can replace electric power that the firm would otherwise purchase from the utility. If the firm produces more electricity than it can use itself, the value of the excess electricity depends on the price at which the firm sells the electricity to the utility or other customers (as a practical matter most existing cogenerators produce less electricity than they consume, but this is not a necessary characteristic). If the value of the electricity produced is greater than the incremental costs of producing it (capital, operation, and fuel costs), then it is profitable for the firm to invest in cogeneration capacity. In such cases the firm can reduce the total cost of producing its primary product or service by investing in cogeneration capacity.

The factors that determine the overall financial benefit of a cogeneration investment to a firm include electricity and fuel prices, cost of capital, and the specifications of plants' electric and thermal loads. A review of the economics of cogeneration is provided in Appendix B.

To indicate the economic feasibility of cogeneration in developing countries, as well as the impact of fuel and electricity prices on the relative attractiveness of cogeneration investments, we calculated the cost of electricity from a cogeneration system in a number of countries, including the seven AID countries with the highest industrial cogeneration potential.

We assumed that a hypothetical low-temperature industrial plant in country x purchases a packaged cogeneration system available in the U.S. market, and uses it to supplement existing boilers cogenerating electricity and heat. Using a levelized cost methodology, we calculated the unit cost of electricity generated from four modular cogeneration systems. The electricity cost calculations are based on the cogeneration system manufacturers' installed cost estimates, a 25-year life, and a 10 percent discount rate (capital charge factor of 11 percent), and are shown as a function of the fuel cost. Because operation and maintenace costs are usually a small fraction of the total cost, we did not consider them. Our calculations for the four systems are presented in Appendix C.

We plotted the results of our calculations against electricity and fuel prices available to industry in 11 countries (see Exhibit 6.1). In Egypt, Indonesia, Pakistan, Bangladesh, Thailan, and Korea the electricity generated by cogenerators costs less than the utility prices. In the Philippines, India, and Turkey, depending on what cogeneration system is used, the cost of electricity can be lower or higher than utility rates. In Costa Rica, electricity rates are too low to warrant cogeneration.

Under the above assumptions, the rate of return on a modular cogeneration system investment in Egypt is 52 percent, in Thailand 37 percent, and in Indonesia 35 percent. However, in developing countries, investment decisions are often determined by factors other than financial or economic ones. Our direct experience in developing countries supports this argument. For example, our feasibility study of energy conservation measures in a tire company in Sri Lanka* revealed that installation of new boilers with cogeneration capacity

*Hagler, Bailly & Company, Feasibility study of Sri Lanka Tyre Corporation factory, Final Report, June 1984.

Exhibit 6.1
Electricity Cost as A Function of Fuel Price for Selective Modular Cogeneration Systems

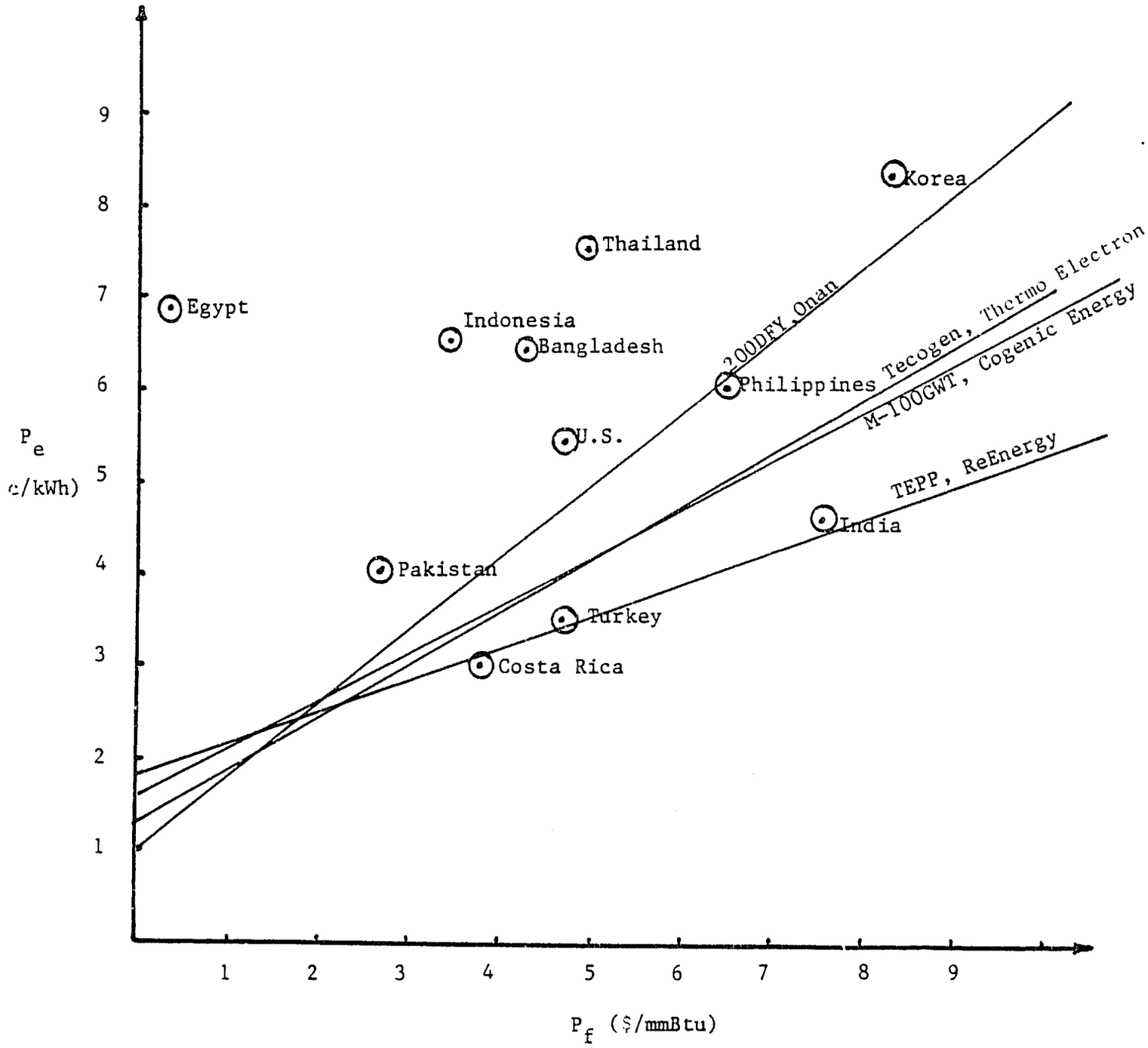

Source: Hagler, Bailly & Company based on data from
World Bank, Domestic Petroleum Prices, 1984
Energy Information Administration, Electric Power Monthly, January 1984
Energy Users News, "Product Guide: Small Cogeneration Systems", Dec. 31, 1984.

World Bank, 1982 Power/Energy Data Sheet for 104 Developing Countries, 1985.

will result in impressive fuel savings and an attractive 53 percent rate of return on the required investment. However, despite the interest of plant managers, the government (which owns the plant) chose to disregard the study and continue operating the old system. Since the study was completed, the plant's energy cost has increased by 40 percent.

Regulatory and Institutional Issues

Considerable regulatory reform and institutional development will be required to provide the economic impetus for cogeneration development. Some of the issues are not unique to cogeneration technology. For example, the problems of "technological inertia" and "social inertia" are common to the introduction of any new technology, including cogeneration. Initially, potential cogenerators, will know little about the technology and its benefits, and will be reluctant to undertake the necessary investments or plant modifications.

Many companies prefer to use their available capital to maintain or expand market share and production output levels. Their reluctance to cogenerate may also stem from a lack of trained manpower to evaluate the potential or operate the cogeneration equipment. In such an environment, providing and disseminating the necessary information and insuring the availability of technical manpower constitute a major part of the institutional development process.

There are problems that are unique to cogeneration, however. One is the interaction between electric utilities and cogenerators. Cogenerators may need electric utilities to buy their excess generation, to provide them with back-up power, or to use the distribution network for selling their cogenerated electricity to other consumers. In many developing countries only utilities are allowed to generate and sell electricity, effectively excluding cogenerators from the market. In some instances, governments, through electric utilities, have invested in large hydroelectric plants and find themselves with excess capacity. It is thus not in their interest to allow cogeneration.

In some countries the industry sector pays relatively higher rates than residential, commerical, and agricultural electricity users. Therefore, electric

utilities are reluctant to allow cogeneration by industry because of the fear of losing their profitable customers, which could cause their financial situation to deteriorate.

The need for regulations that define terms of interaction between electric utilities and cogenerators, are often mentioned as prerequisite for cogeneration development. The sudden growth of cogeneration capacity in the US is thought to owe much to the active role that the goverment took in establishing legal procedures for utility-small producer interactions. The main thrust of PURPA was its requirement that utilities buy back electricity from cogenerators at prices representing their own marginal production cost, and provide cogenerators access, at a fair price, to the transmission and distribution networks.

However, there are major differences between utilities in the U.S. and in developing countries. In the U.S., for example, electric utilities generate over 95 percent of the power and their grid covers the entire country. In developing countries some 15 percent of electricity is generated by small non-utility producers that have no access to the grid, but rather serve their immediate area.* Furthermore, the reliability of supply, whether from utilities or small producers, is not as high as in the United States. As a result, many large power consumers either generate their own electricity or have backup generators. Thus there is unlikely to be as much interaction between utilities and small cogenerators as there is in the U.S.

Another major difference between the U.S. and developing countries is that in the latter, large industries with considerable cogeneration potential are often owned and operated by the government. Interaction between the utility and the industrial facility is not necessarily based on regular supplier-customer relations; rather, alternative regulatory or institutional arrangements are required. Fair "buyback" rates alone would have little impact.

---

*For example, in Pakistan 17% of electricity generation is by non-utility suppliers, in Phillipines 16%. For other countries see World Bank, 1982 Power Data Sheets for 104 Developing Countries, 1985.

In cases where a cogenerator will need to rely on an electric utility to sell its excess power or provide back-up power during system failure and maintenance, the terms of interactor between the utility and cogenerator play a key role in the feasibility and financial viability of the project. The main componenet of such interaction is the purchase price the the utility is willing to pay for the cogenerator's excess power. To promote economic efficiency, a fair purchase price should be defined as the energy and capacity costs that the utility would avoid incurring as a consequence of the power provided by the cogenerator -- i.e., the utility's marginal savings. This is also called the utility's "avoided costs".

The energy component of the avoided costs, consisting of fuel and O&M expenses, can be interpreted as the variable cost component of the utility's marginal savings. Since there will always be some variable cost savings when power is provided by a cogenerator, there will always be some energy component of avoided costs. The capacity cost component consists of those generation, transmission, and distribution capacity expenses that can be avoided because of the power provided by the cogenerator. It is the responsibility of the government in a developing country to define and enforce regulations requiring purchase of power from cogenerators at the utility's avoided costs.

The financing of cogeneration projects has institutional as well as economic aspects. Generally, the fewer parties involved in a cogeneration project, the greater the benefits. In cases where the prospective cogenerators are unwilling or unable to provide the funds for the initial investment, however, innovative financing or investment promotion mechanisms are needed. Investment tax incentives, low duty on imported cogeneration equipment, and guaranteed loans are three means a government can use to make cogeneration investments more attractive. There are however, a number of innovative financing mechanisms that can eliminate the need for capital expenditure by the potential cogenerator, and can be carried out without direct government involvement. Such mechanisms

include:* shared saving arrangements, joint-venture arrangements between an energy user and an external investor, energy service agreements, variable-payment loans, and limited-term, guaranteed-payback loans.

*For an indepth description of alternative financing schemes for conservation projects in developing countries see: Hagler, Bailly & Company, Financing Energy Conservation in Developing Countries, 1985.

7 WHAT SHOULD AID DO?

Given AID's strategy goals in energy for development, which are articulated around the availability of energy sources and their stable supply at acceptable costs to the populations, there are clearly some specific potential activities for AID in the area of cogeneration. These activities can fall into four categories:

- Policy dialogue
- Research, development, and demonstration
- Training and technical assistance
- Information dissemination.

Policy dialogue:

Most AID-assisted countries are not aware of the national benefits that can be brought by cogeneration; namely, the increased supply and improved reliability of power system at a lower cost and in a shorter time frame and the "energy conservation" nature of this option, as it saves precious primary energy as compared to other generation options. Many countries, also, are not aware of the existing barriers to development of cogeneration. By working closely with national organizations in these matters, AID can help open the market for such alternatives and create substantial opportunities for the private sector in the management, ownership and engineering of such systems. In Pakistan, the Philippines, India, and Latin America, a number of initiatives have already been taken which should lead to some actual projects in the very near term.

Particularly beneficial to AID-assisted countries would be the establishment of a dialogue between the U.S. electric utilities such as Pacific Gas and Electric, the U.S. private sector, and their LDC counterparts. Such a dialogue could lead to a forum of knowledge and

technology transfer closely linked to other private-sector initiatives in energy.

Research, development, and demonstration:

As mentioned earlier, there is little experience in AID-assisted countries with the most promising cogeneration technologies (i.e., those relying on local fuel resources, with the exception of bagasse). AID could accelerate the development of such technologies, which include multifuel boilers with steam turbines and steam engines, dirty gas combustion turbines, and reciprocating engines. AID's RD&D work could consist of assisting one or two representative projects to convince the local communities of the technical and economic viability of such technologies. It is useful to note that gas turbines, which have been used in cogeneration plants in developed countries for more than 15 years, are still the exception in LDCs.

Training and technical assistance to missions:

Clearly, cogeneration sytems such as those mentioned above will not be successful if there are no qualified personnel to operate and manage them. Here also, AID -- because of the U.S. experience -- is in a unique position to provide such assistance through U.S. electric utilities (e.g., TVA, PG&E) and private owners and/or operators of cogeneration facilities. This training could be split into in-country training and training in the United States.

Furthermore, AID could assist developing countries in developing and implementing fair purchase price policies based on the true value of cogenerated power to electric utilities, i.e., utilities' marginal cost of generation, transmission, and distribution.

Similarly, only a few AID missions are really familiar with the concept and the benefits of cogeneration, and there is often a confusion between cogeneration, small power and renewable-based power systems such as solar, wind, or biogas. Technical assistance to the missions could therefore consist of potential assessments, institutional analysis, and program planning. Countries like Pakistan, India, the Philippines, Indonesia, Thailand, and Egypt should be the focus of the Office of Energy's activities in this area.

Information dissemination.

Since, cogeneration is still hardly understood in developing countries, it does not come as a surprise that only a handful of engineers are aware of cogeneration in LDCs. Still, cogeneration is one of the most effective ways to increase electric power production in the short-term while conserving energy. Because of its experience in training local officials and representatives of the private energy sector, AID could play the leading role in providing a cadre of LDC representatives involved in the planning and development of cogeneration with adequate information. Most of this information could come from (1) the materials used in training, (2) the results of RD&D activities, and (3) selected U.S. and LDC sources. Information should include technical, economic, financial, institutional, and managerial information.

Already a number of activities are initiated under ECSP. They include:

1. A number of prototype market assessments of selected cogeneration systems, primarily using local fuels

2. Creation of a Technology Transfer Team focusing on cogeneration

3. Preparation of two pre-investment packages for projects in Pakistan

4. Organization of a number of high-level seminars and workshops in Asia, the Near East, and Central America/Caribbean.

All these activities aim at a single goal: to develop a technical, managerial, and institutional capability in AID-assisted countries to identify projects and bring them to the point of "bankability" so that other donor organizations, such as the World Bank, the Asian Development Bank, can finance them.

Cogeneration is a new name for an old and proven practice. In broadest terms, cogeneration denotes any form of the simultaneous production of electrical or mechanical energy and useful thermal energy (usually in the form of hot liquids or gases). Cogeneration systems include dual-purpose power plants, waste-heat utilization systems, certain types of district-heating systems, and total-energy systems.

Traditionally, cogeneration systems have been differentiated according to the market sectors in which they are used. For example, total-energy systems are designed to provide electricity, heating, cooling, and sometimes even wastewater-treatment services to entire communities. Waste-heat utilization systems and dual-purpose power plants, on the other hand, have traditionally been used by the industrial and utility sectors. Although district-heating systems can be designed and constructed in a variety of ways, they are considered to be applications of cogeneration only when a utility or an industry seeks the thermal energy produced as a by-product of electrical generation; central district-heating systems, which generate thermal energy only, are not considered to be cogeneration systems.

The fundamental difference between a conventional energy system and a cogeneration system (illustrated in Exhibit A.1) is that the conventional system produces either electricity or thermal energy, and the cogeneration system produces both. In most market sectors, thermal energy is produced through the operation of equipment such as boilers and furnaces, and ectricity is purchased from a utility. Utilities, which are in the business of selling electricity, seek to maximize their production of electricity and historically have had limited incentive to recover thermal energy.

Exhibit A.1

Conventional Electrical and Process Steam Systems Compared to a Cogeneration System

(A) Conventional electrical-generating system requires the equivalent of 1 barrel of oil to produce 600 kWh electricity.

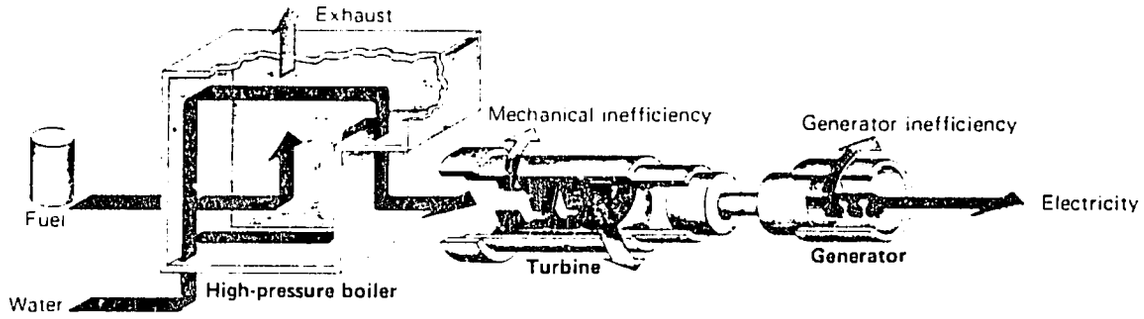

(B) Conventional process-steam system requires the equivalent of 2¼ barrels of oil to produce 8,500 lbs of process steam.

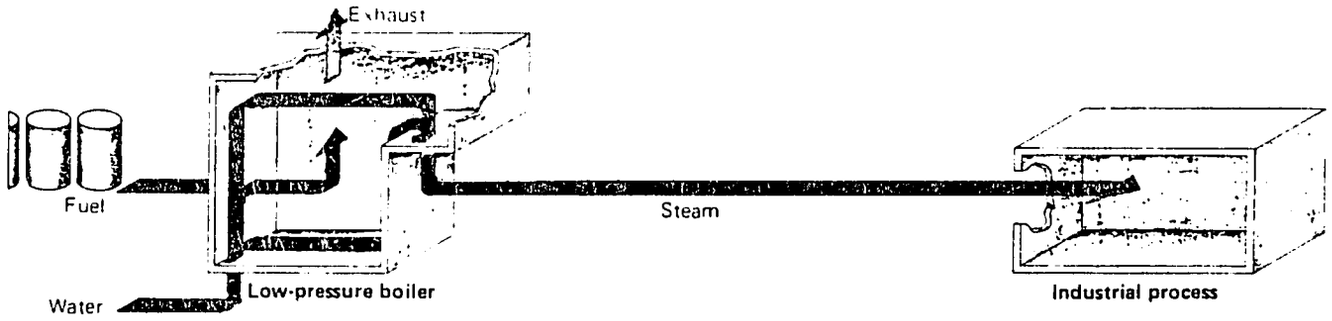

(C) Cogeneration system requires the equivalent of 2¼ barrels of oil to generate the same amount of energy as systems A and B.

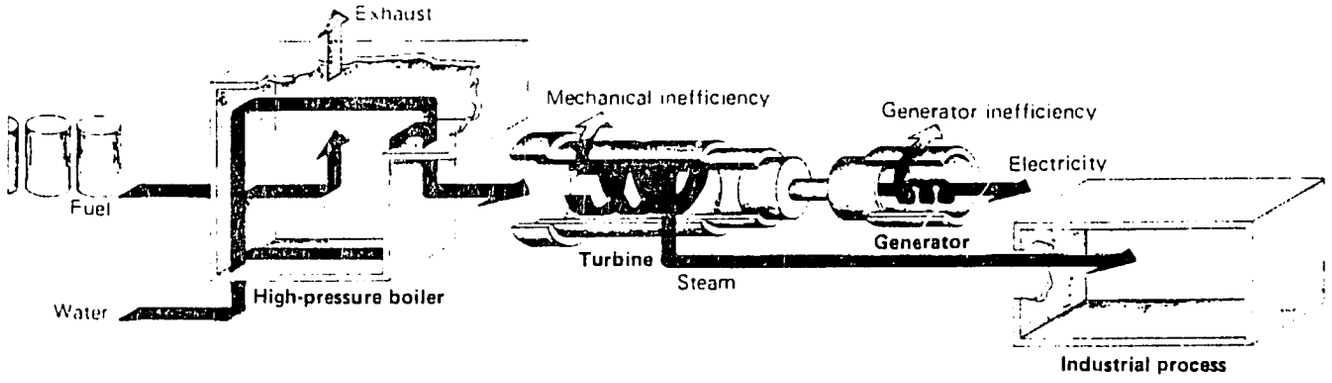

Source: U.S. Department of Energy, Cogeneration: Technical Concepts, Trends, Prospects, 1978

By recapturing and using some of the thermal energy that is normally discharged from an engine, a cogeneration system can reduce system fuel requirements by 10-30 percent. Cogeneration thus offers significant energy-saving potential.

Technically, there are two fundamental types of cogeneration system, differentiated on the basis of whether electrical or thermal energy is produced first (see Exhibit A.2). In a topping system, electricity is produced first, and the thermal energy exhausted is captured for further use, In a bottoming system, still-usable thermal energy is extracted from a waste stream (after it has been used in a process) to produce power, usually by driving a turbine to generate electricity. Both types of system vary in size and hardware depending on the specific electrical and thermal needs of the particular user application.

BASIC COGENERATION CONCEPTS

In a **topping system**, thermal energy exhausted in the production of electrical or mechanical energy is used in industrial processes, for residential/commercial energy systems, or to provide district heating and cooling. The equipment used to generate the thermal-to-electrical conversion is called a "heat engine" (or "prime mover"). Three types of heat engine are commonly used today in topping systems, each with different electrical-generating capabilities and varying degrees of fuel flexibility: steam turbine, gas turbine, and diesel engine. Topping devices being considered for future cogeneration installations include Stirling engines, fuel cells, and thermionic devices.

The fuel flexibility of a heat engine, or its ability to operate efficiently using alternative fuels, has become increasingly important in recent years, as the availability of clean-burning fuels such as oil and natural gas grows less certain. One widely used heat engine, the **steam turbine** (see Exhibit A.3), has substantial fuel flexibility.

The boiler in a steam-turbine system, which generates steam through the combustion of fuel, can be "fired" by oil, natural gas, coal and coal-derived liquids and gases, wood, or synthetic liquids and gases. Mechanical energy is produced as the high pressure

Exhibit A.2

Topping and bottoming cycle cogeneration systems

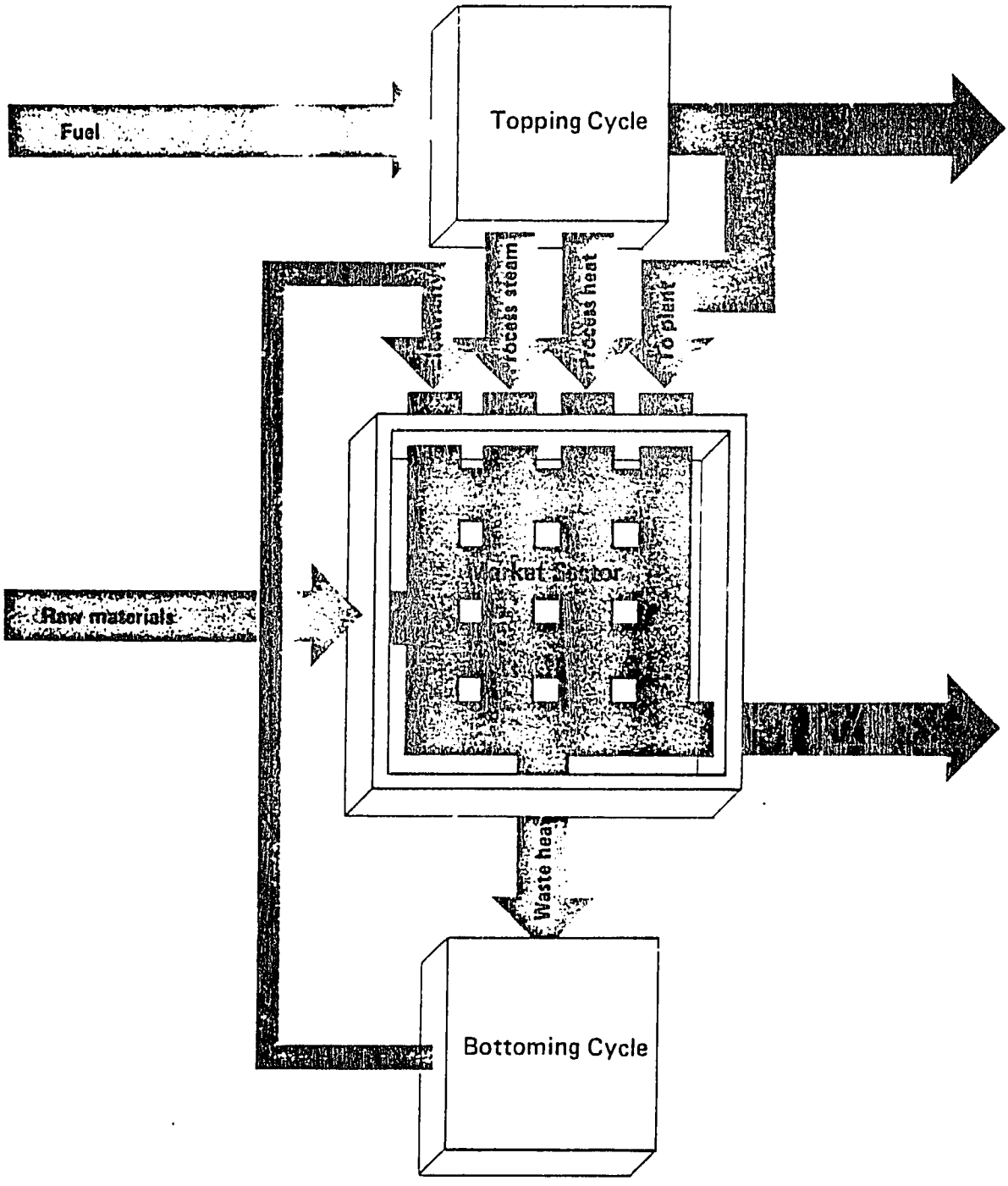

Source: U.S. Department of Energy

Exhibit A.3

Steam-turbine toppping system

Exhibit A.4

Gas-turbine topping system

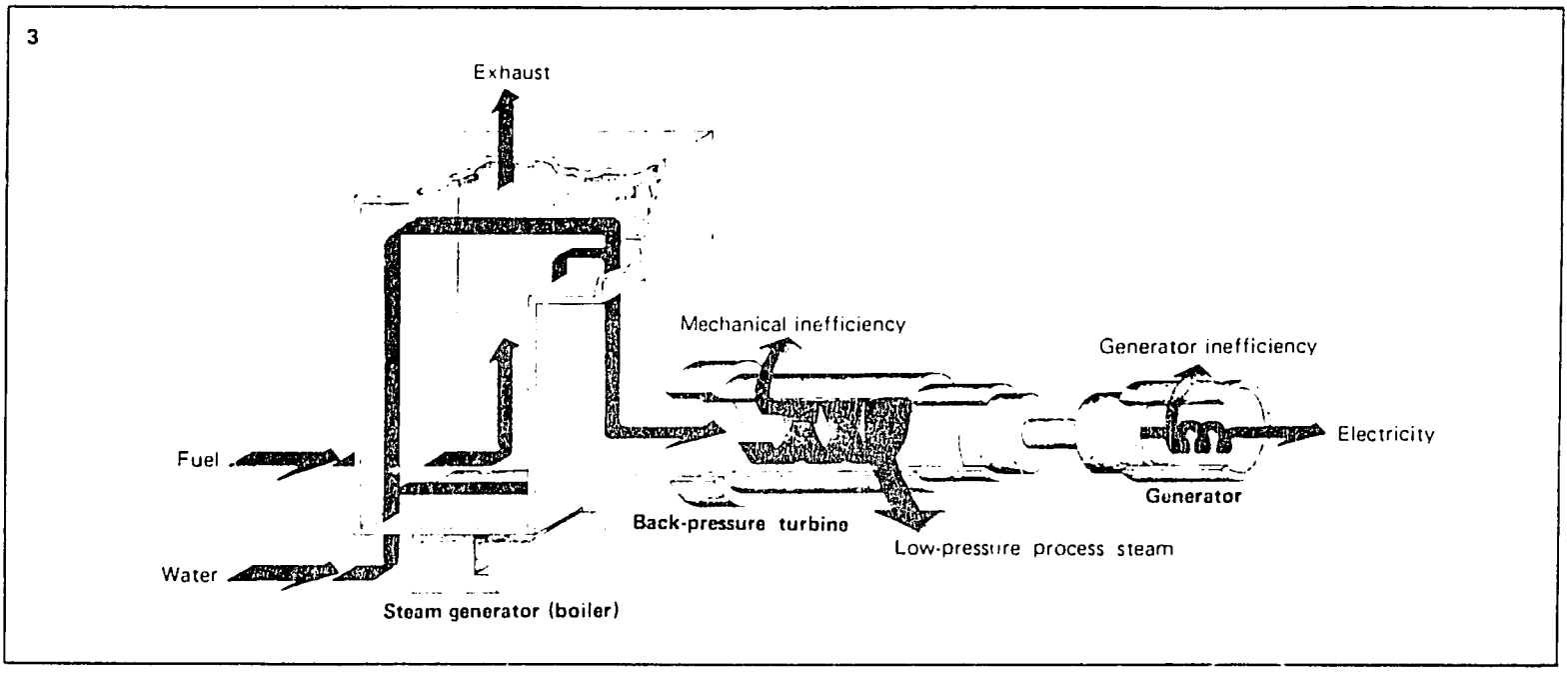

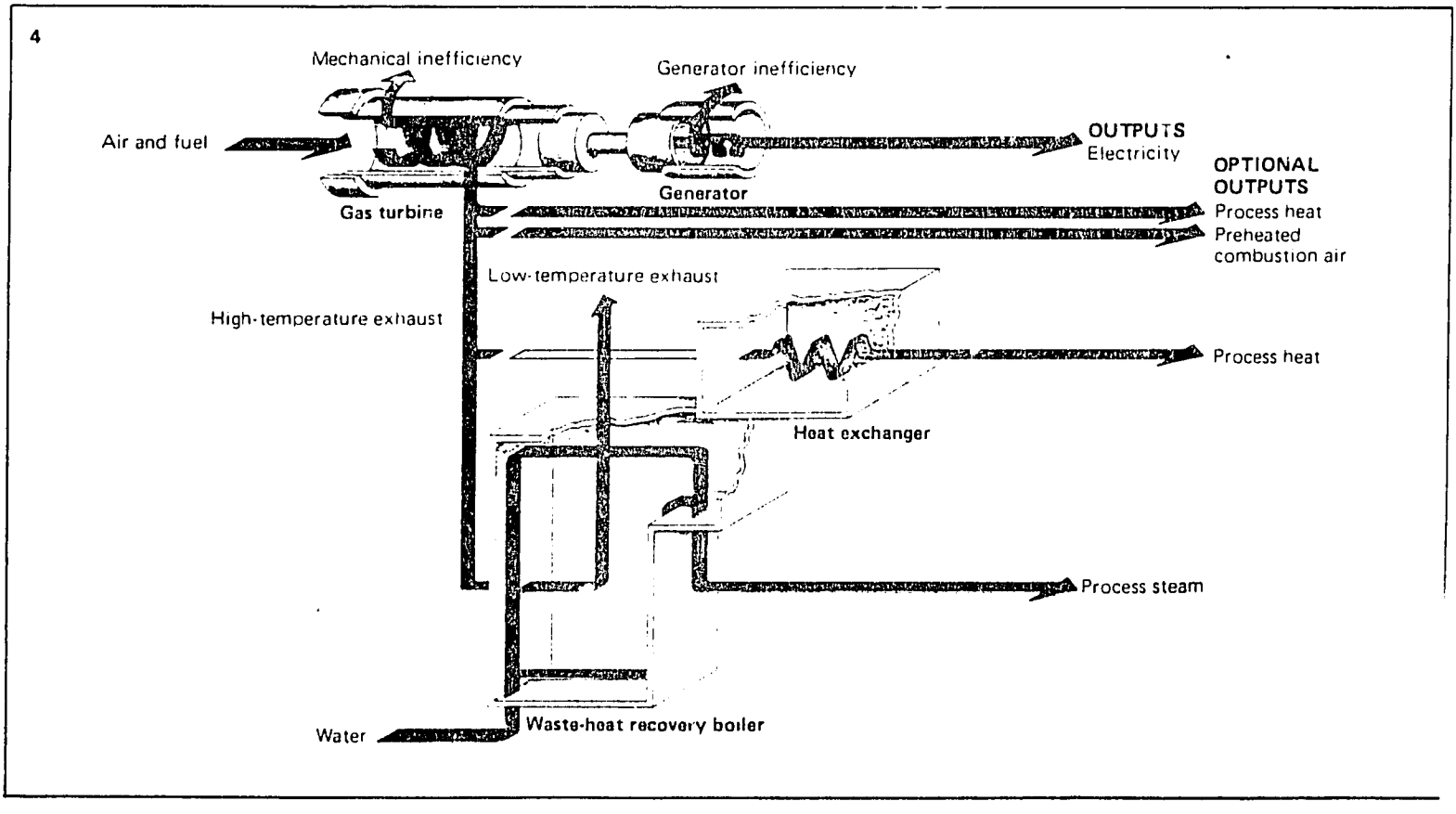

Source: U.S. Department of Energy

steam drives a turbine. Through the use of a generator, this mechanical energy is then converted to electricity. The low pressure exhaust from the turbine* can be used for industrial-process applications or to provide space heating and cooling.

Instead of generating steam to drive a turbine as a means of producing electricity, the **gas turbine** (see Exhibit A.4) and the **diesel engine** (see Exhibit A.5) both burn fuel directly and use the combustion gases to produce mechanical shaft power, which is then used to drive a generator to produce electricity. Currently, these heat engines require oil (primarily light distillates) or natural gas for operation. Dependence on these premium fuels has limited the widespread application of cogeneration systems using gas turbines and diesel engines, even though they offer potential energy savings of up to four times those possible with a steam-turbine system.

The exhaust from gas-turbine and diesel-engine systems can be used for a variety of purposes, ranging from process heat to the production and subsequent use of low-pressure process steam. To generate steam, the hot exhaust gases are passed through a waste-heat-recovery boiler, where the thermal energy is transferred to water. The gases effectively serve as fuel for the boiler.

The high-pressure steam produced in the waste-heat-recovery boiler can also be used to feed a steam turbine and produce additional electrical energy. This process is often called a "combined" cycle (see Exhibit A.6).

In a **bottoming system**, the process is reversed. Fuel is consumed to produce the high-temperature thermal energy needed in such applications as a steel-reheat furnace, a glass kiln, or an aluminum-remelt furnace. Heat is extracted from the hot-exhaust waste stream and transferred to a fluid (generally through a waste-heat-recovery boiler), which is then vaporized. The vapor is used to drive a turbine, which produces electrical or mechanical energy. The closed-loop operation is completed when the stream is liquefied and pumped back

*Turbines that exhaust low-pressure steam are called back-pressure turbines.

Exhibit A.5

Diesel-enginer topping system (process-steam configuration)

Exhibit A.6

Combined-cycle topping system

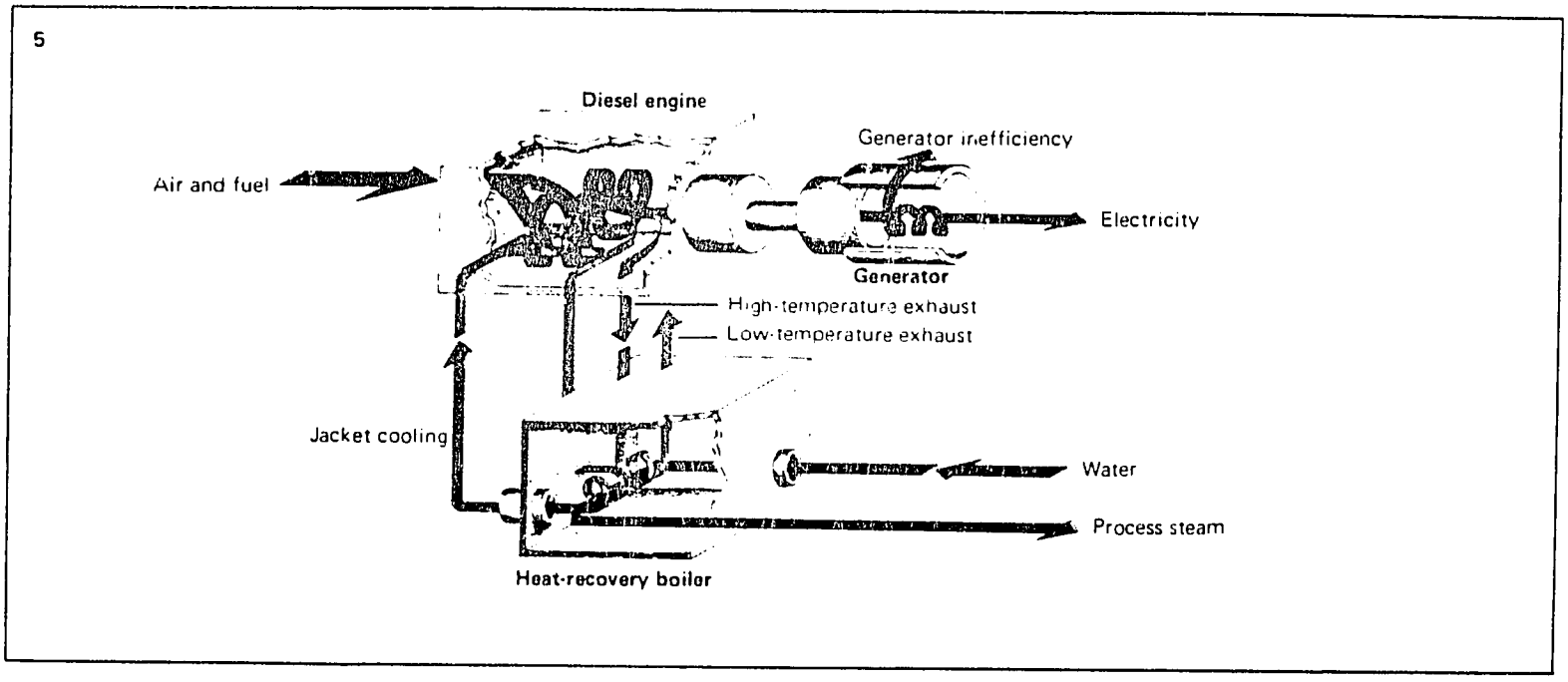

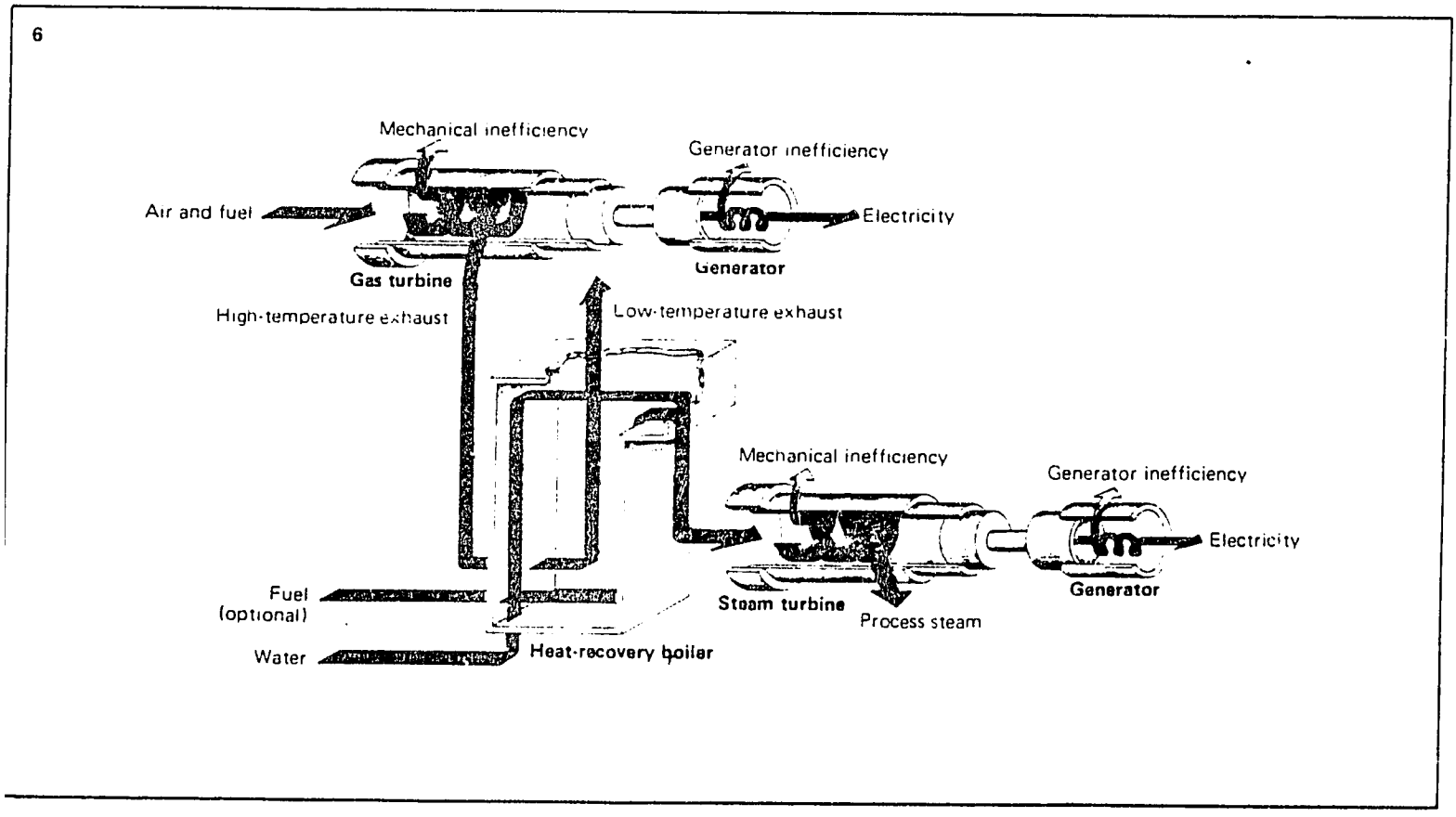

Source: U.S. Department of Energy

Exhibit A.7

Rankine bottoming system

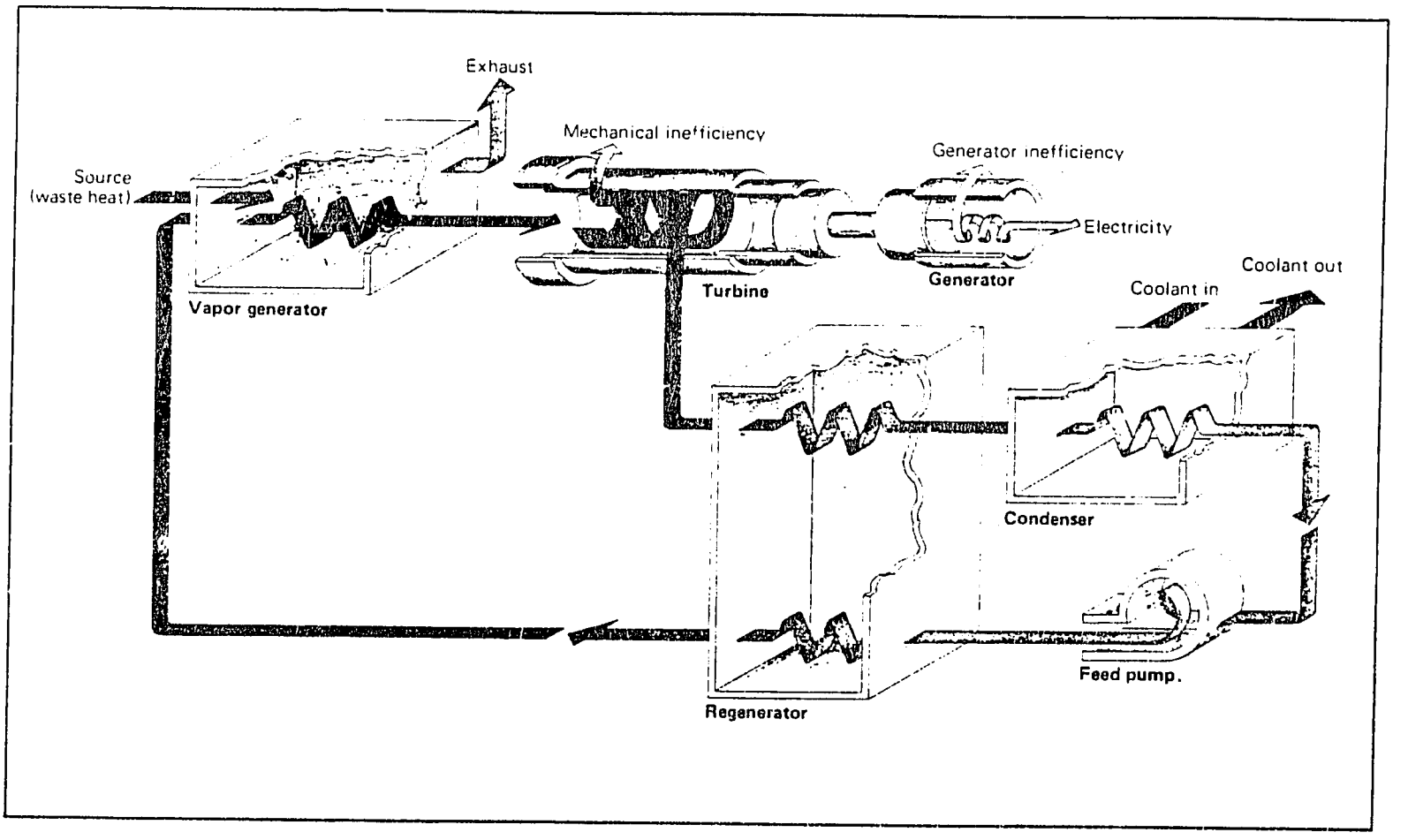

Source: U.S. Department of Energy

to the waste-heat recovery boiler, where the sequence is repeated (see Exhibit A.7).

Two types of fluid have been used in bottoming systems: water, or an organic fluid such as toluene, fluorinol, or Freon II. Organic fluids provide greater flexibility because their properties permit operation at temperatures lower than those at which water vaporizes; moreover, they operate with greater efficiency at high temperatures. Such "phase-change" systems (for example, water to steam) are generally called Rankine systems.

The economic considerations that must be taken into account by a cost minimizing firm considering investments in cogeneration are conceptually straightforward, and depend on a firm's electricity and heat load, fuel prices, electricity prices, and the cost of capital.

We begin by considering a firm producing some product that requires steam for the production process. We characterize the firm's demand for steam by a steam load duration curve $H = L(Q)$ depicted in Exhibit B.1. The steam load duration curve represents the number of hours(H) during a year that the industrial process requires a steam load of Q pounds per hour. Since steam loads generally vary over the year due to seasonal and time-of-day fluctuations in production, the steam load duration curve generally has a shape such as that depicted in Exhibit B.1. As drawn in this exhibit, the peak steam load is P pounds per hour and the minimum steam load is BP pounds per hour ($B \leqslant 1$) with a duration of H_mm hours per year ($H_m < 8760$). The steam load duration curve is conceptually the same as the more familiar electricity load duration curve that characterizes the variable loads placed on an electric power system except that we are looking at an industrial firm's process steam requirements rather than an electric utility's electrical power load. The typical industrial firm that does not produce electricity jointly with steam meets its steam load requirements by installing low pressure boilers with capacity sufficient to meet peak steam load requirements. These boilers are then fired with fossil fuel (coal, natural gas, oil, wood wastes, etc.) to generate sufficient steam to meet the firm's instantaneous steam load requirements. For simplicity, we assume that both conventional boiler technology and cogeneration technology are characterized by constant return to scale. We express all cost figures in terms of the number of pounds of steam delivered to the industrial process. The firm using conventional boiler technology incurs annualized capital costs for conventional boilers of K_b dollars per pound of process steam capacity and operating costs (primarily energy costs) of V_b per pound of steam delivered

Exhibit B.1

Example of Steam Load Duration Curve

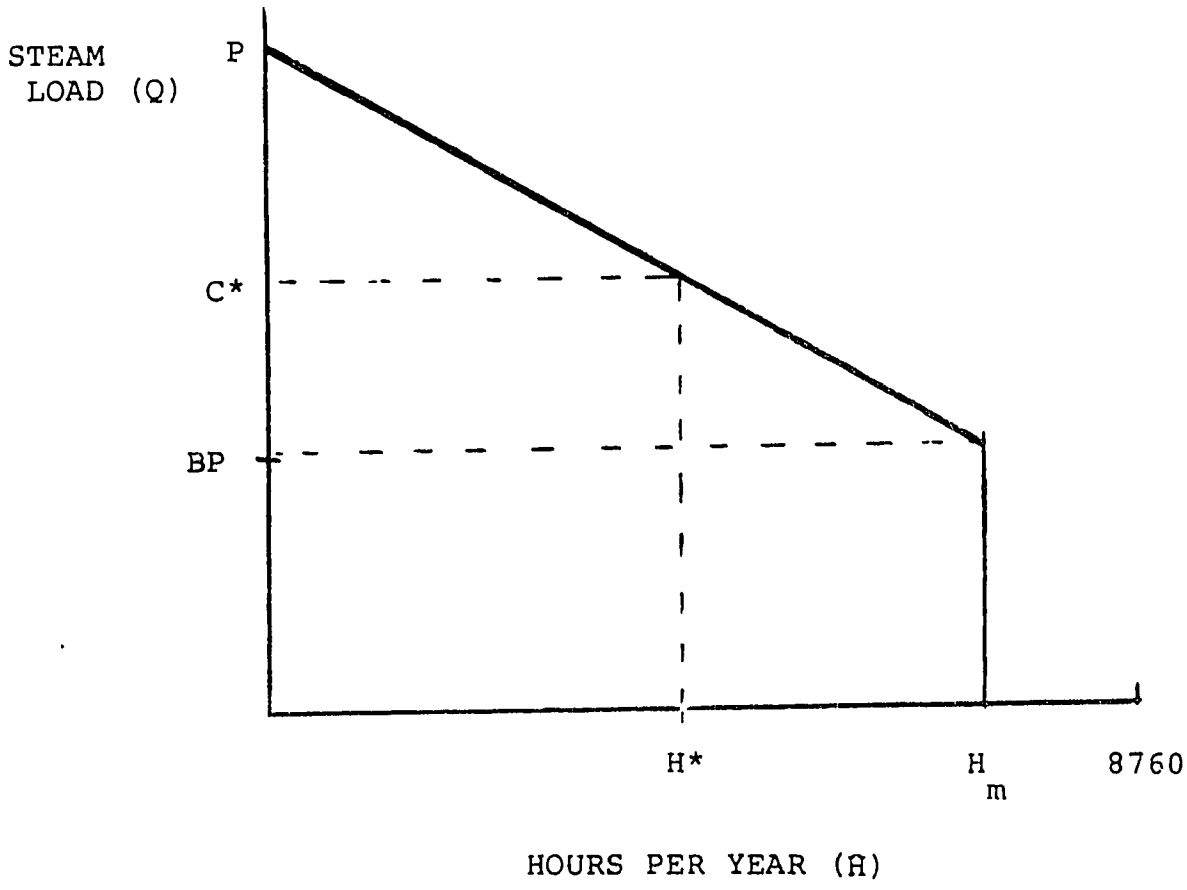

to the process. V_b is in turn equal to the total heat rate of the conventional boiler (T_b = Btus of fuel input per pound of process steam delivered to the process) times the price of the fuel used to fire the boiler (P_b).

$$V_b = T_b \times P_b \tag{1}$$

The total costs per year incurred by a firm to provide process steam alone is then given by:

$$TC_b = K_b \cdot P + V_b \int_0^P L(s)\,ds \tag{2}$$

To cogenerate electricity, a firm must incur additional operating and capital costs compared to what is required to generate process steam alone. In return for these additional costs, the firm produces electricity, which has some value either as a replacement for electric power that the firm would otherwise purchase from a utility or that can be sold back to the utility at some price (as a practical matter, most existing cogenerators produce less electricity than they consume, but this is not a necessary characteristic). For cogeneration to be economical, the value of the electricity produced must be greater than the incremental capital plus operating costs incurred to cogenerators.

To cogenerate electricity using conventional cogeneration topping technology, a firm must install high-pressure boilers rather than low-pressure boilers to produce steam of high enough pressure to turn a turbine. The high-pressure boilers will normally be more expensive than the low-pressure boilers a firm would ordinarily use to meet its steam needs. The firm must also invest in turbine/generator equipment and possibly heat recovery equipment (depending on the cogeneration technology used). Let us define the annualized capital cost of cogeneration capacity as K per pound of process steam delivered to the process ($K_c \geqslant K_b$). In cogeneration mode, the firm produces high-pressure steam that is run through a turbine, which in turn runs a generator to produce electricity. The exhaust steam from the turbine is then used in the industrial process. As a result, the amount of fuel required by a cogeneration system to meet a specific process steam requirement is greater than what would be used to meet

the process steam demand directly from conventional low-pressure boiler).

Let the operating costs of cogeneration system (primarily energy costs) per pound of process steam delivered to the industrial process be V_c. V_c is equal to the total heat rate of the cogeneration system times the cost of the fuel (P_c).

$$V_c = T_c \cdot P_c \tag{3}$$

We assume that the firm operates both its conventional system and its cogeneration system so that it follows its thermal loads. We also assume (consistent with reality) that the firm can build a mixed system that can meet the peak steam load by relying partially on conventional boilers delivering heat to the process directly and partially on cogeneration capacity where high-pressure steam is first passed through a turbine and the turbine exhaust provides additional steam to the process. Let C be an arbitrary amount of cogeneration capacity installed by the firm. Let E be the electricity production rate of the cogeneration system (kWh of electricity per poound of process steam) and P_e the price of electricity. The value of the electricity produced via cogeneration per pound of process steam is then given by:

$$V_e = E \times P_e \tag{4}$$

and the net costs of process steam to the firm if it cogenerates are given by:

$$TC_c = K_c \cdot C + K_b\ (P-C) + (V_c - V_e) \int_0^C L\ (s)ds + V_b \int_C^P L(s)ds \tag{5}$$

The costs of a cogeneration system consist of the costs of building and operating the conventional part of the steam production system and the costs of building and operating the cogeneration portion of the system net of the value of the electricity produced. To pick the optimum amount of cogeneration capacity (C^*), we want to minimize (5) with respect to C. The first order

condition, assuming that there is an interior solution with C greater than zero, is given by:

$$K_c - K_b + (V_c - V_e)\ L(C^*) - V_b\ L(C^*) = 0 \qquad (6)$$

We can solve (6) for $L(C^*)$ to obtain:

$$L(C^*) = \frac{K_c - K_b}{V_b - V_c + V_e} = H \qquad (7)$$

$$(V_b - V_c + V_e) > 0$$

Similarly, for the particular specification of the steam load duration curve used in Exhibit B.1, we can derive C^* itself.

This appendix describes the methodology used for calculating the cost of electricity generated from small modular cogeneration systems.

We assume that a low-temperature industrial plant in a developing country purchases a modular cogeneration system available in the U.S. market to supplement its existing boilers and cogenerates heat and electricity for on-site use. The cost of cogenerated electricity to the industrial plant consists of the system's capital cost, operation and maintenance costs, and the cost of incremental fuel used for generating electricity. For each Btu of fuel input, the cogeneration system output contains n 20 Btu of heat, in the form of hot gas or steam, so (1-n) Btu is the incremental fuel used for electricity production.

Operation and maintenance costs are usually a very small fraction of capital cost (less than 5 percent), and are ignored. To calculate the electricity costs, we use a levelized cost approach using the following assumptions:

- Capacity factor = 80 percent
- Plant life = 25 years
- Discount rate = 10 percent, 20 percent.

$$e_e = e_c + e_f$$

e_e = levelized cost of electricity from cogeneration system

e_c = levelized cost of capital expenditures

e_f = levelized cost of fuel.

$$e_c = \frac{C\ (A/P,\ r\ \%\ ,25)}{E \times 8760 \times CF}$$

$e_f = \frac{Q_e}{E} \times P_f$

C = capital cost

(A/P, r%, 25) = Annualized capital change factor

E = electric capacity of cogeneration system

CF = capacity factor

Q_e = incremental fuel input for electricity generation

P_f = fuel price ($/mmBtu).

Example

For Thermo Electron's Tecogen system:

fuel input = 776,000 Btu/hr

energy output = 60 kW electricity
440,000 Btu/hr thermal

Incremental fuel input for electricity generation (Q_e)

= 776,000 - 440,000

= 336,000 Btu/hr.

Capital cost (C) = $55,000.

$$e_f = \frac{336{,}000 \text{ Btu/hr}}{60 \text{ kW}} \times P_f \text{ (\$/mmBtu)} \times 10^{-4} \text{ (mmBtu c / Btu. \$)}$$

$$e_f = 0.56\ P_f$$

$$e_c = \frac{55{,}000(A/P,\ r,\ 25)}{60 \times 8760 \times 0.80} \times 100 \text{ c/ \$}$$

$e_c = 11.2\ (A/P,\ r,\ 25)$

$e_e = 11.25\ (A/P,\ r,\ 25) + 0.56\ P_f$

$r = 10$ percent, $e_e = 1.3 + 0.56\ p_f$

$r = 20$ percent, $e_e = 2.6 + 0.56\ P_f$

The specifications for modular cogeneration systems are shown in Exhibit C.1.

Exhibit C.1

Product Guide: Small Cogeneration Systems

Company	Model, capacity, and application	Cost	Fuel input, thermal and electric output	Functions and features	Warranty, service, and financing
Cogenic Electric Systems Inc. 127 E. 64 Street New York, NY 10021	Model M-100GWI, 100 kW. Intro. 1982. For commercial, industrial, and institutional users who intend to use all electricity generated.	$100,000 delivered and installed.	Natural gas-fired at 1.150 mmBtu/hr consumption. Electric output, 100 kW. Thermal output, 635,000 Btu/hr of 180°F hot water.	Induction generator, synchronous generator optional. Sound attenuation 60 Dba at 3 feet. Enclosure provided. Enclosed unit is 72 inches wide, 144 long, 76 high. Vibration-isolated plumbing. Overhaul after 50,000 hours. Load-balancing condenser included. Heat exchangers included. Electromechanical and solid-state controls and switching gear included in enclosure. 14 remote sensing functions.	1-year warranty, parts and labor. Financing available for purchases. Shared-savings plans available. Factory maintenance contract available for purchases. Service contracts included in shared savings.
	Model M-120DWS, 120 kW. Intro. 1982. For commercial, industrial, and institutional users who intend to use all electricity generated.	$100,000 delivered and installed.	Diesel-fired at 1.25 mmBtu/hr consumption. Electric output, 120 kW. Thermal output, 700,000 Btu/hr heat.	Synchronous generator, induction generator optional. Sound attenuation 60 Dba at 3 feet. Enclosure provided. Enclosed unit is 72 inches wide, 144 long, 76 high. Vibration-isolated plumbing. Overhaul after 50,000 hours. Load-balancing condensers included. Heat exchangers included. 14 remote sensing functions. Electromechanical and solid-state controls and switching gear included in enclosure.	1-year warranty, parts and labor. Financing available for purchases. Shared-savings plans available. Factory maintenance contract available for purchases. Service contracts included in shared savings.
Oman Corporation 1400 73rd Avenue, NE Minneapolis, MN 55432	Model 200DFY. 200-kW capacity. Intro. 1976. For institutional and commercial users such as laundries, hospitals, and hotels using steam for processes or air conditioning; also generates hot water. Models not pre-packaged.	Priced at $135,000 or $650 per kW, including heat recovery equipment and parallel panels. Installation about 50 percent of equipment costs.	Diesel fuel input. 2.28 mmBtu/hr. Thermal output, 682,000 Btu/hr in steam, hot water, or combination. Electric output, 200 kW, up to 600 volts.	Synchronous generator. Sound level 95 Dba with housing. Ear protection necessary after 8 hours of exposure at levels higher than 90 Dba. Sound attenuation enclosure optional. Generator set measures 114 inches by 39 by 30 and weighs 5,930 pounds. Soft plumbing is standard at low pressure. Overhaul every 25,000 kWh. Load-sharing, metering panel, protective relaying optional. Heat exchangers located externally. Safety controls are remote sensing functions. Switch gear controls are solid-state or electromechanical. Solid-state engine controls located on set. Switch geat controls located in internal bays.	12-month operating warranty, or 18-month warranty from shipment date, including parts and labor through distributor. No financing program currently offered. Delivery within 120 days.

Exhibit C.1 (continued)

Product Guide: Small Cogeneration Systems

Company	Model, capacity, and application	Cost	Fuel input, thermal and electric output	Functions and features	Warranty, service, and financing
Re Energy Systems, Inc. 637 West Baltimore Pike Media, PA 19063	Total Energy Power Plant (TEPP): TEPP-NG (natural gas-fired), TEPP-D (diesel-fired), TEPP-P (propane-fired), TEPP-B (biogas-fired). 8 sizes, 35 to 200 kW. Intro. 1981. Turnkey, modular, prepackaged. For commercial, industrial, and institutional users.	$1,150 per kW for 200-kW system, up to $1,300/kW for 35-kW system; includes turnkey installation.	Fuel input, 10,000 Btu/hr per kW capacity. Thermal output, 6,739 Btu high-pressure steam. Electric output, 1 kWh per 3.413 Btu. Efficiency 94 percent, 60 percent thermal, 34 percent electric.	Size: 8 by 8 by 2 feet to 8 by 8 by 20 feet. All heat exchangers, switch gears, and controls located in fiberglass enclosure. 45 Dba outside. Ear protection unnecessary. Induction or synchronous generator. Sized to minimum demand for thermal Btu (steam/hot water). Non-vibrating plumbing with flexible steel and aircraft-quality couplings. Microprocessor-based temperature and pressure controls and dial-out alarm system. Remote or direct switch gear. Load-balancing condenser included when necessary. 6 to 17 hardwired remote sensing functions including temperatures in and out of heat exchanger, firing temperature, oil temperature, and pressure. Solid-state or electromechanical controls. No serious overhaul necessary before 5 years with adequate maintenance program.	Cost includes 5 years service, maintenance. After first 5 years, 5-year service contracts available at one-third of initial system cost. Four financing options: outright purchase, lease, shared savings, installment purchase, through electricity purchases from firm, which owns electric generating capacity for 5 to 10 years.
ThermoElectron Corporation 101 First Avenue P.O. Box 450 Waltham, MA 02254	Tecogen. 60 kW. Intro. 1983. For dairies, hospitals, nursing homes, food and beverage processors, platers, multi-unit residential buildings and olympic-size pools. Prepackaged system. Modular, up to 180 kW.	$35,000 for 400- and 480-volt models; $37,000 for 200-, 220-, 240-volt models uninstalled. Installed cost about $50,000 to $55,000,	Uses 760,000 Btu/hr of natural gas. Produces 60 kW and 440,000 Btu 240°F hot water per hour.	Induction generation 60 kW/75 kVa. Sound attenuation, 70 Dba. System includes sound attenuation enclosure. No ear protection necessary. Unit size is 3.5 feet by 3.5 by 7, including control box and switch gear. Unit weighs 3,000 pounds. Hard plumbing connections to unit. No vibration isolation needed. 8,000 hours minor overhaul; valve check; 16,000 hours or more for major overhaul. No load balancing condenser necessary. All heat exchangers located internally. Remote sensing functions included. Solid-state controls located on equipment or can be remotely located, 2 feet by 1 foot by 8 inches box. Switch gear included with unit.	500-hour warranty, parts and service. Service contract includes full warranty, oil, and filters. Financing, leasing, and shared savings are available.

Source: Hagler, Bailly & Company, based on information from cogeneration equipment manufacturers and Energy User News