PN-AAU-969 45029

Mixed Farming Technical Report

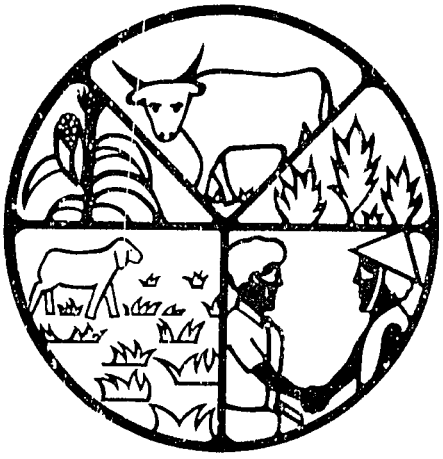

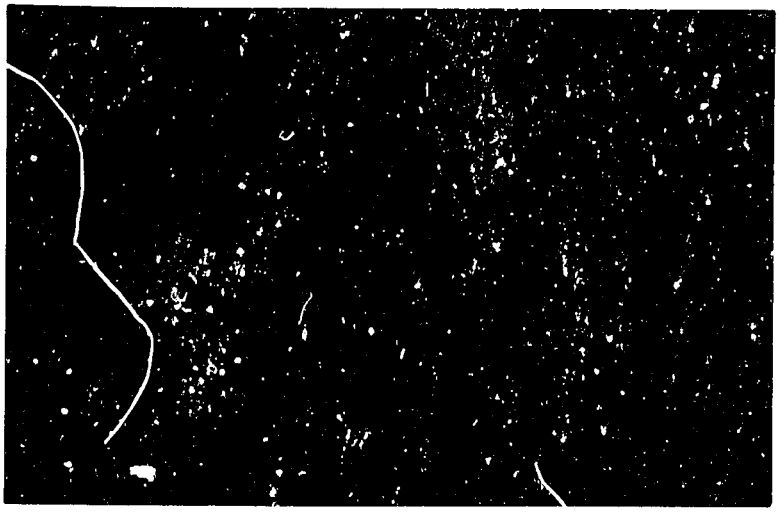

GAMBIAN MIXED FARMING AND RESOURCE MANAGEMENT PROJECT

Ministry of Agriculture and Natural Resources
Government of The Gambia

Consortium for International Development

Colorado State University

THE GAMBIA CATTLE HERD: A SURVEY REPORT

by
Peter Vesseur
E. J. Hurkens
Jerry Eckert
Jeanne C. Crouch
Laurens Mol

Technical Report No. 13
May 1986

THE GAMBIAN CATTLE HERD:
A SURVEY REPORT

by

Peter Vesseur
E. J. Hurkens
Jerry Eckert
Jeanne C. Crouch
Laurens Mol

MIXED FARMING AND RESOURCE MANAGEMENT PROJECT
TECHNICAL REPORT No. 13

COOPERATIVE PROJECT

Gambia Department of Animal Health and Production
Gesellchaft für Technische Zusammenarbeit
The Gambia Mixed Farming and Resource Management Project

Ministry of Agriculture
Banjul, the Gambia

May 1986

ACKNOWLEDGEMENTS

Data collected by Peter Vesseur and E.J. Hurkens of G.T.Z. and the Staff of the Statistical Unit of the Department of Animal Health and Production.

Data compiled, analyzed and report written by Dr. Jerry Eckert and Jeanne C. Crouch at Colorado State University under contract with the Consortium for International Development, Tucson, Arizona, with support of the United States Agency for International Development AID Grant Agreement No. 635-0203.

Another research report based on these same data is "An Analysis of the Composition of the National Herd of The Gambia," by P.C. Vesseur and E.J. Hurkens, Rijks Universiteit, Utrecht, The Netherlands.

All expressed opinions, conclusions or recommendations are those of the authors and not of the funding agency, the G.T.Z., Gambia Government or the United States Government.

MIXED FARMING PROJECT
TECHNICAL REPORTS

1. Alers-Montalvo, Manuel, Fasainy Dumbuya, Glen Fulcher, Baboucar Gai, John Haydu, 1983. Farming Activities in The Gambia, A Survey (Preliminary Report).

2. Hedrick, Don and Musa Bojang, 1983. Final Report of the Forage Agronomist.

3. Kidman, Don and Solomon Owens, 1985. The Commercialization of Maize in The Gambia.

4. Marlett, Melanie and Marie Sambou, 1985. Food Production/Consumption Linkage.

5. Eastman, Clyde and Momodou O. S. Jammeh, 1985. Gambian Livestock Owners Associations: A Brief Evaluation.

6. Spencer, William P., 1985. A Handbook of Graphs and Tables of Market Prices of Selected Agricultural Products in The Gambia, 1985-85.

7. Russo, S., 1986. Leucaena: A Potential Forage Crop for The Gambia.

8. Spencer, William, J. B. Eckert, P. Jakus, 1986. Estimating Liveweight and Carcass Weight in Gambian N'Dama Cattle.

9. Eastman, Clyde, 1986. The Cold Hard Realities of Agricultural Development.

10. Haydu, J., M. Alers-Montalvo, J. B. Eckert, Fasainy Dumbuya, Baboucar Gai, Lamin Jabang, 1986. Mixed Farming in The Gambia.

11. Russo, Sandra L., 1986. The Use of Crop Residues for Animal Feed in The Gambia.

12. Russo, Sandra L. and Bambo Ceesay, 1986. Research in Forage Agronomy by the Mixed Farming Project, 1983-1986.

Mixed Farming Project reports available from:

USAID Mission to The Gambia Banjul	MFP Office DAHP Abuko	Agricultural Economics Colorado State University Ft. Collins, Colorado

THE GAMBIAN CATTLE HERD: A SURVEY REPORT

INTRODUCTION

The importance of livestock to The Gambia's overall agricultural development is widely recognized. Much of the nation's land resources are suitable primarily for grazing. Livestock are widely held yet it is believed that productivity is extremely low and that considerable potential exists for increasing incomes and improving diets through livestock production.

One significant impediment to developing livestock improvement programs lies in the scarcity of accurate data. Even the number of livestock in Gambia is open to conjecture. Scientific analyses of production, stock density, rangeland carrying capacity and population dynamics are only just now receiving attention. For the present, livestock programs proceed in the belief that livestock numbers are excessive relative to dry season carrying capacity, creating ecological stress on the range and lowering animal nutrition levels to the point that body growth, reproduction and lactation are impaired. Trypanosomiasis is endemic in The Gambia, and while the local N'Dama breed has shown some tolerance to the disease, this factor further lowers productivity. Finally, Gambians apparently hold cattle for social reasons and as a store of wealth rather than for their contribution to recurrent household incomes. Herd management is, thus, fairly insensitive to product prices. Markets for livestock and livestock products are still underdeveloped.

To summarize, serious obstacles face Government's efforts to improve the livestock subsector. Recognizing this fact, the Federal Republic of Germany through their foreign assistance agency, GTZ[1], sought to strengthen the data base for livestock programs through a field survey of the cattle herds nationwide. This paper reports the results. The idea was conceived and

---

[1]Gesellchaft für Technische Zusammenarbeit.

directed through the data collection phase by Dr. Laurens Mol. The quality of the data is a tribute to the efforts of E.J. Hurkens and Peter Vesseur who covered the entire country examining cattle herds at the village level. Raw data were processed by the USAID Gambian Mixed Farming and Resource Management project utilizing the Colorado State University computer and project staff on campus. Jeanne Crouch developed the computer program and completed the data processing. Encouragement was provided throughout by the Ministry of Agriculture, Government of The Gambia. While the effort was truly a cooperative venture, this report would not exist were it not for the work of E.J. Hurkens and Peter Vesseur and their dedication in obtaining the raw data.

Description of the Survey

Methodology

The survey was designed to physically enumerate 2.5 percent of the national herd. Using data from the Department of Animal Health and Production (DAHP), a cattle herd of approximately 300,000 animals was postulated. Verbal reports from DAHP experts and others suggested that average herd size approximated 70 animals. Divisional cattle populations from DAHP data were thus divided by 70 to indicate the number of samples to be taken in each Division in order to achieve a 2.5 percent coverage. As will appear below actual herd size was 82.5 animals. Therefore, somewhat more than the desired percentage was enumerated, if, in fact, the herd stood at 300,000 in the year of the survey.

Having determined the number of samples per Division, a grid containing that number of points spaced uniformly was laid over divisional maps. Villages nearest the grid points became sample villages. Where a village contained more than one herd, herd owners decided which was to be sampled.

The sample unit was taken as a complete village herd. Herds are a functional unit, managed together as an entity. Animals are tethered together during the night, herded out together (except

calves) for grazing and they are milked as one group, although the milk may be separated according to the animals' ownership. A herd usually contains animals owned by several individuals, however, it is generally herded by a single herder, or the herder and his relatives.

The principal respondent, in most cases, was the herder. Animals were physically examined and classified with the assistance of the respondent. Information was gathered on the reproductive history of each cow, the use of each male or steer, the ages of all animals, and changes in herd size. The period of references was the 12 months immediately preceding the date of the interview. Data on sex and dental structure are based on physical examination of individual animals. Data on mortality, trade, age, calving history and other factors are based on herder recollection. Since herders know their animals intimately and, usually, have a prolonged association with their herd, their recall of histories for individual animals must be accepted as the most accurate data available under the circumstances.

Coverage

The sample was nationwide with explicit attempts to develop representative data for each Division. In all, some 8,415 cattle were enumerated, distributed as shown in Table 1. The intent had been to distribute the sample of herds according to the distribution of animals. The methodology assumed that the herd size of approximately 70 was uniform throughout the country. As will appear subsequently (Table 2), this assumption is not valid. Thus, the survey examined a somewhat larger fraction of the animals in Lower River Division (LRD) and North Bank Division (NBD) than elsewhere. For this reason the absolute numbers of livestock in various categories as measured in this survey cannot be expanded to national estimates by any uniform adjustment factor.

Table 1. Distribution of the Sample by Division

Region	Herds Sampled	Total Animals Number	Total Animals Percent	Female Animals
URD	27	2133	25.3	1343
MID	38	2732	32.4	1963
LRD	8	797	9.4	532
NBD	13	1488	17.9	1060
WD	16	1265	15.0	893
The Gambia	102	8415	100.0	5791

Table 2. Distribution of the Sample by Tribe of Owner or Herder

Tribal Affiliation	Owner Herds	Owner Cattle	Herder Herds	Herder Cattle
Fula	29	2079	75	6385
Mandinka	35	2970	16	1225
Serehuli	9	844	0	0
Wollof	17	1663	6	544
Jola	10	694	4	223
Other	2	165	1	38

Relationships, in terms of ratios and percentages from the survey, can be used to characterize larger populations. However, estimates of national cattle numbers must be drawn from livestock censuses or other sources and not as expansions of this survey.

Despite this one reservation, the analysis below rests on an enumeration of a very large number of animals and a geographic stratification with minimal bias, if any, in the selection of herds. Herd composition and population dynamics are, therefore, probably accurately depicted.

Herd Composition

Composition by Sex

Table 3 presents the average size of herds found in each Division. Three Divisions recorded herd sizes between 70-80, approximately the level initially assumed. However, the LRD and NBD showed significantly larger herds at 100 and 114 animals respectively. NBD herds, in particular, are almost exactly 50 percent larger than the average of URD, MID, and WD herds. Four of the five largest herds sampled throughout the country were among the 13 herds randomly chosen in the NBD. The sample was weighted according to the distribution of cattle between Divisions. Thus, the national average in Table 3 represents a weighted average, with the weights given in the first column of Table 1.

Table 3. Average Size of Herd

	Number of Animals		
Division	Female	Male	Total
URD	49.7	29.3	79.0
MID	51.7	20.2	71.9
LRD	66.5	33.1	99.6
NBD	81.5	32.9	114.5
WD	55.8	23.2	79.0
National Average	56.8	25.7	82.5

More uniformity is found in the composition of herds by sex. As a generalization, slightly more than two-thirds of The Gambia's animals are female. From a Divisional perspective, the sole exception is the URD, where only 61.7 percent of the enumerated animals were female.

Composition by Functional Class

Tables 4 and 5 provide greater detail through a disaggregation by functional classification. The data on female animals (Table 4) display considerabel uniformity between Divisions. As a result, the overall composition given for The Gambia can be taken as representative of each Division as well. Slightly over half of all female animals are reproductive females.

The proportion of weaned female calves is 75 percent higher than for suckling female calves. This suggests that the period between weaning and presentation of first calf may be considerably longer than that between birth and weaning. Yet weaning was reported to be almost always accomplished by the cow and not at the herder's initiative. Weaning occurs generally between 1 and 2 years of age. If the above finding is sustained, it suggests that females reach the relatively old age of three or more before bearing a calf.

These tentative conclusions suggest two points at which herd management could achieve higher productivity. First, by weaning calves earlier, calving intervals could possibly be shortened. Second, better nutrition and disease management could reduce the age of first calving, perhaps by as much as a year.

Table 5 presents similar data for male animals, by functional class. In contrast to female cattle, substantial variation occurs between Divisions. Of possible significance is the higher percentage of adults classified as plow oxen in the URD and LRD.

Inter-Division variation in the relative proportions of suckling and weaned calves and plow oxen remains to be explained by further investigations. The proportions of castrated males and

Table 4. Percentage Composition of Female Animals by Functional Class

Female Functional Classes	Region					
	URD	MID	LRD	NBD	WD	Gambia
Suckling Calf	18.6	18.0	16.9	17.4	14.2	17.3
Weaned Calf	29.7	29.7	29.1	30.7	33.6	30.4
1st Calf Cows						
w/calf	11.8	10.7	8.8	10.8	9.5	10.7
w/o calf	5.5	6.1	6.4	6.8	8.1	6.4
Mature Cows[a]						
w/calf	25.8	24.1	25.0	23.3	19.6	23.8
w/o calf	8.5	11.1	13.7	10.8	14.7	11.2
Too Old Cows[b]	0.0	0.3	0.0	0.2	0.3	0.2
All Calves	48.3	47.7	46.0	48.1	47.8	47.7
Reproductive Cows	51.6	52.0	53.9	51.7	51.9	52.1

[a]Cows which have had more than one calf.
[b]Cows which appeared "obviously too old" to reproduce.

Table 5. Percentage Composition of Male Animals by Functional Class

Male Functional Classes	Region					
	URD	MID	LRD	NBD	WD	Gambia
Suckling Calf	31.5	42.9	33.2	41.1	36.0	37.2
Weaned Calf	30.1	29.1	34.3	30.6	41.4	31.9
Castrated Males[a]	5.3	6.4	5.3	7.0	6.5	6.1
Plow Oxen[b]	27.3	13.9	22.3	15.9	10.8	18.7
Service Bull[c]	5.7	7.7	4.9	5.4	5.4	6.1
All Calves	61.6	72.0	62.5	71.7	77.4	68.1

[a]Castrated animals not used for working.
[b]Male animals primarily used for work and not necessarily castrated.
[c]Used primarily or exclusively for reproduction.

service bulls is relatively constant, and well represented by the national figures.

An interesting conclusion arises from comparing the percentages of calves in male and female portions of the population. Calves comprise 68 and 48 percent of the populations of each sex respectively. Given that adulthood, as defined for male animals, must include a considerably longer span of years than does the "calf" status, it is apparent that only a small portion of the weaned calf cohort is retained for any of the adult male categories. The opposite conclusion must be reached for females. These differences are readily apparent when one examines the actual number of animals enumerated in the survey.

	Female	Male
Suckling Calves	1004	977
Weaned Calves	1752	838
Adults (all classes)	3025	809

The relationship between sexes for suckling calves is about what one would expect based on purely biological factors. It was concluded above that the "weaned calf" period was longer than the suckling period. Female animal numbers support this hypothesis yet the number of surviving male calves declines. The number of adult males is smaller yet, despite the extended length of this phase. One must conclude that there is a substantial disappearance of male animals during the period after weaning and before adulthood. The most probable cause is believed to be slaughter for village level consumption and sales to local markets.

One other important conclusion arises from these data. Mature males account for only 9.6 percent (809 of 8415) of the sample. Of these more than half are classified as plow oxen. Thus this survey refutes the frequent assertion that the national herd could be substantially reduced by removing surplus or "unproductive" males. This point is developed more fully below.

Composition by Dental Structure

All 8415 sampled animals were examined and their dentition classified into one of twelve "dental age" classes.[2] Table 6A and 6B tabulate the results for females and males respectively. There is little regional variation in dental ages for females and the national averages are representative. Among males the URD and LRD herds seem to differ somewhat from other Divisions by having a lower percentage of dental classes D-1 through D-3 and a higher percentage of animals in D-6 through D-10. In other words male animals in these two Divisions are somewhat older than elsewhere, confirming the observation made from Table 5 that these two Divisions have a higher proportion of draft oxen.

Table 6A. Composition of the Female Herd by Dental Structure (in percent of animals within each Division)

Dental Age Class[a]	Region					
	URD	MID	LRD	NBD	WD	The Gambia
D-1	15.8	15.0	12.6	14.2	13.3	14.6
D-2	9.2	10.2	13.4	11.0	8.0	10.1
D-3	6.1	5.2	5.5	4.6	7.3	5.7
D-4	5.7	6.2	5.5	6.3	4.6	5.8
D-5	6.7	7.8	5.1	9.5	7.8	7.6
D-6	9.9	9.6	9.2	7.4	5.6	8.6
D-7	11.1	12.4	14.8	11.7	14.1	12.4
D-8	6.7	6.2	6.4	9.2	8.4	7.2
D-9	8.2	9.8	9.7	10.5	8.4	9.3
D-10	14.5	13.7	14.3	11.6	15.8	13.9
D-11	5.4	3.0	2.6	2.7	3.6	3.5
D-12	0.9	1.0	0.9	1.2	3.1	1.3

[a]Dental age classes are defined as follows: D-1, milk tooth rubbing plane ≤ half the tongue plane; D-2, milk took rubbing plane > half the tongue plane; D-3, one or both medial milk teeth replaced by permanent teeth; D-4, one or both medio-lateral teeth replaced; D-5, one or both latero-medial teeth replaced; D-6, one or both lateral milk teeth are replaced; D-7, the rubbing plane of the medial permanent teeth covers half or more of the tongue plane; D-8, rubbing plane of lateral permanent teeth covers half or more of the tongue plane; D-9, rubbing plane of the medial teeth covers the tongue plane; D-10, rubbing plane covers the whole tongue plane and the shape is square or round; D-11, rubbing plane is odd or oval shaped; D-12, four or more teeth are gone.

[2]Defined in the footnote to Table 6-A.

Table 6B. Composition of the Male Herd by Dental Structure (in percent of animals within each Division)

Dental Age Class[a]	Region					
	URD	MID	LRD	NBD	WD	The Gambia
D-1	24.4	38.6	27.2	36.2	35.3	32.1
D-2	14.4	23.0	23.8	22.2	20.8	20.0
D-3	10.5	7.2	6.8	11.0	13.1	9.6
D-4	9.9	10.2	5.8	7.3	5.[illegible]	8.6
D-5	8.8	6.6	6.0	10.3	8.0	8.0
D-6	11.9	5.5	11.7	5.1	5.9	8.2
D-7	9.5	5.4	10.6	4.9	5.0	7.1
D-8	4.7	1.5	4.1	1.7	3.0	3.0
D-9	3.4	1.4	3.0	1.0	2.4	2.3
D-10	1.9	0.4	0.8	0.2	0.3	0.9
D-11	0.4	0.1	0.0	0.0	0.3	0.2
D-12	0.1	0.0	0.4	0.0	0.0	0.1

[a]Defined in Table 6A.

Of interest is the age associated with each dental classification. Herders were asked to list the ages of all animals under their care. Most adult animals were assigned an age in years while calves were normally listed in months. For comparability all ages were converted to months. Table 7 presents the results. There is little difference between male and female dentition-age patterns. Those differences that do appear are in the older age classes. They may reflect less accurate recall of actual ages and/or the very small number of older males sampled rather than real differences in dentition patterns between the sexes.

Population Dynamics

The survey recorded, to the extent of the respondents' ability to recall them, all of the changes in each herd occurring during the twelve months prior to the day of enumeration. While there are potential difficulties with this method, particularly the accuracy of recall, the responses do permit an approximation

of the various parameters that determine changes in herd size and composition over time.

Table 7. Relationship Between Dental Structure and Reported Ages

Dental Age Class[a]	Females Months of Age	Males Months of Age
D-1	7.4	4.4
D-2	19.2	19.1
D-3	29.4	30.9
D-4	42.3	43.4
D-5	51.4	52.4
D-6	62.2	63.1
D-7	76.4	73.7
D-8	87.9	85.7
D-9	97.3	97.4
D-10	111.8	107.2
D-11	131.6	99.0
D-12	140.7	120.0

[a]Defined in Table 6-A.

Calving rate was estimated as follows:

$$\text{Calving Rate} = \frac{\text{Number of live births in 1 year}}{\text{Number of reproductive cows}}$$

For these calculations the number of "reproductive cows" was taken as the sum of all cows which had calved at least once, minus those classified as "obviously too old" to calve. With the survey method used it was not possible to determine accurately those females which had reached physiological maturity and were thus "reproductive" but had not yet bred. Nor were those animals identified which might have been in their first pregnancy. Thus, the denominator (reproductive cows) is probably somewhat underestimated and the true calving rate overestimated proportionately. This should not, however, bias the population model developed below since it uses a consistent definition of reproductive females throughout.

Calving rate, nationwide, was calculated as 67.36 percent. Calving interval, defined as the reciprocal of the calving rate, was estimated at 1.48 years. Modern husbandry systems, even those based on open grazing, achieve much closer to 1.0 for both parameters. This suggests that considerable potential exists for

increasing the number of calves born annually, provided that significant improvements are made in nutrition and disease factors which now suppress reproductivity.

Calf mortality was defined as:

$$\text{Calf mortality} = \frac{\text{Calves under 1 year old that died during year}}{\text{Total calves born during year}}$$

By this measure, calf mortality was estimated at 15.6 percent. This figure could be reduced by better management, however, this level of calf mortality is not severe by African standards. Female calves had a slightly lower mortality rate than males but the difference was not statistically significant.

Data were also collected on herd alterations from all sources other than births. These are summarized in Table 8. Sales and death losses predominate. A portion of the sales are offset by purchases. We assume below that the difference goes for slaughter largely by local town and village butcheries. Therefore, the difference (sales minus purchases) is considered as offtake resulting in a reduction to the herd. Similarly, a small number of animals were given as gifts while none were recorded as being received as gifts. It is therefore assumed that those given away were for ceremonial and other uses which resulted in slaughter and that the reduction in numbers resulting from the gift was not offset by corresponding additions to the herds of the recipients. Animals exchanged represent no net change in total herd size or composition although obviously there must be changes affecting individual cattle owners.

Table 8. Sources of Herd Alterations other than Births (data are percent of all animals of same sex).

Item	Male	Female	Item	Male	Female
Sold	9.8	3.6	Slaughtered	3.3	0.9
Purchased	0.9	1.4	Died	4.4	5.2
Given Away	1.3	0.2	Lost	1.8	0.7
Received	0.0	0.0	Exchanged	0.2	0.2

While the differences are not great, Table 8 identifies a propensity among cattle owners to sell, give away or slaughter

males, buy females and slaughter males. Those observations suggest that Gambian herd managers are concentrating the offtake among male animals while retaining females. If herds are, in fact, managed according to this guideline, it would be consistent with the present sex composition of the herd plus the finding that there are really very few adult males within The Gambia and that those which do exist are generally identified with a specific use.

These figures permit estimating a simple population model for the Gambian herd. Figure 1 presents such a model for a representative group for 1000 animals.

Total cattle numbers grew 7.3 percent during the year covered by the survey. This growth occurred despite offtake of 13.5 percent of the males and 3.4 percent of females, representing the excess of sales and slaughter over purchases and gifts. Offtake was distributed among the sexes in a ratio very close to that derived from surviving calves. Some 52.0 percent of the surviving calves (additions to the herd) were female; 51.2 percent of the herd deletions were female. Thus, the picture obtained for the year of the survey is one of a rapidly growing herd but with growth managed to maintain stability within the herd's internal structure. Over the year the proportion of females in the total herd changed only from 68.6 to 67.6 percent.

Herd owners/managers can adjust the sales, purchases, gift giving and local slaughter components of the model. In Figure 1, three of these (sales, purchases, gifts) are combined into one term; net exchanges. Presumably these factors are varied to compensate for variations in natural mortality of calves or adult animals or to restructure the herd as desired.

Figure 1 reinforces the conclusion reached earlier regarding the disposition of male animals. The number of suckling and weaned calves (ages 0-3) far exceeds the number of adults (ages 3-12±). Apparently most of the young male animals are not retained for one of the uses defined for adults. Therefore, one must expect a substantial portion of the male offtake to be composed of older weaned calves. Given the nature of the data and the absence

Figure 1. Representative Cattle Herd Composition and Annual Changes: Average Relationships for The Gambia, 1980-81

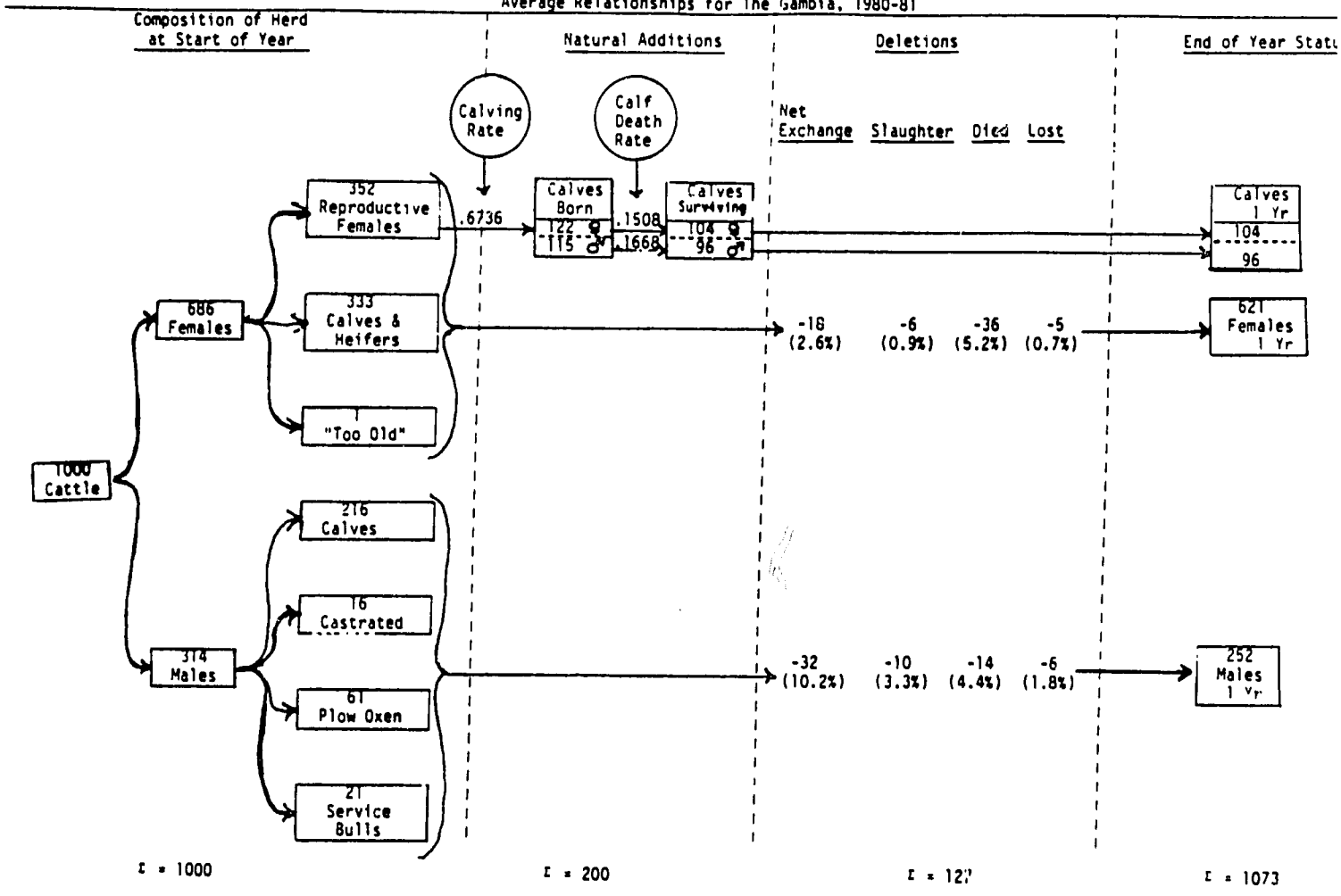

of a few key bits of information this must remain a tentative conclusion. However, if substantiated by further inquiry, this phenomenon would suggest a supply of weaner calves which are now slaughtered locally but would be suitable for small feeding enterprises aimed at supplying the urban market with fed beef. Such a feeding industry would provide the beginnings of a commercial demand for maize grain in The Gambia and contribute to strengthening the commercial linkages between the crops and livestock subsectors. A feeding industry, if established, would create additional commercial demand for feeder calves and thus contribute to government's objective of getting farmers to view cattle as a "crop" or commercial venture rather than a social or security activity.

The relationships depicted in Figure 1 are weighted averages developed for The Gambia as a whole. The structure of the survey permits examining these same relationships as they might differ based on the following stratifications:

a. administrative Divisions

b. tribe of owner

c. tribe of herder

Tables 9A-C below present these differentials. Of interest to those concerned with herd management are the differences observed in calving rates and calf mortality. Substantial variation is found in each stratification. Regionally, calf mortality is highest in the Western Division and the Lower River Division with observed figures of nearly 25 percent. This statistic declines as one moves to other Divisions with a low recorded of 10 percent in the Upper River Division. Similar distinctions occur in the other stratifications with the most significant ones apparent when isolated by tribe of owner.

Taken in combination, natural changes plus managed changes result in a total net change for the herd. All stratifications showed a net growth in numbers. The most substantial differences appear in the regional classification with the annual growth rate

Table 9-A. Cattle Population Parameters Differentiated by Division[a]

Item	National Averages	Division				
		URD	MID	LRD	NBD	WD
Percent Females	68.6	61.7	71.9	66.8	71.2	63.0
Percent Reproductive Females	35.2	31.6	37.3	36.1	36.8	32.4
Calving Rates	67.4	62.7	68.3	69.3	70.3	67.6
Calf Mortality	15.6	10.3	12.2	23.6	18.1	24.0
Natural Additions	20.0	17.8	22.4	19.1	21.2	16.6
Natural Deletions:						
Death	5.0	3.8	8.3	3.4	3.0	3.0
Lost	1.1	0.8	1.0	0.4	0.05	2.8
Management Changes:						
Sold	5.6	5.5	7.5	3.4	3.7	4.8
Purchased	1.1	0.5	1.5	1.0	1.7	0.9
Slaughtered	1.6	0.8	2.5	2.5	1.1	1.3
Given Away	0.5	0.3	1.0	0.5	0.1	0.6
Exchanges	0.2	0.1	0.3	0.3	0.05	0.6
Net Change[b]	7.3	6.9	3.6	10.0	14.9	5.1

[a]All figures express percentages of the total herd except for calving rates (% of reproductive females) and calf mortality (% of calves born).

[b]Natural additions - natural deletions - sales + purchases-salughter - given away. Exchanged animals are ignored.

Table 9-B. Cattle Population Parameters Differentiated by Tribe of Owner[a]

Item	National Averages	Owner's Tribe				
		Fula	Mandinka	Serehuli	Wollof	Jola
Percent Females	68.6	69.6	69.0	66.1	69.5	68.7
Percent Reproductive Females	35.2	35.6	35.5	35.1	37.4	36.4
Calf Rates	67.4	71.2	63.3	59.8	70.0	72.3
Calf Mortality	15.6	10.4	16.9	19.8	15.1	26.2
Natural Additions	20.0	22.7	18.7	16.8	22.2	19.4
Natural Deletions:						
Death	5.0	6.8	3.7	4.6	5.1	4.0
Loss	1.1	0.6	0.7	1.1	1.0	3.9
Managed Changes:						
Sold	5.6	7.2	4.3	2.5	7.5	5.5
Bought	1.1	1.0	1.5	0.2	1.6	0.4
Slaughtered	1.6	1.4	1.9	1.4	1.9	0.9
Given Away	0.5	0.8	0.2	0.6	1.1	0.0
Exchanges	0.2	0.1	0.1	0.1	0.3	1.0
Net Change[b]	+7.3	+6.8	+9.5	+6.9	+7.3	+5.6

[a]All figures express percentages of the total herd except for calving rates (% of reproductive females) and calf mortality (% of live births).

[b]Natural additions - natural deletions - sales + purchases-slaughter - given away. Exchanged animals are ignored.

Table 9-C. Cattle Population Parameters Differentiated by Tribe of Herder[a]

Item	Averages	Herder's Tribe[c]			
		Fula	Mandinka	Wolloof	Jola
Percent Females	68.6	68.8	67.8	72.2	65.9
Percent Reproductive Females	35.2	35.9	34.9	37.2	35.0
Calving Rates	67.4	68.4	65.2	59.9	66.7
Calf Mortality	15.6	15.3	17.2	17.4	25.0
Natural Additions	20.0	20.8	18.8	18.4	17.5
Natural Deletions:					
Death	5.0	4.7	5.5	6.1	7.2
Lost	1.1	1.0	1.1	0.9	0.9
Managed Changes:					
Sold	5.6	5.3	6.3	7.0	5.8
Bought	1.1	0.8	1.5	3.3	1.3
Slaughtered	1.6	1.3	2.6	2.2	1.3
Given Away	0.5	0.5	0.3	2.2	0.0
Exchanged	0.2	0.2	0.1	0.5	0.0
Net Change[b]	+7.3	+8.8	+4.6	+3.3	+3.6

[a]All figures express percentages of the total herd except for calving rates (% of reproductive females) and calf mortality (% of live births).

[b]Natural additions - natural deletions - sales + purchases-slaughter - given away. Exchanged animals are ignored.

[c]No cases of Serehuli herders were recorded in the sample.

in the North Bank Division exceeding that in the MacCarthy Island Division by a multiple of four.

Among the various tribal groups the Fulani achieve modest distinction by managing their herds to obtain calving rates higher than the national average and calf mortality rates lower than average. Data in Table 9-C indicate that death losses of adult animals are lowest among animals with a Fulani herder and that the annual rate of overall growth is highest in this circumstance as well.

An additional observation regarding present herd management is obtained from the comparison of Tables 4 and 9-A. Cows with unweaned calves were identified in Table 4. Presumably cows would cease to be classified as "with calf" if the calf dies, is weaned or is sold or slaughtered. Calf mortality plus differences in calving rate are identified in Table 9. The remaining reasons for a calf to leave his mother's side (weaning, sale, slaughter) are potentially susceptible to the influence of management.

Table 10 combines calculations made from Table 4 and 9-A. A small simplifying assumption is made; that there is no sale, slaughter or weaning at less than one year of age. Therefore, the "natural additions" from Table 9 indicate the proportion of cows with calves born in the previous year. Only a single instance of twins was noted in the sample and one of these two calves was still born. Subtracting these figures from the proportion of cows with calves of all ages yields an estimate of the number of cows with unweaned calves more than one year old. Three Divisions approximate the national average. However, the Western Division has substantially fewer while the Upper River Division has substantially more. This suggests that the combination of weaning and calf offtake operates on average to remove calves from the mother earlier in the WD and later in the URD. Since almost all weaning was done by the cow and not the herder, most of this difference would appear to result from different offtake practices. The longer suckling period in the URD may be the reason for lower calving rates noted in Table 9-A for this

Division and in Table 9-B for herds owned by the Serehuli in particular, most of which are located in the URD.

Table 10. Indications of Differences in Weaning and/or Offtake of Calves (data in percent of reproductive cows)

Division	Cows with Calves of < 1 Year	Total Cows with Calves	Cows with Calves of > 1 Year
URD	56.3	72.9	16.6
MID	60.1	66.9	6.8
LRD	52.9	62.7	9.8
NBD	57.6	66.0	8.4
WD	51.2	56.1	4.9
Gambia	56.8	66.2	9.4

Aggregate Considerations

Conventional wisdom places the Gambian cattle herd at 300,000-330,000 based on data from the late 1970s. If the seven percent growth rate estimated for the survey year has been maintained for long, it is possible that the herd could, in fact, be considerably larger. Even though the total size of, say, 330,000 is only a rough approximation at this time, it can be combined with the relationships in Figure 1 to give an approximate view of several magnitudes characterizing the national cattle herd.

Assuming 330,000 head, the total herd would be composed as follows:[3]

116,160 reproductive cows
109,890 female calves and heifers
330 old cows
71,280 male calves
20,130 plow oxen
6,930 service bulls
5,280 castrated males

[3]Relationships are from Figure 1 multiplied by 330.

The herd produces approximately 66,000 calves annually that survive until the age of one year. Of the survivors 34,320 are female. An additional 12,250 calves are born but do not survive their first year of life.

Offtake, viewed as the total of net sales plus slaughter, totals 21,780 animals. This figure is consistent with the conventional wisdom that between 20-25,000 animals are slaughtered annually, mostly in villages or local butcheries. An additional 16,500 adult animals die each year. It is not known what disposal, if any, is made of these animals.

Livestock development programs in The Gambia seek to increase incomes generated by the sector through increased marketings. Simultaneously, a reduction in the size of the herd would remove pressure on grazing resources. It has been suggested that it might be possible to achieve both objectives by removing surplus male animals. But, the data in this survey do <u>not</u> support the belief that there are surplus males for removal. First, there is one service bull for every 16.8 cows. While this is slightly more bulls than required in range herds of the Western United States (1:20-25 cows), it is quite possible that ecological conditions in the Gambian bush require the ratio recorded. Adjusting the number of service bulls to achieve the U.S. ratio would only remove 1100-2300 animals.

The herd contains one pair of plow oxen for each 16+ hectares of cultivated land. In Pakistan one pair of large, healthy bullocks is considered adequate to till 5 hectares on a family farm. Thus, by this rough comparison The Gambia is probably quite deficient in animal draft power for tillage. One would, therefore, not seek to reduce cattle numbers by removing plow oxen.

There is little evidence on what the intended use is for castrated adult males. It is our conjecture that most are in training as plow oxen and another small group is intended for ceremonial slaughter at major events such as weddings. In any event their numbers are small and do not offer much scope for

reducing the total herd by culling these animals. Castrated male adult cattle constitute only 1.9 percent of all Gambian cattle.

Thus, it is apparent that culling of adult males would achieve only minor herd reductions, but a reduction might create undesirable consequences at other points in the farming system.

Despite this conclusion, there is considerable scope for increasing offtake above the 21,780 animals recorded in the survey. During the survey year the herd grew by 7.3 percent, or approximately 24,090 animals. If the environment is truly stressed through excessive cattle numbers, then the objective of holding numbers constant must be given serious policy consideration as, at least, a minimum strategy. If all the net growth in herd size were marketed, offtake could be expanded to 45,870 head yearly, or 210 percent of the recorded offtake in the survey year, without changing herd numbers or any of the factors affecting reproduction and survival.

To extend the analysis, improvements are also possible in calving rate, calf mortality and death losses among adults. For the sake of illustration we could assume the following as modest goals for a 10-year livestock sector improvement program:

a. Calving rate increases to .80, a twenty percent improvement from present levels.

b. Calf mortality is reduced by one-third to a national aggregate figure of .1041.

c. Death loss among adults declines from five percent to 3.5 percent.

If these changes were achieved within the present herd, and all annual additions were sold or slaughtered in the interests of maintaining a stable population, offtake would rise to 68,000 animals annually.[4] For this illustration we have not taken into

---

[4]Current sales are 5.0 percent and slaughter 1.6 percent. To this is added the 7.3 percent net growth plus 1.5 percent from reduced adult mortality and 5.2 percent from higher births and survival rates. Offtake could, thus, be 20.6 percent compared to the 6.6 percent recorded by the survey.

account any changes toward younger age of first calving which could also be achieved.

One of the preconditions for improved calving, and calf and adult survival is believed to be better nutrition. And to achieve this, it may be necessary to reduce total cattle numbers substantially even while forage supply is increased. It is important to note that if the herd were reduced by a full one-third to a level of 220,000 and the changes listed in a-c above were to occur, an annual offtake of over 45,300 animals is possible. This figure is almost identical to the 45,870 which would have occurred if only all net additions to the present herd had been marketed for slaughter. Thus, today's potential output, which is more than twice today's actual output, could be achieved with two-thirds of present cattle numbers and only modest improvements in their health and reproductive performance.

A calving rate of .80 and calf mortality of .10 may represent the best that can be achieved in perhaps a decade of intensive program efforts. Additional progress, beyond that discussed above could be made in preventing the deaths and losses of adult cattle. If these two factors were eliminated completely and the same number of animals moved to either slaughter or sale, offtake would increase by an additional 10,000 animals annually, even from a total herd of only 220,000 head.

Beyond these improvements priority must be placed on increasing productivity per animal unit rather than increasing the number of marketed animals. Daily milk production and carcass weight of slaughtered cattle are both believed to be quite low and represent a chance for significant output increases without increasing cattle numbers.

Summary

Even though some of the conclusions reached remain tentative, the data recorded during the survey sketch an overview of Gambian livestock management. Farmers apparently strive to maintain a

particular herd structure which is about two-thirds female. Slightly less than ten percent of the herd is male, most of which are associated with specifically identified roles int he farming system. This balance is evidently maintained by adjusting sales, purchases, gift giving and slaughter so that when combined with natural events (births, deaths, losses) a fairly stable herd structure is maintained.

When stratified by Division, there were few major differences in herd composition. This suggests that the operative management criteria (whatever they are) are fairly uniformly understood and applied throughout the country. Further research designed to specifically identify management norms as perceived by Gambian farmers seems warranted.

A population model was developed which isolates the major herd changes occurring during the survey year. Total numbers grew rapidly, adding 7.3 percent in twelve months. The model identifies significant opportunities for improving herd output. These include increases in calving rate, decreased calf mortality, reduced losses from death and disappearance, and earlier age of first calving.

Using modest assumptions regarding the impact of possible livestock improvement programs it was shown that marketed offtake could be doubled at the same time that herd numbers were reduced by one-third. Two major development objectives have been frequently discussed for the Gambian livestock sector. These are 1) increasing the commercial incomes derived from cattle and 2) reducing cattle numbers to stabilize and restore the rangeland. This study indicates that, in broad terms, these two objectives are compatible rather than conflicting.