PN-AAU-201
H317 8

Proceedings of Workshop on
RESOURCE-EFFICIENT FARMING METHODS FOR

TANZANIA

MAY 16–20, 1983

Faculty of Agriculture, Forestry and Veterinary Science
University of Dar es Salaam, Morogoro, Tanzania

Rodale Press, Inc.
Emmaus, PA 18049

Published in the United States of America
by Rodale Press Inc.

Library of Congress
Cataloging in Publication Data

Workshop on Resource-efficient Farming Methods for Tanzania (1983: Faculty of Agriculture, Forestry, and Veterinary Science, University of Dar es Salaam)
Proceedings of Workshop on Resource-efficient Farming Methods for Tanzania, May 16–20, 1983, Faculty of Agriculture, Forestry, and Veterinary Science, University of Dar es Salaam, Morogoro, Tanzania.

Includes bibliographies.
1. Organic farming—Tanzania—Congresses.
I. Semoka, J. M. R. II. University of Dar es Salaam. Faculty of Agriculture, Forestry, and Veterinary Science. III. Title. IV. Title: Resource-efficient Farming Methods for Tanzania.
S605.5.W59 1983 631.5'84'09678 83-17827

ISBN 0-87857-490-5

Funding for the Workshop on Resource-Efficient Farming Methods for Tanzania, technical assistance from Rodale Press Inc. and for publication of the proceedings was in part provided by the United States Agency for International Development under contract to Rodale Press Inc. The views and articles expressed herein are those of the authors and editors and do not imply approval or policy statements by USAID.

EDITORIAL COMMITTEE

Dr. J.M.R. Semoka

Dr. F.M. Shao

Dr. R.R Harwood

Dr. W.C. Liebhardt

ORGANIZING COMMITTEE

Dr. B.J. Ndunguru (chairman) UDSM

Dr. J.M.R. Semoka (ex-secretary) UDSM

Dr. D. Giltrow (member) UDSM

Dr. C.L. Keswani (member) UDSM

Dr. F.M. Shao (member) TARO

Mr. S. Muro (member) KILIMO

Dr. R.R. Harwood (member) RODALE

Managing Editor: Michael Brusko

Art Director: Ronald L. Bortz

Associate Art Director: John Lotte

CONTENTS

FOREWORD 7

OPENING REMARKS

Mr. Robert Rodale,
Chairman of the Board, Rodale Press Inc.
..... 9

His Excellency Mr. David Miller,
U.S. Ambassador to Tanzania 11

OPENING ADDRESS 14

His Excellency Mwalimu Julius K. Nyerere,
President of the United Republic of Tanzania

CLOSING SPEECH ON
FINAL DAY OF WORKSHOP 19

ROLE OF WOMEN IN AGRICULTURE
Honorable Mrs. Gertrude Mongella, M.P.,
Minister of State, Prime Minister's Office

I. Workshop Overview and Purpose

IMPORTANCE OF RESOURCE
REGENERATION 20

R. Rodale

INTERNATIONAL OVERVIEW OF
REGENERATIVE AGRICULTURE
..... 24

R.R. Harwood

ORGANIC FARMING
IN TANZANIA 36

J.N.R. Kasembe, J.M.R. Semoka and
J.K. Samki

ROLE OF LIVESTOCK
IN ORGANIC FARMING 42

M.L. Kyomo and A. Chaguia

II. Composting and Compost Use

BIOLOGICAL ASPECTS
OF COMPOSTING 47

A.L. Borowski and W.C. Liebhardt

METHODS OF
COMPOST PREPARATION 58

P.B. Ngeze, N.A. Mnzava and J. Ruttle

AGRONOMIC ASPECTS OF
MANURE AND COMPOST USE 64

J.M.R. Semoka, B.J. Ndunguru and W.C.
Liebhardt

MANURE AND COMPOST
HANDLING IN TANZANIA 72

E.M. Ngaiza

III. Nitrogen Self-Sufficiency

NITROGEN
SELF-SUFFICIENCY 75

W.C. Liebhardt

CONTRIBUTION OF BIOLOGICAL
NITROGEN FIXATION TO THE
NITROGEN SUPPLY OF SOILS 86

M.S. Chowdhury, B.J. Ndunguru
and L.L. Lulandalla

IV. Integrated Crop Protection

PLANT DISEASE
MANAGEMENT 95

C.L. Keswani, J.M. Teri and F.M. Shao

WEED CONTROL 99

A.N. Minjas and R.K. Jana

ALTERNATIVES TO THE
CONVENTIONAL USE
OF CHEMICAL PESTICIDES 104

A.K. Karel, M.E. Quentin and D. Matthews

V. Implications of Resource-Efficient Farming Methods

NATIONAL IMPLICATIONS
OF RESOURCE-EFFICIENT
FARMING METHODS 112

M. Gabel and A. Heiland

PROGRAM OF ACTION 122

PHOTOS OF FIELD
DEMONSTRATIONS 126

FOREWORD

Worldwide experiences in agricultural development over the past two decades provide a wealth of understanding and direction for the future. Those experiences, combined with our present heightened awareness of worldwide and regional resource limitations, environmental fragility and demands for equity for rural people have led to a restatement of agricultural development directions. Those directions are articulated in the March 1983 document "The National Agricultural Policy."

To meet national needs in each of the areas mentioned, our agricultural development policy must be based on efficient use of available resources. That use will permit a higher degree of self-reliance, reducing our vulnerability to fluctuating world supplies and prices of manufactured inputs. We wish to emphasize that we are not advocating isolationism. We are simply stating that we will provide for ourselves first and resort to foreign materials and aid as a supplement to our own resources and efforts.

With this attitude and policy, it is fitting that the seminar, "Resource-Efficient Farming Methods for Tanzania," was held. Planning for the seminar involved participation by the Ministry of Agriculture, TARO, the University of Dar es Salaam, Rodale Press and the USAID. The Ministries of Education, Industry, Agriculture, Natural Resources and Livestock, as well as the CCM, UWT and numerous foreign assistance groups participated in the seminar. The technologies discussed, centering on agricultural nutrient conservation, nitrogen self-reliance, non-chemical pest and disease management, and increased use of animal power have been identified as key elements for improving productivity and use of natural resources. They are especially relevant to improvement of the well-being and productivity of the millions of small farmers who constitute the majority of our people and are responsible for the greatest part of our productivity.

We are extremely grateful to President Mwalimu Julius K. Nyerere for his initiative, support and participation in the workshop. The Secretary General of CCM, Hon. Mr. Rashidi M. Kawawa, M.P., has given his full endorsement and support by his presence. The support of USAID and Rodale Press is gratefully acknowledged. In addition, the tireless efforts of the organizing committee are greatly appreciated. Finally, the enormous success of the conference is due in no small part to the willing and enthusiastic participation of its many contributors and participants.

We feel that the ideas presented and the suggestions for implementation of these resource-efficient technologies will provide a blueprint for progress in our agriculture for the years ahead. We sincerely hope that other nations might benefit from our deliberations and experience.

John B. Machunda
Minister of Agriculture
United Republic of Tanzania

OPENING REMARKS TO THE WORKSHOP ON RESOURCE-EFFICIENT FARMING METHODS

Mr. Robert Rodale

CHAIRMAN OF THE BOARD
RODALE PRESS INC.

Thank you very much. All of us who have come here from the Rodale Research Center are greatly honored by this opportunity. We are especially thankful that President Nyerere has made possible this chance to spend time with you, to see your country and to take part in discussions about your country's agriculture.

I just want to introduce the other members of our group—Medard Gabel, Bill Liebhardt, Dick Harwood and John Haberern. I'm sure that they join with me in expressing our appreciation to you.

The primary focus of this workshop is on organic matter and manure, which I know we all recognize to be extremely important. I see in the organic resources of a country much more than just fertility. I'm going to have a chance later to give a longer paper on this subject, but I've given the name regenerative agriculture to what we have been working on for many years. The phrase regenerative agriculture includes organic farming, but it embodies in it a much larger idea, particularly the idea of self-reliance. It's people, but it's closing the nutrient loops around them. By using resources close at hand, they become able to support themselves with fewer outside resources. This interest in self-reliance has become extremely popular and important in the United States.

One of the things I want to bring to you here is the awareness that things are changing in the United States very rapidly. The farmers there are facing many of the same problems that you are facing here, of course on a much different scale. But there is tremendous interest in regeneration and self-reliance and using fewer inputs and buying less. In effect, importing less from other areas.

There's also a greater interest in alternatives. We used to have a vision that there was just one way to farm in a country. But in America today, there are springing up many different methods. And these have been called alternative methods. But I think that word alternative needs examination, because in my vision, I see what is now the alternative as becoming the main method of farming. In the long-term future of the United States—and I think the world—the very efficient use of organic and other nutrient and human resources in a closed loop is going to become the main method. And that's why I've given it this word regenerative, because I think it embodies the spirit of the idea and also expresses that it's not an alternative. It's not something that we do because the main method isn't good enough. It is really the best method.

I just want to make one other comment that this is really a historic occasion. It's historic in two ways. One, for the organic method, which really is about 80 or 90 years old. Rodale Press was started by my father and I've been working for him for 32 years. He died about 12 years ago. Since then, I've been carrying on. My father was a link between earlier pioneers: Franklin Hyde King, who wrote the book "Farmers of Forty

Centuries," and especially Sir Albert Howard, who developed the Indore method of composting in India.

So what's happening today—it's really a very historic occasion. I'm sure that it's historic for Tanzania, because no country has ever done what you're doing here. And I think that at the end of this workshop, the product will become an example for many other countries, and even for the United States. Thank you.

OPENING REMARKS TO THE WORKSHOP ON RESOURCE-EFFICIENT FARMING METHODS

HIS EXCELLENCY

Mr. David Miller

U.S. AMBASSADOR
TO TANZANIA

Mr. President, it's a great honor to share a platform with you today and to receive so many good friends here.

All of the speakers, including the President himself, bring personal qualifications to discuss agricultural issues, so I found myself wondering what I might add in these brief remarks.

It struck me that you might be interested in learning how this seminar came about, why I believe it makes good sense, and what the United States government has been doing in Tanzania to support agriculture.

First, let me review how we got here today. It's somewhat of a humorous story—I was glad to hear you chuckle there, because there will be some more laughs in this story.

It began, innocently enough, a number of years ago when my wife, Mrs. Miller, began a personal investigation of what I'm still calling alternative agricultural technology. She, like a number of other Americans, began to question the long-run wisdom of our increasingly capital- and chemical-intensive agriculture.

There's a growing group of people in the United States who are wondering if we ought not to spend more time working with nature rather than trying to overwhelm it. And in her investigation, she came across Rodale Farms, Rodale Press, and she decided—as many other people did—that this was really the outstanding center for alternative agricultural technology in the States.

So to get on with the story, about two years ago, Mrs. Miller and I found out we were going to come to Tanzania. And before she let me get on the plane, she said that we must go visit Rodale Farms. I must say I was somewhat skeptical, and in fact, I got lost driving up to the farm. But we finally got there—the long way.

It was a wonderful operation. I was very, very impressed. Basically, we spent the day looking at small, but tremendously productive agricultural plots. So I left Rodale convinced that they really had something to offer. But most importantly, I left Rodale carrying a big stack of books in my arm, because Mrs. Miller found out that they had a bookstore there, and she bought virtually every book in the store.

One of them was "The Rodale Guide to Composting." That book cost $12.95, and that's why we're all here today. She read the book—she thought it was pretty good. So she decided she might give it to her good friend, Joan Wicken, who might give it to her good friend, the President. And that's what happened.

Now, we didn't think this was going to result in all of this. And that's where there's really a humorous story which I want to spend just a few minutes on. It involves the President, the Minister, the Ambassador and our AID Director who's sitting out here, Mr. Handly. And the story is what happens when the President decides something should be done.

As the story goes, the Minister was sitting at home one afternoon—he sent his car and driver home—he thought he was through with work when the phone rang. He was told he should show up at the President's house to see the President right away. So, being a good Minister, he got out a piece of paper and began to write down all the ideas he might have to cover with the President. He went to his neighbor, got a ride, and went out not knowing if he was going to be moved to a different job or what the question was going to be. Who knew what would happen?

So he stood in there waiting for the President. The President comes downstairs and he's carrying this book. He looks at the Minister and he said, "You know Mrs. Miller, don't you?"

And the Minister, being a gracious fellow, said, "Well, sure I think I know Mrs. Miller."

And the President said, "Well, it's the American Ambassador's wife."

And the Minister said, "Well, of course."

And the President said, "I've read this book—'The Rodale Guide to Composting.' There's a great deal that's applicable for Tanzania here, and I think we should do something about it. Let's have a seminar."

Well, after a little more conversation, the Minister left there. He went back to his office and he phoned me. The Minister doesn't very often call me, so I paid attention immediately. He got on the line and he said, "You've got to come see me right away."

And I said, "Yes, sir."

And he said, "Bring your AID Director."

And I said, "Yes, sir." And then I said, "Is it really serious?"

And he said, "Yes, sir."

And so I brought my Deputy Chief of Mission, and we all trundled down to the Minister of Agriculture, and that's when the Minister said, "I think we're going to have to do something right away." And as we were leaving the office, he said, "If your wife gives any more books to the President, would you please tell me about it?"

So that's how we got here. Every once in awhile, when I'm at gatherings like this, I like to know how it all happened.

Let me offer you just a few serious thoughts here. First of all, our societies are wrestling with the same problem. In the United States, we are trying to do more with less. We are trying to import fewer expensive oil-based products. We are trying to consume less power per capita. And in the last 10 years, we put a good deal of emphasis, in our environmental programs, on improving the quality of the life of our citizens. So, as we listen to these presentations this week, and learn how to use more efficiently resources and assets that we find around us, you should remember that this is an exercise that all countries are engaged in, even those that are relatively wealthy.

A second fundamental point is that Rodale is not talking about anything radically new. In fact, they will describe some techniques and approaches that were probably used by many Tanzanians in the past—and in fact, are being used right now in many places in the country. The use of composting, crop rotation, of animal power, and so on, are all techniques that have been known to us in bits and pieces.

The wonderful thing about Rodale is, first, they've taken all these techniques and worked them into quite a scientific package to optimize output. And second, they've proved that these techniques can be cost-effective in competition with capital- and chemical-intensive agriculture.

I don't want to get too deeply into agriculture, because I'm liable to embarrass myself. But I would simply like to add a few more words about our AID program here in agriculture.

The primary focus of our AID program in Tanzania since 1970 has been on national institutions in agriculture education and research, with an emphasis on food crops and livestock production. Assistance has been provided to this very college in Morogoro, reactivating the Ministry of Agriculture farmer training wing, strengthening the Faculty of Agriculture's Department of Agricultural Education and Extension, developing seed farms, extending the food crops research program, developing rangelands and water systems, providing tsetse fly control and working directly with the Tanzanian livestock authorities. We have brought in over 1,200 dairy animals to Zanzibar, Mafia, and the Tanzanian mainland.

But through all of this, training has been the cornerstone of our activity. Since 1965, the United States has provided training for more than 1,200 Tanzanians, 900 of them in the agricultural field. And I'm very pleased to say that I think many of them are here in this faculty.

Let me finish my remarks by offering my compliments to the leadership of this fine institution. I've made their acquaintance just about six months ago. We met here twice to discuss this project. I must say, my wife and I were asked a number of tough questions as to what might be accomplished. Nevertheless, our hosts were always very gracious and I think I drank more of their coffee than a reasonable guest should have. But I think they've done a marvelous job and I'd like to express my appreciation to all of you here at the college for doing such a fine job. Thank you very much.

OPENING ADDRESS TO THE WORKSHOP ON RESOURCE-EFFICIENT FARMING METHODS

HIS EXCELLENCY

Mwalimu Julius K. Nyerere

PRESIDENT OF
THE UNITED REPUBLIC
OF TANZANIA

Mr. Ambassador, your excellencies, ladies and gentlemen: You have heard how and why you are here from the Ambassador. I don't have to say it is true, because it is true.

Your excellencies and friends, first of all, I ask your permission to speak sitting down. I'm sure you'll hear me back there. The previous speakers have welcomed you and thanked you for coming. I do endorse their remarks, but I also have some appreciation of my own to express. For this workshop, as you have heard from the Ambassador and the Minister, has been organized at my request. And I want to say thank you to you all, and to all those who have cooperated to make it possible.

I thank the Tanzania experts from the Ministry of Agriculture and from the Tanzania Agricultural Research Organization who have been involved; I thank the Agricultural Faculty of the University of Dar es Salaam; and most of all I wish to thank the Rodale Institute and the American Embassy in Dar es Salaam—particularly the Ambassador and Mrs. Miller. Through the Embassy I naturally thank the American government and people who have met some of the costs involved. For this workshop is an example of the most altruistic kind of assistance; we shall not buy a single extra ton of American fertilizer or machines as a result of this week's activities; Mr. Ambassador: You have arranged a sharing of knowledge and I thank you.

About 80 percent of our people now get their living from the land, and almost all the rest of us are the children of peasant farmers. We often have a plot of our own. I do, and so we do not need to be told that our lives and our future depend on the land, and on its output. But I think we may be guilty of taking the land for granted. Except in a few areas like Kilimanjaro and parts of Kagera region, there is and always has been plenty of land for anyone who wanted to farm. We have used it, and when it began to produce less, we have abandoned a plot and moved elsewhere. If we left it long enough, natural regeneration occurred before we came back to the same plot.

But this practice of shifting agriculture is no longer feasible. Our population is increasing very fast, so there will not always be "plenty of land." Also, we have abandoned the practice of living like permanent refugees in temporary huts scattered throughout the countryside. Now, we live in villages and are gradually building permanent houses; our farms also have to be permanent, and reasonably near where we live. The same piece of soil has to go on for year after year, producing the food and export crops we need for our survival. It is, therefore, vital that we should recognize—and recognize quickly—the need to adapt our traditional farming practices to these new conditions. The soil of Tanzania is a valuable and irreplaceable natural resource which belongs to our descendants, as well as to the present generation, and we have to treat it accordingly.

Growing crops use energy. They take goodness out of the land. But fortunately, we now know that different kinds of crops take different elements from the soil, and some

crops even put particular substances back into it. Without realizing what has happened, and why it has happened, our peasants have traditionally recognized this scientific fact and put it into practice. They knew that after growing maize, or millet, on a plot for a year or two, it became less productive. But they also knew that by leaving that plot to be recaptured by the bush, they could later come back to it and use it for grain a second time. They also knew that the ash from burning crop residue on the plot was a good thing, although few, if any, of our tribal languages had any scientific terms to describe what was happening. By such practices, our peasants were fertilizing the soil, albeit very crudely and inefficiently. Their methods, however, are no longer appropriate, sufficient, or, indeed, possible for us, at least as a program for the medium- and longer-term future.

We now live in villages. We have more and more people to feed from our land. Our farmers now have to feed and support a much larger number of people who do not cultivate for themselves. It is in these new circumstances that we have three tasks to fulfill. First, we have to maintain the existing fertility of our soil. Secondly, we have to improve that fertility. And thirdly, we have to do this economically on the basis of self-reliance, and in a sustainable manner.

The systems of shifting agriculture, of "burning and slashing," and of moving whole communities to new areas, have, for a long time, been recognized as being inefficient or inappropriate for modern needs. When I was at school, in colonial time, we were taught how to make compost and urged that this was a good thing to do. But few of those who went to school in those days ever went back to work on the land; we became clerks or teachers, and tended to regard this knowledge of compost as irrelevant. It may be that, at that time, agricultural officers were urging the use of compost upon the farmers—but the Extension Service did not reach very far. In any case, when our country became independent in 1961, our ambition was to "modernize" our economy. We did not work this out very thoroughly; but it appeared to us that if you wanted a productive agriculture, you had a mechanized agriculture, and you used chemical fertilizers, chemical insecticides, and—to be completely up to date—even herbicides. That, at least, was our vision of American and Canadian agriculture—and we were often told that America is the most productive agricultural country.

As we are a very poor country, we could not move very fast on mechanizing our agriculture, but we did establish some publicly owned commercial farms, and while we had any foreign exchange, we bought tractors and combine harvesters for them. We taught our peasants also to hanker after those machines. As few could afford to buy them, or had the means to get them maintained if they did, our peasants went on working with the hand-hoe. It is only in very recent years that we have begun to put emphasis on what we can do—that is, to move from the hand-hoe to animal-drawn implements.

We seem, looking back, to have acted in a very similar manner on questions relating to feeding the soil. We urged the use of chemical fertilizers; we established a fertilizer factory—heavily dependent on imported components—and we ensured that chemical fertilizers were used in growing certain of our export crops, especially cotton and tobacco. We also adopted a World Bank-assisted maize program, which depended upon using chemical fertilizers. For the rest, we left our peasants to carry on as before. We even stopped teaching compost-making in our schools, regarding this as a discredited and "old-fashioned" technique, which was irrelevant to our future.

The net result has been that in many places, nothing is done at all to refertilize our soil after it has been used, much less to improve the fertility. Our peasants can no longer "move on" after their plot has lost its fertility; they just get less result from their sweat and—legitimately—complain that having told them to use fertilizer, we do not make it available at a price they can afford or when they need it. And sometimes, the continual use

of chemical fertilizers makes the soil very acidic, and thus reduces it productivity. We get less cotton per hectare in Sukumaland now than we used to.

And we also discovered that in Europe, and in America itself, there are now very many people who say that heavy use of chemicals on their soils has done great damage, both to the soil itself and to their water supplies. Heavier and heavier dosages are required year after year to achieve the same result. And in some places, especially when insecticides are being used, both the soil and its produce are being poisoned. I am told there are some U.S. farmers who use chemicals to get a high output from their commercial crops, but who meet their homestead needs from a separate area where they do not use chemicals at all. There is also a recent Indian report about the environmental effects of the Green Revolution, with its heavy dependence on fertilizer, which has revealed adverse effects on the health of farmers, and of some peasants who do not themselves partake of the benefits of the new methods, but whose soil is affected by water flowing from the Green Revolution areas.

We have not reached this intensity in the use of chemical fertilizers, except possibly in the cotton fields, where the need may be to change the type of chemical fertilizer used. And there is no reason why we should be afraid of chemicals, any more than a man with an occasional headache should refrain from using aspirin because other people use so many that they die.

For I am not one of those, although I know that such people do exist, who are against chemical fertilizers and insecticides on principle. I believe they can be very useful, alone or in combination with natural methods of soil protection, when used in moderation and in appropriate circumstances. We do have commercial farms in Tanzania; they should and they must use chemical fertilizers to maintain and improve their soil fertility, even if they also use natural methods of soil enrichment. There are certain crops which seem to grow economically in Tanzania only in tandem with chemical fertilizers. It may be that even for the latter, there are better ways—more self-reliant ways—of fertilization; but until we are sure of that, and know what they are, we must continue to buy or make chemical fertilizers and transport them to the farms and the fields.

For there is the problem: Chemical fertilizers are a manufactured by-product of oil or natural gas, or are minerals which have been treated in a large factory, or both. We have one fertilizer factory in Tanzania, a country of about 360,000 square miles. Until this year, it has been getting its raw phosphate (as well as all its other chemical inputs) from overseas. In the future, it will get it from a mine just opened some 310 miles away. Inevitably, the fertilizer is expensive. All oil-based products are expensive, and transport, as well as the imported chemicals, are dependent on oil products. Further, in our case, the foreign exchange shortage means that supplies of fertilizer are sometimes interrupted—the factory closes down because we do not have the foreign money with which to buy its inputs. And there is for us also the physical difficulty of transporting the manufactured fertilizer over hundreds of miles of old railway line with few wagons, and over poor roads with old lorries. Quite frequently the fertilizer does not arrive at the farm at the time it is needed.

Fortunately, most Tanzanian agriculture does not have to depend upon chemical fertilizers. There are scientific methods of agriculture which preserve soil fertility and use no chemicals at all. It is those, or some of them which we have come to this workshop to learn about.

In many parts of Tanzania, our peasants traditionally grew a main crop and another crop in the rows between it, or sometimes just scattered among the other seeds. In our enthusiasm for the highest possible output of a particular crop, we were at one time discouraging this practice. It is now clear that, once again, the peasant knew better than the experts, for the total crop output from intercropping systems is frequently higher than

that where a plot is reserved for the main crop only. And certainly, labor productivity is often higher, because the need for weeding is reduced and the soil is preserved from being either baked or washed away. Everything depends upon which crops you combine. Scientists can now tell us which combinations are appropriate and why. For example, they can explain why it is good in certain kinds of soils to interplant rows of maize with rows of particular legumes, or banana plants with certain kinds of fodder grasses. Also, they have demonstrated that appropriate interplanting reduces the incidence of some plant diseases, or insect infestation; they can often tell us which kinds of intercropping have those effects. We have such scientists, and such experimental plots in Tanzania. Our trouble is that we do not disseminate that knowledge, and put it into practice.

Again, appropriate crop rotation—planting different crops in a cycle of three or four years—can maintain or improve the fertility of the soil, without the application of fertilizer, or even manure or compost. It depends on what your rotation is, and the correct one depends upon your soil. For example, experimental results from Ukiriguru have shown that a fallow period of three to four years in which a cassava crop is left in the ground in that area produces an effect comparable with a long period of fallow. This principle of crop rotation is very easy for our peasants to understand. It is, in effect, what they have been practicing by their system of shifting agriculture.

Nor is that all. Where the soil fertility has already deteriorated, or where, for economic or other reasons, the peasant does not want to follow an appropriate crop rotation pattern, it is still possible to improve fertility by natural methods. There is the practice of "green manure," digging the crop residue back into the soil. And there is compost. This also amounts to putting back into the soil the goodness which has been taken out of it. Finally, for those areas where domestic animals are part of the peasant culture, there is the use of manure. Again, we have in Tanzania places where this is used to the maximum—with very impressive results. I hope that some of you will have visited such farms; often they are run by our own experimental or training institutions, or by missionaries.

Compost and other methods of fertilization are the subjects of this workshop. I have been talking only in general terms, and about the principles; the experts are here with us. Gentlemen, you are very welcome. I know that these experts from Rodale Institute will be the first to tell us that neither they nor their country are unique in their knowledge, or their practice of what is sometimes called "organic farming." There are practitioners throughout the world. But it is perhaps appropriate that we should welcome Americans talking on this subject. For if these methods of farming can hold their own in the home of mechanical and chemical farming, then surely people can hardly question their relevance to getting increased output in our own conditions of very much lower agricultural productivity.

And let us remember that our recently published Agricultural Policy Statement gives very great emphasis to improving our peasant agriculture—increasing its output per acre, and per man-hour. The use of compost, manure, crop rotation and intercropping is the answer to the peasants' questions about how they can increase their income without becoming dependent upon an unreliable supply of expensive fertilizers and other inputs from outside their village and farms. Compost can, as I understand it, be made in each field. It certainly does not have to be transported from Tanga. When we talk about village self-reliance as being the foundation of national self-reliance, this is the kind of thing we should be talking about.

All of you here are involved, directly or indirectly, in making a success of our drive to increase agricultural output. Further, we are all concerned with peasant agriculture, not commercial farming, for which this workshop may be less relevant. You are all experienced

people. You will, I hope, have questions to ask our visitors, and you will also have some experience or problems to contribute to the discussion. I challenge every one of you to learn as much as you can this week, and then to pass to others what you have learned.

For this workshop must be a beginning, not an end. The whole government machinery, led by the Ministry of Agriculture, and all our leaders in other fields, must promote the application of self-reliant methods of protecting and improving our soil fertility. This is a crucial part of our drive for increased output of food and export crops, and therefore of our recovery program.

Mr. Ambassador, Mrs. Miller, our guests from Rodale, Dr. Kasembe, and friends: I wish you all an interesting and useful workshop.

Julius K. Nyerere

Mwalimu Julius K. Nyerere

ROLE OF
WOMEN IN AGRICULTURE

HONORABLE
Mrs. Gertrude Mongella, M. P.
MINISTER OF STATE
PRIME MINISTER'S OFFICE

Despite the ongoing war on economic saboteurs, we must also feed our people. Actually, this workshop has been launched at the right time—when we really need it. I would like to thank the organizers: His Excellency, the U.S. Ambassador and his wife, and the Rodale group.

Agricultural science must have been begun by a woman, because she spent much time around the home while men went hunting, and she was exposed to the seed which then produced wheat or barley.

Tanzanian women should have much to contribute to alleviate our current food problems. Most of our food comes from the peasant farmers, who happen to be women, in most cases. In other words, women are the most involved in this process of production.

The main aim of this speech is to get the message across to the agricultural policy planners that they should be aware of the woman's part in agricultural production, and that they should bear that in mind when making agricultural decisions. For example, when designing tools or equipment for new or improved farm technologies, the ultimate user—the woman—should be considered, to avoid inconveniences in their usage.

In addition, any new technology to be implemented on the farms should also reach the women, who are actually going to put it into use. Therefore, the Extension services should be effective enough to channel the necessary information from the researcher to the farmers. There are many well-established media that can be used to disseminate information—and these should be used. Follow-up programs should be implemented to evaluate success or failure of introduced programs to farmers.

I would also like to point out that costs of chemical fertilizers cannot be easily met by farmers; thus, composts and manures are the most promising answer to our present soil fertility problems. Our major aim should be in the increasing of output per given plot, rather than expanding the area. Compost can be prepared around the homestead, where most food for home use is produced. Farmers once were self-sufficient for food, with the exception of a few articles purchased. Vegetables, root crops, fruits and oil seeds (groundnuts, oyster nuts, etc.) were grown, and chickens, goats, etc. were kept around the homesteads.

Should changes be needed, Umoja wa Wanawake Tanzania (UWT) can be used to put pressure on society. A strong group pressure is usually needed to make these changes.

IMPORTANCE OF RESOURCE REGENERATION

R. Rodale, Rodale Press Inc., Emmaus, Pa. 18049

Whenever I speak to a U.S. audience about American agriculture, I ask people to think of farming as a three-legged stool.

One leg is production. That is the part of farming that most people think about. How much food and fiber is being produced? Admittedly, that is a very important question. But production is far from being the only measure of the success of a country's agriculture.

The second leg is people. Farming is not only a way of production—it is also a way of life. Many Americans want desperately to either stay in farming, or to become farmers. But they are having difficulty doing that. The people leg of American farming is short; some would say too short. Many millions have had to leave farming and go to live in cities, where, in today's economy, they sometimes have trouble finding work.

The third leg of the farming stool is the natural resources that form the primary supply of elements that flow into farm production. The land is the chief resource. In America, it is diminishing. Over 6 billion tons of topsoil erode away each year. Water used for irrigation must be pumped from deeper in the earth each year, and so becomes more expensive. Even the quality of the air is being changed by farming.

I point out to the people that American agriculture has been formed into a stool with three legs of unequal length. The production leg is very long—actually too long. We produce more than our people can eat, and much more than we can sell to buyers in other countries. The people leg is very short, and a part of the resource leg is being cut off each year.

That image of our farming system being made up of three basic parts is extremely important. Because if you look quickly and superficially at farming in the United States, you see only that it is the most productive system ever devised by the human mind. The amount of food and fiber being produced on our farms is so vast that it is hard to find words that describe such production in terms people can grasp.

Consider maize, for example. We produce 8 billion tons of maize each year. How much is 8 billion tons? It is simply two bushels of maize for every person alive today on the face of the earth. And 8 billion tons is also far more than we need, or that we can sell.

U.S. production of soybeans and wheat and other important crops also far exceeds the amounts we need, or that we can market effectively in international commerce.

I point out those facts because only when you look beyond production can you see that American farming is more than the most productive system ever created. The vast production hides the fact that farming on that pattern is also the most destructive of all systems.

It is destructive of large amounts of soil. Roughly half of all our topsoil has been worn away. Agriculture is draining our land of valuable water. The large aquifer running north and south through the middle of America has receded deep into the earth. You can drive for miles through rural areas that once were heavily populated, and see far fewer homesteads and shrinking towns. Yet our production of food and fiber is greater than ever.

However, even great production will not hide the fact that an agricultural stool with two short legs is not very comfortable for city people to sit on. And it is especially not suited to the needs of the people who remain in farming. The best way to explain that is by switching from the analogy of a stool directly into the realm of economics. I'm not sure how it works in Tanzania, but in the U.S., people are accustomed to thinking of almost everything in economic terms.

The cost of farm production today is high, and continues to get higher, while the prices for farm commodities remain low. Overproduction is the prime reason for low commodity prices, as well as increasing competition for markets from growers in other countries. But, again, we need to look beyond production to understand truly what is happening. The costs of production are

continually rising, even in the face of declining prices for farm products. And it is that squeeze which is of prime concern to American farmers.

Take, for example, a 100-kilogram quantity of nitrogen. Ten years ago, a farmer in our country could exchange 53.3 kilograms of maize for that nitrogen. Today, he must give the dealer 527 kilograms of maize to get that same 100-kilogram quantity of nitrogen. And that is not an isolated case. The same change in the exchange power of farmers has taken place in almost all areas. Farm equipment is now much more expensive. A farmer who, 10 years ago, could buy a typical wheat combine for 6,290 bushels of wheat must now give 23,800 bushels.

If the soil had not eroded, and if water were still available in dry areas close to the surface, those problems would be less troublesome. Farmers could then produce good crops with small amounts of fertilizer, and with low pumping costs for water. But the cutting away of the resource leg of that farming stool I described earlier takes those options out of reach of many people. They now have to pay ever-higher prices for things that they used to get free, or almost free, from the natural resource base of agriculture.

What are American farmers doing about the poor economic conditions in which they must operate? Many are simply cutting back as much as they can on the use of inputs, and on the purchase of equipment. A good example is Kutztown, Pennsylvania, farmer Ben Brubaker. Brubaker spends $53.15 less per acre to grow maize than the average Pennsylvania farmer, yet produces 28.3 more bushels.

In addition to growing maize, Brubaker feeds about 250 cattle, and grows hay, soybeans and small grains on his 322-acre farm. He substitutes machinery and labor for synthetic fertilizers and pesticides. But rather than purchase new equipment every few years like many farmers, he repairs and rebuilds worn-out items. The result: His current machinery, worth $286,000 new (at 1982 prices), cost him just $59,000.

To protect his 150-acre Wisconsin dairy farm from erosion, Jack Kinsman quit growing maize and using chemicals in 1965. Barnyard manure and frequent renovations have kept his hayfields—some in use as long as 12 years—vigorous and productive. And his 29-year-old tractor and $250 hand-baler are just two examples of how abandoning maize has kept Kinsman's equipment costs below $15,000.

Ten years ago, Vermont dairyman Leonard Germain also gave up growing maize silage in favor of a grass-legume mix. He cut back on feeding purchased grain, too. And since then, he has all but eliminated soil erosion on his hilly, 150 acres, and nearly doubled his income over feed costs.

Germain fertilizes his hayfields with cow manure after each cutting, and says growing legumes helps him produce more total nutrients per acre and have better-fed plants, greater yields and higher-producing cows.

The United States government is helping other farmers with its Payment-In-Kind program, which this year is giving American farmers large amounts of grain in storage if they agree to cut back on the acreage they plant. That is certainly not a program that can work over a long period of time, but it is an effort to do something quickly to help farmers through a difficult period.

Many farmers, though, are thinking hard about what is happening, and are asking themselves if they can do more than simply cut back on the level to which they are using the current system of farming. They remember that, in earlier times, when they grew more diversified crops in rotations instead of just alternating maize and soybeans year after year—as many Corn Belt farmers do—they needed much less fertilizer. And their profit picture was better.

Diversity has helped Dick and Sharon Thompson's farm in Boone, Iowa, grow profitable and virtually self-sufficient. The Thompsons feed hogs and cattle, and grow hay, maize, soybeans and oats on their 300-acre farm. They gave up synthetic fertilizers and pesticides in 1967, and now rely on wise manure handling and crop rotation—including growing a legume three out of every five years—to reduce erosion, maintain soil fertility and control weeds and insects.

Of course, in earlier times, farmers had more good topsoil than they do now. But they still are asking themselves whether they really need all the fertilizer they have been buying. And many have begun to work out and use new systems of farming that allow them to produce good crops, but which reduce their need for fertilizer and other inputs.

Hairy vetch, a winter-hardy legume, supplies up to 80 pounds of nitrogen per acre to Bill Grantham's maize and soybeans. The Millsboro, Delaware, farmer plants vetch after harvest in fall, and turns it under the following spring. In addition to adding nitrogen to the soil, Grantham says the vetch cover crop reduces soil erosion, increases his soil organic matter level, and 'pumps' P, K and other nutrients from lower soil levels to the soil surface.

While Don Lambert's neighbors, who grow

winter wheat, spend nearly $50 per acre for nitrogen and lose up to 200 tons of topsoil per acre to soil erosion each year, the Washington farmer grows spring wheat instead. That lets him use an Austrian winter pea cover crop to provide all his nitrogen and cut erosion by as much as 75 percent. And though Lambert's 780-acre farm has been chemical-free for 73 years, the top 12 inches of his topsoil contain more organic matter, and extractable N, P, and K than heavily-fertilized farms in the area.

Finally, by taking his 180 rolling acres in Belmond, Iowa, out of row crops in the late '70s and planting them to soil-saving hay, Arden Kiefer actually reversed erosion on his farm. Iowa State University agronomists say Kiefer now builds one-half to one inch of new topsoil every five years. Converting to hay also enabled him to eliminate pesticides, cut production costs, stabilize his cash flow, and reduce his machinery costs by 30 percent.

At our Research Center, we have given a new name to that new way of managing the production side of a farm. We call it regenerative agriculture, because it has the very ambitious and important goal of serving to regenerate the soil, the water, and the economy of farms. It is a form of agriculture that looks beyond production—which we admit is very important. The goal of regenerative agriculture is nothing less than to restore the legs of the farming stool to equal length.

Regenerative is a wonderful word. It can mean more than simply to make new again. In my dictionary, the definition of the word regenerate is expressed this way: To restore to a better, higher, or more worthy state. A regenerative agriculture, therefore, has as its goal the ever-increasing soundness of the human and natural resource base of our food-producing system, to help that system continue to grow in strength to meet the needs of our expanding world.

A regenerative agriculture does not accept destruction of people and land and water as a price that must be paid for production. No! It says that those of us who want to be farmers can still farm, and we can make the land and the water and the air better in the process. At least, those are our goals.

To accomplish that, however, farmers have to make an important philosophical adjustment. They need to leave behind the idea that their function is to dominate nature. Sad to say, the basic idea underlying much modern farming is the thought that nature is not reliable, and therefore must be controlled or dominated. Heavy applications of pesticides are sprayed not just to kill weeds and insects, but to make the farm so toxic that they won't dare try to live in that environment.

Yet on 1,100 acres in California and Arizona, Steve Pavich and Sons grow 1 percent of all the table grapes sold in the United States—with no synthetic pesticides whatsoever. By relying on compost for well-balanced soil fertility, the Paviches produce healthy, rapidly growing vines capable of withstanding pest outbreaks that would devastate other farmers. Beneficial insects thrive in the farm's non-toxic environment, and further help keep pest populations low

Large amounts of fertilizers are applied to American farms primarily to bring nutrient levels up to some standard or norm, rather than to enrich the soil so that the soil itself can feed crop plants from its own regenerative storehouse of nourishment. Land that hungers for a continuing variety of plants, grown in rotation, is forced to grow the same kind of plant year after year.

All those efforts at dominance of the land are costly. They raise the economic cost of farming, simply because the bills that come to the farmer's desk for the inputs of dominance agriculture are high. But they are costly in another way, which I feel is far more important. When nature is dominated, it loses much of its ability to give farmers the free gifts of the land and the life in the land, which have always been at the root of prosperous agriculture.

The regenerative farmer gradually moves away from the idea that his or her purpose is to dominate nature. Taking the place of the idea of dominance is the concept that the farmer is a catalyst whose purpose is to cause nature to allow greater production to take place on the farm—hopefully while causing the farm itself to increase in value and richness.

I think we could all agree that that is a fine philosophy to express, but could be difficult to put into practice. Anyone who feels that way—who has doubts about the application of the regenerative idea—need look only to the Orient to see that the concept has been used effectively there almost since the dawn of agriculture. Franklin Hyde King documented, in the early years of this century, the ways that Chinese, Japanese and Korean farmers continually renew their farms in his classic book, "Farmers of Forty Centuries."

And, incidentally, it was that book and its message which encouraged my father and other people to begin to apply the methods of regeneration to farming in the United States, over 40 years ago.

Listen to how King described the economy that is the renewing force of Oriental farms:

Almost every foot of land is made to contribute material for food, fuel or fabric. Everything which can be made edible serves as food for man or domestic animals. Whatever cannot be eaten or worn is used for fuel. The wastes of the body, of fuel and of fabric worn beyond other use are taken back to the field; before doing so they are housed against waste from weather, compounded with intelligence and forethought and patiently labored with through one, three or even six months, to bring them into the most efficient form to serve as manure for the soil or as feed for the crop. It seems to be a golden rule with these industrial classes, or if not golden, then an inviolable one, that whenever an extra hour or day of labor can promise even a little larger return then that shall be given, and neither a rainy day nor the hottest sunshine shall be permitted to cancel the obligation or defer its execution.

I have been to China and Japan and have seen how productive their fields remain after 4,000 years of farming. And I have seen the diligent way that farmers return organic materials to the land, and help it to continue to renew itself. Their work is a useful example, particularly because those countries must feed very large numbers of people from limited areas of land.

But I think that every country needs to develop its own kind of regenerative agriculture, to suit its particular needs and culture. One country or region can look at the farming of another to get ideas and possibly inspiration. But I think we need to be cautious about trying to imitate or copy a specific method that works well in one part of the world. Geography and the social sciences teach us that each people and part of the world is different in many ways from others. And history is replete with examples of failed attempts to transport whole farming methods from one country to another, without allowing for the flexibility that is essential if methods are going to be applied in another place successfully.

What is transferable from one continent to another—and I am stating this as my opinion and not necessarily as a proven fact—is the philosophy of regeneration. It is inconceivable to me that there is any place in the world where the earth will not reward those who understand that vital cycles of life flow through the soil, and need to be protected and renewed. An idea like that is universal. It travels well everywhere, and can form the basis of action in any country.

There is yet another idea which goes hand in hand with the concept of regeneration, and which I think adds greatly to its usefulness. That is the thought that we who are alive and working today have an obligation to consider the needs of future generations. Farmers especially need to have in their minds the idea that the land they farm will have to support even more people for many centuries into the future.

We need to go beyond even the idea of sustainability. It is not enough merely to sustain the present level of agricultural effectiveness. Because population is increasing, and because resources from outside the farm and the country will probably be harder to get in the future, we need to set future goals for agriculture that are much higher than those we try to attain today.

How are these twin ideas of regeneration and reponsibility to the future being accepted today in the United States? They are growing in strength and acceptance. Erosion of the soil is again a major issue in our country. Farmers in America are learning to use less commercial fertilizer, and to make much better use of their manure and other organic resources.

There is also much more interest in the conservation of water and of energy. While the majority of American farmers are still tuned to the idea of domination of nature, and have yet to understand the full importance of regenerative concepts, I feel much progress is being made.

I am, of course, most familiar with the agriculture in my own country. I am convinced that in America, an agriculture that is regenerative will lead automatically to the growth in productive capacity that we must have to feed larger numbers of people in the future.

My hope and expectation is that the same progress toward regeneration and a greater abundance of food can be achieved here in Tanzania, as well.

INTERNATIONAL OVERVIEW OF REGENERATIVE AGRICULTURE

R.R. Harwood, Rodale Research Center, Kutztown, Pa. 19530

I will attempt in this paper to provide a synopsis of the origin and development of organic farming philosophies, their major theories, the locations and extent to which they are practiced and their evolution into a regenerative concept. The paper will conclude with an analysis of the relevance and application of modern regenerative practices to Third World development. Non-English language literature is touched upon only briefly, but a general reference is given to literature in various European languages.

Overview

There are three themes which run through regenerative agriculture philosophy: 1) the interrelatedness of all parts of a farming system, including the farmer and his family; 2) the importance of the innumerable biological balances in the system; and 3) the need to maximize desired biological relationships in the system, and minimize use of materials and practices which disrupt those relationships.

It is useful to view the emergence and development of regenerative philosophy and practice against the changing agricultural technologies and philosophies of the past century. Coincident with those changing technologies, and perhaps because of them, is the change in structure of both farms and national agricultural systems.

Early 20th-Century Thought: The Concepts of "Wholeness"

Agricultural development is the process of adjusting farming patterns and technologies, within the constraints of available resources, to achieve ever-increasing levels of productivity. There are numerous historical examples of social and technological changes which increased agricultural productivity. Some practices led to resource overdraft or environmental imbalance, and, in many cases, were altered as their weaknesses became apparent. In others, the social system became so locked into a non-sustainable pattern that change was impossible and the civilization collapsed. Sir Albert Howard (1947) describes the history and consequences of such change.

The past 100 years in agriculture, coincident with the Industrial Revolution, has been aptly named the "age of alchemy" (Rifkin, 1983). The work of Liebig ushered in the "chemical revolution," characterized by a thought and scientific process that reduced every process to its basic chemical reactions. This process, sometimes termed the "legacy of Liebig," has culminated in the "dominance" attitude and approach to agricultural production of the 1960s and 1970s (Harwood, 1983c). This attitude is characterized by a complete restructuring of nature through the use of massive inputs to permit high productivity within a specialized, biologically simplified agricultural system.

Against this background of change the regenerative philosophies were taking root and coalescing. Many scientists and astute farmers were apprehensive of contemporary trends. They rebelled, in particular, against the increasingly narrow views of natural systems and their role in "modern" agriculture. Those with a more complete appreciation of the complexity of biological relationships have contributed several classical works which were pivotal to later thinking.

Charles Darwin spent his later years in England meticulously studying soil floral and faunal activity. His extremely interesting work, "The Formation of Vegetable Mould Through the Action of Worms, With Observations of Their Habits," documents in great detail the intricate biological balances in the soil (Darwin, 1882).

In the early 1900s, several works focused on the broad, non-simplistic aspects of agriculture and their complex interrelationships. Elliot, in 1907, wrote of the complexities of pasture mixes and their importance to soil fertility in rotations. The true classic, however, which stimulated later thinkers of the British and American schools, was King's "Farmers of Forty Centuries" (1911). King

described in this book, and in his following book, "Soil Management" (1914), the complexity of integration of the then highly productive traditional systems of Asia. The interrelationships between these systems were the key to the thinking of all regenerative agriculturists who followed.

Biodynamic Agriculture

The first organized and well-defined movement of growers and philosophies was the biodynamic movement, which arose from a series of lectures given by Rudolf Steiner, the founder of Anthroposophy, in 1924 (Steiner, 1958). The basic tenets of biodynamic farming include:

1) Sound farming and gardening techniques, no matter whether old or new, 2) Such principles as diversification, recycling, excluding objectionable chemicals, decentralized production and distribution, etc., ideas held in other biological movements. Since the 1920s, biodynamic farmers have developed the execution of such principles, and also reintroduced useful traditional techniques; 3) The specific biodynamic measures and concepts as they evolve from Steiner's spiritual teaching, which mould the method into a consistent whole. (Koepf, 1981)

The latter point is usually what separates biodynamic practices from the rest of biological agriculture. It includes "the stimulation and regulation of complex life processes by biodynamic preparations for soils, plants, manures" (Koepf 1981). It also includes the consideration of cosmic and terrestrial forces on biological organisms. Biological rhythms are affected by a range of cosmic forces. Although growing evidence, mostly from biomedical research, suggests the presence of such effects, their importance in agriculture has not been carefully evaluated.

Early publications in biodynamic agriculture include Pfeiffer (1934; 1943; 1956) and Baker (1940). These publications set forth the arguments for the disruptive effects of concentrated synthetic fertilizer and pesticides, which have been major positions of all biological or organic practitioners through the years. The connections between the biological "health" of the soil and the health of animals and humans associated with it or using produce from it were also articulated at this time.

These concepts did not necessarily originate with the biodynamic school, but they became an integral part of the thinking of Steiner and his followers. More recent summaries of the biodynamic concepts include Koepf (1981), Steiner (1958), Rateaver and Rateaver (1973), Pauli (1967), Koepf *et al.* (1976), Pank (1976), and Jeavons (1979).

Although the biodynamic movement is concentrated in European and Scandinavian countries, a limited number of practitioners, both commercial and home-garden, are found in the United States and Canada.

Development of "Humus Farming" Concepts

A school of thought evolved, both as a part of and in addition to the biodynamic school, which focused on the importance of humus in agriculture. This concept formed the foundation for several biological agriculture philosophies which emerged in the 1930s through 1960s.

Browne, in 1855, wrote "The Field Book of Manures or the American Muck Book." Roberts (1907), Fletcher (1907) and Waksman (1936) wrote basic works on humus-oriented soil fertility which, at the time, were considered state of the art in scientific thought.

A major development which not only advanced the techniques for compost making, but began to discuss the disruptive effects of concentrated synthetic fertilizer, was that of Howard and Wad in 1931. This work marked a major point of departure for the humus-farming school. Definitive technical books and applied humus-farming books soon followed (Waksman, 1936; Billington, 1942; King, 1943; Bruce, 1943; 1945a; 1945b).

In 1943, Sir Albert Howard's book, "An Agricultural Testament," became a new landmark. Not only did it add significantly to the emerging thought on humus farming through its exposition of the Indore method of composting, it restated in positive, modern terms the concepts of integrated farming.

"An Agricultural Testament" highly influenced the Soil Society work in England, as well as the writing of J. I. Rodale in the U.S. Subsequent works by Howard further elucidated the connections between soil and health, and clarified the methods to be used in an agriculture based on biological structure rather than on the use of synthetic chemical inputs (Howard, 1945; 1946; 1947).

The humus-farming philosophy reached its peak in the early 1950s with publications by Sykes (1949; 1951; 1959) and Seifert (1952). These works proved to be the mainstay of the organic farming movement that followed.

The principles of composting and compost use were well-articulated by this time, and considerable research has since been done on the handling of municipal waste, with emphasis on methodologies. Many feel the culmination of the agricultural composting studies is the "Rodale Guide to Composting" (Minnich and Hunt, 1979).

The Emergence of the Organic Philosophy

The basic tenets that led to organic, biological and ecological agriculture, and eventually to the regenerative farming movement, can be traced to Sir Albert Howard's "An Agricultural Testament" (1943). The ideas of an integrated, decentralized, chemical-free agriculture were advocated by Northburn (1940) in a largely overlooked work. As far as we can tell, he was the first to use the word organic to refer to the entire philosophy and practice.

Graham (1941) and Barlow (1942) exemplify the rethinking of agricultural thought that occurred in the 1940s. Barlow was especially critical of the impacts of early-1940s agriculture on soil degradation and reduction in diversity through specialization.

In 1943, the momentum increased significantly with the publication of Lady Eve Balfour's "The Living Soil." Faulkner's "Plowman's Folly", in 1943, was another classic spurred by the Dust Bowl of the 1930s in the American Great Plains. Faulkner described in forceful terms the biological and human tragedy resulting from misdirected technology.

In 1945, J. I. Rodale's "Pay Dirt" became the rallying point that carried the organic movement in America through the difficult 1960s. A lengthy series of books by "J.I." was to follow (Rodale 1948; 1953; 1954; 1977).

The late 1940s and early 1950s was a prolific period for organic literature. Faulkner (1946; 1947; 1952) was not only a critic of contemporary agriculture, but an experienced Extension agent and farmer as well. He detailed his own experiences in the regeneration of worn-out soil with organic farming practices.

Louis Bromfield also made a significant contribution, with his accounts of organic farms where people, crops and livestock were intermeshed in a living system (1946; 1947; 1950; 1955). Bromfield felt strongly that the sensitivity, skill and dedication required of a good farmer meant that "not everybody can farm" (1950).

Several other authors, including Pfeiffer (1947), Cocannouer (1950; 1954; 1958) and others (Howard, 1947, Wickenden, 1949; Hainsworth, 1954) continued through 1956 to articulate the increasing environmental harm and resource degradation brought about by "modern" farming methods. They repeatedly advocated the wholistic approach to agriculture.

Table 1: **Alternative Agriculture Farms in Europe**

	Biodynamic		Total Alternative		
Nordic Countries	*Number*	*Area (ha)*	*Number*	*Area (ha)*	
Sweden	150[1]	1,800	200	2,400	
Denmark	85[1]	1,200	150[2]	2,000	
Norway	30[1]	350	40	480	
Finland	25[1]	500	50	1,000	
				5,800	
Total agricultural area of these countries = 10 million ha (less than .1%).					
Netherlands	170 to 180	1,800	350	3,000	(0.15% of area)
Germany	600 to 700	12,000	1,300 to 1,500[2]	avg. 25 ha 1.2 cattle/ha	(0.1% of area)
France	150	3,000	5,000[3]		(1.1% of area)
Switzerland	100		600[4]	8,400	(0.8% of area)
Austria	100		600[5]	12,000	
England	few		200[6] (30 to 50 pure)		
Italy	?		?		
East Germany	1		1		
Belgium	few		few		
Spain	few		few		

Sources: personal contact, 1983
[1]Petterson, B. [2]Vogtmann, H. [3]Lairon, D. [4]Ott, P. [5]Plaholm, G. [6]Woodward, L.

The year 1956 marked the end of nearly 20 years of publication in the area of organic farming. Interest in the concept remained mostly with gardeners concerned about their health and home environments in the 1960s and early 1970s. In America, this group was served by Rodale's Organic Gardening and Farming magazine.

The widespread adoption and scientific focus in the 1950s, '60s and '70s on chemical technologies effectively suppressed new thinking in organic agriculture. In Europe, the biodynamic movement was holding its own at low levels of participation. Despite Rachel Carson's "Silent Spring," and an awakening of environmental consciousness, the 1960s and early '70s were a period of dormancy for regenerative agricultural thought.

Causal Relationships

There appears to be a relationship between the dominant agricultural philosophies of the past and the subsequent development of regenerative agricultural thinking. The early impetus for wholistic thinking seemed to be a reaction to the reductionism in agriculture brought on by the Industrial Revolution. The major impetus for organic thinking in the 1940s followed the trauma of the Dust Bowl in the U.S., and emerged in England from the introspection following World War II.

The dominance of chemical-intensive agriculture in the 1960s, spurred by the euphoria of Sputnik and unhindered by concerns for environmental fragility or impending resource constraints, significantly influenced philosophical thought during that period. Organic philosophy, at least in the U.S., was relegated to a growing number of garden enthusiasts. The impact of that era is still being felt today, particularly among scientists trained during the 1950s and 1960s who still see organic agriculture in the garden context (Donaldson, 1961).

In the late 1970s, interest in organic farming grew exponentially, because of increased environmental awareness and a heightened sense of worldwide resource limitations.

Table 2: **U.S. Commercial Regenerative Farms**[1]

		Number of Farms
USDA Estimate[2]		*at least 24,000*
Rodale Estimate, 1983 (total)[3]		*30,000*
Mixed crop/animal[4]	70%	21,000
Beef, dairy, sheep. Coastal Oregon, North-central states, Corn Belt		
Mixed field crop[4]	5%	1,500
No livestock. Dryland, small grain-producing areas in Michigan, scattered areas		
Mixed vegetables[5]	15%	4,500
5 to 30 acres		
Specialty crops, fruit[5]	10%	3,000

[1]From Harwood, 1983b

[2]From Papendick *et al.*, 1980

[3]Based on very rough estimates of *The New Farm* subscriber base.

[4]Most produce sold through normal channels with no price differential.

[5]Produce often sold as organic at a higher price

Present Extent of Commercial Farm Practice

The organic gardening movement in the U.S. has grown to include a significant proportion of the country's more than 30 million home gardens. Growth in commercial organic agriculture was slow through the 1960s, but has accelerated markedly in the late 1970s and 1980s. Few hard statistics are available, but the best-informed estimates for Europe show 1 percent or less of the area farmed organically or biodynamically (Table 1). The French farms follow, in large part, Lemaire-Boucher methods. Figures on numbers of biodynamic farms are relatively accurate because of the distinctness of their technology and the linkages between them through biodynamic organizations.

In the U.S., statistics on numbers of regenerative farmers are largely absent. The first estimates were done in 1980 by the U.S. Department of Agriculture (Papendick *et al.*, 1980). Extrapolating from a survey of readers of The New Farm[8] magazine[1], USDA estimated that there were at least 24,000 commercial organic farmers in the U.S. (according to the USDA definition of "organic farming"). Based on our own circulation data and estimates, the number appears closer to 30,000, with a breakdown presented in Table 2.

[1]*The New Farm: Magazine of Regenerative Agriculture* is published seven times per year by the Regenerative Agriculture Association, Emmaus, Pennsylvania, 18049. It has a subscription base of 40,000 readers.

Present Schools of Regenerative Agriculture Philosophy

Biodynamic: The biodynamic movement is the oldest and best-defined of the alternative movements. Its key sources were listed above.

Howard-Balfour Agriculture: Boeringa (1980), in his translation of the "Dutch report" on alternative agriculture (Com. for Res. into Biol. Methods of Agri., 1976), describes the British organic system of followers of the "Howard-Balfour" writings. This system eliminates synthetic fertilizers and chemicals, and maintains soil fertility with manures, composts and a crop system which brings nutrients upward in the soil through rotation with deep-rooted crops. Composting is an integral part of the system. There are very few commercial practitioners of Howard-Balfour agriculture in England, but a large garden movement subscribes to these principles, which resemble the principles described by J. I. and Robert Rodale in the U.S.

Lemaire-Boucher Agriculture: The Lemaire-Boucher system, which is widespread in France but little-used elsewhere, includes arable farming and the raising of cattle. Boeringa (1980) states:

It is based upon the notion that mineral fertilizers and chemical pesticides, just as much as uncomposted organic fertilizers, disturb the "balance" of the soil and thus induce diseases and pests (Boucher, 1968). Through administration of composted organic fertilizers, leguminous plants and Calmagol (a product characterized as unique which consists of coral algae Lithothamnium calcereum), the balances are restored and maintained. Calmagol is also the catalyst of the so-called biological transmutations by which under the influence of primarily microbiological processes, elements change into other elements, in ideal circumstances according to the requirements of the crop.

This latter point is unique to Lemaire-Boucher.

Organic-Biological Agriculture: The theoretical basis for this form of agriculture was spelled out by H. P. Rusch in a series of publications beginning in 1955. Early field demonstrations were done in collaboration with Dr. Hans Muller and his wife, Maria (1969).

In "organisch-biologische" agriculture, the soil is seen as a "digestive organ" for plants. Cycles of lactic acid-forming bacteria include those of the soil-plant-animal-soil and soil-plant-man-soil. The crucial interrelationships of these cycles, in order to function properly, cannot be disrupted by non-organic materials if high standards of health and productivity are to be maintained in all organisms of the system. Organic-biological agriculture as practiced by commercial growers in Switzerland, France, Belgium, The Netherlands, and West Germany is closely linked to the practice of human microbiological therapy.

North American Organic Agriculture: The U.S.-Canadian type of organic agriculture has been defined by the USDA (Papendick *et al.*, 1980) as follows:

Organic farming is a production system which avoids or largely excludes the use of synthetically compounded fertilizers, pesticides, growth regulators, and livestock feed additives. To the maximum extent feasible, organic farming systems rely upon crop rotations, crop residues, animal manures, legumes, green manures, off-farm organic wastes, mechanical cultivation, mineral-bearing rocks, and aspects of biological pest control to maintain soil productivity and tilth, to supply plant nutrients and to control insects, weeds and other pests.

This definition includes farmers who occasionally use a pesticide or a fertilizer, but still consider themselves "organic." Some, for instance, may use urea but no other fertilizer or pesticide. The numbers in Table 2 are based on this definition.

In Maine, the Maine Organic Farming and Gardening Association (MOFGA) has certification rules which exclude farmers who use any non-organic materials. Statewide regulations in California and Oregon specify organic "purity" for produce labeled organic. No other states have strict codes or guidelines for organic growers.

The mixed field crop/livestock systems have an increasing economic advantage in many parts of the U.S. as input prices increase. This type accounts for 70 percent of America's organic farms.

The philosophical and scientific basis for North American organic agriculture has been drawn from the several European schools discussed previously. The first American summary of those theories was J. I. Rodale's "Pay Dirt" in 1945. On page 23, for example, J. I. quotes from both Lady Eve Balfour's "The Living Soil" (1943) and Ehrenfried Pfeiffer's "Bio-Dynamic Farming and Gardening" (1943):

We must keep in mind the fact that important substances come from soil bacteria, and we must consider whether it is correct to disturb the fine interplay of all the soil organisms by bringing in nitrogen in the form of potassium nitrate and using lime and phosphoric acid, because the development of the various sorts of organ-

isms is thus disturbed and hindered, and on this account difficulties will someday arise.

Thus, rational and workable ideas have been borrowed from many sources to arrive at an "organic" system which does not include all of the ideas of European philosophies, but which has taken at least something from most of them.

North American Research Since 1976

Two landmark summaries of alternative and organic agriculture gave impetus to further work. The "Dutch" report (Com. For. Res. into Biol. Farming Methods) in 1976 summarized several European philosophies, but was largely unavailable in English-speaking countries until summarized in 1980 by Boeringa, following an earlier complete translation. The USDA "organic" report (Papendick *et al.*, 1980) detailed, for the first time, the status of U.S. organic agriculture. This work was further summarized by Parr *et al.* in 1983, using the same data.

Summaries of organic agriculture in Australia (Conacher and Conacher, 1982), Canada (Hill, 1983) and Saskatchewan, Canada (Hanley, 1980), give similar findings, for the most part including numbers of farmers, types of farms, major theories and, in some cases, specific technologies used.

The first international conference on alternative agriculture was held by the International Federation of Organic Agriculture Movements (IFOAM) in Sisaach, Switzerland. Its 25 published papers represent a first attempt at scientific documentation on an international scale (Besson and Vogtmann, 1978). The IFOAM symposia of 1978 (Montreal) and 1980 (Brussels) (Hill and Ott, 1982) showed continued research improvement. The 1979 Prince Edward Island conference (Pratt, 1979) included papers on forest farming, soil testing, farm-scale composting and integrated pest management. The latest symposium was held by IFOAM at the Massachusetts Institute of Technology in 1982 (Lockeretz, 1983).

Economic Writings and Research

A general summary of the then available economic literature on organic agriculture from Europe and the U.S. was done by Oelhaf in 1978. Oelhaf concluded that organic farms generally use more labor and fewer cash inputs, and can achieve about the same net returns as conventional farms.

In a more detailed field study, Kraten (1979) found that organic small grain farmers (without livestock) in the U.S. Northwest made less profit than their conventional counterparts. The number of comparisons was small, however, and at least one of the organic farms realized a greater net return than the comparison conventional farm.

The same method of paired comparisons was used for Midwestern mixed beef, field crops or dairy farms by Roberts *et al.* (1979), and by Lockeretz and Wernick (1979; 1980) and Lockeretz *et al.* (1981). Roberts *et al.*, (1979) found that organic farms use less inputs and energy, and achieve higher net income. The more comprehensive, longer-term study by Lockeretz *et al.* (1981) found that organic farms produce slightly less than their conventional paired comparisons, but use far less inputs, have 20 percent to 30 percent lower production costs, and have about the same net return (Table 3). The most startling fact, however, was a 60-percent reduction in petrochemical energy use per dollar of produce on the organic farms. Similar results were reported in a shorter study in Minnesota (Bergh, 1981). Breimyer (1980) comes to a similar conclusion after reviewing all available data.

A widely quoted study by Olson *et al.* (1982) concludes that widespread adoption of organic agriculture in the U.S. would reduce total production. The U.S. would have enough food to meet internal demand, but export surpluses would be cut. Energy use would decrease, food prices would increase and farmers in every part of the country would make more money. Harwood (1983a) reports that a case study organic farm in Pennsylvania had corn production costs 30 percent lower than conventional farms of the area.

Table 3: **Comparative Economic Performance for Crop Production on 14 Organic and 14 Conventional Farms, 1974 to 1976**[1]

	Organic	Conventional
Value of crops	167 (133 to 196)[2]	187 (167 to 200)
Operating costs[3]	33 (27 to 37)	53 (44 to 57)
Returns over costs	134 (106 to 155)	134 (116 to 150)

[1] All data are averages for the two groups for all cropland on each farm, in $ per acre of cropland.

[2] Numbers in parentheses are interquartile ranges (the range encompassing the middle half of each group).

[3] Variable costs only (seed, fertilizer, fuel, lubrication, repairs, pesticides and hired, family and operator labor).

Source: Lockeretz and Wernick, 1980.

Other Scientific Reports

Patriquin *et al.* (1981) report on a mixed dairy-field crop farm in Nova Scotia which achieves complete nitrogen and feed self-sufficiency, largely through the use of Faba bean. Patten (1982) showed similar production levels on paired wheat farms in Washington state. The organic farm had considerably higher soil test potassium levels (Figure 1), suggesting the organic system concentrated nutrients more efficiently in the upper levels of the soil profile. Neither farm received potassium; the organic farm, in fact, received no synthetic nutrients during more than 70 years of intensive cropping.

Petterson and Wistinghausen (1979) reported in a long-term experiment in Sweden that biodynamically treated plots had higher biological activity, better tilth, more organic matter and better water-holding capacity than conventional plots.

There has been considerable scientific debate over the relative nutritional quality of organic and conventionally-grown food. Vogtmann (1981) summarizes recent work and presents data showing longer storage life of certain crops, lower nitrate and higher vitamin C levels in leafy greens grown under organic management.

Other Recent Organic Writings

Masanobu Fukuoka's "One Straw Revolution" (1978) describes his own farm in Japan where synthetic inputs and tillage have been eliminated. This work stresses the "good life" enjoyed on a farm in harmony with nature, echoing the thoughts of Faulkner and Bromfield in the 1930s and 1940s.

The concept of social/biological interaction in a sustainable agriculture was detailed by Berry (1977) in "The Unsettling of America." Berry stresses that modern U.S. agriculture is not an agriculture of people, because farms are seen as factories without consideration for human and environmental well-being.

Wes Jackson, in "New Roots for Agriculture" (1980), proposes a new model based on people, and describes the destruction of natural resources brought on by plow-based production of a small number of annual cereal crops. He proposes a shift to perennial-based agriculture.

Edens and Koenig are also in the forefront of regenerative agriculture thinking. They suggest that impending resource shortages will mandate a closed nutrient-loop agriculture (Edens and Koenig, 1980).

There are several recent works in the U.S. describing organic/ecological agriculture and its various technologies (Edens and Koenig, 1980; Merrill, 1976; Wolf, 1977; Poirot, 1978; Walters and Fenzau, 1979; Kiley-Worthington, 1981). These books are detailed guides to crop rotations, composting, leguminous nitrogen, fertilizers and crop fertility, and even tree farming and permaculture. They all focus on U.S. agriculture, and are relevant mainly to commercial growers.

Wernick and Lockeretz (1977) report that organic farmers are highly motivated by concern for the health of themselves, their livestock and those who consume their products. The desire to stop soil erosion and protect the environment is also important. The desire to reduce dependence on agricultural chemicals is strongly expressed by others (Burns and Campbell, 1979).

Figure 1: **Average Concentrations of Extractable K With Depth in the Lambert (Organic) and Clausen (conventional) Summer Fallow Plot Soil.**

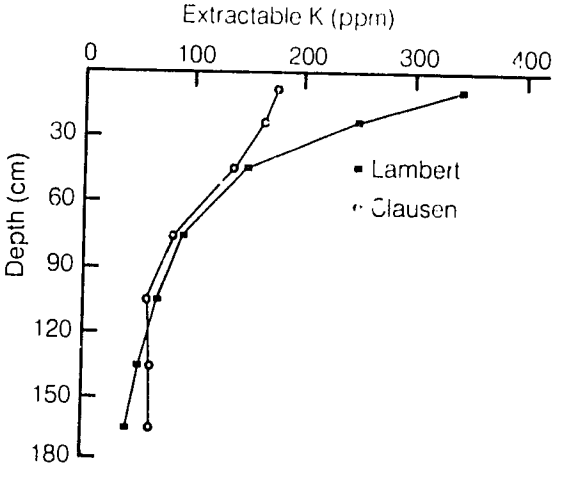

Source: Patten, 1982

The Broadening of the Organic Concept Into Regenerative Agriculture

The concept of regeneration in agriculture is not new. Kolisko and Kolisko (1939) wrote:

> *We are in the midst of destruction: The powers of war are relentless; they are destroying the life of man, of whole populations; they are destroying masterpieces of art and cultural life. In such a movement it is imperative to acknowledge the immense need of constructive and regenerative powers. I want to write therefore about the regeneration of agriculture, which is the basis of the physical existence of men.*

Kolisko and Kolisko went on in a lengthy exposition of the Biodynamic methods of agriculture proposed by Steiner.

Robert Rodale has recently suggested the words regenerative agriculture to refer to a new type of agriculture which goes beyond the organic concept to include changes in macrostructure and social relevancy, and to increase rather than decrease production resources (Rodale, 1983). Harwood (1983b) articulated several of the components of such an agriculture.

A working definition of regenerative agriculture is:

Regenerative agriculture is one that, at increasingly high levels of productivity, increases our land and soil biological production base. It has a high level of built-in economic and biological stability. It has minimal to no impact on the environment beyond the farm or field boundaries. It produces foodstuffs free from biocides. It provides for the productive contribution of increasingly large numbers of people during a transition to minimal reliance on non-renewable resources. (Rodale, 1983)

Harwood shows that production efficiencies of such an agriculture are traced to its biological as well as spacial structuring.

Summary of Regenerative Agriculture Philosophy

1) Agriculture should produce highly nutritional food, free from biocides, at high yields.

2) Agriculture should increase rather than decrease soil productivity, by increasing the depth, fertility and physical characteristics of the upper soil layers.

3) Nutrient-flow systems which fully integrate soil flora and fauna into the pattern are more efficient and less destructive of the environment, and ensure better crop nutrition. Such systems accomplish a net upward flow of nutrients in the soil profile, reducing or eliminating adverse environmental impact. Such a process is, by definition, a soil genesis process.

4) Crop production should be based on biological interrelations for stability, eliminating the need for syntheric biocides.

5) Substances which disrupt biological structuring of the farming system (such as present-day synthetic fertilizers) should not be used.

6) Regenerative agriculture requires, in its biological structuring, an intimate relationship between manager/participants of the system and the system itself.

7) Integrated systems which are largely self-reliant in nitrogen through biological fixacion should be utilized.

8) Animals in agriculture should be fed and housed in such a manner as to preclude the use of hormones and the prophylactic use of antibiotics which are then present in human food.

9) Agricultural production should generate increased levels of employment.

10) A regenerative agriculture requires national-level planning, but a high degree of local and regional self-reliance to close nutrient-flow loops.

Implications of Regenerative Agriculture For Third World Development

Self-reliance and resource-use efficiency must be the building blocks for any long-term solution to Third World agricultural development. Many countries in the Third World have integrated systems which may be closer in structure to a regenerative system than the U.S. model. It remains to adapt the largely Temperate-zone regenerative philosophies and practices to Third World conditions. It would be better to develop new models relevant to Third World conditions.

Two recent writings deal with that adaptation to Tanzanian conditions (Gonsalves, 1982; Maher, 1982). Maher, in the first part of his paper, describes the applicability and difficulties to be expected.

In most Third World countries, agricultural productivity is increasingly limited by low levels of fixed nitrogen and carbon in farm systems. In fact, some countries are actually experiencing long-term decreases of these nutrients. Meanwhile, newly released crop varieties from the massive crop improvement efforts of the last two decades have provided major cereals resistant to a wide range of pests, diseases and adverse soil conditions.

High levels of nutrient input, and of nitrogen in particular, will often give spectacular yield increases, even in mainly rainfed areas. Our primary goal should be to bring the systems to a high level of productivity (with its high levels of cycled nutrients and carbon) and to maintain that high level. This cannot be accomplished solely by the use of highly soluble nutrient sources.

It is hoped that this seminar, with its focus on nutrient cycling, nitrogen balance and other resource-efficient technologies, will provide a range of alternatives to meet many of Tanzania's current agricultural needs.

REFERENCES

Baker, A. 1940. The laboring earth. Heath Cranton Ltd., London. 216 p.

Balfour, E. B. 1943. The living soil. Faber and Faber, London. 246 p.

Barlow, K. E. 1942. The discipline of peace. Faber and Faber, London. 214 p.

Bergh, P. H. 1981. Ecological agriculture in Minnesota. B.A. thesis, unpublished. Wesleyan University, Middletown, Conn. 247 p.

Berry, W. 1977. The unsettling of America. Sierra Club Books, San Francisco, Calif. 228 p.

Besson, J. M. and H. Vogtmann (ed.). 1978. Toward a sustainable agriculture. IFOAM, Oberwil, Switzerland. 243 p.

Billington, E. 1942. Compost for the garden plot or 1,000-acre farm. Faber and Faber, London. 88 p.

Boeringa, R. (ed.). 1980. Alternative methods of agriculture. Developments in agricultural and managed-forest ecology 10. Elsevier Scientific Publishing Co., Amsterdam. 199 p.

Boucher, J. 1968. Precis de culture biologique. Methode Lemaire-Boucher agriculture et vie. Angers, 4th edition.

Breimyer, H. 1980. Economics of organic agriculture. Paper #1980-35. Univ. of Missouri, Columbia, Mo. 6 p.

Bromfield, L. 1946. Pleasant valley. Harper and Bros., N.Y.

———. 1947. Malabar farm. Ballantine Books, N.Y. 470 p.

———. 1950. Out of the earth. Harper and Bros., N. Y. 305 p.

———. 1955. From my experience. Harper and Bros., N.Y. 355 p.

Browne, D. 1855. The field book of manures or the American muck book. C.M. Saxton and Co., N.Y. 422 p.

Bruce, M. 1943. From vegetable waste to fertile soil. Faber and Faber, London.

———. 1945a. Common sense compost making. Faber and Faber, London. 93 p.

———. 1945b. Quick return method of compost making. Rodale Press Inc., Emmaus, Pa. 92 p.

Burns, T. and C. Campbell (ed.). 1979. Practical alternatives to chemicals in agriculture. Univ. of Regina, Saskatchewan, Canada. 196 p.

Cocannouer, J. 1950. Weeds, guardians of the soil. Devin-Adair, N.Y. 179 p.

———. 1954. Farming with nature. Univ. of Oklahoma Press, Norman, Okla. 147 p.

———. 1958. Water and the cycle of life. Devin-Adair, N.Y.

Committee for Research Into Biological Methods of Agriculture. 1976. Alternative lanbouw methoden. Centre for Agricultural Publishing and Documentation (PUDAC), Wageningen, The Netherlands.

Conacher, A. and J. Conacher. 1982. Organic farming in Australia. Univ. of Western Australia. 64 p.

Darwin, C. 1882. The formation of vegetable mould through the action of worms, with observations of their habits. D. Appleton & Co., N.Y. 326 p.

Donaldson, E. 1961. Approach to farming. Faber and Faber, London. 248 p.

Edens, T. C. and H. Koenig. 1980. Agroecosystems management in a resource-limited world. Bioscience. 30(10):697-701.

Elliot, R. H. 1907. The Clifton Park system of farming. Faber and Faber, London. 261 p.

Faulkner, E. 1943. Plowman's folly. Grosset and Dunlap, N.Y. 155 p.

———. 1946. Uneasy money. Univ. of Oklahoma Press, Norman, Okla.

———. 1947. A second look. Univ. of Oklahoma Press, Norman, Okla. 193 p.

———. 1952. Soil development. Univ. of Oklahoma Press, Norman, Okla. 232 p.

Fletcher, S. 1907. Soils: how to handle and improve them. Doubleday, Page and Co., N.Y. 438 p.

Fukuoka, M. 1978. One straw revolution: an introduction to natural farming. Rodale Press Inc., Emmaus, Pa. 181 p.

Gonsalves, J. F. 1982. Trainer's guide to small-scale biointensive food production: the French intensive biodynamic method. Dept. of Agric. Ed. and Ext., Univ. of Dar es Salaam, Morogoro, Tanzania.

Graham, M. 1941. Soil and sense. Faber and Faber, London. 274 p.

Hainsworth, P. 1954. Agriculture, a new approach. Faber and Faber, London. 248 p.

Hanley, P. (ed.). 1980. Earthcare: ecological agriculture in Saskatchewan. Earthcare Information Center, Saskatchewan, Canada. 236 p.

Harwood, R. R. 1983a. Organic farming research at the Rodale Research Center. Presented at Symposium on Organic Farming: Current Technology and Its Role in a Sustainable Agriculture. Atlanta, Ga. November 30, 1981. (in press).

———. 1983b. A regenerative approach to agriculture in the year 2000. Presented at Mid-Atlantic Regional Meeting of the American Chemical Society. White Haven, Pa. April 6, 1983. (in press).

———. 1983c. Why science wears blinders. The New Farm. 5(2):38-39.

Henderson, G. 1960. The farming manual. Faber and Faber, London.

Hill, S. B. 1983. Organic farming in Canada. Presented at Canadian Committee on Land Resource Services of Agriculture Canada. Saskatoon, Saskatchewan, Canada. November 9, 1982. (in press).

Hill, S. and P. Ott (ed.). 1982. Basic technics in ecological farming and the maintenance of soil fertility. IFOAM, Birkhauser Verlag, Switzerland. 365 p.

Howard, A. 1943. An agricultural testament. Oxford Univ. Press, London. 253 p.

———. 1945. Farming and gardening for health or disease. Faber and Faber, London.

———. 1946. The war in the soil. Rodale Press Inc., Emmaus, Pa. 96 p.

———. 1947. The soil and health: a study of organic agriculture. Devin-Adair, N.Y. 307 p.

Howard, L. E. 1947. The earth's green carpet. Rodale Press Inc., Emmaus, Pa. 258 p.

Howard, A. and Y. D. Wad. 1931. The waste products of agriculture. Oxford Univ. Press, London. 167 p.

Jackson, W. 1980. New roots for agriculture. Friends of the Earth, San Francisco, Calif. 155 p.

Jeavons, J. 1979. How to grow more vegetables than you ever thought possible on less land than you can imagine. Ten Speed Press, Palo Alto, Calif. 159 p.

Jenks, J. 1959. The stuff man's made of. Faber and Faber, London.

Kiley-Worthington, M. 1981. Ecological agriculture: what it is and how it works. Agriculture and Environment. 6:349-381.

King, F. C. 1943. The compost gardener. Titus Wilson and Son Ltd., Kendal, England. 90 p.

King, F. H. 1911. Farmers of forty centuries. Rodale Press Inc., Emmaus, Pa. 441 p.

———. 1914. Soil management. Orange Judd Co., N. Y. 311 p.

Koepf, H. H. 1981. The principles and practice of biodynamic agriculture. p. 237–250. *In* Stonehouse, B. (ed.). Biological husbandry. Butterworths, London.

Koepf, H. H., B. Pe erson and W. Schaumann. 1976. Biodynamic agriculture: an introduction. Anthroposophic Press, Spring Valley, N.Y. 429 p.

Kolisko, E. and L. Kolisko. 1939. Agriculture of tomorrow. Kolisko Archive Publication, Bournemouth, England. 322 p.

Kor ., B. Snyder and M. Musick (ed.). 1982. The future is ndant: a guide to sustainable agriculture. Tilth, Argton, Wash. 192 p.

raten, S L. 1979. A preliminary examination of the economic performance and energy intensiveness on organic and conventional small grain farms in the Northwest. M.S. thesis, unpublished. Washington State Univ., Pullman, Wash.

Lockeretz, W. (ed.). 1983. Proc. of 4th International Federation of Organic Agriculture Movements (IFOAM) Conference. Cambridge, Mass. August 18–20, 1982. (in press).

Lockeretz, W., G. Shearer and D. Kohl. 1981. Organic farming in the Corn Belt. Science. 211:540–546.

Lockeretz, W. and S. Wernick. 1979. Organic farming: a step toward closed nutrient cycles. Compost Sci./Land Util. 21(2):40–46.

———. 1980. Commercial organic farming in the Corn Belt in comparison to conventional practices. Rur. Soc. 45(4):709–722.

Maher. D. 1982. The applicability of organic agriculture to the immediate and long-term needs of the Arusha region, Tanzania. Development Alternatives Inc.

Merrill, R. (ed.). 1976. Radical agriculture. Harper and Row, N.Y. 459 p.

Minnich, J. and M. Hunt (ed.). 1979. The Rodale guide to composting. Rodale Press Inc., Emmaus, Pa. 405 p.

Muller, M. 1969. Prektische anleitung zum organisch-biologischen gartenbau. Schweiz. Baurern-Heimtschule mit der treich Lanbauschrie fur die organisch-biologische Wirtschaftsweise Morchberg, Groseshochstetten, 2nd edition.

Northburn, Lord. 1940. Look to the land. Dent, London.

Oelhaf, R. C. 1978. Organic agriculture: economic and ecological comparisons with conventional methods. Allanheld, Osmun & Co., Montclair, N.J. 271 p.

Olson, K. D., J. Langley and E. O. Heady. 1982. Widespread adoption of organic farming practices: estimated impacts on U.S. agriculture. J. Soil and Water Cons. 37(1):41–45.

Oyler, P. 1950. The generous earth. Hodder and Stoughton.

Pank. C. J. 1976. Dirt farmer's dialogue, twelve discussions about biodynamic farming. Bio-dynamic Press, Sprakers, N.Y. 133 p.

Papendick, R. I., L. L. Boersma, D. Colacicco, J. M. Kla, C. A. Kraezle, P. B. Marsh, A. S. Newman, J. F. Parr, J. B. Swan and I. G. Youngberg. 1980. Report and recommendations on organic farming. Sci. and Educ. Admin., USDA, Beltsville, Md. 94 p.

Parr, J. F., R. I. Papendick and I. G. Youngberg. 1983. Organic farming in the U.S.: principles and perspectives. Agro-Ecosystems. 8:183–201.

Patriquin, D., D. Burton and N. Hill. 1981. Strategies for achieving self-sufficiency in nitrogen on a mixed farm in eastern Canada based on the use of the faba bean. p. 651–671. *In* Lyons, J., R. Valentine, D. Phillips, D. Rains and R. Huffaker (ed.). Genetic engineering of symbiotic nitrogen fixation and conservation of fixed nitrogen. Plenum Publishing Corp., N.Y.

Patten, A. G. 1982. Comparison of nitrogen and phosphorus flows on an organic and conventional farm. M.S. thesis, unpublished. Washington State Univ., Pullman, Wash.

Pauli, F. W. 1967. Soil fertility: a biodynamic approach. Adam Hilger Ltd., London. 204 p.

Petterson, B. and E. Wistinghausen. 1979. Effects of organic and inorganic fertilizers on soils and crops. Results of a long-term field experiment in Sweden. Misc. Publ. #1. Woods End Agricultural Institute, Temple, Maine. 44 p.

Pfeiffer, E. 1934. New methods in agriculture and their effects on foodstuffs: the biodynamic method of Rudolf Steiner. Rudolf Steiner Publishing Co., London.

———. 1943. Biodynamic farming and gardening. Soil fertility renewal and preservation. Anthroposophic Press, N.Y. 240 p.

———. 1947. The earth's face and human destiny. Rodale Press Inc., Emmaus, Pa. 184 p.

——— 1956. Biodynamics: three introductory articles. Biodynamic Farming and Gardening Association, Wyoming, R.I. 40 p.

Poirot, E. 1978. Our margin of life. Acres USA, Raytown, Mo. 139 p.

Pratt, M. (ed.). 1979. Proc. of the Prince Edward Island Conference on Ecological Agriculture. Institute of Man and Resources, Charlottetown, Prince Edward Island, Canada. 196 p.

Rateaver, B. and G. Rateaver (ed.). 1973. A condensation of biodynamic farming and gardening. Rateaver, Pauma Valley, Calif. 115 p.

Rifkin, J. 1983. Algeny. Viking Press, N.Y. 298 p.

Roberts, I. 1907. The fertility of the land. Macmillan Publishing Co., N.Y. 415 p.

Roberts, K. J., E. Warnken and K. C. Schneeberger. 1979. The economics of organic crop production in the western Corn Belt. Dept. of Agricultural Economics paper #1979-6. Univ. of Missouri, Columbia, Mo.

Rodale, J. I. 1945. Pay dirt. Rodale Press Inc., Emmaus, Pa. 242 p.

———. 1948. The organic front. Rodale Press Inc., Emmaus, Pa. 199 p.

———. 1953. The organic method on the farm. Organic Farmer #41. Rodale Press Inc., Emmaus, Pa. 128 p.

———. 1954. Organic merry-go-round and an organic trip to England. Rodale Press Inc., Emmaus, Pa. 95 p.

———. 1960. The complete book of composting. Rodale Press Inc., Emmaus, Pa. 1,007 p.

———. 1977. Organic gardening: how to grow healthy vegetables, fruits and flowers using nature's own methods. Rodale Press Inc., Emmaus, Pa. 224 p.

Rodale, R. 1983. Breaking new ground: the search for a sustainable agriculture. The Futurist. 1(1):15-20.

Rusch, H. P. 1955. Naturwissenschaff von Morgen. Emil Hartman, Kusnacht, Zurich.

Seifert, A. 1952. Compost. Faber and Faber, London.

Smith, J. (ed.). 1980. Organic and conventional farming compared. Council for Agricultural Science and Technology. #84. Ames, Iowa. 32 p.

Steiner, R. 1958. Agriculture: a course of eight lectures. Biodynamic Agriculture Association, London. 175 p.

Stonehouse, B. 1981. Biological husbandry: a scientific approach to organic farming. Butterworths, London. 352 p.

Skyes, F. 1949. Humus and the farmer. Rodale Press Inc., Emmaus, Pa. 393 p.

———. 1951. Food, farming and the future. Faber and Faber, London. 294 p.

———. 1959. Modern humus farming. Rodale Press Inc., Emmaus, Pa. 270 p.

Turner, N. 1955. Fertility pastures. Faber and Faber, London.

Vogtmann, H. 1981. The quality of plant foods. The Ecologist. 11(4):169-173.

Waksman, S. 1936. Humus: origin, chemical composition and importance in nature. Williams and Wilkins Co., Baltimore, Md. 526 p.

Walters, C. Jr. and C. J. Fenzau. 1979. An Acres USA primer. Acres USA, Raytown, Mo. 464 p.

Werwick, S. and W. Lockeretz. 1977. Motivations and practical organic farmers. Compost Sci. 18(6):20-24.

Wickenden, L. 1949. Make friends with your land: a chemist looks at organiculture. Devin-Adair, N.Y. 132 p.

Wolf, R. (ed.). 1977. Organic farming: yesterday's and tomorrow's agriculture. Rodale Press Inc., Emmaus, Pa. 344 p.

Woodward, L. (ed.). 1983. Research projects in biological agriculture in western Europe and the U.S. Elm Farm Research Centre report #2. Great Britain. 104 p.

Wrench, J. T. 1956. Reconstruction by way of the soil. Faber and Faber, London. 262 p.

DISCUSSION

International Overview of Regenerative Agriculture

Q: (Jana, University of Dar es Salaam): In your paper, you discussed the origin and development of organic farming mainly in the United States and Europe, with very little reference to China. Why did you not consider developing countries?

A: (Harwood, Rodale Research Center): Farming systems of developing countries are traditionally closer to organic farming, so there would be very little to discuss in the way of origin and development.

Q: (Jana): Can you clarify the differences between organic farming, alternative farming and conventional farming?

A: (Harwood): The terms have been redefined. In developing countries, conventional agriculture implies organic farming.

Q: (Jana): The farming systems of developed countries are based on extensive use of chemicals, resulting in high yields. How does this compromise with the lower yields likely to be obtained under alternative farming systems?

A: (Harwood): Production as conceived under the Green Revolution works if you continue adding large amounts of inputs. However, we have realized that alternative farming systems can produce comparable or even higher yields.

Q: (Naburi, SUDECO): The concept of organic farming is ideally thinking backwards, thinking of the harmful effects of chemicals, etc. Tanzania is in a hurry to produce enough food for its hungry people, including myself. How do we change the preconceived idea that use of inorganic fertilizers is the quickest way of doing this?

A: (Harwood): We do not advocate complete abstinence from inorganic fertilizers. The full answer to your question will be given in the next paper, which discusses organic farming in Tanzania.

Q: (Mukurasi, UYOLE Agricultural Center): Ever since the publication of "Silent Spring," a number of changes have taken place resulting in different groups in the two extremes. What is the clear concept of organic versus conventional farming?

A: (Harwood): We are talking of middle-of-the-road philosophy.

Q: (Kapande, MATI, Ukiriguru): Rotation with legumes has been taken as a method of reducing production costs in maize through the use of residual nitrogen, so that addition of inorganic nitrogen is not necessary. The fertilizer recommendation for maize is 40 kilograms or more of nitrogen per hectare. Is it possible to get this amount from rotation of maize with groundnuts?

A: (Harwood): Alfalfa crop leaves a much higher residual nitrogen. With enough power, rotation with alfalfa is quite efficient in the Temperate areas. But in the Tropics, tree/cereal rotation may be more efficient in recycling nutrients. We are not sure how much nitrogen would be available from a groundnut crop in a groundnut/maize rotation.

Mrs. Zuberi, Horticulture Tengeru, observed that she had read the Rodale guide to small farmers and felt that it was applicable to Tanzania. She felt it appropriate at this workshop to emphasize organic farming and discourage the destructive habits of burning and overuse of chemicals.

ORGANIC FARMING IN TANZANIA

J.N.R. Kasembe, Tanzania Agricultural Research Organization, P.O. Box 9761, Dar es Salaam
J.M.R. Semoka, Dept. of Soil Science, University of Dar es Salaam
J.K. Samki, Tanzania Agricultural Research Organization, Mlingano, Private Bag Ngomeni, Tanga

Recently, there has been renewed interest in the use of organic materials as sources of nutrients for crop production. This was triggered by the energy crisis which sent the prices of oil and its products skyrocketing. Developing countries have been hit harder by the energy crisis than developed countries, and any serving in resources is very much desired. In the developed countries, the interest in manure use in agriculture is also aimed at solving the problem of waste disposal from the livestock industry (Pratt *et al.*, 1973; Oosthoek, 1982).

Tanzania has a large number of livestock, and efficient use of the waste products of these animals could supplement the use of inorganic fertilizers to an appreciable extent. Even where livestock numbers are limited, the possibility of organic farming exists through the use of other organic wastes, such as kitchen garbage or refuse, animal wastes from slaughterhouses, crop residues such as cereal stalks, and other wastes such as sisal wastes, coconut husks, etc. However, it must be emphasized from the start that the role of organic materials in agriculture at the national level will be to supplement the inorganic fertilizers rather than to replace them. This does not pre-empt the possibility in some districts of heavier dependence on organic materials than on inorganic fertilizers.

Benefits from the Use of Organic Materials

Manures and compost have a number of benefits which make them attractive for agricultural use, especially these days, when most countries are facing economic difficulties.

First, manures and compost provide a cheap source of plant nutrients which does not involve the use of foreign exchange. In many parts of Tanzania today, manures can be obtained free of charge, and one needs only to meet the transport costs. This situation is, however, likely to change when the use of manure and the benefits accruing from its use become widely appreciated. Even then, the cost may still be less than that of inorganic fertilizers.

Second, manures supply almost all the nutrient elements required by plants. It must be emphasized that the nutrient contents of manures are highly variable, and the figures quoted in Table 1 are provided as a general guide. It is proper to estimate the nutrient content of each manure source before it is used. Manures also supply all micronutrients, but reliable data for these elements are not yet available. Therefore, the use of manure is useful in correcting multiple deficiencies, including undiagnosed deficiencies of some nutrients.

Manures also have more pronounced residual effects, even with respect to N, because a large proportion of the nutrients are present in organic combinations, and are therefore released slowly.

In addition, manures and compost are known for their contribution in improving the physical properties of soils, such as soil structure, water-holding capacity, water infiltration, etc. Improvement of these properties leads to soil and water conservation, and hence increases crop production.

Table 1: **Average Nutrient Content of Manure From Different Species of Animals.**

Type of animal	N	P	K	Ca	Mg	S
	percent in air-dried samples					
Cow	0.5	0.2	0.5	1.1	0.2	0.1
Goat	0.4	0.2	0.7	0.9	*	*
Sheep	1.3	0.4	1.0	2.5	0.8	0.5
Chicken	1.3	0.8	0.3	1.7	0.3	0.6
Pig	0.4	0.3	0.3	*	*	*

*No reliable data is available.
Source: Modified from Uriyo *et al.*, 1979.

Problems Associated with Manure and Compost Use

Manure and compost have a number of limitations which should be carefully taken into consideration if their use is to be successful. Manure and compost contain very low amounts of nutrients per unit weight, and thus, to satisfy the requirements of crops, large quantities must be used. Studies carried out on the nutrient contents of manure and compost used in western Tanzania are given in Table 2.

Several tons of the materials per hectare are required, and often they cannot be profitably used far away from the source, because transport costs become prohibitive. Le Mare (1959) estimated that the manures can only be used profitably within a 40-kilometer radius of the source. Since transport costs have increased tremendously ever since, at present, the distance may not be greater than 10 kilometers. The large quantities to be handled call for simplified and less tedious methods of transporting and incorporating the manure.

Nutrient imbalances are often encountered with the use of manures. The element frequently quoted as being out of balance is phosphorus, and this is due to the low amount present and the slow rate of release from organic forms.

Types of Organic Farming Practices in Tanzania

The organic farming practices used in Tanzania revolve around the types of organic materials used, the most common being the application of animal manures on agricultural land. The manure used, especially in those areas with large numbers of livestock, is usually accumulated in open kraals (bomas). This practice is common in Mwanza, Shinyanga, Mara, Arusha, Tabora, Singida and Dodoma regions. The manure may accumulate in the kraal for several years without being removed, and thus is usually in various states of decomposition. As a result of this, the nutrient content is also very variable. In most of these areas, manure is used on both annual food and cash crops.

A similar practice in terms of use, but different in the way manure is handled, is found in areas of high population density and low livestock numbers. In areas such as Hai, Moshi Rural, Rombo, Same, Arumeru, Rungwe, Bukoba, and Mjombe districts, and Ukara Island, animals are fed by zero grazing. Thus, all the dung and beddings, together with the remains of fodder, are piled up for some time and eventually applied to the field. This is, in essence, compost. But unfortunately, in most cases, no efforts are made to improve the nutrient content of the piles or to reduce the losses which are likely to occur during decomposition. Compost in these areas is used on both annual and perennial crops.

In the above cases, it is difficult to quantify the amounts of manure and compost used and the benefits accruing from their use. However, whereas in areas of high population density almost all the manures are utilized, only a small fraction is used in areas of high livestock numbers. Maher (1982) reported that, in the drier parts of the Arusha region, the practice is to apply small amounts of manure over a large area of land. It would be more beneficial, and the results more convincing to the farmers, if the amount available was concentrated on a small area to serve as a demonstration.

Another type of organic farming, and certainly the most commonly used, is the practice of intercropping legumes with other crops. The common legumes used as intercrops are beans, cowpeas, pigeon peas, groundnuts, bambara nuts, broadbeans and chicken peas, the first four being the most common. Recently, the practice of intercropping has been extended to forestry, where it is termed agroforestry. The basic principle of this practice is to grow trees with some food crops.

Although this practice must certainly have some benefits, they are difficult to quantify. The

Table 2: **Nitrogen, Phosphorus and Potassium Contents of Some Manures and Compost in Tanzania.**

Manure/Compost Source	N	P	K
		percent in air-dry sample	
Ukiriguru open kraal manure with crop residues	0.58 to 0.74	0.16 to 0.23	0.83 to 1.03
Farmyard manure made in a covered yard	1.50	0.30	
Manure from peasant open kraals without crop residues	0.53 to 0.85	0.25 to 0.42	1.31 to 2.22

amounts of nutrients contributed by the legumes are, in most cases, limited, particularly because the usual practice is to remove the crop residues from the field and thresh them elsewhere. Hence, only a small amount of organic materials coming from roots and leaves contributes to nutrient recycling in the system.

The fourth type of organic farming which merits discussion is the deliberate incorporation of crop residues into the cultivated land. This is practiced mainly on large farms like the wheat complex in the Hanang district, and some of the rice farms such as Mbarali. In the wheat complex, special cultivation equipment like the chisel plow is used for incorporating crop residues partially into the soil. This practice serves as a soil conservation measure, and helps improve nutrient supply. In Mbarali rice farm, limited rotation involving soybeans is practiced in some fields after a few years of rice cultivation. The soybean straw is incorporated into the soil after harvest. Attempts to incorporate rice straw have also been made, but were discontinued due to pest and disease problems (Kikaho, 1982, personal communication). Small farmers in some parts of Tanzania also carry out the practice of incorporating organic residues into the soil, for example, in the Ngoro system of the Matengo.

In addition, there is the use of mulches. This practice is commonly used on perennial crops, such as bananas, coffee and tea. In coffee, mulch is applied uniformly over the entire surface and has proved to be beneficial in areas with sub-optimal rainfall (Acland, 1970). The amount of mulch used varies, depending on availability, but rates ranging from 5 tons to 10 tons per hectare have been used in Tanzania.

In bananas, mulch may be applied uniformly or around each stool, leaving the inter-row spaces bare. This practice is more familiar because less mulch is used.

Results From Studies on the Use of Organic Materials

A number of experiments employing organic materials were conducted between 1950 and the early 1970s (Evans and Mitchell, 1962; Peat and Brown, 1962; Scaife, 1968; 1971). In many of these experiments, treatments testing different combinations of inorganic fertilizers and manures were also included for purposes of comparison. Some of the results obtained are summarized in Table 3.

It is evident from Table 3 that manure application increased yields, but that a combination of manure and inorganic fertilizers gave the highest yields in all cases. This suggests that the two materials complement each other. Probably, the inorganic fertilizers correct imbalances of nutrients inherent in manures, whereas manures supply other nutrients bordering on deficiency. The nutrient element often reported as being out of balance with others in manures is phosphorus, but the results of Evans and Mitchell (1962) showed that N was also inadequate. This was probably attributed to slow release of N from manures which have stayed in kraals for too long. Castellanos and Pratt (1981) observed that very old manures released very little N, and in fact caused immobilization of N during the first few weeks after incorporation into the soil.

Responses from manure application have been obtained with other crops as well. Peat and Brown (1962) applied manure to cotton every three years at the rate of 15 tons per hectare and obtained an average response over a nine-year period of about 550 kilograms per hectare per year. Scaife (1968) showed that manure applied on cotton at the rate of 7.5 tons per hectare resulted in significant increases in seed cotton yield. Other crops which have given positive results with manures are groundnuts (Scaife, 1971) and pigeon peas (Evans and Mitchell, 1962). These results show clearly that manures and compost increase yields of dif-

Table 3: **Effects of Manure and Inorganic Fertilizers on Maize Yield (kilograms per hectare) in Different Parts of Tanzania.**

Treatment	Mwanhala, Nzega*	Maruku, Bukoba	Urambo, Tabora
Control	1,152	495	1,000
Manure**	1,751	1,282	1,400
Inorganic fertilizers	2,369	2,022	1,500
Manure & inorganic fertilizer	2,777	2,478	1,900

*The data for Mwanhala is a mean of three years, the others are for one year.

**Rates of manure were 7.5 tons per hectare per year at Mwanhala and 25 tons per hectare per year at Maruku and Urambo.

Source: Scaife, 1971; Evans and Mitchel, 1962

ferent crops, and sustain the fertility and productivity of the land. They also show that supplementing manures with inorganic fertilizers increases yields even further.

Data on the effects of different rates of manure on yields are limited. Scaife (1971) provides some data on this aspect as shown in Table 4. Both crops responded to manures up to 15 tons per hectare, but there was a tendency toward leveling off for groundnuts. The data for maize suggest that higher rates may still increase yields.

Manures, compost and mulch are known to sustain good yields of bananas and coffee, as has been observed in Kilimanjaro, Arumeru and Bukoba, where some farmers have grown these crops for decades using these materials only. Evans and Mitchell (1962) observed that, when changing from shifting cultivation to permanent cropping on "Rweya" infertile soils of Bukoba, cattle manure played a very significant role in the establishment of bananas. Therefore, although quantitative data are lacking from peasant production, there is enough circumstantial evidence to support the hypothesis that organic materials have been beneficial in maintaining the productivity of these soils.

Table 4: **Effect of Manure Rates on the Yield of Maize and Groundnuts.**

Rate	Maize	Groundnuts
tons per hectare	*kilograms per hectare*	
0	492	532
3.75	1,295	954
7.5	2,295	1,250
15.0	3,167	1,449

Future Strategy

In order to increase the role of manures and compost in the agricultural production of the country, the following strategies are suggested:

1) Although the country has a big reservoir of organic materials, very little of this is being used, mainly because of lack of awareness of the usefulness of this resource. Demonstrations showing how to use manure and compost, and the benefits accruing from their use, should be emphasized in this campaign.

2) People should be exposed to improved methods of making compost, so that nutrient losses are reduced and maximum benefit obtained from them. Alternative materials for making compost, such as wastes from slaughterhouses, sisal wastes, garbage, sawdust, cotton stalks, maize cobs, maize stalks, etc., should be emphasized to show the wide applicability of this farming practice. Until now, only animal manure and, to a lesser extent, manure mixed with animal bedding materials have been utilized.

3) Easier means of transport and spreading, such as the use of oxcarts and "mikokoteni," will lead to greater use of the materials.

4) Research on the long-term implications of both organic materials and inorganic fertilizers should be continued by our research institutions to equip the nation with the information necessary for the better utilization of these resources.

Summary and Conclusions

It is evident that organic farming has an important role to play in the agricultural development of Tanzania. This approach can be combined advantageously with the use of inorganic fertilizers. From the data available, tentative application rates of manure and compost of 5 tons to 10 tons per hectare per year, or 10 tons to 20 tons per hectare every other year, are suggested. This recommendation would be improved as more data become available, by developing rates based on ecological zones, as has been done for inorganic fertilizers by Samki *et al.* (1981).

REFERENCES

Acland, J. D. 1970. East African crops. FAO publication.

Castellanos, J. Z. and P. F. Pratt. 1981. Mineralization of manure nitrogen: correlation with laboratory indices. Soil Sci. Soc. Am. J. 45:354-357.

Evans, A. C. and H. W. Mitchell. 1962. Soil fertility studies in Tanganyika. I. Improvement to crop and grass production on a leached sandy soil in Bukoba. E. Afr. Agric. For. J. 27:189-196.

Le Mare, P. 1959. Soil fertility studies in three areas of Tanganyika. Emp. J. Expt. Agric. 27:220.

Maher, D. 1982. Applicability of organic agriculture to immediate and long-term needs of the Arusha region. Report submitted to the Arusha Planning and Village Development Project. Arusha, Tanzania.

Oosthoek, J. 1982. Composting in the Netherlands: refuse composition and compost. *In* Schelhaas, R. M. (ed.). Soil waste disposal and utilization in developing countries.

Peat, J. E. and K. J. Brown. 1962. The yield responses of rain-grown cotton at Ukiriguru in the Lake Province of Tanganyika I. The use of organic manures, inorganic fertilizers and cotton seed ash. Emp. J. Expt. Agric. 30:215.

Pratt, P. F., F. E. Broadbent and J. P. Martin. 1973. Using organic wastes as nitrogen fertilizers. California Agriculture. June 1973.

Samki, J. K., J. F. Harrop, H. C. Dewan and F. Miany. 1981. Fertilizer recommendations related to ecological zones in Tanzania. Unpublished report. National Soil Service, Agricultural Research Institute, Mlingano, Tanga.

Scaife, M. A. 1968. The effect of a cassava fallow and various manurial treatments on cotton at Ukiriguru, Tanzania. E. Afr. Agric. For. J. 33:231-[illegible]

———. 1971. The long-term effects of fertilizers, farmyard manure and leys at Mwanhala, western Tanzania. E. Afr. Agric. For. J. 37:8-14.

Uriyo, A. P., H. O. Mongi, M. S. Chowdhury, B. R. Singh and J. M. R. Semoka. 1979. Introductory soil science. T.P.H., Dar es Salaam.

DISCUSSION

Organic Farming in Tanzania

(Comment by Kapande, MATI, Ukiriguru): Abrupt emphasis on the use of organic manures may lead to other prohibitive problems, such as weed problems which discouraged farmers in Dodoma from using farmyard manure. He suggested that the use of organic manure should be taken on a small scale, for example, by regions in order to assess problems that might arise.

A: (Kasembe): Political forces in the country may not accept small-scale applications, because it is being taken as a national priority.

(Comment by Ngeze, CCM chairman, Kagera): He congratulated the authors for an excellent paper on organic farming and reiterated that this was not new in Tanzania. In "Siasa Ni Kilimo" (1972), it was emphasized that farmers should not continue to rely on inorganic fertilizers. This was not taken up. He added that the involvement of the President and the Secretary General of CCM in this workshop will give the program political support, hence, its implementation. He suggested that, although the paper had shown that combinations of inorganic and organic fertilizers gave higher yields, we should start using organic manures immediately.

(Response, Kasembe): Thanked Mr. Ngeze for his comments and explained that Mr. Ngeze was the pioneer of organic farming in Tanzania, and had published a book on "Mbolea ya takataka," which was available for sale. He explained that the established fact that a combination of organic and inorganic fertilizers gave better yields was optional to use.

(Comment by Kapinga, USAID, Dar es Salaam): The emphasis on organic manures has overlooked certain facts about farmers. He said that available information indicates that only about 7 percent of farmers use inorganic fertilizers, 11 percent use farmyard manure, 3 percent use green manures, 25 percent use by-products, and 50 percent use mulches. He emphasized that this kind of information should be taken into consideration when drawing up strategies for implementation.

(Response, Kasembe): The Farming Systems Research Project, due to start later this year, will take all the farmer-related facts into consideration and will provide more data from villages. As a follow-up to this workshop, the Director of Extension Services in the Ministry of Agriculture

has requested a meeting of research, Extension, and agriculture training staff to discuss ways of implementing the recommendations.

Q: (Lwoga, University of Dar es Salaam): Pasture and fodder legumes fix 70 to 90 kilograms of nitrogen per hectare per year. There is a big potential in these legumes. Are they being considered in crop production?

A: (Kasembe): The potential of pasture and fodder legumes has been realized. For example, sunhemp (marijea) has been noted as an efficient nitrogen fixer and cover crop, and is being used even in our demonstrations. Others will also be considered on their own merits.

Mrs. Mutagwaba, MATI, Mbeya, observed that the problem of alternative uses of cow dung in some areas was diverting its use as farmyard manure. This is commonly practiced in Sukumaland and in Dodoma, where cow dung is used as firewood. She also wanted some clarification on the use of the terms "mboji" and "samadi."

A: (Semoka): "Mboji" means compost, "samadi" means manure.

(General comment by Jana, University of Dar es Salaam): Referring to Mr. Naburi's earlier equestion, Jana suggested that we must distinguish between peasant farmers and large farmers. The workshop has emphasis on small farmers. Large farmers must continue to ensure their own self-sufficiency in food production. However, overuse of chemicals should be discouraged, as they may have harmful effects on the land and crops.

ROLE OF LIVESTOCK IN ORGANIC FARMING

M. L. Kyomo, Faculty of Agriculture, Forestry and Veterinary Science, University of Dar es Salaam
A. Chagula, Ministry of Livestock Development. Dar es Salaam

Animal excreta have had four principal uses: fuel, fertilizer, animal feed, and building material. In dried form, the dung of cattle, donkeys, horses and water buffalo is used as fuel for cooking or heating, not only in Africa, but also in the Near and Middle East and parts of Asia.

In recent years, methods have been developed for producing methane gas from manure. This gas is then used as fuel for various purposes, including the production of electricity. Feeding dried cow dung to pigs and poultry, and vice versa, is becoming common in several countries. In this paper, we hope to show the amount of farmyard manure produced in Tanzania, how it is being used and how to make a large proportion of it available for crop production.

Table 1: **Livestock Count by the Ministry of Agriculture (Tanzania Mainland Only), 1978**

Region	Cattle[1]	Goats[2]	Sheep[3]
	x1000	*x1000*	*x1000*
Arusha	2,026	1,505	1,102
Coast	100	20	5
Dar es Salaam	3	2	0.3
Dodoma	1,028	449	225
Iringa	487	182	102
Kagera	454	196	55
Kigoma	67	73	33
Kilimanjaro	414	434	247
Lindi	7	8	7
Mara	1,036	324	253
Mbeya	837	101	68
Morogoro	262	91	53
Mtwara	11	63	6
Mwanza	1,144	399	277
Rukwa	184	36	21
Ruvuma	36	55	13
Shinyanga	1,653	594	485
Singida	778	446	249
Tabora	995	281	212
Tanga	511	274	152
Total	*12,032*	*5,533*	*3,565*

Growth per year: [1]Cattle 2.3% [2]Goats 2.2% [3]Sheep 1.9%

Livestock Numbers in Tanzania and Estimated Production of Manure

The 1978 Tanzania Mainland Livestock Census by the Ministry of Agriculture (1979), revealed that Tanzania had 12 million head of cattle, 5.5 million goats and 3.6 million sheep. FAO (1976) has estimated that Tanzania had, in addition, about 62,000 pigs and about 22 million chickens. The country also has about 420 horses.

Because the offtake for livestock are small, about 9 percent for cattle, 26 percent for goats and 25 percent for sheep, we can assume that the number of livestock is rising.

Table 1 shows the number of cattle, goats and sheep per region in Tanzania Mainland. From the knowledge of amount of food eaten, digestibility percentage, amount undigested and rejected through the digestive system, and from the amount of water ingested and passed out as urine, we can calculate the amount of dung available for fertilization of fields (Taiganides, 1977). See Table 2.

Manure output will vary with the system of livestock production, the most common of which is the semi-intensive system in Tanzania. The animals roam the rangeland or the areas surrounding the homesteads during the day, and are penned at night. It is assumed, therefore, that only about 50 percent of the feces can be collected.

However, in dairy systems, which form a small percentage of the total cattle population, and in commercial pig and poultry enterprises, animals are confined day and night. Here, a high proportion of manure can be collected.

Out of 12 million head of cattle, we assume 50 percent are mature cows, and 3 percent are mature bulls. The rest are weaners and calves. If two of these equal one mature cow, then Tanzania would have 9 million mature cattle. Taiganides

Table 2: **Estimated Output of Livestock Manure Per Region of Mainland Tanzania**

Region	Cattle[1]	Goats[2]	Sheep[3]
	amount of manure in metric tons		
Arusha	2,737,500	349,325	402,230
Coast	136,875	73,000	1,825
Dar es Salaam	4,197	730	110
Dodoma	1,407,075	163,885	82,125
Iringa	667,950	66,430	37,230
Kagera	622,325	71,540	20,075
Kigoma	93,075	26,645	12,045
Kilimanjaro	565,575	158,410	90,155
Lindi	10,950	2,920	2,555
Mara	1,418,025	118,260	92,345
Mbeya	1,146,100	36,865	24,820
Morogoro	359,525	33,215	19,345
Mtwara	16,425	22,995	2,190
Mwanza	1,018,350	145,635	101,105
Rukwa	251,850	13,140	7,665
Ruvuma	21 900	20,075	4,745
Shinyanga	2,264,825	216,810	177,025
Singida	1,065,800	162,790	90,885
Tabora	1,363,275	102,565	77,380
Tanga	700,800	100,010	55,480
Total	*15,872,397*	*1,885,245*	*1,220,335*

[1]Based on output of 5 kg of manure per cow per day
[2]Based on output of 2 kg of manure per goat per day
[3]Based on output of 2 kg of manure per sheep per day

(1977) estimated that, for mature beef cattle consuming 70 liters of water per day and 10 to 16 kilograms of feed per day with a digestibility of 45 percent, the amount of manure output ranges from 2 to 20 kilograms. The average output is about 5 kilograms per head per day. Thus, for 9 million head of cattle, the yearly manure output in Tanzania is likely to be about 16 million tons. Since the cattle spend roughly half the time on the range and half the time in the houses, pens or kraals, about half of the dung would be available for agricultural use. This would be about 8 million tons.

Similar assumptions allow for 2 million tons of goat manure, 1.3 million tons of sheep manure, 59,130 tons of pig manure and 401,500 tons of chicken manure per year.

The total manure output from livestock is about 11 million tons per year. Assuming the average N content of the manure is about 0.7 percent (estimated from Table 1), the total N from manure is 77,000 tons. This is more than three times the amount of nitrogenous fertilizer used in Tanzania in 1980, according to estimates by Chowdhury *et al.* (1983).

Type and Quality of Manure

Livestock manure is made up of the undigested portion of the food, bacteria and protozoa from the digestive system, and other minerals and waste products.

Factors influencing the quality of manure include:

Kind of food eaten: Concentrate foods (mixtures of brans from cereals and oil cakes) produce better dung than forages alone.

Kind and age of animal: Dung from different animals varies in nutrient content (Table 3). The age of the animal is also important: Young growing animals produce relatively more manure than mature animals. Animals producing milk yield dung of lower quality, because most of the nutrients have to replace what goes to form the milk.

Age of dung: Fresh manure contains more nutrients than rotted dung, however, fresh manure—especially that of chickens—has high N content, which may be injurious to plants. Fresh manure also is very bulky. Thus, it is advisable to dry the manure for some time before applying it to the field.

Manner of storage: Unless properly stored, nutrient loss from manure can be very great. Manure should be kept under shelter so that it is protected from leaching by rain water. Gaseous losses of N should be minimized by composting.

Table 3: **Percentages of Nitrogen, Phosphate, and Potash in Different Animal Manures**

Kind of Animal	Nitrogen	Phosphate	Potash
Rabbit	2.4	1.4	0.6
Hen	1.1	0.8	0.5
Sheep	0.7	0.3	0.9
Steer	0.7	0.3	0.4
Horse	0.7	0.3	0.6
Duck	0.6	1.4	0.5
Cow	0.6	0.2	0.5
Pig	0.5	0.3	0.5

Source: Minnich and Hunt, 1979

Other Waste Products From Livestock

Other livestock wastes, like hoof, horn and bone meals, are obtained from slaughterhouses, factories and markets. These are sometimes applied directly to the soil as fertilizers. The nutrient contents of manure and bone meal are shown in Table 4.

Use of Farmyard Manure

In areas where a mixture of perennial and annual crops is grown, farmyard manure (FYM) is either collected and applied daily, or heaped in piles and spread when dry.

Even in areas outside the perennial-crop and mixed-farm agricultural systems, such as the Ukara Islands, the value of farmyard manure is well-appreciated. Gunn (1953) reported on the effect of farmyard manure in wheat and tobacco fields in the then Southern Highlands of Tanganyika (now Tanzania) at the rate of 12.5 tons per hectare. Le Mare (1953) reported studies of FYM on maize and groundnuts in the old Groundnut Scheme areas (Kongwa, Nachingwea and Urambo). The rate of application was about 25 tons per hectare. Peat (1953) reported on the effect of FYM on cotton, maize, bulrush millet and groundnut yield in Sukumaland. In some of these studies, a comparison was made between FYM and artificial fertilizers.

The response from artificial fertilizers was higher than or equal to FYM in the year of application. However, the residual effects of FYM were felt up to eight years later in some cases (Peat, 1953). Tidbury (1953) also showed good crop response to FYM from some soils in Zanzibar.

Table 4: **Comparison of the Nutrient Contents of Cattle Manure and Bone Meal**

Chemical	Dried Cattle Manure	Bone Meal
	percentage nutrient content	
N	2	2 to 4.5
P_2O_5	1.5	22 to 28
K_2O	2.2	0.2
Ca	3.3	20 to 25
Mg	0.9	0.4
S	0.4	1
Cl	0.6	0.2
Cu	0.01	-
Mn	0.03	0.02
Zn	0.03	-

Source: Bowman, 1978

How to Improve Quantity and Quality

More manure is recovered from livestock kept under intensive management systems than from those under free or partial range systems. The quantity of compost can be increased if bedding or litter is provided. The loss of nitrogen in urine is also minimized under these conditions, because it is absorbed into the straw. Fresh litter should be added whenever the previous supply looks fouled or dirty. Removal of the mixture of dung and litter should be done three or four times a year. This allows microorganisms to act on the feces, urine and straw to produce a partially decomposed product.

In large dairy cattle and pig units, it is possible to keep the manure in a wet form if water is used to clean the pens. Such slurry is then spread directly onto the fields. But this is an expensive way of handling manure, because there is a high investment for holding tanks and spreading tanks.

Potential of Using More Farmyard Manure in Tanzania

The high cost of artificial fertilizer should be one of the factors which may encourage farmers to use FYM. However, there are some properties of the FYM which tend to discourage its wide use: Bulkiness, smell and difficulties in spreading are just some of these properties.

The use of wheelbarrows, oxcarts and tractor trailers can reduce the transportation difficulties. However, if the manure was dried and spread toward the end of the dry season, just before the commencement of the rains, ease of handling would be increased.

The quantity of FYM being produced in the country could be increased if intensive systems of livestock were adopted. Fielding and Kyomo (1978) have shown that feedlots for fattening beef cattle in Tanzania can be profitable. Readily available livestock feeds would encourage commercial pig and poultry producers to use intensive systems of animal production, which would lead to increased amounts of farmyard manure needed for crop production. It should later be possible to package FYM, especially in dry form, and transport it to nearby areas where it cannot be obtained in sufficient quantities.

Conclusion

Increased crop yields per unit of land can come about if efforts are made to add nutrients to the soil and replace what is taken up by plants. Artificial fertilizers can provide the macro- and micro-elements needed by the plants. It seems the most limiting element is nitrogen.

Livestock in Tanzania produce about 77,000 tons of nitrogen per year, which is more than three times the amount of N our country obtained from inorganic fertilizers in 1980. This means that all the nitrogen produced from artificial fertilizers could be replaced by nitrogen from farmyard manure. Manure also has the advantage of conditioning the soil and improving its water-holding capacity and microbial activities.

However, the availability of manure for extensive usage will depend on the means of transporting it and of spreading it in the field. It is recommended that every effort be made to adopt intensive livestock production methods in order to obtain large quantities of manure. Methods of packaging this product in dry form to improve its handling should also be investigated.

REFERENCES

Bowman, J. C. 1978. Animals for man. Studies in biology #78. Edward Arnold, London. 70 p.

Chowdhury, M. S., B. J. Ndunguru and L. L. Lulandalla. 1983. Contribution of biological nitrogen fixation to the nitrogen supply of soils. Presented at Workshop on Resource-Efficient Farming Methods for Tanzania. Morogoro, Tanzania. May 16–20, 1983.

Fielding, D. and M. L. Kyomo. 1978. Sunflower or cottonseed meal as supplements for steers on molasses/urea-based diets. Trop. Anim. Prod. 4(3):263-267.

Food and Agriculture Organization of the United Nations. 1976. Perspective study of agricultural development in Tanzania. Livestock Production. FAO, Rome. 48 p.

Gunn, J. S. 1953. The responses of wheat, tobacco and pyrethrum to fertilizers in the Southern Highlands of Tanganyika (now Tanzania). E. Afr. Agric. For. J. 19:39–40.

Le Mare, P. H. 1953. Responses to fertilizers in areas of Tanganyika now farmed by the Overseas Food Corporation (1947–52). E. Afr. Agric. For. J. 19:38–39.

Ministry of Agriculture, Tanzania. 1979. The 1978 livestock count in mainland Tanzania and beef demand and supply study. 54 p.

Minnich, J. and M. Hunt (ed.). 1979. The Rodale guide to composting. Rodale Press Inc., Emmaus, Pa. 405 p.

Peat, J. E. 1953. Fertility responses—Ukiriguru. E. Afr. Agric. For. J. 19:37–38.

Taiganides, E. P. 1977. Animal wastes. Applied Sciences Publishers Ltd., London. 429 p.

Tidbury, G. E. 1953. Crop responses to fertilizers and manures in Zanzibar. E. Afr. Agric. For. J. 19:42–43.

DISCUSSION

Role of Livestock in Organic Farming

Q: (Harwood, Rodale Research Center): It appears that the biggest difficulty is to get the cattle dung from the kraal. What is your recommendation?

A: (Kyomo): It is a pertinent question and is of importance if dung has to be used for agriculture. This exercise could be very labor-intensive if the dung has to be collected every day. One method could be to put straw on, and then collect the dung along with the straw. In areas where I come from, we don't leave cattle out in the open.

(Comment by Jana, University of Dar es Salaam): Where manure is left in the open, there should be control of runoff to reduce losses. In other places, farmyard manure is collected in cement pits, thus retaining its nutrients.

(Comment by Kapande, MATI, Ukiriguru): In 1974, I read in the newspaper that small-scale pits could be made with sand, ash and soil. This maintains the nutrient quality of dung.

(Comment by M. Oputu): In Tanzania, the majority of farmers are at subsistence level, and there

is always a transport problem. If we ask a farmer to make pits, he may be reluctant to do it, due to its labor-intensive nature. Therefore, it is necessary to have oxcarts, which cost Tsh. 4,000. But, unfortunately, oxcarts are not easily available.

(Comment by Kasembe, TARO): Point regarding oxcarts is taken. The organizations involved in the manufacture of oxcarts are here and I hope they will take note of the comment.

Q:(Haule): If we are serious about using animal excreta, then why not think about using human excreta? I have heard that this is used in many countries in the Orient.

(Comment by Kasembe): "UTAFITI" has a booklet on this subject. In some areas of Tanzania, such as Ukara, human excreta is used.

A:(Kyomo): Mr. Haule has raised an important question. However, I feel that before we think of using human waste, we must use manure and compost more efficiently, first. Secondly, one has to look at the health hazards due to possible contamination of human waste with disease-causing organisms.

(Comment by Haule): I am a little concerned about some constraints involved in the use of cattle dung. Could the speaker comment on the campaign of "destocking," and simultaneously increasing production of dung?

A:(Kyomo): What we want is fewer animals, but with larger size.

(Comment by Milima). All farmers are not keen on using manures because of their labor-intensive nature. If farmers start collecting manures and applying them, there is very little time left for weeding.

(Comment by Harwood): This question of weeding problems with the use of compost will be dealt with tomorrow.

(Comment by Ngeze, CCM chairman, Kagera): I wish to congratulate Professor Kyomo for his excellent presentation. For the first time, I realize that our country produces approximately 11 million tons of dung. Still, very little is used, especially in my region, Kagera. One could see nutrient-starved cotton fields in Kagera. Here, I have come to learn about the dangers of using human waste. But, in my travels to Hungary, I saw pit latrines, and from there, human waste is used without any problem. Even in Tanzania, we use human excreta in Ukerewe Islands. In Hungary, pit latrines have two doors. People use one door until the pit on that side is used up. Then they close it and start using the other side. Dry, decomposed human waste is available for use on the farm.

(Comment by Kyomo): I thank the previous speaker for his comments. It appears that we are not using human waste here in Tanzania due to lack of awareness. Coming to health hazards involved with using human exreta, medical technology has advanced to a considerable extent, and most of the dangers have been eliminated. The work of Dr. Kiliman shows that use of human excreta in the preparation of compost is safe.

(Comment by Jana): In some countries, like India, human excreta is called "night soil." Once it is decomposed, it is humus. In India, city councils in big cities like Delhi, Calcutta, Bombay and Madras collect and decompose night soil in large pits and sell it for use in small gardens.

BIOLOGICAL ASPECTS OF COMPOSTING

A. M. Borowski and W. C. Liebhardt, Rodale Research Center, Kutztown, Pa. 19530

Composting is a dynamic, biological process whereby a mixed microbial population converts heterogeneous organic matter into a stable, humus-like product useful as a soil conditioner and fertilizer. Being a biological process, the factors and requirements intrinsic to biological activity determine the course of composting. The following discussion describes the microbiological aspects of composting and the environmental factors affecting it. (Golueke, 1972; Gray and Biddlestone, 1971a)

Substrate

The physical and chemical nature of the substrate is a key factor in determining the course and rate of the composting process. Particle size and chemical characteristics of the material are two important substrate properties.

The ideal size of particles would be the minimum size at which no compaction would occur. Compaction impedes the diffusion of oxygen to, and carbon dioxide from, the sites of decomposition. Without adequate oxygen, the process cannot continue.

Shredding or grinding raw materials makes them more susceptible to microbial invasion by exposing a greater surface area to microbes. Furthermore, with the presence of oxygen at the particle surfaces, greater aerobic activity is possible. Shredded refuse heats more uniformly, withstands excess drying at the pile surface, insulates against heat loss and resists moisture penetration from rain better than unshredded materials.

However, shredding of material is not always mandatory: It depends largely upon the nature of the raw material and the use of the finished product. Finished compost used as a potting soil generally needs to be finer in texture than that used for field applications. Shredded material can generally be applied more easily and uniformly to the land. (Golueke, 1972; 1977; Gotaas, 1956; Gray and Biddlestone, 1971a; Regan and Jeris, 1970)

The important chemical characteristics include molecular size and complexity, and elemental makeup of the material. These factors determine how vulnerable the material is to attack by microorganisms.

Plant residues commonly used in preparation of compost, such as straw, corn stalks, plant stubble and leaves, are high in complex carbohydrates, like celluloses, hemicelluloses, and lignin. Hemicelluloses are carbohydrates of about 50 to 150 glucose units; celluloses are larger polymers of about 2,000 to 10,000 glucose units, with as many as 15,000 units, depending on the plant species. Lignin, a very tough, woody, cell wall material, is extremely resistant to enzyme attack and is usually last to degrade during composting. (Golueke, 1977; Gray and Biddlestone, 1976; Waksman, 1936)

Since these carbohydrates are too complex to be directly utilized by the microorganisms, they must first be hydrolyzed by extracellular enzymes to simpler forms. The following reaction illustrates this initial breakdown:

$$\underset{\text{cellulose}}{(C_6H_{10}O_5)_n} + nH_2O \rightarrow \underset{\text{glucose}}{nC_6H_{12}O_6}$$

This first step provides no useful energy to the active microbial species.

Organisms get energy for growth only from reactions occurring within the cell, so it is necessary for the larger compounds to be transformed into simpler molecules that can penetrate the cell surface. Regardless of the structural differences of the starting material, once inside the cell, the carbon in the substrate will ultimately be metabolized through the same steps. That reactions is as follows:

$$C_6H_{12}O_6 + 6O_2 \rightarrow 6CO_2 + 6H_2O + \text{energy (682 kcal)}$$

Oxygen is added to each of the glucose carbons to form CO_2, while some of the electrons and all the hydrogen in the glucose molecule will be lost as H_2O. Energy is also released during this biological oxidation process. Due to the inefficiency of the process, most of the energy liberated is lost as heat. However, a portion of it is trapped by the cell to form ATP (adenosine triphosphate).

ADP (adenosine diphosphate) + inorganic phosphate + energy — ATP.

When there is a demand for energy in cell synthesis, ATP is converted back to ADP with a controlled release of energy.

ATP — ADP + inorganic phosphate + energy

However, these respiration reactions are not accomplished in a single step. The change from substrate to end products involves numerous changes and is accomplished by an elaborate system of enzymes. (Alexander, 1977; Brock and Brock, 1978; Levy *et al.*, 1973; Pelczar and Reid, 1958)

In decomposing celluloses and hemicelluloses, microorganisms bring about the synthesis of microbial cell substance. During composting, the compounds change from complex (cellulose, hemicellulose) to simple (CO_2, H_2O) back to complex (protoplasm).

Microorganisms utilize almost all elements in their metabolism. The elemental makeup of the substrate is significant in determining microbial activity. When all nutritionally significant elements are abundant, a greater population of microbes can be supported and the process will proceed more rapidly and extensively.

The age of the plant also affects the rate of decomposition. Young tissues contain a larger percentage of water-soluble materials like simple sugars and amino acids. As the plant ages, the content of water-soluble substances, proteins, and minerals decreases, and the percentage of cellulose, hemicelluloses and lignin increases. As a result, in tissues in which 20 percent to 30 percent of dry matter is water soluble, decomposition proceeds rapidly.

Celluloses and hemicelluloses are the next compounds to disappear, and lignins, which are highly resistant, are relatively more abundant in residual decaying organic matter. (Alexander, 1977; Golueke, 1977)

The elements designated as macronutrients, because of their abundance in cellular material, are nitrogen, phosphorous and potassium.

Carbon, in an available form, makes up about 50 percent of the cellular mass. As mentioned earlier, carbon is used as an energy source in microbial metabolism.

Nitrogen, however, is probably the most important element in the nutrition of composting microflora, since it is required for the assimilation of the carbon substrate in organic wastes.

Phosphorus is next in importance, while K, Mg, Ca, S, and trace quantities of several other elements have an important role in cell metabolism. These elements are usually present in most wastes in sufficient amounts to permit satisfactory composting without the need of further additions. (Golueke, 1977; Gray and Biddlestone, 1971b; Knuth, 1969)

Not only must these nutritional elements be present in the substrate, but a balance between them must occur. The balance between carbon and nitrogen (more frequently referred to as the C/N ratio) is one of the most important aspects of successful composting. This ratio is used to assess the suitability of a given waste as a substrate. Since carbon serves as a source of energy and as an element in the cell protoplasm, much more carbon than nitrogen is needed. Microorganisms generally utilize 30 parts by weight of carbon for each part of nitrogen. Therefore, a C/N ratio of 30 would seem desirable for efficient composting. Table 1 gives the C/N ratios for some compostable materials.

The suggested optimal C/N ratio is from 25 to 30. Note that this ratio refers to the amount of available carbon to available nitrogen. In materials such as lignins and some forms of cellulose, carbon may be present in a form so resistant to biological attack that its presence is not significant, and the permissible C/N ratio could be higher than 30. Nitrogen in most wastes is readily available, and so the permissible C/N ratio is rarely lowered because of nitrogen being in an unavailable form. (Gotaas, 1956; Poincelot, 1972; Waksman, 1936)

Generally, if carbon is available and a C/N ratio is above 30, the carbon will be in excess and will slow down the composting process considerably. The decomposition decreases once all the nitrogen has been used. Some of the microorganisms have to die before the nitrogen, which had been immobilized in their tissues, is released. The use of this nitrogen by other organisms to form new cell material requires the burning of excess carbon to CO_2. Several life cycles of microorgan-

Table 1: **C/N Ratios of Some Compostable Materials (dry-weight basis).**

Material	C/N Ratio
Urine	0.8
Blood	3
Young grass clippings	12
Vegetable wastes (non-leguminous)	12
Tobacco	13
Farmyard manure (avg.)	14
Onion	15
Lucerne (alfalfa)	16 to 20
Grass clippings (avg. mixed)	19
Seaweed	19
Red clover	27
Oat straw	48
Flax waste	58
Corn stalks	60
Wheat straw	128
Fresh sawdust	511

isms are required to assimilate this excess carbon satisfactorily and to bring the C/N ratio to a more suitable level. (Gotaas, 1956; Shilesky and Maniotis, 1969; Waksman *et al.*, 1929)

If the C/N ratio is below 25, then carbon (energy source) is less than that required for converting available nitrogen into protoplasm. The microbes will make full use of available carbon, and the excess nitrogen will be lost as ammonia. The presence of excess N as NH_4^+ or NH_3 can be traced to microbial metabolism of protein. Proteins are polymers of amino acids, and the amino group ($-NH_2$) is characteristic of amino acids. Microbes utilize enzymes to hydrolyze protein molecules to their constituent amino acids. As with complex carbohydrates, it is necessary for the large protein molecule to be cleaved first to smaller units that can then be assimilated within the cell. These amino acids undergo further biochemical reactions and thereby become part of the microorganisms' protoplasm. But when carbonaceous compounds are insufficient to accommodate the amino acids in the synthesis of new protoplasm, the excess amino acids will be deaminated. How the amino group is removed and becomes ammonia is as follows:

$$CH_3CHNH_2COOH + 1/2\,O_2 \xrightarrow[\text{alanine deaminase}]{\text{enzyme}} CH_3COCOOH + NH_3$$

alanine → pyruvic acid

This is an oversimplication of the reaction, but it demonstrates how the nitrogen can be lost as ammonia through volatilization. High temperatures and alkalinity (pH above 7.0), both common during the composting process, increase the volatilization of excess nitrogen even more. This nitrogen loss should be minimized if the finished compost is to have some fertilizer value. In addition, if the amount of excess N becomes too great, ammonia concentrations could reach levels that are toxic to microbial populations. (Alexander, 1977; Golueke, 1977; Poincelot, 1972)

Microorganisms

Bacteria, actinomycetes and fungi are the organisms chiefly responsible for the decomposition of plant and animal remains. The microflora population is continually changing during the process, reflecting the diversity of environments occurring because temperatures and substrate are in a state of flux. (Shilesky and Maniotis, 1969) See Table 2.

Bacteria

Bacteria are present in all parts of the pile in vast numbers, but because of their small size, they represent less than half of the total microbial population.

Immediately after the material is stacked in the pile, bacterial activity begins. Mesophilic, acid-producing bacteria are the first to appear and are responsible for the initial breakdown of organic material and for a large part of the heat energy released into the composting mass. This mesophilic stage is short, and some feel the primary role of these organisms is to raise the environmental temperature for the thermophilic organisms that follow. During the limited time that they do flourish, they utilize the most readily accessible carbohydrates and decomposable proteins.

As the temperature of the compost pile begins to rise above 40 C, the mesophilic bacteria are replaced by the thermophilic ones. These thermophilic bacteria initially decompose protein and non-cellulose carbohydrate components. They will also attack the lipid and hemicellulose fractions, but not cellulose and lignin.

As the temperature rises further, the species diversity begins to narrow. At temperatures greater than 70 C, most organisms become inactive, and

Table 2. **Microfloral Population During Aerobic Composting.**

	Mesophilic (M) Ambient to 40° C	Thermophilic (T) 40° C to 70° C	Cooling
	numbers per gram of wet compost at each temperature phase		
Bacteria			
(M)	10^8	10^6	10^{11}
(T)	10^4	10^9	10^7
Actinomycetes			
(T)	10^4	10^8	10^5
Fungi			
(M)	10^6	0	10^5
(T)	10^3	10^7	10^6

only the spore-forming bacteria can develop. These bacteria are chiefly responsible for the reduction of hemicelluloses.

In the final stages, as temperatures begin to decline, thermophilic bacteria disappear and mesophilic bacteria reappear at temperatures below 40 C. The mesophilic bacteria are not as predominant during this time as they were initially. (Finstein and Morris, 1975; Gray and Biddlestone, 1971a; Poincelot, 1972; Waksman *et al.*, 1939)

Actinomycetes

Actinomycetes are classified as bacteria in the strict sense, but do possess characteristics of fungi, and so are in a transitional group between simple bacteria and fungi.

Actinomycetes are almost completely absent at the beginning stages of composting. As temperatures approach 50 C, thermophilic actinomycetes become established and are capable of continued growth at temperatures up to 70 C. These organisms are capable of using a wide array of compounds, but mostly break down cellulose, lignins, and other, more resistant compounds.

Actinomycetes are the dominant group during the final temperature drop. They are considered ineffective competitors in the initial stages of decomposition, when nutrient level is high and competition is great. But when nutrients and competition diminish, and when only resistant compounds remain, as in the final stages, the actinomycetes flourish.

Their presence can be detected both by smell and sight at this time. The faint, earthy odor of the compost pile is the result of actinomycetes activity, and becomes more pronounced as time progresses.

The grayish-white, filamentous or powdery layer that forms in the outer four to six inches of the pile is the mycelium of the actinomycetes, possibly mixed with some fungal mycelium. The absence of this layer does not mean actinomycetes are absent or in low numbers, but rather that they are dispersed throughout the composting mass. Frequent turning of the pile will disturb this characteristic layer, because of the lack of time and conditions necessary for growth of the organisms. (Alexander, 1977; Golueke, 1977; Gotaas, 1956; Waksman *et al.*, 1939)

Fungi

More types of fungi have been identified in the composting process than bacteria or actinomycetes, because of the relative ease in identifying them.

Fungi can be grouped according to sequence of occurrence. These groups are arbitrary, since there is a good deal of overlap and some occur in more than one group.

Mesophilic fungi compete only for a short time before the temperature rises. They exhaust the simple carbon substrate and then are quickly replaced by the thermophilic fungi. Most do not reappear in the later stages to any degree, because of the lack of easily available carbon.

Thermophilic fungi are capable of growth in the 40 C to 60 C range, but die when the temperature exceeds 60 C. They decompose hemicelluloses and cellulose.

This thermophilic stage occurs when most of the decomposition is taking place, although it has not been determined which group of organisms is largely responsible. Studies show that no single organism, no matter how active, can compare with a mixed population in producing rapid and satisfactory decomposition.

Mesophiles reappear in large numbers during the cool-down phase. Evidently, while temperatures are in the thermophilic range in the pile's center, these fungi survive in the outer layers until

the temperature drops sufficiently for them to redistribute themselves. Despite being confined to this area and only becoming active in the latter part of composting, these fungi break down a considerable amount of cellulose, lignins, and resistant materials, which remain after the more readily decomposable materials have been utilized. (Chang and Hudson, 1967; Gotaas, 1956; McCalla, 1960; Poincelot, 1972)

Inocula

The question of whether to add additional microorganisms to the pile to facilitate decomposition is raised frequently. There is significant evidence to show that adding microbes alone produces no beneficial results. The indigenous microbial populations are present in abundance on organic materials, and given the appropriate environment, they multiply rapidly and promote composting without delay.

A study of the effects of various inocula on the composting of garbage and mixed municipal refuse found that, even though the inocula were rich in bacteria, none accelerated the process or improved the final product. Garden soil, horse manure, compost, and a special bacterial culture were tested. There was no significant difference in the temperature curves, or in the chemical analyses of the materials, at different intervals in the composting period. (Golueke *et al.*, 1954)

The types of inocula or "activators" that may prove beneficial usually contain materials that are otherwise lacking in the compost. Activators supplying nitrogen or phosphorus, or materials that change the pH level, are likely to affect the process.

Therefore, when assessing an inoculum, care should be taken to provide a control pile receiving exactly the same treatment as the inoculated pile. If the inoculum changes the pH or nutrient levels, then the control pile must have the same adjustments made. The sole difference between the two piles should be that one is inoculated with a microorganism population, and the other is not.

In the unlikely event that an inoculum is required, a shovel or two of rich garden loam, partially decomposed horse manure or composted material will contain all the microorganisms needed to decompose any substrate. (Golueke *et al.*, 1954; Golueke, 1977; Van Vuren, no date)

Rate-Controlling Factors

Since composting is a biological process, the factors controlling it are those that influence all biological activity. The principal environmental factors that will be discussed are moisture, oxygen availability or aeration, temperature and pH level.

Moisture

Moisture governs microbial activity in two ways: 1) Enough moisture needs to be present to supply the physiological needs of the organisms. Biological activity is greatly reduced at substrate moisture levels below 30 percent and ceases at about 12 percent to 15 percent; and 2) Where moisture is excessive, microbial activities are reduced not as a result of the water itself, but because the water indirectly hinders air movement and reduces the oxygen supply.

The optimal moisture content (wet weight) should be between 50 percent and 60 percent. This varies because the quantity of water required changes according to the materials used. Straw and strong fibrous materials, which are naturally dry, can hold up to 80 percent moisture and require large amounts of water initially. Vegetable trimmings and green, succulent materials can hold 50 percent to 70 percent moisture, but care must be taken to avoid compaction when stacking these materials.

A crude indicator of adequate moisture is the glistening appearance of the material. Also, when compressed by hand, the material should form a ball which will slowly expand like a sponge when pressure is released. If there is too little moisture, decomposition will not occur.

Excess moisture causes drainage, which can leach out soluble nutrients from the pile. This drainage may occur before the foul odors caused by anaerobic conditions become noticeable.

Figure 1: **Temperature Variation With Time Indicating the Phases of Microbial Activity.**

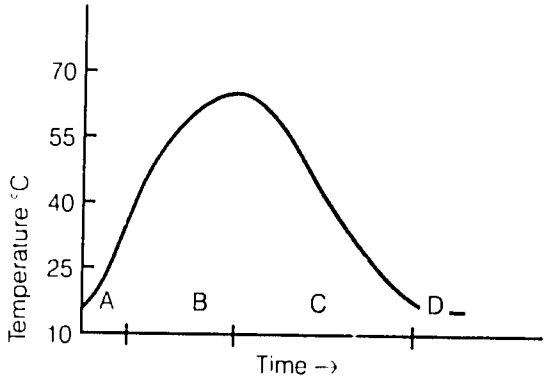

A—mesophilic B—thermophilic C—cooling D—maturing

If anaerobic conditions do occur, nitrogen loss can result through denitrification. Denitrification results from the exclusion of oxygen, rather than from the presence of water, itself. The denitrifying bacteria are aerobic, but in the absence of oxygen, the nitrate replaces the oxygen—not as a source of O_2, but as an electron or hydrogen acceptor during respiration. In the denitrification sequence, nitrate is first reduced to nitrite, which is then transformed to NO. The NO, with N_2O as the intermediate, is converted to N_2, which is lost to the atmosphere. The biochemical pathway of denitrification proceeds as follows:

$$2\,HNO_3 \xrightarrow[-2H_2O]{+4H} 2\,NHO_2 \xrightarrow[-2H_2O]{+2H} 2\,NO \xrightarrow[-H_2O]{+2H} 2\,N_2O \xrightarrow[-H_2]{+2H} N_2$$

Oxygen will inhibit denitrification, so it is important to maintain the optimal moisture content and adequately aerate the composting mass.

Anaerobic conditions may also result from the increase in moisture that occurs as decomposition progresses. If aeration is poor from the beginning, the water, an end product of microbial metabolism, will accumulate and impede the process. (Alexander, 1977; Golueke, 1977; Gray and Biddlestone, 1971a; Poincelot, 1972; Smith and Thornton, 1945; Tisdale and Nelson, 1975; Van Vuren, 1950)

Aeration

Oxygen is required by aerobic microorganisms for the decomposition of compost. In order to supply oxygen to the microbes and to rid the pile of major waste products (CO_2 and water), adequate aeration is vital.

To ensure good aeration, the material should be packed loosely and lightly when constructing the pile. Here we see how aeration and moisture are interdependent, as the material to be composted affects the amount of air in the pile. Green material, when freshly stacked, tends to compact too firmly. Fibrous materials will usually make the pile loose and too well aerated, and must be thoroughly wetted to reduce the structural strength of the material so decomposition may take place.

Pile construction affects aeration in another way: The higher the heap, the poorer the air supply, particularly in the lowest layers where pressure is greatest. In pit composting, care must be taken to keep the bottom from becoming waterlogged.

A simple, effective means of monitoring oxygen supply is by odor. Foul odors signal anaerobic conditions in the pile; the intensity of odors is an indication of the extent of anaerobiosis. When this happens, the pile should be turned daily until odors disappear and the pile returns to an aerobic state. (Golueke, 1977; Gotaas, 1956; Gray and Biddlestone, 1971a; Smith and Thornton, 1945; Van Vuren, 1950)

Temperature

At the start of the process, the composting mass is at ambient temperature. But in two or three days, the decomposing activities of the mesophilic organisms rapidly heat up the pile to temperatures above 40 C, and thermophiles replace the mesophiles. The temperature rises rapidly to about 55 C, then begins to taper off at between 60 C and 65 C, occasionally peaking at 70 C, but rarely higher. These high temperatures are essential for the destruction of pathogenic organisms and weed seeds.

This stage is followed by a gradual cooling to ambient temperatures. See Figure 1.

As microbial activity subsides, the subsequent reduction in heat energy being generated causes the leveling in temperature. This slowdown occurs because the readily broken down substances have been consumed, and only the more resistant ones remain. At this point, the temperature begins its final drop. The resistant compounds can now be attacked by fungi and actinomycetes that once inhabited the outer edges of the pile. The fact that these organisms are restricted to the outer layers shows that the temperature is not at a uniform level throughout the pile. It is highest in the center and decreases toward the exposed surface.

The ambient air temperature may have some influence on the pile temperature. If materials in outer layers are porous, the temperature can be affected by penetration from the outside air. Generally, organic matter will act as an insulator and conserve the heat within the pile. Better temperature distribution and less heat loss occur in materials that have been shredded and are in a more homogeneous state. Moisture also decreases the amount of ambient air penetrating the pile as it fills interstices between particles, causing an increase in convection of heat from the high temperature zone in the pile's center.

Temperature is an excellent index of the course of the process. If the temperature does not rise,

one or more factors is absent or unfavorable. It should be noted here that during turning of the pile, the temperature may drop 5 to 10 degrees C, but will return to its high level in a few hours.

Temperature of the compost can be checked by: 1) digging into the stack and feeling the temperature of the material, although it may be too hot to hold the hand in the pile for very long; 2) inserting a metal or wooden rod two feet (0.5m) into the pile for 10 to 15 minutes. The rod should be too hot to hold when removed; and 3) using long-stemmed thermometers, popular among operators of larger composting operations. (Golueke, 1977; Gotaas, 1956; Gray and Biddlestone, 1971a; 1971b; Poincelot, 1972; Van Vuren, 1950)

pH Level

During the decomposition process, pH changes occur. The initial pH is usually slightly acidic (pH 6), but organic acids, which result from the decomposing activity of mesophilic bacteria, cause a reduction in pH to between 4.5 and 5. As the temperature rises above 40 C and these acid-forming bacteria are replaced by thermophilic organisms, the pH will rise and become slightly alkaline (pH 7.5 to 8.5). Finally, when temperatures begin to drop and mesophiles re-invade the pile, the pH drops by a small amount, and usually remains slightly alkaline.

The control of pH in composting is seldom a problem if the material is kept aerobic. Addition of an alkaline material is rarely necessary and may do more harm than good. Alkaline conditions promote nitrogen loss as ammonia, if the nitrogen is present in excess. (Gotaas, 1956; Gray and Biddlestone, 1971a; Poincelot, 1972)

Finished Compost

The final drop in temperature indicates compost is stabilizing and nearly finished. At this point, some slow ripening and cellulose breakdown will continue; the ripening time will vary considerably, because it is a function of many variables, such as the starting C/N ratio, availability of carbon, aeration, etc.

"Ultimate" stability is not desirable, because that would be the oxidation of organic matter to CO_2 and H_2O, and inorganic ash (chemical elements making up the original material). Instead, the desired stability is one in which the readily

Table 3: **Composition of Fresh Manure Produced by Animals Provided With Ample Bedding (on a wet-weight basis).**

Components of manure	Proportions of components		Nutrient content: Nitrogen (as N)		Phosphorus (as P_2O_5)		Potassium (as K_2O)	
	%	*kg/t*	%	*kg/t*	%	*kg/t*	%	*kg/t*
Horse								
Feces	60	600	0.55	3.3	0.30	1.8	0.40	2.4
Urine	15	150	1.35	2.0	trace		1.25	1.9
Bedding (straw)	25	250	0.50	1.3	0.20	0.5	1.00	2.5
Total mixture	100	1,000	0.66	6.6	0.23	2.3	0.68	6.8
Cow								
Feces	63	630	0.40	2.5	0.20	1.3	0.10	0.6
Urine	27	270	1.00	2.7	trace		1.35	3.7
Bedding (straw)	10	100	0.50	0.5	0.20	0.2	1.00	1.0
Total mixture	100	1,000	0.57	5.7	0.15	1.5	0.53	5.3
Pig								
Feces	49	490	0.55	2.7	0.50	2.5	0.40	1.9
Urine	33	330	0.60	2.0	0.10	0.3	0.45	1.5
Bedding (straw)	18	180	0.50	0.9	0.20	0.4	1.00	1.8
Total mixture	100	1,000	0.56	5.6	0.32	3.2	0.52	5.2
Sheep								
Feces	60	600	0.75	4.5	0.50	3.0	0.45	2.7
Urine	30	300	1.35	4.0	0.05	0.2	2.10	6.2
Bedding (straw)	10	100	0.50	0.5	0.20	0.2	1.00	1.0
Total mixture	100	1,000	0.90	9.0	0.34	3.4	1.00	10.0

Table 4: **Nutrient Losses in Rotted Manure, Determined After 3 and 12 Months, With and Without Protection.**

Nutrient	Nutrient loss after 3 months		Nutrient loss after 12 months	
	Protected	Exposed	Protected	Exposed
	kilograms		*kilograms*	
Organic matter	480	520	531	605
Nitrogen (as N)	3.6	6.4	5.0	8.6
Phosphorus (as P_2O_5)	no loss	0.9	0.5	1.8
Potassium (as K_2O)	no loss	6.4	0.9	10
	percentage		*percentage*	
Organic matter	55	59	60	69
Nitrogen (as N)	17	29	23	40
Phosphorus (as P_2O_5)	no loss	8	4	16
Potassium (as K_2O)	no loss	22	3	36

Note: Amount of manure used in the study was 3,630 kg, containing 879 kg organic material, 21.8 kg nitrogen (as N), 11.3 kg phosphorus (as P_2O_5), and 28.1 kg potassium (as K_2O).

decomposed compounds are broken down, but the decomposition of the more resistant compounds is yet to be accomplished. The effectiveness of compost in the soil depends upon the final decomposition of these compounds.

Physical factors, other than the temperature drop, that indicate when compost is finished include earthy odor; dark greyish-black or brownish black color; and fluffy, crumbly structure. However, color alone is not a good indicator of finished compost, because the appearance of rich humus develops in good compost long before declining temperatures signal the decrease in microbial activity.

Chemical and biological tests used by larger operations can give a more obvious indication of when compost is finished. Testing the C/N ratio, starch determination, oxygen consumption and CO_2 evolution, microorganism counts and plant growth are a few such indicators.

The final compost is much lower in moisture and bulk than the original pile. This reduction results from the conversion of some of the substrate carbon to CO_2 and H_2O, which are lost to the atmosphere.

The C/N ratio is lowered gradually throughout the composting process as CO_2 is lost. A final C/N ratio of between 10 and 12 is the acceptable range for agricultural purposes. If it is any higher, the compost will continue to decompose after being applied to the soil, at the expense of soil nitrogen. (Golueke, 1977; Gotaas, 1956; Poincelot, 1972)

The controlled decomposition of the pile permits more organic matter to be conserved and form stable humus than would happen if the material were applied directly to the soil. In conventional manure handling, manure is often applied to the soil and not immediately incorporated. The nutrients, particularly nitrogen, are then lost through leaching or volatilization. From 50 percent to 75 percent of the nitrogen can be lost during conventional manure handling, with 25 percent being lost within four days of field application.

When collecting and storing manure, care should be taken to prevent the leaching of urine. Because they are in solution, the nutrients in urine are more readily available for plant use than those in the feces. Slightly more than one-half of the nitrogen, and much more than three-fourths of the potassium excreted by the cow are in the urine. Most of the phosphorus is in the feces. (MacLean and Hore, 1979) See Table 3.

A study was conducted where approximately 3.6 tons of a mixture of equal parts of horse and cow manure was placed in a weather-tight shed. An equal amount was exposed to the weather in an open box with wooden sides and a wooden floor. Table 4 shows the amounts of fertilizing elements that were lost in each case. The chief losses occurred during the first three months of storage. After 12 months, about 10 percent more organic matter was destroyed in the exposed manure than in the protected sample, and nearly twice as much nitrogen was lost. The losses of phosphorus and potassium from the exposed manure were large. (MacLean and Hore, 1979)

In addition to conserving nutrients, composting manure has several other advantages over conventional manure handling. The decomposing processes, by releasing CO_2 and H_2O, can reduce the volume by 25 percent. Also, the compost becomes less dense during the process. One study

Table 5: **Composition Range of Beef Cattle Feedlot Manure and Composted Feedlot Manure.**

	Feedlot Manure	Composted Feedlot Manure
Moisture %	50 to 88	19 to 25
Nitrogen %	0.9 to 1.5	2.0 to 3.0
Phosphorus %	0.3 to 0.5	0.9 to 1.2
Potassium %	0.6 to 1.8	2.8 to 3.5

shows that by combining the reductions in volume and density, composting reduces the entire mass to three-eighths of its original size. By composting, the cost of hauling manure to the fields is lowered, because with a reduced volume of material, less trips to the field must be made. (Sahs, 1979; Small Farm Energy Project, 1980) See Table 5.

The most significant contribution of compost is its long-term effect on permanent soil fertility, structure, tilth, and permeability. In its role as humus, compost has many characteristics which exert a beneficial influence on the soil itself and on growing vegetation. In the soil, it cannot be degraded by microbial activity to CO_2, H_2O and inorganic salts. It has a high capacity for base exchange, for combining with inorganic soil constituents and for water absorption.

Organic acids resulting from the metabolism of organic matter are capable of decomposing certain soil minerals. Specifically, this organic acid production plays an important role in increasing phosphate availability. Phosphorus in this combined form is more easily assimilated by plants.

Nitrogen is stored in microbial protoplasm and becomes available when bacteria die and decompose. This gradual decomposition of insoluble organic matter results in a continuous supply of ammonia, which can then be oxidized to nitrites and nitrates.

Due to its cationic nature, ammonium is absorbed by the soil colloids, and may be retained in the soil for long periods of time if conditions for nitrification are unfavorable. The binding of N in protoplasm inhibits nitrification in a two-step process, in which ammonia is first converted to nitrite (NO_2^-), and then to nitrate (NO_3^-).

$$2\,NH_4^- + 3\,O_2 \rightarrow 2\,NO_2^- + 2\,H_2O + 4\,H^+$$

$$2\,NO_2^- + O_2 \rightarrow 2\,NO_3^-$$

Table 6: **Evolution of the Main Nutrients (N,P,K) of Farmyard Manure During Composting.**

Calculation basis	Nutrients	Length of composting period (months) 0	2	4	12
% dry matter basis	N	2.1	2.9	3.0	2.6
	P_2O_5	1.1	2.0	2.1	2.3
	K_2O	1.6	1.6	2.4	2.5
% of initial dry matter	N	2.1	2.0	1.6	1.6
	P_2O_5	1.1	1.2	1.1	1.1
	K_2O	1.6	1.9	1.9	1.5
Amount as % of initial amounts	N	100	95	86	76
	P_2O_5	100	109	100	100
	K_2O	100	90	90	72
Organic matter present as % of initial organic matter		100	68	46	38

Excess nitrification is undesirable, because nitrate nitrogen is completely mobile in soils and moves with the soil water. When bound in microbial tissue, the nitrogen can be available at a rate which can be used by plants, and losses through leaching are minimized. (Golueke, 1977; Tisdale and Nelson, 1975)

Table 6 illustrates the changes in organic matter and nutrient content occurring during a 12-month composting period.

Soil structure is greatly improved by compost applications. Compost promotes a crumbly structure, which increases the available oxygen and the water-holding capacity of the soil. This increased pore volume allows root systems to develop more extensively. (Golueke, 1977; Ott *et al.*, 1982)

It is difficult to assess each factor in the composting process separately, when each depends on all the others to some extent. The optimum levels for the process have been outlined and should be adhered to as closely as possible to produce a finished product that is an effective soil conditioner and fertilizer.

REFERENCES

Alexander, M. 1977. Introduction to soil microbiology. John Wiley & Sons Inc., N.Y. 472 p.

Brock, T. D. and K. M. Brock. 1978. Basic microbiology with applications. Prentice-Hall Inc., Englewood Cliffs, N.J. 608 p.

Chang, Y. and H. J. Hudson. 1967. The fungi of wheat straw compost. I. Ecological studies. Trans. Br. Mycol. Soc. 50:649-666.

Finstein, M. S. and M. L. Morris. 1975. Microbiology of municipal solid waste composting. Adv. in Appl. Microbiol. 19:113-151.

Golueke, C. G., B. J. Card and P. H. McGauhey. 1954. A critical evaluation of inoculums in composting. Appl. Microbiol. 2:45-53.

Golueke, C. G., 1972. Composting: a study of the process and its principles. Rodale Press Inc., Emmaus, Pa. 110 p.

———. 1977. Biological reclamation of solid wastes. Rodale Press Inc., Emmaus, Pa. 249 p.

Gotaas, H. B. 1956. Composting: a sanitary disposal and reclamation of organic wastes. World Health Organization, Monograph Series #31, Geneva, Switzerland. 205 p.

Gray, K. and A. Biddlestone. 1971a. A review of composting. Part 1. Process Biochem. 6(6):32-36.

———. 1971b. A review of composting. Part 2. Process Biochem. 6(6):22-28.

———. 1976. The garden compost heap. J. Royal Hort. Soc. 101(11):540-544, 594-598.

Knuth, D. T. 1969. Nitrogen cycle ecology of solid waste composting. Develop. Ind. Microbiol. 11:387-395.

Levy, J., J. Campbell and T. Blackburn. 1973. Introductory microbiology. John Wiley & Sons Inc., N.Y. 684 p.

MacLean, A. J. and F. R. Hore. 1979. Manures and compost. Agriculture Canada Public. #868, Ottawa, Canada. 17 p.

McCalla, T. M. 1960. Microorganisms and the breakdown of organic materials. Compost Sci. 1(2):12-18.

Ott, P., S. Hansen and H. Vogtmann. 1982. Nitrates in relation to composting and use of farmyard manures. *In* Lockeretz, W. (ed.). Proc. of 4th International Federation of Organic Agriculture Movements (IFOAM) Conference. Cambridge, Mass. August 18–20, 1982. (in press).

Pelczar, M. Jr. and R. Reid. 1958. Microbiology. McGraw-Hill Book Co. Inc., N.Y. 564 p.

Poincelot, R. F. 1972. The biochemistry and methodology of composting. Conn. Agric. Res. Stn. Bull. #727. 38 p.

Regan, R. W. and J. S. Jeris. 1970. A review of the decomposition of cellulose and refuse. Compost Sci. 11(1):17-20.

Sahs, W. 1979. Compost activities in Nebraska. p. 76-81. *In* Harris, L.E. (ed.). Fertile soil without chemicals. Univ. of Regina Extn., Regina, Saskatchewan, Canada.

Shilesky, D. M. and J. Manious. 1969. Mycology of composting. Compost Sci. 9(4):20-23.

Small Farm Energy Project. 1980. Composting of farm manure. Small farm energy primer project focus #8:35-40. Hartington, Neb.

Smith, F. B. and G. D. Thornton. 1945. Production of artificial manure. Univ. of Fla. Ag. Expt. Stn. Bull. #415. 20 p.

Tisdale, S. and W. Nelson. 1975. Soil fertility and fertilizers. Macmillan Publishing Co., N.Y. 694 p.

Van Vuren, J. (no date). Soil fertility and sewage. Dover Publications Inc., N.Y. 236 p.

———. 1950. Compost. Union of S. Africa Dept. of Agric. Bull. #310. 39 p.

Waksman, S. A., G. Tenney and R. A. Diehm. 1929. Chemical and microbiological principles underlying the transformation of organic matter in preparation of artificial manures. J. Am. Soc. Agron. 21(8):533-546.

Waksman, S. 1936. Humus: origin, chemical composition and importance in nature. Williams and Wilkins Co., Baltimore, Md. 526 p.

Waksman, S., T. Gordon and N. Hulpoi. 1939. Influence of temperature upon microbiological populations and decomposition processes in composts of stable manures. Soil Sci. 47:83-113.

DISCUSSION

Biological Aspects of Composting

Q: (Kasembe, TARO): To what extent have "biovegetals" been used in composting?

A: (Liebhardt, Rodale Research Center): Biovegetals, or inocula, in rapid composting, is a new concept which has been practiced in the U.S.A. It has a bright future in the use of organic fertilizers in problem areas, as they facilitate decomposition.

Q: (Keswani, University of Dar es Salaam): What is the final status of microbes when compost attains temperatures of 60 C to 70 C—especially plant pathogens?

A: (Liebhardt): Some are destroyed. Plant pathogens are usually not thermophiles and cannot withstand high temperatures.

Q: (Johnson): Is it possible to mix sawdust with chemical fertilizers in order to make compost? Could urine serve as a nitrogen source in the process? How long should sawdust be precomposted in making compost? Sawdust is an abundant by-product of sawmills, and its disposal poses a problem.

A: (Liebhardt): Sawdust is a poor material for composting. Bacteria will be confronted with a highly carbonaceous material. They will take nitrogen and cause nitrogen deficiency before they can decompose sawdust. Also, if sawdust is very fine, adequate moisture will be a problem. Sawdust can be used as a mulch, and it will decompose slowly. The use of urine may not be practical, and neither is the use of nitrogenous fertilizers in sawdust composting.

Q: (Semoka, University of Dar es Salaam): Manures can be applied fresh. What are some of the problems of this practice?

A: (Liebhardt): Fresh manures are decomposed rapidly. This facilitates least loss of nitrogen. It should be incorporated, especially at the onset of the rainy season, and covered by soil. Farmers can combine the use of fresh manures and compost.

Q: (Mwijage): How do we ensure that the compost pit is kept optimal? How do we ensure that moisture is kept at 50 percent to 60 percent?

A: (Liebhardt): The pH could be adjusted by adding lime, and a proper carbon-to-nitrogen ratio is important in composting. The paper on methods of compost preparation elaborates on these aspects. The proper choice of ingredients is important. Adequate moisture is ensured by repeated watering during layering of compost ingredients.

METHODS OF COMPOST PREPARATION

P. B. Ngeze, P.O. Box 274, Bukoba, Tanzania
N. A. Mnzava, Dept. of Crop Science, University of Dar es Salaam
J. Ruttle, Rodale Press Inc., Emmaus, Pa. 18049

Self-reliance is one of the goals of Tanzania's agriculture. Nutrient self-sufficiency is part of that effort, and composting of plant and animal residues will help to close up nutrient cycles which now result in the loss of valuable resources. Composting should also help preserve nutrients, restore soil fertility and increase crop production.

Compost making can be labor-intensive; therefore, fresh manure can be incorporated into the soil just prior to planting. This conserves both labor and nutrient resources.

In Tanzania, the use of decomposed organic materials has long been practiced in school and home gardens, and in banana- and coffee-growing areas. Although compost making is not new to most farmers, the science behind it is perhaps not properly understood.

This paper describes fundamental principles and various methods of compost preparation appropriate for Tanzanian farmers. Modified approaches to composting as dictated by prevailing conditions in Tanzania are also described. Further information on compost preparation is found in more comprehensive books (Anonymous, 1978; Golueke, 1973; Howard, 1945; Howard and Wad, 1931; Minnich and Hunt, 1979) and monographs (Dalzell *et al.*, 1979; Gotaas, 1956; Ngeze, 1976). For East Africa, Wilson (1948; 1957) has described a compost preparation method based on Howard's Indore method (Minnich and Hunt, 1979).

The methods presented should be viewed more as guides than absolute recipes, because compost can be made from many materials or mixtures. It is impossible to cover every conceivable situation. Therefore, outreach programs need to understand the basics of composting and modify the composting operation to meet existing circumstances. What is important is that composting be used wherever possible.

Compost is the result of the breakdown of organic wastes by enormous numbers of microorganisms and soil fauna in a moist, warm, aerated environment to give a stable, humus-like end product (Dalzell *et al.*, 1979). For satisfactory results, the organisms must have sufficient food, air, moisture and warmth. All wastes in the compost heap must be decomposable; a general rule is that anything that once lived will decompose.

Preparation Methods

Factors to be considered in selecting a composting area include proximity to animal houses and water, transport of raw materials and finished compost, and volume and season of production.

Equipment Required

Compost heap preparation can be done satisfactorily by using rudimentary equipment which most farmers have or can make easily. Equipment for collecting and transporting organic wastes, such as stretchers and bullock carts, can be made from light poles to increase carrying capacity. Heaps can be constructed and turned with forked spades and hoes.

Though optional, air vents can be provided using poles 6 to 8 feet long (2 to 2.5 meters) and up to 2 inches (5 centimeters) in diameter. Watering can be done with locally-available tins, clay pots, cans or gourds. Such vessels should be finely perforated to ensure even water distribution.

Preparation of Materials

Fresh green materials, like weeds and vegetable or fruit trimmings, can be used without pretreatment. However, bulky items, such as banana pseudostems and other herbaceous materials, should be chopped into small pieces.

Coarse materials like maize stalks must be cut into pieces no larger than 2 inches (5 centimeters) using "pangas." Rice bran, dry tree leaves or straw can be used without pre-treatment, but woody materials, like sugarcane trash, tree bark and sawdust, can be pre-composted in moist earthen pits and added to the compost heap when damp. They can also be used directly.

Where possible, materials for composting should pass through animal sheds as bedding in order to soak in urine, which is rich in potassium and nitrogen. Cow dung and poultry and pig feces can be used directly.

Making the Compost

There are two methods (Univ. of Calif. at Berkeley, 1953) employed in compost preparation, and the choice of which to adopt depends on several factors: climate, technical ability of the farmer, equipment available, amount and type of wastes available, and the quantity of compost required.

The Stack Method: This technique involves the preparation of compost above the ground. It is perhaps easiest and most suitable during the rainy season; and saves labor during the building, turning and handling of compost. However, it is inconvenient when making small quantities of compost, since decomposition may be poor. Where there is no inner cover, hygienic conditions become a problem; during dry weather, a large quantity of water may be required to replace what is lost by evaporation from the stack.

Figure 1: ***Structure of a Compost Pit (Cross Section).***

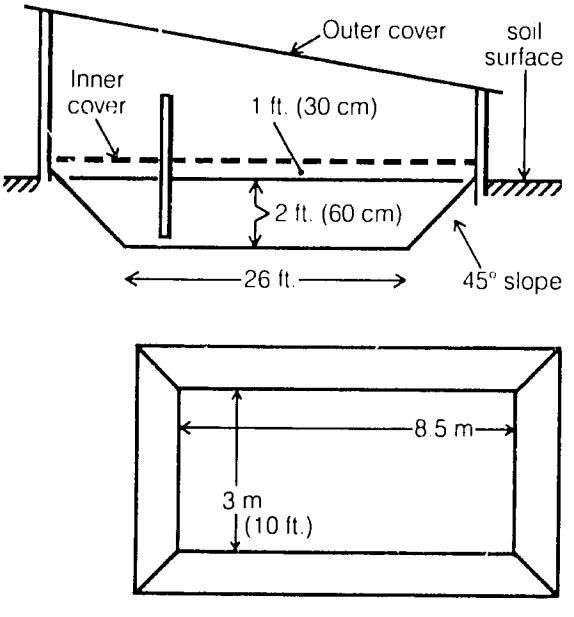

The Pit Method: This technique is most appropriate in the dry season or when water is a problem. Its advantages are that it does not permit excessive moisture loss, and, where organic matter is of kitchen origin or animal waste, it is a more hygienic method, as these wastes are buried so that they do not become a breeding ground for houseflies (Gotaas, 1956; Rodale, 1967; Wilson, 1957). This facilitates an *in situ* build-up of bacterial and fungal inocula for eventual decomposition of new organic matter that is added. However, labor costs in digging the pit and handling and turning the mature compost are rather high. Dangers of poor decomposition from waterlogging also exist.

A pit of dimensions shown in Figure 1 is dug into the soil. Areas with a high water table should be avoided, and pit depth should not exceed 2 feet (0.6 meters) or aeration will be adversely affected. For ease of compost handling, the pit should have slanted edges. Usually, three pits are dug adjacent to each other so that transferring compost during the turning operation is easy. Air vents are constructed with poles, as shown in Figure 1.

The time to maturity will depend on the nature of the ingredients, moisture regime, the extent of aeration, and ambient conditions. In a tropical environment, decomposition is fast under optimum conditions and reaction is complete in three months.

Turning the compost permits rapid decomposition at high temperatures. This increase in temperature is due to an increase in microbial activity. A temperature of 55 C to 60 C (128 F to 140 F) for one day is essential to kill most weed seeds and pathogens. The heaps should be no more than 8 feet (2.5 meters) wide and 5 feet (1.5 meters) high, to encourage aeration and prevent overheating in the center.

Changes in pH during composting are shown in Figure 2. The organic materials become acidic

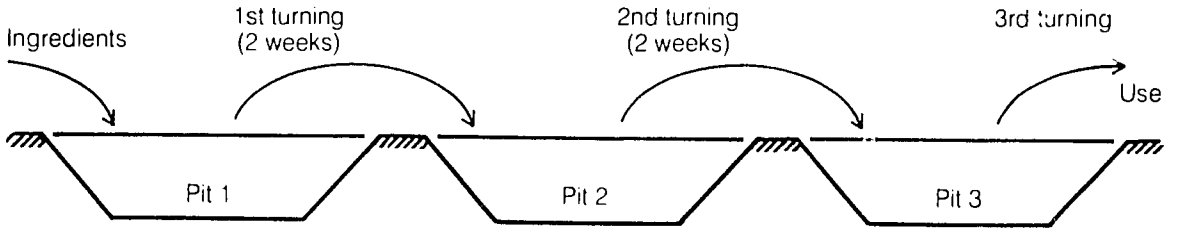

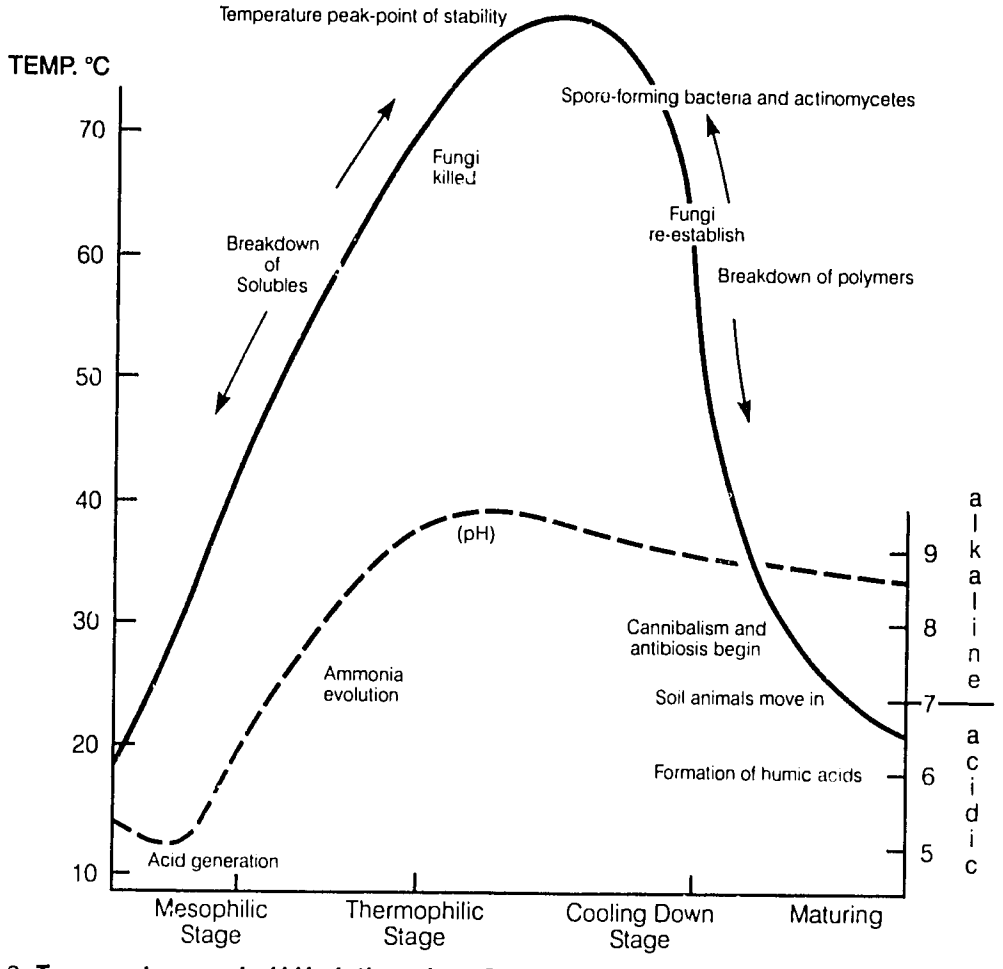

Figure 2: ***Temperature and pH Variations in a Compost Heap in Relation to the Major Biological Events During Composting* (after Dalzell *et al.*, 1979).**

initially, and turn slightly alkaline after few days. Regulating pH is important, because highly alkaline conditions lead to excessive nitrogen loss by volatilization as ammonia (NH_3). Nitrogen can be conserved by not adding wood ashes or limestone to the heap. In the past, limestone (calcium carbonate) was widely used. This usage persists today, but studies at Berkeley (Univ. of Calif. at Berkeley, 1953) have demonstrated that it causes significant nitrogen losses: The alkaline conditions caused by the limestone appeared to favor the loss of nitrogen as ammonia.

Wood ashes are even more alkaline than lime in most cases, so their use in composting should also be discouraged. They should be returned to the soil, however, as they are a good source of calcium, magnesium and potassium.

Layering of Materials

When building a compost heap, the layering of organic materials is essentially the same for either the pit or the stack method, assuming water, organic wastes and kraal manure are abundant.

First Layer (bottom layer): The role of this layer, which consists of coarse material like dry grass and leaves, is to help with aeration and prevent waterlogging, and to absorb leached nutrients from decomposing layers above. This layer is 10 centimeters thick.

Second Layer (organic waste materials): This layer consists of a variety of organic wastes to be decomposed. It absorbs plant nutrients from layers on top, and can be up to 15 centimeters thick.

Third Layer (animal manure): This layer consists of any type of animal manure, which serves as an activator and adds nutrients, especially nitrogen, which are necessary for microbial activity. It is 5 centimeters thick.

Fourth Layer (soil): This layer of 2 centimeters prevents escape of NH_3 gas from the decomposing layers below, and prevents escape of heat. It also adds mineral elements to the heap.

If necessary, water is added after the soil layer to ensure sufficient moisture. The above layers and watering are repeated until the heap is 1.5 meters high. The soil layer covers the top of the heap.

Air vents, which are optional, consist of poles inserted into the material.

Cover: This protects the heap from rain or too much sun. It should be constructed with locally available, inexpensive materials, such as clay and animal dung. In some areas, a cover of banana leaves during composting would be advantageous.

Turning the Compost Heap

Turning the heap is essential to facilitate mixing of organic materials, even water distribution, aeration and decomposition of the heterogeneous raw ingredients.

Within a week after completing the heap, the center should warm up to its maximum temperature of 60 C (140 F). The combined effects of heat, moisture, and microbial action weaken the fibrous strength of organic waste.

At this temperature, weed seeds and pathogens will have died. But at the bottom, sides and toward the top, the temperature drops rapidly. Material in this cooler region decomposes slowly, and noxious weed seeds and disease propagules may not be completely destroyed.

Normally, the first turning is carried out 14 days after heap building, and repeated every two weeks until the compost is mature. During each turning, water is sprayed as necessary. The number of turns required depends on the nature of the organic materials and the attention paid to aeration and watering. The addition of 2 centimeters of soil to the top after turning would reduce ammonia loss.

Compost Maturity

Compost is considered mature when the mass has cooled (mesophilic stage) and shrunk to less than half of the original volume. With the exception of twig parts, none of the original components should be recognizable. Mature compost has a friable texture, an earthy smell, and a dark brown color.

Compost Preparation Techniques in Certain Problem Areas in Tanzania

Some farmers in Tanzania intending to start making compost lack sufficient water and/or animal manures. Details for making compost under these conditions are listed below.

Making compost in areas without livestock (especially cattle) but with plenty of water:

Layer 1: Coarse plant materials, 15 centimeters.

Layer 2: Organic wastes and leguminous plant materials, 30 centimeters.

Layer 3: Soil, 2 centimeters.

Add water if necessary and repeat.

Making compost in areas where there is a water problem, but herbaceous plants (seasonal) and cattle are available:

In water-poor areas, the pit method can be used to conserve moisture. Herbaceous plant materials like legumes, elephant grass and fruit peelings can be used in compost preparation using the endogenous water they contain. The material is chopped into small pieces and laid in cattle buildings to be mixed with urine and excreta.

Layer 1: Coarse plant material, 15 centimeters.

Layer 2: Chopped herbaceous material, 30 centimeters.

Layer 3: Kraal manure, 10 centimeters.

Layer 4: Soil, 2 centimeters.

It is important that the herbaceous plant material layers be pressed against other layers so that moisture from the plant material will become available. The importance of the inner cover under such conditions is indispensable. The turning operation can commence after 20 days or longer, depending on prevailing conditions.

Composting of Kraal Manure Only:

Kraal manure is a significant nitrogen source which needs to be conserved. It is suggested that manure be piled in an area close to the kraal every two to four days. Immediately, 2 centimeters of soil should be placed over the manure, to protect it from sun and rain and to prevent loss of ammonia. If dry, carbonaceous material is available, it should be added as a bedding material to soak up liquid.

The layers should be alternated until the pile is about 1.5 meters high, or until management of the pile becomes too difficult. Once complete, the pile can be sealed off by clay and dung.

Trouble-Shooting in Compost Making

The most common problem in compost preparation is the failure of the pile to heat up quickly. Under normal conditions and with optimum proportions of carbon and nitrogen, the pile should heat up in one or two days. During this period, the compost heap passes through stages of warming-up (30 C to 40 C), peak temperature (60 C to 70 C), cooling down (ambient) and maturity.

If the pile does not heat, there is probably too much or too little moisture. The material in a compost pile should be uniformly moist; excess moisture excludes oxygen and reduces the process

of aerobic decomposition. If this occurs, allow the pile to dry and then rebuild it, mixing dry outer materials with moist inner materials. If the pile is too dry, sprinkle it with water to a point where free moisture can be squeezed out by hand. The optimum moisture content (wet weight) for composting is about 50 percent to 60 percent. When the compost is finished, the moisture content may be greatly reduced for easier handling.

The size of the pile also determines how fast the temperature will reach the thermophilic stage (peak temperature). Small piles lose heat faster than large piles, since heat loss is proportional to surface area, and heat generation is proportional to volume. The larger pile, having a smaller ratio of surface area to volume, loses relatively less heat. Pile size should be at least 4 cubic feet.

Compost piles containing low nitrogen relative to carbon will also heat up slowly. Although too much nitrogen does not retard heating, this condition is wasteful, since nitrogen is lost as ammonia. If the pile is deficient in nitrogen, add more nitrogen-containing materials such as green chop, fresh weeds, fresh manure and green crop residues. Be generous with it, then cut back on subsequent piles, using smell (ammonia) as a guide.

Finally, if the piles are not thoroughly mixed, decomposition may be slow. Chopping and turning will homogenize the pile and generate more heat.

REFERENCES

Anonymous. 1978. Garden compost. 3rd edition. The Soil Association, Haughley, Suffolk, England.

Dalzell, H. W., K. R. Gray and A. J. Biddlestone. 1979. Composting in tropical agriculture. Review Paper. Series #2. International Institute of Biological Husbandry, Ipswich, England. 36 p.

Golueke, C. G. 1973. Composting: a study of the process and its principles. Rodale Press Inc., Emmaus, Pa. 110 p.

Gotaas, H. B. 1956. Composting: sanitary disposal and reclamation of organic wastes. World Health Organization. Monograph Series #31. Geneva, Switzerland. 205 p.

Howard, A. 1945. An agricultural testament. Oxford Univ. Press, London. 253 p.

Howard, A. and Y. D. Wad. 1931. The waste products of agriculture, their utilization as humus. Oxford Univ. Press, London. 167 p.

Minnich, J. and M. Hunt (ed.). 1979. The Rodale guide to composting. Rodale Press Inc., Emmaus, Pa. 405 p.

Ngeze, P. B. 1976. Misingi ya Kilimo Bora. p. 98-99. T.P.H. Dar es Salaam.

Rodale, J. I. 1967. How to grow vegetables and fruits by the organic method. Rodale Press Inc., Emmaus, Pa. 926 p.

University of California at Berkeley. 1953. Reclamation of municipal refuse by composting. Tech. Bull. #9. Sanitary Engineering Research Project.

Wilson, E. B. 1948. A system of composting farm and village waste. E. Afr. Agric. For. J. 14:82-85.

———. 1957. Composting of town and village refuse. WHO/FAO course in human nutrition.

DISCUSSION

Methods of Compost Preparation

Q:(Samki, National Soil Service): What is the time between turnings? Could one week be suggested?

A:(Ngeze, CCM chairman, Kagera): No objection, depending on the nature of ingredients. Under ideal conditions, 14-day intervals have been recommended.

Q:(Mnzava, University of Dar es Salaam): We are advised that compost making using the pit method is a sanitary process. How do we ensure against such hazards as hookworms during compost making and handling, when the use of human excreta is considered?

A:(Liebhardt, Rodale Research Center): A dry process using ashes and human excrement has been developed and tested in Guatemala. This method was effective in controlling internal parasites.

A:(Harwood, Rodale Research Center): Handling human wastes is a high-technology process. One has to maintain a temperature of 60 C to 70 C for three to four weeks. In China, it is a sophisticated process.

Q:(Lwoga, University of Dar es Salaam): Have the authors considered the cost of operations in compost making that the farmers would face?

A:(Ngeze): When the farmer is made to understand the benefits of compost use, and adopts composting as a routine operation in handling organic materials available to him, the costs involved are usually minimal in comparison to the benefits.

Q:(Haq): What is the role of anaerobic organisms in organic matter decomposition?

A:(Liebhardt): There are always anaerobic areas in parts of the compost heap. Under this condition, rate of organic matter decomposition is low, and temperatures of 60 C to 70 C would not kill most of the anaerobes.

AGRONOMIC ASPECTS OF MANURE AND COMPOST USE

J. M. R. Semoka and B. J. Ndunguru, Faculty of Agriculture, Forestry and Veterinary Science, University of Dar es Salaam

W. C. Liebhardt, Rodale Research Center, Kutztown Pa. 19530

Usually, conventional farming systems consider nutrient cycles only in a chemical sense, placing them secondary to the addition of purchased nutrients. These purchased inputs may or may not increase the yield of the associated crop, and, in many instances, are not regenerative.

Kock (1982) states:

> *Sustainable approaches to agricultural development would include all input-saving technologies, whether these originate from traditional experience or from scientific experimentation. They would exclude by ecological criteria, destructive farming practices and, by economic criteria, costly, unsustainable high-input techniques. Use of this set of criteria implies that unsustainable practices cannot be called economic. Applying these criteria helps in the general orientation of agricultural strategies to cope with future demands.*

We would like to develop nutrient-creating and nutrient-conserving agricultural systems which rely on management as much as possible to provide nutrients. For example, legumes fix nitrogen and therefore remove inert nitrogen gas from the atmosphere and convert it into forms which can be used by plants. In a strict sense, nutrients or matter cannot be created, but their availability can be enhanced through management practices. To achieve this, the concepts of nutrient cycling must be understood.

Nutrient Cycling—An Overview

Nutrient cycling involves not only chemical, but physical and biological factors. Figure 1 presents the general nutrient flow in a soil for any element.

As the figure indicates, nutrient equilibria are extremely complex and dynamic, changing as the soil environment changes. Organic matter, water, temperature, oxygen, and soil pH largely influence the state of nutrients and their availability at a given time. The supply of any nutrient can be increased or decreased, short-term or long-term, by the level and type of management that the system receives.

Chemical, physical and biological strategies can be devised to increase nutrient supply and availability. However, rather than trying to achieve these goals only in the short term, a regenerative system—one that creates and conserves nutrients—seeks to manage these supplies over the long term.

Nutrient Availability and Stability in Compost

In most farming systems, nitrogen is the most crucial nutrient for crop production. In assessing the agronomic aspects of organic materials in agriculture, the following characteristics of these materials, and conditions associated with their use, should be evaluated and, where possible, quantified:

1) The mineralization rate of the different materials;
2) The residual effects from the use of the organic materials;
3) The effects of manures and compost on the physical properties of soils.

Figure 1: ***Generalized Nutrient Availability Diagram.***

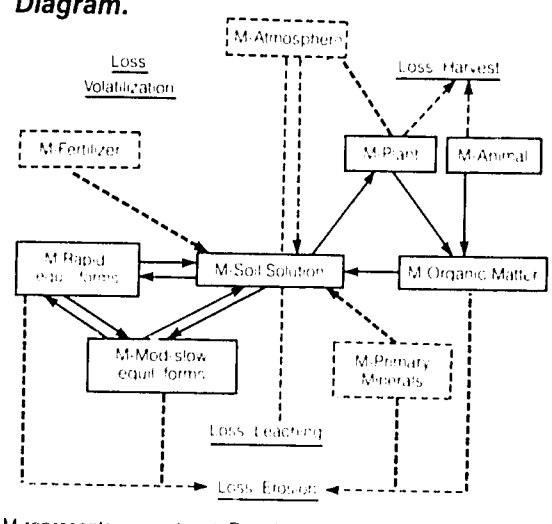

M represents any nutrient. Broad broken lines represent possible inputs. Narrow broken lines represent possible losses. Solid lines represent redistribution within the soil-plant-animal closed system.

Pratt *et al.* (1973) have proposed using a series of yearly mineralization rates, which they called decay series, to estimate parameters 1 and 2 above, with particular reference to N. They proposed that the rate of decomposition will depend on the N content of the material at the time of application, and suggested the mineralization rates shown in Table 1 for different manures.

The decay series 0.90, 0.10 and 0.05 for chicken manure means that 90 percent of the added nitrogen would be mineralized during the first year, while 10 percent and 5 percent of the remaining N would be mineralized during the second and third years, respectively. In subsequent years, the mineralization rate is expected to be 5 percent. Pratt *et al.* (1976) and Pratt and Castellanos (1981) have reported data supporting this hypothesis.

In a four-year field trial (1970 to '74) at the University of California, two types of manures were used for barley grown in the winter and sudangrass grown in the summer on a Hanford sandy loam soil. One manure was a liquid material collected from a feedlot, and the other a solid material from a dairy corral.

The liquid (90 percent water) was a fresh material hauled to the site and disked into the soil within 48 hours after application. Field research showed that 75 percent of the nitrogen in this liquid was available the first year after application, whereas only 45 percent of the nitrogen from the solid manure was available in the first year. Total nitrogen in the liquid manure was 4.5 percent on a dry weight basis, whereas the solid manure contained 1.6 percent N, so that 68 pounds of nitrogen were made available for each ton of dry weight

Table 1: **Mineralization Rates for Different Manures During the First 3 or 4 Years After Incorporation.**

Type of material	1st year	2nd year	3rd year	4th year
Chicken manure	0.90	0.10	0.05	—
Fresh bovine wastes, 3.5% N	0.75	0.15	0.10	0.05
Dry corral manure, 2.5% N	0.40	0.25	0.06	—
Dry corral manure, 1.5% N	0.35	0.15	0.10	0.05
Dry corral manure, 1.0% N	0.20	0.10	0.05	—
Liquid sludge, 2.5% N	0.35	0.10	0.05	—

Source Pratt *et al.*, 1973

Table 2: **Data for Composition of Manures and for Available N Estimated as Mineral N Plus Net N Mineralized During a 10-Month Period of Cropping in the Greenhouse.**

	%				Available N*	
Manure	Total N	Mineral N	Organic C	C/N	Holtville	San Emigdio
Composted dairy	1.97	0.030	24.0	12.2	13.6	20.8
Beef	2.56	0.023	36.9	14.4	27.5	40.3
Sheep	2.28	0.075	30.3	13.3	27.1	35.8
Composted dairy	1.91	0.030	19.3	10.1	7.7	13.6
Chicken	4.59	0.153	29.8	6.5	54.9	64.9
Composted chicken	1.70	0.215	11.0	6.5	34.4	34.8
Pig	3.86	0.142	38.2	9.9	37.7	46.9
Dairy	2.87	0.078	34.4	12.0	24.7	29.7
Dairy	1.99	0.037	31.6	15.9	13.1	23.8
Very old, composted dairy	2.14	0.056	14.3	6.7	4.4	6.2

*Percentage of total N

Table 3: **Nitrogen Content, Mineralized Nitrogen and Carbon, and Available Nitrogen During Greenhouse Cropping.**

Manure type	Total nitrogen (% of dry weight)	Mineralized nitrogen[1] (% of total nitrogen)	Mineralized carbon[2] (% of total carbon)	% of total nitrogen	Available nitrogen[3] Pounds per ton dry wt.	Available nitrogen[3] Pounds per 15 tons field wt.[4]
Chicken	4.6	48	33	65	60	600
Composted chicken	1.7	29	22	35	12	120
Pig	3.9	34	28	47	37	370
Beef	2.6	23	16	40	21	210
Sheep	2.3	20	15	38	17	170
Dairy	2.9	21	16	30	17	170
Dairy	2.0	9	10	24	10	100
Composted dairy	2.0	6	5	21	8	80
Composted dairy	1.9	6	5	14	5	50
Composted diary	2.1	5	2	6	2	20

[1]Nitrogen mineralized in 10 weeks of incubation in the laboratory
[2]Carbon mineralized in one week of incubation in the laboratory
[3]Nitrogen available during 10 months of cropping in the greenhouse
[4]Pounds of available nitrogen for a 15-ton application, assuming a field weight of 67 percent solids and 33 percent water

Figure 2: **Nitrogen Mineralized From Manure-Amended Samples of San Emigdio Soil Incubated in the Laboratory For 10 Weeks, Expressed as Percentage of Total N.**

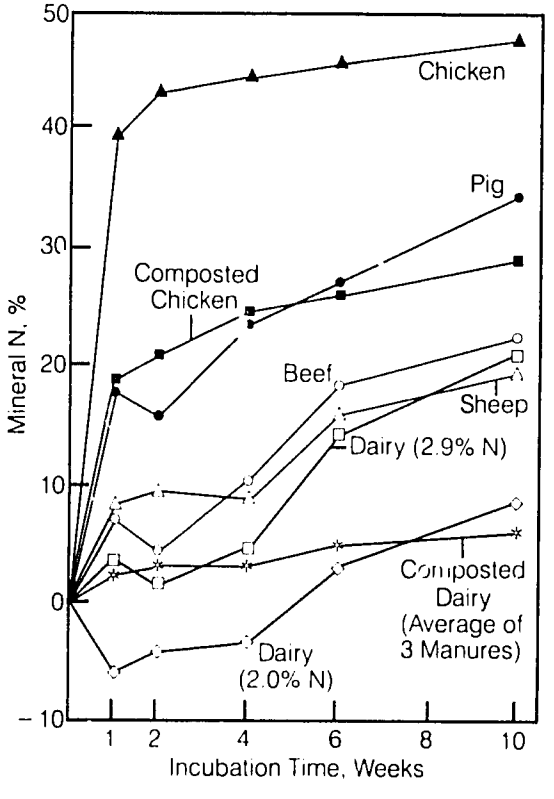

added, or from 10 tons of liquid weight. The solid manure gave only 14 pounds of N per ton of dry weight.

Further research on this subject with 10 manures and composts by Castellanos and Pratt (1981) showed that both the material and soil type determined nitrogen availability (Table 2).

In this case, available N was mineral N plus net mineralized N during a 10-month greenhouse cropping period, where barley (*Hordeum vulgare* L.) and sudangrass (*Sorghum sudanese*) were each harvested twice. Available N varied from about 5 percent in very old composted dairy manure to 65 percent in chicken manure.

The rate of N release over a 10-week period of each material in the San Emigdio soil is presented in Figure 2. The data shows that fresh chicken manure was decomposed at the fastest rate, while old dairy manures were decomposed at the slowest rates. Other manures were intermediate.

The dairy manure containing 2 percent N and a C/N ratio of 15.9 showed N immobilization during the first four weeks of incubation. Barley in this treatment yielded less than in the control in the first cutting.

Table 3 gives additional data on the set of manures used in the above studies by Castellanos and Pratt (1981). For instance, composted chicken

manure had much less total N than fresh chicken manure, and that N was about half as available as the N in the fresh manure. Thus, the composted material per unit weight was about one-fifth as valuable in supplying available N as the fresh manure (Table 3, column 5).

The three composted dairy manures had an average total N concentration of 2.01 percent compared with an average of 2.43 percent for the two manures collected from dairy corrals. The data suggest that the composted dairy manures, excluding the very old composted material, provide about 50 percent as much available N as the fresh dairy manures. The very old composted manure provides about 20 percent as much.

The data show that composting produces materials with highly stable N and C that is independent of total N and C contents. Composting reduces odors and creates better physical properties, but dramatically reduces the value of the manure as a N fertilizer.

Pratt and Castellanos (1981) have also shown the practical implications of the nitrogen release rate of these materials. The last column in Table 3 shows the pounds of nitrogen available from a 15-ton per acre application of air-dry manure assumed to contain 33 percent water. It is obvious from the data that 15 tons per acre of the fresh chicken manure with 4.6 percent nitrogen is too much. A rate of 5 tons per acre would be appropriate for most situations. But for composted chicken manure, 15 tons per acre is needed to supply even a modest amount of available nitrogen. While for the old, composted dairy manure, applying 15 tons per acre would provide only 20 pounds of available nitrogen.

Data from both the field trial and the greenhouse show that the nitrogen available from manures depends on the type of animal, the nitrogen content, and the stability of the nitrogen or the ease with which it is mineralized.

Manures aged by wetting and drying as they accumulate on floors or under pens lose nitrogen by volatilization of ammonia; the remaining organic nitrogen is more resistant to mineralization. The extreme of this stabilization process takes place during composting, which produces materials with less odor and good physical properties, but with lower nitrogen availability. Thus, for optimizing nitrogen availability, it is best to apply the manure and mix it with the soil as soon as it is produced.

No data similar to those for N are available for phosphorus release. Although the total amount of P applied from manures can easily be estimated, the quantity mineralized during a given period is difficult to come by. Brady (1979) estimated that about one-sixth of the organic phosphorus present in animal manures may be mineralized during the first year of decomposition.

Figure 3: **Hypothetical Yield-Nutrient Relationship**

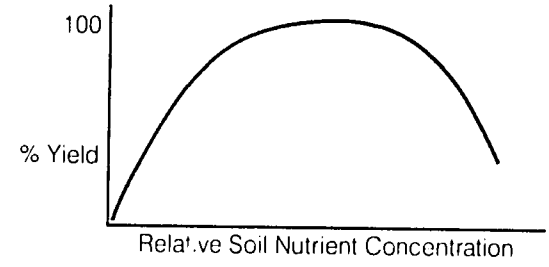

Potassium exists primarily as the potassium ion even in biological systems. Therefore, it will be highly soluble and readily available to plants. However, due to its high solubility, leaching losses may be large; ways of minimizing this loss during composting should be practiced.

Calcium and magnesium are less soluble than potassium, so leaching should not be a problem. Availability of these nutrients results primarily from a combination of biological activity and inorganic chemical equilibria.

Sulphur availability, like that of phosphorus, is largely a result of biological activity. The concentration of both nutrients in most biological systems is very similar.

The micronutrients in compost should supply the needs of most crops.

Crop Response to Compost and Manures

Figure 3 demonstrates that yields increase dramatically with small compost applications in infertile soils and decrease per unit of input as nutrient sufficiency is approached. In using manure or compost, near optimum application on all land is a wiser strategy than using it very heavily in some areas and not in others, assuming soil conditions are equal. This was demonstrated by Hileman and Morelock (1982), who worked with cotton gin compost on green beans in Arkansas.

Calculations from their data of total analysis of the ash indicated that the N, P_2O_5 and K_2O ratio was nearly 2-to-1-to-1. Therefore, a 3-ton application would supply approximately 118 pounds of N, 60 pounds of P_2O_5, and 70 pounds of K_2O at 20 percent moisture. The water-soluble analyses showed that nitrogen and potassium were quite soluble, and that there was a sizable amount of soluble phosphorus. These analyses indicated that an adequate rate of compost would supply worthwhile amounts of soluble N, P_2O_5 and K_2O.

Table 4: **Yields of Fresh-Weight Greenbeans and Above-Ground biomass in Compost-Treated Plots. (Average of Four Replications)**

Compost amendment	Greenbeans	Above-ground Biomass
(tons/acre)	*tons yielded per acre*	
0	3.37	6.10
3	4.49	8.07
6	4.93	9.28
9	4.81	8.98
12	4.73	9.08
15	5.17	10.22

L.S.D. at 5% for greenbeans = 0.95
L.S.D. at 5% for biomass = 1.63
L.S.D. at 1% for biomass = 2.25

The yield obtained by applying three tons of compost is given in Table 4. All plots with compost had significantly higher yields of both beans and biomass than plots without compost.

Augustburger (1982) carried out experiments in two sites in Bolivia, comparing compost and chemical fertilizers in potato production. Chicken and cow manure composts were prepared using the "Indore" and compost heap methods, and both fresh and composted manures were used in experiments located in the villages of Torolapa and Pairumani.

In the Torolapa experiment, 10 tons per hectare of each organic material was applied. Chemical fertilizers were applied at rates of 80 kilograms of N and 120 kilograms of P_2O_5 per hectare when potatoes were sown. The crop of "oca" (*Oxalis tuberosum*) that was sown the following year received no fertilization of any kind.

Fresh chicken manure produced the best yield in the first crop (potato), and the lowest in the second ("oca"). This was probably due to the quick release of nitrogen, high availability of phosphorus, and the neutralizing effect of chicken manure, which is alkaline (pH 9.0), in an acid soil. The chemical fertilizer was a mixture of urea and diammonium phosphate, which increases the acidity of an already acid soil. This fertilizer produced inferior results compared with fresh chicken manure in the potato crop.

In the Pairumani experiment, the same level of nitrogen was used in all applications; organic manures were distributed according to their nitrogen content. Of the crops used in the rotation—potato/grain corn/potato/silage corn—only the potato crops received fertilization.

Nitrogen was applied at 80 kilograms per hectare in 1980, and at 140 kilograms per hectare in 1981. Phosphorus application rates were 120 kilograms per hectare and 140 kilograms per hectare as P_2O_5, respectively in 1980 and 1981. There were no adjustments in the amount of each organic manure applied according to their respective concentrations of P, K, Ca and Mg.

In Pairumani, potato crops in 1980 and 1981 were grown in the dry season using flood irrigation. The highest yield was achieved with composted chicken manure, because Bolivian farmers usually scatter manure and chemical fertilizer on top of the potato seed instead of under it. Scattering fresh chicken manure or chemical fertilizer on top can occasionally burn the seed sprouts and delay growth for more than two weeks. Obviously, this reduces the yield. Using compost does not harm the sprouts, and facilitates development of young potato plants. It also reduces damage by insects such as flea beetle.

Table 5: **Yields Obtained With Different Manures and Fertilizers in Torolapa, 1980 to 1982.**

Manures/Fertilizer	1st crop: 1981 potato	2nd crop: 1982 "oca"
	(tons/ha)	*(tons/ha)*
Chicken manure/fresh	36.05 a[1]	3.40
Chicken manure/composted	24.38 bc	5.93
Cow manure/fresh	20.56 c	5.00
Chemical fertilizer	29.05 c	6.28
Control	9.31 d	2.35
P 0.05	5.5	NS

[1]Data in the same column followed by the same letter are not significantly different at the 0.05 probability level.

Table 6: **Yields Obtained With Different Manures and Fertilizer in Pairumani (1980 to 1982).**

Manure/ Fertilizer	1st crop: 1980 potato	2nd crop: 1981 grain corn	3rd crop: 1981 potato	4th crop: 1982 silage corn
	(tons/ha)	*(tons/ha)*	*(tons/ha)*	*(tons/ha)*
Chicken manure/ fresh	34.59 b[1]	8.96	20.90 c	18.63
Chicken manure/ composted	38.87 a	9.14	25.55 a	19.17
Cow manure/ fresh	34.32 b	8.81	23.18 b	17.80
Cow manure/ composted	34.61 b	9.00	22.13 bc	18.45
Chemical fertilizer	34.12 b	9.29	14.07 d	17.50
Control	26.03 c	8.44	16.33 e	17.32
Average	33.76	8.94	20.69	18.14
P 0.05	4.91	NS	3.63	NS

[1]Data in the same column followed by the same letter are not significantly different at the 0.05 probability level

In the second potato crop (1981), a decrease in yield was observed in comparison with the first potato crop (1980). The potato yield obtained in 1981 with chemical fertilizer was significantly lower than the control.

Neither corn grain nor corn silage gave a statistically significant response to the residual fertilizer left in the soil after the potato harvest, since the fertility of the soil was quite high.

Russell (1973) discusses a little-understood factor of considerable importance to nutrient utilization: Rotting material in the soil will usually add more humus and nutrients than if it is first composted and then added to the soil. Experiments have been done at Rothamsted for a number of years comparing a plowed-under dressing of straw and nitrogen with the same quantity of straw and nitrogen rotted in a compost heap and then applied to the land. The plowed-in straw has always given a better yield than the compost. This may be due to losses of nitrogen and potassium during the composting process.

Russell (1973) reports that Acharya and his co-workers in 1945 and 1946 found that nearly one-quarter of the nitrogen in a mixed organic refuse, whose C/N ratio was initially 32, was lost during the first 20 weeks of composting, probably by volatilization as ammonia. But there was no net loss if soil was added to the refuse. Presumably, the ammonia released during decomposition is absorbed by the clay in the soil and then nitrified. Potassium is lost if any liquid drains out of the compost heap; straw compost can be a useful source of potassium for the crop.

The nutrient content of some manure samples from Tanzania and the effects of manures on the yields of several crop species have been reported by Kasembe, *et al.* (1983). In general, manures from Tanzania had lower N content than those from the United States quoted above. This is due to low animal nutrition and poor handling methods. Some manures used in Tanzanian studies were obtained from kraals without any cover, causing greater nutrient losses. Despite the low nutrient contents of Tanzania's manures, similar trends in relation to their effects on crop yields were obtained.

Apart from their chemical effects, compost and manures also improve a number of soil physical properties, such as aggregate stability, bulk density, porosity, hydraulic conductivity and water-holding capacity. Biswas and Khosla (1971) have reported data showing the positive effects of manures and compost on these properties. However, data correlating the improvement in these properties with yields is lacking.

Using information from Samki *et al.* (1981), we can attempt to determine practical manure application rates for Tanzania. Table 7 provides fertilizer recommendations for maize in each of Tanzania's ecological zones. These rates are largely based on crop response data, so they provide a good basis for making estimates of manure or compost rates. Nitrogen requirements generally

Table 7: **Optimum Fertilizer Rates For Maize in Tanzania Ecological Zones.**

Ecological Zone	Regions Covered (Partially or Wholly)	N	P_2O_5	K_2O
		Optimum fertilizer rate (kg/ha)		
1	Lindi	—	—	—
2	Mtwara	80	40	30
3	Morogoro	50	50	—
4	Mbeya	80	60	—
5	Tanga, Dar es Salaam	—	—	—
6	Tanga	20 to 40	40	—
7	Arusha, Kagera, Mara, Kiliminjaro	50	40	—
8	Iringa, Rukura, Lindi	60	40	—
9	Lindi	70	60	—
10	Kagera	50	40	—
11	Tabora, Shinyanga, Singida	70	60	—
12	Kigoma, Rukura	50	50	—
13	Coast, Tanga	—	—	—
14	Kiliminjaro, Arusha	80	60	—
15	Shinyanga, Mwanza	—	—	—
16	Tabora, Dodoma	—	—	—
17	Arusha, Kiliminjaro	—	—	—
18	Morogoro, Mwanza	40	—	—
19	Mwanza, Shinyanga, Mara	—	—	—
20	Mwanza, Mara, Shinyanga	80	40	—

range from 40 to 80 kilograms per hectare for maize.

The data presented so far demonstrates that there is considerable variability in both content and availability of nitrogen in manures and composts. Table 8 presents some hypothetical amounts of nitrogen available from a 5,000-kilogram per hectare application of compost. The same would be true for manure. For example, ecological zones 3, 7 and 10 have a recommendation of 50 kilograms per hectare of nitrogen. If our hypothetical compost had 1.5 percent nitrogen, and 40 percent of the nitrogen was available as determined by crop response, 7,500 kilograms of compost per hectare would supply 45 kilograms of N per hectare, which nearly satisfies the requirements in these zones.

At this stage, the use of manures and compost should be emphasized on Tanzania's small farms, while appropriate systems for large-scale farms are being developed.

Table 8: **Available Nitrogen As Affected by Nitrogen Content and % Nitrogen Availability, With An Application of 5,000 kg/ha of Compost.**

% Nitrogen Availability*	% Nitrogen Content of Compost 0.5%	1.0%	1.5%	2.0%	2.5%	3.0%
	kg available nitrogen					
20	5	10	15	20	25	30
30	7	15	22	30	37	45
40	10	20	30	40	50	60
50	12	25	37	50	62	75
60	15	30	45	60	75	90
70	17	35	52	70	82	105
80	20	40	60	80	100	120

*Needs to be determined by crop response experiments in the field

Future Research Needs

Future needs will be based on the principles of a regenerative, self-reliant system. Since the major problem is nitrogen, research should concentrate on using, providing, and conserving this soil nutrient. Potential research topics include:

1) Manure handling and utilization, with emphasis on nitrogen;
2) Compost handling and utilization, with emphasis on nitrogen;
3) Response of crops in the field to various composts and manures;
4) Development of biological and chemical criteria to estimate the value of compost and manure in a crop rotation;
5) Development of information on other nutrients besides nitrogen;
6) Development of cropping patterns which increase the use of legumes for food, compost, and green manure.

REFERENCES

Acharya, C. N. 1945. 1946. Indian J. Agric. Sci. 15:214, 16-90.

Augustburger, F. 1982. Agronomic and economic potential of manure in Bolivian valleys and highlands. *In* Lockeretz, W. (ed.). Proc. of 4th International Federation of Organic Agriculture Movements (IFOAM) Conference. Cambridge, Mass. August 18–20, 1982. (in press).

Biswas, T. D. and B. K. Khosla. 1971. Building up organic matter status of the soil and its relation to the soil physical properties. Proc. Int. Symp. Soil Fert. Eval. 1:831-842. New Delhi.

Brady, N. C. 1979. Nature and properties of soil. Macmillan Publishing Co., N.Y. 639 p.

Castellanos, J. Z. and P. F. Pratt. 1981. Mineralization of manure nitrogen: correlation with laboratory indices. Soil Sci. Soc. Am. J. 45:354-357.

Hileman, L. H. and T. E. Morelock. 1982. In-row application of compost evaluated in greenbean field tests. Arkansas Farm Research. 31(6):5-6.

Kasembe, J. N. R., J. M. R. Semoka and J. K. Samki. 1983. Organic farming in Tanzania. Presented at Workshop on Resource-Efficient Farming Methods for Tanzania. Morogoro, Tanzania. May 16–20, 1983.

Kock, W. 1982. Principles and technologies of sustainable agriculture in tropical areas: a preliminary assessment. Draft copy. The World Bank, Washington, D.C.

Pratt, P. E., P. E. Broadbent and J. P. Martin. 1973. Using organic wastes as nitrogen fertilizers. California Agriculture. June 1973.

Pratt, P. E., S. Davis and R. G. Sharpless. 1976. A four-year field trial with animal manures. II. Mineralization of nitrogen. Hilgardia. 44(5):113-125.

Pratt, P. E. and J. Z. Castellanos. 1981. Available nitrogen from animal manures. California Agriculture. July-August 1981:24.

Russell, E. W. 1973. Soil conditions and plant growth. 10th edition. Longmans, London. 849 p.

Samki, J. K., J. F. Harrop, H. C. Dewan and F. Mhany. 1981. Fertilizer recommendations related to ecological zones in Tanzania. Unpublished report. National Soil Service, Agricultural Research Institute, Mlingano, Tanga.

DISCUSSION

Agronomic Aspects of Manure and Compost Use

Q: (Lwanda): How do you calculate the amount of compost from a heap to cover an area—say, one acre? How much compost should be made in each heap?

A: (Semoka, University of Dar es Salaam): Take a measurement of a cart and determine the quantity of compost it can hold. A given application rate can then be met by spreading the required amount per unit area. Amount made in each heap depends on size of heap and nature of ingredients.

Q: (Haq): What will happen to soil fertility if there is no water?

A: (Semoka): We assume that water is sufficiently available.

Q: (Lwoga, University of Dar es Salaam): Leguminous plants have high nitrogen. Can't they be used in manures?

A: (Semoka): A paper on nitrogen self-sufficiency will discuss this.

MANURE AND COMPOST HANDLING IN TANZANIA

E.M. Ngaiza, Center for Agricultural Mechanization and Rural Technology, Arusha

Handling manure or compost is a tedious job. The recommended amounts, which range from 17.5 tons to 50 tons per hectare, are so large that a peasant farmer will find it very difficult to follow them without proper equipment. Manure and compost are usually moist, sticky, dirty and heavy, characteristics which further emphasize the need for proper equipment.

Storing compost requires a structure with a water-tight floor to prevent leaching of nutrients, and a roof to prevent rain from spoiling it. In Tanzania to date, kraals, which are commonly used in areas with large numbers of livestock, do not meet these requirements. Therefore, during the rainy season, the manure or compost will be too wet and poor. Handling the materials during this period becomes very difficult, too. Therefore, as far as structures are concerned, there is a lot to be done in order to get good quality manure or compost.

Handling equipment is not well-developed, either. Most farmers still use pans, tins and locally sown containers to haul manure and compost to the fields. As a result, the recommended quantities are not applied. Assuming that there were enough produced, as is the case in some regions, lack of durable, large and efficient equipment would hamper the efforts of transporting the materials to the farm.

Many farmers, most of whom are women, still carry compost on their heads. Therefore, they can carry only small quantities at a time. Take, for example, the recommendation of 17.5 tons per hectare, and a farmer using one "debe," which can carry, at most, 20 kilograms. If she had to travel 500 meters from home to the field, the total distance traveled could be calculated as follows:

S = total distance traveled in kilometers to cover one hectare.

R = recommended rate of application in kilograms per hectare.

C = capacity of equipment used to haul the compost in kilograms.

D = distance from home to the field in kilometers.

$$S = \frac{2DR}{C}$$

$$S = \frac{2 \times 0.5 \times 17{,}500}{20}$$

$$S = 875 \text{ kilometers}$$

If one used an oxcart that carries one ton per trip, the distance traveled would be calculated as follows:

$$S = \frac{2 \times 0.5 \times 17{,}500}{1{,}000}$$

$$S = 17.5 \text{ kilometers}$$

This equipment, apart from reducing the distance traveled, puts no weight on the farmer himself, but the animal. It immediately relieves him of the burden to carry the manure or compost. This example illustrates the need for proper equipment for handling such materials.

Compost-Handling Equipment in Tanzania

Compost-handling equipment in Tanzania falls into two main groups: traditional handling equipment, and improved or modern handling equipment.

The first group, which includes tins or pans of various sizes, is made of simple materials put together by local craftsmen. The containers are usually carried on the shoulder, head or back. Their capacity is usually small, and it will take a long time to haul manure or compost to complete one hectare's requirement.

The second group is usually of larger capacity uses wheels in transportation, and relieves the farmer from the burden of carrying the material himself. This group includes wheelbarrows, handcarts, ox-drawn carts and tractor-drawn carts. Carts range from those with a single wheel, to those with a double axle with four to six wheels.

These are usually loaded and unloaded manually or mechanically. In areas where the tractor is out of reach to farmers, the equipment commonly used is animal-drawn. This is in line with the national policy on agricultural mechanization. Improvements on oxcarts are being made to make them unload automatically in the field. Improved equipment can be made locally using local skills and materials.

Another important aspect of handling equipment is tools for loading, unloading and spreading. When manure or compost is loaded by hand in small quantities, it increases the burden on the farmer. Some of the tools include the hand-hoe, shovels, forks, and, while in the field spreading, rakes. On designs that spread automatically in the field at a constant rate of output, the need for using tools in the field is minimized. The shortcomings of these tools are unevenness of spreading, and high demand for man's energy.

Equipment Design Considerations

There are several factors which need attention when designing compost-handling equipment. These are:

a) The source of power to haul the manure or compost. When power available is small, the size of the equipment also becomes small, and vice versa.

b) The material used to construct the equipment and its characteristics. Under local conditions, a wooden structure would be more easy to make than a metal one. But wood is heavy and rots easily; this could be a limitation. Choice of raw materials is limited by the amount of money available.

c) Cost of equipment. The final product, after design, should be inexpensive but good. A lot of farmers have meager incomes, and will not invest in equipment that will almost exhaust their capital.

d) Operational quality. Equipment that will do the job with minimum adjustments and maintenance will be preferred to that which is complicated. Remember, our farmers are meeting this experience for the first time.

e) Available skills in the village. A place like CAMERTEC designs prototypes that can be made in rural areas by village craftsmen. There are usually some carpenters and blacksmiths who, with little training, can master the procedures in making a particular piece of equipment. This is important if technology has to spread fast to a lot of people.

Equipment Demand and Supply

The demand for handling equipment in Tanzania is far greater than the supply. The issue of farm implements in general is of great concern at present, and handling equipment is no exception. Many regions could produce their own equipment if village workshops or district workshops were set up. The skills involved are simple. A survey of some regions revealed the following demand for oxcarts (Table 1).

Table 1: **Oxcart Requirements in Selected Regions, 1982/83.**

S/NO.	Region	Oxcart Requirement	Unit Price in Tsh.
1.	Arusha	1,810	6,000 to 10,000
2.	Dodoma	300	4,500 to 10,000
3.	Iringa	2,525	3,500 to 4,500
4.	Kigoma	80	1,200 to 2,000
5.	Pwani	20	4,000 to 6,000
6.	Rukwa	200	7,000 to 8,000
7.	Shinyanga	1,000	4,500 to 9,000
8.	Mwanza	2,000	7,000 to 12,000
9.	Singida	2,000	6,000 to 15,000
10.	Morogoro	300*	6,000 to 10,000
11.	Mara	1,000*	6,000 to 10,000

Other regions have not responded.
*Estimate based on past request

This kind of demand shows that the people are ready to use this particular handling equipment, but they have no supplier. At present the following places are manufacturing handling equipment:

a) CAMERTEC headquarters, Arusha
b) CAMERTEC branch, Nzega
c) Kahama rural craft workshop
d) Kigwe—Dodoma rural craft workshop
e) Songea rural craft workshop
f) Mbeya rural craft workshop
g) Musoma rural craft workshop
h) Malya—Mwanza rural craft workshop
i) Some SIDO workshops, e.g. SIDO Singida
j) Themi Farm Implements, Arusha
k) Some private workshops
l) Some missionary-run workshops
m) Some government departments, e.g. Magereza

Toward Self-Reliance in Agricultural Mechanization and Compost Handling

Together with using compost in agricultural production, the whole emphasis on better agricultural mechanization should be taken seriously. It is clear that production per person is determined by the tools used. In order for Tanzania to increase crop production, better implements, especially those drawn by draft animals, should be used.

In drawing up plans to spread implements to the farmers, regions have to survey their own requirements for manure- and compost-handling equipment. The Center for Agricultural Mechanization and Rural Technology has enough experience today to help set up production units at regional, district and village levels. What is required is a plan drawn by the region, and an allocation of resources to establish and run such workshops. Tanzania cannot rely on a few large factories to satisfy national demand for farm implements. Each region will have to establish local requirements and produce equipment to suit local conditions. CAMERTEC has proven prototypes that can be used immediately.

The various institutions that could produce farm equipment and manure- or compost-handling facilities with large capacity include:

a) The Tanzania Agricultural Research Organization (TARO)
b) Ministry of Agriculture Training Institutes (MATIs)
c) Prisons
d) JKT
e) Technical schools
f) Ujenzi workshops
g) Crop Authorities workshops
h) Some folk-development colleges (former FTCS)
i) Some agriculture-based secondary schools

These institutions do not require much additional capital to produce agricultural machinery. In some cases, they do not even have the handling equipment themselves. But, as a self-reliance measure, they ought to be well-equipped. This will be an example to nearby farmers, and any extra production can be sold to neighbors. It is the duty of regions to set up production centers and utilize regional mechanization officers to guide production.

Strategy for Handling Manure and Compost in the Future

The problems of handling manure and compost are far from being solved. The idea of using these materials is timely and relevant, but, in order to handle such large quantities of organic matter, a farmer will need larger equipment which reduces his burden.

In the future, districts and villages should look into local production possibilities of handling equipment. The present practice of using man to carry all the load on his head should be discouraged, and the authorities must provide farmers with better facilities in order to promote use of manure and compost.

Editor's Note: **Following this paper, another paper titled "Manure and Compost Handling: A Summary of Methods and Practices Used by Advanced Farmers" was presented. The author was Manuel C. Palada, of the Rodale Research Center, Kutztown, Pa., 19530.**

DISCUSSION

Manure and Compost Handling in Tanzania

Q: (Kapande, MATI, Ukiriguru): Where there are no oxen as a power source, how best can compost be handled?

A: (Ngaiza, CAMERTEC): Human power and other equipment can be employed. For example, carts and other wheeled equipment can be used.

Q: (Mwambene): I wonder whether donkeys and horses can be employed to carry compost on their backs.

A: (Ngaiza): A donkey cart has been designed for use as employed for these pack animals. Perhaps handling horses in this country is a rather difficult issue.

Q: (Mutagwaba): Could litter from trees be used in composting?

A: (Ngeze, CCM chairman, Kagera): Provided the materials can provide a good mix, they can be used. The critical factor is the carbon/nitrogen ratio.

NITROGEN SELF-SUFFICIENCY

W. C. Liebhardt, Rodale Research Center, Kutztown, Pa. 19530

In many countries, nitrogen self-sufficiency is achieved by the use of both biologically and chemically fixed nitrogen. Cost of the latter form is now becoming prohibitive, because energy costs are increasing dramatically. Therefore, farming systems which rely on biological nitrogen are becoming increasingly important.

Biological Nitrogen in Temperate Zones

In the United States, biologically produced nitrogen is becoming more important as the price of nitrogen fertilizer increases. Voss and Shrader (1979) presented information on the effectiveness of biological nitrogen in Iowa (Table 1).

After the first 10 years of rotation studies at some locations, data indicated that similar corn yields could be obtained whether the source of N was provided by legumes or by fertilizer. Recent summaries of data, however, indicate that yields of first-year corn after meadow are greater than subsequent years of corn, particularly continuous corn, regardless of the amount of N furnished. These are averages of the corn yields from all comparable rotations at each location. There is a downward trend in corn yields as the frequency of corn in a rotation is increased.

There appears to be little difference in the effect of the frequency of a legume in a rotation on corn yields. For example, corn yields are very similar regardless of whether corn follows either two years of meadow, one year of meadow, or soybeans. In each case, the yield of corn following a legume is higher than that of continuous corn.

Bin (1983) reviewed China's potential for using leguminous green-manure crops to maintain or increase the amount of inexpensive biological nitrogen. Owing to the very limited per capita possession of farmland (only 0.1 hectare) in China, green-manure crops and other crops compete for space and time. In fact, this competition is the contradiction between land utilization and land upkeep. Properly coordinating these conflicting needs is not only a prerequisite for the cultivation of green-manure crops, but also a basis of arranging the place of the green manure in the crop-planting system. Table 2 summarizes how some green-manure crops are used and how much nitrogen is brought into the system.

Among the green-manure crops now cultivated in China, most belong to the legume family. These plants are symbionts of *Rhizobium*, capable of fixing large amounts of nitrogen. The amount of N fixed by the green-manure crop is related to the biomass produced, just as the biomass is affected by different methods of cultivation. Usually, a green-manure crop fixes at least 30 kilograms of nitrogen per hectare, and would reach up to 340 kilograms per hectare if it should get 7,500 kilograms per hectare of biomass (fresh weight).

Table 1: **Effect of Fertilizer N on Yields of Corn in Different Crop Rotations at the Clarion-Webster Research Center, 1971–78.**

kg/ha	Cont. C	**C**CCO,	C**C**CO,	CC**C**O,	CSbCO,	CSb**C**O,	**C**COM	C**C**OM	**C**OMM
				metric tons/ha					
0	3.1	6.3	4.7	3.8	6.4	6.5	8.3	5.9	8.8
67	5.8	7.6	6.6	5.7	8.0	7.4	8.0	7.2	8.1
134	7.1	7.8	7.6	7.6	8.3	8.0	8.3	7.5	8.6
201	7.4	8.1	7.9	7.6	8.1	8.1	8.1	7.8	8.3

X = legume catch crop, crop in bold type is related to yield.

Table 2: **Amounts of Nitrogen Fixed by Different Kinds of Green-Manure Crops.**

Green-manure crop	Method of cultivation	Yield of aerial parts, fresh wt., t/ha	Nitrogen fixed, kg/ha
Milk vetch	Grown for one season in winter	22.5 to 75	101.2 to 337.5
Sesbania	Grown alone for one season	22.5 to 75	112.5 to 375
	Interplanted in summer	11.2 to 30	56.2 to 150
Sunn hemp	Grown as catch crop in summer	15 to 37.5	60 to 150
Sweet clover	Grown for the whole year	30 to 60	150 to 300
	Interplanted at the early stage of corn	7.5 to 11.2	37.5 to 56.2
Vicia sativa	Grown as catch crop in winter	11.2 to 22.5	56.2 to 105
	Grown alone for one season	22.5 to 45	105 to 210
Azolla	Grown prior to transplanting rice seedlings for 20 days	22.5 to 45	45 to 90
	Grown prior to transplanting rice seedlings for 30 days	37.5 to 75	75 to 150
	Interplanted with rice for 20 days	15 to 22.5	30 to 45
	Interplanted with rice for 40 days	37.5 to 60	75 to 120

Nitrogen in the Tropics

Nitrogen is crucial to crop production and to the protein availability to tropical people. Acid soils limit available protein by reducing nitrogen fixation by leguminous plants, which convert the nitrogen of the atmosphere into available forms.

Plant-available nitrogen is derived from organic matter, leguminous nitrogen fixation, fertilizers and animal manure. The main source of nitrogen in the Tropics is organic matter. Therefore, practices which add organic matter to the soil are essential. Organic matter not only provides nitrogen, but improves the soil's physical condition and water-holding capacity, increasing water to plants and decreasing the soil temperature.

Nitrogen Supply Process

Nature has provided the nitrogen for crop production since the beginning of time. However, seldom has it provided an abundance of nitrogen for sustained periods of crop production on the same land. Moreover, natural supply processes seldom provide enough plant-available nitrogen to achieve the level of food and fiber production needed to meet the demands of present-day crop production.

Bartholomew (1972), states that the natural supply processes include: 1) mineralization of nitrogen from soil organic matter and from crop residues, and the reverse process of immobilization in the decomposition of plant and animal debris and soil organic matter; 2) fixation of nitrogen from the atmosphere, largely through biological processes; and 3) addition of nitrogen through rain and other forms of precipitation.

Soil organic matter is an important source of nitrogen for crop production. However, soil nitrogen is not inexhaustible. It declines as it is used by crops harvested from the land. Nitrogen in soil is largely organic, replenished by periodic additions of fresh plant or animal residues.

Under normal conditions, the nitrogen added to the organic supply in the soil each year through crop residues (immobilization) is unavailable to plants. However, through biological decomposition, organic nitrogen in the soil is continuously converted to the inorganic form (mineralization), which is available to plants.

Under any sustained system of crop and soil management, these two processes tend to balance each other in magnitude (Bartholomew and Kirkham, 1960). When this balance is attained, the system is considered to be in equilibrium.

The implications and consequences of an equilibrium in the soil's organic nitrogen need to be emphasized. At equilibrium, the amount added to the supply of organic nitrogen is essentially balanced by a like amount of decomposition. The total quantity of soil nitrogen remains unchanged

and the net amount supplied to a crop is zero (Bartholomew, 1972). Forest soils and other virgin lands tend to build up organic matter, accumulating as much as 10,000 kilograms of nitrogen per hectare. During the first years of cultivation, these soils may supply up to 400 kilograms of available nitrogen per hectare. After long periods of cultivation, the soil's organic matter becomes exhausted, since it is the major source of available nitrogen. Unless legumes are grown, or the soil is fertilized with nitrogen, the annual available nitrogen is depleted, except for the limited amount from rainwater and nonsymbiotic nitrogen fixation.

Many major land areas of the Tropics have been cropped for extended periods, and the organic matter stored under virgin conditions has been dissipated. With little or no use of nitrogen fertilizer, tropical crop yields reflect the paucity of the natural nitrogen supply from rainwater and nonsymbiotic nitrogen fixation.

Figure 1: **Pathways for Flow of N From Legumes to Other Crops.**

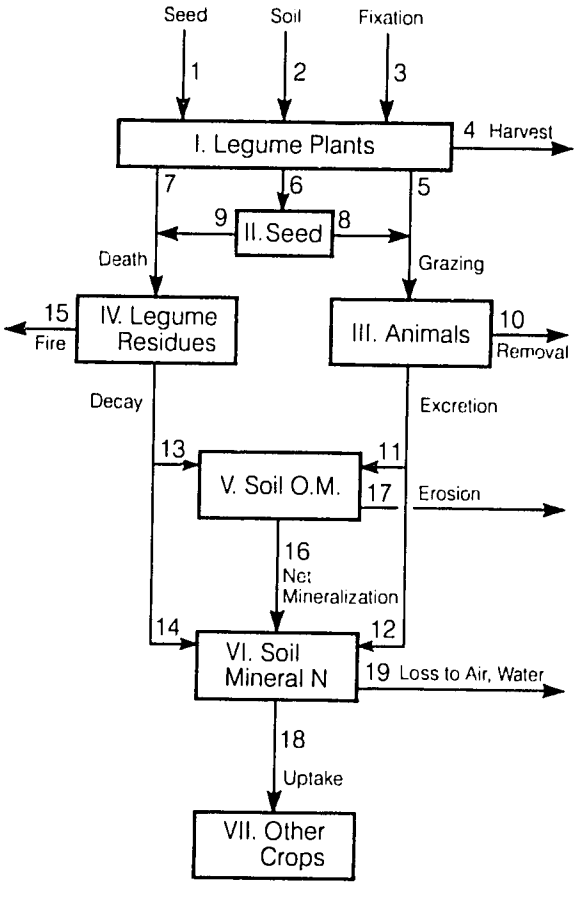

Corn yields of 600 to 1,200 kilograms per hectare, and wheat yields of 400 to 800 kilograms per hectare, require a nitrogen supply only a little larger than could be expected from rain and from nonsymbiotic fixation. Yields this poor remove no more than 15 kilograms of nitrogen per hectare from the land in the harvested grain products. Such minimal yields can be sustained for a long time without fertilizer or legumes, but do little to sustain the protein needs of animals or humans.

However, by including legumes in the rotation, either as a primary food crop or as a green manure, the nitrogen supply in the soil-plant system can be increased substantially. This could result in increased crop and protein production, and help solve the malnutrition problem in the Tropics.

Nitrogen Release from Organic Matter

Plant-available inorganic nitrogen in most tropical areas shows a marked seasonal fluctuation (Sanchez, 1976), characterized by a slow nitrate (available form to plants) build-up during the dry season. There is a large, but short-lived increase at the beginning of the rainy season and a rapid decrease during the rest of the rainy season due to leaching and plant uptake.

Since the level of plant-available nitrogen in many tropical soils is low, the use of extra nitrogen (green manure, animal waste or compost) will almost always increase yields if crops can make use of the extra nitrogen.

In achieving nitrogen self-sufficiency, we need to consider not just legume nitrogen fixation, but the transfer of nitrogen to other crops from legumes. Henzell and Vallis (1975) reviewed this subject extensively and present the hypothetical flow of nitrogen through the system in Figure 1.

Nitrogen in Legume Plants

The amount of N taken up by leguminous plants varies according to species, effectiveness of the plant-*Rhizobium* symbiosis, environmental conditions, soil fertility, and management. Crops such as guar, cowpea, mung bean, soybean, and groundnut commonly contain 80 to 250 kilograms of N per hectare (Donald *et al.*, 1963; Norman, 1966; Weber, 1966; Firth *et al.*, 1973; Musa and Burhan, 1974), though a range of 30 to 60 kilograms of N per hectare has been reported for pulse crops in India (Mehta, 1970).

The amount of N taken up by tropical pasture legumes is similar to that of crop legumes. Henzell (1968) estimated that the average growth of pasture legumes in tropical and sub-tropical

Australia yields 40 to 210 kilograms of N per hectare each year, while very good growth produces up to 340 kilograms of N per hectare. Measurements in other tropical countries cover a similar range (Jones, 1942; Moore, 1962; Whitney *et al.*, 1967; Keya, 1974). Most of these measurements are for legumes under cutting or lenient grazing. The amounts under heavy grazing may be nearer the lower end of the range.

The proportion of legume N derived from symbiotic fixation varies. It is often about 50 percent in fertile soils (Vincent, 1965), but is likely to be higher in N-deficient soils and lower where substantial amounts of N fertilizer are used (Vincent, 1965; Weber, 1966). In grass-legume mixtures, the proportion will probably be 80 percent to 90 percent or more, because the grass usually takes up most of the available soil N (Walker *et al.*, 1956; Vallis *et al.*, 1967; Henzell, 1968).

Because of the difficulty of harvesting roots and nodules, few data are available on the distribution of N in legumes on a whole-plant basis. Nevertheless, it appears that 70 percent or more of the plant N is translocated to the above-ground portions (Russell, 1961; Whiteman, 1971; Musa and Burhan, 1974).

Where grain or forage is harvested, 60 percent to 90 percent of the legume N may be removed from the land, the percentage being greater when the plant tops are harvested for green forage or hay, and when the whole plant is removed for threshing.

It is more difficult to define the pathways for N in pasture legumes. Pasture will usually be grazed right up to the time the land is plowed for cropping. At any instant, 70 percent to 80 percent of the N will be in the plant tops, but only part of this can be grazed. With maximum efficiency, domestic livestock may remove up to 90 percent of the herbage N that could be harvested by mechanical means (Henzell and Ross, 1973).

Okorie *et al.* (1965) estimated that under intensive rotational grazing, cattle utilized 45 percent to 74 percent of the available fodder in a mixture composed predominantly of *Cynodon plectostachyus* and *Centrosema pubescens*.

With sheep and cattle, the proportion of dietary N removed in meat, milk or wool depends on the productivity of the animal and the quality of its feed. Henzell and Ross (1973) estimated that the following percentages of N were retained in relatively productive pastoral systems: sheep for wool, 5 percent to 13 percent; milk cattle, 13 percent to 28 percent; beef cattle, 4 percent to 10 percent. In practice, the range will be from a negative percentage of ingested N (for animals in negative N balance on poor feed), to about 28 percent. The proportion will usually be less than 10 percent when ruminants of average productivity graze on tropical pasture legumes or on the stubble of tropical legume crops. In absolute terms, 2.4 to 2.6 kilograms of N are removed in 100 kilograms of liveweight gain, and 5 to 6 kilograms of N in 1,000 kilograms of cow's milk.

The other part is the N consumed on the land, but excreted elsewhere. The loss of N must be significant when animals are shut away at night, and may be important even when they move off the land merely for water or to camp. Although no one has adequately quantified this process as far as we are aware, the distribution of excreta on pastures has been measured. Hilder (1966) recorded a considerable concentration of N on sheep camps: About one-third of the total fecal output was found on less than 5 percent of the area of most grazed paddocks. Clearly, the fraction of ingested N removed will depend on the amount of time spent off the land. More fecal N than urinary N may be removed because of the faster rate of passage of urinary N.

Even when grazing animals are confined to cropping land, the N in their excreta is distributed very unevenly. Only about half the surface of highly productive pasture land grazed by cattle is affected by dung or urine in any one year, with a high stocking rate and complete return (Wilkinson and Lowrey, 1973). The proportion of land influenced by excreted N is likely to be much smaller when grazing is for only part of the year or at a lighter stocking rate than the cow-and-calf per acre (2.47 per hectare) assumed by Wilkinson and Lowrey (1973).

The partition of N between feces and urine is related to the percentage of nitrogen in the diet. It is certainly not a constant, as some have implied. The excretion will be predominantly in the feces when animals are consuming feeds of 0.4 percent to 0.6 percent nitrogen with no apparent N digestibility. On the other hand, animals on a diet containing 3.5 percent nitrogen excrete about three-fourths of the N in urine (Henzell and Ross, 1973).

The preceding sections show that the amounts of N returned to the soil in legume residues will vary widely, depending on the yield of the legume and whether it is utilized for grain, forage, grazing or green manure.

Loss of N from residues by fire or erosion will not be considered in detail. If dry residues are burned, more than 90 percent of their N will probably be lost. Loss by erosion will usually be negligible.

Figure 2: **Uptake of N by Rhodes Grass From Un-Ground Legume Residues Mixed With Soil in Pots.**

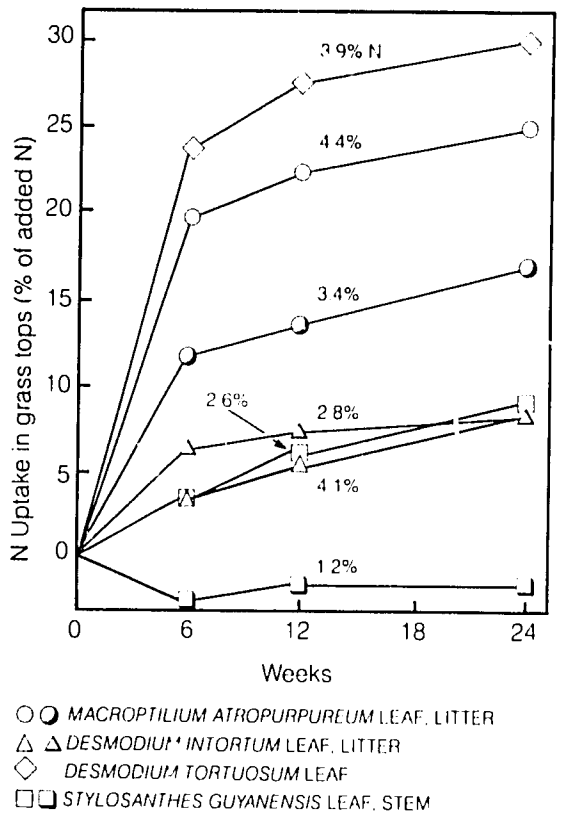

Figure 3: **The Relationship Between N Uptake by Rhodes Grass From Legume Residues Mixed With Soil and the N Concentration cf the Residues.**

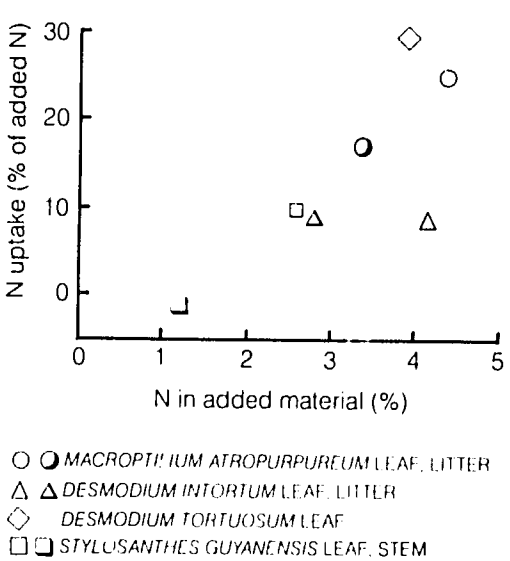

The main interest is in the proportions of residue N that are mineralized or incorporated into soil organic matter. The mineralization of N in plant residues has been studied extensively (Bartholomew, 1965). Only the main quantitative aspects will be discussed here. The proportion of N released during decomposition of the residues is governed by the chemical composition of the residues—especially the N content, the manner in which residues are returned to the soil, and environmental conditions.

A predictable consequence of the variable N concentration in different legume residues is that they will contribute varying amounts of N to the crops that follow. This is demonstrated in Figure 2 (Henzell and Vallis, unpublished data). Most of the difference between residues can be attributed to their N percentages (Figure 3). Materials containing less than about 1.5 percent N do not mineralize any of this in the short term. The exceptionally low availability of N in *Desmodium intortum* leaves is thought to be caused by a reaction between proteins and tannin-like polyphenols that accumulate in this species (Vallis and Jones, 1973).

A notable feature of N mineralization in plant residues is that, after a few weeks, the rate of mineralization is quite slow, regardless of the initial composition of the residues (Figure 2). Apparently, it is not the plant proteins that are resistant to decay, but the microbially produced organic N, which becomes stabilized by reactions with aromatic polyphenols of microbial or plant origin (Bartholomew, 1965), or with montmorillonite (Sorensen, 1972; 1975). This has important implications in practice. Nitrogen in crop residues that is not mineralized during the first season becomes available only very slowly to subsequent crops, usually at less than 5 percent per year, and certainly at less than 10 percent per year. Although a single addition of crop residues will have a negligible effect on the N supply after the first crop, the effect of repeated additions over many years may be measurable in two or three successive crops (Bartholomew, 1965).

Placement of residues on the soil surface rather than burying or mixing them in the soil results generally in slower decomposition and slower mineralization or immobilization of N (Parker *et al.*, 1957; Parker, 1962; Moore, 1974). Environmental conditions have little effect on the final degree of mineralization or immobilization of N during aerobic decomposition of residues; only the rates of these processes are substantially affected (Bartholomew, 1965). However, the delay caused when material dries on the soil surface should always be noted.

It has already been stressed that the N in decaying legume residues, after the initial flush of mineralization, is made available quite slowly. Nitrogen in ruminant feces is considered to belong immediately to the N in soil organic matter. Fecal N is primarily bacterial material; the remainder is undigested plant N or N of animal origin. Nitrogen in feces is mineralized more slowly than N in plant material with a similar N concentration (Barrow, 1961).

At most, 60 percent (Bartholomew, 1965) of the N in legume residues is likely to be mineralized in time for a following crop. The remainder finishes up in soil organic matter. After the first year, its availability is generally less than 10 percent per year.

Soil Fertility in Semi-Arid Areas

Nitrogen deficiency is widespread in semi-arid areas, and soil management to provide adequate nitrogen for high yields is of nearly universal concern. Since soils are often deficient, nitrogen must be added to the system to sustain productivity. Manure and composts are one way to accomplish this, but legumes should also be considered if they fit well into the economic and social pattern of the region's agriculture and if there is sufficient high-nitrogen residue after harvest.

In areas where water is scarce, green-manure crops must be carefully managed or they will deplete soil moisture to a very low level, resulting in reduced yield for the main crop. The nitrogen-water relationships must be taken into account in any cropping system which would use a green-manure to provide the nitrogen.

If water deficits limit early growth, or are distributed throughout the season, canopy development and transpiration may be unaffected by nitrogen level, and yield reduction from nitrogen is improbable. Also, if inter-row soil surfaces are wetted by frequent rains during canopy development, evapotranspiration is less affected by the additional cover caused by high nitrogen.

Since the best nitrogen levels must be determined based on probability of rainfall, the wider optimum range is of considerable value.

In the short term, crop residue management—and therefore tillage—can have a major impact on nitrogen availability. Decomposition of highly carbonaceous residues competes with the crop for mineralized nitrogen in the soil. If the residue is incorporated into the soil well ahead of planting, decomposition will be largely completed, and the nitrogen will be released and become available to the crop.

But if residues remain on the surface up to planting time, and are not in full contact with the soil, decomposition continues after planting. Whether the resulting cutback in available nitrogen is great enough to reduce yields depends on the amount of residue remaining, its relative content of carbon and nitrogen, and the weather conditions following planting.

Since the effects of residue depend on the rate and timing of decomposition, variable results can be expected where conditions differ. For example, higher soil temperatures in warmer regions may accelerate decomposition before planting, leaving the nitrogen supply to the crop unaffected. If appreciable residues are present at planting, higher soil temperatures could speed decomposition and enhance the competition with the crop for nitrogen.

Despite the complexity, the impact of proposed residue management practices on the nitrogen supply to the crop always should be considered. And if a nitrogen source is applied, the timing should be compatible with both residue maintenance and the nitrogen requirements of the crop.

Nitrogen Fixation in Legumes in East Africa

Keya (1977) reviewed the role of legumes in East African agriculture. Cropping systems involving monoculture of non-nodulated plants resulted in a decline in yields and depletion of certain soil nutrients. This decrease in productivity was alleviated in the past by shifting cultivation, and more recently by the use of inorganic fertilizers. Since the population in East Africa has been increasing by approximately 3 percent per year during the last decade, the resulting pressure on the land has made shifting cultivation untenable. The price of synthetic fertilizer has risen considerably during the last 15 years.

In this context, research now is being aimed at finding out to what extent biologically fixed nitrogen can be supplied to crops. Jones (1942) assessed the role of a leguminous cover crop such as *Glycine wightii* in building up total soil N in Kenya. The experiments ran for nine years and compared soil from a legume-planted plot with soil from an adjoining cultivated plot. At the end of the study, the legume had increased the N content of the Kikuyu friable loam soil by 180 kilograms per hectare per year. Total soil N was increased from 0.206 percent to 0.292 percent, a gain of about 40 percent. This is equivalent to an accumulation of about 1,681 kilograms of N per hectare within nine years, more than half occurring in the first four years. However, these values

were based entirely on an ungrazed legume cover crop. In practice, the crop is normally harvested or grazed as a source of livestock feed.

At Molo, Kenya, Morrison (1966) found that Lousiana white clover (*Trifolium repens*) with cocksfoot increased the pasture yield in the second year as much as an application of 244 kilograms of N per hectare as calcium ammonium nitrate (20.5 percent N). In Kitale, Kenya, the inclusion of *Desmodium uncinatum* with Nandi Setaria increased the yield by an amount equivalent to the application of 163 kilograms of N per hectare as ammonium sulphate nitrate (26 percent N) (Suttle, 1968).

Souza (1968), based at Kitale but working in different ecological zones of Kenya, showed that lucerne, a legume which did not nodulate naturally, fixed the equivalent of about 56 kilograms of N in 120 days when inoculated. In field trials, he also showed that profusely nodulated *Phaseolus vulgaris* bean fixed adequate nitrogen to meet its nutritional requirements. Keya (1977) estimates that inoculated and nodulated beans grown at the University of Nairobi fixed 55 kilograms of N per hectare in 120 days, using non-nodulated beans to calculate nitrogen uptake from the soil.

On hillsand soils at Ukiriguru, in western Tanzania, five forage legume-grass mixtures were compared with four levels of fertilizer nitrogen applied to *Cenchrus ciliaris* pasture (Walker, 1968). *Macroptilium atropurpureus* and *Stylosanthes guyanensis* in the grass-legume mixture increased herbage yield much more than an addition of 106 kilograms of N per hectare as nitrochalk to pure grass.

On coastal, sandy soils of mainland Tanzania, Anderson (1968) reported that overseeding of the palatable legumes with grass improved the protein production of the indigenous sward. Adding lucerne to pastures increased the nitrogen status of a volcanic soil at Njoro, Kenya, without the use of nitrogenous fertilizers (Thomas, 1972). Thairu (1972) and Keya *et al.* (1971) showed that increases in quantity and quality of herbage resulting from oversowing the *Desmodium* spp. were substantial.

Mixed cropping is little used at present in intensive agriculture, but despite the promotion of sole cropping by Extension agents, the majority of East African farmers still practice it. Tree crops, cereals or root crops are interplanted with short-term legumes such as beans, groundnuts, cowpeas, peas, etc.

There is little experimental evidence of the benefits of legumes in mixed cropping. However, Osiru and Willey (1972) and Willey and Osiru (1972) indicated that, in Uganda, there is a possible yield benefit by mixing maize and beans or sorghum and beans under intensive farming. Yields of maize-beans and sorghum-beans mixtures were up to 38 percent and 55 percent more, respectively, than the combined yield of each component of the mixture when grown separately. It was concluded from the Uganda experiments that yield increases occurred because the mixtures better utilized the environmental resources, such as light, and the dissimilar rooting depths of the different crops exploited the soil more, with aboveground competition being reduced by the heterogenous growth cycles. However, some benefit from nodulation and nitrogen fixation cannot be ruled out.

Preliminary work in Kenya has shown that pure stands of maize and beans yield 3,500 kilograms per hectare and 1,000 kilograms per hectare, respectively, while the mixture produced 3,200 kilograms of maize and 600 kilograms of beans. Intercropping is, therefore, an area of research which needs urgent attention, because, as the holdings get smaller and farming becomes more intensive, mixed cropping probably has the greatest potential to supply a family farm with a steady cash flow and food supply throughout the year. Since legumes already fit very well into mixed cropping systems, nodulation and nitrogen fixation in an altered ecosystem of mixed crops merits more attention.

Inoculation of Legume Seeds

That nodulation of both exotic and indigenous legumes is erratic when sown without inoculation was observed as early as the 1930s by McDonald (1935), and has been reiterated by Morrison (1966) and others (see Keya and van Eijnatten, 1975). Extensive nodulation studies in Kenya showed that none of the introduced legumes were able to nodulate effectively without inoculation (Souza, 1968).

In northern Tanzanian soils which had previously been planted to *Phaseolus vulgaris* beans, no increase in yield was obtained by inoculating seed with *Rhizobium* (McCartney and Watson, 1966). However, inoculation is worthwhile on land where beans have not been grown or where soil pH is low (McCartney and Watson, 1966; Keya, 1977).

A series of experiments carried out between 1961 and 1965 by Weiss (1967), on Turbo and Soya estates in Kenya, showed that the use of an inoculant is essential on soil where soybeans have not been grown previously. Inoculation is essential for subterranean clover in order to achieve

nitrogen fixation (Morrison, 1963). It was further emphasized by Morrison (1964) that subterranean clover, Louisiana white clover and Kenya white clover all required different strains of rhizobia for nodulation, and that the wild strains were not fully effective. Bumpus (1957) working at Kitale, Kenya, demonstrated that, in *Trifolium semipilosum*, *T. labidis* and *Medicago sativa*, better results were obtained by using a good inoculant than by relying on the presence of *Rhizobium* in the soil. Bumpus (1957) stated that it has been well-established that there is no suitable *Rhizobium* in the soil for *M. sativa*, especially as the genus *Medicago* is not represented in the local flora.

With *Alysicarpus glumaceus*, Bumpus (1957) found that the uninoculated plot yield surpassed all the inoculated treatments, and concluded that none of the commercial strains of bacteria in the "cowpea group" were as effective as those already in the soil. Nodulated plants were heavier than unnodulated ones, a difference attributed to nitrogen fixation in nodules.

Response to inoculation was further confirmed by Thomas (1972), who showed that inoculated and lime-pelleted seeds of lucerne were established quickly on volcanic ash soils at Njoro, Kenya, resulting in substantial amounts of nitrogen accumulating in the soil. This soil was about neutral in its reaction, but one of the factors limiting nodulation of lucerne in most tropical soils is low pH. Whether lime-pelleting might promote profuse nodulation in acid tropical soils has not yet been answered fully. Experiments at Kitale, conducted by Keya and van Eijnatten (1975), attempted to ascertain the role of seed pelleting and inoculation of *Desmodium uncinatum* under greenhouse and field conditions. In pot experiments, inoculated seedlings were vigorous, possibly because they were nodulated earlier and had more numerous and heavier nodules. However, there were no responses to inoculation and pelleting under field conditions. Keya and van Eijnatten concluded that, since *D. uncinatum* naturally forms effective nodules over a wide range of sites in western Kenya, inoculation and pelleting may be omitted without adverse effects for this legume. Similar field results were found for certain indigenous genera, such as *Crotalaria* and *Dolichos* spp. (Souza, 1968).

Nodule bacteria vary greatly in their ability to fix atmospheric nitrogen. Some are efficient and of great value to the plant, but the majority are only moderately effective in nitrogen fixation. It is, therefore, necessary to correct the impression that, because nodules are present on the roots, the bacteria in them must be of use to the plant. The legume-inoculum relationship has been established for temperate legumes and highly efficient nitrogen-fixing strains of rhizobia have been isolated for agricultural use. However, little is known of the tropical strains, most of which fall under the cowpea group. Field experience in East Africa casts doubt on the value of most imported inoculants used.

The implication of such findings is that, for new collections of indigenous or imported species grown under altered environments, the need to supply inoculants requires careful and urgent investigation.

The nitrogen fixation rate in a four-year-old stand of the woody legume *Leucaena leucocephala* (Lam.) de Wit. was estimated by Hogberg and Kvarnstrom (1982) in the field at a rather dry site in Tanzania, using an acetylene reduction technique. The amount of nitrogen fixed annually was about 110 ± 30 kilograms per hectare. The results give strong support for the use of *L. leucocephala* for soil enrichment in less humid areas of tropical Africa.

The Role of Trees

Use of agronomic and horticultural legumes would help provide nitrogen in semi-arid environments of the Tropics. As a strategy to provide nutrients and stability, the use of trees needs to be emphasized. This was recognized by East African farmers who still use mixed stands of tree crops, cereals, root crops and legumes, even though encouraged by Extension agents to plant single crops. Keya (1974) and Kock (1982) suggest that trees may be the key to successful farming systems in the Tropics.

Land use systems relying on diversity to make maximum use of an area's productive potential have to "simulate" climax vegetations to obtain maximum biological productivity. This applies especially to rainforests and savannas, which, except for pure grass savannas, naturally contain trees and bushes, whose density, composition and height depend largely on rainfall.

The contribution of natural climax vegetations to humus levels under African conditions has been summarized by Sanchez (1976), using data of Greenland. Rainforests produce up to six times as much organic matter as savannas, but their decomposition rates are only 1.5 times higher. Consequently, rainforest soils generally contain twice as much organic matter as savannas. Again, the net organic matter production of these depends largely on rainfall.

Although the advantages of tree integration are known by traditional farmers, and research

has produced sufficient evidence of their effectiveness, "Agricultural engineers . . . have not taken a serious look at what can be done" (Sanchez, 1976). Except for commercial plantations, tree integration has fallen between the stools of the agriculturist, the forester and the pasturalist, each occupied with his own discipline, and each missing decisive advantages available from tree integration. Only input scarcity seems to make us aware of the superior performance of trees, whether in erosion control, in biomass and fodder production, improvement of soil property, or yield performance and energy supply. Trees can be looked at as a self-contained factory that creates the conditions of its high productivity, whether by soil property or ecoclimatic improvement.

The important aspect here is the choice of a noncompetitive species for the various purposes. A growing stock of documentation on suitable species exists, supplying information on suitable species for semi-arid, humid and even hydromorphic areas (IRCT, 1979; Nair, 1979; Nat. Acad. Sci., 1977; 1979).

From semi-arid to humid areas, tree integration is a characteristic of traditional, small-farmer systems serving almost all purposes. Lagemann and Heuveldop (1982) show that farmers in the humid areas of eastern Nigeria respond to higher population pressure with increasing tree densities of varying heights and species, increasingly using leaves and branches for fodder and mulch. Net income obtained from these farms exceeded that of intensive maize cropping. The same tendencies emerge from literature on traditional farming on all three continents (Anonymous, 1981; Sanchez, 1976). What may often appear to development workers as a "botanical happening over time," instead is a subtle adjustment by farmers to changing conditions, making optimum use of their own resources. With tree integration, the role of mulch on relatively undisturbed soils increases. This factor indicates possible solutions for small farmers who cannot afford to plant separate green-manure crops, but are able to use the superior biomass production performance of trees to maintain the organic matter balance in their soils.

Research has just begun to provide quantitative evidence of ecoclimatic improvement through multi-storey farming systems. An example is given by Nair (1979) in India. Multiple cropping of cocoa and coconut reduced evaporation (compared with a bare soil) by 70 percent, reduced variations in above-ground air temperatures 20 times, and helped more than double populations of bacteria and fungi in the soil.

Proof of similar soil, ecoclimate and yield improvements with tree integration in semi-arid areas, although on a lower level of productivity, is provided by French research in Senegal on *Acacia albida* in a millet-groundnut rotation. These improvements led to sustainable yield increases in millet of 100 percent, and/or in groundnuts by 25 percent. In semi-arid areas, nitrogen is more often the limiting factor than water. The conventional views that moisture is the most limiting factor in dry regions, and that shade is always detrimental to understorey crops, is overturned in situations where soil fertility is low and adequate amounts of mineral fertilizer cannot be added. But these are precisely the conditions which characterize small-holder production in most developing countries. Further evidence of beneficial effects can be found in Borgnettau-Verainden (1980), IRCT (1979), Nat. Acad. Sci. (1977) and Sanchez (1976).

Although the superior performance of trees is obvious to any observer going through a barren landscape in the dry season, development projects often are not geared to using trees as living fences, as bunds for erosion control, or as planned crop mixtures. The same situation applies in the case of local researchers, who generally lack the capability to provide seed collections of suitable species and site-specific agronomic recommendations. Again, monodisciplinary training and organization is often to blame for this circumstance. Tree integration should be considered a necessary complement to livestock integration in small-holder systems to provide fodder as well as fertility. The classical distribution between forests, arable lands, and pasture areas should be a thing of the past. Tree integration would convert densely populated, barren landscapes, vulnerable to all forms of degradation, into "healthy," park landscapes with a light tree and bush cover.

Conclusions and Recommendations

Biologically produced nitrogen is becoming increasingly important as synthetic nitrogen escalates in price.

In many areas, nitrogen is readily available on the farm in manure and plant materials. If managed properly, these materials could provide sufficient nitrogen without the expense of chemical nitrogen. Traditional farming methods in many areas of the Tropics have reduced the soil organic matter content to low levels, resulting in a nitrogen supply which does not support high yields.

Legumes offer a biological approach to increase substantially the nitrogen available to tropical soils, and thereby lift the yield ceiling now restricting crop production. The nitrogen-water-

yield relationships will dictate the nitrogen management strategy. For instance, in water-poor areas, green-manure crops can reduce yields by depleting available water. In these areas, mixed cropping and the use of legume trees offer a superior production system which uses resources efficiently and raises the yield plateau. It is important that legume trees be integrated into such a system, since they are locally available and provide stability to tropical production.

The amount of biological nitrogen provided by manures, plant materials and legumes could far exceed that which is presently bought as chemical nitrogen, and result in substantial yield increases at lower cost while improving the soil's water-holding capacity. If the introduction of regenerative, resource-efficient technologies becomes a national priority in Tanzania, and resources and outreach are provided, nitrogen self-sufficiency can become a reality.

REFERENCES

Anderson, G. D. 1968. Effects of fertilizers on botanical composition and productivity of pasture on the sandy soils of the Tanganyika coast. E. Afr. Agric. For. J. 34:207-216.

Anonymous. 1981. Oakologischer landbau als standortgemasse bewirtschaftungsform in Rwanda. Unpublished draft. Heidelberg.

Barrow, N. J. 1961. Mineralization of nitrogen and sulphur from sheep feces. Austr. J. Agric. Res. 12:644-650.

Bartholomew, W. V. 1965. Mineralization and immobilization of nitrogen in the decomposition of plant and animal residues. p. 285–306. *In* Bartholomew, W. V. and F. E. Clark (ed.). Soil nitrogen. Monograph Series #10. Am. Soc. of Agron., Madison, Wis.

———. 1972. Soil nitrogen and organic matter. p. 63–81. *In* Soils of the humid Tropics. Nat. Acad. of Sci., Washington, D.C.

Bartholomew, W. V. and D. Kirkham. 1960. Mathematical descriptions and interpretations of culture-induced soil nitrogen changes. 2:471–477. Trans. 7th Int. Cong. Soil Sci., Madison, Wis.

Bin, J. 1983. Utilization of green manure for raising soil fertility in China. Soil Sci. 135:65-69.

Borgn.tau-Verainden, E. 1980. Study on impact of windbreaks in Majiia Valley, Niger. Wageningen.

Bumpus, E. D. 1957. Legume nodulation in Kenya. E. Afr. Agric. For. J. 23:91-99.

Donald, L., H. J. Stangel and J. T. Pesek. 1963. Advances in knowledge of nitrogen fertilization in the U.S.A. since 1950. p. 75–129. *In* McVickar, M. H., G. L. Bridger and L. B. Nelson (ed.). Fertilizer technology and usage. Soil Sci. Soc. of Am., Madison, Wis.

Firth, P., H. Thitipoca, S. Suthipradit, R. Wetselaar and D. E. Beech. 1973. Nitrogen balance studies in the central plain of Thailand. Soil Biol. Biochem. 5:41–46.

Henzell, E. F. 1968. Sources of nitrogen for Queensland pastures. Trop. Grasslds. 2:1-17.

Henzell, E. F., A. E. Martin, P. J. Ross and K. P. Haydock. 1968. Isotopic studies on the uptake of nitrogen by pasture plants. IV. Uptake of nitrogen from labeled plant material by Rhodes grass and Siratro. Austr. J. Agric. Res. 19:65-77.

Henzell, E. F. and P. J. Ross. 1973. The nitrogen cycle of pasture ecosystems. 2:227-245. *In* Butler, G. W. and R. W. Bailey (ed.). Chemistry and biochemistry of herbage. Academic Press, N.Y.

Henzell, E. F. and I. Vallis. 1975. Transfer of nitrogen between legumes and other crops. p. 73–88. *In* Ayanaba, A. and P. J. Dart (ed.). Biological nitrogen fixation in farming systems of the Tropics. John Wiley & Sons Inc., N.Y.

———. Unpublished data.

Hilder, E. J. 1966. Distribution of excreta by sheep at pasture. p. 977–981. *In* Proc. 10th Int. Grassld. Cong. Helsinki. Finland.

Hogberg, P. and M. Kvarnstrom. 1982. Nitrogen fixation by the woody legume *Leucaena leucocephala* in Tanzania. Plant and Soil. 66:21-28.

IRCT. 1979. Resume de rapport annuel, 1978–1979.

Jones, G. H. 1942. The effect of a leguminous cover crop in building up soil fertility. E. Afr. Agric. For. J. 8:48-52.

Keya, N. C. O. 1974. Grass/legume pastures in western Kenya. Legume performance at Kitale, Kisii and Kakamega. E. Afr. Agric. For. J. 39:247-257.

———. 1977. Nodulation and nitrogen fixation in legumes in East Africa. *In* Ayanaba, A. and P. J. Dart (ed.). Biological nitrogen fixation in farming systems of the Tropics. John Wiley & Sons Inc., N.Y.

Keya, N. C. O., F. J. Olsen and R. Holliday. 1971. Oversowing improved pasture legumes in natural grassland of medium altitudes of Western Kenya. E. Afr. Agric. For. J. 37:148–155

Keya, N. C. O. and C. L. M. van Eijnatten. 1975. Studies on oversowing of natural grassland in Kenya. Effects of seed inoculation and pelleting on the nodulation and productivity of *Desmodium uncinatum* (JACQ) DC. E. Afr. Agric. For. J. 40:351-358.

Kock, W. 1982. Principles and technologies of sustainable agriculture in tropical areas: a preliminary assessment. Draft copy. The World Bank, Washington, D.C.

Lagemann, J. and I. Heuveldop. 1982. Characterization and evaluation of agroforestry systems. The Case of Aosta Purisal. Costa Rica.

McCalla, T. M. and T. J. Army. 1961. Stubble mulch farming. Adv. Agron. 13:125-196.

McCartney, J. C. and D. W. Watson. 1966. Beans. p. 1–28. Tengeru report #89. Ministry of Agriculture, Forests and Wildlife Bull. #20.

McDonald, J. 1935. The inoculation of leguminous crops. E. Afr. Agric. For. J. 1:8-13.

Mehta, T. R. 1970. General. p. 1–13. *In* Kachroo, P. and M. Arif (ed.). Pulse crops of India. Ind. Coun. of Agric. Res., New Delhi.

Moore, A. W. 1962. The influence of a legume on soil fertility under a grazed tropical pasture. Emp. J. Expt. Agric. 30:239-248.

———. 1974. Availability to Rhodes grass *(Chloris gayana)* of nitrogen in tops and roots added to soil. Soil Biol. Biochem. 6:249-255.

Morrison, J. 1963. Subterranean clover: a pasture legume for higher altitudes. Kenya Farmer. 81:24-25.

———. 1964. Clover inoculation. Observations of clover inoculation and seed pelleting at high altitudes. Kenya Farmer. 93:16-17.

———. 1966. Productivity of grass and grass/legume swards in the Kenya Highlands. E. Afr. Agric. For. J. 32:19-24.

Musa, M. M. and H. O. Burhan. 1974. The relative performance of forage legumes as rotational crops in the Gezira. Exp. Agric. 10:131-140.

Nair, P. 1979. Intensive multiple cropping with coconuts in India: principles programs and prospects. Verlag Paul Parey, Berlin.

National Academy of Sciences. 1977. *Leucaena:* promising forage and tree crop for the Tropics. Washington, D. C. 115 p.

——— 1979. Plant studies in the People's Republic of China. Washington, D.C.

Norman, M. J. T. 1966. Katherine Research Station 1956–64: a review of published work. Tech. Paper #28. CSIRO, Austr. Division of Land Research and Regional Survey.

Okorie, I. I., D. H. Hill and R. J. McIlory. 1965. The productivity and nutritive value of tropical grass/legume pastures rotationally grazed by N'Dama cattle at Ibadan, Nigeria. J. Agric. Sci. Camb. 64:235-245.

Osiru, D. S. O. and R. W. Willey. 1972. Studies on mixtures of dwarf sorghum and beans *(Phaseolus vulgaris)* with particular reference to plant population. J. Agric. Sci. Camb. 79:531-540.

Parker, D. T. 1962. Decomposition in the field of buried and surface-applied cornstalk residue. Proc. Soil. Sci. Soc. of Am. 26:559-562.

Parker, D. T., W. E. Larson and W. V. Bartholomew. 1957. Studies on nitrogen tie-up as influenced by location of plant residues in soils. Proc. Soil Sci. Soc. of Am. 21:608-612.

Russell, E. W. 1961. Soil conditions and plant growth. Longmans, London. 849 p.

Sanchez, P. A. 1976. Properties and management of soils in the Tropics. John Wiley & Sons Inc., N. Y.

Sorensen, L. H. 1972. Stabilization of newly formed amino acid metabolites in soil by clay minerals. Soil Sci. 114:5-11.

———. 1975. The influence of clay on the rate of decay of amino acid metabolite synthesized in soils during decomposition of cellulose. Soil Biol. Biochem. 7:171-177.

Souza, D. I. A. de. 1968. Legume nodulation and nitrogen fixation studies in Kenya. E. Afr. Agric. For. J. 34:299-305.

Suttle, J. M. 1968. Pasture legume research in Kenya. E. Afr. Agric. For. J. 33:281-285.

Thairu, D. M. 1972. The contribution of *Desmodium uncinatum* to the yield of *Setaria sphacelata*. E. Afr. Agric. For. J. 37:215-219.

Thomas, D. B. 1972. Observations on lucerne as a pasture legume on volcanic ash soil at Njoro, Kenya. E. Afr. Agric. For. J. 37:336-340.

Vallis, I., K. P. Haydock, P. J. Ross and E. F. Henzell. 1967. Isotopic studies on the uptake of nitrogen by pasture plants. III. The uptake of small addition of N-labeled fertilizer by Rhodes grass and Townsville lucerne. Austr. J. Agric. Res. 18:865-877.

Vallis, I. and R. J. Jones. 1973. Net mineralization of nitrogen in leaves and leaf litter of *Desmodium intortum* and *Phaseolus atropurpureus* mixed with soil. Soil Biol. Biochem. 5:391-398.

Vincent, J. M. 1965. Environmental factors in the fixation of nitrogen by the legume. p. 384–435. *In* Bartholomew, W. V. and F. E. Clark (ed.). Soil nitrogen. Am. Soc. of Agron., Madison, Wis.

Voss, R. D. and W. D. Shrader. 1979. Crop rotations: effect on yields and response to nitrogen. Iowa State Univ., Ames, Iowa.

Walker, B. 1968. Herbage plants for pasture improvement in western Tanzania. E. Afr. Agric. For. J. 35:1-5.

Walker, T. W., A. F. R. Adams and H. D. Orchiston. 1956. Fate of labeled nitrate and ammonium nitrogen when applied to grass and clover grown separately and together. Soil Sci. 81:339-351.

Weber, C. R. 1966. Nodulating and non-nodulating soybean isolines. II. Response to applied nitrogen and modified soil conditions. Agron. J. 58:46-49.

Weiss, E. 1967. Soyabean trials on the Uasin Gishu (western Kenya). E. Afr. Agric. For. J. 32:223-228.

Whiteman, P. C. 1971. Distribution and weight of nodules in tropical pasture legumes in the field. Exp. Agric. 7:75-85.

Whitney, A. S., Y. Kanehiro and G. D. Sherman. 1967. Nitrogen relationships of three tropical forage legumes in pure stands and in grass mixtures. Agron. J. 59:47-50.

Wilkinson, S. R. and R. W. Lowrey. 1973. Cycling of mineral nutrients in pasture ecosystems. 2:248-309. *In* Butler, G. W. and R. W. Bailey (ed.). Chemistry and biochemistry of herbage. Academic Press, London.

Willey, R. W. and D. S. O. Osiru. 1972. Studies on mixtures of maize and beans *(Phaseolus vulgaris)* with particular reference to plant population. J. Agric. Sci. Camb. 79:517-529.

Editor's Note: Discussion on this paper follows the paper titled "Contribution of Biological Nitrogen Fixation to the Nitrogen Supply of Soils."

CONTRIBUTION OF BIOLOGICAL NITROGEN FIXATION TO THE NITROGEN SUPPLY OF SOILS

M. S. Chowdhury and B. J. Ndunguru, Dept. of Soil Science, University of Dar es Salaam
L. L. Lulandalla, Division of Forestry, University of Dar es Salaam

The original source of nitrogen for all biological cells is N_2 from the atmosphere. Plants can use inorganic forms of nitrogen as NH_4^+ or NO_3, the supply and formation of which are regulated by microbiota of the ecosystem. While forest ecosystems are reasonably self-sufficient in nitrogen and other nutrients due to continual nutrient recycling, agricultural soils are mostly depleted in nitrogen, with the possible exception of grasslands. The major share of N depletion is contributed by crop removal.

Population growth demands increased food production, implying more nutrient removal and, thus, lower soil productivity. Advances in industrial technology, such as chemical fixation of nitrogen as ammonia, may help replenish the N depletion.

Hardy and Holsten (1973) estimated that 36.5 million tons of N fertilizers were used in 1973 on a global basis; this amount represented only one-fifth of the nitrogen fixed biologically.

Soil nitrogen is replenished by addition of crop residues and through biological nitrogen fixation. In a developing soil where the environment is principally inorganic, biological nitrogen fixation is the major agent in the formation of soil nitrogen.

The demand for nitrogen to maintain soil productivity is increasing every day. Global consumption of fertilizer N in 1973 has been esti-

Table 1: **Fertilizer Nitrogen Consumption (tons) in Tanzania (1973–1982).**

Year	SA*	ASN*	CAN*	Urea	NPK Tobacco	NPK 20:10:10	NPK 25:5:5	Other NPK	DAP*	Total
1973	5,090.6	676.0	840.0	506.0	56.1	200.0	1,125.0	377.4	899.0	9,770.1
1974	8,409.2	364.0	—	690.0	37.2	1,540.0	1,187.5	703.8	102.9	13,034.6
1975	9,797.3	260.0	1,470.0	1,656.0	84.0	530.0	437.5	819.6	—	15,054.4
1976	6,947.9	—	2,397.3	1,426.0	—	700.0	1,250.0	379.1	1,375.1	14,458.0
1977	6,426.8	—	1,890.0	2,300.0	769.8	300.0	750.0	450.0	—	12,886.6
1978	9,373.1	—	1,676.6	644.0	1,216.0	670.0	1,325.0	—	—	14,904.7
1979	5,996.1	—	3,235.1	2,305.1	493.9	445.0	1,700.8	—	—	14,176.0
1980	10,773.2	—	5,460.0	2,396.1	836.6	—	1,282.0	—	2,585.7	23,333.6
1981	11,467.3	—	2,520.0	1,322.5	914.1	1,026.0	2,310.0	—	—	19,559.9
1982	8,436.1	—	5,250.0	2,695.1	522.0	398.4	1,547.0	—	—	18,848.6

*SA = Sulphate of ammonia, ASN = Ammonium sulphate nitrate, CAN = Calcium ammonium nitrate, DAP = Diammonium phosphate.
Source: Marketing Division, Tanzania Fertilizer Company, Dar es Salaam

mated at 40 million metric tons (Hardy and Holsten, 1973); demand by the end of this century is expected to be 200 million metric tons (Hardy and Havelka, 1975). The trend of fertilizer nitrogen use in Tanzania is presented in Table 1.

The chemical fixation of nitrogen for fertilizer manufacture is an energy-consuming process, with fossil fuels being the major source of raw materials. When fossil fuels were cheap, nitrogen fertilizers were also cheap. For example, one metric ton of fertilizer that cost $30 in 1972 had jumped to $140 by 1974.

The price hike of fossil fuels has adversely affected the overall economy of developing countries, particularly those lacking fossil fuel resources. For them, the total buying capacity of the energy and raw materials for nitrogen fertilizers has been considerably reduced, and as a result, the supply has become uncertain. The only fertilizer factory in Tanzania was in operation for only two and a half months in 1982, although the consumption of fertilizer in the same year was not markedly reduced. Table 2 shows that most of the nitrogen fertilizers were imported as the production in the factory went down.

One alternative to this problem is to supply agricultural lands with nitrogen materials manufactured with the least amount of fossil fuels. Since biological nitrogen fixation remains a major agent of nitrogen supply in nature, and the process is not dependent on fossil fuels, harnessing this process has become increasingly important.

Biological Nitrogen Fixation

Classically, there are two kinds of biological nitrogen fixation: nonsymbiotic (asymbiotic) or free-living nitrogen fixation, carried out by certain bacteria, including cyanobacteria (blue-green algae), without association of a host; and symbiotic nitrogen fixation, carried out by an intimate association between a host (mainly a plant) and a microbe (bacteria, actinomycetes or cyanobacteria).

The ability to biologically fix nitrogen, defined as converting elemental dinitrogen (N_2) into cell-utilizable, combined form, is restricted to only a few prokaryotes, like bacteria and cyanobacteria.

Free-living nitrogen fixation has been detected in at least 20 genera of bacteria, with great differences in their relations to oxygen, energy source, electron acceptor and other properties (Knowles, 1978). However, only in certain genera did all the known species show nitrogen fixation property. Among the cyanobacteria, more than 80 species have been recorded to have nitrogen-fixing ability in natural habitats. These species belong to the orders Nostocales and Stigonematales (Stewart, 1974). All of them are filamentous except *Gloeocapsa*. Classical examples of free-living nitrogen-fixing bacteria are *Azotobacter*, *Beijerinckia* and *Clostridium*.

Although doubt has been expressed regarding the contribution of free-living nitrogen fixa-

Table 2: **Local Production by Tanzania Fertilizer Company (TFC) and Imports of Important Nitrogen Carrier (tons) in Tanzania (1978 to 1982).**

Year	Production/ Import	SA*	CAN*	Urea	NPK 20:10:10	NPK 25:5:5
1978	TFC	16,334	—	—	—	—
	Import	28,300	7,984	1,400	3,350	5,300
1979	TFC	24,553	—	—	2,225	6,803
	Import	4,000	15,405	5,011	—	—
1980	TFC	19,469	—	—	—	5,128
	Import	31,832	26,000	5,209	—	—
1981	TFC	24,922	—	—	5,130	9,240
	Import	29,684	12,000	2,875	—	—
1982	TFC	6,839	—	—	1,992	1,888
	Import	33,333	25,000	5,859	—	4,300

*SA = Sulphate of ammonia, CAN = Calcium ammonium nitrate

Source: Marketing Division, Tanzania Fertilizer Company, Dar es Salaam

tion in soil (Jensen, 1950), environmental and ecological conditions in the humid Tropics favor the fixation of from 20 to 50 kilograms per hectare each year by free-living bacteria (Odu, 1977).

Free-living bacteria were used as nitrogen sources for crops in Russia and Eastern Europe under the commercial name "Azotobacterin." Experience showed that the beneficial affect of Azotobacterin could be due to plant growth factors produced by Azotobacter, rather than to the nitrogen fixation (Mishutin and Shilnikova, 1971; Alexander, 1977b). Recent experiments on inoculations of soil with *Azotobacter* with different doses of inorganic nitrogen fertilizers in India have demonstrated the possibility of saving considerable nitrogen fertilizer while still attaining desired yields of rice (Subba Rao, 1977). Often, preparations of *Clostridium* have been used, but with doubtful results. Thus, commercial exploitation of free-living, nitrogen-fixing bacteria has not been very successful.

The most promising exploitation of free-living nitrogen fixation could probably be achieved by "algalization" (Venkataraman, 1961), whereby cyanobacteria are applied to the rice fields. The beneficial effect of cyanobacteria on the grain yield of rice has been reported from China, Egypt, India, Japan, the Philippines and the USSR.

However, there are also indications of failures of algalization. Venkataraman (1972) and Roger and Koolasooriya (1980) reviewed the subject and concluded that, "Increasing the efficiency of indigenous or inoculated nitrogen-fixing BGA by cultural practices is certainly an efficient way of providing an alternative source of nitrogen for rice cultivation."

Effective algalization has been reported to increase the size of rice plants, their nitrogen content, number of tillers, ears, spikelets, and also filled grains per panicle; hence, an overall increase in grain yield. The technology has been easily adopted by rice farmers in India, where trials conducted at five stations showed that adding 10 kilograms of BGA cultures as biofertilizer, costing about $3, gave extra yields worth $50 to $70 (Rao, 1978).

If farmers produce their own inoculants, the cost of biofertilizer would be negligible. Based on a large number of field trials in India, it was concluded that introducing algae technology into just 50 percent of rice-growing areas of that country would save about 380,000 tons of nitrogen worth about Rs. 14 million. The cost benefit works out to 1:10". (All India Coordinated Project on Algae, 1979).

Unexpected nitrogen gains of 50 kilograms per hectare per year have been recorded in soils beneath pure grass swards and in pure stands of pines and other conifers, where no symbiotic association was present. It may be possible that non-symbiotic nitrogen fixers were greatly stimulated under rhizosphere effects (Richards, 1974).

So far, no attempt has been made to find the effect of free-living, nitrogen-fixing bacteria or cyanobacteria on crop growth in Tanzania. A survey conducted on the abundance of free-living bacteria in 28 soils from five regions of Tanzania revealed that *Azotobacter* were absent in acid, highly

Table 3: **Symbiotic Associations in Biological Nitrogen Fixation**

Macrosymbiont	Microsymbiont
1. (a) Nodulated Legumes (b) Nodulated Parasponia (c) Nodulated zygophyllaceae	Root-nodule bacteria of legumes *(Rhizobium)*
2. Nodulated Non-Legumes of *Alnus* type	Filamentous microorganisms *(Frankia)*
3. Cycads	Cyanobacteria and possibly others (?)
4. *Azolla* (a floating aquatic fern)	Cyanobacteria *(Anabaena azollae)*
5. Lichens	Cyanobacteria *(Nostoc, Calothrix)*
6. Liverworts	Cyanobacteria *(Nostoc)*
7. Podocarp and other mycorrhizal nodules (?)	Fungi (?)
8. Leaf nodules (?)/stem nodules	Bacteria/Cyanobacteria *(Nostoc)*
9. Wet leaf-bacteria association (Phyllosphere)	Bacteria
10. Rhizosphere/Rhizoplane association (Associative symbiosis)	Bacteria *(Azospirillum)*

leached soils from Arusha and Mbeya. *Beijerinckia* were present (Chowdhury and Wenceslaus, 1976), but their numbers were not high enough to fix substantial nitrogen in soil. The success obtained in India and elsewhere on the algalization of rice fields merits its trial in Tanzania to attain nitrogen self-sufficiency on rice fields.

Exploiting Symbiotic Nitrogen Fixation

The term symbiosis commonly implies a degree of intimate association between two or more organisms, and, although they can live independently, a condition of mutual dependence or benefit when living together. Biological nitrogen fixation in symbiotic associations of plants (macrosymbionts) and microorganisms (microsymbionts) have been observed in many cases. Among the associations shown in Table 3, the crop legume-*Rhizobium* symbiosis, *Azolla-Anabaena* symbiosis and associative symbiosis between grasses/cereals and *Azospirillum* are the most promising for agriculture. The legume trees-*Rhizobium* symbiosis, and non-legume trees-*Frankia* symbiosis are important for forestry.

Putative symbiosis in the rest of the associations may have ecological implications, but has little promise for exploitation in agriculture at the present. It should be noted that many of the microsymbionts (mainly cyanobacteria) are free-living nitrogen fixers, while rhizobia and *Frankia* require the hosts or macrosymbionts for substantial nitrogen fixation.

Crop Legume-*Rhizobium* Symbiosis

The most important contribution of biological nitrogen fixation in both grains and pastures is that of the crop legume-*Rhizobium* symbiosis. Estimates on the nitrogen accumulation through symbiotic fixation in legume monocrops range from 50 to 350 kilograms per hectare per year, although unusually high estimates of 500 kilograms per hectare per year have also been claimed under the stimulus of grazing or mowing (Richards, 1974). However, it is generally accepted that nitrogen fixation of around 100 kilograms per hectare per year can be expected from the majority of grain and forage legumes, provided that successful symbiosis takes place. On legume-rhizobia symbiosis, the rhizobia infect the plant roots through the root hairs, induce the formation of root nodules, and enter into a symbiotic relationship where rhizobia convert the dinitrogen molecules to ammonia through an enzyme complex called nitrogenase. Ammonia is supplied to the host plant, which, in turn, provides the rhizobia with carbohydrates required for the fixation process.

Factors Influencing Symbiotic Nitrogen Fixation

Climate is the principal environmental factor determining the magnitude of nitrogen fixation in nodulated legumes. Radiation and CO_2 concentration affect photosynthesis, rainfall affects soil moisture, and daily changes in ambient and root temperatures affect plant physiology. Fortunately, radiation and CO_2 concentrations are not limiting in the Tropics.

The edaphic factors affecting nitrogen fixation, through their influence on root growth, rhizobial survival and activities, and on the symbiotic system itself, include soil pH, organic matter content, available nitrogen status, availability of P, Ca, and Mo, and toxicity of Al and Mn. Soil water and soil temperature are important physical factors, and are critical in the Tropics.

Although a good deal of information on these edaphic factors is available (Quispel, 1974; Nutman, 1976; Ayanaba and Dart, 1977; Vincent, *et al.*, 1978; Dobereiner *et al.*, 1978; Gibson and Newton, 1981), the interactions among them need careful study before we can make recommendations for exploiting the symbiotic nitrogen fixation by legumes.

Finally, successful symbiosis depends upon several biotic factors: the physiology and genetic characteristics of the host plant; the efficiency of the *Rhizobium* strain, its compatibility with the host plant, and its competitive ability to nodulate the host against native ineffective strains; the interaction and influence of other soil organisms on the establishment of introduced rhizobia; and parasitic and pathogenic organisms affecting the host plant.

The nodulation property of rhizobia is host-specific (Dart 1974), and infection is regulated by specific lectins (Bauer, 1977). Even within the same species of plants, there may be strong host variety-*Rhizobium* strain interaction (Weber *et al.*, 1971). Such interaction in soybean cultivars has been experienced in Tanzania (Chowdhury, 1977b). There are physiological differences among plants in their abilities to utilize the fixed nitrogen as well as the energy budgeting for fixing the nitrogen (Minchin *et al.*, 1981).

The most important factor influencing nitrogen fixation is the presence of efficient *Rhizobium* strains. When such bacteria are absent in the soil, efficient strains can be introduced through seed inoculation. This technology has given dividends in many countries, and will be discussed in more detail later in this paper.

While native rhizobia for a host are already present in the soil, the inability of the efficient

strains to nodulate the host in competition with the native strains also becomes a major limitation. A number of workers have emphasized the importance of survival and competitive ability of effective strains in the soil (Alexander, 1977a; Parker *et al.*, 1977).

After the introduction of efficient strains by seed or soil inoculation, microbial antagonism/predation may considerably limit the symbiosis (Alexander, 1977a; Chowdhury, 1977a). The problem lies mainly with the establishment of the introduced strains in the soil. Saprophytic competence of the introduced strain may often govern the survival of the introduced strains (Chatel *et al.*, 1968; Parker *et al.*, 1977).

The influence of the parasites and pathogens in limiting symbiosis has been described by several workers. For example, Orellana *et al.*, (1976) demonstrated that *Rhizoctonia solani*, which causes root-rot in soybean, also diminished nodulation and nitrogen fixation in soybean. The adverse effects of nematodes on nodulation and nitrogen fixation have been described by many workers. In Tanzania, root-knot nematodes were found to decrease the nodulation and nitrogen fixation in greengram and chickpea (Chowdhury and Mowo, 1979).

Azolla-Anabaena Symbiosis

In addition to functioning as free-living nitrogen fixers, some cyanobacteria can enter into symbiotic relationships with certain hosts (Stewart *et al.*, 1980). The host-cyanobacteria symbiosis with the most potential for agriculture is the *Azolla-Anabaena* symbiosis. *Azolla* is an aquatic fern which harbors nitrogen-fixing *Anabaena azollae* in its leaves. *Azolla* has been traditionally used as biological nitrogen input for rice in Vietnam and on some 1.3 million hectares in China (Brady, 1982). But in recent years, *Azolla* has been tried as organic manure or mixed crop with rice in India, Sri Lanka, Thailand, Indonesia, Italy, the Philippines and many other countries.

There are considerable variations in the growth rate and magnitude of nitrogen fixation in different species of *Azolla*. A recent international workshop on practical applications of *Azolla* for rice production, held at the University of Puerto Rico, provided a good deal of information on *Azolla*.

Two species of *Azolla*, *A. pinnata* and *A. nilotica*, are known to occur in the waters of Tanzania (Mshegeni, personal communication), but their practical utilization has not yet been tried. Where cultivation of *Azolla* is possible, the fern is likely to be a choice ingredient for compost making even for upland crops, particularly vegetables. The doubling time of *Azolla* is one to three days (Stewart *et al.*, 1980), and the rate of nitrogen fixation is 300 to 450 kilograms per hectare per year (Brady, 1982). The rate of decomposition is also rapid due to its high nitrogen content (Brotonegoro and Abdulkadir, 1978). It is very likely that the use of *Azolla* as a nitrogenous fertilizer and a green manure will be a common practice in many rice fields in the near future.

Associative Symbiosis Between Bacteria and Tropical Grasses/Cereals

Several grass/bacteria associations seem to have considerable potential as nitrogen-fixing systems in the Tropics (Dobereiner, 1977). Associations of nitrogen-fixing bacteria with the roots of forage grasses and cereals have been reported from various parts of the world. In many systems, *Azospirillum* spp. seem to be the major nitrogen-fixing bacteria present in the roots of grasses and cereals (Dobereiner, 1978). Two exceptions are *Paspalum notatum* and sugarcane, where *Azotobacter paspali* is responsible for nitrogen fixation.

Several other grass-bacteria associations have also been found, in which bacteria are not only present on the root surface, but are also found inside the root cells. The significance of such symbiosis is yet uncertain (Isle, 1982), but its potential cannot be denied. Understanding the physiology of the association in relation to plant genotype is necessary for its full exploitation (Dobereiner, 1978).

Legume Tree-*Rhizobium* Symbiosis

Though nitrogen fixation in crop legumes is recorded in many different countries, such information for leguminous trees is rather scarce. The highest rates of fixation are usually found in association with herbaceous legumes. For example, *Leucaena leucocephala* was reported to fix up to 800 kilograms of nitrogen per hectare per year (Halliday, 1981).

In Morogoro, Tanzania, a four-year-old *Leucaena leucocephala* stand was estimated to be fixing 110 kilograms of nitrogen per hectare per year (Hogberg and Kvarnstrom, 1982), and *Acacia mollisima*, a woody species, is reported to have fixed nearly 200 kilograms of nitrogen per hectare per year over a 30-year period (Richards, 1974). Finally, Dommergues (1981) reported that tropical legume trees can fix 200 to 500 kilograms of nitrogen per hectare per year.

Non-legume—*Frankia* Symbiosis

As many as 138 species of non legumes, belonging to 13 genera in eight different families,

are known to be nodulated by actinomycetes-like filamentous organisms (actinorrhiza) called *Frankia*. The amount of nitrogen fixed in some nodulated trees has been reported to be as high as 625 kilograms per hectare per year (Keya, 1979).

Logistics of Exploiting Biological Nitrogen Fixation

Although the rate of nitrogen application is increasing throughout the world, much of the added fertilizer nitrogen is lost either by leaching or volatilization. Upland crops use only 50 percent to 60 percent of the nitrogen they receive in commercial fertilizer nitrogen; rice crops recover only 25 percent to 35 percent of the added nitrogen in wet lands, losing 75 percent or more in ammonia gas (Brady, 1982).

The nitrogen lost in leaching is ultimately disposed of in the rivers and lakes, where it becomes a potential pollutant (Alexander, 1977b). These problems may be diminished by applying nitrogen in organic forms which release the nutrient slowly by microbiological processes in harmony with plant demand. Biologically fixed nitrogen is an organic product, and thus would contribute to the conservation of nitrogen fertility in soil as well as protection of the environment.

Immediate Strategy

Legume-rhizobia symbiosis appears to be the most promising system of biological nitrogen fixation, because legumes are included in all kinds of farming systems, and already are used in the Tropics for intercropping or as a component in mixed crop enterprises. Since legumes, grains and forages are high in protein, their nitrogen demand is very high. Consequently, if the legumes fail to symbiose, they will exhaust soil nitrogen. But if they symbiose efficiently with appropriate rhizobia, not only does the crop become independent of soil nitrogen, but the crop residues, after harvest, can contribute nitrogen to the soil.

Legume grains remain the major source of protein for most people of the world. The ability to produce them without the application of nitrogen fertilizer is a great saving for the farmers, and this technique can be further improved through the adoption of inoculation technology.

In order to exploit inoculation technology to the fullest, it will be necessary to:

1) Identify proper strains of rhizobia for particular legume species/cultivars. This can be achieved by isolating rhizobia from local soils, screening them for efficiency on a number of cultivars of the homologous host, and comparing the efficiency with known rhizobia. This should be done in the greenhouse for individual legume crops. In the case of introduced legumes, their nodulation with native rhizobia needs to be examined. If they are not efficiently nodulated, techniques to establish appropriate rhizobia in the soil need to be studied.
2) Conduct field tests of the pre-selected strains. This exercise is needed to find the adaptability of the rhizobia to different regions of a country. Such tests also will reveal the compatibility of this strain with the host, its competitive ability against local indigenous strains, its saprophytic ability to persist in the soil against soil population, and its ability to survive in the soil under given environmental conditions.

These are difficult and time-consuming tasks, but not impossible. Once the strains are selected for a wide range of field conditions and cultivars, or for a particular cultivar or condition, and their use proves beneficial, inoculant production technology can be developed. The problem lies with marketing the inoculants where storage facilities are inadequate.

Application of Inoculation Technology

The objective of inoculation is to introduce sufficiently high numbers of pre-selected rhizobial strains in the vicinity of emerging host roots. These introduced bacteria should have the ability to survive and proliferate in the soil, and also to form effective root nodules. These pre-selected strains are produced in mass culture in the laboratory, and incorporated in high numbers in a carrier material. Inoculation technology includes:

1) Screening and selecting appropriate strains of rhizobia that are efficient in nitrogen fixation with a particular legume host species.
2) Inoculant manufacture, which involves production of selected strains in bulk cultures in the laboratory, incorporation of the inoculant into a suitable carrier that will enable it to survive in high numbers during storage, and marketing the inoculant in suitable size packets.
3) Marketing and distributing inoculants to ensure that farmers receive them with high density of rhizobia. This involves storage at 5 degrees C. as the inoculants die very rapidly at ambient temperature, particularly in the Tropics.
4) Inoculating the seeds themselves, which involves coating them with the inoculant;

Table 4: **Mean Effect of Single Inoculation With Four Rhizobial Strains in the First Season, and N Application in Each Season, on the Nodulation at Flowering Stage and Grain Yields of Two Soybean Cultivars Over Three Consecutive Years (Average of Five Replications).**

	Uninoculated			Inoculated			
Year	Control	Applied N @ 90 kg/ha	IRj 2101 spc.	IRj 2114 str.	IRJ 2111	IRj 2123	S.E. Treatment means, ±
Mean dry nodule mass at flowering stage, mg/plant							
1979	0.0[c]	0.0[c]	85.9[b]	148.1[a]	182.4[a]	141.2[a]	18.90
1980	10.6[bc]	5.7[c]	5.5[c]	16.2[b]	30.0[a]	14.8[bc]	3.21
1981	7.4[b]	5.6[b]	3.6[b]	5.7[b]	17.2[a]	9.3[ab]	2.88
Mean grain yields, kg/ha							
1979	737[b]	1,198[a]	1,120[a]	1,102[a]	1,152[a]	942[ab]	96.0
1980	627[a]	525[a]	199[b]	484[a]	265[b]	557[a]	57.5
1981	334[a]	376[a]	286[a]	457[a]	321[a]	378[a]	59.9

Means followed by the same superscript within a row are not significantly different at 5% level.
Source: Chowdhury, Msumali and Malekela, unpublished data

or soil inoculation, whereby the inoculant is directly implanted into the seed drill either in liquid or granular form. When seed inoculation is finished, adhesives like gum arabic or substituted celluloses are used to ensure the contact of rhizobia with the emerging roots of sprouting seeds

Inoculation technology has produced useful results in Tanzania. The strong soybean cultivar and rhizobial strain interaction observed by Chowdhury (1977b) indicated the importance of selecting the appropriate rhizobial strain for a particular soybean cultivar.

Table 4 shows that inoculation with appropriate rhizobial strains resulted in soybean yields equivalent to the application of 90 kilograms of nitrogen (as urea) per hectare. The table also suggests the need to inoculate soybeans each year, as the introduced rhizobia failed to produce the desired nodulation and grain yields in subsequent years.

The nitrogen content of cowpeas was also improved by rhizobial inoculation; Chowdhury (unpublished data) observed nitrogen gains as high as 90 milligrams per plant in cowpea variety SVS 129.

The native cowpea rhizobia varied in nodulation and nitrogenase activity with different varieties of cowpeas. Among 50 cowpea varieties tested, 33 were well-nodulated with high acetylene reduction activity, and 17 were either sparsely nodulated or not nodulated at all by the indigenous rhizobia (Chowdhury and Ndunguru, unpublished data).

Rhizobial inoculation coupled with lime pelleting of lucerne resulted in about a 233-percent increase in crude protein contents in forage (Ikerra and Chowdhury, unpublished data). It was calculated that 109 kilograms of nitrogen per hectare could be fixed by lucerne during a 13-week growth period in pot culture, when inoculated and lime-pelleted seeds were sown.

Long-Term Strategy

The application of biological nitrogen fixation technology through legume inoculation is likely to give immediate dividends with crops that would respond to rhizobial inoculation. Such benefits will be obtained in terms of protein output per unit area of land.

The input of nitrogen to the soil through legume-*Rhizobium* symbiosis, however, will depend on the farming system and management practices. The use of legumes as green manure may be proposed, but its feasibility and economic return is doubtful where the rainfall pattern is unimodal. Recent advances in genetic engineering and biochemistry have yielded new possibilities of

transferring the nitrogen-fixing genes from bacteria to plant cells (Brill, 1979). While such sophisticated research may or may not be pursued in countries with limited trained manpower, algalization of rice fields and mass production of *Azolla* with efficient nitrogen fixation and rapid multiplication should receive serious attention for application by the farmers.

REFERENCES

Alexander, M. 1977a. Ecology of nitrogen-fixing organisms. p. 69-114. *In* Ayanaba, A. and P.J. Dart (ed.). Biological nitrogen fixation in farming systems of the Tropics. John Wiley & Sons Inc., N.Y.

———. 1977b. Introduction to soil microbiology. John Wiley & Sons Inc., N.Y. 467 p.

All India Coordinated Project on Algae. 1979. Algal biofertilizers for rice. Ind. Agric. Res. In., New Delhi. 61 p.

Ayanaba, A. and P. J. Dart. (ed.). 1977. Biological nitrogen fixation in farming systems of the Tropics. John Wiley & Sons Inc., N.Y. 377 p.

Bauer, W. D. 1977. Lectins as determinants of specificity in legume-*Rhizobium* symbiosis. 9:283-298. *In* Hollaender, A. *et al.* (ed.). Genetic engineering for nitrogen fixation. Basic Life Sciences. Plenum Press, London.

Brady, N. C. 1982. Chemistry and world food supplies. Science. 218:847-853.

Brill, W. J. 1979. Nitrogen fixation: basic to applied. American Scientist. 67:458-466.

Brotonegoro, S. and S. Abdulkadir. 1978. The decomposition of *Azolla pinnata* in moist and flooded soil. Ann. Bogor. 6:169-175.

Chatel, D. L., R. H. Greenwood and C. A. Parker. 1968. Saprophytic competence as an important characteristic in the selection of *Rhizobium* for inoculation. *In* 9th Int. Cong. Soil. Sci. Trans. II:65-73.

Chowdhury, M. S. 1977a. Effect of soil antagonists on symbiosis. p. 285-412. *In* Vincent, J.M., A.S. Whitney and J. Bose (ed.). Exploiting the legume-*Rhizobium* symbiosis in tropical agriculture. College of Tropical Agriculture Misc. Publ. #145. Univ. of Hawaii, Honolulu.

———. 1977b. Response of soybean to *Rhizobium* inoculation at Morogoro, Tanzania. p. 245-253. *In* Ayanaba, A. and P.J. Dart (ed.). Biological nitrogen fixation in farming systems of the Tropics. John Wiley & Sons Inc., N.Y.

———. Unpublished data.

Chowdhury, M. S. and J. G. Mowo. 1979. Antagonistic effect of root-knot nematodes on legume symbiosis. *In* Proc. 6th Austr. Legume Nod. Conf. Univ. of Western Australia. p. 101-102.

Chowdhury, M. S. and B. J. Ndunguru. Unpublished data.

Chowdhury, M. S. and T. Wenceslaus. 1976. Abundance of *Azotobacter* and *Beijerinckia* in some soils of Tanzania. Int. J. Ecol. Environ. Sci. 2:59-61.

Chowdhury, M. S., Msumali and Malekela. Unpublished data.

Dart, P. J. 1974. The infection process. p. 381-429. *In* Quispel, A. (ed.). The biology of nitrogen fixation. North Holland Publishing Co., Amsterdam.

Dobereiner, J. 1977. Biological nitrogen fixation in tropical grasses: possibilities for partial replacement of mineral or fertilizers. Ambio. 6:174-177.

———. 1978. Potential for nitrogen fixation in tropical legumes and grasses. 10:13-24. *In* Dobereiner, J., R. H. Burris, A. Hollaender, A. A. Franco, C. A. Neyra and D. B. Scott (ed.). Limitations and potentials for biological nitrogen fixation in the Tropics. Basic Life Sciences. Plenum Press, N.Y.

Dobereiner, J., R. H. Burris, A. Hollaender, A. A. Franco, C. A. Neyra and D. B. Scott (ed.). 1978. Limitations and potentials for biological nitrogen fixation in the Tropics. Basic Life Sciences, Vol. 10. Plenum Press, N.Y. 398 p.

Dommergues, Y. 1981. Ensuring effective symbiosis in N_2-fixing trees. *In* Graham, P. H., S. C. Harris and J. Halliday (ed.). Biological nitrogen fixation technology for tropical agriculture. E.I.A.T. Cali, Columbia. (in press).

Gibson, A. H. and W. E. Newton (ed.). 1981. Current perspectives in nitrogen fixation. Austr. Acad. of Sci., Canberra, Australia. 534 p.

Halliday, J. 1981. Agrotechnologies based on symbiotic systems that fix nitrogen. *In* Graham, P. H., S. C. Harris and J. Halliday (ed.). Biological nitrogen fixation technology for tropical agriculture. E.I.A.T. Cali, Columbia. (in press).

Hardy, R. W. F. and R. D. Holsten. 1973. *In* Ballantyne and Gurtaia (ed.). The aquatic environment. U.S. Government Printing Office, Washington, D.C.

Hardy, R. W. F. and V. D. Havelka. 1975. Nitrogen fixation research: a key to world food. Science. 188:633-643.

Hogberg, P. and N. Kvarnstrom. 1982. Nitrogen fixation by legume *Leucaena leucocephala*. Plant and Soil. 66:21-28.

Ikerra and M. S. Chowdhury. Unpublished data.

Isle, D. 1982. Leguminosae and *Homo sapiens*. Econ. Bot. 36:46-70.

Jensen, H. L. 1950. A survey of biological nitrogen fixation in relation to the world supply of nitrogen. *In* 4th Int. Congr. Soil Sci. 1:165-172.

Keya, S. O. 1979. The role of dinitrogen fixation in agroforestry. *In* Mongi, H. O. and P. A. Huxley (ed.). Soil research in agroforestry. Proc. of an expert consultation. ICRAF, Nairobi. p. 243-270.

Knowles, R. 1978. Free-living bacteria. 10:25-40. *In* Dobereiner, J., R. H. Burris, A. Hollaender, A. A. Franco, C. A. Neyra and D. B. Scott (ed.). Limitations and potentials for biological nitrogen fixation in the Tropics. Basic Life Sciences. Plenum Press, N.Y.

Minchin, R. E., R. J. Summerfield, P. Hadley, E. H. Robers and S. Rawsthorne. 1981. Carbon and nitrogen nutrition of nodulated roots of grain legumes. Plant and Cell Environment. 4:5-26.

Mishutin, E. N. and V. K. Shilnikova. 1971. Biological fixation of atmospheric nitrogen. Macmillan Publishing Co., N.Y. 420 p.

Nutman, P. S. (ed.). 1976. Symbiotic nitrogen fixation in plants. Cambridge Univ. Press, Cambridge, England. 584 p.

Odu, C. T. I. 1977. Contribution of free-living bacteria to the nitrogen status of humid tropical soils. p. 257-266. *In* Ayanaba, A. and P. J. Dart (ed.). Biological nitrogen fixation in farming systems of the Tropics. John Wiley & Sons Inc., N.Y.

Orellana, R. G., C. Sloger and V. L. Miller. 1976. Rhizoctonia-*Rhizobium* interaction in relation to yield parameters of soybean. Phytopath. 66:466-467

Parker, C. A., M. J. Trinick and D. L. Chatel. 1977. Rhizobia as soil and rhizosphere inhabitants. p. 311-352. *In* Hardy, R. W. F. and A. H. Gibson (ed.). A treatise on dinitrogen fixation. John Wiley & Sons Inc., N.Y.

Quispel, A. (ed.). 1974. The biology of nitrogen fixation. North Holland Publishing Co., Amsterdam. 769 p.

Rao, T. R. 1978. Blue-green algae boost rice yields. Intensive Agric. 16(5):19-20.

Richards, B. N. 1974. Introduction to the soil ecosystem. Longmans, London. 266 p.

Roger, P. A. and S. A. Kulasooriya. 1980. Blue-green algae and rice. The International Rice Research Institute, Los Banos, The Philippines. 112 p.

Stewart, W. D. P. 1974. Blue-green algae. p. 202-237. *In* Quispel, A. (ed.). The biology of nitrogen fixation. North Holland Publishing Co., Amsterdam.

Stewart, W. D. P., P. Rowell and A. N. Rai. 1980. Symbiotic nitrogen-fixing cyanobacteria. p. 239-277. *In* Stewart, W. D. P. and J. R. Gallon (ed.). Nitrogen fixation. Academic Press, London.

Subba Rao, N. S. 1977. Soil microorganisms and plant growth. Oxford and IBH Publishing Co., New Delhi, India. 289 p.

Venkataraman, G. S. 1961. The role of blue-green algae in agriculture. Sci. Cult. 27:9-13.

———. 1972. Algal biofertilizers and rice cultivation. Today and Tomorrow's Printers and Publishers, Faridabad (Haryana), India. 75 p.

Vincent, J. M., A. S. Whitney and J. Bose (ed.). 1978. Exploiting the legume-*Rhizobium* symbiosis in tropical agriculture. College of Tropical Agriculture Misc. Publ. #145. Univ. of Hawaii, Honolulu. 469 p.

Weber, D. F., B. E. Caldwell, C. Sloger and H. B. Vest. 1971. Some USDA studies on the soybean-*Rhizobium* symbiosis. p. 293-304. *In* Lie, T. A. and E. G. Mulder (ed.). Biological nitrogen fixation in natural and agricultural habitats. Plant and Soil. Special Volume.

DISCUSSION

Nitrogen Self-Sufficiency and Biological Nitrogen Fixation

Q: With reference to nitrogen fixation, is there any research onducted to compare the contribution of N from manure versus nitrogen fixation by plants?

A: In Tanzania, these two materials will complement each other. Legumes are knewn to add nitrogen to the soil.

(Comment by Wagner, University of Dar es Salaam): Two types of organisms fix nitrogen: bacteria and blue-green algae, and both of these are fr. living. Blue-green algae are commonly used in rice fertilization.

(Comment by Kihupi, UYOLE Agricultural Station): Some legumes, such as lupines and soybeans, have nodulation problems when first introduced to a new soil. These may need starter nitrogen. Without proper nodulation in a given soil, no fixation of nitrogen would occur. Thus, legumes would act like other crops, removing N from the soil!

Q: (Kondela, Lyamunga, R.T.I.): Nitrogen is fixed during symbiosis. How does it move from nodules to different parts of the plant, and to other plants?

A: (Liebhardt, Rodale Research Center): First, the N molecules go through a series of actions. Fixation depends on the energy supply from the leaves. Energy for fixation is dependent on the rate of photosynthesis. Nitrogen is fixed in nodules as ammonia, and is oxidized to nitrate and translocated to the top part of the plant. The translocation process is very important. During the growing season, N may be transferred to other plants, after the legume crop has decomposed to liberate N.

Q: (Nyonze, SUDECO): I would like to hear from the Rodale group on the role of manures and compost in sugarcane production.

A: (Kasembe, TARO): Manures and compost are being used in several countries, for example, the Philippines. Heaps of compost are mechanically spread in cane fields.

PLANT DISEASE MANAGEMENT

C.L. Keswani and J.M. Teri, Dept. of Crop Science, Faculty of Agriculture, Forestry and Veterinary Science, University of Dar es Salaam.

F.M. Shao, Tanzania Agricultural Research Organization, Ilonga, Private Bag, Kilosa

The organisms capable of causing plant diseases are numerous, representing different biological groups. For example, there are over 600 known viruses and viroids, about 250 species of bacteria (including actinomycetes) and similar organisms (mycoplasma and rickettsiae), probably 20,000 species of fungi, about 1,000 species of nematodes and a few species each of algae, angiosperms, protozoa and arthropods.

Because of the diverse nature of the organsms causing plant disease, there are different types of symptoms which appear on the plant. They include leaf spots, blights, wilts, mildew, rusts, smuts and others. Plant disease management is mainly based on interrupting the life cycle of the pathogen. Therefore, it is essential to know the identity and nature of the disease.

Depending upon the nature of the disease, various methods could be adapted for management. Here, we wish to emphasize only those methods which are resource-efficient and require little cash outlay by an individual grower.

It is a common fallacy that chemicals are necessary to control plant diseases. In practice, the most important aspects of disease management are common sense measures that protect the crop through good husbandry.

The basic methods of plant disease management are examined below.

Exclusion

The successful exlusion of a pathogen from a given geographical area depends mainly upon the mode of transmission and distribution of the pathogen. For example, pathogens that are widely distributed in an area, such as maize streak virus, coffee berry disease fungus, and rusts on maize or beans, cannot be excluded. All pathogens which are spread by wind are hard to control by this method. On the other hand, this method can be successfully applied against seed-borne pathogens, such as anthracnose-causing fungi in beans, rice blast fungus, common bean mosaic virus, etc.

Exclusion of plant pathogens can effectively be achieved through the following methods:

Treatment of propagative parts of the plant: This can be achieved by treating seeds or planting material with chemicals; or with other physical methods, such as hot water, steam, etc. In fact, seed treatments are low-cost insurance against many plant diseases, particularly the seedling diseases.

Quarantine: This is a legal method by which an infected plant material is restricted or embargoed in its movement from an area where it can be partially dangerous.

Inspection and certification of seeds and planting material: This method involves inspecting seeds and planting material for the absence of plant pathogens in growers' fields to ensure that farmers obtain healthy plant material.

Eradication of Plant Pathogens

Plant pathogens may be eradicated from areas in which they have become established using one or more of the following approaches:

Eradication of susceptible plants: Eradication of some pathogens can be accomplished by eliminating susceptible plants or alternate hosts. Alternate hosts are those plants which harbor the pathogen when the main crop is not in the field. For example, maize streak virus can propagate in several species of weeds, such as Sudan grass, and subsequently be transferred to maize through insect activity.

Crop rotation: In a sense, crop rotation is the eradication of the main and alternate hosts of the pathogens. Many plant pathogens survive in soil and plant debris only for a very short time in the absence of the host. Therefore, crop rotation deprives the pathogen of its host, thus reducing or eliminating it altogether.

However, crop rotation is not always feasible, because annual cash income or utilization of a single crop may often be essential to the economic well-being of certain farmers. A single annual crop grown year after year on the same piece of land is vulnerable to periodic outbreaks of devastating

plant diseases, particularly those caused by nematodes and other parasites like *Fusarium*, *Verticillium* and *Sclerotinia* spp.

In addition, crop rotation may help to improve soil fertility by changing the soil's microbial composition.

Soil treatment: Plant pathogens can be eradicated or controlled by dry heat, steam or hot water. Heating of soil has been used with much success, especially in small areas such as greenhouses and nurseries. This method of soil treatment in large fields may not be practical in developing countries like Tanzania.

A recent advance in the control of soil pathogens is "soil solarization," where the soil is covered with clear polyethylene for several days. This process raises the temperature of soil between 38 C and 55 C up to a depth of 20 centimeters, killing nematodes and other plant pathogens (Katan, 1981; Porter and Merriman, 1983).

Biological eradication of plant pathogens: This generally involves the control of soil-borne pathogens through the use of other microorganisms, whose activity is encouraged by appropriate manipulation of soil environmental conditions. This manipulation can be accomplished by the introduction of new organisms, or by increasing organic matter levels with compost, green manures or crop residues. For example, potato scab (*Streptomyces scabies*), root rot of cotton (*Phymatotrichum omnivorum*) and various other diseases can be controlled by plowing in suitable, fresh organic matter (Gregory *et al.*, 1952).

Eradicating soil-borne pathogens by biological methods is complex, and may be due to competition for nutrients, or antagonism, such as through the production of antibiotics and predation. In addition, antagonistic microorganisms have a capacity for genetic variation and are likely to produce new strains, which are able to attack resistant strains of the host.

Avoidance

The term "avoidance" is used here to describe methods which manipulate the microenvironments in which the crop is growing.

Crop husbandry should emphasize the optimum growth of the plant, thus reducing the chances of pathogen attack. Although cultural methods alone cannot completely control diseases, they have proved to be very valuable as supplementary aids. Cultural methods which may be useful in better management of plant diseases are:

Method and depth of planting: Faulty mechanical planting could damage the seed, predisposing it to attack by soil microorganisms. Planting should be at an optimal population for each crop. Overcrowding may result in abnormally high humidity, or have other effects on the microclimate within the canopy that encourage the growth of plant pathogens. On the other hand, high plant density may help reduce the spread of some pathogens, by physically hindering the dissemination of their propagules.

Planting depth has an important effect on some pathogens, notably those which attack seedlings. By delaying emergence, deep planting prolongs the susceptible phase between germination and emergence, thus favoring the attack by many plant pathogens. This has been shown in several seedling diseases caused by *Fusarium* and *Rhizoctonia*. Fairly shallow planting is preferable whenever possible, but much depends on the nature of the soil. For example, in dry soil, fairly deep planting may be necessary to ensure the supply of adequate moisture.

Conditions for germination, emergence and growth: These should be as favorable as possible in order to encourage rapid germination and early growth of the plant, so that it may quickly pass over the stage when it is most susceptible to soil-borne pathogens. The longer the period between planting and emergence, the more vulnerable the plant is to pathogens. Planting, therefore, should be in well-cultivated soil of suitable texture, pH, moisture, fertility and temperature. If emergence is likely to be slow, it may be useful to apply a fungicidal or fungicidal-insecticidal seed dressing to provide protection for seed and the emerging plant.

Planting date: Pathogens are able to infect susceptible plants only under certain environmental conditions, which sometimes are very exacting. Plants tend to reach maximum susceptibility at a certain stage in their development, and are resistant at others. Therefore, it may be possible to manipulate the planting time so that the crop passes through its susceptible phase at a time when the pathogen is either absent, or is unable to infect the plant because of unsuitable environmental conditions or lack of inoculum. For example, early-planted maize can escape maize streak infestation by avoiding later build-up of the insect that transmits the disease.

Fertilizer use: It has been known for many years that fertilizer treatments can affect the severity of plant diseases. High concentrations of nitrogen, particularly in readily assimilated form, as in nitrate, often predispose the crop to disease susceptibility. It is known, for example, that excess nitrogen makes rice more susceptible to rice blast

pathogen (*Pyricularia oryzae*). However, this is not always true, because fertilizer often makes the plant resistant by stimulating rapid growth. Deficiency of some trace elements also predisposes plants to attack by some pathogens and pests, emphasizing the importance of nutritionally well-balanced soil for improved crop production.

Intercropping: Information on the influence of mixed plant populations on plant pathogens is greatly lacking. However, it is generally accepted that the incidence of diseases in intercropping systems is lower than in monoculture (Innis, 1980; Mukiibi, 1982; Keswani and Mreta, 1982), a factor contributing to the widespread use of intercropping by subsistence farmers.

Under non-chemical farming conditions, this phenomenon may have been due to an ecological balance between the host-pathogen and the environment. There may, however, be exceptions to this observation, meaning that, if experimental evidence has to be provided, different crop combinations should be examined.

Because tropical ecosystems are generally more complex than temperate ecosystems, and because there are more plant diseases in the Tropics than in Temperate regions (Wellman, 1969), the study of plant epidemics is complex and needs a more integrated system approach (Robinson, 1976).

Use of disease-resistant varieties: Resistant varieties are crop varieties which are less prone to attack by different pathogens than susceptible varieties under certain environmental conditions.

Initially, to develop a resistant variety involves considerable financial resources and human effort. But once developed, it is the most resource-efficient, environmentally safe method of plant disease management.

Protection: Protection simply means preventing the pathogen from establishing itself in the host plant.

Chemical control: The discovery of Bordeaux mixture in the early 1880s may be considered the first important breakthrough in the history of chemical control of plant diseases. In some developing countries, this method of plant disease management has become an integral part of crop production, especially in the case of cash crops. In Tanzania to date, coffee berry disease and coffee leaf rust are controlled mainly by fungicides.

Chemical controls have certain limitations, particularly in developing countries like Tanzania. A major limitation is the increasing cost of fungicides, since the basic materials for their formulation are imported at the expense of much-needed foreign exchange. The potentially adverse effects of pesticides on non-target species and the microbial balance of nature are also matters of concern. In addition, human health hazards from residues, although not common, are a distinct possibility.

The indiscriminate use of fungicides has occasionally been responsible for phytotoxicity. Increasing evidence points to the development of pathogen resistance to chemicals, thus making the crop more vulnerable to pathogen attack.

If chemicals are to be used safely and efficiently, there is a need to develop chemicals which are free of these disadvantages. Some progress in this direction is evident in the development of systemic fungicides.

In addition, it may be necessary that future chemicals for plant disease control depend on botanical or microbial sources, which biodegrade safely, are less toxic to humans and plants, and may be effective in small quantities.

Advances in Plant Disease Management Techniques

Apart from the presently available plant disease management methods, plant scientists worldwide are striving to develop more economical, effective and safe disease controls. One of these is the immunization of plants against pathogens, similar to vaccines for animals and human beings. Some success in this direction has been obtained in the case of crown gall disease, caused by *Agrobacterium tumefaciens*.

Another area of recent advancement has been through genetic engineering, whereby resistant genes from one plant have been transferred to a susceptible host with better agronomic characteristics, making the receptor plant resistant to a particular pathogen.

It may be possible that these new technologies will be more resource-efficient, less hazardous and higher-yielding, thus contributing a great deal toward the self-sufficiency of food in developing countries like Tanzania.

Conclusions

In this paper, we have attempted to describe low-cost methods for plant disease management. Although we have described these control measures separately, a farmer should not apply any method in isolation. Several different plant disease control measures often must be combined to achieve best results with minimum cost.

The basic reason behind management of plant diseases is to raise healthy and vigorous crops. If this can be accomplished with agronomic practices, such as the use of healthy planting material,

effective soil management, optimal plant population, and adequate soil moisture, there will be little need to apply synthetic chemical controls.

However, despite our knowledge of good crop husbandry, serious outbreaks of plant diseases are common from year to year in different crops. Plant diseases often attain epidemic proportions due to factors beyond the farmer's control. Therefore, the most resource-efficient plant disease management system would prevent diseases prior to their becoming a serious threat, by using one or more non-chemical techniques, or by adopting an integrated approach, including chemical control. An integrated disease management system is a broad, ecological approach utilizing several control technologies in a compatible manner. Some plant disease control measures may be labor-intensive, and not practical in all cases.

Judicious use of the above methods, together with advances in new techniques, such as immunization and genetic engineering, might soon lead to the "Green Revolution Phase II."

REFERENCES

Gregory, K. F., O. N. Allen, A. J. Riker and W. H. Patterson. 1952. Antibiotics and antagonistic microorganisms as control agents against damping-off of alfalfa. Phytopath. 42:613-622.

Innis, D. Q. 1980. Bias in the study of traditional agricultural efficiency. Presented at meeting of the Association of American Geographers. Louisville, Ky. April, 1980.

Katan, J. 1981. Solar heating (solarization) of soil for control of soil-borne pests. Ann. Rev. Phytopath. 19:211-236.

Keswani, C. L. and R. A. D. Mreta. 1982. Effect of intercropping on the severity of powdery mildew on greengram. *In* Keswani, C. L. and B. J. Ndunguru (ed.) Intercropping. Proc. of the 2nd Symp. on Intercropping in Semi-Arid Areas. Morogoro, Tanzania. August 4-7, 1980. p. 110–114.

Mukiibi, J. K. 1982. Effect of intercropping on some diseases of beans and groundnuts. *In* Keswani, C. L. and B. J. Ndunguru (ed.). Intercropping. Proc. of the 2nd Symp. on Intercropping in Semi-Arid Areas. Morogoro, Tanzania. August 4–7, 1980. p. 116–117.

Porter, I. J. and P. R. Merriman. 1983. Effects of solarization of soil on nematode and fungal plant pathogens at two sites in Victoria. Soil Biol. Biochem. 15:39–44.

Robinson, R. A. 1976. Plant pathosystems. Springer-Verlag, Berlin. 184 p.

Wellman, F. L. 1969. More diseases on crops in the Tropics than in the Temperate zones. Ceiba (Honduras) 14:1-12.

Editor's Note: Discussion on this paper follows the paper titled "Alternatives to the Conventional Use of Chemical Pesticides."

WEED CONTROL

A. N. Minjas and R. K. Jana, Dept. of Crop Science, Faculty of Agriculture, Forestry and Veterinary Science, University of Dar es Salaam

Weeds have been a problem in farming from time immemorial. They affect the growth of crop plants at different phenological stages, cause serious losses in yield and quality, and increase production costs, ultimately reducing the farmer's net return.

Weeds in cultivated fields compete with crops for nutrients, water and light. Estimates of yield losses from weeds vary greatly, depending on the intensity of weed population, the weed species and the fertility level of the soils.

Various indexes have been developed to estimate yield losses due to weeds. Some of these indexes are: The Competition Index (Dew, 1972), Relative Crowding Coefficient (De Wit, 1960), Aggressivity (McGilchrist and Trenbath, 1971), Competition Ratio (Willey and Rao, 1980) and Interference Ratio (Minjas, 1982). The analysis and quantitative determination of yield losses due to weeds form the key steps in developing integrated weed control practices.

This paper examines the use of manure, compost, mulching and other weed control practices commonly used in agricultural fields, and discusses how a combination of these practices can lead to integrated control of weeds.

Weed Species Infesting Tanzanian Agricultural Fields

Although detailed statistical data are not available, yield losses caused by weeds in Tanzania may be assumed to be very high. This is because the climate and edaphic conditions of Tanzania encourage numerous weed species that compete heavily with crops.

Among the weed species listed in Table 1, seven have been reported to be among the ten worst weeds worldwide (Holm *et al.*, 1977). However, based upon their population intensity and aggressivity, *Cyperus esculentus*, *Rottboellia exaltata*, *Setaria verticillata* and *Striga* spp. have been

Table 1: **Principal Weed Species in Tanzania.**

Scientific Name	Associated Crops
*Cyperus rotundus**	Maize, cotton, rice, coffee
C. esculentus	Maize, wheat, rice
Rottboellia exaltata	Maize, sorghum, millet, wheat, sugarcane, soybean, greengram
Stiga spp.	Same as for *Rottboellia exaltata*
Brachiaria errifolia	Same as for *Rottboellia exaltata*
Setaria verticillata	Sugarcane, wheat
*Digitalia scalarum**	Maize, wheat
Ageratum conyzoides	Sorghum, maize
*Eleusine indica**	Maize, wheat, finger millet
*Echinochloa colunum**	Maize, cowpea, kenaf, greengram, rice
*Imperata cylindrica**	Tea
*Cynodon dactylon**	Sugarcane, maize, tea
Amaranthus spp.	Horticultural and field crops
Oxalis tatifolia	Coffee, maize, bananas, vegetable crops

*These weeds are among the top ten worst weeds in the world (Holm *et al.*, 1977)

Table 2: **Estimated Production Losses of Major Cereal Crops Caused by Weeds, Pests and Diseases in Africa as Compared to the World Average.**

Crop	Africa	World
	Percent losses due to weeds	
Maize	35.0	13.0
Rice	13.5	10.8
Wheat	15.0	9.8
Sorghum and Millet	25.0	17.8
	Percent losses due to pests & diseases	
Maize	36.6	21.8
Rice	20.2	35.6
Wheat	24.0	14.1
Sorghum and Millet	20.0	20.2

Source: Cramer, 1976

reported to be serious weeds in many crops in Tanzania (Minjas, 1978). The dominance of these weeds is mainly due to their ability to reproduce vegetatively by tubers and rhizomes; a large number of minute seeds with long viability and late physiological maturity; and efficient fruit and seed dispersal.

An understanding of these factors for the weed species in agricultural fields may yield valuable information for the selection of effective weed control measures (Soerjani, 1981).

Weed Control Measures

When compared with controls for plant diseases and insects, scientific weed control practices are poorly developed (Noda, 1977), possibly because the effect of weeds on crop yield is much less dramatic than that of diseases and insect pests. Table 2 depicts yield losses in major cereals due to weeds, pests and diseases in Africa as compared to the world average. The yield losses shown in Table 2 are only averages, and do not necessarily reflect the substantial losses experienced by farmers at any local environment.

At Morogoro, for example, Mugabe *et al.* (1980) have shown that yields of maize, sorghum, soybean and greengram are lowered by 61.4 percent, 96.2 percent, 97.1 percent and 97.3 percent respectively in non-weeded fields compared to weed-free ones. Such yield reductions call for scientific weed control practices in all agricultural fields if the farmer is to get any return from his inputs to the field.

The weed control measures employed in crop fields may be summarized as follows:

Seed-bed preparation: This includes plowing, disking, harrowing and their combination. These operations primarily aid weed control so that the crop seedlings do not emerge and establish in soil that has already been occupied by weed plants (Ross and Harper, 1972).

Preventive measures: Steps to ensure that weeds do not set seeds or establish within a crop. Use of clean crop seeds, well-decomposed manure and clean equipment are examples of preventive weed control measures. The use of clean crop seeds is particularly important because some weeds resemble the crop plants so much that it becomes impossible to control them until both plants have reached very advanced growth stages. This problem is particularly prevalent in Sumbawanga, Tanzania, where finger millet (*Eleusine coracana*) is frequently infested with a morphologically similar weed, *Eleusine indica* (Minjas, 1978).

Manual weeding: This is the most common method of weed control in most of the tropical developing countries. It includes hand-pulling of old weed plants, and hand-hoe weeding. This method is slow and tedious, and it is normally accomplished after weeds have depressed the growth of crops. In addition, many crops are weeded only once because of labor shortages during the cropping season.

Crop Rotation: Generally, certain weeds are associated with certain crops. For example, wild oats (*Avena fatua*) are commonly associated with wheat, barley and oats. Continuous cropping results in a build-up of such associated weeds, but crop rotation allows for weed control measures alternatively among crops. In Egypt, for example,

a rotation of rice, cotton and wheat effectively prevents infestation of certain noxious weeds (Noda, 1977).

Chemical Herbicides: Herbicides form the basic method of weed control in advanced technology agriculture. This is mainly due to their effectiveness, efficiency and cost-benefit relations.

In developing countries, where traditional agricultural technology is commonly employed, herbicide usage is not significant, because:

- Herbicides are extremely expensive.
- Application equipment is also expensive.
- Spray equipment needs to be carefully calibrated to deliver the required doses of the herbicide.
- Risks develop for non-target plants.
- Over- or under-application may occur with negative results.
- Specific herbicides are frequently not available when needed.
- Application equipment requires maintenance and replacement, which may involve additional cost.
- Some herbicides are ineffective against noxious, perennial weeds which are widely distributed in the tropical developing countries.

Each of these weed control measures has advantages and disadvantages. Manual weeding is cheap, but may not provide complete control and is not easily available at the peak of weeding period. Crop rotation may provide a solution, but if it is to become economically viable, it should be limited to large-scale farms, not the small farmers in tropical developing countries.

Herbicides have high efficiency in the control of limited weed species, but are generally poor against certain weeds.

Need for Integrated Weed Control

Application of several weed control methods, known as "integrated control of weeds," is more effective at controlling noxious weeds than any one method used alone. Seth (1977) has shown that combining cultural practices with herbicides, or using a combination of herbicides, provides long-term control of specific noxious weed species or a mixed weed species. However, increased knowledge of weed-crop competition, damage and yield losses due to weeds, emergence pattern of the weed populations, weed life cycles, and the ecology and physiology of weeds must be emphasized for integrated weed control to be successful.

Approaches to Integrated Control of Weeds

Ennis (1977) proposed a scheme that identifies some of the steps of an integrated weed control program (Figure 1). The scheme emphasizes understanding the weeds, their population dynamics, and the species that will cause the most damage before planning the control program.

Integrated weed control is a long-term process that includes monitoring shifts in weed populations. For hardy weeds, alternative technology may be needed as such shifts occur (De Datta and Bernasor, 1981). Crop rotations, preventive measures, mechanical controls and herbicides might all be used. This program will reduce the weed population to a tolerable level.

Figure 1: **Steps in Integrated Control of Weeds.**

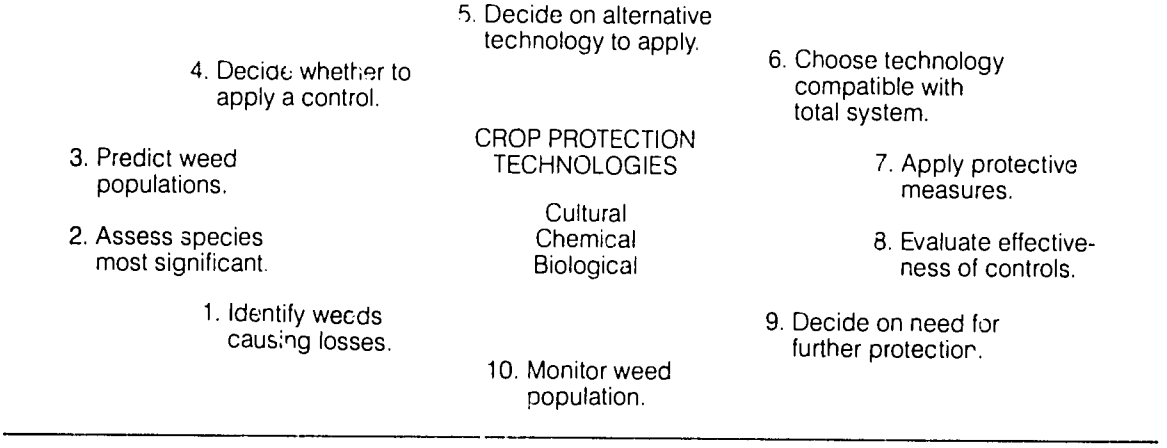

Source: Ennis, 1977

Evaluation of Traditional and Integrated Weed Control

Research that compares the economic returns from traditional and integrated weed control in crop fields is scant. However, Munroe *et al.* (1981) compared farmers' weed control practices and integrated weed control in upland rice in the Philippines. The major findings from these experiments were that:

1) Generally, there was no significant yield difference between different hand weeding treatments.

2) Use of an herbicide at high or low rate, plus one hand weeding, produced yields comparable to the weed-free check.

3) The higher rate of herbicide without hand weeding reduced populations of grass weed species but also resulted in a shift toward broadleaf weeds.

It appears, therefore, that high yields can be achieved by using labor-intensive weed control practices like cultivation and hand weeding. However, if labor is a constraint, use of an herbicide could eliminate post-plant cultivations and reduce the frequency of hand weeding.

Weed Competition in Relation to Fertilizer

Manure has been shown to have the same effect as inorganic fertilizers for a number of crops, if applied at the same rates. However, since crops are continually invaded by weed species, the fertilizer is bound to be shared by both the crop and weeds. Albamper (1976) provided an analysis of crop-weed-fertility interactions, emphasizing that weeds usually absorb nutrients faster and in larger amounts than crops, and therefore derive greater benefit relative to the crop plants. This observation is supported by other studies, such as that of Vengris *et al.* (1955).

Vengris *et al.* compared the nutrient uptake of weed-free corn, corn infested with *Amaranthus retroflexus*, and *A. retroflexus* alone. They found that the contents of N,P,K, calcium (Ca) and magnesium (Mg) were significantly lower in weed-infested corn, and that the K, Ca and Mg contents of *A. retroflexus* itself were appreciably greater than in weed-free corn. The better nutrient uptake by *A. retroflexus* may be due to morphological attributes or other factors, like high root demand (Drew *et al.*, 1969) or the ability to avoid roots of neighboring plants (Baldwin *et al.*, 1972).

Hurtston (1956) made the following remark for conditions encountered in England: "Fertilizers have the same effect on wild oats as cultivated cereals, so top-dressing an infested field may result in a heavier crop with more vigorous wild oat plants." This raises the point that, although the effect of artificial fertilizers is mainly observed in the year they are applied, farmyard manure (FYM) can have residual effects lasting for many years (Kyomo and Chagula, 1983). Hence, while FYM is cheaper than artificial fertilizers, its residual effect means longer-lasting weed populations and higher weeding costs. Long-term support of weed growth by manure can be reduced by spreading mulch on the field after tillage. Tillage removes the vegetative part of the weed, which manufactures food for further growth, while mulching cuts off light reaching the emerging weed seedlings.

Farmers without livestock can substitute well-decomposed organic material for FYM. This recycles nutrients absorbed by plants back into the soil.

They can also mulch with leguminous plant materials. Legumes contain nitrogen, and can serve a dual purpose of providing nitrogen and other elements absorbed from the soil (Hall, 1974), while providing a soil cover to prevent weed growth and minimize water loss.

The Future of Weed Control

Weed control will remain one of the farmer's most important operations in crop production. Selective weed control practices in monocrop systems normally result in shifts in the weed population toward more tolerant species. Under tropical conditions, these shifts can occur in a single cropping cycle.

An integrated weed control program would employ a combination of control measures, including herbicides. The rising cost of herbicides will require more national and international cooperation to allow small farmers to afford them. This is particularly important considering the high costs of labor in the present world. Plant breeders can possibly rescue the situation by looking at germ plasm that can be incorporated into plant materials that will inhibit weed growth (Putman and Duke, 1978).

REFERENCES

Albamper, J. 1976. Influence of weed infestation on effect of fertilizer dressings. Pflanzenschutz-Nachrichten. 29:191-235.

Baldwin, J. P., P. B. Tinker and P. H. Nye. 1972. Uptake of solutes by multiple root systems from soil. II. The theoretical effects of rooting density and pattern on uptake of nutrients from soil. Plant and Soil. 36:693-703.

Cramer, 1976.

Crammer, H. H. 1967. Pflanzenschutz and Welternte. Bayer "Pflanzenschutz," Leverkusen. 1:27. *In* Training course on formulation and application of pesticides. UNIDO.

De Datta, S. K. and P. C. Bernasor. 1981. Integrated control of perennial weed *Scirpus maritimus* L. in wetland rice. Proc. 8th Asian-Pacific Weed Sci. Soc. Conf. 1:219-229.

De Wit, C. T. 1960. On competition, versl. handbuwk, Onderz. 66:1-82.

Dew, D. A. 1972. An index of competition for estimating crop loss due to weeds. Can. J. Plant Sci. 52:921-927.

Drew, M. C., P. H. Nye and L. V. Vadyanathan. 1969. The supply of nutrient ions by diffusion to plant roots in soil. I. Absorption of potassium by cylindrical roots of onion and leek. Plant and Soil. 30:252-270.

Ennis, W. B. Jr. 1977. Integration of weed control strategies. p. 229-243. *In* Fryer, J. D. and S. Matsunaka (ed.). Integrated control of weeds. Univ. of Tokyo Press, Tokyo.

Hall, R. L. 1974. Analysis of the nature of interference between plants of different species. II. Nutrient relations in nandi *Setaria* and green leaf *Desmodium* associations with particular reference to potassium. Austr. J. Agric. Res. 25:749-756.

Holm, L., L. D. Pluckett, V. J. Puncho and P. J. Herberger. 1977. The world's worst weeds: distribution and biology. Univ. Press of Hawaii, Honolulu.

Hurtston, J. M. 1956. Wild oats. J. Royal Agric. Soc. 117:43-52.

Kyomo, M. L. and A. Chagula. 1983. Role of livestock in organic farming. Presented at Workshop on Resource-Efficient Farming Methods for Tanzania. Morogoro, Tanzania. May 16-20, 1983.

McGilchrist, C. A. and B. R. Trenbath. 1971. A revised analysis of plant competition experiments. Biometrics. 29:659-671.

Minjas, A. M. 1978. Weed problems and control practices in Tanzania. International Weed Sci. Soc. Conf. IITA, Ibadan, Nigeria. July 3-7, 1978.

———. 1982. Analysis of competition in binary and ternary mixtures involving a crop and three weed species. Ph.D. thesis. Univ. of British Columbia, Canada.

Mugabe, N. R., M. E. Sinje and K. P. Sibuga. 1980. A study of crop/weed competition in intercropping. *In* Keswani, C. L. and B. J. Ndunguru (ed.). Intercropping. Proc. of the 2nd Symp. on Intercropping in Semi-Arid Areas. Morogoro, Tanzania. August 4-7, 1980. p. 96-101.

Munroe, C. E., A. R. Samiono, D. T. O'Brien and E. C. DelaTrinidad. 1981. Evaluation of traditional and integrated weed control approaches in upland rice in the Philippines. Proc. 8th Asian-Pacific Weed Sci. Soc. Conf. 2:113-116.

Noda, K. 1977. Integrated weed control in rice. p. 17-46. *In* Fryer, J. D. and S. Matsunaka (ed.). Integrated control of weeds. Univ. of Tokyo Press, Tokyo.

Putman, A. R. and W. B. Duke. 1978. Allelopathy in agroecosystems. Ann. Rev. Phytopath. 16:431-451.

Ross, M. A. and J. L. Harper. 1972. Occupation of biological space during establishment. J. Ecol. 60:77.

Seth, A. K. 1977. Integrated weed control in tropical plantation. p. 69-87. *In* Fryer, J. D. and S. Matsunaka (ed.). Integrated control of weeds. Univ. of Tokyo Press, Tokyo.

Soerjani, M. 1981. Highlight of weed science in Indonesia. Proc. 8th Asian-Pacific Weed Sci. Soc. Conf. 2:93-99

Vengris, J., W. G. Colby and M. Drake. 1955. Plant nutrient competition between weeds and corn. Agron. J. 47:213-216.

Willey, R. W. and M. R. Rao. 1980. A competition ratio for qualifying competition between intercrops. Expt. Agric. 16:117-125.

Editor's Note: Discussion on this paper follows the paper titled "Alternatives to the Conventional Use of Chemical Pesticides."

ALTERNATIVES TO THE CONVENTIONAL USE OF CHEMICAL PESTICIDES

A. K. Karel and M. E. Quentin, Dept. of Crop Science, University of Dar es Salaam
D. L. Matthews, Rodale Research Center, Kutztown, Pa. 19530

Man has been raising plants and animals for food for thousands of years, and there has always been a battle between the farmer and invading insects. Weapons used against the insects have changed drastically over the years, as have the methods of agriculture in most areas of the world. Continuous monoculture plantings and heavy use of synthetic insecticides are common now. But continued use of these synthetic biocides has caused pests to build up resistance to them, necessitating more applications of increased dosages to obtain control.

Other consequences of repeated insecticide use are: 1) The natural balance between beneficial parasite and predator species and pest species is disrupted, allowing the pest population to flourish or rebound later on, usually in the absence of the beneficials; and 2) Other, non-target organisms, such as soil decomposers (earthworms, *Collembola*, etc.) are disrupted.

Crop Protection in Tanzania

Tanzania's economy is mainly dependent on agricultural crops. About 10 percent of the country's arable land is under cultivation in the forms of subsistence production predominantly, and commercial export production to a lesser extent (Karel and Ndunguru, 1980).

Originally, mixed cropping and intercropping, along with crop rotation and land fallowing, were major practices in subsistence farming. However, the increasing food demands of a rapidly growing population necessitated the transition from shifting cultivation to semi-permanent and permanent cultivation systems. Expansion of the cropping areas and changes in the cropping patterns occurred. Monocultures became prevalent, and other cultural practices such as crop rotation and land fallowing were almost abandoned in some areas.

The current emphasis on modern agricultural techniques and inputs to increase crop output may be detrimental to the crops in the long run. This is particularly true when the repeated, excessive use of broad-spectrum chemical pesticides causes pest outbreaks to occur due to insecticide resistance, disruption of the natural enemy populations, or a build-up of secondary pest populations which were previously unimportant.

Insect problems are becoming increasingly difficult in some production areas of Tanzania. Substantial progress has been made in controlling a number of pests of large-scale farming, with a major focus on cash crops. But pest damage is still extensive in food crops, particularly among small farmers, who are the major food producers in the country. A large proportion of the small farmer's produce, mainly cereals, suffers damage before and after harvest.

Recommended insecticides are employed by some farmers to reduce losses, yet the expected results often are not achieved. This may be due to improper application, particularly where correct dosage, timing and equipment for application are concerned. Ecological factors also interfere with the action of the chemicals.

Generally, one method of pest control alone will not provide effective, long-term control, because pests have adaptive abilities, and because of the many variables related to seasons, locations and cropping systems. Therefore, it is necessary to find alternatives that can be used with or without chemical insecticides. This often can be accomplished by taking a 'softer touch' approach to pest management.

Knowledge of the Crop Ecosystem

Before an effective crop protection scheme can be developed, thorough knowledge of the insect species residing in the crop is needed. A farmer should be able to recognize all stages of the beneficial and harmful species present, and know which life stage of the harmful species is most vulnerable. This will enable him to choose appropriate

control methods and time them to control pests, but preserve beneficial insects. Insecticide applications that do not coincide with the most vulnerable life stage of the pest are wasteful, and may do more harm than good, since beneficial species are also affected. If a farmer sees that predator or parasite populations will soon be large enough to provide natural control of a pest, time and money may be saved by reducing or eliminating insecticide applications.

Government agencies and universities can provide an invaluable service to farmers by helping them become more familiar with the crop ecosystems.

Polyculture vs. Monoculture

"It is widely accepted that the stability of a community and of its constituent species is positively related to its diversity," (Way, 1976).

Intercropping is commonly practiced in many Third World countries, in commercial farming systems in the U.S., and in backyard gardens worldwide. The benefits of such polyculture methods of planting are:

1) Efficient use of land (by planting two crops whose growth habits and requirements differ).
2) Efficient nutrient cycling and self-sufficiency (when intercropping legumes and non-legumes).
3) Reduction in insect pest problems. (a. Insects are unable to locate the appropriate host plant because the interplanted crop masks its odor. b. Insects are sometimes repelled by the interplanted crop. c. Parasite and predator densities increase in the diverse plant canopies.)

Field studies have been done to determine if polycultures actually do have fewer insect problems. Most have tested interplant combinations that are mentioned repeatedly in gardening folk literature and are commonly practiced by farmers and gardeners. Although some planting combinations have been ineffective against certain insects under certain conditions (Lathcef and Irwin, 1980; Gessell *et al.*, 1975), the majority have proved very effective (Risch, 1980; Burandav and Raros, 1975; Adesiyun, 1979; Matthews *et al.*, 1983; Francis, 1978; Francis *et al.*, 1978; Crookston, 1976).

Although intercropping is as old as agriculture itself, modern farming in most countries means large acreages of monoculture plantings, a far cry from the diversity that typifies a polyculture system. Consequently, insect pest problems arise, and with them the need for chemical insecticides.

If we are now to answer the question, 'Has the adoption of monoculture systems led directly to an increase in the number and severity of pests and diseases of forest crops?' the answer would have to be yes. We could add that there seems to be evidence that much of this is due to the uniform and crowded conditions that plantations provide and that the cultural operations associated with these crops have often accentuated problems that have had other origins, (Gibson and Jones, 1976).

Many insect problems can be avoided by planting in a polyculture system, planting hedgerows and leaving "weedy" areas near and perhaps within crop fields to encourage beneficial insects. "Optimal plant defense should incorporate any mechanisms that influence the feeding behavior of potential pests," (Atsatt and O'Dowd, 1976).

Increasing crop diversity by intercropping or mixed cropping can help to control insect pests by attracting predator and parasite populations, or attracting the pest from susceptible to non-susceptible crops. For example, beans and cowpea are interplanted with maize in East Africa to reduce pest damage. It has been found that foliar beetle (*Ootheca bennigseni*), stink bug (*Nezara viridula*) and other pests are attracted to maize, where they rest and cause less harm to the legume crop (Karel *et al.*, 1980; Karel and Matary, 1983).

In conclusion, species diversity is an important factor in preventing population outbreaks in communities. When possible, diversification of both faunal and floral varieties should be encouraged. The use of specific pesticides and biological control agents which attack only the pest without sterilizing the other fauna should prove to be a sound agricultural practice, (Pimentel, 1961).

Repellant Plant Studies

The concept of interplanting with aromatic plants to repel insect pests from their host crop has been known for years. Odors given off by the essential oils (secondary plant compounds) of these plants mask the odor of the host crop and/or actually repel or discourage attacking pests. Little research has been done to test this method.

Over the past four years, field trials have been conducted at the Rodale Research Center (RRC), to determine the effectiveness of certain mixed plantings of vegetables and flowers or culinary herbs against insect pests. The 1983 IFOAM paper titled "The Effect of Traditional Insect-Repellant Plants on Insect Numbers in a Mixed Planting System" (Matthews *et al.*, 1983) summarizes the results of the field trials. Many of the interplantings, particularly tansy (*Tanacetum vulgare*) and catnip (*Nepeta cataria*), were effective against pests.

Resistant Plant Varieties

The use of host plant resistance to insect attack has been practiced for many decades (Painter, 1951), and there are now more than 100 plant varieties resistant to more than 25 pests (Sprague and Dahmn, 1972).

Many pest problems can be avoided simply by growing varieties that have been bred to resist the attacks of pests. Many of today's popular crop varieties have been bred only to improve yields or processing characteristics, with little regard for their susceptibility to insect feeding. As a result, the "super yielders" often turn out to be "super delicious" to both disease and arthropod crop pests.

In his 1951 book "Insect Resistance in Crop Plants," an internationally known authority on host plant resistance, the late R. H. Painter, suggested three interrelated factors that affect resistance: 1) Plants may not be acceptable to the pest as food, oviposition site, or shelter; 2) Insects are adversely affected by feeding on the plant (antibiosis); and 3) Plants can tolerate feeding that more susceptible varieties cannot.

Successful development of resistant crop varieties has been a major factor in increasing and maintaining high levels of crop productivity. From a farmer's viewpoint, pest-resistant varieties are usually the most economical means of controlling insect pests. In East Africa, plant resistance to insects has been found in many sorghum varieties, which are naturally resistant to sorghum shootfly (*Antherigona soccata*). Many cowpea varieties have been identified that are resistant to green pea aphids (*Acyrthosiphon gossypii*) and leafhoppers (Karel and Malinga, 1980). Most of the cotton varieties developed at Ukiriguru are resistant to cotton jassids (*Empoasca* spp.) Recently, some bean varieties resistant to foliar beetle (*Ootheca bennigseni*) (Karel and Rweyemamu, 1983), and beanfly (unpublished observations) have been identified in Tanzania.

More emphasis should be placed on breeding resistance into varieties, and farmers should try to use the resistant varieties that are presently available. This may encourage seed companies to support research on resistant breeding. The importance of conserving an extensive gene pool from which desirable traits may be drawn for crop variety breeding cannot be over emphasized.

Cultural Control

Cultural control is the deliberate manipulation of the environment to make it less favorable to pests by disrupting their reproductive cycles, eliminating their food, or encouraging their natural enemies. Alternating the time of planting, tillage, irrigation, harvesting and weeding, as well as using crop rotation and pest-free seeds, are some of the ways to achieve cultural control.

Time of Planting: Some insect problems may be avoided simply by timing the planting of a crop so that its growth stage does not coincide with the growth stage of the pest. Knowledge of the insect's life cycle, and how it interacts with its host crop and the weather, is essential. Depending on weather and soil conditions, the farmer may choose to plant earlier or later than usual in order to avoid a pest problem.

Trap Crops: Certain varieties or plant types are preferred by insect pests. A way farmers can take advantage of this is to plant "trap" plantings of these susceptible varieties near the crop. Insects are attracted to the trap crop, where they can be destroyed or allowed to mature if they are not harming the main crop.

Sometimes trap crops are planted earlier than the host crop to ensure its success. A common practice in some areas of the U.S. is to mix green bean seeds with soybean seeds at planting. The Mexican bean beetle prefers the green beans, and causes little damage to the soybean crop.

Sanitation: Field sanitation can be an effective way of managing insect pests. Insects that spend one or more of their life stages in crop debris may be destroyed by disking or plowing after the harvest.

Timing of Harvests: Although most crops have an optimum harvest time, some, like clover and alfalfa, can be harvested earlier in order to destroy a building pest problem. If insect counts reveal that a large population of alfalfa weevil is building up, the hay is cut early, thus destroying the weevil in the larval stage, when it is most vulnerable. Although there may be a reduction in total tonnage, the protein quality of the hay may be better and the succeeding generation of weevils is lessened.

Crop Rotation: If a field is planted with varying crops every other year or every few years, the pests of each crop have less chance to build up than they do if their host crop is always available. Besides disrupting corn rootworm populations, rotating corn with a legume hay crop also improves soil conditions.

Hedgerows and Nectar Sources: Most beneficial parasites and predators need areas to reproduce, find nectar, and protect themselves from unfavorable environmental conditions. By planting or protecting native hedgerows or "weedy" areas adjacent to croplands, these useful insects are encouraged to stay nearby.

Integrated Pest Management (IPM)

The IPM concept relies on an integration of biological and chemical control methods. A trained scout surveys the crop, making visual counts or using pheromone traps. If pest numbers have reached the economic threshold, a control method is recommended. The economic threshold is the density of a pest population below which it fails to cause enough injury to justify the cost of control efforts. If possible, a selective or, at least, short-lived botanical insecticide should be used to disrupt the crop ecosystem as little as possible. If the number of pests is too low to warrant treatment, the scout will suggest withholding control measures. Weather data, such as temperature, rainfall, and Growing Degree Days, are also used in an IPM program.

IPM is becoming more popular because of a collapse of existing control systems and, in many cases, because of the danger of environmental contamination.

The success achieved with synthetic insecticides resulted in exclusive reliance on broad-spectrum products. This led to regular spraying programs on a routine, preventive basis, and provided a shield of insecticide protection whether the pest was present in damaging numbers or not. But it also resulted in the development of resistance to various insecticides by many insect pests. Brown (1970) reported 119 insect species of agricultural importance to be resistant to insecticides, and today, some pests are practically immune to all available pesticides. In addition, some secondary pests have become primary pests because their natural enemies were killed by the insecticides in use.

To control resurgence of the pests, farmers have increased applications of highly toxic insecticides. Under these circumstances, the cost of pest control often has made crop production profitless, resulted in serious health hazards to agricultural workers, and deteriorated environmental quality.

IPM requires tolerance of pests, because complete eradication is generally not needed for high yields. Most plant species can tolerate a certain level of damage without appreciable effect on vigor and seed yield. The levels of crop damage by pests can be appreciated by knowing the following parameters:

Economic Injury Level (EIL): EIL is the lowest pest population density that will cause economic damage to crops (Stern *et al.*, 1959). The determination of EIL is critical in defining the ultimate aim of any IPM program, and in delineating the pest population level below which damage is tolerable. EIL varies from crop to crop, season to season and area to area.

Economic Threshold (ET): ET is defined as the density at which control measures should be applied to prevent an increasing pest population from reaching the economic injury level (Stern *et al.*, 1959). The ET always represents a pest density lower than that of EIL, to allow control measures to take effect before the pest density exceeds the EIL.

General Equilibrium Level (GEL): GEL is the average density of an insect population over a long period of time. The population density fluctuates near this mean level as a result of parasites, predators and pathogens. Thus, control measures should be employed only to reduce and maintain the pest population at tolerable levels.

IPM emphasizes the use of existing regulatory and limiting factors such as inclement weather, competition within and between species and natural insect enemies. Changing the pest's environment to enhance the action of natural forces is an important goal of IPM.

IPM also stresses an interdisciplinary systems approach, which requires cooperation in the research, development and implementation phases. Cooperating entomologists, pathologists, weed scientists, agronomists, plant physiologists, economists, meteorologists, engineers, sociologists, mathematicians and computer scientists are important in collecting the information and formulating the management strategy.

Public understanding and acceptance of IPM is important, because IPM strategies demand more detailed studies of crops and their pests, and often take longer to bring pest populations under control. According to Luckmann and Metcalf (1975), bringing people to an understanding of pest management is the best way to deal with insect pest problems. Special efforts should be made by entomologists to educate farmers and the public in the methodology of IPM and the reasons for using it. Effective communication and salesmanship are the keys to successful public understanding and acceptance of IPM.

We in Tanzania, using IPM technology, have found that up to two applications of insecticides can be reduced in controlling bean pests (Karel, 1983b). IPM can also help prevent the deterioration of the environment and human health.

IPM programs in many advanced countries, especially in the U.S., have been partially or completely successful for many crops. In recent years, IPM programs have also been used successfully in some developing countries for certain crops, especially in Egypt, India, and Peru. An IPM program for soybean has been successfully employed in Brazil.

IPM is very new to the African continent, and virtually no reports were available until recently. In East Africa, we have recently started work on an IPM strategy for the management of bean pests. The experiments conducted so far have given very encouraging results. The use of better cultural practices, resistant bean varieties, *Bacillus thuringiensis* and judicious use of insecticides has resulted in better management of insect pests. High seed yield has been realized more economically than by chemical pesticide control (Karel, 1983b).

Based on the current results and other available information necessary for IPM, an IPM program for beans in East Africa has been proposed (Karel, 1983a). The proposed IPM model will be tried in paired fields in two locations in the Morogoro region, in which one field will be managed according to the IPM program, and the other by the farmer's own methods.

Tools of IPM

Some of the most effective non-chemical techniques, such as biological control, host plant resistance, and tillage, were widely used before synthetic pesticides ever appeared. Insecticide resistance, other side effects, and increasing cost of pesticides have renewed interest in the following non-chemical techniques:

Biological Control: Biological control is the manipulation of predators and parasites, including pathogens, to keep pest populations at desirable levels. It usually requires monitoring pest numbers and timing releases of beneficial species into the environment where control is needed. In classical biological control, the beneficial species is reared in the laboratory and insectary, and released or sprayed on the infested area. Included under biological control methods is the rearing, sterilization, and release of males of the pest species. These sterile males mate with fertile females in the field, but no offspring are produced.

These techniques have proved to be very effective against several major insect pests and weeds. So far, 120 different pests have been partially, substantially or completely controlled by the release and colonization of insect pathogens, parasites and predators. Successful biological control of several pests in East Africa has been reported by Karel and Odindo (1978).

Biological control, which utilizes parasites, predators and pathogens of insects, is relatively permanent, because the natural enemies are self-perpetuating. It is also economical, specific in action, and virtually free of adverse side effects and other disadvantages of chemical control (Karel and Odindo, 1978).

Microbial Insecticides: Compared to parasites and predators, fewer pathogens have been exploited for pest control. But many known pathogenic agents offer excellent alternatives to chemical controls. Fungi, bacteria, viruses and protozoans are the four main classes of pathogens used in biological control of pests.

Bacillus thuringiensis and *B. popillae* are two common bacterial pathogens found to control the population of many lepidopteran larvae and beetles. These spore-forming pathogens produce endospores, which enable them to live in a dormant state in an unfavorable environment. When an insect eats plant tissue containing the spores, it remains alive for a few days, but its gut becomes paralyzed and it cannot eat. Commercial preparations of *B. thuringiensis* and *B. popillae* are marketed by several companies. Karel (1982) found *B. thuringiensis* to give effective control of African armyworm *(Spodoptera exempta)* in maize, and of other pests in East Africa. Recently, it has been found to give excellent control of pod borer *(Maruca testulalis)*, a serious pest of bean and other legume seeds and pods. Even the older larvae, which are difficult to control with chemical insecticides, were killed by *B. thuringiensis* (Karel, 1983a).

Some 700 species of insect species are affected by viruses (USDA, 1978). Several types of viruses are known, but three are more common than others. These are Nuclear polyhedrosis virus (NPV), Cytoplasmic polyhedrosis virus (CPV) and Granulosis virus (GV). NPV has been effective in controlling armyworm, *(Spodoptera exempta)* in East Africa (Karel and Odindo, 1978).

Other biological agents like protozoa have limited potential because they act too slowly and must be produced on living hosts, making production costs high.

Nosema locustae is a commercially available protozoan disease to combat grasshoppers. A nematode (*Neoplectana carpocapsae* Weiser) attacks the larvae of several species of insects and is commercially available.

Several additional insect diseases that are not yet available in the U.S. are available in Europe.

Pheromones: Pheromones are communication chemicals released by insects. Much research is being done to synthesize insect pheromones of crop pests for use in IPM programs. Traps baited with pheromones are used to monitor pest population levels. Insects attracted to the traps are caught, giving an indication of field populations. Pheromones are also used in traps baited with a pesticide. Insects are drawn to the traps, contact the poison, and die. A pheromone affects only the insect species from which it was derived.

Juvenile Hormones and Growth Regulators: These are compounds found in insects that regulate how and when an insect develops. If properly timed, sprays of these compounds can disrupt a pest's life cycle and provide effective control. Some of them have been synthesized and are available for use in a pest management program.

Chemical Biocides

Contrary to the thinking of some people, the use of pesticides is not an ecological sin. When used according to sound ecological principles, chemical pesticides provide dependable and valuable tools for the virologist. Their use is indispensable to modern society (Nat. Acad. Sci., 1969).

However, much use of insecticides has so far been ecologically unsound, leading to insect pest resistance, outbreak of secondary pests, adverse effects on non-target organisms, and direct hazards to the user (Smith, 1970). Pesticides should be employed primarily as "stop-gap" or "fire-fighting" tools. The misuse and overuse of pesticides have been the most important factors in the growth of interest in IPM.

Pesticides can be better used if employed judiciously instead of routinely. Proper use of insecticides can be achieved by selective use, and selectivity can be either physiological or ecological.

Ecological selectivity can be achieved by proper timing of application, and by using the minimum amount of insecticide, to have the least adverse effects on non-target organisms (Karel and Odindo, 1978). Selectivity of pesticide use can also be achieved by improving application methods, which are often determined by the formulations available and the urgency of the circumstances. The development of application equipment that precisely directs the pesticide deposits into the habitat of the pest, thereby minimizing drift and contamination outside the target area, is another excellent way to achieve ecological selectivity. The recent development of the Electrodyn sprayer may, in the near future, further solve the problem of effective and safe application of insecticides to target areas.

Botanical Insecticides

It is not a sound practice to apply either synthetic or plant-derived biocides to an environment. However, if conditions are such that severe crop losses will occur without immediate treatment, a plant-derived insecticide is more desirable. These have less residual activity than synthetic insecticides and thus are probably less environmentally disruptive over time.

As the world's second largest producer of pyrethrum, Tanzania is well-supplied with this useful plant-derived insecticide. Some of the advantages of growing and utilizing pyrethrum are:

1) Like other botanicals, it is generally less disruptive to the environment because of its short-lived action.
2) It decomposes into harmless compounds in sunlight and soil.
3) Insects have not developed resistance to pyrethrum, as has occurred with many synthetic pesticides.
4) Growing, processing, and marketing pyrethrum in Tanzania would create jobs.
5) Growing pyrethrum instead of importing synthetic pesticides will help Tanzania gain independence and self-sufficiency in pest control.

Summary

A fundamental consideration in developing a sensible pest management program should be "How will this practice affect the environment now and in the future?" Although the cost of an IPM program may seem high at first, it may be more economical in the long term. Using less disruptive, locally available, botanical insecticides such as pyrethrum makes more sense than importing synthetic biocides, whose use may already be banned for human and environmental health reasons in the countries where they have been produced.

The techniques mentioned here cannot solve all pest problems, but should be tried, and where successful, should become recommended practices. Research and education should be encouraged in these pest management areas to develop successful regional practices for specific crops in Tanzania.

REFERENCES

Adesiyun, A. A. 1979. Effects of intercrop on frit fly (*Oscinella frit*) oviposition and survival on oats. Ent. Exp. and Appl. 26(2):208-218.

Atsatt, P. R. and D. J. O'Dowd. 1976. Plant defense guilds: many plants are functionally interdependent with respect to their herbivores. Science. 193:24-29.

Brown, A. W. A. 1970. Insect resistance. Farm Chemicals. September-November 1969; February 1970.

Buranday, R. P. and R. S. Raros. 1975. Effects of cabbage-tomato intercropping on the incidence and oviposition of the diamond-back moth (*Plutella xylostella* L.). Philip. Ent. 2(5):369-374.

Crookston, R. K. 1976. Intercropping: a new version of an old idea. Crop and Soils. 28(9):7-9.

Francis, C. A. 1978. Multiple cropping potentials of beans and maize. Hort. Sci. 13(1):12-17.

Francis, C. A., C. A. Flor and M. Prager. 1978. Effects of bean association on yields and yield components of maize. Crop Sci. 18:760-764.

Gessell, S. G., R. J. Prescheur and R. W. Hepler. 1975. Companionate plantings: do they work? Brooklyn Botanic Garden Record. Plants and Gardens. 31(1):24-28.

Gibson, I. A. S. and T. Jones. 1976. Monoculture as the origin of major forest pests and diseases. *In* Cherrett, J. M. and G. R. Sager (ed.). Origins of pest, parasite, disease and weed problems. The 18th Symp. of the Brit. Ecol. Soc. Blackwell Scientific Publications, Oxford, England.

Karel, A. K. 1982. Investigation on the control of African armyworm (*Spodoptera exempta* Walk) using *Bacillus thuringiensis* and insecticides. Presented at International Conference on the Control of Armyworm and Other Migrant Pests in Eastern Africa. Arusha, Tanzania. July 5-9, 1982.

———. 1983a. Integrated pest management in beans in East Africa. Presented at International Workshop on Integrated Pest Control of Grain Legumes. Gisania, Brazil. April 3-9, 1983.

———. 1983b. Integrated pest control in beans (*Phaseolus vulgaris* L.) in Tanzania. To be presented at 10th International Cong. of Plant Protection, Brighton, England.

Karel, A. K. and M. O. Odindo. 1978. Chemical vs. biological control of pests. *In* 6th FAO/SIDA Conference on Aquatic Pollution in Relation to Protection of Living Resources. RAO. TF-RAF 112:123-131.

Karel, A. K., D. A. Lakhani and B. J. Ndunguru. 1980. Intercropping in maize and cowpea: effect of plant populations on insect pests and seed yields. *In* Keswani, C. L. and B. J. Ndunguru (ed.). Intercropping. Proc. of the 2nd Symp. on Intercropping in Semi-Arid Areas. Morogoro, Tanzania. August 4-7, 1980. p.102-109.

Karel, A. K. and Y. W. K. Malinga. 1980. Leafhopper and aphid resistance in cowpea varieties. Trop. Grain Legume Bull. #20:10-11.

Karel, A. K. and B. J. Ndunguru. 1980. Review of appropriate agricultural production practices for small farmers in Tanzania. FAO, Rome. 75 p.

Karel, A. K. and R. D. R. Matary. 1983. The effect of insecticide application and plant populations on insect pests and yield of intercropped maize and beans. Bean Impr. Coop. 26. (in press).

Karel, A. K. and C. L. Rweyemamu. 1983. Resistance to the foliar beetle (*Ootheca bennigseni* Weise) in common beans. Bean Impr. Coop. 26. (in press).

Lathcef, M. A. and R. D. Irwin. 1980. Effects of companionate planting on snap bean insects *Epilachna varivestis* and *Heliothis zea*. Env. Ent. 9(2):195-197.

Luckmann, W. H. and R. L. Metcalf. 1975. The pest management concept. p.6-7. *In* Metcalf, R. L. and W. H. Luckman (ed.). Introduction to insect pest management. John Wiley & Sons Inc., N.Y.

Matthews, D. L., P. S. Michalak and R. J. MacRae. 1983. The effect of traditional insect-repellant plants on insect numbers in a mixed planting system. *In* Lockeretz, W. (ed.). Proc. 4th International Federation of Organic Agriculture Movements (IFOAM) Conference. Cambridge, Mass. August 18-20, 1983. (in press).

National Academy of Sciences. 1969. Principles of plant and animal pest control. Insect pest management and control. Nat. Acad. Sci. Pub. 1965 (3). 508 p.

Painter, R. H. 1951. Insect resistance in crop plants. Macmillan Publishing Co., N.Y. 520 p.

Pimentel, D. 1961. Species diversity and insect population outbreaks. Ann. Ent. Soc. Amer. 54:76-86.

Risch, J. 1980. Fewer beetle pests on beans and cowpeas interplanted with banana in Costa Rica. Turrialba. 30(2):228-229.

Smith, R. F. 1970. Pesticides: their use and limitations in pest management. *In* Rabb, R. L. and F. E. Guthrie (ed.). Concepts of pest management. North Carolina State Univ., Raleigh, N.C.

Sprague, G. F. and R. G. Dahmm. 1972. Development of crop resistance to insects. J. Environ. Qual. 1(1):201-234.

Stern, V. M., R. F. Smith, R. Van den Bosch and K. S. Hagen. 1959. The integrated control concept. 29(2):81.

United States Department of Agriculture. 1978. Biological agents for pest control: status and prospects. USDA, Washington, D.C. 138 p.

Way, M. J. 1976. Pest and disease status in mixed stands vs. monocultures: the relevance of ecosystem stability. *In* Cherrett, J. M. and G. R. Sager (ed.). Origins of pest, parasite, disease and weed problems. Blackwell Sci. Publ., Oxford, England.

DISCUSSION

Plant Protection: Pests, Diseases and Weeds

Q: (Diwani, University of Dar es Salaam): On the use of farmyard manure, only advantages have been stressed. I have observed that disease and weed problems seem to be more serious in manured plots. Would you please comment?

A: (Jana, University of Dar es Salaam): When the soil is enriched, weeds are also encouraged. Therefore, it is necessary to use integrated weed control measures.

A: (Liebhardt, Rodale Research Center): Increased nutrient availability leads to increased weed and pest problems. Thus, natural controls, such as the use of mulch to reduce light in cultivated plots to control weeds, and changing plant populations to reduce pest problems, would be useful.

Q. (Representative, UYOLE Agricultural Center): Maize Streak has been observed in Rhodes grass. Please comment.

A: (Keswani, University of Dar es Salaam): Over 25 different species of grasses are alternative hosts for Maize Streak virus. Therefore, weed control is essential in maize production. The major control technique, however, would be the use of resistant varieties.

Q: (UYOLE representative): *Cyperus* spp. and *Avena fatua* weeds have become a problem in some areas. Would you comment on their control?

A: (Jana): If no cultural alternative control is effective, use a selective herbicide as an emergency measure, and later go back to cultural control.

Q: (UYOLE representative): As regards the terms intercropping, mixed cropping and monocropping: There is a need for clarification on definitions. Would you please clarify?

A: (Jana): Intercropping means specific spacing and arrangement of different crops grown in the same plot (intercrops). In mixed cropping, there is no systematic arrangement or spacing of the intercrops. Monocropping means one crop is grown per season in a given area. Monoculture is a land-use term, meaning the same crop is grown over and over. Intercropping may enrich the soil, and suppress weeds, diseases and pests, if appropriate intercrops are used.

Q: Please comment on biological or natural controls, such as use of tobacco leaves, liquid manure and crotalaria seed in controlling pests of stored crops. I would like to know of any other methods of such kind in use in Morogoro. I have tried the above three methods.

A: (Quentin, University of Dar es Salaam): Some methods in use at Morogoro are application of pepper to control bean field pests, and use of edible materials to control stored bean pests. Ash is also used for storage pests. For further reference, the Rodale book, "Organic Plant Protection," would help.

Q: Composting and manuring may encourage spread of pathogens, rather than *only* create conditions unfavorable for such a problem. Please comment.

A: (Keswani): If you have well-decomposed compost, chances of pathogens surviving in this material are minimal, because the high temperatures (60 C to 70 C) attained during the decomposition process kill most of the pathogens.

NATIONAL IMPLICATIONS OF RESOURCE-EFFICIENT FARMING METHODS

M. Gabel and A. Heiland, Rodale Press Inc., Emmaus, Pa. 18049

What would happen if Tanzania's fertilizer supply were cut off?

A portion of Tanzania's present agricultural system was planned or structured at a time when energy and other inputs to agriculture were relatively abundant and cheap. This situation has changed drastically, for Tanzania, Africa and the rest of the world.

Without large inputs of fertilizer, the nature of the modern, energy-intensive agricultural system changes. Soil health, measured by biomass production, nutrient and humus content, becomes vital. The goal in such a food system is sustainable high production with minimum external inputs. (Kock, 1982) The system changes from an "energy-intensive" to an "information-intensive" operation. Instead of trying to dominate and control nature with expensive, high-energy concentrations of resources, the farmer depends more on knowledge, and on working with nature. Fertilizer's role changes from a prime mover of agricultural production to that of a corrector of nutrient deficiency. (Kock, 1982) Nitrogen self-sufficiency becomes crucial in such a system.

Tanzania is presently confronted by a shortage of nitrogen fertilizer. Without such fertilizers, Tanzania's food production could drop, and this could, without large imports of food, be disastrous for its people.

In 1980 (the most recent figures), Tanzania consumed 22,041 metric tons of nitrogen. (United Rep. of Tanzania, 1982a) This nitrogen came from "domestic" (7,700 MT) and foreign sources (15,300 MT). (FAO, 1981) Domestic fertilizer was

Chart 1: **Present and Projected Fertilizer Use in Tanzania.**

	1980		1985	
	MT of Material	MT of Nitrogen*	MT of Material	MT of Nitrogen*
Food Crops				
Maize	44,203	9,282	107,392	22,252
Rice	1,752	367	7,936	1,666
Wheat	260	54	4,552	955
Sorghum and Millet	5,739	1,205	8,862	1,861
Cash Crops				
Coffee	—	—	—	—
Cotton	—	—	—	—
Sisal	45,664	9,589	60,939	12,797
Tobacco	—	—	—	—
Tea	—	—	—	—
Sugarcane	7,342	1,541	13,050	2,740
Total	104,960	22,041	202,731	42,573

*Assumes source of nitrogen is sulphate of ammonia, with nitrogen content of 21%

Source: United Rep. of Tanzania, 1982a

Chart 2: **Estimated Manure and Nitrogen Production Per Year in Tanzania.**

Manure Source (weight)	kg Manure Per Day	kg Per Year Per Animal	Total Number of Animals, Tanzania (10^6)	Total Manure Produced Per Year from Native Animals (million MT)	kg Nitrogen Per Animal Per Year	Total Nitrogen Produced Per Year (1,000 MT)
Cow beef (250 kg)	13	4,745	12.9*	47	27	267
Goat (45 kg)	1.8	657	5.7	3.799	7.4	42
Sheep (45 kg)	1.8	657	3.8	2.533	7.4	28
Pig (67.5 kg)	4.41	1,609	.165	.265	11.25	2
Chickens (250 1.8-kg layers)	23.6 (per 450-kg unit)	8,623 (per 450-kg unit)	.096 (number of 450-kg units)	.827	118 (per 450-kg unit)	11
Ducks (250 1.8-kg ducks)	40.5 (per 450-kg unit)	14,783 (per 450-kg unit)	.010 (number of 450-kg units)	.148	205.8 (per 450-kg unit)	2
Ass	11.25	4,106	.165	.677	24.5	4
Human	1.33	487	20	9.740	5	48.7
Total	97.69	35,667	42.836	65	406.35	671.7

*Number of Mature Animals = 9.9×10^6. The number of mature cattle is estimated to be 53% of the total number of cattle. $53 \times 12.9 \times 10^6 = 6.8 \times 10^6$.

The remaining 47% are weaners and calves, 2 of which equal 1 mature cow in weight. $47 \times 12.9 \times 10^6 = 6.07 \times 10^6$.

$\frac{6.07 \times 10^6}{2} = 3.04 \times 10^6$ mature cattle. $6.8 \times 10^6 + 3.04 \times 10^6 = 9.9 \times 10^6$ mature cattle.

Source: FAO, 1981, Kyomo and Chagula, 1983, Van Vuren, no date

produced in Tanzania with imported raw materials. The cost to the Tanzanian farmer for these 22,041 MT (using 1981 farm prices for nitrogen in the form of sulphate of ammonia) was more than Tsh. 195.5 million or $23.8 million ($1,034.78/MT). (Samki, 1982)

The 22,041 MT of nitrogen fertilizer used in Tanzania in 1980 was only 19 percent of the average amount recommended for Tanzania's 13 major crops. (Samki, 1982) Most of the imported nitrogen fertilizer is reported to have been used on non-food cash crops such as cotton and coffee (Spurling, 1982), but there is some disagreement about this. (Kapaga, 1983, personal communication)

The difference between what was used in 1979/80 and what was recommended is over 94,000 metric tons. To meet the recommended levels of nitrogen application for its 13 major crops with imported fertilizers, Tanzania would need to purchase Tsh. 1.170 billion or $117 million worth (at 1983 import parity prices) of nitrogen each year. To meet the nitrogen needs of its major food crops, Tanzania would need 92,000 MT or Tsh. 920 million ($92 million) worth. (Spurling, 1983, personal communication)[1]

If the nitrogen needs of Tanzania's farmers are not met, a number of consequences could result. Depending on the crop and areas under cultivation, yields could be reduced by between 0 percent and 40 percent the first year, if no nitrogen fertilizer were applied to crops (other than what the rains could bring). For crops already being fertilized, the reduction could be about 40 percent; for crops currently receiving little or no fertilizer, the reduction would be much lower. The national average, given Tanzania's current rate of nitrogen, would probably be around 10 percent to 20 percent. Conversely, meeting the nitrogen requirements of Tanzania's crops would raise yields by at least 50 percent. (Liebhardt, 1981) If the shortage were to continue, yields would probably be cut by 50 percent to 75 percent. (Liebhardt, 1981) At Tsh. 1.75 per kilogram (1982–83 official

[1]The 1983 landed price for nitrogen fertilizer (material) in Dar es Salaam is $210 per MT which equals $1.00 per kg of nitrogen in the form of sulphate of ammonia (SA) and 80¢ per kg of nitrogen in the form of calcium ammonium nitrate (CAN). Recommended nitrogen use for 13 crops is 117,040 MT. $1 per kg × 117,040,000 kg = $117.04 million and $117.04 million × 10 = Tsh. 1.170 billion. Recommended nitrogen use for food crops is 91,900 MT. $1 per kg × 91,900,000 kg = $91.9 million. $91.9 million × 10 = Tsh. 919 million.

Chart 3: **Meeting Tanzania's Nitrogen Requirements With Cattle Manure.**

Number of mature cattle in Tanzania	9.9×10^6
Total nitrogen produced per year*	267,000 MT
Total nitrogen needed for Tanzania's food crops	66,000 to 92,000 MT
Total nitrogen needed for Tanzania's 13 major crops	90,000 to 117,000 MT

Nitrogen available under different assumptions, collection and confinement

Percent of Cattle Available	Percent Confinement	Percent of Manure Collected	Available Nitrogen (Metric tons)
50	60	80	64,080
50	50	75	50,062
60	60	80	76,896
70	60	80	89,712

*Assuming 27 kg of nitrogen per animal per year

producer prices), the loss from just Tanzania's maize crop due to nitrogen deficiency is more than Tsh. 500 million ($50 million).

In theory, the recommended levels of nitrogen application could be achieved with manure and compost, increasing yields by 40 percent to 100 percent beyond levels achieved without fertilizer. This would be worth an additional Tsh. 315 million ($31.5 million) to Tsh. 787 million ($78.7 million) to the Tanzanian farmer and economy.[2]

The decreased production caused by not meeting Tanzania's nitrogen needs, and the economic difficulties of having to purchase over $117 million worth of imported nitrogen fertilizer each year, make it imperative to emphasize the use of affordable and locally available organic materials.

Available Organic Materials

Chart 2 outlines the amount of manure currently available in Tanzania. Assuming half of Tanzania's cattle were confined for 60 percent of the time, and that 80 percent of the manure they produced while in confinement was recovered, 64,080 MT of nitrogen would be available to help meet Tanzania's fertilizer needs (FAO, 1981; Kyomo and Chagula, 1983). This would meet most of the nitrogen requirements of Tanzania's major food crops,[3] (see Chart 3), and would exceed by 21,000 MT the 1985 projected fertilizer requirements listed in the 1982 National Food Strategy Report. At 1983 import prices of nitrogen in the form of sulphate of ammonia this is worth Tsh. 760 million ($76 million).

Because crop residues are currently in widespread use throughout Tanzania as animal fodder, we do not add their potential fertilizer capabilities to this total. (Harwood, 1983, personal communication; Nishek, 1983, personal communication) Nor are added the manure totals from goats, sheep, pigs, chickens, ducks, and asses, because these animals either are rarely confined or their totals are not large enough to warrant national implications. On a regional, local, and individual farm scale, this could change.

Other organic sources of nitrogen, such as intercropping, green manures and leguminous trees like *Leucaena leucocephala*, will be dealt with later.

Costs and Benefits

To supply this organic fertilizer to Tanzania's crops will be neither easy nor inexpensive, but it has the advantage of being easier and less expensive than meeting Tanzania's fertilizer needs with imported fertilizers.

One cost of meeting Tanzania's nitrogen needs with locally available organic materials is the extra tools that will be needed. To move cattle manure from animal kraals or holding pens to a compost pile, where the nitrogen can be preserved until needed, will require two tools that are not now in widespread use on Tanzania's 2.25 million farms: a turning fork and either a single animal bullock cart or a wheelbarrow.

[2] 750,000 MT maize − 300,000 MT = 450,000. 450,000 MT × 40% = 180,000 MT.
Tsh. 1.75 × 180,000 kg = Tsh. 315 × 10^6 ($31.5 × 10^6).
450,000 MT × 100% = 450,000 MT.
Tsh. 1.75 × 450,000 kg = Tsh. × 10^6 (78.7 × 10^6).

[3] 64,080 MT nitrogen (amount available from cattle manure) within the range of 66,000-92,000 MT nitrogen (total N needed for all food crops).
68,000,000 kg × $1 per kg = $68 million or Tsh. 680 million at 1983 exchange rate of Tsh. 10 = $1.

Chart 4: **Results of Meeting Recommended Levels of Nitrogen Application on Tanzanian Food Crops.**[1]

Crop	1981 Production in MT	Est. Gross Per Capita Supply[2] (kg)	Increased Total Production (MT)	Est. Increased Gross Per Capita Supply[3] (kg)	Increased Production (kg/ha)	Increased Value Total* Tsh. $	(Official Producer Prices) Per hectare[4,5] Tsh. $
Maize	750,000	53	1,125,000	60.7	865	1,968,750,000 205,078,120	1,513.75 @ 1.75 Tsh./kg 157
Rice	200,000	15.6	300,000	16.2	1,999.5	900,000,000 93,750,000	5,998.5 @ 3/kg 624
Wheat	70,000	7.36	105,000	5.67	21	262,500,000 27,343,750	5,250 @ 2.5/kg 546.8
Cassava	4,650,000	251	6,975,000	376.8	7,342.5	6,277,500,000 653,906,250	6,608 @ .90/kg 688
Sorghum	220,000	11.8	330,000	17.8	943.5	528,000,000 55,000,000	1,509 @ 1.6/kg 157
Millet	140,000	7.5	210,000	11.34	954	336,000,000 35,000,000	1,526 @ 1.6/kg 159
Peanut (Groundnut)	56,000	3	84,000	4.54	894	487,200,000 50,750,000	5,185.2 @ 5.8/kg 156.4
Cowpea	21,000 ('75 to '77 FAO est.)	1.13	31,500	1.7	429 ('76 FAO est.)	110,250,000 11,484,375	1501.5 @ 3.5/kg 156.4
Pigeonpea	21,000 ('75 to '77 FAO est.)	1.13	31,500	1.7	750 ('76 FAO est.)	42,000,000 4,375,000	1,500 @ 2/kg 156.25
Coconuts	320,000	17.3	480,000	25.9	—	2,016,000,000 210,000,000	- @ 4.2/kg -
Pineapples	48,000	2.6	72,000	3.88	—	144,000,000 15,000,000	- @ 2/kg -
Sweet Potatoes	330,000	17.8	495,000	26.7	9,339	742,500,000 77,343,750	14,008.5 @ 1.5/kg 5,185.3
Bananas	790,000	42.6	1,185,000	64.02	16,593 ('76 FAO est.)	3,555,000,000 370,312,500	49,779 @ 3/kg 5,185.3
Totals	7,616,000	431.82 x .50 = 215.9 kg/cap	11,424,000 MT	616.95 x .50 = 308 kg/cap.		17,369,700,000 1,809,343,700	

*1983 exchange rate is Tsh. 9.6 = $1

[1]Assumes a 50% level increase in production

[2]Adapted from FAO Food Balance Sheet for Tanzania, 1975–77, using 1980 FAO import and export figures and 1981 production and population figures. It is estimated that 50% of the domestic supply goes for purposes other than human consumption

[3]Adapted from FAO Food Balance Sheet for Tanzania, 1975–77, using 1981 FAO production and population figures and assuming no imports or exports for the above crops

[4,5]Based on 1982–83 Official Producer Prices from the World Bank; and based on URT Ministry of Agriculture's Monthly Market Bulletin, April, 1982

The manufacture of 2.25 million forks and wheelbarrows is a sizable investment of materials, manpower and capital, but it is well within Tanzania's capability. For example, more than 2.5 million hoes are being manufactured in Tanzania in 1983. (Kapaga, 1983, personal communication) The estimated cost of each fork is about Tsh. 80 ($8.00). (Juckett, 1983, personal communication)[4] The total for 2.25 million forks comes to Tsh. 180 million ($18 million). Wheelbarrows cost about Tsh. 750 each ($75), or Tsh. 1.6 billion ($168.75 million) for all 2.25 million farms. (Nishek, 1983, personal communication) Oxcarts cost considerably more, but not as many would be needed. Because farmers can rent or share the carts (Ngaiza, 1983, personal communication), 500,000 would be enough for one on every five farms.

These tool costs are basically one-time start-up costs, and are less than two-years' cost of meeting the recommended levels of nitrogen fertilizer. Spread out over a five-year implementation schedule, total costs would be about Tsh. 373 million ($37.35 million) per year to the Tanzanian farmer. This is about Tsh. 159 ($16.00) each. Annual tool maintenance and replacement costs would be a fraction of this.

The cost of the tools needed for efficient composting of Tanzania's organic materials could be carried by the Tanzanian farmer, perhaps with government or international assistance. As will be noted later, the increased benefits to the farmer would justify his investment in these tools.

[4]Cost estimate is based on cost of manufacturing forks in United States on a scale of hundreds of thousands.

Education

Another necessary cost associated with a successful transition to nitrogen self-sufficiency will be a widespread educational campaign. In such an effort, the various goals, benefits, tools and techniques of the overall nitrogen self-sufficiency strategy need to be effectively communicated to Tanzania's 15 million farmers, their Extension workers, agricultural researchers and government administrators. Depending on the magnitude, such an educational effort could cost from Tsh. 2.5 million to Tsh. 10 million ($250,000 to $1 million) per year.

Production

If the nitrogen available in Tanzania's cattle manure were used for fertilizer on Tanzania's major food crops, production could be an average of 40 percent to 100 percent higher than levels achieved with no fertilizer at all. (Liebhardt, 1983, personal communication; Grimes and Clarke, 1962; Anonymous, 1953; Lockeretz *et al.*, 1980) Chart 4 illustrates what these increases could mean (assuming a 50-percent increase) to total production in tons, production per hectare, total dollar value and availability of food per person. The total increased value in official producer prices for maize alone is more than Tsh. 2 billion ($200 million). All together, nearly Tsh. 6 billion ($600 million) worth of crops could be added to Tanzania's economy if the country's average nitrogen recommendations were met (see Chart 5). This would be Tsh. 2,670 ($267) each year for each farm in Tanzania—more than three times the cost of the tools needed to carry out this type of farming.

However, a 50-percent production increase in just one year is practically impossible. It would be more realistic to expect a 10-percent increase the first year, 20 percent the second year, and 30 percent the third year.

Employment

In addition to increasing the quantity and value of Tanzania's agricultural production, the manufacture of carts and forks could provide employment for many Tanzanians. For example, to produce 2.25 million forks in five years using Tanzania craftsmen and manufacturing facilities would employ annually an estimated 2,250 people (assuming each person produced 200 forks per year), or 4,500 people (assuming each person produced 100 forks per year).[5]

The production of 450,000 carts per year would employ an estimated 6,700 persons (assuming three people produce one cart each day, about 200 total per year). (Nishek, 1983, personal communication)[6]

Given Tanzania's annual requirement for 135,000 new jobs in agriculture, (The Futures Group, 1983) it makes good economic and social sense not to try and emulate European and North American food systems, which are low-labor, and energy-, material-, and capital-intensive.

Time

Another cost of using organic materials for nitrogen fertilizer is the time it will take the average Tanzanian farmer to collect, compost and spread them. Time costs will vary according to the different systems used. The more simple the composting method, the less time required. The costs in time to the average Tanzanian farm—in

Chart 5: **Current Value of 13 Food Crops Produced in 1981 in Tanzania (at Official Producer Prices in Tsh. and U.S.)**

Crop	Value (Tsh.)	Value ($)
Maize	1,312,500,000	136,718,750
Rice	600,000,000	62,500,000
Wheat	175,000,000	18,229,166.66
Cassava	4,185,000,000	435,937,500
Sorghum	352,000,000	36,666,666.66
Millet	224,000,000	23,333,333.33
Groundnut	324,800,000	33,833,333.33
Cowpea	73,500,000	7,656,250
Pigeonpea	42,000,000	4,375,000
Coconuts	1,344,000,000	140,000,000
Pineapples	96,000,000	10,000,000
Sweet Potatoes	495,000,000	51,562,500
Bananas	2,370,000,000	246,875,000
Total	*11,593,800,000*	*1,207,687,500*

1983 exchange rate is Tsh 9.6 = $1

The difference in value between 1981 production and production increased by 50% over 1981 levels is Tsh. 5,775,900,000 ($601,656,250).

$1,809,343,750	(Assumes a 50% increase in production)
− 1,207,687,500	(Value of 1981 production at current producer prices)
601,656,250	(Difference)

Source: United Rep. of Tanzania, 1982b.

[5]450,000 forks per year ÷ 200 forks per year = 2,250 people. 450,000 forks per year ÷ 100 forks per year = 4,500.

[6]An estimated 3 people can produce 1 single animal cart per day. 450,000 carts per year ÷ 200 carts produced for every 3 persons per year + 2,250 × 3 or 6,758 persons per year.

terms of number of animals and distance to fields—would be about 240 hours per year per farm. This breaks down to about 20 minutes each day to collect manure and put it in the compost pile and another 20 minutes to spread the compost. (Ruttle, 1983, personal communication)[7] This extra 40 minutes each day, although seemingly a small amount of time, could be quite difficult for some farmers to deal with. But the rewards of increased production make such an added burden a wise investment of a limited resource. The average Tanzanian farm, given the increase in value of farm crops, would in effect be earning Tsh. 11 ($1.10) per hour for that extra 240 hours of labor needed to collect, compost and spread available organic materials. This is about Tsh. 3,000 per farm. The average Tanzanian farm's annual income could be increased 50 percent from Tsh. 5,152 ($536.75) to Tsh. 7,728 ($805).[8]

Foreign Exchange

There are a number of other benefits that could result from the implementation of a widespread program to meet Tanzania's nitrogen fertilizer needs from indigenous organic materials. One such benefit would be a better foreign exchange picture. Without having to spend precious foreign exchange on fertilizer imports and food, Tanzania would have more capital to invest in other areas.

By freeing itself from the need for imported nitrogen fertilizer, which is tied to the price of fossil fuels, Tanzania would eliminate a cause of inflation and avoid the long-term cost increases that will affect the Earth's non-renewable energy sources. Over a 10-year period, Tanzania could save Tsh. 4 billion to Tsh. 6 billion ($400 million to $600 million) in foreign exchange by switching to organic materials to meet its recommended nitrogen fertilizer needs.[9] The amount saved will depend on how much is spent on implementing the use of organic materials.

Soil Vitality

Another benefit resulting from using organic materials to meet fertilizer needs is that Tanzania's soil vitality would be improved. (Steffen, 1979) The increased humus content of the soil would help retain both nutrients and water, thereby making crops healthier and better able to withstand the stresses of drought, disease and insects. (Oelhaf, 1978) Soils high in organic matter lose significantly less nitrogen, because leaching and gaseous volatilization losses are less. (Steffen, 1979) Organic materials in the soils will also help reduce Tanzania's soil erosion from wind and water, (Steffen, 1979) which is a serious problem in parts of central Tanzania, such as Arusha, Singida and Dodoma. (Semoka, 1983, personal communication)

Because organic materials are already on or near the farms where the nitrogen need is, there will be no need for the Tanzanian government to continue paying the annual Tsh. 150 million ($15 million) in subsidies to transport fertilizers to the countryside where they will be used. (The World Bank, 1982)[10] Clearly, such a move could not happen overnight, but a 10-percent to 20-percent reduction could be implemented.

Imports

Besides all of the above, the increased production brought about by meeting the recommended nitrogen application levels in Tanzania will allow for the reduction and eventual elimination of Tanzania's major food imports--maize, rice, and wheat. In 1982, this would have saved the country Tsh. 956 million ($99.6 million) (The World Bank, 1982).[11] If production increases are large enough and foreign economic conditions allow, Tanzania could possibly export its surplus agricultural products as it once did.

Other Regenerative Strategies

As the previous pages point out, recommended nitrogen fertilizer needs for Tanzania's major food crops could be met by using just part of the manure produced by its cattle. Most of the nitrogen needs for cassava could be met by intercropping cassava with peanut, cowpeas and pigeonpeas.

Another strategy that could be used with composting, green manures, crop rotations and interplanting cassava (and other crops) with legumes or maize, is the widespread planting of *Leucaena leucocephala*.

---

[7] 20 minutes per day to collect manure × 365 = 120 hours per year; plus 20 minutes per day to spread organic material × 365 = 240 hours per year.

[8] Tsh. 11,593,800,000 (value of food crops produced in 1981 at 1981/82 producer prices) ÷ 2.25 × 10^6 farms = Tsh. 5,152.8. Tsh. 17,369,700,000 (value of yields increased by 50% from 1981 production levels at 1981/82 producer prices) ÷ 2.25 × 10^6 farms = Tsh. 7,720. (Tsh. 7,720 ÷ 240 hours) − (Tsh. 5,152.8 ÷ 240 hours) = Tsh. 11 ($1.10/hour).

[9] In order to meet nitrogen requirements for their 13 major crops with imported fertilizers over the next 10 years, annual rate of Tsh. 760 million ($76 million) is multiplied by 10.

[10] Note: It is not known what percent of the total subsidy goes to transporting just nitrogenous fertilizers.

[11] The value of net commercial and aid imports of maize, rice and wheat totaled $99.6 million in 1981/82.

If each farm in Tanzania that could grow *L. leucocephala* planted one-half acre (.2 ha) of this leguminous tree crop, more than 56,250 MT of nitrogen would be fixed in the soil by the trees' roots. (Hogberg and Kvarnstrom, 1982)[12] This is 255 percent more nitrogen than Tanzania used in 1980, and represents about 60 percent of the total recommended nitrogen fertilizer for Tanzania's major food crops.[13] This 56,250 MT of nitrogen would be worth Tsh. 560 million ($56 million) at current import parity prices of nitrogen in the form of sulphate of ammonia.[14] Such a major undertaking would require a large investment in time and resources, but would yield substantial benefits, as well.

In addition, *Leucaena*, because of its rapid growth rate (nearly 20 feet per year), could be trimmed back each year and the trimmings used for firewood. Because 99 percent of Tanzania's population depends on firewood as its chief fuel, and 96 percent of the total wood consumption in Tanzania is for fuel, planting one-half acre of *Leucaena* on every farm in Tanzania would supply 17 million cubic meters of firewood—more than half the amount consumed in Tanzania in 1980. Three- to eight-year-old *Leucaena* trees annually yield from 24 to more than 100 cubic meters of wood per hectare, with the average being between 30 and 40 cubic meters per hectare. (Nat. Acad. Sci., 1977)

One acre of *Leucaena* trees could produce enough charcoal to yield the energy equivalent of nearly 17 barrels of oil (Nat. Acad, Sci., 1977).[15] With 1.12 million acres (one-half acre for each farm in Tanzania; 455,000 total hectares; 1.1 percent of Tanzania's forest and woodland) planted in *Leucaena* and devoted to charcoal production, Tanzania could annually produce the energy equivalent of 18.7 million barrels of oil—worth, at 1983 oil prices, Tsh. 5.6 billion ($564 million).[16] As dry wood, a similar planting of *Leucaena* would yield the equivalent of 27 million barrels of oil annually, worth Tsh. 8.1 billion ($810 million). (Nat. Acad. Sci., 1977)[17]

Besides fixing nitrogen in the soil and being used for firewood or charcoal, the nitrogen-rich leaves (5 percent nitrogen) from this remarkable tree can be used for animal feed, composting or for direct application to the soil. One-half acre (.2 ha) of *Leucaena* could produce 2.5 to 5 tons of edible dry matter each year. (Nat. Acad. Sci., 1977) This is 14 to 250 kilograms of nitrogen each year that can be used for composting—more than enough to meet the total nitrogen requirement for the average Tanzanian farm.

Used as animal feed, this amount of leaves is equivalent to an annual production of 400 to 2,100 pounds of protein. At 2.5 tons per acre, 2.8 million tons of high-protein forage would be produced each year if each farm planted one-half acre of *Leucaena*. Interplanted with guinea grass (at 1-to-1 ratio), *Leucaena* pastures can carry up to one cow per acre or two to three cows per hectare in favorable conditions. The 330,000 metric tons of beef that could be produced on such an arrangement would be worth about Tsh. 5 billion at 1982 official producer prices. (USDA, 1979; United Rep. of Tanz., 1982b)[18]

Adding together the value of the fixed soil nitrogen, the firewood, the mean value of the nitrogen in the leaves, and the forage crop value of planting 1.125 million acres of *Leucaena* (one-half acre each on Tanzania's 2.25 million farms) would result in an estimated Tsh. 18 billion ($1.8 billion) increase in Tanzania's total economy. This is Tsh. 8,000 ($800) per farm.[19] Given the estimated time required to plant, maintain and trim these trees, the average farm would earn about Tsh. 66 ($6.00) per hour for its efforts.[20] Average yearly income would increase by 134 percent—from $536 to $1,256.[21]

---

[12] At the rate of 110 kg/ha of N fixed annually, ½ acre would fix 55 lbs. 55 lbs. × 2.25 × 10^6 farms = 56,250 MT.

[13] 56,000 MT ÷ 22,041 MT = 22.5%.
56,000 MT ÷ 91,900 MT = 60%.

[14] 56,250,000 kg × $1/kg (the 1983 import parity price of N in the form of sulphate of ammonia) = Tsh. 560 × 10^6 ($56,250).

[15] *L. leucocephala* charcoal has fuel value of 7,250 calories per kg or 12,980 BTU per lb. Charcoal has a weight of 15 lbs. per cubic foot. Fifteen lbs. per cubic ft. × 500 $ft.^3$ per acre (average amount *L. leucocephala* wood yield) = 7,500 lbs. per acre with a fuel value of 97.35 × 10^6 BTUs. One barrel of oil (42 gallons) yields 5.8 × 10^6 BTU. Therefore, 1 acre of *L. leucocephala* charcoal could yield enough energy to equal 16.8 barrels of oil annually.

[16] 1.12 × 10^6 acres × 16.8 barrels of oil = 18.8 × 10^6 barrels of oil. At $30 per barrel, 18.8 × 10^6 barrels are worth $564 × 10^6 or Tsh. 5.6 billion.

[17] *L. leucocephala* dry wood has a fuel value of 3,895 cal. per kg or 6,970 BTU per lb. One cubic foot of dry hardwood weighs 40 lbs. Forty lbs. × 500 $ft.^3$ per acre = 20,000 lbs. per acre with a fuel value of 139.4 × 10^6 BTU. 139.4 × 10^6 BTU = 24 barrels of oil. Twenty-four barrels of oil x 1.12 x 10^6 acres = 27 x 10^6 barrels of oil. $30 × 27 × 10^6 barrels = Tsh. 8.1 billion ($810 × 10^6).

[18] Assuming a liveweight of 1,000 lbs. per cow, the conversion of liveweight to dressed weight is .591 × 1,000 lbs. = 591 lbs. per cow. 1.125 × 10^6 cattle × 591 lbs. = 664.8 × 10^6 lbs. or 332.4 × 10^6 kg dressed weight. The producer price of beef with bones in April 1982 was approximately Tsh. 15 per kg. Tsh. 15 × 332.4 × 10^6 = Tsh. 4.986 billion.

[19] Tsh. 18 billion ÷ 2.25 million farms = Tsh. 8,000 ($800)

[20] Assuming 120 hrs./yr. is required to plant, maintain and trim these trees, Tsh. 8,000 per farm ÷ 120 hrs. = Tsh. 66.00 per hour or $6.00 per hour would be earned per farm.

[21] Tsh. 11,593,800,000 (value of food crops produced in 1981 [see Chart 5] at 1981/82 producer prices) ÷ 2.25 million farms = Tsh. 5,152.8 ($536). $536 plus $720 per farm equals $1,256. $1,256 is 134% of $536.
450,000 MT × 100% = 450,000 MT.
Tsh. 1.75 × 450,000 kg = Tsh. × 10^6 ($81.9 × 10^6).

Clearly, not all the costs are borne by the same group, nor are all the benefits quantifiable. But taking the two major costs and benefits—that of the tool costs of $187 million to $200 million, and the increased production benefits of $601 million—we find a payback on investment occurring in about six months. Such an astonishingly positive figure should not be used, though, to mask the real difficulties of achieving nitrogen self-sufficiency in Tanzania.

Summary/Conclusion

As all the reports in this series illustrate, the use of organic materials to meet part of Tanzania's nitrogen fertilizer needs is technologically possible, ecologically sensible, economically viable and socially advantageous.

Going in the other direction—away from meeting Tanzania's nitrogen needs from indigenous organic materials—would be a serious mistake. And attempting to develop a "commercial agriculture which tends to minimize the direct use of labor on the land," as some have recommended, (The Futures Group, 1983) could have serious negative impacts on Tanzania.

Rather than a step forward to a so-called "modernization" of Tanzania's agricultural system, such a move could be a step backward into mass unemployment, fiscal bankruptcy and social chaos. Instead of emulating the past of Western food production technology, Tanzania would be better off adopting the agricultural technology of the future—namely, an information-intensive, resource- and job-conserving, low-input, "regenerative" food system.

If Tanzania had a farming system similar to that of the United States, more than 15 million people presently living on farms would be displaced and forced to migrate to the cities.[22] More than 4 million presently employed Tanzanian farmworkers would be unemployed. (Chain Store Age/Supermarkets, 1982)[23] The machinery, fuel, fertilizer and pesticide costs would be so high that they could financially cripple the country in a matter of weeks. For example, U.S. maize production requires 209 gallons of oil equivalent per hectare per year. This is more than 6.46 million barrels of oil equivalent for Tanzania. The U.S. food system uses close to 500 gallons of oil equivalent per person per year. For Tanzania, this would be more than 9 billion gallons per year, or more than $6.5 billion worth. (Pimentel, 1981)[24]

Local industries employing local people to manufacture tools for use by Tanzanian farmers makes good economic and social sense. The job-conserving tendency of regenerative agriculture and the composting of organic material will help keep Tanzania's food system healthy, better able to absorb new workers, and in the forefront of new agricultural systems. In short, instead of repeating some of the major mistakes of a bygone, intense resource-consuming era, Tanzania can be on the bold cutting edge of the new agriculture that will be increasingly practiced throughout the world.

The advantages of meeting Tanzania's nitrogen needs from indigenous organic materials would seem to warrant the expenditures needed to implement a nitrogen self-sufficiency program in the country.

Given the overall prospects for fitting within many of the national development goals of Tanzania—those of raising the standard of living; achieving national self-reliance; emphasizing forms of economic activity which encourage collective and cooperative effort; making proper and efficient use of natural resources; and organizing projects which, while ensuring permanent and efficient development of the economy, may be implemented in a relatively short time—it would seem that a national, regenerative agricultural program is highly desirable.

Limits of Study

The preceding pages deal with the problem of nitrogen fertilizer availability on the national level. Lost in dealing with the problem at this scale are the differences that appear when separate regions are examined.

For example, at the national level, we looked at the total number of animals in Tanzania. This provided us with the amount of manure available for composting and for use on Tanzania's crops.

---

[22] In the United States in 1981 (latest FAO figures), 2.1% of the economically active population was in agriculture. A rate of 2.1% applied to Tanzania's economically active population in 1981 is 157,626 total number of farmers employed instead of its actual number of 6,037,000 employed farmers in 1981. 6,037,000 employed farmers minus 157,626 farmers remaining employed as farmers equals 5,879,374 displaced farmers. This number of farmers plus their families would total nearly 15 million people.

[23] Today, one out of every four persons employed in the U.S. are employed in the food system. Applying this rate to Tanzania, 1,718,874 persons out of the 5,879,374 displaced farmers might be expected to find jobs in the food system other than farming. This still leaves a total of 4,160,500 farmers displaced who would be unemployed.

[24] 95 gallons of oil equivalent per acre per year for corn production in U.S. = 209 gallons of oil equivalent per hectare per year. Area of maize harvested inTanzania in 1981 was 1.3 million ha. 1.3 million ha × 209 gallons of oil equivalent = 271.7 million gallons ÷ 42 = 6.47 million barrels of oil equivalent for Tanzanian maize production. 493 gallons of oil equivalent per person per year × 18.51 million persons equals 9.1205 billion gallons per year. At $30 per barrel (42 gallons), this is worth $6.5 billion.

One problem with this is the possibility that the animals could be concentrated in one area, or that animal raising and farming are not conducted by the same groups of people. Both of these situations can be found in Tanzania. For example, Kagera needs about 1,500 MT of manure to meet its nitrogen needs, and it has about 2,000 MT of nitrogen available, assuming 50 percent of the animals are confined 50 percent of the time, and 75 percent of this manure is collected for composting (see Charts 6 and 7). On the other hand, Arusha, Lindi, Mtwara and Ruvuma are short in available nitrogen and cattle manure.

Arusha needs about 10,680 MT, but only has about 8,360 MT available. Increasing the rate of collection to 60 percent brings the nitrogen availability from cattle manure up to 12,000 MT in Arusha. In other words, by a more aggressive collection pattern, Arusha's nitrogen needs can be met from just composting cattle manure.

Ruvuma, though, is another story. It needs more than 13,000 MT of nitrogen but only has 162 MT available from cattle manure. Even changing the rate of collection to an impossible 100 percent only produces about 1,000 MT of nitrogen. Possible options to this nitrogen shortage include using manure from other animals in Ruvuma, adding more cattle to the district, growing nitrogen-producing tree crops (10,000 to 20,000 hectares of *Leucaena* would produce over 13,000 MT of nitrogen in just leaves), composting other organic materials, and growing green manures.

Chart 6: **Comparison of Nitrogen Production and Requirements for Four Regions of Tanzania.**

	Needs*	Has
Arusha	10,680 MT	8,363 MT
West Lake	1,488 MT	1,954 MT
Ruvuma	13,253 MT	162 MT
Tabora	11,243 MT	4,283 MT

*Nitrogen requirements were determined by multiplying the *average* per hectare recommendations of nitrogen given for all 20 agroecological zones in Tanzania for maize, rice, wheat, sorghum and millet by the area harvested for each of the five crops within each region. Regional production figures for 1977/78 were divided by 1979 national average yields by crop in order to determine area harvested.

Source: Samki, 1982; Berry *et al.*, 1982, FAO, 1981

Chart 7: **Estimated Manure and Nitrogen Production Per Year in Four Regions of Tanzania for Cattle.**

Region	Kg Manure Produced Per Day by Cattle	Kg Per Year Per Animal	Total Number of Cattle (millions)	Number of Mature Animals (millions)	Total Manure Production/Yr. (million MT)
Arusha	13	4,745	2.161	1.652	7.838
Kagera	13	4,745	.507	.387	1.836
Ruvuma	13	4,745	.044	.033	.156
Tabora	13	4,745	1.108	.847	4.019

Region	Kg N Per Cow Per Year	50% of no. of Mature Cattle (millions)	N Produced from 50% of animals confined 50% of the time (MT)	Net N available with 75% recovery rate. (MT)
Arusha	27	.826	11,151	8,363
		.991 (60%)	16,057 (60%)	12,043
Kagera	27	.193	2,605	1,954
Ruvuma	27	.016	216	162
Tabora	27	.423	5,710	4,283

Source: ASAE, 1976; MWPS, 1979; Kyomo and Chagula, 1983.

REFERENCES

ASAE. 1976. Agricultural engineer's yearbook. D384. American Society of Agricultural Engineers, St. Joseph, Mich.

Anonymous. 1953. Crop responses to fertilizers and manures in East Africa. E. Afr. Agric. For. J. 19:19-28.

Berry, L., O. Mascarenhas and S. Steward. 1982. East Africa country profiles: Tanzania. Clark Univ., Worcester, Mass. p. 105, 110.

Chain Store Age/Supermarkets. 1982. 58(6):12.

Doughty, J. 1979. Decreasing variety of plant foods used in developing countries. Qualitas Plantarum. July 6:163-175.

Food and Agriculture Organization of the United Nations, The. 1981. 1980 FAO fertilizer yearbook. Vol. 30. FAO, Rome.

Futures Group, The. 1983. The United Republic of Tanzania: population and development. Washington, D.C. p. 46.

Grimes, R. C. and R. T. Clarke. 1962. Continuous cropping with the use of manure and fertilizers. E. Afr. Agric. For. J. 28:74-80.

Hogberg, P. and M. Kvarnstrom. 1982. Nitrogen fixation by the woody legume *Leucaena leucocephala* in Tanzania. Plant and Soil. 66:21-28.

Kock, W. 1982. Principles and technologies of sustainable agriculture in tropical areas: a preliminary assessment. Draft copy. The World Bank, Washington, D.C.

Kyomo, M. L. and A. Chagula. 1983. Role of livestock in organic farming. Presented at Workshop on Resource-Efficient Farming Methods for Tanzania. Morogoro, Tanzania. May 16-20, 1983.

Liebhardt, W. C. 1981. A low fertilizer use approach to increasing tropical food production. Paper #6. *In* Background papers for innovative biological technologies for lesser developed countries. Office of Technology Workshop, Washington, D.C. November 24-25, 1980. p. 285-287.

Lockeretz, W., G. Shearer, S. Sweeney, G. Kuepper, D. Wanner and D. H. Kohl. 1980. Maize yields and soil nutrient levels with and without pesticides and standard commercial fertilizers. Agron. J. 72:65-72.

MWPS. 1979. Livestock waste facilities handbook. Midwest Plan Service, Ames, Iowa.

National Academy of Sciences. 1977. *Leucaena:* promising forage and tree crop for the Tropics. Washington, D.C. p. 40-41.

Oelhaf, R. C. 1978. Organic agriculture: economic and ecological comparisons with conventional methods. Allanheld, Osmun & Co., Montclair, N.J. 271 p.

Pimentel, D. 1981. Opinion. Bioscience. December:791.

Samki, J. K. 1982. Fertilizer recommendations related to ecological zones in Tanzania. National Soil Service, Ministry of Agriculture, Mlingano, Tanga.

Spurling, A. 1982. Problems of fertilizer distribution. Unpublished paper. Prepared in support of The World Bank's Tanzania Agricultural Sector Report. #4052-TA. p. 5.

Steffen, R. 1979. The value of composted organic matter in building soil fertility. Comp. Sci./Land Util. 20(5):34-37.

United Republic of Tanzania. 1982a. National food strategy report. Ministry of Agriculture.

_____. 1982b. Monthly market bulletin: April. Ministry of Agriculture, Marketing Information Service, Dar es Salaam, Tanzania. p. 7.

United States Department of Agriculture. 1979. Conversion factors and weights and measures. USDA, ESCS, Statistical bulletin #616. U.S. Government Printing Office, Washington, D.C. p. 16.

Van Vuren, J. P. J. (no date). Soil fertility and sewage. Dover Publications, N.Y. p.130.

World Bank, The. 1982. Agricultural sector report on Tanzania. Report #4052-TA. Washington, D.C. p. 130.

PROGRAM OF ACTION FOR THE IMPLEMENTATION OF RESOURCE-EFFICIENT FARMING METHODS IN TANZANIA

August 11, 1983

I. Introduction

The most limiting nutrient in agricultural production in Tanzania and other developing countries is nitrogen. Therefore, emphasis will be put on measures to increase the supply of this nutrient. The program will include several technologies which interact to influence efficient nitrogen production and use. The resources available for this endeavor are manure and compost from different sources; compost materials; and grain, herbaceous and tree legumes. Utilization of these materials will be considered singly and in combinations, at different rates, and will form the basis for this plan of action.

II. Organizational Structure For Implementation

There should be a system for supervising the implementation program from the village up to the national level. The following committees are proposed:

A. Village Implementation Committee. Membership includes:

Village Chairman

Village Secretary

Village Manager

Village Livestock Officer

Village Education Coordinator

Village Cooperative Officer

Primary School Head Teacher(s)

B. Regional and District Implementation Committees. At these levels, the programs will be drawn and supervised by the Regional and District Development Committees, respectively.

C. National Interministerial/Interorganizational Advisory Committee, to provide broad guidelines on the implementation of the program.

Membership—Prime Minister's Office:

Ministry of Agriculture

Ministry of Livestock

Ministry of Natural Resources

Ministry of Industries

Ministry of National Education

Ministry of Lands

CCM, UWT, Cooperatives, Youth, TARO, TALIRO, University, CAMERTEC, Uyole Agricultural Center

III. Specific Recommendations For Field Implementation

It would be appropriate to divide the regions into three categories for field implementation on the following basis:

A. Regions with medium population and an abundant supply of manure. These include Mwanza, Mara, Shinyanga, Tabora, Singida, Arusha, Dodoma and Mbeya.

1. Emphasis in these areas should be on using the large amount of manure available. Manure should be removed from the kraal every two to four days, piled outside, and mixed with other available organic materials. The pile should then be covered with a bit of soil to reduce volatilization. Emphasis is also on efficient composting, better placing of manure outlet to allow easy collection, and providing carts to transport manure.

2. Discourage burning of organic materials.

3. Encourage on-farm planting (initially as hedge) of leguminous trees like *Leucaena* spp. to provide compost material, fodder and firewood.

4. It is recommended that Mwanza and Singida be earmarked for intensive implementation of the program initially.

B. Regions with high population and little manure. Includes Kilimanjaro, Dar es Salaam, Kagera and parts of Arusha and Mbeya.

1. Emphasis on better manure handling, efficient composting, better placing of manure for easy collection, and providing carts to transport manure.

2. Introduce tree legumes, especially in lower areas.

3. Underseeding programs with herbaceous legumes on coffee and/or banana farms.

4. It is recommended that Kilimanjaro be earmarked for initial intensive implementation of the program.

C. Regions with low population and little manure. Includes Lindi, Ruvuma, Mtwara, Rukwa, Morogoro, Iringa, Kigoma, Tanga and Coast.

1. Emphasis on efficient use of the small amount of compost and manure available.

2. Appropriate intercropping, such as legume/cereal combinations.

3. On-farm planting (as hedge) of tree legumes like *Leucaena* spp. for fodder, compost material and firewood.

4. Appropriate crop rotation.

IV. Additional Research Needs

A. Improved methods for handling and using manure and compost. Experience can come from areas in Tanzania already using these materials, like Kilimanjaro.

B. Crop responses in the field to various types and rates of manures and compost, and combinations of these with inorganic fertilizers.

C. Studies on annual decay rates using biological and chemical methods.

D. Studies on combinations of compost, manures and crop rotation.

E. Developing information on nutrients besides nitrogen, especially P and K.

F. Screening different varieties of *Leucaena*, including the Australian low-mimosine types, and other tree legumes like *Acacia*, *Glyricidia* and *Albizia* for adaptability to different ecological zones. Also, appropriate intercropping methods to minimize shading effects. Expert assistance will be obtained from Australia, IITA, Hawaii, the Philippines and other areas where *Leucaena* is grown and used successfully. Arrangements should be made for local experts on *Leucaena* to visit such areas to expand their knowledge. USAID has agreed that this technical assistance and training can be provided under a Farming Systems Research Project.

G. Evaluation of the effects of herbaceous legumes like crotalaria and lupines on weed control, and their role as undersown green manures. Studies on their content of toxins should also be made. Crotalaria is recommended for low to medium altitudes, lupines for medium to high altitudes. Draw on the experience of Tanzania farmers, such as Mission farmers (especially Peramiho).

H. Studies on biological nitrogen fixation by legumes, and development of local rhizobial inocula.

I. Further studies on appropriate intercropping patterns and plant populations, particularly using legumes to provide nitrogen.

J. Research like the Rodale Conversion Project, involving a comparison between resource-conserving regenerative methods, and high-input conventional methods of crop production.

K. Studies on botanical insecticides and other insect and plant disease control methods using indigenous materials and practices.

Training and Publicity

The Center for Continuing Education at Morogoro will be the focal point for preparing trainers in the country for efficient farming methods. The first week-long training program will be held in October for DADOs (12), MATI/LITI (eight of the MATIs and LITIs in the regions of interest), and trainers for the six priority regions selected for the program. A similar program will run in January 1984.

Within the first year, three MATIs and one LITI will hold two one-week training programs for 40 workers each to a total of 320 participants from CCM leader, UWT, Youth and Extension workers. The remaining Extension workers in the region will be given a two-day training program by the DADO, whereby all Extension workers in the six priority regions are trained in manure handling, composting, use of tree and crop legumes and interplanting.

The Extension workers would then conduct one-day sessions in each of the villages in the region so that all farmers receive this training. Additional sessions will be planned at Morogoro so that all DADOs and LIDOs, some MATI and LITI instructors, and agricultural teachers at Folk Development Colleges and other secondary schools receive training within the first two years of this program. Likewise, all Extension workers will be

given either one week of training at the MATIs or LITIs, or two days of training in the Districts during this time frame. This should ensure that most villagers or farmers in the country receive at least a one-day training session within two years. Additional details of these training programs, along with the required budget, are provided in the financial plan.

The pamphlets, posters and flip charts will be important training and publicity aids. All people trained at Morogoro will receive flip charts for use in training Extension workers in either the District or MATI/LITI. The five sets of posters would be available to Extension workers for use in training farmers, and for permanent display in either the village office or the school. The brochures also would be available to Extension workers for the village training programs, and extra copies would be made available as permanent reading and training material in each village office and schools.

Rodale Press will provide the training and publicity aids, as well as assistance in conducting the first training programs. Furthermore, while priority will be given to only six regions the first year, remaining regions will be covered in the second year. Also, posters and brochures will be made available to other regions, and radio broadcasts will be used to explain the Resource-Efficient Farming Methods program to Tanzania's farmers.

Program Coordination

As indicated above, five different Ministries will be responsible for various aspects of the program. Since the main responsibility will be in the Ministry of Agriculture, a special Tanzania Program Coordinator will be chosen by this Ministry to coordinate the country-wide effort. This national coordinator will establish a small office and be responsible for the special budget used to implement this effort.

Rodale Press has agreed to help fund this coordinator, and provide training and technical backstopping in the future. Initially, Rodale would agree on the appointment of the individual, then provide him or her with travel and training costs for a month at Rodale to learn the workings of resource-efficient farming methods. Rodale Press will also supply a special stipend to this person for the initial two-year program, and provide continual backstopping to the individual and the program throughout the initial two-year effort. Rodale will also supply a vehicle and other miscellaneous items. The Tanzanian government will provide funds to establish the coordinator's office, including salary, transportation and local operating costs.

Publications

During the first year, various brochures, posters, flip charts and other publications for in-country training will be produced by Rodale. Initially, five different brochures will be published (10,000 copies of each) on the following: 1) *Leucaena* production, 2) composting, 3) green manure, 4) interplanting, and 5) manure handling. Also, 2,000 posters on each of these subjects will be developed to provide national publicity on the program. In the training program, 200 flip charts printed on oil-based cloth in Swahili and English will be prepared for the trainers. Additional publications will be provided in the second year, as agreed by USAID, Tanzanian government and Rodale, Ukulima wa Kisasa, and the Ministry of Agriculture. Radio will be used to publicize the program, and Party Leaders, Youth and UWT will help mobilize the masses.

Peace Corps Volunteers

The Tanzanian government is in the process of asking the U.S. government for Peace Corps volunteers to assist with research, Extension and training. At first, these volunteers will be placed in the same District where the Farming Systems Research Program is to be conducted. They will also be located in the three major research stations, and at the Ministries of Agriculture and Livestock Training Institutes.

Initially, 10 Districts, three research stations (TARO and TALIRO), and three of the MATIs and two LITIs will be programmed with two volunteers each, for a total of 36 volunteers. These volunteers will be provided over a two-year period if necessary, and will be trained at the Rodale Research Center in resource-efficient farming methods. They will work under the auspices of the Ministries of Agriculture and Livestock. At the research stations, the volunteers will work with TARO and TALIRO, conducting off-station research trials on resource-efficient farming methods. In the Districts, they will work for the District Agriculture and Livestock Officers in conducting demonstrations on resource-efficient farming methods, including fertilizer demonstrations when possible. At the MATIs and LITIs, they will work under the auspices of the Principal of the Institutes, both in training Extension workers and conducting on-farm demonstrations.

Appropriate Equipment

To develop compost and make better use of manure, more effective equipment will be needed by Tanzanian farmers. Farmers need forks to han-

dle manure, and carts to transport it. More extensive use of ox plows and wooden-handle hand tools will allow farmers to till more land, grow green manures and increase production.

Effective with this plan, the Tanzanian government, through the Ministries of Agriculture and Industry, will establish realistic but ambitious targets for production of various farm implements and hand tools. This plan will include the number and types of equipment, place of manufacture and other important data. The donor and/or foreign exchange requirements for producing and/or importing these items will be provided in detail. Personnel from the Ministries of Agriculture and Industry, and possibly TRDB, will prepare this plan.

CAMERTEC will also play an increasingly important role in importing and testing prototypes, and making designs available to local manufacturers. Increased efforts will be made to decrease the amount of steel and, thereby, foreign exchange needed to supply this equipment. Producing wooden rather than steel plow handles, and metal-rimmed wooden wheels instead of all-steel ones, are examples of where steel imports may be reduced. Efforts will also be made to obtain the assistance of companies like "Tru-Temper" in the U.S. to improve production of hand tools in Tanzania.

Resources for the Program

Funding and other resources needed to begin the Resource-Efficient Farming Methods program are being provided by the Tanzanian government, Rodale and USAID. Some local funding already is available through the budget of various Ministries. This applies especially to salaries and related costs of normal government staff, as well as some funding for training, steel for equipment and machinery and related costs.

A project proposal to cover additional costs for this program, estimated to be about Tsh. 10 million, has been prepared. The local shilling cost, not included in the regular budget, covers the additional costs of preparing Extension trainers in Morogoro, MATIs/LITIs and farmers; the cost of establishing the program coordinator's office; additional cost of establishing research trials at Morogoro and at the three major research stations; cost of establishing on-farm demonstrations in the major regions; and miscellaneous costs.

USAID will also provide funds under the Farming Systems Research Project to directly and indirectly support this program. Specifically, short-term consultancies will be funded on both tree and crop legumes, and for participants on these subjects. Additional technical support will be provided for research trials, demonstrations and related aspects of the Resource-Efficient Farming Methods program. USAID will also jointly fund some technical training consultants with Rodale Press and the Rodale Research Center by providing *per diem* and travel costs. The U.S. government has agreed to provide Peace Corps volunteers to help implement the program.

Rodale Press and the Rodale Research Center will help fund the coordinator of the program with the Tanzanian government, and provide training to the coordinator, to other Tanzanians, and to Peace Corps volunteers assigned both to the program and to related areas. Rodale will also pay for the technical assistance training consultant, who will help conduct the training program in Morogoro and other regions. Rodale Press also has agreed to provide brochures, posters, flip charts and a vehicle for the coordinator, as defined earlier in this plan.

1

1. Standard Tanzanian farm implements on display during field demonstrations. The array includes (from foreground) a cultivator, wheelbarrow, seed cleaner, plow, bullock cart and a rare working tractor.

2. Craftsman shows locally manufactured seed cleaner to President Nyerere (center).

3. Technicians from the University of Dar es Salaam drive equipment back from the fields after compost demonstration (compost piles at far right) and tours of test plots comparing organic and conventional farming.

4. President Nyerere points to wooden wheels that can help Tanzania reduce steel imports and become more self-sufficient.

5. Workers demonstrate ox-drawn plow.

6. Village craftsmen demonstrate hand-operated planter and fertilizer applicator.

2

3

4

5

6