The Hashemite Kingdom of Jordan
National Planning Council

PN-AAT-759
41976

FEASIBILITY STUDY

ZARQA – RUSEIFA

WATER DISTRIBUTION, SEWERAGE AND STORMWATER SYSTEMS

INDUSTRIAL EFFLUENTS TREATMENT REPORT

MALCOLM PIRNIE, INC.
in association with
JOUZY & PARTNERS

1980
Amman - Jordan

MALCOLM PIRNIE, INC. IN ASSOCIATION WITH JOUZY & PARTNERS
CONSULTING ENVIRONMENTAL ENGINEERS CONSULTING ENGINEERING BUREAU

TELEPHONE 62818 / 63902 TELEX 21381 JOUZY JO

P. O. BOX 9112 AMMAN - JORDAN

His Excellency President
Dr. Hanna Odeh
National Planning Council
P.O.Box 555
Amman - Jordan

December 22, 1980.

Re: Feasibility Studies of the Municipal Water Distribution Improvements and Sewerage and Stormwater Drainage Systems in Zarqa and Ruseifa, Jordan.

Dear Dr. Odeh,

In accordance with our Agreement, we are pleased to submit the Final Industrial Effluents Treatment Report.

The purpose of this report is to investigate and evaluate the industrial effluents discharged from the many industrial establishments within the Planning Area.

The Report determines which industries discharge effluents which would be deleterious to the proposed wastewater treatment plant and recommends what type of pretreatment or individual treatment will be required to provide an effluent acceptable for the treatment plant or for discharge directly to a waterway.

The recommendations are summarized in Table 1-5.1.

We wish to thank the NPC staff, Ministry of Trade and Industries, Municipalities of Zarqa and Ruseifa, the Royal Scientific Society, the industries, and the many others who have assisted us during this project.

Respectfully Submitted,

Martin P. Daly
Resident Project Manager
Malcolm Pirnie, Inc.

Najeeb F. Tleel
Deputy Project Manager
Jouzy and Partners.

INDUSTRIAL EFFLUENTS TREATMENT REPORT

TABLE OF CONTENTS

CHAPTER	DESCRIPTION	PAGE
	TABLE OF CONTENTS	i
	LIST OF TABLES	ii
	LIST OF FIGURES	iv
	LIST OF APPENDICES	v
1.0	INTRODUCTION	1-1
	1.1 Background	1-1
	1.2 Report Organization	1-2
	1.3 Authorization	1-2
	1.4 Purpose and Objective	1-2
	1.5 Scope of Work	1-2
2.0	EXISTING INDUSTRIAL SETTING	2-1
	2.1 General Description of Planning Area	2-1
	2.2 Water Use and Wastewater Flow	2-2
	2.3 Raw Waste Loads	2-3
	2.4 Wastewater Characterization	2-4
	2.5 Detailed Description of Each Industry	2-6
3.0	PROJECTED INDUSTRIAL SETTING	3-1
	3.1 Anticipated Growth	3-1
	3.2 Conservation Measures	3-2
	3.3 Discussion By Specific Industry	3-5
4.0	ALTERNATIVE APPROACHES TO INDUSTRIAL WASTEWATER MANAGEMENT	4-1
	4.1 Strategies	4-1
	4.2 Individual Pretreatment	4-5
	4.3 Localized Pretreatment	4-18
	4.4 Individual Treatment/Disposal	4-21
	4.5 Analysis Of Alternatives	4-28

3

INDUSTRIAL EFFLUENTS TREATMENT REPORT

TABLE OF CONTENTS (Cont'd)

CHAPTER	DESCRIPTION	PAGE
5.0	RECOMMENDED INDUSTRIAL TREATMENT/PRETREATMENT STRATEGY	5-1
	5.1 Recommended System	5-1
	5.2 Implementation	5-1
	5.3 Special Groundwater Considerations	5-3
-	REFERENCES	-

LIST OF TABLES

TABLE NUMBER	DESCRIPTION	FOLLOWING PAGE
I-2.1	Industrial Employment Summary	2-1
I-2.2	Present Average Daily Industrial Water Use and Wastewater Flow	2-2
I-2.3	Summary of Present Industrial Raw Waste Loads	2-3
I-3.1	Projected Average Daily Industrial Water Demand and Wastewater Flow	3-2
I-3.2	Summary of Projected Industrial Raw Waste Loads	3-2
I-4.1	Summary of Industrial Pretreatment Candidates and Pretreatment Processes Investigated	4-6
I-4.2	Industrial Operations Summary and Estimated Flow Variability	4-6
I-4.3	Equalization Tank Sizing - Individual Pretreatment	4-13
I-4.4	Capital Cost Estimates-Individual Pretreatment	4-18
I-4.5	Annual Operating Cost Estimates - Individual Pretreatment	4-18
I-4.6	Equalization Tank Sizing - Localized Pretreatment	4-20

INDUSTRIAL EFFLUENTS TREATMENT REPORT

LIST OF TABLES (Cont'd)

TABLE NUMBER	DESCRIPTION	FOLLOWING PAGE
I-4.7	Capital and Annual Operating Cost Estimates - Localized Pretreatment	4-21
I-4.8	Summary of Industries with Potential for Independent Treatment and Treatment Processes Investigated	4-21
I-4.9	Capital Cost Estimates- Individual Treatment and Disposal	4-28
I-4.10	Annual Operating Cost Estimates - Individual Treatment and Disposal	4-28
I-4.11	Present Worth Analysis - Individual Pretreatment Process Options	4-28
I-4.12	Present Worth Analysis - Individual vs Localized Pretreatment	4-29
I-4.13	Present Worth Analysis - Individual Treatment/Disposal vs Combined Industrial-Municipal Treatment (W/Pretreatment where Appropriate)	4-30
I-5.1	Summary of Recommended Treatment/ Pretreatment Strategy by Industry	5-1
I-5.2	Summary of Projected Industrial Wastewater Flows and Waste Loads to Combined Industrial Municipal Treatment	5-1

6

INDUSTRIAL EFFLUENTS TREATMENT REPORT

LIST OF FIGURES

FIGURE NUMBER	DESCRIPTION	FOLLOWING PAGE
I-2.1	Industrial Location Map	2-1
I-2.2	Process Flow Diagram Soap Factory	2-10
I-2.3	Jordan Tanning Company Wastewater Flow Schematic	2-18
I-2.4	Waste Paper Board Mill Generalized Process Flow Diagram	2-18
I-2.5	Generalized Straw Pulp Process Flow Diagram	2-19
I-2.6	Mercury Cell Chlor-Alkali Process Flow Diagram for Jordan Distilled Chemical Co.	2-21
I-4.1	Sewage Flow Pattern at Amman Sewage Treatment Plant	4-6

INDUSTRIAL EFFLUENTS TREATMENT REPORT

LIST OF APPENDICIES

A.1 INDUSTRIAL QUESTIONAIRES

A.2 SUMMARY OF INDUSTRIAL WASTEWATER CHARACTERISTICS

Table I-A.2.1	Industrial Wastewater Characteristics
Table I-A.2.2	Results of Industrial Wastewater Sampling Program
Table I-A.2.3	Summary of Industrial Field Investigations
Table I-A.2.4	Characterization of Jordan Paper and Cardboard Co. Process Wastewaters
Table I-A.2.5	Characterization of Jordan Refinery Process Wastewater

A.3 SAMPLE STANDARDS FOR DISCHARGE INTO THE SEWERS OF ZARQA-RUSEIFA JOINT SEWERAGE AGENCY

1.0 INTRODUCTION

1.1 BACKGROUND

The Municipalities of Zarqa and Ruseifa are located about 20 km northeast of Amman. The area has a total population of about 278,000.

The area is a major industrial center with many of the larger industries in Jordan located there. Major industrial categories represented include: phosphate mining and beneficiation; alcoholic and non-alcoholic beverage production; leather tanning and finishing; textiles; steel fabrication; pulp and paper production; soap and detergent manufacture; dairy products; and inorganic chemical manufacture.

At present, neither municipality has a sanitary sewerage system for either municipal or industrial wastewaters. Hence, the industries are disposing of the wastewaters in a variety of methods ranging from direct discharge into adjacent watercourses to cesspools to seepage/evaporation ponds to irrigation on adjacent properties. In all of these cases, no treatment other than simple sedimentation is practiced with the wastewater entering surface watercourses and/or the groundwater in an untreated state. This study was undertaken with the intention of remedying this serious health and environmental problem by construction of a combined industrial-municipal sewerage system.

Available information indicated that potentially significant industrial wastewater discharges could be expected to occur in the area. The discharges might be significant for one or more of the following reasons:

- average or peak flows of sufficient magnitude to affect sewer and treatment unit sizing
- presence of large quantities of oxygen-demanding wastewater constituents which affect treatment process selection and treatment unit sizing
- presence of potentially toxic wastewater constituents which may pass through or interfere with sewerage system operation or sludge disposal
- presence of large quantities of conventional or nontoxic wastewater constituents which may interfere with sewerage system operation

4

1.2 REPORT ORGANIZATION

This report is one of five volumes which comprise a Feasibility Study for the Water Distribution, Sewerage, and Stormwater Systems Improvements. The five volumes are as follows:

1. Summary Report
2. Investigations, Preliminary Engineering Design, and Financial and Socio-Economic Analysis Report.
3. Industrial Effluents Treatment Report.
4. Appendix to the Investigations, Preliminary Engineering Design, and Financial and Socio-Economic Analysis Report.
5. Map Atlas for the Investigations, Preliminary Engineering Design, and Financial and Socio-Economic Analysis Report.

1.3 AUTHORIZATION

On January 6, 1980 an Agreement was signed between the National Planning Council of the Government of the Hashemite Kingdom of Jordan and Malcolm Pirnie, Inc. for the Feasibility Study described in Section 2.2. Jouzy & Partners is the Associate Consultant for this project.

The United States Department of State, Agency for International Development is paying all U.S. dollar costs of the Feasibility Study.

1.4 PURPOSE AND OBJECTIVE

The purpose of the Industrial Effluents Treatment Report is to investigate and evaluate the industrial effluents discharged from the many industrial establishments within the Planning Area.

The objective is to determine which industries discharge effluents which would be deleterious to the proposed wastewater treatment plant process and recommend what type of pretreatment or individual treatment would be required to provide an effluent acceptable for treatment at the proposed Zarqa-Ruseifa wastewater treatment plant or for discharge directly to a waterway.

1.5 SCOPE OF WORK

The scope of work includes the following:

- Inventory and on-site inspection of the existing industries
- Characterization of present flows and loads by a supplemental sampling and analysis program and comparison with similar industries

- Estimation of future wastewater flows and loads
- Evaluation of pretreatment requirements for discharge to the proposed wastewater treatment plant or directly to a watercourse
- Preparation of general outline specifications and order of magnitude cost estimates for each case or for combined pretreatment facilities as appropriate
- Recommendation of a pretreatment program for the Planning Area

10

2.0 EXISTING INDUSTRIAL SETTING

2.1 GENERAL DESCRIPTION OF PLANNING AREA

The Planning Area boundary and the location of the major industries within it are shown in Figure I-2.1. The Planning Area includes the Municipalities of Zarqa and Ruseifa and some adjoining areas. The total land area encompased by the Planning Area is approximately 4700 hectares and includes 43 major industries. As shown in Figure I-2.1, most of the existing industries are located in the central part of the Planning Area along the Zarqa River. The types of industries are diverse and span the spectrum from small, dry process industries such as Jordan Fiberglass Co. to large water consuming industries such as the phosphate beneficiation mill operated by the Jordan Phosphate Company. A summary of the major industrial categories represented and their employment levels is presented in Table I-2.1.

In general, the industries in the Planning Area can be characterized as predominantly secondary processing facilities. For example: raw materials for the textile mills are primarily pre-dyed yarns or bolt fabric; dairy products are almost exclusively from reconstituted (dry) milk; steel is produced from remelted scrap or billets; and paper is repulped from scrap. This is primarily due to the lack of natural resources in Jordan. Major exceptions are:

- phosphate mining and beneficiation
- chlor-alkali manufacture
- ceramic and tile industries
- leather tannery
- beverage industries

Industrial wastewater treatment practices can best be described as incidental or non-existent. Nearly all industries discharge raw industrial process wastewaters directly to the Zarqa River or one of its tributary wadis. Exceptions are the paper mill, phosphate beneficiation plant, and tannery which operate earthen wastewater impoundments. Several of the less intensive water-using industries such as the paint formulators and the match factory discharge their process wastewaters to cesspools either separately or combined with sanitary wastewater. Cesspools are nearly universal in their use throughout industry in the Planning Area for disposal of sanitary wastewater.

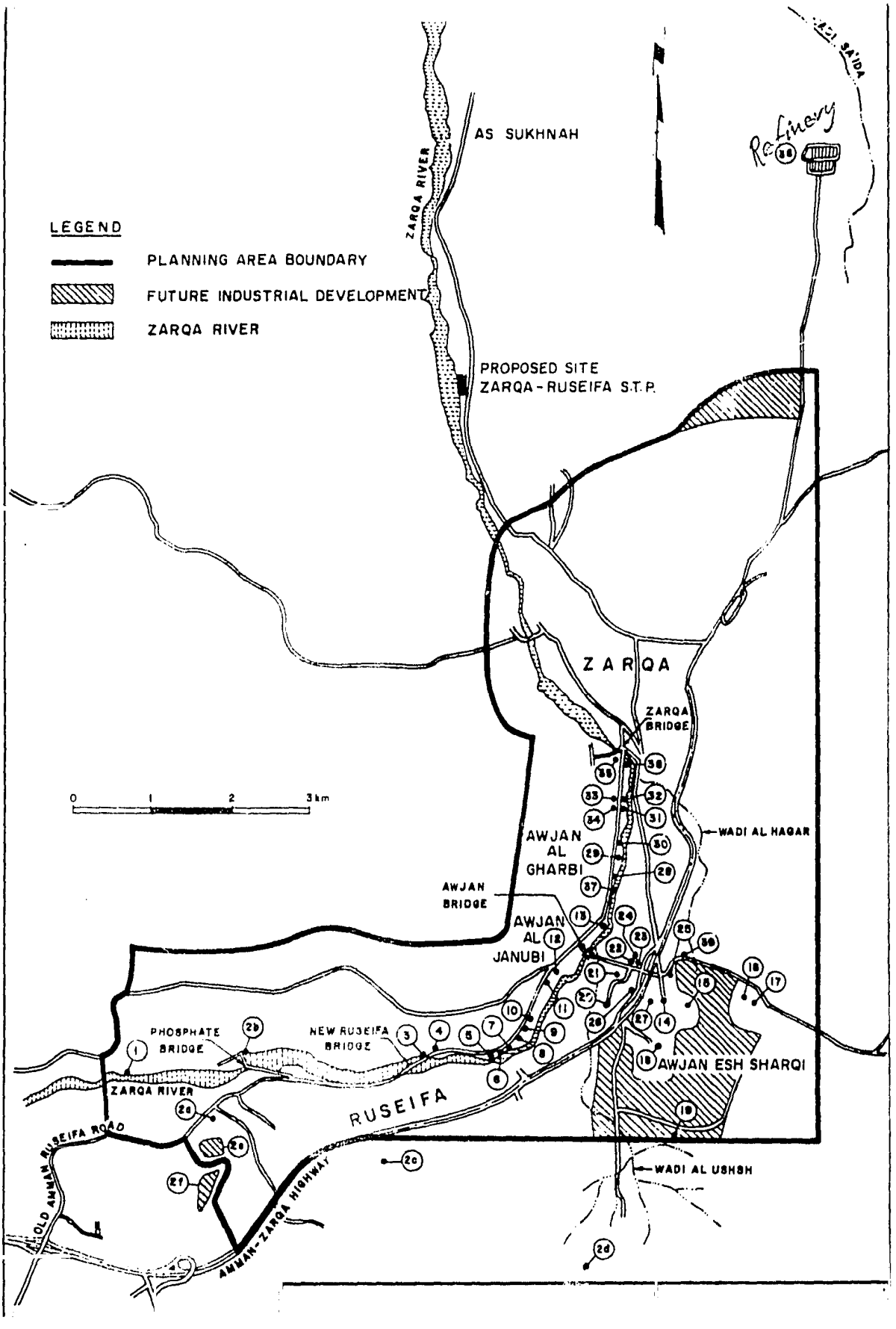
LEGEND
PLANNING AREA BOUNDARY
FUTURE INDUSTRIAL DEVELOPMENT
ZARQA RIVER
AS SUKHNAH
ZARQA RIVER
PROPOSED SITE
ZARQA - RUSEIFA S.T.P.
Refinery
ZARQA
ZARQA BRIDGE
WADI AL HAQAR
AWJAN AL GHARBI
AWJAN BRIDGE
AWJAN AL JANUBI
AWJAN ESH SHARQI
WADI AL USHSH
PHOSPHATE BRIDGE
NEW RUSEIFA BRIDGE
ZARQA RIVER
RUSEIFA
OLD AMMAN RUSEIFA ROAD
AMMAN-ZARQA HIGHWAY
0 1 2 3 km

TABLE I-2.1 INDUSTRIAL EMPLOYMENT SUMMARY

INDUSTRY	NUMBER OF EMPLOYEES
TEXTILES	
Jordan Worsted Mills	300
Cream Tex	20-25
Jordan Army Blanket Factory	200
Imperial Underwear Co.	60
BEVERAGE & FERMENTATION	
Yeast Industries Co.	22
Oriental Star Distillery	14
Oriental Mineral Water Factories	52
United Factories, Ltd.	7
Arab Breweries Co., Ltd.	50
Jordan Breweries Co., Ltd	70
Eagle Distilleries	80
DAIRY PRODUCTS	
ICA Ice Cream Factory	40-50
Jordan Dairy Co.	80
Zeidan Refrigeration Co.	20
PAINT FORMULATION	
ICA Paint Factory	20-25
Noralux Industrial Commercial Co.	8
Arab Thinner Factory	4
Jopolymer	20
Clenkers, Ltd.	12
SOAP AND DETERGENTS	
ICA Soap Factory	45
ICA Detergent Factory	45
LEATHER AND LEATHER PRODUCTS	
Jordan Tanning Co.	150-160
Int'l Leather Products	60
PAPER AND PAPERBOARD	
Jordan Paper and Cardboard C.	240
STEEL AND STEEL FABRICATION	
Jordan Iron and Steel Co.	265
Jordan Overall Co., Ltd.	125
PHOSPHATE MINING AND BENEFICIATION	
Jordan Phosphate Mines Co., Ltd.	823
CERAMIC AND TILES	
Transjordan Minerals Research	10
Jordan Tiles Co.	32
Jordan Ceramic Industries Co.	240
Jordan Ceramic and Firebrick Co.	36
INORGANIC CHEMICALS	
Jordan Distilled Chemical Industries (chlor-alkali manufacture)	60
MISCELLANEOUS	
ICA Cosmetics Factory (shampoo, toothpaste, shave creme)	32
Sultan Plastics Co. (thermoformed plastics)	30
Kolaghassi Foam and Mattress Factory (latex foam)	25
Jordan Electric Power Co - Abdali Power Station (warehouse)	35
Jordan Fiberglass Co.	13
Big Zarqa Mill (grain mill)	70
Jordan Industries and Match Co.	50

NOTE: ICA Indicates Hussein Industrial City

Most of the less water-intensive industries rely primarily on municipal supplies for water while the more water-intensive operate almost exclusively from private wells tapping the upper unconfined aquifer underlying the Planning Area. Some of the industries have been forced to use private wells because of an insufficient and/or undependable municipal water supply. Others have done so for economic purposes. Others yet use both municipal and private well water supplies as private well supplies are insufficient or of unsatisfactory quality. Many of the industries on private water supplies practice little or no water conservation as there are no economic advantages of doing so.

More detailed descriptions of processes, production, wastewater treatment and disposal practices employed by each of the major industries are presented in Sections 2.5.1 to 2.5.36 located at the end of this chapter. This information was acquired by on-site inspection of facilities and discussions with industry personnel. Detailed industrial waste survey questionaires were completed by each of the industries during these site visits. Abbreviated versions of these questionaires are included in Appendix A.1.

2.2 WATER USE AND WASTEWATER FLOW

Present industrial water use and wastewater flows are summarized in Table I-2.2.

The water use data presented in Table I-2.2 are based upon the following information sources:

- 1979 and 1980 water meter readings for those industries supplied by municipal water.
- Estimates by industry for unmetered private wells (only one industrial well is metered).
- Engineering estimates, where industry offered none. Estimates are based upon on-site inspection or U.S. average for similar facilities from the literature.

The wastewater flow data presented in Table I-2.2 are based upon the following sources of information:

- Water use data.
- Industry estimates.
- Engineering estimates, where industry offered none, or industry estimates appeared incorrect. Engineering estimates are based upon flow measurements made in the field or from the literature for the average of similar industries in the U.S.

TABLE I-2.2 PRESENT AVERAGE DAILY INDUSTRIAL WATER USE AND WASTEWATER FLOW

INDUSTRY	WATER USE (M3/DAY)			WASTEWATER FLOW (M3/DAY)				
	MUNICIPAL SUPPLY	PRIVATE WELL	TOTAL	CONSUMED IN PRODUCT	SANITARY DISCHARGE	PROCESS DISCHARGE	COOLING	TOTAL DISCHARGE
Ruseifa								
Yeast Industries Co.	0.02*	113++	113.02	-	0.02	112++	1.0++	113.
Phosphate Mill	-	1800+	1800	100	16	1680+	-	1696.
Oriental Star Distillery	0.5*	29+	29.5	0.3	0.2	8.2	21.0	29.
Hussein Industrial City								
Detergent Factory	-	48.0	48.0	9.0	1.0	38.0	-	39.
Soap Factory		504.9	504.9	-	0.9	312.0**	192.0	504.
Ice Cream Factory	-	30.0	30.0	5.4	1.0	4.0	19.6	24.
Cosmetics Factory	-	1.5	1.5	0.7	0.6	0.2	-	0.
Paint Factory	-	3.0	3.0	0.3	0.5	1.5	1.0	3.
Oriental Mineral Water Fact. (7-Up)	38.0*	58.0	96.0+	3.0	1.0	92.0	-	93.
Transjordan Mineral Research Co.	0.2*	4.0	4.2	4.0	0.2	-	-	0.
Jordan Overall Co.	1.5	12.0	13.5	-	1.5	12.0	-	13.
Jordan Dairy Co.	1.9*	250.0+	251.9	150.0	1.9	100.0	-	101.
Jordan Worsted Mills	-	93.0	93.0	-	6.0	87.0	-	93.
Sultan Plastic Co.	0.6*	-	0.6	-	0.6	-	-	0.
Subtotal	42.72	2946.4	2989.1	272.7	31.4	2446.9	234.6	2712.

* metered + industry estimate

** measured ++ MPI estimate

TABLE I-2.2 (CONT'D.) PRESENT AVERAGE DAILY INDUSTRIAL WATER USE AND WASTEWATER FLOW

INDUSTRY	WATER USE (M^3/DAY)			WASTEWATER FLOW (M^3/DAY)				
	MUNICIPAL SUPPLY	PRIVATE WELL	TOTAL	CONSUMED IN PRODUCT	SANITARY DISCHARGE	PROCESS DISCHARGE	COOLING	TOTAL DISCHARGE
Awjan al Janubi								
Noralux Ind. Com. Co.	2.3*	-	2.3	0.7	0.4	1.2	-	1.6
Kholaghassi Foam and Mattress	23.0*	-	23.0	22.5	0.5	-	-	0.5
Cream Tex	0.6*	9.0++	9.6	-	0.6	9.0	-	9.6
Subtotal	25.9	9.0	34.9	23.2	1.5	10.2	-	11.7
Awjan esh Sharqi								
Jordan Tanning Co., Ltd	-	650.0+	650.0	-	3.0	647.0	-	650.0
Jordan Paper & Cardboard	-	2130.0*	2130.0	193.0	5.0	1932.0	-	1937.0
Jordan Iron & Steel Co.	108.0*	1149.0**	1257.0	-	5.0	2.0++	1250.0**	1257.0
Jordan Ceramic Ind. Co.	-	80.0+	80.0+	50.0+	3.0+	27.0+	-	30.0
Jordan Match Co. (JIMCO)	-	8.0	8.0	1.0	1.0	6.0	-	7.0
Jordan Chemical Industries	0.2	80.0	80.0	39.+0	1.2++	40.0**	-	41.2
Jordan Army Blanket Fact.	0.2	150.0	150.2	-	4.0	146.0	-	150.0
Jordan Electric Power Co. Abdali Power Station	-	1.0	1.0	-	1.0	-	-	1.0
Arab Thinner Factory	0.8	-	0.8	-	0.8	-	-	0.8
Jopolymer	0.8	32.0	32.8	5.6	0.8	8.0	-	8.8
Clenkers, Ltd.	3.0*	-	3.0	0.8	0.20	6.0	-	6.2
Leather Product Co. Int'l	2.4++	-	2.4	-	2.4++	-	-	2.4

* metered

** measured

\+ industry estimate

++ MPI estimate

TABLE I-2.2 (CONT'D.) PRESENT AVERAGE DAILY INDUSTRIAL WATER USE AND WASTEWATER FLOW

INDUSTRY	WATER USE (M3/DAY)			WASTEWATER FLOW (M3/DAY)				
	MUNICIPAL SUPPLY	PRIVATE WELL	TOTAL	CONSUMED IN PRODUCT	SANITARY DISCHARGE	PROCESS DISCHARGE	COOLING	TOTAL DISCHARGE
Awjan esh Sharqi (Cont'd.)								
Jordan Fiberglass Co.	0.3	-	0.3		0.3	-	-	0.3
Jordan Tiles Co.	0.8	130.0	130.8	20.0	0.8	100.0	-	100.8
Subtotal	116.5	4410.0	4526.5	319.4	28.5	2914.0	1350	4192.5
Awjan al Charbi								
United Factories, Ltd	20.0++	20.0++	40.0+	-	0.14	36.0	-	36.14
Jordan Ceramic & Firebrick	8.0	-	8.0	7.3	0.7	-	-	0.7
Imperial Underwear Co.	4.1*	32.7+	36.8	5.6	1.2	30.0	-	31.2
Arab Breweries Co., Ltd.	141.0*	-	141.0	10.0	1.0	86.0	44.0	131.0
Jordan Breweries Co.,Ltd.	240.0*	-	240.0	16.0	1.4	222.6	-	224.0
Eagle Distilleries	70.5	141.0	211.5	2.0	1.6	154.9	53.0	209.5
Zeidan Refrigeration Co.	7.3	-	7.3	0.6	0.4	6.3	-	6.7
Big Zarqa Mill Co.	6.8*	-	6.8	5.4	1.4	-	-	1.4
Subtotal	490.4	193.7	684.1	43.2	7.4	535.8	97	640.2
TOTAL (Study Area)	676	7559	8235	667	69	5907	1582	7557

* metered + industry estimate

** measured ++ MPI estimate

The following observations can be made from examination of Table I-2.2:

1) Total industrial water use in the Planning Area is estimated to be approximately 8,235 m^3 per workday.

2) Municipal supplies presently account for only 8.2% of the industrial water demand, the rest coming from private wells.

3) Water-intensive industries are almost exclusively supplied by private wells. Exceptions are the breweries which use municipal water because of process water quality requirements.

4) Total industrial wastewater flow in the Planning Area is estimated at 7,557 m^3 per workday.

5) Cooling water accounts for approximately 20.9% of the total industrial wastewater flow.

2.3 RAW WASTE LOADS

A summary of estimated raw industrial waste loads is presented in Table I-2.3. Estimates of 5-day Biochemical Oxygen Demand (BOD_5) and Total Suspended Solids (TSS) are presented for each industry.

For industries with relatively uniform (batch or continuous) wastewater discharges and what was considered to be representative chemical analyses and flow data, average raw waste loads were calculated as follows:

$$Q_{ave}\ (m^3/day) \times \frac{C_{ave}\ (mg/l)}{1000} = L_{ave}\ (kg/day)$$

Where: Q_{ave} = average daily wastewater flow

C_{ave} = average pollutant concentration in raw wastewater

L_{ave} = average daily raw waste load

For industries with numerous discharges and/or variable wastewater characteristics, process literature was used to estimate the raw waste loads. In most cases, the estimated raw waste loads were based on average waste loads per unit production for similar facilities operating in the United States. As a check, all raw waste load estimates were compared against raw material usage as an upper limit.

Examination of Table I-2.3 indicates the following regarding raw waste load allocation:

1) Total industrial raw BOD_5 load is estimated to average approximately 5,068 kg per workday. Workday is accentuated because all but three of the industries operate 6 days per week with Fridays off. This total average industrial BOD_5 load is equivalent to approximately 84,500 population equivalents, assuming an average daily per capita BOD_5 contribution of 60g.

18

TABLE I-2.3 SUMMARY OF PRESENT INDUSTRIAL RAW WASTE LOADS

INDUSTRY	POLLUTANT LOAD					
	BOD_5		TSS		OTHER	
	Kg/Day	% Industrial Total	Kg/Day	% Industrial Total	Parameter	Kg/Day
Ruseifa						
Yeast Industries Co.	300	5.9	100	0.1	*	*
Jordan Phosphate Co.	*	*	252,000	97.0	*	*
Oriental Star Distillery	4.9	0.1	5.3	0.1	*	*
Hussein Industrial City						
Detergent Factory	1.3	0.02	1.3	0.1	*	*
Soap Factory	100	1.9	20	0.1	COD	5,250
					Oil & Grease	2.3
Ice Cream Factory	41	0.8	16	0.1	*	*
Cosmetics Factory	*	*	*	*	*	*
Paint Factory	*	*	4.5	0.1	Oil & Grease	0.02
Oriental Mineral Water Fact.	91	1.8	45	0.1	*	*
Jordan Overall Co.	*	*	*	*	Oil & Grease	3.3
					Fe	0.89
Jordan Dairy Co.	520	10.3	210	0.1	*	*
Jordan Worsted Mills	54	1.0	360	0.14	Oil & Grease	13
					Zn	0.023
Subtotal	1,112	21.9	252,763	97.3	*	*
Awjan al Janubi						
Noralux Ind. Comm. Co.	-	*	3.6	0.1	*	*
Cream Tex	5.3	0.1	1.7	0.1	*	*
Subtotal	5.3	0.1	5.3	.1	*	*
Awjan esh Sharqi						
Jordan Tanning Co.	710	14.0	860	.33	Oil & Grease	110
					Sulfide	260
					Cr (total)	30
Jordan Paper & Cardboard	420	8.3	5,100	2.0	*	*
Jordan Iron and Steel Co.	*	*	310	0.1	Oil & Grease	50
Jordan Match Co.	*	*	*	*	*	-
Jordan Chemical Ind.	*	*	290	0.1	NaCl	460
					Hg	0.60
Jordan Army Blanket	89	1.7	250	0.1	Cu	0.14
					Cr	0.21
					Zn	0.17
Jordan Polymer	*	*	*	*	*	*
Clenkers, Ltd.	*	*	18	0.1	*	*
Subtotal	1,219	24.0	6,828	2.6	*	*
Awjan al Gharbi						
United Factories, Ltd.	1,000	19.7	1.4	0.1	*	*
Imperial Underwear	18	0.3	5.7	0.1	Oil & Grease	68
					Cu	0.01
					Zn	0.007
Arab Breweries Co.	120	2.4	46	0.1	*	*
Jordan Brewery Co., Ltd.	190	3.7	77	0.1	*	*
Eagle Distilleries	1,400	27.6	17	0.1	*	*
Zeidan Refrigeration	4	.07	1.6	0.1	*	*
Subtotal	2,732	54	149	0.1	*	*
TOTAL (STUDY AREA)	5,068	100	259,745	100	*	*

* - Negligible

2) Approximately 54% of the total present industrial BOD_5 load comes from those industries located south of the City of Zarqa in the area designated as Awjan al Charbi. The two single largest industrial contributors of BOD_5, namely Eagle Distilleries and United Factories, Ltd., are located in this area contributing 27.6% and 19.7% of the total industrial BOD_5, respectively.

3) TSS load from all industries in the Planning Area is presently estimated at 259,745 kg per workday. This is equivalent to approximately 4.33 million population equivalents, assuming an average daily per capita suspended solids contribution of 60g. Approximately 97% of this are inorganic phosphate tailing slimes and scrubber water solids, and approximately another 2% are pulp solids from the paper mill.

4) Other significant raw waste loads are as follows:

   - Chemical Oxygen Demand (COD) load (15,750 kg/day) from the Soap Factory. The primary source of the COD is the barometric condenser watewater.
   - Oil and grease, sulfide, and chromium loads from the tannery.
   - Sodium chloride and mercury loads from the chlor-alkali plant.

It is important to note that the total industrial flows and raw waste loads presented in Tables I-2.2 and I-2.3, respectively do not necessarily represent the industrial waste loads to the proposed Zarqa-Ruseifa Wastewater Treatment Plant. Discussions and recommendations regarding reducing wasteloads to the proposed Zarqa-Ruseifa Wastewater Treatment Plant by pretreatment, individual treatment and disposal, and improved wastewater management will be presented in subsequent chapters.

2.4 WASTEWATER CHARACTERIZATION

A summary of industrial wastewater characteristics is presented in Appendix A.2.

Table I-A.2.1 summarizes data collected from the Amman Sewage Treatment Plant files. This information represents samples collected and analyzed by the Royal Scientific Society during the period of May through September 1979.

In order to verify and augment existing analytical data, a sampling program was conducted as part of this study. Samples were collected by Malcolm Pirnie, Inc. and Jouzy and Partners, and analyzed by the Royal Scientific Society. The results of these sample analyses are presented in Appendix A.2 as Table I-A.2.2. Some measurements of pH, flow, and

20

conductivity were also made in the field during on-site facility inspections. The result of the field investigations are summarized in Table I-A2.3.

The following observations are offered regarding the wastewater characterization data:

2.4.1 Hussein Industrial City

Existing data (i.e. Table I-A.2.1) indicate the wastewater to be highly acidic (i.e. pH 4.0-5.5) while field measurements performed as part of this study indicate the combined discharge to the Zarqa River and the individual waste streams from the Detergent Factory and Soap Factory to be alkaline. This apparent discrepancy is believed to stem from the fact that the Ice-Cream Factory was not on-line during the more recent sampling effort. The wide pH fluctuation also illustrates the need for equalization or neutralization at this facility.

The BOD_5 analyses for the Soap Factory presented in Table I-A.2.2 are believed to be unrepresentatively low. This observation is made due to the extremely large difference in BOD and COD concentrations in the same sample and also the higher BOD results obtained in Table I-A.2.2.

2.4.2 Oriental Star Distilleries

The chemical characteristics of the sample dated 5/12/79 in Table I-A.2.1 are completely different than the other two samples. The acidic pH, high solids, BOD_5 and COD are characteristic of distillery slops from the alcohol plant which is no longer in operation. Consequently this sample was excluded from the mean calculation. The other samples are believed to be representative of present operation of redistillation and bottle washing processes. Also note that the 5/12/79 sample contains extremely high concentrations of lead, copper, zinc, and iron. This indicates severe contamination of the private well. The industry complained about the contaminated condition of the well during our on-site inspection and commented that at times the private well water had an "oily" smell with a visible sheen. All indications point to Hussein Industrial City as the likely source. There is a small cesspool located in the parking area just south of the Paint Factory which is believed to receive paint wastes. This cesspool is located only 100 meters from the Oriental Star Distillery well. The oily smell of the well water is likely waste mineral spirits used as the base or solvent in oil-base paints. The metals are likely from pigments used in paint formulation.

21

2.4.3 Oriental Mineral Water Factories (7-Up)

The high solids content of the sample dated 6/16/79 in Table I-A.2.1 is believed to be caused by the batch discharge of sludge from the lime-soda water softening system and was therefore excluded from the mean calculation.

2.4.4 Jordan Dairy Co.

The highly variable total solid and suspended solids concentrations observed in Table I-A.2.1 are not considered unusual due to the batch discharge nature of the process. The high solids and suspended solids observed in the sample dated 9/16/79 probably correspond to a discharge of cheese whey, lebeneh solids, or brine solution from cheese making.

2.4.5 Jordan Worsted Mills

The highly variable nature of the suspended solids content of this wastewater (see Table I-A.2.1 and I-A.2.2) is due to the heavy scour process and difficulties in obtaining a representative sample aliquote for analysis due to the floating nature of the woolen fibers which comprises most of the solids load.

2.4.6 Eagle Distilleries

BOD_5 analyses presented in Tables I-A.2.1 and I-A.2.2 are believed to be unrepresentatively low. This observation is made from examination of the BOD curves which show a "lag" for the first several days followed by rapid oxyden uptake. This indicates a poor "seed" or biological inhibition due to pH or some other chemical parameter.

2.5 DETAILED DESCRIPTION OF EACH INDUSTRY

Detailed descriptions of manufacturing processes, production, water use, and wastewater treatment and disposal practices are presented in the following subsections.

2.5.1 Yeast Industries Co., Ltd.

Yeast Industries Co., Ltd. operates a facility producing fresh and dry bakers yeast. The facility is located on the north bank of the Zarqa River in an agricultural area near the western perimeter of the Ruseifa Municipality. The facility operates 24 hours per day, 6 days per week.

The manufacturing process consists of preparing a nutrient solution from beet molosses, phosphates, magnesium sulfate, and ammonium sulfate into which yeast "seed" is placed. The yeast metabolizes the nutrient

22

solution in the fermentation process which is operated at controlled temperature and pH for maximum cell growth. Sulfuric acid is used to maintain an acidic pH. Following fermentation, cultivated yeast is separated from the nutrient solution by vacuum filtration compressed or dried and packaged for sale. The spent nutrient solution is discharged directly to the Zarqa River.

Other process wastewater sources are tank and floor wash, and boiler blowdown. Total process wastewater flow is estimated at approximately 112 m^3/day. Non-contact cooling water is recirculated through a cooling tower.

All process water reqirements are supplied by a private well. A minor amount of Ruseifa municipal water is used for sanitary purposes.

2.5.2 Jordan Phosphate Mines Co., Ltd.

The Jordan Phosphate Mines Co., Ltd. is one of the major industries in the Planning Area employing about 823 and operating a phosphate rock beneficiation plant, screening and drying facilities, and a superphosphate bagging facility. (refer to Figure I-2.1 for locations). All active mining in the Planning Area has ceased with present and future strip mining confined to the area south of the Amman-Zarqa Highway between Marka and Wadi al Ushsh. Jordan Phosphate previously operated a pilot-plant for superphosphate manufacture but this facility has been permanently shut down. Superphosphates for the bagging facility are imported.

Annual mine production is approximately 750,000 dry tonne/year. Two standard grades of phosphate rock are produced from screening and drying:

- 66 - 68% bone phosphate of lime (bpl)
- 70 - 72% bpl

Coarse (plus ½") phosphate rock from screening is stockpiled for future beneficiation by calcination or flotation processes.

The beneficiation plant and offices are located on the Zarqa-Ruseifa Road on the western edge of Ruseifa proper. The beneficiation process consists of wet screening, hydro-sizing, and drying to produce a fine soft phosphate "concentrate". The beneficiation plant dryer (No. 5) is equipped with an electrostatic precipitator (ESP) for air pollution control. ESP phosphate dust is sold as a by-product under the trade name "Jorphos". The beneficiation plant has a nominal capacity of 320,000 tonne/yr and currently operates at approximately 70% capacity.

Located near Drier Nos. 3 and 4 is a pilot-plant for the production of the more soluble "superphosphate" (monocalcium phosphate) from insoluble phosphate rock (fluorapatite - $Ca\ F_2$: $3\ Ca_3\ (PO_4)_2$). This facility has been permanently shut-down according to industrial representatives. Superphosphate is now trucked in and bagged near the location of the superphosphate pilot-plant.

There are two major wastewater sources from phosphate processing activities within the Planning Area:

- "tailing slimes" from the beneficiation plant.
- scrubber wastewater from Dryer Nos. 3 and 4.

The "tailing slimes" are the fine clays and inorganic colloidal slimes washed from the phosphate rock during beneficiation. The tailing slimes are mechanically thickened with the overflow recycled to the process. The thickener underflow is estimated by industry to average about 1440 m^3/day. This is discharged to a tailing impoundment which drains to a pond in a small enclosed drainage basin south of the beneficiation plant.

The beneficiation plant operates 21 hours/day, 6 days/week but water supply continues uninterupted to maintain flow through the tailing slime thickeners.

Once-through dryer scrubber water, averaging an estimated 10 m^3/hr. (240 m^3/day), is discharged to three small concrete settling basins which overflow to the Zarqa River. These basins were observed to be filled with solids to the point where no sedimentation was occurring.

All water requirements are supplied by private wells located on the north side of the Zarqa River Valley. In summer when well capacity drops from approximately 60 m^3/hr to 25-30 m^3/hr, water is pumped from the tailings pond back to the beneficiation plant to supplement the well water supply for process demands.

2.5.3 Oriental Star Distilleries Co.

The Oriental Star Distilleries Co. operates an alcoholic beverage manufacturing and bottling facility. The facility is located immediately adjacent to the Ruseifa Bridge on the Zarqa - Ruseifa Road. The principal activities at this facility are the redistillation of alcohol to make brandy and arak, and bottling. Alcohol was previously produced on-site from molasses but the manager claims the alcohol plant is no longer operational.

The major wastewater sources are once-through redistillation cooling water (21 m^3/day) and bottle wash water (8 m^3/day). Redistillation residue is of minor volume but is characteristicly a strong liquor. Caustic detergent solution is also of minor volume with about 500 liters dumped at the end of each week. All process wastewaters are discharged to the Zarqa River without treatment.

Municipal water supplies are used for process make-up water and drinking only. All cooling water and bottle wash water is from a private well.

2.5.4 Hussein Industrial City

Hussein Industrial City, a complex of 6 factories located in Ruseifa along the Zarqa River, is operated by the Industrial Commercial and Agricultural Co., Ltd. The factories share a common water supply from an on-site well and elevated storage tank and a common wastewater disposal system consisting of a large cesspool measuring 6 X 20 X 5 m (deep) and two smaller cesspools. Factories are interconnected by sewers but details of the sewer conveyance system are unknown as industrial representatives claim that any sewer drawings that may have been made when the complex was originally constructed in 1961 are lost. A 300 mm concrete sewer pipe exits from the southeast corner of the property discharging to the Zarqa River. It appears that this outfall sewer is an overflow from the adjacent main cesspool. The maintenance manager also claims that approximately 80 - 100 m^3/day of wastes are pumped from the main cesspool for treatment and disposal at the Amman Sewage Treatment Plant.

More detailed process and wastewater treatment and disposal practices for each of the factories follows.

2.5.4a Detergent Factory

The detergent factory manufactures three formulations of ABS (alkyl benzyl sulfonate)-based synthetic detergents by the spray-dried process. In this process the sulfonate surfactant is blended in the "crutcher" with requisite builders such as sodium tripolyphosphate and additives such as corrosion inhibitors (e.g. sodium silicate), antiredeposition agents (e.g. carboxymethyl cellulose), and brightners (e.g. sodium perborate). The detergent slurry is then strained and pumped to the top of a spray tower through spray nozzles located around its perimeter. The counter-current flow of hot air past falling detergent dries the slurry to a fine powder ready for packaging. Process wastewater sources are as follows:

25

- Dryer blower cooling water (non-contact)
- High-pressure piston pump cooling water (contact)
- Crutcher pump gland water (contact)
- Strainer and misc. cleaning water

All wastes are discharged to the on-site sewer system and in turn to the Zarqa River via overflow from the main cesspool.

The facility operates 16 hours/day, 6 days/week and annual production averages about 4000 tonnes/year.

2.5.4b Soap Factory

The soap factory produces about 5 tonne/day bar soap by the batch kettle boil and vacuum spray-dry process. A flow diagram for the process is presented in Figure I-2.2.

The kettle boil process starts by charging the kettle or tank with tallow, caustic, and oils followed by a multiple step batch process of boiling, salting, and settling to separate impurities from the neat soap. The only wastewater from this process is a low-volume concentrated liquor separated from the soap, commonly referred to as "spent lye" or "sewer lye".

The vacuum spray dryer uses a tower similar to that of the detergent plant where the heated neat soap is sprayed under reduced pressure to effect drying. The vacuum is drawn by a barometric condenser. Most of the particulate carry-over in the exhaust gas is removed by cyclones although some residual ultimately ends up in the barometric condenser wastewater. The barometric condenser is by for the largest water consumer and wastewater source in the soap factory and the entire complex with a flow measured at about 13 m^3/hr (312 m^3/day). The other major wastewater source is non-contact machine cooling water estimated at about 8 m^3/hr. There are presently no provisions to recirculate either of these waste streams. Barometric condenser wastewater and non-contact machine cooling water are combined and discharged to a small cesspool which appears to overflow to the main cesspool and ultimately the Zarqa River. Discussions with industry personnel have also indicated that a portion of this wastewater is used by a neighboring restaurant for cleaning and in their garden ponds.

Other less significant waste streams include a minor amount of floor and tank wash water and water pumped from the oil-water separator tank located under the fat and oil drum steam heater.

2.5.4c Ice Cream Factory

The ice cream factory produces about 6 tonne/day of ice cream from reconstituted (dry) milk. The facility is seasonal in operation with a

10

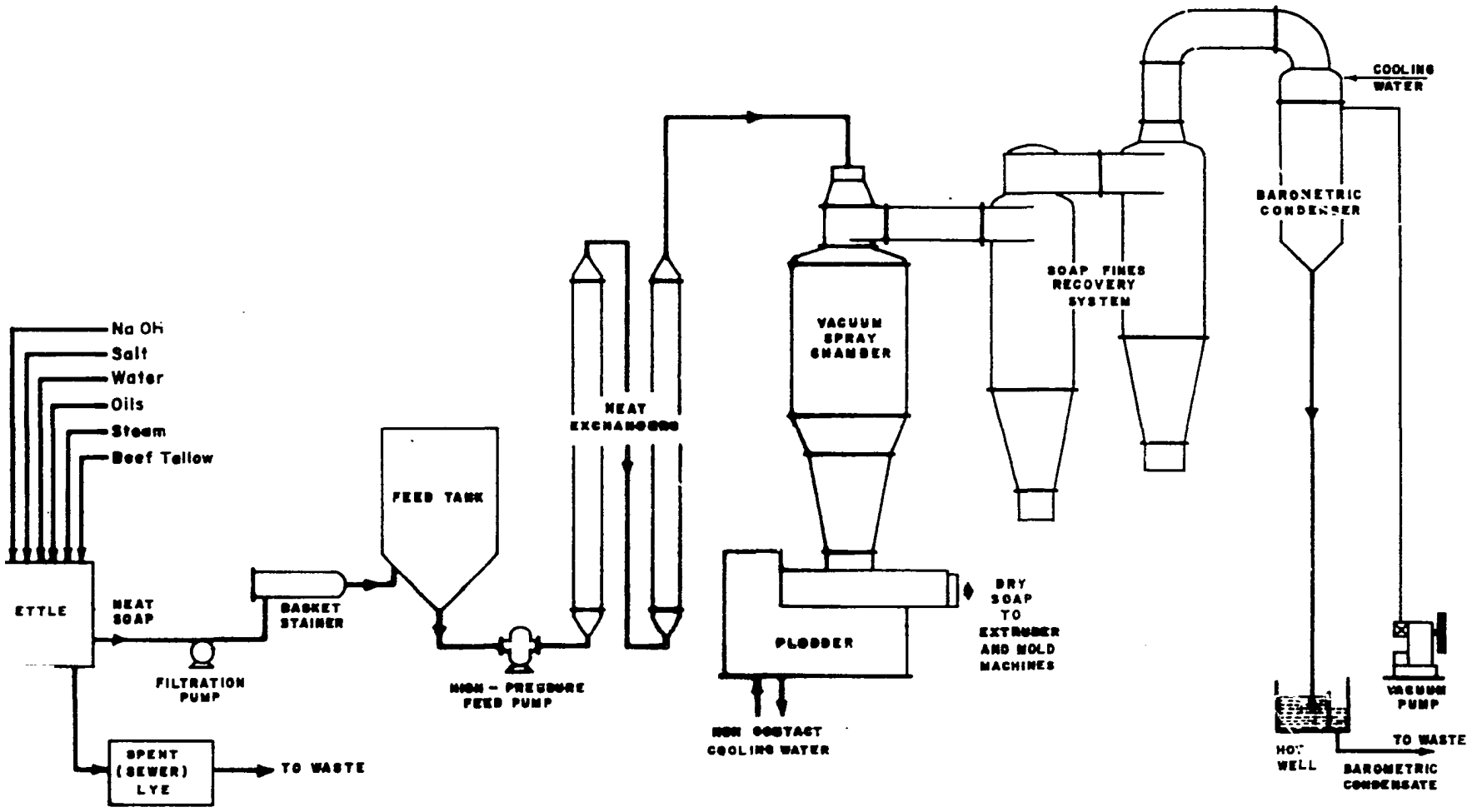

PROCESS FLOW DIAGRAM — SOAP FACTORY

FIGURE I-2.2

period of no production from about mid-October through mid-March. When operational, the facility works 8 hours/day, 6 days/week.

The main sources of process wastewater are as follows:

- washing and cleaning out of product remaining in piping, tanks, and other equipment performed routinely after every processing cycle.
- floor wash and spillage produced by leaks, overflow, equipment malfunction, or careless handling.
- process losses including product wasted during pasteurizer start-up and shut-down, and purging of pipe lines.
- compressor cooling water (non-contact, once through).

Detergents are used for tank washing and an alternating nitric acid and caustic wash is used for cleaning and disinfection of the pasteurization plate heat exchanger. All wastewaters are believed to be discharged to the main cesspool.

2.5.4d Cosmetics Factory

The cosmetics factory is essentially a mixing and formulation facility producing shampoo, toothpaste, and shaving creme. The factory operates 8 hours/day (occasionally 16 hours/day), 6 days/week. The only process wastewater generated is from floor and equipment clean-up and is estimated by the industry to be about 0.2 m^3/d.

2.5.4e Paint Factory

The paint factory formulates approximately 575 m^3 of paint per year. Approximately 50% of the production is latex decorative paints with the remainder oil-base decorative paints, varnishes, and primers.

There is little difference in the production processes for solvent-base and water-base paints. The major production difference is in the solvent or vehicle; oil-based paints produced at this facility are dispersed in white mineral spirits, while latex paints are dispersed in water with a surfactant used as the dispersing agent. Manufacturing is a batch-type process which consists of three major steps:

- mixing and grinding of raw materials
- tinting and thinning
- filling operations

Wastewaters generated from the paint formulating process are small in volume and come entirely from tank cleaning between batches. A water rinse is used for latex paint tank cleaning and comprises the bulk of the wastewater flow

(i.e. 1.5 m^3/day). Latex paint tanks are periodically soaked in a 10 percent caustic solution to remove residual build-up. This caustic solution is reused with about 200 l/yr discharged to waste in a single dump.

Oil-based paint tanks are cleaned with white mineral spirits which are reused until the pigment concentration reaches a point where it must be dumped. Approximately 750 liters of this waste is dumped every 3 months.

Zylene, a strong benzene-based organic solvent, is periodically used to remove building from oil-based paint tanks. A total of about 100kg/yr of zylene is used.

There is a small cesspool immediately adjacent to the paint factory which is known to receive sanitary wastes. Whether process wastewaters from the paint factory are discharged to this same cesspool or to the main cesspool overflowing to the Zarqa River is unknown.

2.5.4f Biscuit Factory

The biscuit factory is essentially a dry process facility baking and packaging biscuits and cookies. Approximately 5 m^3/day of water is used for dough making and the only wastewater is a minor amount of cooling water used for the plastic wrapping machine.

2.5.5 Oriental Mineral Water Factories Co.

The Oriental Mineral Water Factories Co. is located on the bank of the Zarqa River in Ruseifa and operates a bottling facility for carbonated soft drinks (e.g. 7-Up).

Production varies seasonally with single-shift operation from October through May and two-shift operation from June through September. Present employment is about 52 and annual production is about 936,000 l/yr.

The only wastewater sources are as follows:

- bottle cleaning rinse water
- caustic solution dump from bottle washing
- sludge from lime-soda water softening process and water treatment filter backwash.
- floor wash, spills, misc. clean-up

Bottle cleaning rinse water constitutes the majority of the wastewater flow at about 92 m^3/day. All process wastewaters are discharged to the Zarqa River without treatment.

Present water use average approximately 96 m^3/day according to industry estimates. Water meter readings indicate that an average of 38 m^3/day are from Ruseifa municipal supply. The remaining 58 m^3/day is from a private

29

well. The relative percentage of water from private and municipal supply change seasonally. More private well water is used in the winter and spring when groundwater levels and well yield is higher.

2.5.6 Transjordan Minerals Research Co.

The Transjordan Minerals Research Co. is located in Ruseifa between the Oriental Mineral Water Factories Co. and Jordan Overall Co., Ltd. . This facility manufactures marble (terrazo) tiles. The manufacturing processes are outlined below:

- marble wet cutting
- concrete mixing
- tile casting
- wet grinding

Wastewater is generated by the wet cutting and grinding processes. The wastewater is conveyed to three small concrete settling basins. The supernatant from the settling basins is pumped to an elevated storage tank for reuse in concrete mixing. No wastewater is discharged. The final disposition of the solids in the settling basins is not known.

Make-up water for the process amounts to an average of about 4 m^3/day from a private well. Municipal water is used for drinking.

2.5.7 Jordan Overall Co. Ltd.

The Jordan Overall Co., Ltd. is located in Ruseifa between the Transjordan Minerals Research Co. and Jordan Dairy Co.. Sheet metal household appliances are manufactured at this facility. The 1980 production schedule calls for 13,000 gas oven/ranges and 12,000 washing machines. The facility operates 8 hours/day, 6 days/ week.

Process wastewater sources are as follows:

- porcelain enamel grinding
- alkaline rinse (pickling line)
- spent pickle liquor
- boiler blowdown

Porcelain enamel grinding wastewater is a low-volume (i.e. 1 m^3/day), intermittent batch discharge via a small diameter (50 mm) outfall to the Zarqa River.

The pickling process is the major wastewater source. The pickling process is used to remove dirt, grease, and iron oxide scale from fabrication to prepare the metal for final finishing. This is accomplished by immersing the steel in dilute acid (2-3%), in this case hydrochloric

30

acid. Concentrated acid is periodically added to renew used acid and make-up for losses to drag-out. The pickle liquor must be dumped periodically as the iron concentration increases to such a degree that it inhibits the pickling action of the acid. Approximately 18 m^3 of pickle liquor is dumped every 6 months.

After pickling, the steel is immersed in alkaline rinse tanks. Intermittent immersion of the steel displaces about 4 m^3/day of wastewater, which is discharged to the Zarqa River. The total contents (i.e. about 8 m^3) of the alkaline rinse tanks are dumped each Thursday at the end of the work day.

Boiler blowdown is continously discharged directly to the Zarqa River at about 8 m^3/day.

2.5.8 Jordan Dairy Co.

The Jordan Dairy Co. operates a multi-product dairy processing facility in Ruseifa. The plant produces pasteurized milk, yogurt, lebeneh (a concentrated yogurt), white cheese, cheddar cheese, and ice cream from reconstituted (dry) milk. Total plant production averages about 150,000 l/day.

The yogurt line works two shifts per day while the other lines work one shift per day.

Wastewater sources are similar to that of the ICA Ice Cream Factory except the wastewater volumes are higher corresponding to the higher production. There are also some additional waste by-products such as whey from cheese processing and solids from lebeneh processing. Tanks and equipment are automatically cleaned by a continuous-in-place system using nitric acid and caustic rinse solutions. All wastewaters are discharged to the Zarqa River without treatment. Compressor cooling water is recirculated.

All process water is supplyed by a private well with drinking and sanitary water from Ruseifa municipal supply.

2.5.9 Jordan Worsted Mills Co., Ltd.

The Jordan Worsted Mills Co., Ltd. operates a textile mill located along the Zarqa River near the western edge of the Municipality of Ruseifa. The mill produces about 1,100,000 linear yd/yd (different widths) of woolen fabric from pre-dyed yarns. The mill operates 16 hours/day, 6 days/week.

Major manufacturing processes employed are as follows:

- o wet finishing (heavy scour)
- o dry processing
- o knitting

There is no wastewater generated from the dry processing or knitting operations. All wastewater discharged is from heavy scouring. Heavy scouring is the term applied to the washing of fabric to remove oils, grease, dirt, or any other foreign materials to prevent the finished fabric from rotting or smelling. Sodium carbonate, formic acid, and aramine soft soap are added as washing agents. Heavy scouring is performed by 3 machines rated at 100 gpm (22.7 m^3/hr), 60 gpm (13.6m^3/hr) and 30 gpm (6.8 m^3/hr). One scouring cycle typically requires about 25 minutes. The daily wastewater flow from scouring averages approximately 87 m^3/day and is discharged directly to the Zarqa River without treatment.

All water is supplied by a private well.

2.5.10 Sultan Plastics Co.

Sultan Plastics Co. is located next to Jordan Worsted Mills in Ruseifa. This facility manufactures thermoformed plastic containers. The only water use in the process is for non-contact cooling which is recirculated. Other than sanitary wastewater, the only discharge is a very minor amount (several liters/week) of ion exchange eluant (brine solution) from the cooling water treatment system. All water is from Ruseifa municipal supply.

2.5.11 Noralux Industrial Commercial Co.

Noralux Industrial Commercial Co. operates a paint formulation plant in Awjan al Janubi. The plant operates 8 hours/day, 6 days/week. Total annual production averages about 760 m^3/year, of which about 2/3 is latex paint and 1/3 is oil-base paint. The manufacturing process and wastewater sources are identical to those at the ICA Paint Factory.

Latex tank rinse is estimated at 0.32 m^3/day. Process wastewater is discharged along with sanitary wastewater to a cesspool. Total daily water use averages 2.3 m^3/day, all from Zarqa municipal supply.

2.5.12 Kologhassi Foam and Mattress Factory

Kologhassi Foam and Mattress Factory manufactures latex foam "blocks" and latex foam mattresses. Water is used to make the foam but there is

32

no wastewater generated. All water is from Zarqa Municipal supply.

2.5.13 Cream Tex

Cream Tex operates a textile mill in Awjan Al Janubi. The mill dyes and prints polyester bolt fabric (greige goods). The facility operates 8 hours/day, 6 days/week, but was temporarily shut-down at the time of the survey as it searched for new markets.

Process wastewater sources are as follows:

- o spent dye solution
- o silk screen rinse
- o floor wash

The spent dye solution also contains sodium hydrosulfite and ammonium sulfate used as dye stablilizing materials. The dye solution tanks contain about 1.75 m^3 which is dumped four times per day. Silk screen rinse and floor wash is estimated at about 2 m^3/day. All process wastewater is discharged to a concrete ditch which drains to the Zarqa River. All process water is from a private well. Sanitary water is from the Zarqa municipal supply.

2.5.14 Jordan Tanning Co. Ltd.

The Jordan Tanning Co. Ltd., operates a leather tannery in Awjan Esh Sharqi. The tannery employs 150 - 160, working 8 hours/day, 6 days/week. Every working day approximately 250 hides (6 tonne/day after soaking) are processed into 930 m^2(10,000 ft^2) of finished leather uppers and sole leathers. Cattle, pig, and sheep hides are processed at this facility with cattle hides as the primary raw material. Differences in the hides are minor.

For purposes of characterizing waste loads, there are four standard processes in a typical tannery:

1. Beamhouse
2. Tanhouse
3. Color, and fatliquor
4. Finishing

Each of these processes are discussed in the context of the Jordan Tanning Co. below.

1. Beamhouse Processes - Nearly all hides are received in bundles as cured green salted or brined hides. The first step is washing and soaking in vats to restore moisture content and remove dirt, salt, blood, manure, and non-fibrous proteins. Washing and soaking wastewater typically contributes about 20 - 42% of the total wastewater flow (Reference 4) and most of the salt load to treatment.

Following soaking, hair is removed by liming and mechanical unhairing. The hides are placed in revolving wooden drums with a lime slurry to which sodium sulfide is added as a "sharpener". Limed hides are sent through fleshing machines to remove the fatty tissue and meat left on the hide at the packing house. Cold water is necessary to keep the fat congealed. Fleshings are recovered and stored behind the building for later sale to plants for conversion to glue. After fleshing, the limed hides are mechanically unhaired with the hair recovered for dying and rug making. The liming and unhairing process is one of the principal contributors to the waste effluent, typically accounting for about 16-26 percent of the flow, 52-61 percent of the BOD (Reference 4), and nearly all of the sulfides discharged.

2. Tanhouse Processes - Tanhouse processes include:

   - deliming
   - pickling
   - tanning

   Deliming is performed in drums which contain a solution of ammonium sulfate. This is followed by pickling in a brine and acid solution to condition the hides for the tanning process. Two tanning processes are employed at the Jordan Tanning Co.: heavy leathers for use as sole leather is vegetable tanned in a solution containing plant extracts such as vegetable tannins; upper shoe leathers and lighter leathers are chrome tanned in a solution of chromium sulfate. Deliming and pickling typically constitute about 16 percent (Reference 4) of the total wastewater flow. Chrome tannage wastewater comprises only about 5 percent (Reference 4) of the total wastewater flow but significant amounts of chromium.

3. Color and Fatliquor Processes - Bleaching hides with sodium bicarbonate and sulfuric acid after vegetable tanning is practiced on sole leathers. Coloring is done with synthetic dyes in drums sometimes simultaneously with chrome retanning. Fatliquoring is the operation in which fats and oils are added to replace the natural oils lost in the beamhouse and tanhouse processes. Liquid wastes from the color and fatliquor processes may be high volume- low strength compared with other process and contain high oil and grease concentrations.

4. Finishing Processes - Finishing operations such as drying, wet-in coating, staking or tacking provide only minor contributions to the wastewater, primarily from equipment clean-up.

As illustrated in the above process descriptions, the entire tannery operates as a sequental batch operation. A generalized time schedule of process wastewater dumps is as follows:

Process	Wastewater Dump Schedule
Vegetable Tannage	Intermittent
Wash & Soak	intermittent
Lime (unhair)	7-9 am
Delime	9-11 am
Pickle/Chrome Tannage	7-8 am
Fatliquor /Coloring	11:30 am - 1 pm

All process wastewaters are discharged to a series of 9 evaporation/seepage ponds for disposal. A wastewater flow schematic is illustrated in Figure I-2.3. As seen in Figure I-2.3, tanhouse and fatliquor wastewaters are segregated from beamhouse wastewaters, apparently to minimize sludge formation. Pond Nos. 1, 2 and 3 receive chrome tannage and fatliquor wastes; Pond Nos. 4, 5 and 6 receive beamhouse wastes; and Pond No. 7 receives vegetable tanning wastewaters, some pumpage from the beamhouse ponds distribution trough, and some natural drainage. Pond No. 7 overflows during the spring to a small Wadi tributary to Wadi Hajar. Pond Nos. 8 and 9 receive overflow from Pond No. 5, seepage from Ponds Nos.1-6 and some natural drainage from Awjan esh Sharqi. There is no visible overflow from Pond No. 9.

All process water requirements are supplied by a private well and elevated storage tank.

2.5.15 Jordan Paper and Cardboard Factories Co., Ltd.

Jordan Paper and Cardboard operates a paper mill and corrugated cardboard box manufacturing facility in Awjan esh Sharqi.

The paper mill uses sorted scrap paper for about 93 percent of its raw material. Last year 6863 tonne of scrap paper was pulped. A generalized flow diagram for the process is presented in Figure I-2.4.

First, the scrap paper is charged into the hydropulper and water is added to provide the desired consistancy of four to six percent. The hydropulper is a large open vat with an exposed rotating impeller blade to rip and shred the paper. Chemical additives include starch as an adhesive, aluminium sulfate for tensile strength, and resin sizing for wet strength.

The stock is then passed to centrifugal cleaners, screens, and thickners prior to storage in the dump chest. Stock flows upon demand from the dump chest through refiners to the wet end of the fourdrinier paper machine. The fourdrinier machine is an endless wire belt on to which the pulp suspension is deposited and the water permitted to drain.

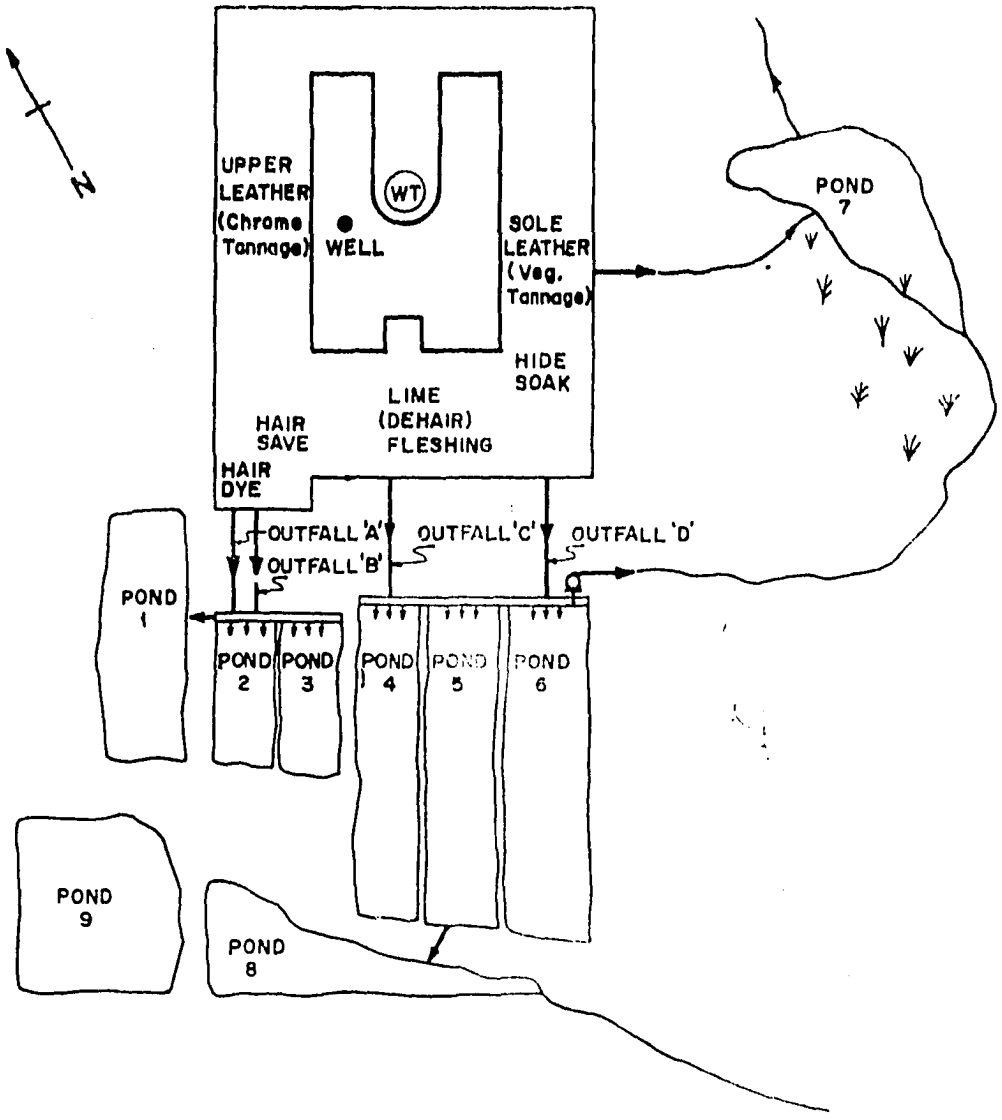

NOT TO SCALE

JORDAN TANNING COMPANY WASTE WATER FLOW SCHEMATIC	FIGURE I - 2.3

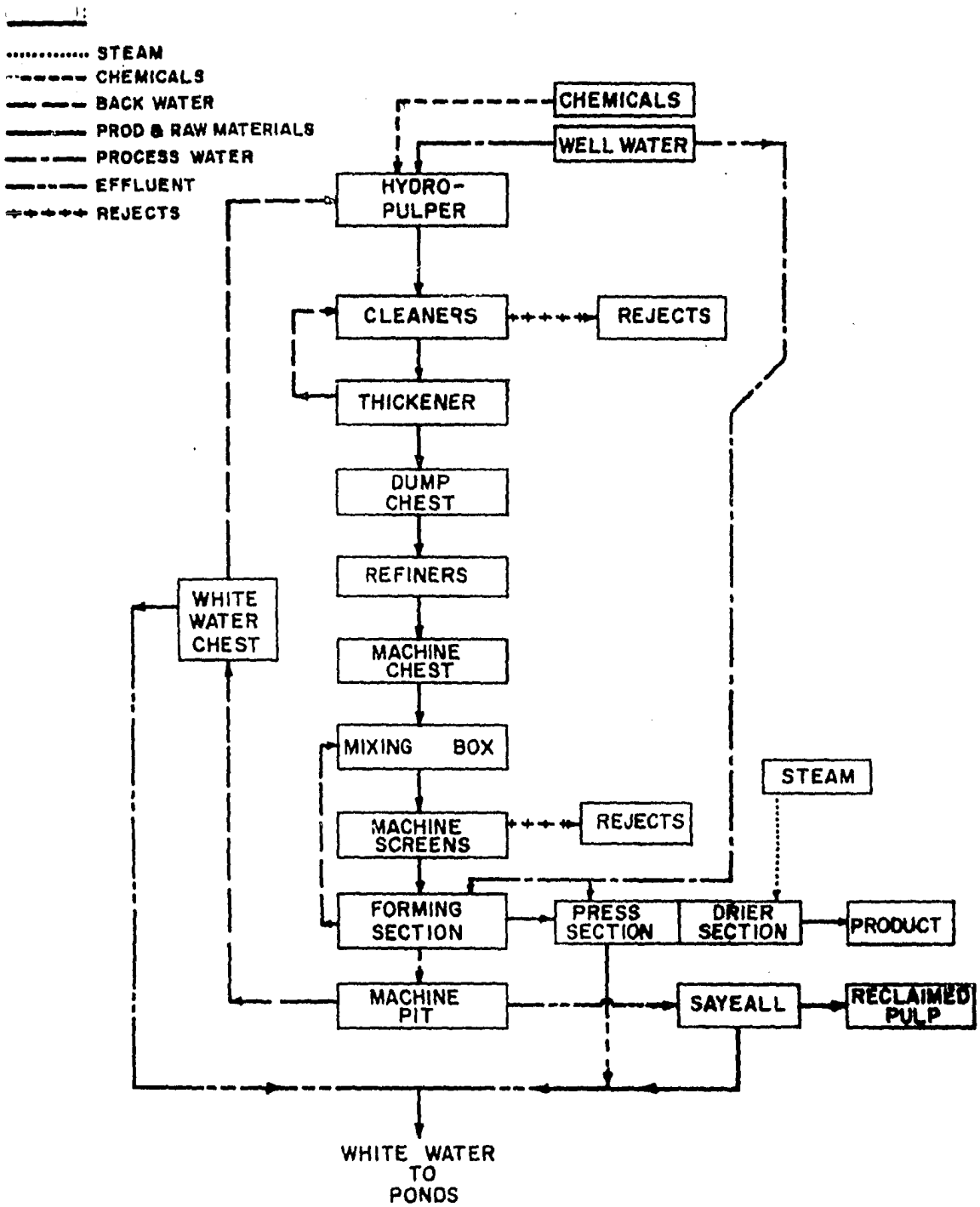

SOURCE: "Development Document for Effluent Guidelines and New Source Performance Standards for the Unbleached Kraft and Semichemical Pulp Segment and the Pulp, Paper and Paperboard Mills Point Source Category" United States Environmental Protection Agency, EPA - 440/1-74-025-a, May 1974

WASTE PAPER BOARD MILL GENERALIZED PROCESS FLOW DIAGRAM	FIGURE I-2.4

The fiber layer remaining is removed from the wire, pressed, and dried. The water which drains through the paper machine is known as "whitewater" and contains suspended fiber, pulp fines, and chemicals used as additives in paperboard. Some of the whitewater is recycled through the machine stock loop or reused for hydropulping make-up water, but most is discharged as wastewater.

The paper mill also uses about 490 tonne/yr of straw for pulping. This pulping process is slightly different from the scrap paper pulping process. The straw is cooked or digested in a heated caustic solution and then washed. "Weak black liquor" comes from the washing operation and typically contains 10-16 percent solids (Reference 1). Weak black liquor contains inorganic cooking chemicals and organic straw constituents separated in the pulping process. This wastewater is also discharged to the pond system. A generalized flow diagram for this process is presented in Figure I-2.5.

The pond system consists of 4 ponds in series. The two uppermost ponds are earthen with concrete dams. These two ponds occupy about 0.8 hectares and have heavy deposits of paper solids with very little standing water. These ponds overflow to the third and largest pond with about 1 hectare of standing water. This pond, in turn, flows to the final pond of about 0.45 hectares. There are no provisions for aeration or seepage control and the ponds were observed to be septic. Usually there is no discharge from the final pond except during extremely wet years and when the ponds are drained for cleaning about every two years. Industry representatives claim that the ponds also serve as fire protection.

The paperboard produced in the paper mill is used to make the corrugated layer of cardboard boxes. Imported Kraft liner rolls are used for the outside finished layer of the boxes. The boxes are made in a separate building from the paper mill. The box mill is a dry operation with no process wastewater discharge.

All water requirements are provided by two private metered wells and an elevated storage tank. The entire facility employs about 240 and operates 6 days/week. The paper mill works two shifts/day and the box mill works three shifts/day.

2.5.16 Jordan Iron and Steel Industry Co., Ltd.

Jordan Iron and Steel operates a facility in Awjan esh Sharqi with a scrap melt plant and a hot rolling mill. The rolling mill has two

38

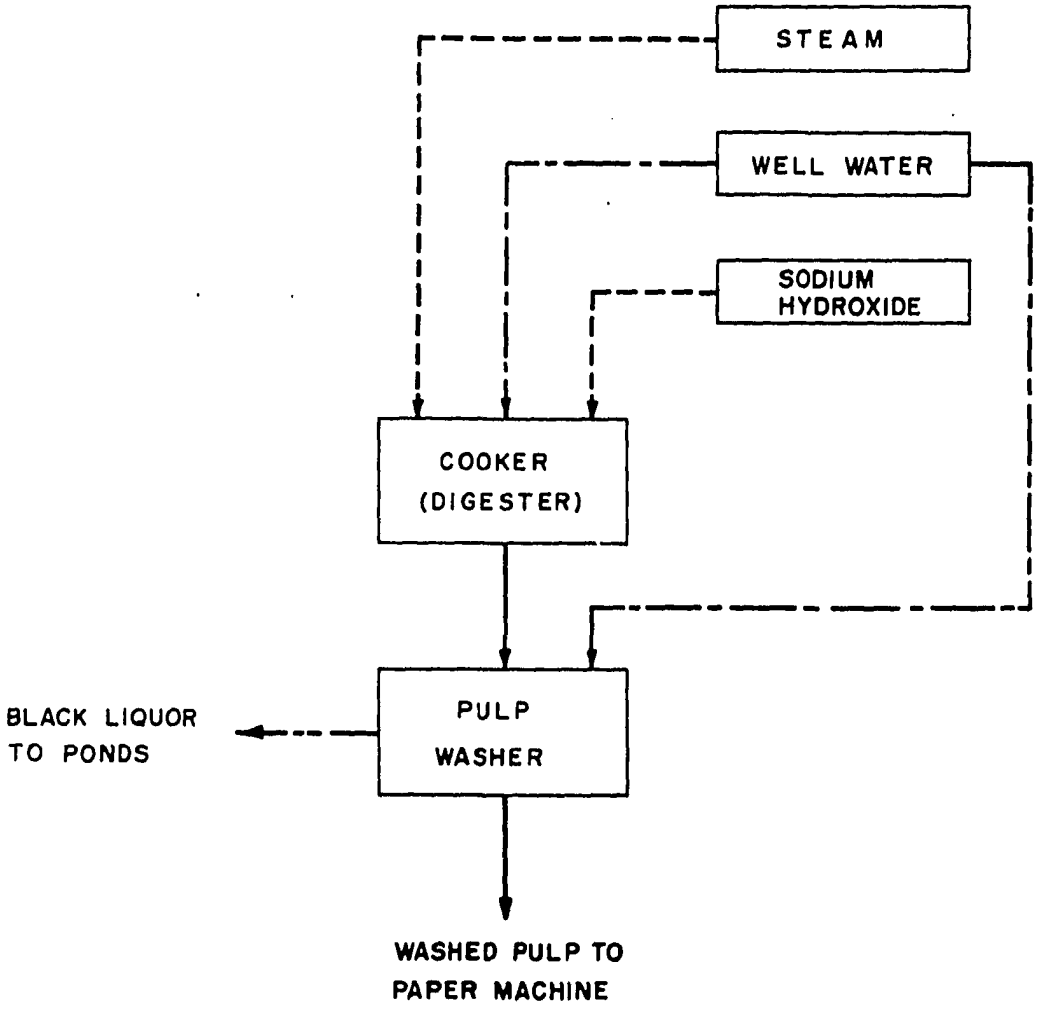

GENERALIZED STRAW PULP PROCESS FLOW DIAGRAM	FIGURE I-2.5

lines, one operating 24 hours/day and one operating 16 hours/day. The melt plant operates 24 hours/day. The company employs 265 workers and operates 6 days/week.

The melt plant uses an electric arc furnace to melt scrap iron with continuous casting of the molten steel into steel billets. Current melt plant production is about 70 tonne/day.

The rolling mill hot rolls the steel billets from the melt plant and an additional purchased amount into steel reinforcing bars. In 1979 the rolling mill produced 67,325 tonne of reinforcing bars.

Water is used in the melt plant for furnace cooling and contact cooling for continuous casting. Both non-contact furnace cooling water and contact casting water arerecirculated through a cooling tower. Treatment consists of settling for scale removal. All make-up cooling water is softened by ion-exchange, chlorinated for algae control, and polyphosphate added for corrosion control.

The only wastewater consists of cooling tower blowdown and a minor amount of brine solution from ion-exchange resin regeneration.

Wastewater from the rolling mill consists of contact cooling water, which contains scale and metal chips flexed from the steel surface during rolling, debris from the floor, and lubricating oil from the roller bearings. Approximately 1250 m^3/day of this wastewater is discharged directly to a small wadi without treatment.

Most of the process water requirements are provided by a private well but municipal records showed that municipal water consumption by the steel mill averaged approximately 108 m^3/day in 1979.

2.5.17 Jordan Ceramic Industries Co. (Ceramco)

Ceramco operates a large, modern ceramics factory in Awjan esh Sharqi. The factory employs 240, working 8 hours/day, 6 days/week. In 1979 the factory produced approximately 4000 tonne of ceramic tiles and 2000 tonne of sanitary ware (i.e. toilets, lavatories, etc.).

The process requires water for clay slurrying, cooling, wet grinding, and washing. All water is supplied by private well.

Wastewater from wet grinding, washing and cooling is discharged to a concrete settling tank to settle out the inorganic clay solids. Some of the water from the settling tanks is reused for cooling water. The settling tanks periodically overflow into a small, dry wadi.

2.5.18 Jordan Industries and Match Co. (JIMCO)

JIMCO operates a new facility in Awjan esh Sharqi manufacturing and packaging wooden safety matches. The factory employs about 50, working one 8-hour shift per day, 6 days per week.

The manufacturing process consists of preparing a solution of potassium chlorate, sulfur, manganese dioxide, ferric oxide, phosphorus, and animal glue into which the head of wooden match sticks are immersed, then dried and packaged. The manufacturing process is automated and continuous while packaging is labor-intensive.

Process wastewater sources are as follows:

- o floor wash
- o solution tank clean
- o boiler blowdown

Total wastewater flow is approximately 6 m^3/day according to industry estimates and is essentially a very dilute solution of the chemicals used in the manufacturing process. This wastewater is co-disposed with sanitary wastewater in a cesspool.

A private well supplies all water requirements of the facility.

2.5.19 Jordan Distilled Chemical Company

The Jordan Distilled Chemical Company operates a chlor-alkali chemical manufacturing plant in Awjan esh Sharqi. The plant employs about 60 workers, and operates continuously, 24 hours/day, 7 days/week. The plant produces about 800 tonne/year of liquified chlorine gas and 2400 tonne/year of 45 percent grade caustic soda (sodium hydroxide). Secondary products are sodium hypochlorite and hydrochloric acid.

There are two different processes employed by the chlor-alkali industry: the mercury cell process; and the diaphragm process. The chemistry of the processes are essentially the same. The basic difference is that in the diaphragm cell an asbestos or synthetic polymer diaphragm is used to separate metallic and/or graphite electrodes while in the mercury cell process, mercury is used as the cathode and graphite plates as the anodes with no diaphragm. The mercury cell process is of particular concern from a wastewater treatment standpoint due to the mercury carry-over into the wastewater. The Jordan Distilled Chemical Co. uses the mercury cell process exclusively and subsequent discussions will be limited to that process.

A process flow diagram for the mercury cell process employed at Jordan Distilled Chemical Co. is presented in Figure I-2.6. The raw material,

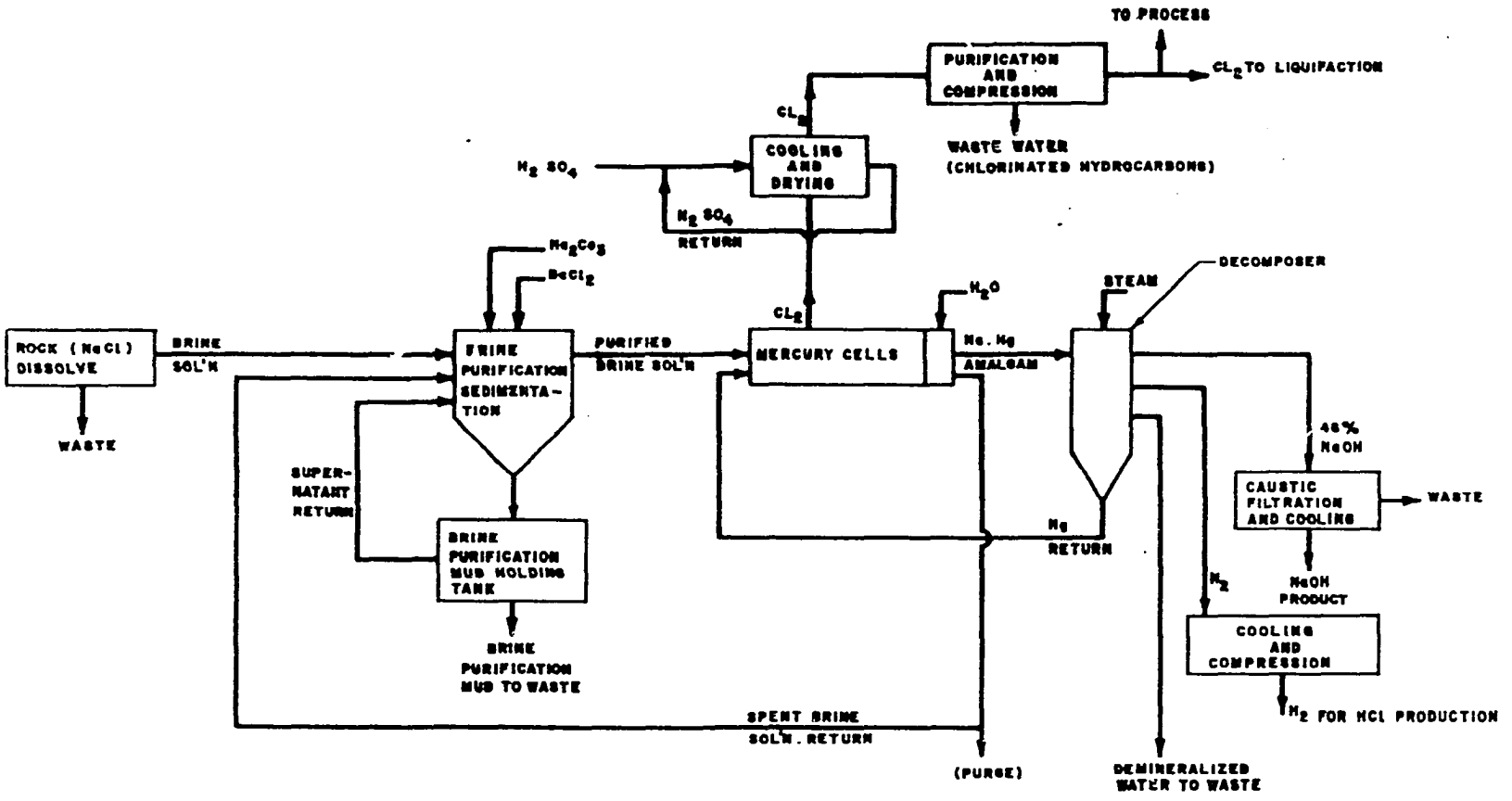

DAPTED FROM : Development Document for Effluent Limitations Guidelines and New Source Performance Standards for the Major Inorganic Produc. Segment of the Chemical Manufacturing Industry", U.S. Environmental Protection Agency, EPA-440/1-74-007a, 1974.

MERCURY [illegible] PROCESS FLOW [illegible] S [illegible]	E [illegible]-2.6

salt, is dissolved and purified by addition of barium chloride and soda ash to remove magnesium, calcium, and sulfates prior to electrolysis. These brine impurities are settled out as a sludge or "mud" which is wasted. The purified brine is fed to the mercury cell, wherein chlorine gas is liberated at the graphite anodes and sodium-mercury amalgam forms at the bottom of the cell (cathode). The amalgam is decomposed external to the cell by the addition of water and steam, liberating hydrogen gas, sodium hydroxide and mercury. The hydrogen is cooled and dried for production of hydrochloric acid; the sodium hydroxide is filtered for sale; and the mercury is returned to the cells. Some spent brine solution is returned to the brine purification step and the remainder is discharged as wastewater. Spent brine solution and the other wastes from gas purification and drying are collectively referred to throughout the remainder of this report as mercury cell wastewater. Cooling water is recirculated through towers.

Mercury cell wastewater is continuously discharged at approximately 33.2 m^3/day without treatment to a small wadi. The wadi runs north from the plant passing west of the steel mill where rolling mill cooling water enters and ultimately to two small ponds near the Amman - Zarqa Highway. These ponds are dry in the hot summer months. The wastewater from the ponds is believed to be used for irrigation purposes.

Brine purification muds are retained in a concrete holding basin of about 48 m^3 volume. After settling for about one week the supernatant from the holding tank is recycled to the process and the residual mud is pumped to the outfall sewer with mercury cell wastewater.

All process water requirements are supplied by water purchased from a neighbor's private well. Sanitary water requirements are supplied by Zarqa municipal water.

2.5.20 Jordan Army Blanket Factory

The Jordanian Army operates a blanket, carpet, and tent fabrication facility in Awjan esh Sharqi. The facility employs about 200 and operates 8 hours/day, 6 days/week.

Bolt fabric is purchased, cut and sewn into tents. This is a dry process generating no wastewater. The carpet manufacturing process is also dry using pre-dyed yarns for the knitting process.

The blanket manufacturing part of the facility is nearly indentical to that of the Jordan Worsted Mills, purchasing pre-dyed woolen yarns for

knitting blankets. The only process wastewater generated from the facility is heavy scouring wastewater from washing the finished fabric. This wastewater contains dirt, impurities, and fabric fibers washed from the fabric and soap and soda ash used as washing agents. This batch-type wastewater is collected in a sump and pumped to a sewer discharging to a series of 12 concrete basins. Apparently some sedimentation occurs in the ponds but they are in poor repair, have earthen bottoms, and leak badly. Leakage and seepage from the basins flows to the Wadi al Ushsh which joins the Zarqa River about 1 kilometer downstream.

All process water requirements are supplied by a private well with elevated storage. A small amount of municipal water is purchased from Zarqa for drinking and sanitary purposes.

2.5.21 Jordan Electric Power Co.

The Jordan Electric Power Co. owns the Abdali Power Station in Awjan esh Sharqi. This facility was formerly used as an emergency stand-by generator station but has since been permanently removed from service and is presently being dismantled. This facility currently functions as a warehouse for the company. Typically 30 employees are present on the site during the day and two or three guards are present at night. There is no process wastewater produced at this facility.

2.5.22 Arab Thinner Factory

The Arab Thinner Factory is located near Clenkers, Ltd. and Jopolymer in Awjan esh Sharqi. The factory employs 4 and operates 8 hours/day, 6 days/week. The factory formulates paint thinner and turpentine. The manufacturing process is simply blending ingredients, requires no water and generates no wastes for disposal. The facility appeared clean with no evidence of spills.

2.5.23 Jordan Polymer and Intermediate Chemical Co. (Jopolymer)

Jopolymer operates a factory in Awjan esh Sharqi which formulates polyvinyl acetate (PVA) polymer and alkyd resins used in the manufacture of latex and oil-based paints, respectively. The facility employs 20 and operates 16 hours/day, 6 days/week. Annual production is approximately 3500 tonne of PVA polymer (50% water) and 1500 tonne alkyd resins.

The process wastewater generated by this facility is essentially the same as that of a latex paint formulators, namely tank wash water. The industry estimates the average quantity of wastewater generated to be 7-8 m^3/day with no wastewater discharged from alkyd resin manufacture.

The PVA tank rinse water is discharged directly to a small wadi which drains into the Zarqa River about 0.6 kilometers downstream of Jopolymer.

Process water requirements are supplied by water purchased from a private well located about 250 meters away. A small amount of municipal water is purchased from Zarqa for sanitary uses.

2.5.24 Clenkers, Ltd.

Clenkers operates a small paint formulation facility in Awjan esh Sharqi producing approximately 2 tonne/day latex paint and 3 tonne/day oil-base paint. The facility employs 12 and operates 8 hours/day, 6 days/week.

Similar to the other paint formulators in the Planning Area, the only process wastewater discharged is from tank cleaning. Tank cleaning wastewater is discharged to a cesspool separate from sanitary wastewater.

All process and sanitary water requirements are supplied by Zarqa municipal water.

2.5.25 International Leather Products Co.

International Leather Products Company operates a shoe manufacturing facility in Awjan esh Sharqi adjacent to the tannery and paper mill. This facility produces no process wastewater.

2.5.26 Jordan Fiberglass Co.

Jordan Fiberglass Company operates a fiberglass molded-product manufacturing facility along the Amman - Zarqa Highway in Awjan esh Sharqi. The facility employs 13, working 8 hours/day, 6 days/week. The manufacturing process uses no water and generates no wastewater. Zarqa municipal water is used for sanitary purposes.

2.5.27 Jordan Tiles Co.

Jordan Tiles Company operates a marble (terrazo) tile manufacturing facility in Awjan esh Sharqi. The facility employs 32, working 8 hours/day 6 days/week. Average production is estimated at 600 m^3/day.

The manufacturing process is essentially the same as that of Transjordan Minerals Research Co. with the only wastewater source from wet grinding and polishing. This process wastewater flow is estimated to average 100 m^3/day, all of which is discharged to two small earthen settling basins. The ponds receive a heavy solids load and have been observed to overflow into a drainage culvert under the Amman-Zarqa Highway. The ponds are reportedly dredged every 6 months and the inorganic solids disposed of in the desert.

Process water requirements are supplied by a neighbor's well and sanitary water requirements are supplied by Zarqa municipal water.

2.5.28 United Factories, Ltd.

United Factories, Ltd. operates on alcohol distillery in Awjan al Gharbi. In 1979 the plant producted 100 tonne of alcohol from the fermentation and distillation of molasses, dates, and sugar. Carbon dioxide gas is also recovered as a byproduct of fermentation, compresssed, and bottled. Operation is seasonal and depends upon the market. In 1979 the plant operated 6 months of the year with 27 employees and in 1978 it operated 11 months. When in operation, the plant operates continuously, 24 hours/day, 7 days/week.

The plant uses water for fermentation and distillation cooling. Following fermentation the fermented solution called "beer" is charged into the distillation column. After the distillation of the alcohol process, a residue remains which is referred to as "distillery slops" or "still bottoms". This distillery slop is actually a partially digested, "dealcoholized" solution of the raw material, be it sugar, molosses, or dates, and is a high strength wastewater. Industry estimates that an average of 36 m^3/day of this wastewater is discharged to the Zarqa River without treatment. Cooling water is recirculated through cooling towers.

The alcohol plant has its own private well as a process water source. Industry claims that the well water quality is often poor in the summer and they are forced to switch to municipal water supply. Zarqa municipal water is used for sanitary purposes as well.

2.5.29 Jordan Ceramic and Firebrick Co.

The Jordan Ceramic and Firebrick Company operates a facility in Awjan al Gharbi that produces earthenware pipes, red bricks, and firebricks. Water is used in mixing the clay and no wastewater is produced.

2.5.30 Imperial Company, Ltd.

Imperial Company, Ltd. operates a textile mill in Awjan al Gharbi which produces cotton and polyester underwear. The mill currently employs 60 workers and operates 8 hours/day, 6 days/week. Production averages about 500 kg/day.

Manufacturing processes employed at this mill are as follows:

- bleaching
- dying
- knitting

The knitting operation is dry requiring no water. The only wastewater generated is from the bleaching and dying processes. These are batch

46

processes performed once/day, usually in the morning. Approximately 2 m^3/day of spent dye and 3 m^3/day of spent bleach (calcium hypochlorite) solution are wasted. Following the batch dump, the dyed fabrics are rinsed resulting in about 25 m^3/day of wastewater. These process wastewaters are discharged directly to the Zarqa River without treatment.

Process water requirements are supplied by a shallow dug well and supplemented by municipal supply as necessary.

2.5.31 Arab Breweries Co. (Henninger)

The Henninger Brewery is located on the Zarqa-Ruseifa Road about 0.5 kilometers south of the Zarqa Bridge with the rear of the property bounded by the Zarqa River. The brewery employs about 50 workers and operates 8 hours/day, 6 days/week. Current beer production is approximately 30,000 hecto-liters/year (3,000 m^3/yr.).

Process water requirements are entirely from Zarqa municipal supply and are estimated as follows:

- brewing (3,000 m^3/yr.)
- bottle washing (18,000 - 29,000 m^3/yr)
- facility cleaning (700 - 1000 m^3/yr)
- compressor cooling (16,000 m^3/yr)

All process water is softened via anionic-cationic ion exchange units prior to use. According to municipal water meter reading, total water use average 141m^3/day. Compressor cooling water, accounting for approximately 45% of the wastewater flow, is not recirculated although uncontaminated. The other major process wastewater, bottle wash, accounts for about 53% of the average daily wastewater flow and contains residual beer, dirt, and caustic added for cleaning. Although the industry did not offer an estimate as to how much yeast solution is wasted from the fermentation process, it has been assumed to be on the same order as that from the Jordan Breweries Co., Ltd. (Amstel) or approximately 3 m^3 every 14 days. All process wastewater are discharged directly to the Zarqa River.

2.5.32 Jordan Breweries Co., Ltd. (Amstel)

The Amstel Brewery is located in Awjan al Gharbi immediately adjacent to the Henninger Brewery. The brewery employs about 70 workers and currently produces about 50,000 hecto-liters (5,000 m^3) of beer per year. The brewing line works 24 hours/day and the bottling line works 10 hours/day, 6 days/week.

The manufacturing process is essentially the same as the Henninger Brewery with the following differences:

- Brewing process water is treated by reverse osmosis.
- Brewing process water is from Zarqa municipal supply but a private well has been used on occasion.
- Compressor cooling water is recirculated through a cooling tower.
- A canning line is being added.

According to industry, the facility consumes 1.5 m^3 water per hectoliter of beer produced. This translates to 75,000 m^3/yr or approximately 240 m^3/day. This number is assumed to be correct, even though municipal water readings indicate the average daily flow to be about 162 m^3/day, because of the periodic use of the private well.

Process wastewaters (i.e. bottle wash, boiler blowdown, facility wash, and fermentation waste) are estimated at approximately 222.6 m^3/day. The bottle wash and facility wash wastewaters are discharged into a 12-inch sewer running through the property from the Eagle Distillery to the Zarqa River. The fermentation wastewater is discharged to a septic tank which overflows to the Zarqa River. The size of the septic tank is unknown but little or no sedimentation was observed during a waste dump that occurred during one of our on-site visits. The boiler blowdown is discharged to the Zarqa River via an open tile channel. Sanitary wastes are discharged to a cesspool located near the edge of the Zarqa River and it is anticipated that seepage from the cesspool reaches the river without sufficient purification.

Also on the brewery premises is a small liquor bottling operation. The only wastewater discharged from the liquor bottling operation is from bottle washing.

2.5.33 Eagle Distilleries Co.

The Eagle Distillery is located in Awjan al Gharbi on the Zarqa-Ruseifa Road directly across from the Amstel Brewery. The distillery produces alcohol from dates, molasses, sugar, raisins and grapes which is redistilled and processed into alcoholic beverages including arak, whisky, brandy, vodka and gin. The complex also has a winery producing wines and champagne, Carbonic (CO_2) gas is also bottled as a by-product from the fermentation process. The facility employs approximately 80 workers with the bottling line operating 8 hours/day, 6 days/week and the alcohol plant operating continuously 24 hours/day, 7 days/week. In 1979 the alcohol plant produced about 500 tonne of alcohol.

According to industry estimates, water consumption averages 5,000-6,000 m^3/ month of which approximately 2/3 is supplied by private well with the remainder from Zarqa municipal supply. When the well was originally constructed in 1972 its yield was sufficient to supply all process needs but the water level and yield have continually declined so that supplimental water is now required. Major water using processes are estimated as follows:

- fermentation (47 m^3/day)
- bottle wash, boiler make-up, misc. (107 m^3/day)
- distillation (alcohol plant), redistillation, and compressor cooling water (160 m^3/day)

Distillation cooling water is non-contact, once-through but approximately 2/3 is reused for bottle wash and boiler make-up. This recovers some of the heat value and reduces water consumption and wastewater flow but about 53 m^3/day is still discharged without reuse.

From a wastewater treatment stand point, the distillation slops are of primary importance due to the high BOD. This wastewater and the much lesser redistillation residue are estimated at approximately 48 m^3/day. All process wastewaters are discharged directly to the Zarqa River without treatment via a sewer of about 300 mm diameter which runs through the Amstel Brewery.

When dates are used for alcohol production, the seeds are screened from the mash prior to fermentation. The industry currently discards the date seeds but is investigating methods of grinding these for use as animal feed. Anis seeds from the redistillation process for arak production are also removed from the wastewater by screening.

A fusel oil seporator is used in the alcohol plant to remove amyl alcohols ("bad alcohol") from the product. Approximately 1 kg of fusel oil is separated from each ton of alcohol produced, or 250 kg/yr. This waste is a mild poison and is buried on site.

2.5.34 Zeidan Refrigeration Co. (Cortina Ice Cream)

Zeidan Refrigeration Company is located in Awjan al Gharbi next to the Eagle Distillery. The facility employs 20, producing ice cream bars from reconstituted milk and confections. Production is seasonal with operation beginning about mid-March and continuing through the end of October.

Compressor cooling water is recirculated through a cooling tower. The only wastewater from the manufacturing process is from process losses,

spillage, floor and tank wash. A caustic solution is used for tank and equipment cleaning.

All water requirements are supplied by Zarqa municipal water. Water meter readings indicate the average daily water use at 7.3 m^3/day. Process wastewater flow is estimated to average approximately 6.3 m^3/day.

2.5.35 Big Zarqa Mill Co.

The Big Zarqa Mill Company operates a grain mill located just south of the Zarqa Bridge. The only process water use is for grain damping and results in no wastewater flow. The mill employs approximately 70 and operates 24 hour/day, 6 days/week.

2.5.36 Jordan Petroleum Refinery

The Jordan Petroleum Refinery is located to the northwest of the City of Zarqa, outside the Planning Area. The refinery was visited and an industrial waste survey completed because of its anticipated impact on water use and water quality in the Planning Area.

The refinery processes approximately 5,000 tonne/day of crude oil into kerosene, gasoline, diesel fuel, jet fuel, white spirits, lube oil, LPG, and asphalt. All process and sanitary water requirements are supplied by 7 private wells. Three of the wells are normally operational, pumping an estimated average of 180 m^3/hr (4320 m^3/day) and a maximum of 288 m^3/hr.

Major process wastewater flows are estimated (by industry) as follows:

Process	Estimated Wastewater Flow (m^3/day)
Stripping steam columns	120
Vacuum distillation unit	55
Asphalt unit (contact cooling)	55
Non-contact cooling (w/recirc.)	380
Boiler blowdown	24
Ion-exchange water treatment eluate	120-150
Process clean and wash	Unknown

All oil-contaminated wastewater (i.e. stripping steam and some cooling water) goes to an American Petroleum Institute (API) separator for oil removal. API separator effluent is discharged to a series of 7 or 8 ponds located in the Wadi Sa'ida. The wastewater is pumped from the final pond to a 1-million gallon (3790 m^3) concrete-lined lagoon from which it is reused in the process. There is some overflow (amount unknown) from the pond system in the spring due to excess stormwater runoff.

Spent caustic (sour water) from hydrocarbon treatment is presently burned on the ground. Ion-exchange regeneration wastewater and cooling tower blowdown is used on-site for irrigation.

Around January 1980, a package sewage treatment plant was brought on-line to serve the offices, canteens, and approximately 60 residences on Refinery property. The package plant uses the extended aeration process and the effluent is chlorinated. The exact flow and capacity of the plant are not known but average daily flow is estimated to be on the order of 100 m^3/day.

The refinery operates continuously 24 hours/day, 7 days/week and employs 2200. The refinery also operates a foundary on-site which fabricates barrels, underground tanks, LPG cylinders, cans and drums for lube oil. Details on this facility were not made available.

3.0 PROJECTED INDUSTRIAL SETTING

3.1 ANTICIPATED GROWTH

As part of the industrial waste survey, existing industries were queried regarding plans for future growth and development. Most industries were optimistic that they would continue to grow but industrial planning rarely extended more than two or three years into the future. Most industries offered fairly definitive production plans through 1984, which is the target date for the start-up of the proposed Zarqa-Ruseifa sewerage system. For 1984 projections of water use, wastewater flows, and raw waste loads for existing industries, it was assumed that present levels per unit production would remain unchanged and production would increase according to estimates by industry. Projections beyond 1984 for existing industries were based upon the following assumptions:

- Production from existing industries would parallel Planning Area population growth until plant capacity was reached. For plants of unknown capacity, it was assumed capacity would be attained by the year 2000.
- Cooling water recycle and other water conservation measures would be implemented by the year 1990 for those industries served by the proposed Zarqa-Ruseifa sewerage system. Industrial sewer use charges based, at least in part, on flow were presumed to provide sufficient economic incentive for industries to do so.
- Raw waste loads per unit production were assumed to be the same as present.

New industrial development within the Planning Area was assumed to be confined to about 225 hectares of developable industrial-zoned land in Awjan esh Sharqi and another 90 hectares bordering on the northeast edge of Zarqa on the Refinery Road. Water use and wastewater flow projections for these developing industrial areas were based on average current industrial water use and wastewater flow per unit area with provisions for water conservation (i.e. 32.9 m^3/day/ha and 26.4 m^3/day/ha, respectively). Phosphate mining and beneficiation activities were excluded from the average per unit area calculation as a special case.

Similarly, raw waste load projections for the developing industrial areas are based on assumed BOD_5 and TSS concentrations of 800 mg/l at the projected wastewater flows. These concentrations are based on average concentrations from existing industries in the Planning Area exclusive of

the phosphate mill and paper mill wastewaters, which were considered to contain abnormally high suspended solids concentrations. A summary of projected industrial water use and wastewater flows is presented in Table I-3.1. Projected industrial raw waste loads are presented in Table I-3.2.

Using the same basic assumptions previously outlined, projections of industrial water demand from municipal supply is as follows:

	1980	1984	1990	2000
Average Daily Industrial Water Demand from Municipal Supplies (m^3/day)	680	1980	3520	6300

The above projected industrial water demand on municipal supplies assumes that all new industries will access water solely from municipal supplies and existing industries with private wells will continue to use them. Exceptions are the Eagle Distillery and Oriental Mineral Water Factory (7-Up) who have indicated that their wells are already operating at capacity.

Whatever water cannot be supplied by the municipalities to meet the projected industrial demand would have to be provided by new wells or water purchased from neighboring industrial wells. Due to projected water conservation measures, it is estimated that existing industrial wells in the Awjan esh Sharqi area could potentially reduce water demands on municipal supplies by the following amounts:

	1984	1990	2000
Excess capacity in Existing Awjan Sharqi Industrial Wells (m^3/day)	0	2010	1710

This assumes that the well are in the lower aquifer and yields would not decrease with time as has been observed in some wells.

The expense of constructing new wells and the time required to obtain a permit would almost certainly slow new industrial development if water demands cannot be met by municipal supply.

3.2 CONSERVATION MEASURES

The following industries were considered to consume excessive amounts of water relative to the production level and the manufacturing process(es) employed:

- Oriental Star Distillery
- Hussein Industry City Soap Factory

53

TABLE I-3.1 PROJECTED AVERAGE DAILY INDUSTRIAL WATER DEMAND AND WASTEWATER FLOW

INDUSTRY	WATER DEMAND (M^3/DAY)			WASTEWATER FLOW (M^3/DAY)		
	1984	1990	2000	1984	1990	2000
Ruseifa						
Yeast Industries Co. Ltd.	113	150	205	113	150	205
Jordan Phosphate Co.	4900	4900	4900	4630	4630	4630
Oriental Star Distillery	44*	28+	39+	44	32+	39+
Hussein Ind. City (I.C.A.)						
Detergent Factory	96*	96+	96+	78	78+	78+
Soap Factory	1515	99+	138+	1515	99+	138+
Ice Cream Factory	30*	16+	22+	25*	8+	11+
Cosmetic Factory	2	2	3	1	1	2
Paint Factory	3	4	6	3	4	6
Oriental Mineral Water Factories (7-Up)	200*	200	200	200	200	200
Transjordan Minerals Research Co.	4	5	8	1	1	2
Jordan Overall Co. Ltd.	17	1	1	17	1	1
Jordan Dairy Co. Ltd.	260	340	410	115	150	210
Jordan Worsted Mills	93	120	170	93	120	170
Sultan Plastics Co.	1	1	1	1	1	1
Subtotal	7278	5962	6199	6836	5475	5693

* Industry Projection

\+ MPI projection w/water conservation measures

TABLE I-3.1 (CONT'D) PROJECTED AVERAGE DAILY INDUSTRIAL WATER DEMAND AND WASTEWATER FLOW

INDUSTRY	WATER DEMAND (M^3/DAY)			WASTEWATER FLOW (M^3/DAY)		
	1984	1990	2000	1984	1990	2000
Awjan al Janubi						
Noralux Industrial Comm. Co.	3	4	8	2	5	7
Kholaghassi Foam & Mattress Fact.	23	30	95	<1	1	2
Cream Tex	10	13	21	10	13	18
Subtotal	36	47	124	13	19	27
Awjan esh Sharqi						
Jordan Tanning Co. Ltd.	700*	500+	690+	700*	500+	690+
Jordan Paper & Cardboard Co.	2540*	1530+	1530+	2310	1310	1390+
Jordan Iron and Steel Co. Ltd.	1260	130+	130+	1260	43+	43+
Jordan Ceramic Ind. Co. (CERAMCO)	80*	105	145	21	28	38
Jordan Match Co. (JOMCO)	8	11	15	7	9	13
Jordan Chemical Industries	96*	105+	150+	49	54	75
Jordan Army Blanket Factory	300*	300	300	300*	300	300
Jordan Electrical Power Co. (JEPCO) - Abdali Power Station	1	1	1	1	1	1
Arab Thinner Factory	1	1	1	1	1	1
Jordan Polymer and Intermediate Chemical Co. (JOPOLYMER)	33	43	60	9	12	16
Clenkers, Ltd.	6	6	6	12	12	12
International Leather Prod. Co.	2	3	5	2	3	5
Jordan Fiberglass Co.	<1	<1	<1	<1	<1	<1

* Industry Projection

\+ MPI Projection w/water conservation measures

TABLE I-3.1 (CONT'D) PROJECTED AVERAGE DAILY INDUSTRIAL WATER DEMAND AND WASTEWATER FLOW

INDUSTRY	WATER DEMAND (M^3/DAY)			WASTEWATER FLOW (M^3/DAY)		
	1984	1990	2000	1984	1990	2000
Awjan Esh Sharqi (Cont'd)						
Jordan Tiles Co.	130	170	240	100	130	180
New Industrial Development	740	1850	3700	585	1460	2930
Subtotal	5898	4756	6974	5358	3944	3695
Awjan al Gharbi						
United Factories, Ltd.	40	52	72	36	47	65
Imperial Underwear Co.	37	37	37	37	37	37
Arab Breweries Co. (Henninger)	160	140+	140+	150	135+	135+
Jordan Brewery Co. Ltd. (Amstel)	340*	290+	290+	310	260+	260+
Eagle Distilleries	212*	215+	300+	210*	210+	290+
Zeidan Refrigeration Co. (Cortina)	7	9	12	4	5	7
Big Zarqa Mill	7	9	12	2	2	3
Subtotal	803	752	863	749	696	797
Zarqa						
Jordan Ceramic and Firebrick	8	11	15	<1	1	1
New Industrial Development	296	740	1480	230	580	1170
Subtotal	304	751	1495	231	581	1171
TOTAL (Study Area)	14,319	12,268	15,229	13,187	10,715	13,384

* Industry projection

\+ MPI projection w/water conservation measures

TABLE I-3.2 SUMMARY OF PROJECTED INDUSTRIAL RAW WASTE LOADS

INDUSTRY	POLLUTANT LOAD (KG/DAY)									
	BOD_5			TSS			OTHER			
	1984	1990	2000	1984	1990	2000	Parameter	1984	1990	2000
Ruseifa										
Yeast Industries Co.	300	390	540	100	130	180	*	*	*	*
Jordan Phosphate Co.	*	*	*	686,000	686,000	686,000	*	*	*	*
Oriental Star Distillery	10	10	12	10	10	12	*	*	*	*
Hussein Industrial City										
Detergent Factory	3	4	5	3	4	5	*	*	*	*
Soap Factory	100	130	180	20	34	65	COD	290	340	470
							Oil & Grease	7	8	11
Ice Cream Factory	41	53	74	16	21	29	*	*	*	*
Cosmetics Factory	*	*	*	*	*	*	*	*	*	*
Paint Factory	*	*	*	5	6	8	*	*	*	*
Oriental Mineral Water Fact.	550	550	550	270	270	270	*	*	*	*
Jordan Overall Co.	*	*	*	*	*	*	*	*	*	*
Jordan Dairy Co.	520	680	940	210	280	380	*	*	*	*
Jordan Worsted Mills	54	71	98	360	470	650	Oil & Grease	13	17	23
Subtotal	1,578	1,888	2,399	686,994	687,225	687,599	*	*	*	*
Awjan esh Sharqi										
Jordan Tanning Co.	770	930	1,280	930	1,130	1,560	Sulfide	280	340	470
							Oil & Grease	120	140	200
							Chromium	32	39	54
Jordan Paper & Cardboard	500	300	300	6,080	3,660	3,660	*	*	*	*
Jordan Iron & Steel Co.	*	*	*	310	310	310	Oil & Grease	50	50	50
Jordan Match Co.	*	*	*	*	*	*	*	*	*	*
Jordan Chemical Ind.	*	*	*	340	370	510	Mercury	0.72	0.78	1.09
							NaCl	550	600	830
Jordan Army Blanket	180	180	180	500	500	500	*	*	*	*
Jordan Polymer	*	*	*	*	*	*	*	*	*	*
Clenkers, Ltd.	*	*	*	36	36	36	*	*	*	*
New Industrial Development	470	1,170	2,340	470	1,170	2,340	Unk	Unk	Unk	Unk
Subtotal	1,920	2,580	4,100	8,666	7,176	8,916	*	*	*	*
Awjan al Janubi										
Noralux Ind. Comm. Co.	*	*	*	4	5	7	*	*	*	*
Cream Tex	5	7	10	2	2	4	*	*	*	*
Subtotal	5	7	10	6	7	11	*	*	*	*
Awjan al Gharbi										
United Factories, Ltd	1,000	1,310	1,810	1	2	3	*	*	*	*
Imperial Underwear	18	24	33	6	7	10	*	*	*	*
Arab Breweries Co.	135	200	200	52	77	77	*	*	*	*
Jordan Brewery Co., Ltd	270	380	380	110	150	150	*	*	*	*
Eagle Distilleries	1,400	1,830	2,520	17	22	31	*	*	*	*
Zeidan Refrigeration Co.	4	5	7	2	2	3	*	*	*	*
Subtotal	2,827	3,749	4,950	188	260	274	*	*	*	*
Zarqa										
New Industrial Development	190	470	940	190	470	940	Unk	Unk	Unk	Unk
Subtotal	190	470	940	190	470	940	-	-	-	-
TOTAL (STUDY AREA)	6,520	8,694	12,399	696,044	695,138	697,740	-	-	-	-

* - Negligible

Unk - Unknown

- Jordan Tanning Co., Ltd.
- Jordan Paper and Cardboard Co.
- Jordan Iron and Steel Industry Co.
- Arab Breweries Co., Ltd.
- Jordan Brewery Co., Ltd.
- Eagle Distilleries

Most of these industries listed above consume large amounts of water for cooling purposes. The cooling water is discharged with little or no recycle or reuse resulting in large volumes of uncontaminated or slightly contaminated effluent. As evidenced by Table I-2.2, once-through cooling water represents about 21% of the total present industrial wastewater flow. This could be substantially reduced by, recirculation through cooling towers or spray cooling ponds, or by reuse in the process. Furthermore, a lot of valuable energy is wasted in the form of heat. Some of this energy could be reclaimed if the cooling water is reused for: preheating process stream via heat-exchangers; boiler make-up water; or for space heating requirements.

Nearly all the industries employing once-through cooling water acquire water from private wells. The industries consider the water from private wells essentially free and thus have no economic incentive to reduce water usage. One method of supplying an economic incentive to industries for water conservation is to require all cooling water to be discharged with process wastes to the proposed sewerage system. Another method is to implement a withdrawal charge on all industrial wells based on water consumption. The problem with the concept of a withdrawal charge is that it may shift an unreasonable burden on the already overextended municipal water systems. The large water-consuming industries which do not use large amounts for cooling water would be unduly penalized as they would be forced to pay a premium for both water use and wastewater treatment.

In general, it is not considered advantageous to discharge once-through non-contact cooling water to the sewerage system since it requires no treatment and occupies capacity. However industrial sewer use charges should provide sufficient economic incentives to induce industries to recycle cooling water. Water use and wastewater flow projections reflect this assumption.

Special cases where excessive water consumption is process related are the Jordan Brewery Co., Jordan Paper and Cardboard, and Jordan

Tanning Co.. These industries are individually discussed below.

3.2.1 Jordan Brewery Co.

Industry representatives have estimated current average water consumption at 1.5 m^3/hecto-liter beer produced. The industry has also estimated that water consumption could be reduced to approximately 1.3 m^3/hecto-liter by "good housekeeping". We have furthered the projected conservation impact by assuming that the industry will attain the U.S. brewing industry mean raw waste volume per unit production of 0.83 m^3/hecto-liter (Reference 2) by the year 1990.

3.2.2 Jordan Paper and Cardboard Co.

The paper mill currently uses approximately 115 m^3 of water per tonne of paperboard produced. This is nearly 3 times the water consumption of the average paperboard mill in the United States using 41.7 m^3/tonne (Reference 1). This is attributed primarily to the following factors:

- o insufficient pump capacity in paper machine internal recycle lines.
- o the straw-pulp wash system.
- o undersized "save all" in poor condition with no provision for water reuse.

There are numerous methods of reducing water use and wastewater flow in a paper mill by reusing and/or recycling wastewater. In fact, several waste paper board mills in the United States have attained zero discharge of process wastewater by clarification and extensive recycle (Reference 1). Some of these conservation measures will be described briefly below.

Other than direct recycle of whitewater to the wet-end of the paper machine or to hydropulping, most recycle and reuse schemes depend upon the use of a "save-all" or clarifier. These are considered by many mills to be a necessity for both economic and pollution control reasons. These will be discussed in Chapter 4 as pretreatment alternatives to reduce TSS and BOD_5 loads to treatment but their value to water conservation and wastewater flow reduction are significant in that the clarified effluent can be reused for such services as:

- o vacuum pump seals
- o machine showers
- o stock cleaner elutriation
- o cooling waters

59

- o pulp washing
- o facility cleaning
- o consistency dilution water

Jordan Paper and Cardboard presently has a "save-all" but it is undersized and in poor condition. As such, only a portion of the white-water is pumped to the "save-all" and the effluent is not of adequate quality for reuse.

Jordan Paper and Cardboard is presently investigating the use a counter-current straw-pulp (blackwater) wash system that is anticipated to substantially reduce the water consumption and wastewater flow from that operation. However, it is also anticipated that the resulting blackwater will be more concentrated, making equalization an important pretreatment process.

3.2.3 Jordan Tanning Co., Ltd.

The tannery currently uses approximately 108 m^3 water per tonne of hides processed. This is considerably higher than the average water use per unit production by similar tanneries in the United States (i.e. 63 m^3/tonne) (Reference 3). Consequently it has been assumed that the tannery will attain the average U.S. water use per unit production by the year 1990 by instituting conservation measures. Water use and waste-water flow projections reflect this assumption.

3.3 DISCUSSION BY SPECIFIC INDUSTRY

Brief discussions on major planned expansions of existing industries follows.

3.3.1 Jordan Phosphate Mines Co., Ltd.

Jordan Phosphate has already initiated plans to build a new beneficiation plant south of the Amman-Zarqa Highway and to the east of the area actively being mined. The existing beneficiation plant and dryers will be removed from service when the new facilities are completed sometime in 1983.

Pilot-scale evaluations are being conducted for the following alternative beneficiation processes under consideration for the new mill:

- o flotation
- o washing and calcination
- o combination of the above

60

The wastewater characteristics of wastewater from these beneficiation processes are somewhat different from those from the existing facility employing only wet screening, hydrosizing and drying.

Flotation wastewat..s contain residual concentrations of flotation reagents, typically tall or rosin oil and amines, and have a modified pH (may be either acidic or alkaline). Acidic conditions may increase the dissolved concentrations of phosphorus, fluorine, and trace elements such as vanadium and uranium in the wastewater. These wastewaters are typically treated by coagulation and sedimentation in tailings ponds often preceded by mechanical clarifiers/thickeners (Reference 4).

Calcination produces defluorinated rock, used in cattle feed supplements, by heating in rotary kilns. The following reactions summarizes the process (Reference 5):

$$CaF_2 \cdot 3\,Ca_3(PO_4)_2 + H_2O + SiO_2 \xrightarrow[\Delta]{1400\text{-}1500^\circ C} 3Ca_3(PO_4)_2 + CaSiO_3 + 2HF\uparrow$$

$$CaCO_3 \xrightarrow[\Delta]{1400\text{-}1500^\circ C} \underset{\text{(lime)}}{CaO} + CO_2\uparrow$$

As evidenced by these reactions, hydrofluoric acid and lime are byproducts of the process. These compounds may be recovered but typically are discharged with the wastewater where the hydrofluoric acid is neutralized by the free lime and precipitated as calcium fluoride.

A new tailing slime disposal area is to be located in the Wadi al Ushsh approximately 2.9 km south of the Amman-Zarqa Highway. The slime disposal area will receive wastewater from the planned beneficiation plant with a design flow of about 300 m^3/hour. Phosphate reserves are estimated to keep this facility in operation at least 15 years.

3.3.2 Hussein Industrial City

Hussein Industrial City is in the process of expanding several of its product lines. Planned expansions are as follows:

- A new detergent plant is under construction. The manufacturing process is identical to that of existing plant and will double current detergent production levels.

61

- The soap factory plans to add another bar soap production line with a production capacity of 1.5 tonne/hour by 1981. The manufacturing process is identical to the existing line. With a planned production schedule of 8 hr/day, water use and wastewater flows are anticipated to increase proportionately with production (i.e. an increase of 140%).

3.3.3 Oriental Mineral Water Factories

Plans are to underway increase production 6-fold by installing a new bottling line sometime in 1981. Water use will be approximately double present level, or 25 m^3/hr. Wastewater flow will correspondingly double as well. Increased water demand will likely come from municipal supply as the private well is already overtaxed.

3.3.4 Jordan Overall Co., Ltd.

Jordan Overall plans to build a new production facility in Zarqa industrial development within 5 years. When the new facility is completed, the existing facility will be converted to a warehouse.

3.3.5 Jordan Tanning Co., Ltd.

The tannery plans to expand clothing leather production by about 8% within 2 years.

3.3.6 Jordan Paper and Cardboard Co., Ltd.

Jordan Paper and Cardboard plans to increase pulping capacity from 6,000 tonne/yr to 10,000 tonne/yr with existing machines.

3.3.7 Jordan Iron and Steel Industry Co., Ltd.

A new rolling mill is currently under construction in Awjan esh Sharqi adjacent to the existing plant. The new facility will use billet steel produced by the existing melt plant to make flat stock and construction shapes (i.e. "T's", "U's", and angles). The new facility is lumped under "new industrial development" for Awjan esh Sharqi.

3.3.8 Jordan Distilled Chemical Co.

Jordan Distilled Chemical plans to add two more mercury cells to the existing number of ten within 1 year.

3.3.9 Jordan Army Blanket Factory

The blanket factory plans to double production and water usage within two years by working two shifts per day.

62

3.3.10 Clenkers, Ltd.

Clenkers plans to double production this year by working two shifts per day.

3.3.11 Jordan Ceramic and Firebrick Co.

A new factory is currently under construction in the new Zarqa industrial development area off the Refinery Road. When the new facility is completed around July 1980, the existing facility will be abandoned. There will be no process wastewater discharged from the new facility.

3.3.12 Eagle Distilleries

Eagle Distilleries is presently working on a licence for shampoo and cosmetics manufacture.

4.0 ALTERNATIVE APPROACHES TO INDUSTRIAL WASTEWATER MANAGEMENT

4.1 STRATEGIES

Three major alternative strategies or approaches to industrial wastewater treatment and control appeared to have applicability and were evaluated for the Zarqa-Ruseifa area:

- Joint industrial - municipal treatment with individual industrial pretreatment, where appropriate.
- Joint industrial - municipal treatment with "centralized" pretreatment facilities.
- Individual industrial treatment with direct discharge to the river or wadi.

In the evaluation of these strategies, several types of criteria were considered:

- Industrial wastewater characteristics and compatibility with treatment system.
- Environmental/health.
- Regulatory.
- Costs.

The industrial wastewaters in the Zarqa-Ruseifa area seem to be highly variable relative to volume and organic constituents. As will be discussed in more detail later, there are also some industrial wastewater characteristics which require carefull control to protect the integrity of the sewers and/or to maintain stability in the treatment processes.

The potential environmental impact of industrial discharges on the present and intended downstream uses of surface and groundwater supplies could vary depending on the strategy used. For instance, the protection of surface water dissolved oxygen levels will be important to control odors. Excessive amounts of heavy metals could reduce the value of the wastewaters for irrigation. Sanitary wastewaters from industrial sites also must be controlled to protect public health.

The location of any industrial treatment and/or pretreatment facilities may impact land use and zoning regulations. Since many industries are located in the river bed, the only available land may be in agricultural use.

The major regulatory issue centers on the ease of implementation, administration and enforcement of any industrial wastewater strategy.

64

A strategy which is inexpensive to build but difficult to enforce should be avoided.

All of the above criteria have cost implications to both the industries and the Municipalities of Zarqa and Ruseifa. Treatment of industrial wastewaters will increase municipal costs, but also will provide a major source of revenue particularly in the early years of treatment plant operation. Pretreatment and treatment facilities for industrial wastewaters will require land; depending on the location of the land, the cost will vary. The degree to which the environment is protected also will affect costs. For instance, the higher the levels of dissolved oxygen maintained in the surface waters, the higher the industrial and municipal treatment costs.

Enforcement of regulations and overall administration of the industrial wastewater management program will vary in cost depending on the strategy utilized. Many of these costs could be allocated to the industries.

Overall, the development of the recommended strategy for the Planning Area will consider what is appropriate for both nearterm and long-range implementation. Hence, consideration also will be given to an integrated approach employing variations on the major alternative strategies.

4.1.1 Joint Industrial-Municipal Treatment With Individual Industrial Pretreatment

From a cost point-of-view, it generally is considered to be more economical to treat all compatible wastewaters in one location than to treat in many locations. As long as the cost of wastewater collection is reasonable, joint industrial-municipal wastewater is generally cost-effective.

However, industrial wastewaters often are quite variable, contain excessive acidity or alkalinity, contain constituents which may create a hazardous environment in sewers, cause damage to pipes, or upset treatment processes. Whether the wastewaters are treated by the industry or the municipality, the above undesirable characteristics should be controlled.

For instance, equalization of the industrial wastewaters may reduce the ratio of peak to average flows at any treatment facility. In a joint industrial-municipal system, equalization facilities for industrial wastewaters could be operated so that the industrial wastewaters arrive at the joint treatment facilities during the night when domestic wastewater flow and waste load is at a minimum.

If each industry were to undertake all of its necessary pretreatment, there would be a large number of facilities requiring monitoring and the municipalities would have to rely heavily on the industries to accomplish the desired pretreatment. However, the municipalities would only direct the industry to install its own pretreatment facilities; it would not have to direct the design, construction and day-to-day operation of the facilities.

The advantages and disadvantages of individual pretreatment are summarized below:

Individual Pretreatment

Advantages	Disadvantages
1. Clear allocation of industrial responsibilities and costs.	1. Higher unit costs of treatment.
2. More adaptable to changes in production and manufacturing processes.	2. Requires more surveillance by municipalities. Less direct control over flow variations.
3. Potential for more efficient treatment for special pollutants of concern.	3. Needs more skilled operation personnel.
4. Easier to implement.	4. More industrial pretreatment facilities located near more residents. Potential for more odors.

4.1.2 Joint Industrial-Municipal Treatment With "Centralized" Pretreatment

In the context of this report, "centralized" pretreatment refers to the handling of wastewaters from two or more industries in a pretreatment facility under the direct control of the municipalities. Given the rugged terrain, lack of large tracts of land in the Zarqa River Valley and large distances separating industries, more than one "centralized" pretreatment facility must be considered. The major considerations for the "centralized" pretreatment strategy are:

- Equalization control
- Chemical compatibility of waste streams
- Industry location and land availability.

With this approach, the municipalities would have greater control over the entry of industrial wastewaters into the sewerage system. Also in some cases, acid and alkaline wastes would be neutralized by mixing. This would reduce operating costs and reduce the input of salts into the wastewaters somewhat.

Upon examination of Figure I-2.1, five major industrial zones in the Planning Area are apparent. Each of these zones lends itself to the establishment of a centralized pretreatment facility. These major industrial zones will be referred to throughout the remainder of this report as follows:

- Ruseifa
- Awjan al Janubi
- Awjan al Gharbi
- Awjan esh Sharqi
- Zarqa (Northwest)

The availability of land in each of those zones is an important consideration. The advantages and disadvantages of the centralized pretreatment approach are summarized below:

Centralized Pretreatment

Advantages	Disadvantages
1. Economy of scale	1. Difficulty in equitable allocation of industrial responsibility and costs.
2. Requires less intensive surveillance by municipalities.	2. Potential for reduced treatment efficiency and/or increased costs for special pretreatment processes.
3. More effective equalization of flows, organic loads, acidity and alkalinity.	3. More difficult to implement.
4. Requires fewer skilled operations personnel.	4. Less adaptable to major changes in production and manufacturing processes.

4.1.3 Individual Industrial Treatment With Direct Discharge

In general joint industrial-municipal treatment is preferred over the direct discharge of treated industrial wastewaters. Economies of scale, cost savings to both industrial and municipal users, the need for surveillance and monitoring, and the need for fewer wastewater treatment operators can all be expected to generally favor joint treatment. While individual industrial wastewater treatment with direct discharge of treated effluent has been considered for each industry, only those which offer significant benefits over other strategies will be presented. Factors which could favor direct discharge include the following:

- Industrial locations distant from populated areas or other industries.
- Industrial wastewaters requiring minimal or no treatment

67

- "Pretreatment" for toxic inorganic pollutants would result in an effluent acceptable for discharge without further biological treatment at the joint industrial-municipal treatment facility.

In some parts of the Planning Area, it may not be cost-effective to provide an interceptor sewer in the first phase of the overall project. Similarily, it would be an inappropriate use of resources to provide sewers to collect modest flows from industries located distant from the populated areas which will be served initially.

Also some industries may have wastewaters which require minimal treatment prior to discharge. If these wastewaters were discharged to the river or wadi, they could possibly satisfy some local irrigation needs.

Another special case for possible direct discharge is non-contact cooling water. Cooling water represents about 21 percent of the total present industrial wastewater flow. Non-contact cooling water usually is recirculated or once-through. Recirculated cooling water usually is blowdown (bled-off) to control the build up of salts or other undesireable materials. If significant amounts of algacide or water conditioning chemicals are used this water may have to be sewered.

In general, it is considered advantageous to segregate once-through non-contact cooling water from process wastewater and discharge it directly to the river or wadi. These cooling waters require no treatment and would use capacity in the sewerage system. The problem with this approach is that it discourages water conservation.

One method of supplying an economic incentive to industries for water conservation is to require all cooling water to be discharged with process wastes to the proposed sewerage system. The cost associated with treating this water would be passed on to the industry and it is assumed that this approach would result in the desired conservation measures. The sewerage system should have no problem in assimilating cooling water flows during the initial phase of the project as industries are presumably implementing cooling water recycle and other conservation measures.

4.2 INDIVIDUAL PRETREATMENT

4.2.1 Description

After reviewing the industrial wastewater characterizations, flows, and loads presented in Chapter 2, industries requiring pretreatment were identified. Individual pretreatment requirements were established for

each industry identified. Table I-4.1 summarizes industrial pretreatment candidates and the pretreatment processes investigated for each industry. Industries not listed on Table I-4.1 are either candidates for individual treatment and direct discharge or require no pretreatment.

4.2.1a Equalization

Equalization was considered for all industries with significant fluctuations in one or more of the following:

- o flow
- o pH
- o concentrations
  - organics (BOD, COD)
  - suspended solids
  - toxic or treatment-inhibiting substances

An industrial operations summary with estimated flow variability is presented in Table I-4.2. Examination of the table shows approximately 65 percent of the industries, accounting for nearly 50 percent of the total industrial flow to the proposed industrial-municipal treatment plant, operate only 8 hours per day. The estimated peak-to-average flow ratios are as high as 24:1.

A typical diurnal sewage flow pattern is illustrated in Figure I-4.1. When unequalized industrial flows from the Planning Area are superimposed on this diurnal sewage flow pattern, the peak flow periods (i.e., 9 AM to 3 PM) coincide. The net effect would be to increase the daily peak-to-average flow ratio at the treatment plant from 2:1 to approximately 2.25:1. With equalization and constant discharge of industrial flows the ratio could be reduced to approximately 1.9:1. By pumping more flow during the night time, the ratio could be reduced further.

Aeration is suggested for all equalization basins with strong liquors (i.g. high BOD) in order to keep the wastewater from going septic. Aerated equalization has an additional benefit of reducing BOD and sulfide concentrations. Aeration has been considered for the following:

- o Eagle Distillery
- o Arab Breweries Co.
- o Jordan Breweries Co.
- o Jordan Tanning Co.

Any equalization of the Eagle Distillery wastewater will require aeration because of its location near population centers and its high organic (BOD) content. The use for aeration for the tanning wastes will

TABLE I-4.1 SUMMARY OF INDUSTRIAL PRETREATMENT CANDIDATES AND PRETREATMENT PROCESSES INVESTIGATED

INDUSTRY	PRETREATMENT PARAMETERS	PRETREATMENT PROCESSES INVESTIGATED
Hussein Industrial City	Flow/Conc. Variability	Equalization
	pH	Neutralization
Oriental Mineral Water Fact.	Flow Variability	Equalization
Jordan Overall Co., Ltd.	Flow/Conc. Variability	Equalization
	pH	Neutralization
Jordan Dairy Co., Ltd.	Flow/Conc. Variability	Equalization
Jordan Worsted Mills	Flow/Conc. Variability	Equalization
	Suspended Solids	Screening
Jordan Tanning Co.	Flow/Conc. Variability	Equalization
	pH	Neutralization
	Chromium	Chemical Precipitation, Flocculation
	Oil & Grease	Sedimentation, Sludge Dewatering and Disposal
	Suspended Solids	Screening
Jordan Paper & Cardboard Co.	Flow/Conc. Variability	Equalization
	Suspended Solids	Screening (Save-all), Sedimentation
Jordan Iron & Steel Co.	Suspended Solids	Sedimentation
	Oil and Grease	Oil & Grease Skimmer
Jordan Distilled Chemical Co.	Suspended Solids Mercury Dissolved Solids	Sedimentation Sulfide Precipitation and Recovery Impoundment/ Evaporation
Jordan Army Blanket Factory	Flow/Conc. Variability Suspended Solids	Equalization, Screening
Eagle Distilleries	pH	Equalization, Neutralization
Arab Breweries Co. Ltd	Flow/Conc. Variability	Equalization
Jordan Breweries Co. Ltd	Flow/Conc. Variability	Equalization

TABLE I-4.2 INDUSTRIAL OPERATIONS SUMMARY AND ESTIMATED FLOW VARIABILITY

INDUSTRY	OPERATION			WASTEWATER FLOW VARIABILITY			
	HOURS DAILY	DAYS WEEK	TYPE OF OPERATION (BATCH/CONT.)	AVE.DAILY FLOW (M^3/DAY)	PEAK/AVE. FLOW FACTOR	MIN./AVE. FLOW FACTOR	MAX. DAILY FLOW (M^3/DAY)
Awjan al Janubi							
Noralux Ind. Comm. Co.	8	6	Batch	1.6	4.8	-	-
Kholaghassi Foam and Mattress	8	6	Sanitary Only	0.5	-	-	-
Cream Tex	8	6	Batch	9.6	27.0	0.0	-
Awjan al Gharbi							
United Factories Ltd.	24	7	Cont.(Seasonal)	36	1.2	0.0	-
Imperial Underwear Co.	8	6	Batch	31.2	23.0	0.0	-
Arab Breweries Co.	8	6	Batch	131	2.5	0.34	-
Jordan Breweries Co.,Ltd.	24	6	Batch	224	2.5	0.0	-
Eagle Distilleries	24	7	Cont./Semi-Cont.	209.5	1.2	0.0	-
Zeidan Refrigeration Co.	[illegible]	6	Batch	6.7	4.7	0.1	-
Big Zarqa Mill	24	6	Sanitary Only	1.4	-	-	-
Awjan esh Sharqi							
Jordan Tanning Co.	8	6	Batch	650.0	7.0	0.0	800.0
Jordan Paper & Cardboard	16	6	Cont.	1937.0	2.2	0.0	3230.0
Jordan Iron & Steel Co.	24	6	Cont.	1257.0	1.2	0.0	-
Jordan Ceramic Ind. Co.	8	6	Cont.	30.0	3.0	0.0	33.0
Jordan Match Co.	8	6	Batch	7.0	20.0	0.0	-
Jordan Chemical Ind.	24	7	Cont./Batch	41.2	13.0	-	50.0

TABLE L-4.2 (CONT'D.) INDUSTRIAL OPERATIONS SUMMARY AND ESTIMATED FLOW VARIABILITY

INDUSTRY	OPERATION			WASTEWATER FLOW VARIABILITY			
	HOURS DAILY	DAYS WEEK	TYPE OF OPERATION (BATCH/CONT.)	AVE.DAILY FLOW (M^3/DAY)	PEAK/AVE. FLOW FACTOR	MIN./AVE. FLOW FACTOR	MAX. DAILY FLOW (M^3/DAY)
Awjan esh Sharqi (Cont'd)							
Jordan Army Blanket	8	6	Semi-Cont.	150	10.0	0.0	-
Jordan Electric Power Co.	24	6	Sanitary Only	-	-	-	-
Arab Thinner Factory	8	6	Sanitary Only	0.8	-	-	-
Jopolymer	16	6	Batch	8.8	16.0	0.0	-
Clenkers Ltd	8	6	Batch	6.2	24.0	0.0	-
Int'l Leather Prod.	8	6	Sanitary Only	2.4	-	-	-
Jordan Fiberglass	8	6	Sanitary Only	0.3	-	-	-
Jordan Tiles Co.	8	6	Cont.	100.8	3.0	0.0	-
Ruseifa							
Yeast Industries Co.	24	6	Cont.	113.0	1.25	0.0	-
Jordan Phosphate Co.	24	6	Cont.	1680.0	1.3	0.8	-
Oriental Star Distillery	8	6	Batch/Cont.	29.4	2.7	0.0	-
Hussein Industrial City							
Detergent Factory	16	6	Batch/Cont.	39.0	8.0	0.0	-
Soap Factory	8	6	Batch/Cont.	104.0	3.6	0.0	-
Ice Cream Factory	8	6	Batch/Cont.	24.6	4.7	0.8	-
Cosmetic Factory	8-16	6	Batch	0.8	12.0	0.0	-
Paint Factory	8	6	Batch	3.0	24.0	0.0	-
Oriental Mineral Water	8	6	Cont.	93.0	3.0	0.0	-
Transjordan Mineral Research	8	6	Sanitary Only	0.2	-	-	-
Jordan Overall Ltd.	8	6	Semi-Cont.	17.0	17.0	0.35	-
Jordan Dairy Co.	16	6	Batch	101.9	6.0	0.0	-
Jordan Worsted Mills	16	6	Semi-Cont.	93.0	12.0	0.0	-
Sultan Plastic Co.				0.6	-	-	-

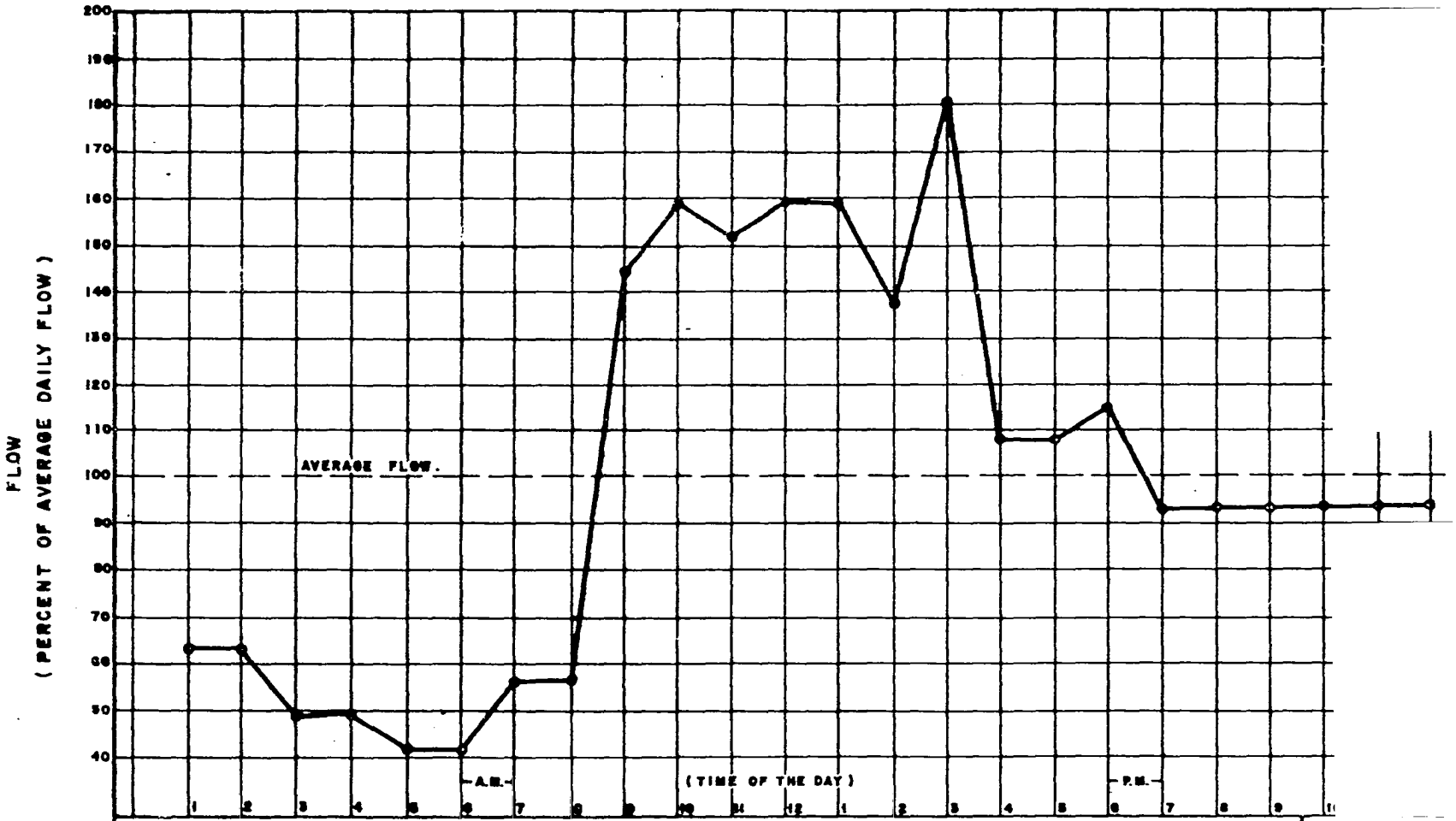

SE PA SEWAGE PLANT FIGURE I-

SOURCE :" al c r City of Zarc esign Report,
r an 5 .

73

be based primarily on economics since aeration of the wastewater will not completely remedy its odor problems; some aeration also is anticipated to occur from the other physical operations being performed (i.e., pumping, screening, mixing, overflowing weirs). The use of aeration in the equalization of brewery wastes will also be based on economics; the high strength fermentation wastes of concern are of low volume and intermittent (e.g., 3 m^3 at an average frequency of about once every 2 weeks at the Jordan Breweries Co.).

4.2.1b Neutralization

It appears that individual equalization will obviate the need for neutralization at the following industries which discharge acidic wastewater (i.e., pH 5.5).

- Hussein Industrial City
- Jordan Overall Ltd.
- Jordan Diary
- Eagle Distillery
- United Factories, Ltd.

This can be accomplished since these industries also discharge alkaline wastewater which will be combined with acidic wastewaters in the equalization basin. Since equalization is not required to dampen flow and concentrations at the Eagle Distillery, the recommendation to neutralize or equalize will be based on economics.

4.2.1c Screening

Fine screening is considered a necessary pretreatment for the textile industries (i.e., Jordan Worsted Mills and Jordan Army Blanket Factory), and the tannery. The economics of screening of paper mill wastewater are also being evaluated as an alternative to mechanical clarification. The wastewater from these industries contains large amounts of suspended solids, most of which are easily removed by fine screening due to their coarse nature. Most of the suspended solids at the textile mills are in the form of wool fibers; at the tannery-hair and flesh; and at the paper mill-pulp fibers. These solids should be removed for the following reasons:

- To prevent clogging and fouling of pipes, pumps, and mechanical mixing equipment.
- To reduce suspended solids and associated BOD load to the treatment plant.
- To prevent operational problems in the treatment plant due to floating solids.
- To produce a saleable or reuseable by-product.

4.2.1d Chromium Removal

After reviewing the industrial effluent data, it appears that the Jordan Tanning Co., Ltd. discharges a significant amount of chromium. Currently, some chromium is captured in existing unlined holding ponds on the company property.

If the amount of chromium in the raw tannery wastewater were discharged to the proposed sewerage system, it would result in an estimated average of 1.7 mg/l of chromium in the influent to the joint industrial-municipal treatment system in 1984. This year is expected to have minimum dilution wastewater available from municipal and industrial sources.

The impact of the chromium was briefly evaluated relative to:

- Potential inhibition of the activated sludge process
- Potential inhibition of anaerobic digestion process
- Impact on irrigation uses of water
- Impact on surface water quality

The estimated average influent chromium concentration to treatment is well below the threshold process influent concentration for inhibition of activated sludge processes (Reference 6). This assumes that all potential chromium sources have been identified.

Furthermore, with an estimated chromium removal of 40 percent in the proposed joint industrial-municipal wastewater treatment plant (Reference 6) the chromium content of the joint treatment (from the tannery alone) would be close to the U.S. median of 890 mg/kg (dry wt. basis) (Reference 6). Assuming that other inputs of chromium will occur, it is estimated that the sewage sludge would contain higher than normal amounts of chromium if the tannery wastes were not pretreated. This chromium content might affect the anaerobic digestion process,at least on occasion. Also the digested sludge might have less value as a soil conditioner.

If 60 percent of the chromium is passed through the joint treatment plant, about 1.0 mg/l of chromium could be expected in the effluent. Chromium solubility considerations lend additional credence to the estimated effluent concentration as the solubility of trivalent chromium varies from approximately 0.77 mg/l to 2.0 mg/l over the pH range of 7.6 (Reference 7), observed at the Amman Sewage Treatment Plant (Reference 8).

75

Approximately 3 km^2 of irrigable land is located between the proposed treatment plant site and As Sukhnah Spring with considerably greater areas downstream of the confluence of the Zarqa River and the As Sukhnah Spring (Reference 9). Assuming irrigation water demand to be 1800 m^3/donums/year for the 200 day irrigation season (Reference 9), the chromium application rate would be approximately 10.5 kg/hectare/year using treatment plant effluent. At this application rate, maximum recommended chromium addition to the soil (Reference 10) would be attained in about 20 years, after which the soil may be rendered less useful for agricultural purposes unless special agricultural management practices were implemented. This is not considered to be acceptable.

The impact of the chromium content of the proposed joint treatment plant effluent on the King Talal reservoir was also considered. Assuming the worst case with no loss of treatment plant effluent to groundwater or irrigation, and the lowest runoff period on record (Reference 9), the average chromium concentration influent to the reservoir would be less than 0.04 mg/l. For comparison purposes, the United States Environmental Protection Agency (USEPA) Interim Primary Drinking Water Standard for chromium (total) is 0.05 mg/l. Arab Standard Specifications (ASS) for Drinking Water establish 0.05 mg/l as the maximum permissible level for hexavalent chromium only and the World Health Organization (WHO) specifies no drinking water standard for heavalent or total chromium.

While by itself, the chromium discharge from the tannery through the joint treatment plant does not appear to represent a future problem in the King Talal reservoir, it could be a problem if other chromium discharges are present.

Overall, it is apparent that the chromium in the tannery wastewater should be pretreated. The chromium level after pretreatment should be reduced to less than 2.0 mg/l. This would represent about 0.09 mg/l in the joint treatment plant influent.

Chromium sulfate (as trivalent chromium) is employed at the tannery for the tanning of leather "uppers". This is typically in crystalline form as $Cr_2(SO_4)_3.18\ H_2O$. Thus, the chromium present in the wastewater is predominantly in the trivalent state.

Trivalent chromium can be removed as insoluble chromic hydroxide by precipitation with lime. The precipitation process is most effective at pH 8.5 - 9.5 due to the low solubility of chromic hydroxide in that range (Reference 7). Alternatively, chromic sulfide can be precipitated with

the addition of sodium sulfide or sodium bisulfite. Lime treatment is preferred for the bulk of the treatment.

As discussed in Chapter 2, there are five major outfalls from the tannery, which are presently configurated so that minimal settling of suspended solids occurs. During the sampling program, wastewater from these outfalls were observed to vary from pH 3.1 for tannage wastewater to pH 9.6 - 11.6 for the beamhouse wastewater (liming, soaking, fleshing). If these wastewaters were equalized and combined, a significant amount of chromium removal would be anticipated after sedimentation. Chromium would be removed as both chromic hydroxide and chromic sulfide, with removal dependent upon the pH, sulfide concentration (from dehairing), and sedimentation efficiency. Since none of these factors are controlled in the existing pond system, and there are no provisions to prevent the loss of contaminated seepage, the ponds should be abandoned in favor of a pretreatment system.

The proposed pretreatment system for chromium removal consists of pH adjustment (Automatic with manual override) followed by mechanical clarification, the overflow from which would be discharged to the proposed Zarqa - Ruseifa sewerage system for joint treatment of residuals (i.e., BOD, sulfide, chromium, suspended solids and oil and grease).

The proposed pretreatment system will generate an inorganic chromium-laden sludge which must be disposed of in a fashion which will protect surface and ground waters. The municipal refuse dump south of Ruseifa is not considered a desirable disposal area because of its location within the Amman - Zarqa drainage basin above a useful aquifer. The economics of on-site storage and dewatering are also presented in Section 4.2.3.

4.2.1e Oil and Grease Removal

Oil and grease removal from the tannery wastewater is recommended to reduce deposition in the sewer system and reduce the oil and grease load and associated operation and maintenance problems at the treatment plant. The estimated average daily oil and grease concentration in the tannery wastewater is approximately 170 mg/l. The source of most of the oil and grease is the fat liquoring process where oils are added to replace the natural oils lost in the beamhouse and tanhouse processes.

Oil and grease can be easily and economically removed by oil skimmers in the sedimentation unit previously discussed as part of the chromium pretreatment system. The oil and grease may be saleable.

77

Generally, sewer use codes prohibit the discharge of wastewater with more than 100 mg/l oil and grease, particularly for mineral oils. If virtually all floatable oil and grease is removed, then the oil and grease remaining should be less than 100 mg/l. Establishment of pretreatment values with oil and grease is difficult; any value used in a sewer use ordinance should allow for modification.

4.2.1f Mercury Removal

The Jordan Distilled Chemical Company has been determined to require specialized pretreatment for removal of mercury. Based upon projected mercury loads and combined industrial-municipal wastewater flows established in Chapter 3, the average joint treatment plant influent mercury concentration is estimated to be approximately 0.046 mg/l in the year 1984. This concentration of mercury is not considered to be deleterious to the biological treatment processes. The impacts of mercury in the treatment plant effluent upon irrigation and the water quality in the King Talal reservoir are discussed below.

Assuming: irrigation water demand to be 1800 m^3/donnum/year for the 200-day irrigation season (Reference 9); no mercury removal in the proposed Zarqa - Ruseifa wastewater treatment plant; and no dilution of the treatment plant effluent in the river, the mercury application rate would be approximately 0.44 kg/ha/yr. At this application rate, the maximum recommended mercury addition to soil of 0.9 kg/ha (Reference 10) would be attained in about 2 years. The USEPA does not establish a maximum recommended mercury addition to soil (Reference 11) apparently because mercury is not as readily taken up by crops as other metals and because of the potential for mercury volatilization. However, due to the facts that mercury is of known toxicity to animals and humans and is not required by plants, the above presented maximum recommended mercury addition to soil is considered justifiable although conservative. Consequently, the estimated mercury content of the proposed Zarqa - Ruseifa wastewater treatment plant effluent is not considered acceptable without pretreatment.

Assuming the worst case with no loss of treatment plant effluent to groundwater or irrigation, and the lowest runoff period on record (Reference 9), the average mercury concentration influent to the reservoir would be on the order of 0.006 mg/l. Drinking water standards for mercury are established by the WHO, the USEPA and ASS at 0.001 mg/l, 0.002 mg/l, and 0.01 mg/l, respectively. The estimated mercury concentration in the

reservoir of 0.006 mg/l is not considered critical in relationship to these standards since the illustration is for the worst case, but is highly undesirable and should be avoided.

There remains two alternative approaches for the chlor-alkali plant: individual pretreatment for mercury with discharge to the proposed Zarqa-Ruseifa sewerage system; or individual treatment and impoundment with evaporation of all waste streams. Individual treatment and discharge is not considered feasible because of the high salt content and the lack of dilution water to render effluent mercury concentrations acceptable for direct discharge. Treatment and impoundment is the preferred approach if economically feasible because the biological processes at the Zarqa-Ruseifa treatment plant will not affect any significant addition removal of the inorganic constituents of this wastewater.

In the case of either pretreatment or separate treatment, the recommended process for mercury removal is the same: sulfide precipitation.

Sulfide precipitation is the most common treatment method employed for mercury removal and consists of pH adjustment (Automatic with manual override) in the range of 8.0 - 8.5, addition of a sulfide salt (commonly sodium sulfide or sodium bisulfite), and finally sedimentation and/or filtration for removal of the insoluble mercuric sulfide precipitate. The mercury can be recovered from the solids by treatment with sodium hypochlorite or distillation. A sulfide control system using sodium hypochlorite or another oxidizing agent will also be required to maintain residual sulfide concentrations in the effluent at acceptable levels.

4.2.2 Process Unit Sizing and Outline Specifications

4.2.2a Equalization

Equalization basin sizing is directly affected by the following factors:

- operating mode of the industry (i.e. batch or continuous discharge, number of shifts per work-day, and number of days per work-week).
- intended function of equalization (i.e. dampen hydraulic, concentration, or pH variations).
- equalization operating mode (eg. continuous discharge, timed off-hour discharge, level control, pumped or gravity discharge).

19

In the context of the Planning Area, four basic operating modes were examined:

- o continuous work-day discharge
- o continuous discharge, 7 days/week
- o off-hour work-day discharge
- o off-hour discharge, 7 days/week

Ideally, continuous equalization results in a uniform flow from the equalization basin thereby reducing hydraulic and concentration variations. Off-hour equalization stores the daily wastewater effluent for discharge to the sewerage system during low flow periods which typically occur overnight.

Since the vast majority of industries in the Planning Area operate 6 days per week, industrial flows drop to near zero on Fridays when the industries are shut-down. This could be remedied by accumulating or storing a portion of the daily wastewater flow for release on Friday. This 7 day per week equalization operating mode would reduce the average daily wastewater flow by about 14 percent but requires substantially larger basins (i.e. approximately 70 to 240 percent larger for industries operating 1 and 2 shift/day, respectively).

Equalization with off-hour discharge has the effect of removing industrial flows from the sewerage system during peak domestic flow periods thus reducing overall peaking factors in the sewerage system. However, this operating mode requires equalization basins as much as 185 percent larger than those operated with continuous discharge.

Consequently, continous workday discharge was considered to be the preferred operation mode for equalization as it requires the smallest basin size. Equalization tank sizing is summarized in Table I-4.3. For purposes of cost estimation, a minimum freeboard of 0.5 meters and a depth of 3 to 4 meters has been assumed.

The 3 to 4 meter depth has been assumed to minimize area requirements, which in most cases is critical. At these depths it has been assumed that pumping will be required by all industries with equalization since many of the trunk sewers will be placed with one meter of cover. Under final design, gravity operation should be employed, where feasible, to minimize capital and operating costs.

80

TABLE I-4.3 EQUALIZATION TANK SIZING-INDIVIDUAL PRETREATMENT

INDUSTRY	DESIGN FLOW (M^3/DAY)	EQUALIZATION VOLUME (M^3)
Hussein Industrial City	190	190
Oriental Mineral Water Factories	200	140
Jordan Overall, Ltd.	17	17
Jordan Dairy	150	105
Jordan Worsted Mills	120	84
Jordan Tanning Co.	700	700
Jordan Paper and Cardboard Co.	1390	490
Jordan Army Blanket	300	210
Eagle Distilleries	210	210
Arab Breweries, Ltd.	160	110
Jordan Breweries Co., Ltd.	340	240

4.2.2b Neutralization

Neutralization (pH control) will be required at the tannery to optimize chromic hydroxide precipitation. This could be accomplished in the equalization tank with pH control instrumentation, a lime slurry storage tank, and lime slurry feed pump. pH control instrumentation should consists of self-cleaning pH probes, pH meter, recorder, and controller with high and low setting and alarm. pH should be controlled in the range 8.5 - 9.5. The lime slurry storage tank should be mechanically mixed and provide a minimum of two days storage capacity. Lime slurry feed pumps should be of the positive - displacement, adjustable - stroke type with one in service and one back-up.

pH control will also be required in conjunction with sulfide treatment for mercury removal at the chlor-alkali plant since sulfides can be odorous and dangerous. A concentrated hydrochloric acid is probably the most suitable neutralization reagent due to the highly-buffered alkaline character of this wastewater. Hydrochloric acid is also readily available and inexpensive because it is made right on-site. pH should be controlled in the range of about 8.0 - 8.5. Bench-scale laboratory treatability studies may determine neutralization to be unnecessary but for the purpose of this study a continuous 2-stage neutralization system has been included in the economic evaluation. Control instrumentation should consist of two self-cleaning pH probes and controller-sets with pH meter, recorder, and alarm. Neutralization tanks should be mechanically mixed and provide 15 minutes detention time at design flow. Acid feed pumps should be of 316 stainless steel construction, positive - displacement, adjustible-stroke type with one in service and one back-up. The acid storage tank should be sized to provide a minimum of 7 days storage capacity.

4.2.2c Sulfide Control

Sulfide control is an integral part of the recommended sulfide pretreatment system for mercury removal at the chlor-alkali plant. The sulfide control system functions to monitor and maintain sulfide concentrations in the effluent from sulfide treatment within acceptable limits. This is accomplished by addition of an oxidizing agent, typically chlorine or sodium hypochlorite, to oxidize residual sulfides to sulfate. Monitoring and chlorine feed is controlled by a chlorine residual analyzer coupled to a gas chlorinator or hypochlorite feed pump. The design flow rate of

gV

56 m^3/day is based upon 75 percent of the total average projected wastewater flow in the year 2000. The 75 percent represents that proportion of the present total wastewater flow from the mercury cell. pH adjustment will not be required since the effluent from the sulfide precipitation process will be in an acceptable range of 8.0 - 8.5. Consequently, the sulfide control system need consist of a flash mix basin and a contact chamber with a 30 minute detention time at design flow. Chlorine feed equipment is sized to meet 2-3 times the stoichiometric sulfide requirement to allow for the chlorine demand of organics plus a residual. Chlorine dose will be controlled with a residual meter. The entire process is assumed to operate 24 hours per day, 7 days per week as does the chlor-alkali facility.

4.2.2d Sedimentation

The purpose of sedimentation for the tannery is to remove the particulate chromic hydroxide formed during equalization/neutralization. A Lamella TM plate settler with integral chemical feed, flocculation, and sludge thickener was considered as a specialized sedimentation unit particularly well-suited to metal hydroxide removal. The unit is sized based on an overflow rate of about 25 m^3/m^2/day (600 gpd/ft^2) at a design flow rate of 600 m^3/day.

Sedimentation, flocculation, and chemical feed are integral parts of the recommended sulfide precipitation process for mercury removal at the chlor-alkali plant. Capabilities for chemical feed and flocculation are readily available on many small package sedimentation units and for this reason are considered as a single process unit. Particulate metallic sulfides formed during the sulfide precipitation process are characteristically more readily settleable than metallic hydroxides but a conservative design overflow rate of about 25 m^3/m^2/day (600 gpd/ft^2) will be used for sizing and costing purposes. At the design flow rate of 56 m^3/day, a 2.25 m diameter circular clarifier will be required.

The physical characteristics of the wastewater and the purpose of sedimentation is considerably different at the paper mill. There the suspended solids are more readily settleable; suspended solids loadings are higher; effluent concentrations are not critical; and flocculation is not required. Consequently, a standard rate circular clarifier with an overflow rate of approximately 40 m^3/m^2/day (1000 gpd/ft^2) at a design flow rate of 1310 m^3/day has been specified for cost analysis. This

3

requires a circular clarifier 6.5m (21 ft) in diameter. Sedimentation is considered as an alternative to screening at the paper mill.

4.2.2e Sludge Handling and Disposal

The following industries would generate sludge from recommended pretreatment facilities:

- o Jordan Tanning Co. Ltd.
- o Jordan Distilled Chemical Co.
- o Jordan Paper and Cardboard Co.

Sludge handling and disposal alternatives will be discussed individually below.

4.2.2e (i) Jordan Tanning Co., Ltd.

Special provisions for sludge handling and disposal are considered mandatory because of the nature of the chromium-laden hydroxide sludge from pretreatment. Sludge production is estimated to be on the order of 5 percent of the wastewater flow with an estimated solids, content of 2-3 percent by weight (Reference 4). Sludge thickening is anticipated to increase the solids content of the sludge to 3-6 percent (Reference 12). Therefore in 1984, at a flow of 700 m^3/day (equalized):

est. sludge production = 35 m^3/day (6 days/week) @ 3% solids

est. thickened sludge production = 21 m^3/day (6 days/week) @ 5% solids

Mechanical dewatering by belt filter press could further increase the sludge solids content to about 18-25 percent, thus decreasing the volume of sludge for disposal:

est. dewatered sludge production = 5.2 m^3/day (6 days/week) @ 20% solids

Lined earthen lagoons or drying beds with underdrains for drying and temporarily or permanent storage could be built on the approximate one hectare area currently occupied by the holding ponds. Assuming the sludge could be dried to approximately 40 percent solids:

est. dried sludge production = 2.6 m^3/day (6 days/week) @ 40% solids.

At a depth of 2 meters, the sludge beds could provide permanent storage for all sludge generated over a period of nearly 20 years with additional land available for future expansion. Consequently, permanent on-site disposal is technically feasible and will be considered as on option in the economic analysis. Presumably these sludge storage lagoons would be built as modular units every several years rather than all at one time.

Qualitatively, there are some disadvantages of on-site storage which are summarized below:

- local lack of "natural" liner materials (i.e. clays) make necessary the use of synthetic liners, whose long-term integrity is questionable.
- groundwater monitoring will be difficult if not impossible due to contamination from previous activities.
- location over a usable aquifer upstream groundwater-wise from active wells.

4.2.2 (ii) Jordan Distilled Chemical Co.

There are two different types of sludge generated from the chlor-alkali plant with this option:

- sludge from sulfide pretreatment of mercury cell wastewater.
- brine purification muds from the manufacturing process.

Sulfide pretreatment sludge would be further processed for mercury recovery and reuse.

Brine purification muds should be kept segregated from mercury cell wastewater. The high solids of this low-volume waste make mercury recovery from sulfide precipitation economically unfeasible. The high salt and suspended solids concentrations are also considered undesirable in the sewerage system. Separate handling and disposal is recommended. Alternative handling and disposal methods considered are outlined below:

- mechanical dewatering and hauling to approved disposal site
- drying in evaporation ponds with hauling to approved disposed site
- impoundment and permanent on-site storage

Both temporary storage in evaporation ponds and permanent impoundments would require liners to prevent groundwater contamination.

The permanent on-site storage impoundment should be sized for a 20-year design life. Assuming a useful depth of 2 meters with 0.5 meters freeboard, the required land area is approximately 2.4 hectares, of which approximately 1.6 hectares would be usable impoundment. Presumably, one or two smaller impoundments would be constructed initially with additional units constructed as active impoundments near capacity.

The brine purification mud evaporation ponds should be sized to provide approximately 3 months storage capacity at a usable depth of 0.5 meters. This should effect rapid drying and providing temporary storage during the rainy season. Dried mud would then be hauled to an approved permanent disposal site. Land area required for this option is approximately 0.33 hectares.

85

4.2.2e (iii) Jordan Paper and Cardboard Co.

Both screening (save-all) and sedimentation pretreatment options being considered for the paper mill wastewater generate "sludge". This "sludge" is predominantly waste paper pulp fibers which can be recovered and reused. Hence, sludge handling and disposal facilities will not be required as part of the pretreatment process. The economic value of this "sludge" is at least equal to that of sorted scrap paper which is purchased for 23.2 JD/tonne.

4.2.3 Capital Cost Estimate

Capital cost estimates for all individual pretreatment processes investigated are presented in Table I-4.4. Construction costs include all materials, labor, equipment, and equipment shipping costs. Material and labor estimates are based on 1980 local costs. Equipment estimates are based on 1980 U.S. costs with provision for transportation. Conversion from U.S. dollar prices to Jordanian Dinars (JD.) is based on an exchange rate of $3.25/J.D. . Land costs have been purposely excluded from the economic analysis because of extremely variable market values. Furthermore, many of the proposed pretreatment systems would occupy land already used for wastewater disposal (i.e. cesspools, holding ponds, etc.).

4.2.4 Operating Cost Estimate

Operating cost estimates of all individual pretreatment processes investigated are presented in Table I-4.5. All estimates reflect first year operating expenses in 1980 currency (JD).

4.3 LOCALIZED PRETREATMENT

4.3.1 Description

Localized industrial pretreatment facilities serving two or more industries has been evaluated for each of the major industrial zones in the Planning Area. Localized pretreatment strategies were developed by grouping all industries located in close geographic proximity and requiring pretreatment. Next, the compatability of wastewater characteristics and recommended individual pretreatment processes was evaluated. The final criterion was land availability. Field investigations and aerial photographs were used for this determination. An economic evaluation was performed for localized pretreatment options which conformed to the criteria outlined above.

TABLE I-4.4 CAPITAL COST ESTIMATES - INDIVIDUAL PRETREATMENT

INDUSTRY	PRETREATMENT PROCESS OPTIONS	CONSTRUCTION COST (JD)	ENGINEERING & CONTINGENCIES* (JD)	TOTAL ESTIMATED CAPITAL COST (JD)
Hussein Industrial City	Equalization	7,190	2,520	9,710
Oriental Mineral Water Factories	Equalization	7,000	2,450	9,450
Jordan Dairy Co.	Equalization	5,280	1,850	7,130
Jordan Overall Ltd.	Equalization	2,390	840	3,230
Jordan Worsted Mills	Equalization	3,920	1,370	5,290
	Screening	2,460	860	3,320
Jordan Tanning Co.	Equalization (w/o aeration)	19,200	6,720	25,920
	Equalization (w/aeration)	22,600	7,910	30,510
	Screening	2,460	860	3,320
	pH Control (hydroxide pptn.)	5,970	2,090	8,060
	Sedimentation (w/flocculation, chem. addition, sludge thickening)	20,000	7,000	27,000
	Sludge Dewatering (belt filter press)	34,500	12,100	46,600
	Sludge Drying Beds	25,000	8,750	33,750
	Permanent On-Site Sludge Storage	157,000	54,900	211,900
Jordan Paper and Cardboard Co.	Equalization	15,500	5,420	20,920
	Screening (Save-all)	86,800	30,400	117,200
	Sedimentation (mech. clarifier)	18,000	6,300	24,300
Jordan Chemical Co.	pH Control (sulfide pptn.)	8,100	2,840	10,940
	Sedimentation (w/chem. addition and flocculation)	13,400	4,690	18,090
	Sulfide Control	3,800	1,330	5,130
	Permanent On-Site Brine Mud Impoundment	93,400	32,700	126,100
	Brine Mud Evaporation Pond	15,300	5,360	20,660
	Brine Mud Dewatering (belt filter press)	34,500	12,080	46,580
Jordan Army Blanket Fact.	Equalization	6,900	2,420	9,320
	Screening	2,850	1,000	3,850
Arab Breweries Co., Ltd.	Equalization	7,000	2,450	9,450
Jordan Breweries Co., Ltd.	Equalization	9,920	3,470	13,390
Eagle Distilleries	Equalization	12,600	4,410	17,010
	Neutralization	20,900	7,320	28,220

* Estimated at 35% construction cost.

TABLE I-4.5 ANNUAL OPERATING COST ESTIMATES - INDIVIDUAL PRETREATMENT

INDUSTRY	PRETREATMENT PROCESS OPTIONS	LABOUR COST (JD/YR)	POWER COST (JD/YR)	SLUDGE HAULING COST (JD/YR)	CHEMICAL COST (JD/YR)	MECHANICAL REPAIR & REPLACEMENT (JD/YR)	TOTAL ESTIMATED ANNUAL OPERATING COST (JD/YR)
Hussein Industrial City	Equalization	100	1,000	0	0	190	1,290
Oriental Mineral Water Fact.	Equalization	100	1,100	0	0	190	1,390
Jordan Dairy Co.	Equalization	100	1,000	0	0	130	1,230
Jordan Overall, Ltd.	Equalization	100	110	0	0	90	300
Jordan Worsted Mills	Equalization	100	620	0		120	840
	Screening	200	0	200	0		400
Jordan Tanning Co.	Equalization (w/o aeration)	200	4,200	0	0	310	4,710
	(w/aeration)	200	4,200	0	0	550	4,950
	pH Control	100	20	0	3,000	400	3,520
	Screening	200	0	0	0	0	200
	Sedimentation (w/floc., chem., add., sludge thickening)	100	100	6,600	50	50	6,900
	Mechanical Sludge De-watering (belt filter press) w/Off-Site Disposal	1,000	500	1,600	1,000	1,380	5,480
	Sludge Drying Beds w/Off-Site Disposal	1,000	0	910	0	0	1,910
	Permanent On-Site Sludge Storage	400	0	0	0	0	400
Jordan Paper and Cardboard Co.	Equalization	200	2,800	0	0	420	3,420
	Screening	100	630	0	0	50	780
	Sedimentation (mech. clarifiers)	100	100	0	0	50	250
Jordan Chemical Co.	pH Control (sulfide pptn.)	100	760	0	1,200	440	2,500
	Sedimentation (w/ chemical addition and flocculation)	100	160	0	40	50	350
	Sulfide Control	100	100	0	230	200	630
	Permanent On-Site Brine Mud Impoundment	400	0	0	0	0	400
	Brine Mud Evaporation Pond w/Off-Site Disposal	700	0	310	0	0	1,110
	Brine Mud Dewatering (Belt Filter Press) w/Off-Site Disposal	200	70	620	420	1,400	2,710
Jordan Army Blanket Factory	Equalization	100	1,300	0	0	190	1,590
	Screening	200	0	310	0	0	510
Arab Breweries Co.	Equalization	100	630	0	0	190	920
Jordan Breweries Co.	Equalization	150	1,300	0	0	310	1,760
Eagle Distilleries	Equalization (w/aeration)	100	2,000	0	0	440	2,540
	Neutralization	100	950	0	1,500	400	2,950

4.3.1a Ruseifa

Located near the western municipal boundary of Ruseifa there exists an industrialized area composed of the following industries:

- Oriental Mineral Water Factories
- Transjordan Minerals Research Co.
- Jordan Overall Co., Ltd.
- Jordan Dairy Co., Ltd.
- Jordan Worsted Mills
- Sultan Plastics Co.

This is designated as Industrial Area "A". Industrial development currently occupies approximately 50 percent of the 10 hectare land area bordered by the Zarqa - Ruseifa Road on the north and the Zarqa River on the south. The remaining 50 percent is interspersed agricultural land.

Process wastewater from Transjordan Minerals Research Co. is not recommended for discharge to the proposed Zarqa - Ruseifa sewerage system because of the high suspended solids content of the wastewater and the inorganic nature of the solids. This facility should continue its current practice of recycling and reuse of process wastewater with no discharge of effluent.

Process wastewater discharge from Sultan Plastics Co. is less than 0.1 m^3/day and consists of only brine solution from elution of the ion-exchange water treatment system. Consequently, this industry should be segregated from localized pretreatment facilities with process and sanitary wastewaters discharged to the sewerage system without pretreatment.

Process wastewater from the other industries located in Ruseifa-"A" could be equalized in a common basin. Jordan Worsted Mills would still require screening prior to equalization in the localized facility.

4.3.1b Awjan Al Janubi

Only three industries are located in Awjan al Janubi, namely:

- Noralux Industrial Commercial Co.
- Kholaghassi Foam & mattress Factory
- Cream Tex

Localized pretreatment is not considered feasible as these industries are physically separated by considerable distances and discharge only minor amounts of wastewater.

4.3.1c Awjan Al Gharbi

Located approximately 0.5 km south of the Zarqa Bridge along the Zarqa-Ruseifa Road is an industrial area consisting of the following industries:

- o Arab Breweries Co., Ltd.
- o Jordan Breweries Co., Ltd.
- o Eagle Distilleries
- o Zeidan Refrigeration Co.

This is designated as Industrial Area "B". Very little land is available in this area for equalization but a small agricultural plot of about 875 m^2 is located between the Arab and Jordan Breweries. This area is sufficient for a combined equalization facility. Aeration would be required due to the high organic content of the combined wastewater. Piping and easements would be minimal due to the close proximity of these industries.

4.3.1d Awjan esh Sharqi

Pretreatment facilities have been recommended for the following industries located in Awjan esh Sharqi:

- o Jordan Tanning Co.
- o Jordan Paper and Cardboard Co., Ltd.
- o Jordan Army Blanket Factory

The tannery requires specialized pretreatment and is not considered compatible for combined pretreatment with the paper mill and army blanket factory wastewaters. Since the paper mill and army blanket factory are separated by a distance of nearly 1.3 kilometers,a combined pretreatment facility was not investigated further. A localized pretreatment facility serving this area may be feasible in the future due to substantial new industrial development anticipated there.

4.3.2 Process Unit Sizing

Equalization tank sizes for localized pretreatment alternatives are presented in Table I-4.6. The tanks were designed to provide continuous uniform flow throughout the workweek. Design flow is based on 1990 average workdays flows.

For the Industrial Area "B" localized equalization tank, no storage capacity has been provided for the Eagle Distillery since this is a continuous waste stream and requires equalization only for the purpose of neutralization. Storage provided for the alkaline bottle-wash wastewaters

90

TABLE I-4.6 EQUALIZATION TANK SIZING - LOCALIZED PRETREATMENT

INDUSTRIAL AREA	DESIGN FLOW (M^3/DAY)	EQUALIZATION VOLUME (M^3)
Ruseifa - "A"		
Oriental Mineral Water Factory	200	140
Jordan Overall, Ltd.	17	17
Jordan Dairy	150	105
Jordan Worsted Mills	120	84
Total	487	346
Awjan al Gharbi - "B"		
Eagle Distilleries	210	0
Arab Breweries Co., Ltd.	160	110
Jordan Breweries Co., Ltd.	340	240
Zeidan Refrigeration	9	9
Total	719	359

from the breweries should be sufficient to maintain the equalization effluent pH above 5.5 during the workweek. Equalization effluent pH may drop to an unacceptable value on Friday when the only industrial flows are from the Eagle Distillery alcohol plant (i.e. distillation shops), and compressor cooling water and boiler blowdown from the breweries. If this localized pretreatment option were implemented and pH values outside of acceptable limits were experienced, the Eagle Distillery would be required to install simple pH controls.

4.3.3 Capital Cost Estimate

Capital cost estimates of localized equalization facilities for Industrial Areas "A" and "B" are presented in Table I-4.7. Land costs for the localized pretreatment facility and permanent easements for pipeline right-of-way have been estimated at an assumed value of 10 JD/m^2.

4.3.4 Operating Cost Estimate

Operating cost estimates of localized equalization facilities for Industrial Areas "A" and "B" are presented in Table I-4.7. All estimates reflect first year operating expenses based on 1984 flows.

4.4 INDIVIDUAL TREATMENT/DISPOSAL

4.4.1 Description

Individual wastewater treatment and disposal was considered a potentially viable alternative for the following industries:

- Yeast Industries Co.
- Jordan Phosphate Co.
- Jordan Iron and Steel Co.
- Jordan Chemical Industries

A summary of treatment parameters and treatment processes investigated is presented in Table I-4.8. Each is discussed in detail below.

4.4.1a Yeast Industries Co.

Yeast Industries Co., Ltd. is located on the north bank of the Zarqa River in an agricultural area near the western perimeter of the Ruseifa Municipality. Due to its isolated location, the distance from the yeast plant to the first-stage trunk sewer for the proposed Zarqa-Ruseifa sewerage system is approximately 2.7 kilometers. Consequently, individual treatment with direct discharge of effluent was investigated.

Alternative processes evaluated for individual treatment of yeast plant wastewater are as follows:

92

TABLE I-4.7 CAPITAL & ANNUAL OPERATING COST ESTIMATES - LOCALIZED PRETREATMENT

CAPITAL COST

INDUSTRIAL AREA	PRETREATMENT PROCESS OPTIONS	CONSTRUCTION COSTS (JD)	ENGINEERING* & CONTINGENCIES (JD)	EASEMENTS** (JD)	TOTAL CAPITAL (JD)
Ruseifa "A"	Equalization	9,920	3,470	41,400	54,790
Awjan al Gharbi "B"	Equalization	15,800	5,530	8,800	30,130

ANNUAL OPERATING COST

INDUSTRIAL AREA	PRETREATMENT PROCESS OPTIONS	LABOR COST (JD/YR)	POWER COST (JD/YR)	HAULING COST (JD/YR)	CHEMICAL COST (JD/YR)	MECHANICAL REPAIR & REPLACEMENT (JD/YR)	TOTAL ESTIMATED ANNUAL OPERATING COST (JD/YR)
Ruseifa "A"	Equalization	1000	1260	0	0	310	2570
Awjan al Gharbi "B"	Equalization	1000	2050	0	0	440	3490

* Estimated at 35% construction cost

** Permanent easement for pipe right-of-way and land area for pretreatment facility

TABLE I-4.8 SUMMARY OF INDUSTRIES WITH POTENTIAL FOR INDEPENDENT TREATMENT AND TREATMENT PROCESS INVESTIGATED

INDUSTRY	TREATMENT PARAMETERS	TREATMENT PROCESSES INVESTIGATED
Yeast Industries Co.,Ltd.	BOD/COD/Suspended Solids	Anaerobic Digestion/ Land Application (Irrigation), Storage/Hauling, Activated Sludge
Jordan Iron & Steel Co.	Suspended Solids	Sedimentation
	Oil and Grease	Oil and Grease Skimmer
Jordan Ceramic Ind. Co.	Suspended Solids	Sedimentation
Jordan Chemical Ind.	Mercury/Suspended Solids/Dissolved Solids	Sulfide Precipitation w/Mercury Recovery, Impoundment/Evaporation
Jordan Phosphate Co.,Ltd.	Suspended Solids	Sedimentation
Jordan Tiles Co.	Suspended Solids	Sedimentation

- anaerobic decomposition (contact process)
- land application of wastewater with and without anaerobic pretreatment
- storage with hauling to the proposed Zarqa - Ruseifa wastewater treatment plant

The anaerobic decomposition process was selected as the basic biological treatment process because of the similarities to the fermentation processes employed in the manufacture of yeast. The nutrient content of the fermentation waste are sufficient for anaerobic treatment processes but not aerobic treatment processes which require considerably more nutrients for cell synthesis. Sludge yield is considerably less than the activated sludge process and methane gas production is estimated to provide all heating requirements for the treatment process due to the high BOD concentration of the wastewater.

The anaerobic contact process is basically a conventional anaerobic digester with provision for solids separation and recirculation of seed organisms. A degasifier is usually needed to minimize floating solids in the separation step and a gas holder and aerated sludge storage tank will also be required. The anaerobic contact process is expected to remove 70-80 percent COD and 80-90 percent BOD. Based on an average influent COD of 4150 mg/l and BOD of 2690 mg/l, the average effluent quality achievable is estimated as follows:

BOD = 270 - 540 mg/l (30.2-60.5 kg/day)

COD = 830 -1245 mg/l (93-140 kg/day)

TSS = 30-50 mg/l (3.4 - 5.6 kg/day)

These estimated effluent BOD and COD concentrations from anaerobic treatment are still not considered acceptable for discharge to the Zarqa River, except possibly during the rainy season when river levels are high and dilution significant.

Land application of wastewater was evaluated as a treatment/disposal method for both raw and anaerobically-treated yeast plant wastewater. Within 0.5 km of the yeast plant along the bank of the Zarqa River there exists about 10 hectares of prime agricultural land for irrigation. Much of this land is already irrigated with combined Zarqa River water and yeast plant wastewater. If this land is to be employed for irrigation of raw yeast plant wastes, monitoring will be necessary to prevent raw waste from entering the river. Monitoring will be less critical if the wastewater is pretreated by anaerobic decomposition.

A larger parcel of land is located due north of the yeast plant. This hilly area of approximately 1 km^2 is presently not utilized for agricultural purposes primarily because of the slope which varies from about 3 to 30 percent, the lack of water, and shallow, rocky soil conditions. These soils are generally classified as yellow Mediterranean rigosols and are probably best utilized for agricultural purposes as pasture land (Reference 13). Irrigation is likely to significantly improve the productivity of this land area. The potential for pollution of the Zarqa River and monitoring requirements would be markedly reduced because of its distance from the Zarqa River.

A slow-rate land treatment system using ridge-and-furrow or border strip flooding application methods has been selected for this evaluation. This land application method is well-suited to soils of moderately slow to moderately rapid permeability with slopes of up to 20 percent on cultivated land and up to 40 percent for non-cultivated land. Piping costs are minimal and the application method offers simplicity and flexibility. The system consists of no more than a storage tank, pumps, and piping. Expected quality of treated water from slow-rate land treatment is as follows (Reference 11):

BOD	<2 - <5 mg/l
TSS	<1 - <5 mg/l
Ammonia-Nitrogen as N	<0.5 - <2
Total Nitrogen as N	3 - 8
Total Phosphorus as P	<0.1 - <0.3

Wastewater with hauling to the proposed Zarqa-Ruseifa wastewater treatment plant was initially considered as an alternative to individual treatment of yeast plant wastewater. Simple calculations revealed that this plan would require approximately 163 tanker trucks per week at 4 m^3 each. With the current fleet of septage hauling vehicles (i.e. 6 from Zarqa Municipality and 20 private) this is neither reasonable nor economical and was not given further consideration.

4.4.1b <u>Jordan Phosphate Co., Ltd.</u>

There are two major industrial wastewater discharges from phosphate mining and beneficiation activities in the Planning Area:

- o scrubber wastewater from dryers
- o tailing slime thickener underflow from the beneficiation plant.

96

Dryer Nos. 3 and 4 discharge approximately 360 m^3/day of scrubber wastewater to three concrete settling basins which over-flow to the Zarqa River. This waste stream contributes a heavy load of inorganic suspended solids to the river as the basins have been observed to be filled to the point of over-flowing with solids. This is expected to be a common occurrence due to the small volume of the basins and the manual cleaning methods employed.

The tailing slimes from the beneficiation plant constitute a greater wastewater flow (1440 m^3/day) and inorganic solids load, although this is not discharged to the Zarqa River.

Due to the large flows, heavy solids loads, and inorganic nature of the solids, the phosphate milling wastewaters are considered deleterious to the proposed Zarqa-Ruseifa sewerage system and should be a treated individually. Furthermore, these wastewaters are low in BOD and contain no hazardous wastes. The existing treatment methods are considered adequate for the tailing slimes but inadequate for the dryer scrubber wastewater.

The Jordan Phosphate Company is currently building a new beneficiation plant south of the Amman - Zarqa Highway adjacent to its active mining areas. When the new beneficiation plant is completed sometime in 1983, the existing facilities will be permanently closed-down. As such, large capital expenditures for improving the existing scrubber wastewater settling basins is not considered justifiable. During the interim, the Jordan Phosphate Company should be encouraged to maintain the drier scrubber wastewater settling basins in reasonable operating condition.

4.4.1c Jordan Iron and Steel Co.

The Jordan Iron and Steel Co. operates a rolling mill and scrap iron melt plant in Awjan esh Sharqi.

Wastewater from the melt plant consists of contact cooling water from continuous casting and non-contact furnace cooling water. These wastestreams are combined and treated in a closed-loop recirculation system consisting of a cooling tower and sedimentation tank for scale removal. Make-up water is softened via ion-exchange, chlorinated for slime control, then polyphosphate is added for corrosion control. The only wastewater discharged is a minor amount of cooling tower blowdown and ion-exchange brine solution eluate.

91

Wastewater from the rolling mill consists of contact cooling water. This wastewater contains: scale and metal chips flexed from the steel surface during rolling; debris from the floor; and lubricating oil from roller bearings. The oil is usually non-emulsified and readily separates from the water upon standing (Reference 14). Results of analysis of a single grab sample collected as part of this study are presented in Appendix Table I-A.2.2. The suspended solids and oil and grease concentrations of 109 mg/l and 40 mg/l, respectively, are considered sufficiently high to require treatment. Furthermore, the suspended solids concentration is considered unrepresentatively low as much of the coarse suspended solids could have settled out in the earthen ditch upstream of where the sample was collected. Suspended solids concentrations of 100-250 mg/l are characteristic of scale pit effluents. Treatment could be performed at the proposed Zarqa - Ruseifa wastewater treatment plant but this is considered unnecessarily expensive due to the high flow (i.e. 1252 m^3/day) and low organic content as reflected by the COD concentration of 216 mg/l in Table I-A.2.2. Individual treatment with direct discharge was examined as an alternative.

Individual treatment need consist of only simple sedimentation with oil removal. Treatment could be accomplished by a concrete scale pit with mechanical scale drag-out, similar to that of the melt plant, or by an earthen settling basin with floating oil skimmer. The effluent produced is anticipated to have the following characteristics:

TSS	less than 100 mg/l
Oil and Grease	less than 10 mg/l

In order to produce an effluent suitable for discharge to the waterway, additional treatment by coagulation and clarification is likely to be required. The anticipated scale pit or earthen basin effluent characteristics are considered suitable for reuse of the wastewater in the rolling mill after cooling and possibly minor chemical addition for algae control. Cooling would most likely be accomplished by a cooling tower in the case of the scale pit or by spray evaporation in the case of the earthen basin. With available land and the shortage of water, the earthen spray cooling pond with recycle appears to be a rational approach and will be the assumed treatment method used for subsequent economic analysis.

4.4.1d Jordan Distilled Chemical Company

The Jordan Distilled Chemical Company operates a mercury cell chlor-alkali manufacturing plant in Awjan esh Sharqi. Analytical results from wastewater samples collected as part of this study have indicated total mercury concentrations in the mercury cell wastewater and the brine muds to be 15.25 mg/l and 25 mg/l, respectively. These mercury concentrations are four orders of magnitude greater than drinking water standards established by the WHO, ASS, and USEPA, and are two orders of magnitude greater than the TL_{50}. The TL_{50} is defined as that concentration at which fifty percent of the test organising survive after 96 hours. Consequently, treatment of this wastewater is paramount.

As discussed in Section 4.2.1f, the recommended treatment process for process wastewaters from the chlor-alkali facility is sulfide precipitation of mercury cell wastewater with mercury recovery. Brine purification muds are presently settled with recycle of supernatant to the process. The brine mud settling tank underflow could be pumped to impoundments with treated mercury cell wastewater for evaporation and permanent storage. Due to the highly toxic nature of this waste, the impoundment would require an impermeable lining to prevent the migration of contaminated leachate to groundwater.

4.4.2 Process Unit Sizing and Outline Specifications

4.4.2a Yeast Industries Co.

4.4.2a (i) Anaerobic Contact

In order to obtain 90 percent BOD removal, a solids retention time of about 10 days will be required at 35°C (Reference 15). Using the average BOD and COD concentrations presented in Appendix Table I-A.2.1 as 2690 mg/l and 4150 mg/l, respectively, at a design flow rate of 197 m^3/day and an assumed mixed liquor suspended solids of 5000 mg/l, the required digester volume is approximately 98 m^3. This translates to an average BOD loading of 4.6 kg/m^3/day (289 lb/1000 ft^3/day) and an average hydraulic detention time of 0.5 days. Methane gas production is estimated at approximately 233 m^3/day, which should be adequate to provide all heating requirements. Sludge storage is sized to provide a minimum of four days storage at design flow. This requires a storage volume of about 23 m^3 assuming a sludge yield of 0.15 times BOD removal and 1 percent sludge solids concentration. The sedimentation unit is sized for an overflow rate of 12 m^3/m^2/day (300 gpd/ft^2) at design flow. This requires a circular clarifier approximately 4.6 meters in diameter.

97

4.4.2a (ii) Land Application

Land requirements, with and without anaerobic pretreatment, were determined by evaluating the minimum area requirements for flow, nitrogen, phosphorus, and BOD. Minimum area requirements without anaerobic pretreatment are outlined below:

Parameter	Average Annual Raw Load	Maximum Recommended Annual Application Rate	Minimum Area Required (ha)
Flow	34,000 (m^3)	31,700 (m^3/ha)	1.1
Nitrogen	1,750 (kg)	490 (kg/ha)	3.6
Phosphorus	50 (kg)	150 (kg/ha)	<0.1
BOD	91,400 (kg)	15,600 (kg/ha)	5.9

As illustrated, BOD is the controlling parameter requiring a minimum of 5.9 hectares in 1983. Maximum recommended application rates are based on References 10 and 11. BOD application rates as high as 200 kg/ha/day have been employed with industrial wastewaters, but 50 kg/ha/day was selected for a conservative estimate. Minimum land area requirements for the future will parallel the wastewater flow projections presented in Table I-3.1, increasing to about 10.6 ha in the year 2000. Sufficient agricultural lands exist in both the adjacent Zarqa River Valley and on the slopes north of the yeast plant to satisfy the area requirement for land treatment outlined above. The effect of anaerobic treatment on area requirements for land application of wastewater would be to reduce nitrogen, phosphorus, and BOD loadings to the point where flow is the controlling factor. Thus, land area requirements would be reduced from 5.9 hectares to 1.1 hectares in 1983. The economics of this alternative have been presented in Section 4.4.3 and 4.4.4.

An aerated pumped storage tank sized for 1 day detention time at design flow has also been included in the cost estimates.

4.4.2b Jordan Iron and Steel Co.

The earthen spray cooling pond has been sized for a hydraulic detention time of 6 hours at the design flow of 1250 m^3/day. Assuming an average depth of 2 meters with 0.3 m freeboard, the pond and dike would occupy approximately 490 m^2 with about 156 m^2 of water surface area. An oil containment boom and oil skimmer capable of removing 50 kg/day of oil will also be required. The pond is probably best located on the western slope of the property immediately adjacent to the rolling mill.

180

4.4.2c Jordan Distilled Chemical Co.

This option is very similar to the pretreatment option described previously in Section 4.2.2 with permanent on-site storage of brine purification muds. The only difference is the proposed permanent on-site evaporation impoundment must be enlarged or additional impoundment constructed to accommodate the additional flow from the mercury cell wastewater. Based upon an assumed average annual net evaporation of approximately 0.85 meters and a mercury cell wastewater design flow of 56 m^3/day, the additional evaporation pond area required is about 2.4 hectares with an additional 20 percent for dike construction and buffer zone. Approximately 2 hectares would be required for initial flows in 1983. The sizing and cost estimate for sulfide precipitation treatment of mercury cell wastewater is identical.

4.4.3 Capital Cost Estimate

Capital cost estimates of all individual treatment and disposal options investigated are presented in Table I-4.9. Construction costs include all materials, labor, equipment, and equipment shipping costs. Material and labor estimates are based on local 1980 costs. Equipment estimates are based on 1980 U.S. costs with provision for transportation. Conversion from U.S. dollar prices to Jordanian Dinars (JD) is based on an exchange rate of $ 3.25/JD. Land costs have been excluded from the economic analysis.

4.4.4 Operating Cost Estimate

Annual operating cost estimates for all individual treatment and disposal options evaluated are presented in Table I-4.10. All estimates are based on 1980 costs and reflect first year operating expenses.

4.5 ANALYSIS OF ALTERNATIVES

4.5.1 Individual Pretreatment Options

A present worth analysis was performed to determine the most cost-effective individual pretreatment process option for industries where several options were considered. This analysis is presented in Table I-4.11.

The present worth analysis is based on a 20-year design period with operation beginning in 1984. Operating costs were assumed to increase proportionately with projected flows. All costs are presented in 1980 JD with an assumed interest rate of 10 percent.

101

TABLE I-4.9 CAPITAL COST ESTIMATES - INDIVIDUAL TREATMENT AND DISPOSAL

INDUSTRY	TREATMENT/DISPOSAL PROCESS OPTIONS	CONSTRUCTION COST (JD)	ENGINEERING & CONTINGENCIES* (JD)	TOTAL ESTIMATED CAPITAL COST (JD)
Yeast Industries Co.	Anaerobic Decomposition	59,800	20,900	80,700
	Land Application			
	(effl. from anaerobic treat.)	13,800	4,830	18,630
	(raw wastewater)	15,400	5,390	20,790
Jordan Iron & Steel Co.	Earthen Spray/Settling Pond	5,940	2,080	8,020
	(w/oil skimmer and pumped recycle)			
Jordan Distilled Chemical Co.	pH Control (sulfide pptn.)	8,100	2,840	10,940
	Sedimentation (w/chem.addition and flocculation)	13,400	4,690	18,090
	Sulfide Control	3,800	1,330	5,130
	Permanent On-Site Impoundment/ Evaporation (mercury cell ww only)	130,000	45,500	175,500
	Permanent On-Site Brine Mud Impoundment	93,400	32,700	126,100
	Brine Mud Evaporation Pond	15,300	5,360	20,660
	Brine Mud Dewatering (beltfilter press)	34,500	12,100	46,600

* Estimated at 35 percent construction cost.

TABLE I-4.10 ANNUAL OPERATING COST ESTIMATES - INDIVIDUAL TREATMENT AND DISPOSAL

INDUSTRY	TREATMENT/DISPOSAL PROCESS OPTIONS	LABOR COST (JD/YR)	POWER COST (JD/YR)	SLUDGE HAULING COST (JD/YR)	CHEMICAL COST (JD/YR)	MECHANICAL REPAIR AND REPLACEMENT (JD/YR)	TOTAL ESTIMATED ANNUAL OPERATION COST (JD/YR)
Yeast Industries Co.	Anaerobic Decomp.	2,000	1,600	740	250	750	5,340
	Land Application						
	(effl.from anaerobic treatment)	100	2,000	0	0	710	2,810
	(raw wastewater)	100	2,700	0	0	760	3,560
Jordan Iron & Steel Co.	Earthen Spray/ Settling Pond (w/ oil skimmer and pumped recycle)	350	2,700	0	100	480	3,630
Jordan Distilled Chem.Co.	pH Control (sulfide (pptn.)	100	760	0	1,200	440	2,500
	Sedimentation (w/ chemical addition and flocculation)	100	160	0	40	50	350
	Sulfide Control	100	100	0	230	200	630
	Permanent On-Site Impoundment/Evap. (mercury cell ww only)	400	0	0	0	0	400
	Permanent On-Site Impoundment (brine purification mud only)	400	0	0	0	0	400
	Evaporation Pond w/Off-Site Disposal (brine purification mud only)	700	0	310	0	0	1,110
	Mechanical Dewatering w/Off-Site Disposal (brine purification mud only)	200	70	620	420	1,380	2,690

TABLE I-4.11 PRESENT WORTH ANALYSIS - INDIVIDUAL PRETREATMENT PROCESS OPTIONS

INDUSTRY	PRETREATMENT PROCESS OPTION	PRESENT WORTH CAPITAL COST (1980 JD)	PRESENT WORTH OPERATING COST (1980 JD)	TOTAL PRESENT WORTH (1980 JD)
Jordan Tanning Co.	Equalization			
	(w/o aeration)	25,900	27,400	53,300
	(w/aeration)	30,500	28,800	59,300
	Chromium Pretreatment Sludge Handling/Disposal			
	(mechanical dewater w/off-site disposal)	46,600	31,900	78,500
	(sludge drying beds w/off-site disposal)	33,800	11,100	44,900
	(permanent on-site sludge storage)	211,900	2,300	214,200
Jordan Paper and Cardboard Co.	Screening (save-all)	117,200	4,500	121,700
	Sedimentation (mech. clarifier)	24,300	1,500	25,800
Jordan Distilled Chemical Co.	Brine Purification Mud Handling/ Disposal			
	(mechanical dewater w/off-site disposal)	46,600	18,500	65,100
	(evaporation pond w/off-site disposal)	20,700	7,600	28,300
	(permanent on-site impoundment)	126,100	2,700	128,800
Eagle Distilleries	Equalization	17,000	16,600	33,600
	Neutralization	28,200	19,300	47,500

Examination of Table I-4.11 indicates the present worth of aerated equalization of tannery wastewater to be approximately 11 percent greater than equalization without aeration. The capital cost of aerated equalization is approximately 18 percent higher than equalization without aeration. The additional expenditure for aeration is considered justifiable in order to minimize odor problems at the tannery and in the sewers while reducing the BOD and sulfide load to the proposed Zarqa-Ruseifa wastewater treatment plant.

Of the three chromium pretreatment sludge handling/disposal options evaluated for the tannery, Table I-4.11 indicates sludge drying beds with off-site disposal to be the most economical with the lowest capital cost and lowest total present worth. Table I-4.11 also shown permanent on-site sludge storage to be extremely expensive and should therefore be avoided if an acceptable disposal site can be located within a reasonable hauling distance.

At the paper mill, the economics of fine screening and sedimentation were evaluated as alternative methods of reducing the solids and hydraulic load to the proposed sewerage system. Table I-4.11 clearly demonstrates sedimentation to be the most economical alternative with substantially lower capital cost and total present worth.

Three alternative methods of handling and disposing of brine purification muds from the Jordan Distilled Chemical Company were evaluated. Similar to the tannery, Table I-4.11 illustrates the evaporation pond with off-site disposal to be the most economical alternative. Again, this assumes an acceptable disposal site will be located within a reasonable hauling distance.

Equalization was considered as an alternative to neutralization for pH control of wastewaters from the Eagle Distillery. As illustrated in Table I-4.11, neutralization is the more economical alternative with lower capital and operating costs.

4.5.2 Individual vs Localized Pretreatment

A present worth analysis was also performed to compared the economics of individual vs. localized pretreatment. This analysis is presented in Table I-4.12.

Examination of Table I-4.12 indicates localized equalization of Industrial Area "A" to be more costly than the sum total cost of individual equalization on the basis of total present worth and capital cost, and is, therefore, not recommended.

TABLE I-4.12 PRESENT WORTH ANALYSIS - INDIVIDUAL vs. LOCALIZED PRETREATMENT

INDUSTRY OR INDUSTRIAL AREA	PRETREATMENT PROCESS	PRESENT WORTH CAPITAL COST (1980 JD)	PRESENT WORTH OPERATING COST (1980 JD)	TOTAL PRESENT WORTH (1980 JD)
Oriental Mineral Water Factories	Equalization	9,400	8,100	17,500
Jordan Overall, Ltd.	Equalization	3,200	1,200	4,400
Jordan Dairy Co., Ltd	Equalization	7,100	9,100	16,200
Jordan Worsted Mills	Equalization	5,300	6,200	11,500
Sum Total	Individual Equalization	25,000	24,600	49,600
Industrial Area "A" (same industries as above)	Localized Equalization	54,800	16,700	71,500
Arab Breweries Co., Ltd	Equalization	9,400	5,200	14,600
Jordan Breweries Co., Ltd.	Equalization	13,400	9,700	23,100
Eagle Distilleries	Equalization	17,000	16,600	33,600
Zeidan Refrigeration	None	0	0	0
Sum Total	Individual Equalization	39,800	31,500	71,300
Industrial Area "B" (same industries as above)	Localized Equalization (w/aeration)	30,100	20,500	50,600

Conversely, Table I-4.12 indicates localized equalization of Industrial Area "B" to be more economical than the sum total cost of individual equalization. Both capital and total present worth of capital and operation costs over the 20-year design period are reduced with the following secondary advantages:

- o aeration of all contributing industrial wastewaters.
- o equalization of Zeidan Refrigeration wastewater, which was not considered justifiable individually.
- o more effective pH dampening of acidic Eagle Distillery wastewaters due to the alkaline nature of the brewery wastewaters.
- o preserves valuable individual industrial land areas for expansion

Consequently, localized pretreatment for Industrial Area "B" is considered worthwhile pursuing. It will be the responsibility of the industries involved to construct, operate, and administer the localized pretreatment facility just as it will be the responsibility of each industry to construct and operate individual pretreatment facilities. If the industries cannot enter an equitable arrangement for financing and operating the localized pretreatment facility, then individual pretreatment will be required.

4.5.3 Individual Treatment and Disposal vs. Combined Industrial - Municipal Treatment (w/Pretreatment Where Appropriate).

In order to determine the most cost-effective long-term individual treatment method, a present worth analysis has been performed for all of the individual treatment/disposal options considered for each industry. The result of this analysis is presented in Table I-4.13.

The estimated costs of constructing and operating the individual treatment/disposal systems must be compared to anticipated sewer use and connection charges for the proposed Zarqa-Ruseifa sewerage system. In order to complete the analysis, the following assumptions were used to develop present worth costs for combined treatment via the proposed Zarqa - Ruseifa sewerage system:

107

TABLE I-4.13 PRESENT WORTH ANALYSIS - INDIVIDUAL TREATMENT/DISPOSAL VS COMBINED INDUSTRIAL - MUNICIPAL TREATMENT (W/PRETREATMENT WHERE APPROPRIATE)

INDUSTRY	TREATMENT/DISPOSAL METHOD	PRESENT WORTH CAPITAL COST (1980 JD)	PRESENT WORTH OPERATING COST (1980 JD)	TOTAL PRESENT WORTH (1980 JD)
Yeast Industries Co.	Anaerobic Contact w/Land Application of Effluent	120,000	39,300	159,300
	Land Application of Raw Wastewater	20,800	26,200	47,000
	Raw Wastewater Discharge to Proposed Zarqa-Ruseifa Sewerage System	113,400	103,700	217,100
Jordan Iron and Steel Co.	Earthen Spray/Settling Pond w/Oil Skimmer and Effluent Recycle	8,020	21,100	29,120
	Wastewater Discharge to Proposed Zarqa-Ruseifa Sewerage System	16,400	907,100	923,500
Jordan Distilled Chemical Co.	Sulfide Precipitation of Mercury Cell Wastewater and Impoundment/Evaporation of Effluent	209,700	26,400	236,100
	Pretreatment of Mercury Cell Wastewater by Sulfide Precipitation w/Effluent discharge to Proposed Zarqa-Ruseifa Sewerage System	34,200	32,900	67,100

- o Operating cost items include:
  - pretreatment operating costs where appropriate (Table I-4.5)
  - sewerage system operation costs
- o sewerage system operating costs are based on an estimated charge of 0.400 JD/m^3 of wastewater treated (This is greater than the 0.375 JD/m^3 recommended to allow for surcharges)
  - recommended pretreatment facilities
  - sewer connection costs

The individual industries share of debt service costs associated with the proposed Zarqa-Ruseifa sewerage system are unknown at this time but should be added to the operating costs of the combined treatment option when established. This additional cost is not considered to have a significant impact on the analysis presented in Table I-4.13.

The capital cost of industrial sewer connections are based on the distance from the existing wastewater discharge point to an assumed first-stage trunk sewer location. In the case of the steel mill, this entails approximately 390 meters of sewer pipe to the property line at an estimated installed unit cost of 35 JD/m with approximately 4 manholes at 700 JD/ea. For the yeast plant, approximately 2.7 kilometers of gravity sewer would be required to connect to the proposed first-stage trunk sewer assumed to end at the New Ruseifa Bridge. No capital costs for connection were assumed for chlor-alkali plant since the existing outfall crosses the road where the proposed sewer serving this area is likely to be located.

Examination of Table I-4.13 indicates individual treatment/disposal of yeast plant wastewater to be by far the most cost-effective alternative for that industry at the present time. In the future as the area surrounding the yeast plant developes, it may become economical to extend the sewerage system to the yeast plant and beyond. This transition should not be difficult due to the low capital investment of the recommended land treatment/disposal scheme and population encroachment on what is presently an agricultural area.

Similarly, individual treatment and reuse of wastewater from the steel mill is illustrated as the most cost-effective alternative. Minor amounts of process wastewater are still anticipated to be discharged to the sewerage system in the form of cooling water blowdown and water

treatment (ion-exchange eluant) waste.

Individual treatment and disposal of mercury-cell wastewaters from the chlor-alkali plant is not considered economical due to the high capital cost of constructing permanent on-site evaporation impoundments. Sulfide pretreatment of mercury cell wastewater, with mercury recovery and reuse, is the preferred alternative. As discussed previously, brine purification muds from the chlor-alkali plant are best handled by evaporation in impoundments with off-site disposal of dried sludge residue.

5.0 RECOMMENDED INDUSTRIAL TREATMENT/PRETREATMENT STRATEGY

5.1 RECOMMENDED SYSTEM

Based upon the findings of the economic analyses and qualitative considerations discussed for each of the major strategies, recommended treatment/pretreatment strategies for each major industry are summarized in Table I-5.1. All industries not listed in Table I-5.1 are recommended for combined industrial-municipal treatment of process wastewater and require no pretreatment. Projected industrial process wastewater flows and loads to the proposed industrial-municipal sewerage system are summarized in Table I-5.2 by subarea. The subareas are described in the main report.

In addition to these loads, the Jordan Tanning Co. is expected to discharge about 1.3 mg/l of chromium and the Jordan Chemical Industries about 0.11 mg/l of mercury to the proposed wastewater treatment plant. The figures presented in Table I-5.2 assume that all recommended industrial treatment and pretreatment strategies will be implemented.

The estimated capital costs of recommended industrial treatment and pretreatment facilities were presented in Tables I-4.4, I-4.7, and I-4.9.

5.2 IMPLEMENTATION

In the Investigations, Preliminary Engineering Design, Financial, and Socio-Economic Analysis Report, it is recommended that a Joint Zarqa-Ruseifa Sewerage Agency be responsible for sewage collection, conveyance, and treatment throughout the planning area. This Agency should also be responsible for monitoring the discharge of wastewater into the Agency sewer system. Its responsibility could be extended to monitoring of all wastewater discharged into water courses in the planning area.

The recommended administrative procedure for controlling the industrial wastewater discharge is a permit program. Each discharger is required to obtain a permit for discharge of any wastewater other than domestic into the sewer system. The permit will specify the quantity

TABLE I-5.1 SUMMARY OF RECOMMENDED TREATMENT/PRETREATMENT STRATEGY BY INDUSTRY

INDUSTRY OR INDUSTRIAL AREA	RECOMMENDED TREATMENT/PRETREATMENT STRATEGY
Yeast Industries Co., Ltd.	Individual treatment and disposal by land application of raw wastewater
Hussein Industrial City	Localized equalization w/combined industrial-municipal treatment
Jordan Phosphate Co.	Individual treatment by coagulation and sedimentation w/direct discharge
Oriental Mineral Water Factories	Equalization w/combined industrial-municipal treatment
Transjordan Minerals Research Co.	Sedimentation w/reuse. No discharge
Jordan Overall Co., Ltd.	Equalization w/combined industrial-municipal treatment
Jordan Dairy Co., Ltd	Equalization w/combined industrial-municipal treatment
Jordan Worsted Mills	Equalization and screening w/industrial-municipal treatment
Jordan Tanning Co.	Aerated equalization, chromium pretreatment by hydroxide precipitation (w/pH control, sedimentation, and oil and grease removal), w/combined industrial-municipal treatment. Pretreatment sludge to dewatering beds w/off-site disposal
Jordan Paper and Cardboard Co.	Equalization and sedimentation pretreatment w/combined industrial-municipal treatment
Jordan Iron and Steel Co.	Individual treatment by sedimentation and oil removal w/recycle to process. No discharge
Jordan Distilled Chemical Co.	Pretreatment of mercury cell wastewater by sulfide precipitation (pH control, sulfide control, sedimentation, mercury recovery) w/combined industrial-municipal treatment. Individual treatment and disposal of brine purification mud by evaporation ponds w/off-site disposal of residual
Jordan Army Blanket Factory	Equalization and screening pretreatment w/combined industrial-municipal treatment
Industrial Area "B" (Arab Brewery Jordan Brewery Eagle Distilleries, Zeidan Refrigeration)	Localized pretreatment by aerated equalization w/combined industrial-municipal treatment
Jordan Ceramic Industries Co.	Individual treatment by sedimentation and reuse in process. No discharge
Jordan Tiles Co.	Individual treatment by sedimentation and reuse in process. No discharge

TABLE I-5.2

SUMMARY OF PROJECTED INDUSTRIAL WASTEWATER FLOWS AND WASTE LOADS TO COMBINED INDUSTRIAL-MUNICIPAL TREATMENT

SUBAREA	INDUSTRY	1984 AVG FLOW M^3/D	1984 BOD_5 Kg/D	1984 S.S. Kg/D	1990 AVG FLOW M^3/D	1990 BOD_5 Kg/D	1990 S.S. Kg/D	2000 AVG FLOW M^3/D	2000 BOD_5 Kg/D	2000 S.S. Kg/D	2020 AVG FLOW M^3/D	2020 BOD_5 Kg/D	2020 S.S. Kg/D
IV	New Industrial Development	230	190	190	580	470	470	1170	940	940	2340	1880	1880
	Subtotal - Subarea IV	230	190	190	580	470	470	1170	940	940	2340	1880	1880
	Amounts to Sewers	0	0	0	580	470	470	1170	940	940	2340	1880	1880
VIII	Jordan Ceramic and Firebrick Co.[8]	1	Neg'l	Neg'l	1	Neg'l	Neg'l	1	Neg'l	Neg'l	1	Neg'l	Neg'l
	United Factories, Ltd	36	1000	1	47	1310	2	65	1810	3	65	1810	3
	Imperial Underwear Co.	37	18	6	37	24	7	37	33	10	37	33	10
	Arab Breweries Co.	150	135	52	135	200	77	135	200	77	135	200	77
	Jordan Brewery Co., Ltd.	310	270	110	260	380	150	260	380	150	260	380	150
	Eagle Distilleries	210	1400	17	210	1830	22	290	2520	31	290	2520	31
	Zaidan Refrigeration Co.	4	4	2	5	5	2	7	7	3	7	7	3
	Big Zarqa Mill	2	Neg'l	Neg'l	2	Neg'l	Neg'l	3	Neg'l	Neg'l	3	Neg'l	Neg'l
	Cream Tex	10	5	2	13	7	2	18	10	4	18	10	4
	Subtotal - Subarea VIII	760	2832	190	710	3756	262	816	4960	277	816	4960	278
	Amounts to Sewers	760	2832	190	710	3756	262	816	4960	277	816	4960	278
IX	Jordan Match Co.	7	Neg'l	Neg'l	9	Neg'l	Neg'l	13	Neg'l	Neg'l	13	Neg'l	Neg'l
	Jordan Ceramic Ind. Co.[8]	3	Neg'l	Neg'l	4	Neg'l	Neg'l	5	Neg'l	Neg'l	5	Neg'l	Neg'l
	New Industrial Development	285	235	235	730	585	585	1465	1170	1170	2930	2340	2340
	Int'l Leather Product Co.	2	Neg'l	Neg'l	3	Neg'l	Neg'l	5	Neg'l	Neg'l	5	Neg'l	Neg'l
	Subtotal - Subarea IX	297	235	235	746	585	585	1488	1170	1170	2953	2340	2340
	Amounts to Sewers	0	0	0	0	0	0	1488	1170	1170	2953	2340	2340
X	Jordan Tanning Co., Ltd	700	770	35	500	930	35	690	1280	35	690	1280	35
	Jordan Paper & Cardboard	2310	400	277	1390	240	167	1390	240	167	1390	240	167
	Jordan Iron & Steel Co.	1260	Neg'l	Neg'l	43	Neg'l	Neg'l	43	Neg'l	Neg'l	43	Neg'l	Neg'l
	Jordan Army Blanket Fact.	300	180	50	300	180	50	300	180	50	300	180	50
	Arab Thinner Factory	1	Neg'l	Neg'l	1	Neg'l	Neg'l	1	Neg'l	Neg'l	1	Neg'l	Neg'l
	Jopolymer	9	Neg'l	Neg'l	12	Neg'l	Neg'l	16	Neg'l	Neg'l	16	Neg'l	Neg'l
	Clenkers, Ltd.	12	Neg'l	36	12	Neg'l	36	12	Neg'l	36	12	Neg'l	36
	Jordan Fiberglass Co.	1	Neg'l	Neg'l	1	Neg'l	Neg'l	1	Neg'l	Neg'l	1	Neg'l	Neg'l
	Jordan Chemical Industries[8]	36	Neg'l	Neg'l	40	Neg'l	Neg'l	56	Neg'l	Neg'l	56	Neg'l	Neg'l
	New Industrial Development	300	235	235	730	585	585	1465	1170	1170	2930	2340	2340
	Subtotal - Subarea X	4929	1585	633	3029	1935	863	3974	2870	1453	5439	4040	2628
	Amounts to Sewers	4929	1585	633	3029	1935	863	3974	2870	1453	5439	4040	2628

TABLE I-5.2 (Cont'd)

SUMMARY OF PROJECTED INDUSTRIAL WASTEWATER FLOWS AND WASTE LOADS TO COMBINED INDUSTRIAL-MUNICIPAL TREATMENT

SUBAREA	INDUSTRY	1984 AVG FLOW M^3/D	1984 BOD_5 Kg/D	1984 S.S. Kg/D	1990 AVG FLOW M^3/D	1990 BOD_5 Kg/D	1990 S.S. Kg/D	2000 AVG FLOW M^3/D	2000 BOD_5 Kg/D	2000 S.S. Kg/D	2020 AVG FLOW M^3/D	2020 BOD_5 Kg/D	2020 S.S. Kg/D
XII	Noralux Industrial Comm.Co.	2	Neg'l	4	5	Neg'l	5	7	Neg'l	7	7	Neg'l	7
	Kholaghassi Foam & Mattress Factory	1	Neg'l	Neg'l	1	Neg'l	Neg'l	2	Neg'l	Neg'l	2	Neg'l	Neg'l
	Subtotal - Subarea XII	3	0	4	6	0	5	9	0	7	9	0	7
	Amounts to Sewers	3	0	4	6	0	5	9	0	7	9	0	7
XIII	Oriental Mineral Water Factories (7-Up)	200	550	270	200	550	270	200	550	270	200	550	270
	Transjordan Mineral* Research Co.	1	Neg'l	Neg'l	1	Neg'l	Neg'l	2	Neg'l	Neg'l	2	Neg'l	Neg'l
	Jordan Overall Co., Ltd.	7	Neg'l	Neg'l	1	Neg'l	Neg'l	1	Neg'l	Neg'l	1	Neg'l	Neg'l
	Jordan Dairy Co., Ltd	115	520	210	150	680	280	210	940	380	210	940	380
	Jordan Worsted Mills	93	54	360	120	71	470	170	98	650	170	98	650
	Sultan Plastics Co.	1	Neg'l	Neg'l	1	Neg'l	Neg'l	1	Neg'l	Neg'l	1	Neg'l	Neg'l
	Subtotal - Subarea XIII	417	1124	840	473	1301	1020	584	1588	1300	584	1588	1300
	Amounts to Sewers	417	1124	840	473	1301	1020	584	1588	1300	584	1588	1300
XVII	Oriental Star Distillery	44	10	10	32	10	10	39	12	10	39	12	12
	Hussein Industrial City (I.C.A.)												
	Detergent Factory	78	3	3	78	4	4	78	5	5	78	5	5
	Soap Factory	1515	100	20	99	130	34	138	180	65	138	180	65
	Ice Cream Factory	25	41	16	8	53	21	11	74	29	11	74	29
	Cosmetics Factory	1	Neg'l	Neg'l	1	Neg'l	Neg'l	2	Neg'l	Neg'l	2	Neg'l	Neg'l
	Paint Factory	3	Neg'l	5	4	Neg'l	6	6	Neg'l	8	6	Neg'l	8
	Subtotal - Subarea XVII	1666	154	54	222	197	75	274	271	119	274	271	119
	Amounts to Sewers	1666	154	54	222	197	75	274	271	119	274	271	119
XVIII	Jordan Phosphate Co.*	4630	Neg'l	686000	4630	Neg'l	686000	0	0	0	0	0	0
	Amounts to Sewers	0	0	0	0	0	0	0	0	0	0	0	0
XIX	Yeast Industries Co., Ltd	113	300	100	150	390	130	205	540	180	205	540	180
	Amounts to Sewers	0	0	0	0	0	0	0	0	0	0	0	0
	Total All Subareas	13040	6420	688246	10546	8643	690410	8520	12339	5449	12620	15619	8732
	Amounts to Sewers	7769	5695	1721	5020	7668	2695	8315	11799	5269	12620	15619	8732

* Produces non-biodegradable wastewater containing sand, silt, cement, dust or other inorganic substances which can best be treated on-site in conjunction with water conservation measures. Flows shown are sanitary wastewaters only.

and quality of wastewater that may be discharged into the system. The responsibility for construction and day-to-day operation of any pre-treatment facilities remains with each individual industry.

The Joint Agency's staff should include a specially-trained industrial waste monitoring team to inspect the wastewater from each discharger. Each discharger would be required to have an approved method of measuring the quantity and quality of the discharge on a regular basis. The Agency team would periodically take check samples and flow measurements.

This type of system will control not only the large industrial dischargers but also the small commercial dischargers such as gas stations and machine shops. While it would be prohibitively expensive to monitor each of the small commercial establishments, some inspection could be made of those which are prime candidates for pollutant contribution. For example, gas stations might contribute waste motor oil and machine shops might contribute metal shavings. Any one of these installations, by itself, would probably be insignificant. The total of all installations could be significant. Inspection procedures would assure that some method of pretreatment was being used.

In the initial phases of the sewer collection system development, only the more densely populated areas will be served. The commercial establishments in the unsewered areas could also be placed under the jurisdiction of the Joint Agency. Each of the unsewered establishments should be required to have some type of treatment system. Inspection procedures could help to assure that noraw sewage is discharged into any water courses.

Appendix A.3 is a Sample Standard for Discharge into the Sewers of the Zarqa-Ruseifa Joint Sewerage Agency. This sample standard allows the Agency some discretion in evaluation of individual discharges.

Across-the-board industrial pretreatment standards for heavy metals and other toxic pollutants might best be avoided at this time. The important issue is total load to the joint industrial-municipal

115

treatment plant. Focus should be on key metals such as Hg, Zn, Pb, Cd, Cr, Ni and key organics such as phenol, cyanide, oil and grease and other things such as sulfides. Prior to the introduction into the sewerage system of wastewaters from new industries, new industrial processes, or substantially increased industrial production from existing facilities, the impact of the industrial wastewater upon the treatment plant should be evaluated to determine if the increased waste loads and/or toxic constituents: interfere with the operation or performance of the treatment facility; pass-through the treatment plant in concentrations which could significantly degrade water quality in the Zarqa River; or interfere with wastewater treatment plant sludge use or disposal.

5.3 SPECIAL GROUNDWATER CONSIDERATION

Earthen basins were recommended for sludge dewatering beds for the tannery and evaporation ponds for the brine purification muds from the chlor-alkali plant. While there are some potential disadvantages of on-site storage, as stated on pg. 4-17, it appears to be the best alternative available to date on a technical, environmental, and economic basis. As established in the report, the tannery sludge and chlor-alkali brine muds must be segregated from the combined industrial-municipal sewerage system. These semi-solid (sludge) wastes must be disposed of in an environmentally acceptable manner. The current method of disposal used for the Amman Wastewater Treatment Plant sludge (viz. open burning with refuse at the landfill) is not considered acceptable for these wastes. Lacking any better disposal alternatives, the on-site storage alternative provides sludge volume and weight reduction as well as storage for whatever period of time is necessary to develop an acceptable disposal site.

The potential exists for groundwater contamination from salts and from heavy metals if neutralization or pretreatment is not operated properly; however, this potential is drastically reduced from present practices where groundwater contamination from poorly or untreated wastes is a fact, not just a possibility. As previously outlined, liners will be required to prevent migration of pollutants, be they natural (i.e, clays) or synthetic (i.e., impermeable membrances of PVC or neoprene). Natural liners should have a minimum thickness of

116

12 inches and an in-place permeability of not more than $1x10^{-7}$ cm/sec. Alternatively, a synthetic liner should be compatible with the waste stream and have a minimum thickness of 4 millimeters. The integrity of the liner should be physically inspected after every dredging operation and repaired, if necessary, prior to redeposition of sludge.

A minimum of three groundwater monitoring wells should be installed, one upstream and two downstream, around each earthen basin or group of earthen basins. These wells should be monitored semiannually during the wet season (i.e. from October to April) when groundwater levels are high. Suggested monitoring parameters for the proposed tannery lagoons are: total chromium, pH, and total dissolved solids or specific conductivity. Suggested monitoring parameters for the proposed chlor-alkali brine mud evaporation ponds are pH and total dissolved solids or specific conductivity.

The liners, coupled with a groundwater monitoring system should provide adequate protection of groundwater resources.

REFERENCES

1. "Development Document for Effluent Limitations Guidelines and New Source Performance Standards for the Unbleached Kraft and Semichemical Pulp Segment of the Pulp, Paper, and Paperboard Mills Point Source Category", U.S. Environmental Protection Agency, EPA-440/1-74-025-a, May 1974.

2. "Summary Report on the Beverage Industry", U.S. Environmental Protection Agency, Office of Water Programs, Division of Applied Technology, January 1972.

3. "Development Document for Effluent Limitations Guidelines and New Source Performance Standards for the Leather Tanning and Finishing Point Source Category", U.S. Environmental Protection Agency, EPA-440/1-74-016-a,

4. Nemerow, N.L., Liquid Waste of Industry - Theory Practice & Treatment, Addison-Weslley Publishing Co., 1971.

5. Shreve, R.N. and Brink, L.A., Chemical Process Industries, Fourth Ed., McGraw - Hill Book Co., 1977.

6. "Effluent Guidelines and Standards; Electroplating Point Source Category; Pretreatment Standards for Existing Sources", Federal Register, Vol. 44, No.175, Friday, Sept. 7, 1979.

7. Patterson, J.W., Wastewater Treatment Technology, Ann Arbor Science Publishers, Inc., 1977.

8. I. Kruger A/S, "Amman Sewage Treatment Plant", June 1977.

9. VBB/Fawzi and Assoc., "Water Resources Study for Amman Water Supply", November 1976.

10. "Guidelines for Sewage Sludge Utilization on Agricultural Lands", Ad Hoc Joint Committee of Ontario Ministry of Agriculture and Food - Ontario Ministry of the Environment, April 1978.

11. "Process Design Manual for Land Treatment of Municipal Wastewater", U.S. Environmental Protection Agency, Environmental Research Information Center Technology Transfer, EPA 625/1-77-008, October 1977.

12. Equipment Manufacturer Literature, "Parkson Lamella TM Gravity Settler/Thickener Bulletin LT-101", Parkson Corp., 1977.

13. Moorman, F., "The Soils of East Jordan", A Report to the Government of Jordan by the Food and Agriculture Organization of the United Nations, Rome, 1959.

14. Lund, H.F. ed., Industrial Pollution Control Handbook, McGraw - Hill Book Co., 1971.

15. Eckenfelder, W.W. Jr., Industrial Water Pollution Control, McGraw - Hill Book Co., 1966.

APPENDIX A.1

ABBREVIATED INDUSTRIAL WASTE

SURVEY FORMS

Note: Numbers to the right of the last decimal point of the table designation correspond to the industry code number used on the industrial location map (Figure I-2.1). Example: Table I-A.1.14 is the designation for industry code number 14 or Jordan Tanning Co.

TABLE I-A.1.1

SUMMARY OF INDUSTRIAL WASTE SURVEY

Industry: Yeast Industries Co. Ltd. Location: Ruseifa

Principal Activities: Yeast production

No. Employees: 22 Operation: 24 Hr./day 6 days/wk

Raw Materials (tonne/yr.): Beet molasses, phosphates, $(NH_4)\ SO_4$, $Mg\ SO_4$ (nutrients), $H_2\ SO_4$ (PH Control)

Products (tonne/yr.): Fresh and dry bakers yeast.

Water Source	Average Consumption
Municipal (Ruseifa)	0.02 m^3/day
Private Well	113 m^3/day

Industrial Processes	Water Use	Wastewater Flow
floor & tank wash +	m^3/day	m^3/day
vacuum filtrate (spent nutrient)	109 m^3/day	109 m^3/day
cooling water	1 m^3/day	1 m^3/day
boiler blowdown	3 m^3/day	3 m^3/day

Wastewater Flow	Process	Cooling	Sanitary	Storm	Total
Ave. (m^3/day)	112	1	0.02		113.02
Max. (m^3/day)					

Wastewater Treatment /Disposal: Sanitary wastewater to cesspool; process wastewater and boiler blowdown to Wadi Zarqa through separate outfalls.

Comments: Boiler blowdown @ 40 1/min (intermittent) - appears clean and hot. Process water highly odorous and turbid. Discoloration of river water after outfall w/heavy solids deposits near outfall.

TABLE I-A.1.2

SUMMARY OF INDUSTRIAL WASTE SURVEY

Industry: Jordan Phosphate Mines Co Ltd. Location: RUSEIFA

Principal Activities: Phosphate mining and beneficiation

No. Employees: 823 Operation: 24 Hr./day 6 days/wk

Raw Materials (tonne/yr.): Phosphate rock (750,000 dry tonne/yr)

Products (tonne/yr.): 66-68 grade (% bpl), 70-72 grade (% bpl) standard grade and beneficiation grade, Jorphos (R) (ESP dust)

Water Source	Average Consumption
Municipal (Ruseifa)	- m^3/day
Private Well	1800 m^3/day

Industrial Processes	Water Use	Wastewater Flow
Dryer Scrubbers (*3,*4)	360 m^3/day	240 m^3/day
Beneficiation plant	1440 m^3/day	1440 m^3/day
	m^3/day	m^3/day
	m^3/day	m^3/day

Wastewater Flow	Process	Cooling	Sanitary	Storm	Total
Ave. (m^3/day)	1680		16		1696
Max. (m^3/day)					

Wastewater Treatment /Disposal: Scrubber wastewater to 3 concrete tanks with overflow to Wadi. Tailing slimes to thickener. thickener underflow to tailing pond (2-Cells) No overflow - Sanitary wastewater to cesspools.

Comments: Mines have at least 15 years reserve capacity.

TABLE I-A.1.3

SUMMARY OF INDUSTRIAL WASTE SURVEY

Industry: Orient Star Distilleries Co. Location: Ruseifa

Principal Activities: Alcoholic beverage manuf. and bottling

No. Employees: 14 Operation: 8 Hr./day 6 days/wk

Raw Materials (tonne/yr.): Water, alcohol, anis seeds

Caustic Soda (4 Kg/wk), tri-polyphosphate (4 Kg/wk)

Products (tonne/yr.): Arak, Brandy — 150,000 l/yr.

Water Source	Average Consumption
Municipal (Ruseifa)	0.5 m^3/day
Private Well	29 m^3/day

Industrial Processes	Water Use	Wastewater Flow
Redistillation cooling	21 m^3/day	21 m^3/day
Bottle washing	8 m^3/day	8 m^3/day
Caustic dump	0.5 m^3/wk	0.5 m^3/~~day~~ wk
	m^3/day	m^3/day

Wastewater Flow	Process	Cooling	Sanitary	Storm	Total
Ave. (m^3/day)	8.2	21.0	0.2		29.4
Max. (m^3/day)					

Wastewater Treatment /Disposal: Process wastewater to Wadi Zarqa, Sanitary wastewater to cesspool.

Comments: 50% expansion within 1 yr.

TABLE I-A.1.4a

SUMMARY OF INDUSTRIAL WASTE SURVEY

Industry: Hussein City (Detergent Factory) Location: Ruseifa

Principal Activities: ABS detergent manufacture.

No. Employees: 45 Operation: 8 Hr./day 6 days/wk

Raw Materials (tonne/yr.): Alkyl benzyl sulfonate Perfumes, brightners, Sodium tripoly phosphates (1500 tonne/yr) Sodium perborate whitener (140 tonne/yr), cont. d.- see comment

Products (tonne/yr.): Surf (R) (3000 Tonne/yr) Horizon (R) (500 tonne/yr), Persil 70 (high phosphate detergent 500 tonne/yr)

Water Source	Average Consumption
Municipal ( )	_____ m^3/day
Private Well	48 m^3/day

Industrial Processes	Water Use	Wastewater Flow
Cooling	36 m^3/day	36 m^3/day
Cleaning	2 m^3/day	2 m^3/day
	m^3/day	m^3/day
	m^3/day	m^3/day

Wastewater Flow	Process	Cooling	Sanitary	Storm	Total
Ave. (m^3/day)	38		1.0		39
Max. (m^3/day)					

Wastewater Treatment /Disposal: Sanitary wastewater to cesspool. Process and cooling water to main cesspool w/overflow to Zarqa River.

Comments: sodium sulfate, sodium silicate, sodium carboxy - metyl cellulose, non-ionic detergents, fatty acids, caustic soda.

TABLE I-A.1.4b.

SUMMARY OF INDUSTRIAL WASTE SURVEY

(Soap Factory)

Industry: Hussein Industrial City Location: Ruseifa

Principal Activities: Bar soap production

No. Employees: 45 Operation: 8 Hr./day 6 days/wk

Raw Materials (tonne/yr.): NaOH (360 tonne /yr), NaCl (20 tonne/yr)

Oils (palm , coconut, vegetable - 400 tonne/yr)

beef tallow (1000 tonne/yr)

Products (tonne/yr.): Bar soap (1560 Tonne/yr)

Water Source	Average Consumption
Municipal ( )	____ m^3/day
Private Well	504.9 m^3/day

Industrial Processes	Water Use		Wastewater Flow	
Machine cooling Water	8	m^3/~~day~~ hr.	8	m^3/~~day~~ hr
Product solution make-up	5	m^3/day	-	m^3/day
Floor tank wash	minor	m^3/day	minor	m^3/day
Sewer lye sol'n. dump	-	m^3/day	0.75	m^3/day
Barometric condenser water	13	m^3/ hr.	13	m^3/hr.

Wastewater Flow	Process	Cooling	Sanitary	Storm	Total
Ave. (m^3/day)	312	192	0.9	-	504.9
Max. (m^3/day)					

Wastewater Treatment /Disposal: Barometric condenser water combined with machine cooling water to small separate cesspool w/overflow to main cesspool and Zarqa River. Same of the cooling water is used for washing and ponds in adjacent restaurant (Lebanon Family Rest.). Sewer lye dumped once per week to main ~~Connection~~ cesspool.

Comments: Plan to install another production line by 1982 w/production capacity of 1.5 tonne/hr. (@ 8 hr./day Operation = 12 tonne/day). WW flow and water use will increase by 240 percent.

TABLE I-A.1.4c

SUMMARY OF INDUSTRIAL WASTE SURVEY

Industry: Hussein Industrial City (Ice Cream Factory) Location: Ruseifa

Principal Activities: Ice cream manufacture

No. Employees: 50 Operation: 8 Hr./day 6 days/wk

Raw Materials (tonne/yr.): Dry milk, suger, vegetable fat, flavor, water, emmulsifier citric acid.

Products (tonne/yr.): Ice cream (6 tonne/day).

Water Source	Average Consumption
Municipal ( )	_____ m^3/day
Private Well	30 m^3/day

Industrial Processes	Water Use	Wastewater Flow
Product make up water	5.4 m^3/day	- m^3/day
Floor wash	_____ m^3/day	- m^3/day
Tank Wash	4 m^3/day	4 m^3/day
Compressor cooling	19.6 m^3/day	19.6 m^3/day

Wastewater Flow	Process	Cooling	Sanitary	Storm	Total
Ave. (m^3/day)	4	19.6	1		24.6
Max. (m^3/day)					

Wastewater Treatment /Disposal: One main cesspool in the storage area for sanitary and process wastewater from all factories. Main cesspool dimentions 6m x 20m x5m deep.

Comments: Cesspools overflow to Zarqa River.

TABLE I-A.1.4d

SUMMARY OF INDUSTRIAL WASTE SURVEY

Industry: Hussein Ind. City (Cosmetics) Location: Ruseifa

Principal Activities: Cosmetics formulation (toothpaste, shampoo, shave Cream)

No. Employees: 32 Operation: 8 Hr./day 6 days/wk

Raw Materials (tonne/yr.): Aluminum hydrate (for toothpaste)

Sorbitol (R) (Glycerine) (for toothpaste)

Texapon (R), Empicol (R) (for Shampoo)

Products (tonne/yr.): Shampoo (320 Tonne/yr)

Toothpaste (17 - 18 tonne/yr), shaving creme (15 tonne/yr)

Water Source	Average Consumption
Municipal ( )	____ m^3/day
Private Well	1.5 m^3/day

Industrial Processes	Water Use	Wastewater Flow
Clean-up	0.2 m^3/day	0.2 m^3/day
	____ m^3/day	____ m^3/day
	____ m^3/day	____ m^3/day
	____ m^3/day	____ m^3/day

Wastewater Flow	Process	Cooling	Sanitary	Storm	Total
Ave. (m^3/day)	0.2		0.64		0.82
Max. (m^3/day)					

Wastewater Treatment /Disposal: Sanitary wastewater to cesspool. Process wastewater to main cesspool w/overflow to Zarqa River.

Comments: Sewer drawings not available for verification of disposal method.

TABLE I-A.1.4c

SUMMARY OF INDUSTRIAL WASTE SURVEY

(Paint Factory)

Industry: Hussein Industrial City Location: Ruseifa

Principal Activities: Paint formulation

No. Employees: 25 Operation: 8 Hr./day 6 days/wk

Raw Materials (tonne/yr.): (35 tonnes/yr) White mineral spirits, pigments, zylene (100 kg/yr for tank clean)

Products (tonne/yr.): emmulsion (latex) paint, oil-base decorative paints, varnish. Total Production 150,000 gal./yr.

Water Source	Average Consumption
Municipal ( )	_____ m^3/day
Private Well	3.0 m^3/day

Industrial Processes	Water Use	Wastewater Flow
Latex make-up	0.3 m^3/day	0 m^3/day
Constic & Water cleaning	1.5 m^3/day	1.5 m^3/day
	m^3/day	m^3/day
	m^3/day	m^3/day

Wastewater Flow	Process	Cooling	Sanitary	Storm	Total
Ave. (m^3/day)	1.5	1.0	0.5		3.0
Max. (m^3/day)					

Wastewater Treatment /Disposal:

Small separate cesspool. Segregation of process and sanitary wastes unknown.

Comments: Sewer drawings not available for verification of disposal method.

TABLE I-A.1.4f

SUMMARY OF INDUSTRIAL WASTE SURVEY

(Biscuit Factory)

Industry: Hussein Industrial City Location: Ruseifa

Principal Activities: biscuit and cookie manufacture

No. Employees: _____ Operation: 8 Hr./day 6 days/wk

Raw Materials (tonne/yr.): _____

Products (tonne/yr.): Biscuits and cookies

Water Source	Average Consumption
Municipal ( )	_____ m^3/day
Private Well	? 5 m^3/day

Industrial Processes	Water Use	Wastewater Flow
dough making	5 m^3/day	- m^3/day
cooling-plastic wrap machine	minor m^3/day	minor m^3/day
	_____ m^3/day	_____ m^3/day
	_____ m^3/day	_____ m^3/day

Wastewater Flow	Process	Cooling	Sanitary	Storm	Total
Ave. (m^3/day)	_____	minor	_____	_____	_____
Max. (m^3/day)	_____	_____	_____	_____	_____

Wastewater Treatment /Disposal: Unknown disposal method for sanitary wastewater.

Comments: dry process

128

TABLE I-A.1.5

SUMMARY OF INDUSTRIAL WASTE SURVEY

Industry: Oriental Mineral Water Factories (7-Up) Location: Ruseifa

Principal Activities: Non-alcoholic beverage bottling.

No. Employees: 52 Operation: 8 Hr./day 6 days/wk

Raw Materials (tonne/yr.): Sugar, flavor, citric acid, caustic soda (bottle wash)

Products (tonne/yr.): Carbonated soft-drinks (936 m^3/yr)

Water Source	Average Consumption
Municipal (Ruseifa)	38 m^3/day
Private Well *	58 m^3/day

Industrial Processes	Water Use	Wastewater Flow
Product Make-up	3 m^3/day	m^3/day
Bottle cleaning	92 m^3/day	92 m^3/day
	m^3/day	m^3/day
	m^3/day	m^3/day

Wastewater Flow	Process	Cooling	Sanitary	Storm	Total
Ave. (m^3/day)	92		1		93
Max. (m^3/day)					

Wastewater Treatment /Disposal: Cesspool for sanitary wastewater, process wastewater to Wadi Zarqa w/o treatment

Comments: * Relative percentage of water use from private well increases in the winter/spring due to higher well yeild. High PH wastewater from bottle wash and lime-soda softening sludge waste. Plan to increase production by 6 times present level by 1981. Water use and wastewater flow estimated to increase to 25 m^3/hr.

TABLE I-A.1.6

SUMMARY OF INDUSTRIAL WASTE SURVEY

Research Co.

Industry: Transjordan Minerals Location: Ruseifa

Principal Activities: Marble and terrazo tiles manufacture

No. Employees: 10 Operation: 8 Hr./day 6 days/wk

Raw Materials (tonne/yr.): Cement, sand, marble, gravel, water

Products (tonne/yr.): Marble and terrazo tiles

Water Source	Average Consumption
Municipal (Ruseifa)	0.2 m^3/day
Private Well	4 m^3/day

Industrial Processes	Water Use	Wastewater Flow
Cement making	4.0 m^3/day	0 m^3/day
Wetcutting and grinding	unk.* m^3/day	0 m^3/day
	m^3/day	m^3/day
	m^3/day	m^3/day

Wastewater Flow	Process	Cooling	Sanitary	Storm	Total
Ave. (m^3/day)			0.2		0.2
Max. (m^3/day)					

Wastewater Treatment /Disposal: Sanitary wastewater to cesspool.

*Wastewater from wetcutting and grinding to 3 concrete settling basins with recycle to process.

No process wastewater discharge.

Comments:

130

TABLE I-A.1.7

SUMMARY OF INDUSTRIAL WASTE SURVEY

Industry: Jordan Overall Co. Ltd. Location: Ruseifa

Principal Activities: Sheet metal appliance manufacture

No. Employees: 125 Operation: 8 Hr./day 6 days/wk

Raw Materials (tonne/yr.): Sheet steel (900 tonne/yr)

vitreous enamel (Porcelain) (100 tonne/yr)

epoxy paint (15 tonne/yr)

Products (tonne/yr.): Gas oven/range 13,000 units/yr (1980)

Washing machines 12,000 units/yr (1980)

Water Source	Average Consumption
Municipal (Ruseifa)	1.5 m^3/day
Private Well	12.0 m^3/day

Industrial Processes	Water Use	Wastewater Flow
Sheet steel pickling line	4 m^3/day	4 m^3/day
Porcelain enamel milling	1 m^3/day	1 m^3/day
Steam generating	7 m^3/day	7 m^3/day
Acid pickling wastewater	- m^3/day	10 m^3/day
Alkaline rinse wastewater dump	- m^3/day	8 m^3/wk

Wastewater Flow	Process	Cooling	Sanitary	Storm	Total
Ave. (m^3/day)	12		1.5		13.5
Max. (m^3/day)					

Wastewater Treatment /Disposal: Sanitary to cesspool.

Process wastewater to Wadi Zarqa w/o treatment.

Comments: 90% of production is exported. Existing location could expand by up to 25% after which plan to move to new location (5± yrs) in NW Zarqa. Existing facility would be converted to warehouse w/o process WW.

TABLE I-A.1.8

SUMMARY OF INDUSTRIAL WASTE SURVEY

Industry: Jordan Dairy Co. Location: Ruseifa

Principal Activities: Milk and milk products processing

No. Employees: 80 Operation: 16 Hr./day 6 days/wk

Raw Materials (tonne/yr.): Dry milk,
Caustic soda (100 Kg/day) cleaners, detergent (10 kg/day)
nitric acid (50 Kg/day)

Products (tonne/yr.): pasteurized milk, yogurt , lebeneh
white cheese, cheller cheese, ice cream. Total = 150,000 l/day

Water Source	Average Consumption
Municipal (Ruseifa)	1.9 m^3/day
Private Well	250 m^3/day

Industrial Processes	Water Use	Wastewater Flow
Floor Wash	49.8 m^3/day	49.8 m^3/day
Tank rinse	45.0 m^3/day	45.0 m^3/day
Reconstituted milk	150.0 m^3/day	150.0 m^3/day
Brine solution dump	0.7 m^3/day	0.7 m^3/day

(Cont'd. -see comments)

Wastewater Flow	Process	Cooling	Sanitary	Storm	Total
Ave. (m^3/day)	100		1.9		101.9
Max. (m^3/day)					

Wastewater Treatment /Disposal: Cesspool, for sanitary wastewater.
Process wastewater to Wadi Zarqa.

Comments: Spent caustic dump 3.0 m^3/day
Spent nitric dump 1.5 m^3/day

TABLE I-A.1.9

SUMMARY OF INDUSTRIAL WASTE SURVEY

Industry: Jordan Worsted Mill Co. Location: Ruseifa

Principal Activities: Wet finishing, scouring, dry processing, and knitting of woolen fabric.

No. Employees: 300 Operation: 16 Hr./day 6 days/wk

Raw Materials (tonne/yr.): Wool yarn (dyed), sodium carbonate (2.25 tonne/mo.), formic acid (0.42 tonne/mo.), aromine potash soft soap (0.8 tonne/mo.)

Products (tonne/yr.): 1,100,000 yd ^{2}/yr wool fabrics

Water Source	Average Consumption
Municipal (Ruseifa)	_____ m^3/day
Private Well	93 m^3/day

Industrial Processes	Water Use	Wastewater Flow
Fabric scour	87 m^3/day	87 m^3/day
Fabric damping	minor m^3/day	0 m^3/day
	m^3/day	m^3/day
	m^3/day	m^3/day

Wastewater Flow	Process	Cooling	Sanitary	Storm	Total
Ave. (m^3/day)	87		6		93
Max. (m^3/day)	100				

Wastewater Treatment /Disposal: Cesspool for sanitary wastewater process wastewater to Wadi Zarqa

Comments:

TABLE I-A.1.10

SUMMARY OF INDUSTRIAL WASTE SURVEY

Industry: Sultan Plastic Location: Ruseifa

Principal Activities: Manufacture of thermo-formed plastic Containers

No. Employees: 30 Operation: 8 Hr./day 6 days/wk

Raw Materials (tonne/yr.):

Products (tonne/yr.): Plastic containers

Water Source	Average Consumption
Municipal (Ruseifa)	0.6 m^3/day
Private Well	m^3/day

Industrial Processes	Water Use	Wastewater Flow
Non-contact cooling	neg.* m^3/day	neg. m^3/day
IX regeneration eluent	neg. m^3/day	neg. m^3/day
	m^3/day	m^3/day
	m^3/day	m^3/day

Wastewater Flow	Process	Cooling	Sanitary	Storm	Total
Ave. (m^3/day)			0.6		
Max. (m^3/day)					

Wastewater Treatment /Disposal: Sanitary wastewater to cesspool. No process wastewater, Minor amt. of IX brine solution effluent from make-up cooling water treatment. Recirculate non-contact cooling water

Comments:

* neg. : negligible.

TABLE I-A.1.11

SUMMARY OF INDUSTRIAL WASTE SURVEY

Commercial Co.

Industry: Noralux Industrial Location: Awjan Al Janubi

Principal Activities: Paint formulation

No. Employees: 18 Operation: 8 Hr./day 6 days/wk

Raw Materials (tonne/yr.): (1) Pigments: TiO_3, $CaCO_3$; Aluminum - Silicate; white extender pigments (mostly organic color pigments long-oil alkyd resin for oil base medium (soybean and linseed oils)

(2) Polyvinyl acetate latex medium. latex & oil-base decorative paint (approx. 200,000 gal./yr.)

Products (tonne/yr.): (see comments)

Water Source	Average Consumption
Municipal (Zarqa)	2.3 m^3/day
Private Well	m^3/day

Industrial Processes	Water Use	Wastewater Flow
Latex paint make up	0.65 m^3/day	m^3/day
Latex tank rinse	1.2 m^3/day	1.2 m^3/day
Waste mineral spirits	- m^3/day	minor m^3/day
	m^3/day	m^3/day

Wastewater Flow	Process	Cooling	Sanitary	Storm	Total
Ave. (m^3/day)	1.2		0.4		1.6
Max. (m^3/day)					

Wastewater Treatment /Disposal: Process and sanitary wastewater goes to a cesspool.

Comments: (3) Solvents: water for latex white mineral spirits for Oil-base paints.

(4) Chemicals: preservatives; thickener; anticorrosive agents (small amts.)

135

TABLE I-A.1.12

SUMMARY OF INDUSTRIAL WASTE SURVEY

Factory

Industry: Kologhassi Foam & Mattress Location: Awjan Al Janubi

Principal Activities: Latex foam and mattress manufacture

No. Employees: 25 Operation: 8 Hr./day 6 days/wk

Raw Materials (tonne/yr.): Latex foam blocks and latex foam mattresses

Products (tonne/yr.):

Water Source	Average Consumption
Municipal (Zarqa)	22.5 m^3/day
Private Well	m^3/day

Industrial Processes	Water Use	Wastewater Flow
Process make-up water	22.0 m^3/day	0 m^3/day
	m^3/day	m^3/day
	m^3/day	m^3/day
	m^3/day	m^3/day

Wastewater Flow	Process	Cooling	Sanitary	Storm	Total
Ave. (m^3/day)			0.5		
Max. (m^3/day)					

Wastewater Treatment /Disposal: Sanitary wastewater to cesspool. No process wastewater discharge.

Comments:

16

TABLE I-A.1.13

SUMMARY OF INDUSTRIAL WASTE SURVEY

Industry: Cream Tex Location: Awjan Al Janubi

Principal Activities: Textile finishing

No. Employees: 20-25 Operation: 8 Hr./day 6 days/wk

Raw Materials (tonne/yr.): White Polyester greige goods (bolt fabric) (150-200 tonne/yr.)

Every 3 years - 5 tonne dye and 10 tonne stabilizing chemical (sodium hydrosulfite)

Products (tonne/yr.): dyed and printed greige goods (1 tonne/day).

Water Source	Average Consumption
Municipal (Zarqa)	0.6 m^3/day
Private Well	9.0 m^3/day

Industrial Processes	Water Use	Wastewater Flow
Waste dye sol'n.	7.0 m^3/day	7.0 m^3/day
Silk screen rinse	2.0 m^3/day	2.0 m^3/day
floor wash	m^3/day	m^3/day
	m^3/day	m^3/day

Wastewater Flow	Process	Cooling	Sanitary	Storm	Total
Ave. (m^3/day)	9.00		0.6		9.6
Max. (m^3/day)					

Wastewater Treatment /Disposal: Sanitary wastewater to cesspool. Process wastewater to Wadi Zarqa.

Comments: Temporarily shutdown while locating new markets.

TABLE I-A.1.14

SUMMARY OF INDUSTRIAL WASTE SURVEY

Industry: Jordan Tanning Co. Ltd. Location: Awjan Esh Sharqi

Principal Activities: leather tanning and finishing

No. Employees: 150-160 Operation: 8 Hr./day 6 days/wk

Raw Materials (tonne/yr.): Pig, sheep, and cattle hides (250 skin/day.) sodium sulfide (93.6 Kg/yr.) NaCl(218.4Kg/yr.), lime (156 Kg/yr.), chromium Sulfate 156 Kg/yr.)

Products (tonne/yr.):

Leather (10,000 ft^2/day)

Water Source	Average Consumption
Municipal ( )	- m^3/day
Private Well	650 m^3/day

Industrial Processes	Water Use	Wastewater Flow
Soaking	m^3/day	m^3/day
Liming	650 m^3/day	647 m^3/day
De-liming	m^3/day	m^3/day
Pickling	m^3/day	m^3/day
*		

Wastewater Flow	Process	Cooling	Sanitary	Storm	Total
Ave. (m^3/day)	647.0		3		650
Max. (m^3/day)					

Wastewater Treatment /Disposal: Process wastewater to ponds.

Sanitary wastewater to cesspool.

Comments: (* indust. process cont.)

Tannage
Dying
Fat liquor
Rinsing

Cont. ../..2

138

Cont'd. TABLE I-A.1.14

Raw Materials. (Cont'd)

Sulfuric acid	(156 Kg./yr.)
Formic acid	(1.6 Kg./yr.)
Sodium bicarbonate	(1.6 Kg./yr.)
Sodium carbonate	(15.6Kg./yr.)
Ammonium sulfate	(15.6Kg./yr.)
Fat & Oil	(37.4Kg./yr.)

TABLE I-A.1.15

SUMMARY OF INDUSTRIAL WASTE SURVEY

Factories

Industry: Jordan Paper & Cardboard Location: Awjan Esh Sharqi

Principal Activities: Paperboard & corrugated box manufacture

No. Employees: 240 Operation: Paper Mill 16 hrs. Box Mill 14 Hr./day 6 days/wk

Raw Materials (tonne/yr.): sorted scrap (6863 tonne/yr.) Kraft liner rolls (4000 tonne/yr.), liquid NaOH (112 tonne/yr), starch, aluminum Turko Scale Avert (R), imported crude pulp (100 tonne/yr) resin *

Products (tonne/yr.): floating medium paper rolls and chip board (5763 tonne/yr.), corrugated cardboard boxes

Water Source	Average Consumption
Municipal ( )	- m^3/day
Private Well	2130 m^3/day

Industrial Processes	Water Use	Wastewater Flow
Hydro-pulping	m^3/day	m^3/day
Cleaning straw pulp.	1948 m^3/day	1930 m^3/day
Boiler water make-up	177 m^3/day	2 m^3/day
	m^3/day	m^3/day

Wastewater Flow	Process	Cooling	Sanitary	Storm	Total
Ave. (m^3/day)	1932		5		1937
Max. (m^3/day)					

Wastewater Treatment /Disposal: Process wastewater to 3 seepage / evaporation ponds in series, no overflow, no recycle. Periodically drain ponds to Wadi Hajar in spring for cleaning w/dozer.

Comments: Use ponds for fire protection.

* Sizing (3.5 tonne/yr.) sulfate (25 tonne/yr.) straw (490 tonne/yr.), sodium silicate.

TABLE I-A.1.16

SUMMARY OF INDUSTRIAL WASTE SURVEY

Industry Co. Ltd.

Industry: Jordan Iron & Steel Location: Awjan Esh-Sharqi

Principal Activities: Melting plant and hot rolling mill

No. Employees: 265 Operation: 24 Hr./day 6 days/wk

Raw Materials (tonne/yr.): Steel billets (67,325 tonne/yr.) (1979) scrap iron (80-100 tonne/day), ferromanganese (2 tonne/wk.), silicon manganese (3 tonne/wk.), coke (1 tonne/wk), ferrosilicon (1 tonne/wk) $CaCo_3$ (12 tonne/wk.)

Products (tonne/yr.): Steel reinforcing bars (50,000-60,000 tonne/yr. billet steel (70 tonne/day)

Water Source	Average Consumption
Municipal (Zarqa)	1249 m^3/day
Private Well	108 m^3/day

Industrial Processes	Water Use	Wastewater Flow
Rolling mill contact cooling	1250 m^3/day	1250 m^3/day
Compressor cooling	Minor m^3/day	Minor m^3/day
Continuous cast cooling system blow-down	Minor m^3/day	Minor m^3/day
	m^3/day	m^3/day

Wastewater Flow	Process	Cooling	Sanitary	Storm	Total
Ave. (m^3/day)	2.0	1250.0	5		1257.0
Max. (m^3/day)					

Wastewater Treatment /Disposal: Sanitary wastewater to cesspool. Process discharged to Zarqa River.

Comments: New factory will start up in a year (1 Km from existing plant) using billet steel produced in melting plant to make "U" and "T" angles and flat bars.

TABLE I-A.1.17

SUMMARY OF INDUSTRIAL WASTE SURVEY

Industry: Jordan Ceramic Industries (Ceramco) Location: Awjan Esh Sharqi

Principal Activities: Ceramic tile and sanitary ware manuf.

No. Employees: 240 Operation: 8 Hr./day 6 days/wk

Raw Materials (tonne/yr.): Clay (7000 tonne/yr.)
glazing stains (2-3 tonne/yr.), feldspar (500 tonne/yr.)
sand (250 tonne/yr.)

Products (tonne/yr.): Ceramic tiles (4000 ton/yr.)
sanitary ceramic ware (2000 ton/yr.)

Water Source	Average Consumption
Municipal (Zarqa)	- m^3/day
Private Well	80 m^3/day

Industrial Processes	Water Use	Wastewater Flow
Mix clayslurry	50 m^3/day	- m^3/day
Wet grinding + misc.	7 m^3/day	7 m^3/day
Washing	20 m^3/day	20 m^3/day
Cooling water	20* m^3/day	* m^3/day

Wastewater Flow	Process	Cooling	Sanitary	Storm	Total
Ave. (m^3/day)	27.0		3		30
Max. (m^3/day)					

Wastewater Treatment /Disposal: Sanitary wastewater to cesspool.
Process wastewater to small concrete settling tanks w/some reuse as cooling water.

Comments: Investigating methods of reclaiming clay solids.

* Portion recirculated from settling basin dock to process.

TABLE I-A.1.18

SUMMARY OF INDUSTRIAL WASTE SURVEY

Industry: Jordan Industries & Match Co. (JIMCO) Location: Awjan Esh Sharqi

Principal Activities: Wooden safety match manufacture

No. Employees: 50 Operation: 8 Hr./day 6 days/wk

Raw Materials (tonne/yr.): Potassium chloride (14 tonne/yr.) phosphorus (7.5 tonne/yr) sulfur (2 tonne/yr) MnO_2 (1.25 tonne/yr.) Fe_2O_3 (12.0 tonne/yr) animal glue (4.5 tonne/yr.)

Products (tonne/yr.): Wooden Safety matches (50,000 Cartons/yr.)

Water Source	Average Consumption
Municipal ( )	- m^3/day
Private Well	8 m^3/day

Industrial Processes	Water Use	Wastewater Flow
Products solution make-up	1 m^3/day	0 m^3/day
Tank, floor & machine clean	6 m^3/day	6 m^3/day
	m^3/day	m^3/day
	m^3/day	m^3/day

Wastewater Flow	Process	Cooling	Sanitary	Storm	Total
Ave. (m^3/day)	6		1		7
Max. (m^3/day)					

Wastewater Treatment /Disposal: Cesspool for combined process and sanitary wastewaters.

Comments:

TABLE I-A.1.19

SUMMARY OF INDUSTRIAL WASTE SURVEY

Co.

Industry: Jordan Distilled Chemical Location: Awjan Esh Sharqi

Principal Activities: Chlor-alkali manufature (Mercury Cell process)

No. Employees: 60 Operation: 24 Hr./day 7 days/wk

Raw Materials (tonne/yr.): NaCl, H_2SO_4

Mercury (1 tonne/yr), barium chloride, soda ash

Products (tonne/yr.): Caustic soda (45% grade) (2400 tonne/yr.), sodium hypochlorite, chlorine gas (800 tonne/yr), HCl.

Water Source	Average Consumption
Municipal (Zarqa)	0.2 m^3/day
Private Well	80.0 m^3/day

Industrial Processes	Water Use		Wastewater Flow	
Cooling (recirc.)	unk.	m^3/day	0	m^3/day
Process make-up (consumed)	40	m^3/day	0	m^3/day
Mercury cell wastewater	-	m^3/day	33.3	m^3/day
Brine purification mud	-	m^3/day	40	m^3/~~day~~ wk.

Wastewater Flow	Process	Cooling	Sanitary	Storm	Total
Ave. (m^3/day)	40.0	-	1.2		41.2
Max. (m^3/day)					

Wastewater Treatment /Disposal: Cesspool for sanitary wastewater. Mercury cell wastewater continuous flow to river. Brine purification muds to concrete settle tank w/brine supernatant recycle to process. Underflow pumped to river once per week.

Comments: Presently operate 10 mercury cells. Plan to have 12 soon.

TABLE I-A.1.20

SUMMARY OF INDUSTRIAL WASTE SURVEY

Industry: Jordan Army Blanket Location: Awjan Esh-Sharqi

Principal Activities: Wool blanket & tent fabrication

No. Employees: 200 Operation: 8 Hr./day 6 days/wk

Raw Materials (tonne/yr.): Greige (bolt fabric) for tent, dyed yarn (for blankets), ammonia (dye stabilation), soda ash (8Kg/day), soap (16 Kg/day)

Products (tonne/yr.): 60,000 - 70,000 blanket/yr.) 2310 m^2/yr (app. 1500 Kg/yr). Army tents.

Water Source	Average Consumption
Municipal (Zarqa)	0.2 m^3/day
Private Well	150 m^3/day

Industrial Processes	Water Use	Wastewater Flow
Fabric scour	146 m^3/day	146 m^3/day
	m^3/day	m^3/day
	m^3/day	m^3/day
	m^3/day	m^3/day

Wastewater Flow	Process	Cooling	Sanitary	Storm	Total
Ave. (m^3/day)	146		4.0		150
Max. (m^3/day)					

Wastewater Treatment /Disposal: Cesspool for Sanitary waste, process wastewater pumped to 12 concrete basing which seeps to Wadi Al Ushsh.

Comments: Plan to double production and water usage within next two years by working 2 shifts/day.

TABLE I-A.1.21

SUMMARY OF INDUSTRIAL WASTE SURVEY

Industry: Jordan Electric Power Co. Abdali Power Station Location: Awjan Esh Sharqi

Principal Activities: Warehouse

No. Employees: 35 Operation: 24 Hr./day 7 days/wk

Raw Materials (tonne/yr.):

Products (tonne/yr.): None

Water Source	Average Consumption
Municipal (Zarqa)	1.0 m^3/day
Private Well	m^3/day

Industrial Processes	Water Use	Wastewater Flow
None	m^3/day	m^3/day
	m^3/day	m^3/day
	m^3/day	m^3/day
	m^3/day	m^3/day

Wastewater Flow	Process	Cooling	Sanitary	Storm	Total
Ave. (m^3/day)			1.0		1.0
Max. (m^3/day)					

Wastewater Treatment /Disposal: Sanitary wastewater to cesspool.

Comments: Facility used to be an emergency diesel driven generator station but has been permanently closed-down. Large amount of oil visible in abandoned drainage ditch.

146

TABLE I-A.1.22

SUMMARY OF INDUSTRIAL WASTE SURVEY

Industry: Arab Thinner Factory Location: Awjan Esh Sharqi

Principal Activities: Paint thinner manufacture

No. Employees: 4 Operation: 8 Hr./day 6 days/wk

Raw Materials (tonne/yr.): B. acetate, toluene
E. acetate, white spirit.
Acetone

Products (tonne/yr.): Thinner (300 tonne/year)
turpentine (200 tonne/yr.)

Water Source	Average Consumption
Municipal (Zarqa)	0.8 m^3/day
Private Well	- m^3/day

Industrial Processes	Water Use	Wastewater Flow
dry process	0 m^3/day	0 m^3/day
	m^3/day	m^3/day
	m^3/day	m^3/day
	m^3/day	m^3/day

Wastewater Flow	Process	Cooling	Sanitary	Storm	Total
Ave. (m^3/day)	-	-	0.8		0.8
Max. (m^3/day)					

Wastewater Treatment /Disposal: Sanitary waste to cesspool.
No process wastewater.

Comments: Water is used for drinking and irrigation.

TABLE I-A.1.23

SUMMARY OF INDUSTRIAL WASTE SURVEY

Industry: Jordan Polymer & Chemical Intermediates Co. (Jopolymer) Location: Awjan Esh Sharqi

Principal Activities: Polyvinyl acetate polymer & alkyd resin production

No. Employees: 20 Operation: 16 Hr./day 6 days/wk

Raw Materials (tonne/yr.): White mineral spirit (Solvent) vinyl acetate monomer, surfactants

Products (tonne/yr.): Polyvinyl acetate polymer (3500 tonne/yr.) (50% water), (solvent-based) alkyl resins (1500 tonne/yr.)

Water Source	Average Consumption
Municipal (Zarqa)	0.8 m^3/day
Private Well	32 m^3/day

Industrial Processes	Water Use	Wastewater Flow
	m^3/day	m^3/day
Boiler blowdown	Unknown m^3/day	Unknown m^3/day
Cooling (recirc.)	Unknown m^3/day	Unknown m^3/day
PVA tank clean	8 m^3/day	8 m^3/day

Wastewater Flow	Process	Cooling	Sanitary	Storm	Total
Ave. (m^3/day)	8.0		0.8		8.8
Max. (m^3/day)					

Wastewater Treatment /Disposal: Sanitary wastewater to cesspool, Process wastewater to drainage ditch.

Comments:

148

TABLE I-A.1.24

SUMMARY OF INDUSTRIAL WASTE SURVEY

Industry: Clenkers, Ltd. Location: Awjan Esh Sharqi

Principal Activities: Paint formulation

No. Employees: 12 Operation: 8 Hr./day 6 days/wk

Raw Materials (tonne/yr.):

Products (tonne/yr.): Latex paint (2 tonne/day)
emulsion paint (3 tonne/day)

Water Source	Average Consumption
Municipal (Zarqa)	3 m^3/day
Private Well	- m^3/day

Industrial Processes	Water Use	Wastewater Flow
Latex paint make-up	0.8 m^3/day	0 m^3/day
Latex tank clean	2.0 m^3/day	2.0 m^3/day
Oil-base paint tank lean	- m^3/day	4.0 m^3/day
	m^3/day	m^3/day

Wastewater Flow	Process	Cooling	Sanitary	Storm	Total
Ave. (m^3/day)	6		0.2		6.2
Max. (m^3/day)					

Wastewater Treatment /Disposal: Sanitary and process wastewater goes to different cesspools.

Comments: Double production this year by working two shifts.

TABLE I-A.1.25

SUMMARY OF INDUSTRIAL WASTE SURVEY

Industry: International Leather Products Location: Awjan Esh Sharqi

Principal Activities: Shoe Manufacture

No. Employees: 120 Operation: 8 Hr./day 6 days/wk

Raw Materials (tonne/yr.): Leather

Products (tonne/yr.): Shoes

Water Source	Average Consumption
Municipal (Zarqa)	2.4 m^3/day
Private Well	m^3/day

Industrial Processes	Water Use	Wastewater Flow
Dry process	0 m^3/day	0 m^3/day
	m^3/day	m^3/day
	m^3/day	m^3/day
	m^3/day	m^3/day

Wastewater Flow	Process	Cooling	Sanitary	Storm	Total
Ave. (m^3/day)			2.4		
Max. (m^3/day)					

Wastewater Treatment /Disposal: Sanitary wastewater to cesspool. No process wastewater discharged.

Comments:

1.D

TABLE I-A.1.26

SUMMARY OF INDUSTRIAL WASTE SURVEY

Industry: Jordan Fiberglass Co. Location: Awjan Esh Sharqi

Principal Activities: Fiberglass molded product manufacture

No. Employees: 13 Operation: 8 Hr./day 6 days/wk

Raw Materials (tonne/yr.):

Products (tonne/yr.):

Water Source	Average Consumption
Municipal (Zarqa)	0.3 m^3/day
Private Well	- m^3/day

Industrial Processes	Water Use	Wastewater Flow
Dry processes	0 m^3/day	0 m^3/day
	m^3/day	m^3/day
	m^3/day	m^3/day
	m^3/day	m^3/day

Wastewater Flow	Process	Cooling	Sanitary	Storm	Total
Ave. (m^3/day)	0		0.3		0.3
Max. (m^3/day)					

Wastewater Treatment /Disposal: Sanitary wastewater to cesspools. No process wastewater.

Comments:

TABLE I-A.1.27

SUMMARY OF INDUSTRIAL WASTE SURVEY

Industry: Jordan Tiles Co. Location: Awjan Esh Sharqi

Principal Activities: Flagstone and tile manufacture

No. Employees: 32 Operation: 8 Hr./day 6 days/wk

Raw Materials (tonne/yr.): Limestone gravel, cement, marble chips, limestone dust.

Products (tonne/yr.): terrazo (flagstone) tiles 600 m^2/day (3 cm. thick)

Water Source	Average Consumption
Municipal (Zarqa)	0.8 m^3/day
Private Well	130 m^3/day

Industrial Processes	Water Use	Wastewater Flow
Polishing	100 m^3/day	100 m^3/day
Production	30 m^3/day	- m^3/day
	m^3/day	m^3/day
	m^3/day	m^3/day

Wastewater Flow	Process	Cooling	Sanitary	Storm	Total
Ave. (m^3/day)	100		0.8		100.8
Max. (m^3/day)					

Wastewater Treatment /Disposal: Cesspool for sanitary. Process wastes to 2 earthen, settling basins which overflow to drainage culvert under Amman Zarqa Highway. Basins are dredged every 6 month.

Comments: Heavy solids load to settling basins.

2

TABLE I-A.1.28

SUMMARY OF INDUSTRIAL WASTE SURVEY

Industry: United Factories Location: Awjan Al Gharbi

Principal Activities: Alcohol & CO_2 gas production.

No. Employees: 7 Operation: 24* Hr./day 7* days/wk

Raw Materials (tonne/yr.): Molasses (8 tonne/day)

or dates (7 tonne/day)

or sugar (4 tonne/day)

Products (tonne/yr.): Alcohol (100 tonne/yr.) 1979

CO_2 gas (80 tonne/yr.) 1979

Water Source	Average Consumption
Municipal (Zarqa)	20 m^3/day
Private Well	20 m^3/day

Industrial Processes	Water Use	Wastewater Flow
Cooling	12 m^3/day	m^3/day
Fermentation water	28 m^3/day	36 m^3/day
Distillation slop	- m^3/day	m^3/day
	m^3/day	m^3/day

Wastewater Flow	Process	Cooling	Sanitary	Storm	Total
Ave. (m^3/day)	36		.14		36.14
Max. (m^3/day)					

Wastewater Treatment /Disposal: Sanitary Wastewater to cesspool and process wastewater to Wadi Zarqa.

Comments: No water treatment. Seasonal operation depending on market.

* When operating.

TABLE I-A.1.29

SUMMARY OF INDUSTRIAL WASTE SURVEY

Industry: Jordan Ceramic & Firebrick Co. Location: Awjan Al Gharbi

Principal Activities: Ceramic and brick manufacture

No. Employees: 36 Operation: 8 Hr./day 6 days/wk

Raw Materials (tonne/yr.): Clay, kaolinite, loam

Products (tonne/yr.): Earthenware pipes, redbricks roof tiles, firebricks, (16,120 tonne/yr.)

Water Source	Average Consumption
Municipal (Zarqa)	8.0 m^3/day
Private Well	m^3/day

Industrial Processes	Water Use	Wastewater Flow
Clay slurry water	7.3 m^3/day	0 m^3/day
	m^3/day	m^3/day
	m^3/day	m^3/day
	m^3/day	m^3/day

Wastewater Flow	Process	Cooling	Sanitary	Storm	Total
Ave. (m^3/day)	-		0.7		0.7
Max. (m^3/day)					

Wastewater Treatment /Disposal: Cesspool for sanitary wastewater. No process wastewater discharge.

Comments: This factory will be on its present location until July 1980 then will move to new factory on refinery road in NW Zarqa.

TABLE I-A.1.30

SUMMARY OF INDUSTRIAL WASTE SURVEY

Industry: Imperial Co. Ltd. Location: Awjan Al Gharbi

Principal Activities: Cotton & polyester underwear manufacture.

No. Employees: 60 Operation: 8 Hr./day 6 days/wk

Raw Materials (tonne/yr.): Yarn (500 Kg/day), wetting agent(500Kg/yr) caustic soda (5 tonne/yr), sodium carbonate (3 tonne/yr), sodium bicarbonate (3 tonne/yr) calcium hypochlorite (5 tonne/yr), leavening agent (500 kg/yr) dye (300-400 kg/yr) softener agent (1 tonne/yr) reactive dyes (200 Kg/yr.) acid dyes (200 Kg/yr.)

Products (tonne/yr.): 500 Kg/day underwear.

Water Source	Average Consumption
Municipal (Zarqa)	4.1 m^3/day
Private Well	32.7 m^3/day

Industrial Processes	Water Use	Wastewater Flow
Spent dye	2 m^3/day	2 m^3/day
Spent bleach	3 m^3/day	3 m^3/day
Dye rinse	12.5 m^3/day	12.5 m^3/day
Bleach rinse	12.5 m^3/day	12.5 m^3/day

Wastewater Flow	Process	Cooling	Sanitary	Storm	Total
Ave. (m^3/day)	30		1.2		
Max. (m^3/day)	30				

Wastewater Treatment /Disposal: Sanitary wastewater to cesspool. Process Wastewater to Wadi Zarqa.

Comments: Employment dropped in last 4 yrs. No production decrease.

TABLE I.A.1.31

SUMMARY OF INDUSTRIAL WASTE SURVEY

(Honninger)

Industry: Arab Breweries Co. Ltd. Location: Zarqa

Principal Activities: Beer Brewery

No. Employees: 50 Operation: 8 Hr./day 6 days/wk

Raw Materials (tonne/yr.): Water (3000 m^3/yr), hops concentrates (800 Kg/yr), malt (480-500 tonne/yr), yeast, trisodium phosphate H_2SO_4, HCl, disinfectant for tank cleaning, caustic (12-15 T/yr)

Products (tonne/yr.): Beer

Water Source	Average Consumption
Municipal (Zarqa)	141.0 m^3/day
Private Well	- m^3/day

Industrial Processes	Water Use	Wastewater Flow
Brewing	10 m^3/day	0 m^3/day
Bottle cleaning	76 m^3/day	76 m^3/day
Factory Cleaning	10 m^3/day	10 m^3/day
Compressor cooling	44 m^3/day	44 m^3/day

Wastewater Flow	Process	Cooling	Sanitary	Storm	Total
Ave. (m^3/day)	86	44	1.0		131
Max. (m^3/day)					

Wastewater Treatment /Disposal: Sanitary wastewater to cesspool, process wastewater to Wadi Zarqa w/o treatment.

Comments: Facility has production capacity of 50,000 hecto -l/yr. water treatment by ion-exchange.

TABLE I-A.1.32

SUMMARY OF INDUSTRIAL WASTE SURVEY

Industry: Jordan Brewery Co. Ltd. Location: Zarqa

Principal Activities: Beer Manufacture

No. Employees: 70 Operation: 24 Hr./day 6 days/wk

Raw Materials (tonne/yr.): Malts (800 tonne/yr.)
maze (250 tonne/yr.)

Products (tonne/yr.): Amstel Beer(50,000 hecto-l/yr.)

Water Source	Average Consumption
Municipal (Zarqa)	240 m^3/day
Private Well	____ m^3/day

Industrial Processes	Water Use	Wastewater Flow
Product consumption	16 m^3/day	0 m^3/day
Boiler make up	____ m^3/day	____ m^3/day
Bottle washing + Pasteurization	225.4 m^3/day	222.6 m^3/day
Tank & floor cleaning	____ m^3/day	____ m^3/day

Wastewater Flow	Process	Cooling	Sanitary	Storm	Total
Ave. (m^3/day)	222.6	____	1.4	____	224
Max. (m^3/day)	____	____	____	____	____

Wastewater Treatment /Disposal: 4 m^3/yr of fermentation waste (liquid yeast, 40-45% solids) is wasted to Wadi Zarqa. Sanitary wastewater to 3 cesspools Process WW to Wadi Zarqa W/O treatment . New water treatment process (reverse osmosis) is on line. Compressor cooling water is not recirculated.

Comments: Could run 100% on own wells but quality is not good as municipal water. Plan to expand production by 10%/year.

TABLE I-A.1.33

SUMMARY OF INDUSTRIAL WASTE SURVEY

Industry: Eagle Distillery Location: Zarqa

Principal Activities: Alcoholic beverage, perfume, & cosmetic manuf

No. Employees: 80 Operation: 8 Hr./day 6 days/wk

Raw Materials (tonne/yr.): Dates, grapes, raisins, sugar, nis seeds (40 - 50 tonne/yr.)

Products (tonne/yr.): Perfumes, alcoholic beverages. (Arak, brandy, bourbon, wine, champagne), CO_2 carbonic gas

Water Source	Average Consumption
Municipal ( )	70.5 m^3/day
Private Well	141.0 m^3/day

Industrial Processes	Water Use	Wastewater Flow
Dist. cooling water	160 m^3/day	53 m^3/day
Bottle wash & misc.	* m^3/day	107 m^3/day
Fermentation water	49.9 m^3/day	** m^3/day
Distillation slops	- m^3/day	47.9 m^3/day

Wastewater Flow	Process	Cooling	Sanitary	Storm	Total
Ave. (m^3/day)	154.9	53.0	1.6		209.5
Max. (m^3/day)					

Wastewater Treatment /Disposal: Sanitary wastewater to cesspools. Process wastewater to Wadi Zarqa via sewer through Amstel Brewery property. Date and Anis seeds screened out prior to discharge.

Comments: Amstel Brewery bottle wash wastewater discharged via same outfall. Fusel oil buried on-site.

* Portion of cooling water reused for bottle wash, boiler make-up, etc..

** Fermented "beer" to dillation.

TABLE I-A.1.34

SUMMARY OF INDUSTRIAL WASTE SURVEY

Industry: Zeidan Refrigeration Location: Awjan Al Gharbi

Principal Activities: Ice cream and confections manufacture

No. Employees: 20 Operation: 8 Hr./day 6 days/wk

Raw Materials (tonne/yr.): Caustic soda (tank clean)
sugar, dry milk.

Products (tonne/yr.): Ice Cream (4000 bars/hr.)
Confections

Water Source	Average Consumption
Municipal (Zarqa)	7.3 m^3/day
Private Well	- m^3/day

Industrial Processes	Water Use	Wastewater Flow
Floor and tank wash	6.3 m^3/day	6.3 m^3/day
Product make-up	0.6 m^3/day	0 m^3/day
	m^3/day	m^3/day
	m^3/day	m^3/day

Wastewater Flow	Process	Cooling	Sanitary	Storm	Total
Ave. (m^3/day)	6.3	-	0.4		6.7
Max. (m^3/day)	24				

Wastewater Treatment /Disposal: All wastewater to cesspools
compressor cooling water recirculated.

Comments: Seasonal operation.

TABLE I-A.1.35

SUMMARY OF INDUSTRIAL WASTE SURVEY

Industry: Big Zarqa Mill Co. Location: Zarqa

Principal Activities: Grain milling (dry)

No. Employees: 70 Operation: 24 Hr./day 6 days/wk

Raw Materials (tonne/yr.):

Grains

Products (tonne/yr.): Flour

Water Source	Average Consumption
Municipal (Zarqa)	6.8 m^3/day
Private Well	- m^3/day

Industrial Processes	Water Use	Wastewater Flow
Grain damping	5 m^3/day	0 m^3/day
	m^3/day	m^3/day
	m^3/day	m^3/day
	m^3/day	m^3/day

Wastewater Flow	Process	Cooling	Sanitary	Storm	Total
Ave. (m^3/day)	-		1.4		1.4
Max. (m^3/day)					

Wastewater Treatment /Disposal: Sanitary wastewater to cesspool.

Comments: Dry process

TABLE I-A.1.36

SUMMARY OF INDUSTRIAL WASTE SURVEY

Industry: Jordan Petroleum Refinery Location: Zarqa

Principal Activities: Petroleum refining, foundary

No. Employees: 2200 Operation: 24 Hr./day 7 days/wk

Raw Materials (tonne/yr.): Crude Oil (5000 tonne/day)

Products (tonne/yr.): Kerosene (142, 793), asphalt (87, 142) white spirits (580), LPG (46,586) fuel oil (329,724) jet fuel (181,000), diesel (423,182) gasoline (259,434)

Water Source	Average Consumption
Municipal ( )	_____ m^3/day
Private Well	_____ m^3/~~day~~ hr.

Industrial Processes	Water Use		Wastewater Flow	
Non-contact cooling (w/recirc.)	unk	m^3/day	380	m^3/day
Boiler blowdown	unk	m^3/day	24	m^3/day
Stripping steam columns	unk	m^3/day	120	m^3/day
Vacuum distillation unit	unk	m^3/day	55	m^3/day

(Cont'd) see Page 2

Wastewater Flow	Process	Cooling	Sanitary	Storm	Total
Ave. (m^3/day)	3840	380	100		4320
Max. (m^3/day)					6912

Wastewater Treatment /Disposal: Sanitary wastewater (incl. 60 residences, offices and canteens to package extended aeration treatment plant w/chlorination. Current process WW Treatment - All oil-contaminated wastewater to API separator for oil and grease removal. Effluent to 7 or 8 ponds in Wadi Sa'da. Pump from last ~~commerce~~ pond to 1 MG concrete lined lagoon with spray aeration for reuse in process. Some over flow in spring. Spent caustic (sour water) from hydrocarbon treatment is burned on ground. IX regeneration WW and cooling tower blowdown used for on-site irrigation future process WW Treatment - All process wastewater to lined mechanically aerated stabilization pond. Stripping steam WW to

Cont. ../.. 2

Cont'd. TABLE I-A.1.36

Industrial Processes (Cont'd)	Water Use	Wastewater Flow
Asphalt unit (contact cooling)	unk.* m^3/day	55 m^3/day
IX water treatment eluate	unk.* m^3/day	120-150 m3/day
Process clean and wash water Storm - drainage Sewerage (plant)	unk.* m^3/day	30- 50 m^3/day

Wastewater Treatment/Disposal (Cont'd)

treatment unit for phenol and sulfide removal prior to stabilization pond. Spent caustic neutralized w/fluid catalytic crack flue gases (CO_2 & CO) w/effluent to lined evaporation pond. Water treatment (IX) regeneration wastes may go to stabilization pond, evaporation pond, or new evaporator. The WW treatment system is planned to be completed by 1981.

Comments: Refinery currently under construction to double capacity within the next ten years. Water use will increase with production.

All water is from 7 wells, 3 of which are now operating.

* unk. - unknown

162

APPENDIX A.2

SUMMARY OF

INDUSTRIAL WASTEWATER CHARACTERISTICS

TABLE I-A.2.1 INDUSTRIAL WASTEW

INDUSTRY	SAMPLING DATE	CONCENTRATI					
		pH	TS	TSS	BOD_5	COD	Cd
YEAST INDUSTRIES CO. LTD.	17-3-79	7.8	4052	1923	4600	5480	-
	24-6-79	6.0	1846	428	1775	3720	0
	16-9-79	7.8	837	380	1690	3540	0.01
	Mean	7.2	2240	910	2690	4150	0.01
IMPERIAL UNDER-WEAR	9-6-79	4.0	2621	282	675	2353	-
	14-7-79	-	-	-	533	896	-
	15-7-79	3.9	2279	98	562	896	-
	Mean	3.95	2450	190	590	1380	-
JORDAN WORSTED MILLS	2-6-79	5.3	16449	15327	675	2353	-
	15-7-79	7.8	1178	31	562	752	-
	Mean	6.55	8810	7680	618	1550	-
CERAMCO	16-6-79	7.9	973	36	110	112	-
	29-7-79	7.9	995	372	152	140	-
	Mean	7.9	984	204	131	126	-
JORDAN ARMY BLANKET	21-7-79	8.9	19706	1712	833	2432	-

* Excluded from mean calculation.

Source: Amman Sewage Treatment Plant files. Analyses by the Royal Scien

:TEWATER CHARACTERISTICS

:ATION (mg/l)

	Cr	Pb	Hg	Cu	Zn	Fe	P_2O_5	NO_3	NH_3	Org. N
	-	-	-	-	-	-	-	-	-	-
	0	0	0	0.1	0.12	1.08	7	15	4.0	75.7
·1	0.01	0.01	0.01	0.01	0.01	0.2	0.1	20	0.32	24.1
·1	0.01	0.01	0.01	0.05	0.06	0.64	3.5	17.5	2.2	49.9
	-	-	-	0.01	0.04	-	-	20	2.0	23.4
	-	-	-	-	-	0.03	7.0	22	0.72	4.8
	-	-	-	-	-	.09	20.0	0*	0*	25.5
	-	-	-	0.01	0.04	0.06	13.5	21	1.4	17.9
	-	-	-	0.01	0.04	-	-	20	2.0	23.48
	-	-	-	-	-	0.03	trace	2	10	5.7
	-	-	-	0.01	0.04	0.03	trace	11	6.0	14.5
	-	-	-	-	0.16	-	-	10	10.7	13.8
	-	-	-	-	-	-	trace	60	0.2	3.4
	-	-	-	-	0.16	-	trace	35	0.45	8.6
	0.09	-	-	0.06	0.19	0.1	trace	2	240	50.4

cientific Society.

TABLE I-A.2.2 RESULTS OF INDUSTRIAL WASTEWATER SAMPLING PROGRAM*

INDUSTRY	SAMPLE DESCRIPTION	SAMPLE DATE	POLLUTANT CONCENTRATION (mg/l)													
			TSS	TS	BOD_5	COD	Oil & Grease	Total Kjeldahl-N	NH_3-N	Cd	Cu	Cr	Fe	Hg	Pb	Zn
I.C.A. Soap Factory	Barometric Condensate	4/28/80	50	893	38	50,176	-	-	-	-	-	-	-	-	-	-
	Sewer Lye	4/28/80	1,274	209,700	152	130,000	2,986	-	-	-	-	-	-	-	-	-
I.C.A. Paint Factory	Waste White Spirits	4/28/80	-	-	-	29,400	2,206	-	-	0.3	36	0.5	-	-	750	1,150
Jordan Overall, Ltd.	Rinse Tank Overflow	4/14/80	-	-	-	-	-	-	-	<0.01	-	0.01	44	-	-	0.46
	Boiler Blowdown	4/14/80	-	-	-	-	-	-	-	<0.01	-	0.02	82	-	-	0.66
	Paint Room Wastewater	4/14/80	-	-	-	-	-	-	-	<0.01	-	0.02	62	-	0.01	1.64
Jordan Worsted Mills	Fabric Scour	4/14/80	447	1,410	820	664	150	-	-	<0.01	0.05	-	-	-	-	0.26
Jordan Tanning Co., Ltd	Pickling/ Chrome Tannage Wastewater	4/17/80	4,858	75,620	-	230	122.5	708	551.4	-	-	5,600	-	-	-	-
	Unhair (Liming) Wastewater	4/17/80	3,732	10,671	-	298	-	94.5	-	-	-	125	-	-	-	-
	Misc.Beam-house Wastewater	4/17/80	2,078	6,948	-	1,536	187.5	341.6	-	-	-	5.4	-	-	-	-
	Pond No.1 (Tannage)	4/17/80	1,559	13,767	-	1,492	30.5	621	503.2	-	-	81.5	-	-	-	-
Jordan Iron & Steel Co.Ltd.	Rolling Mill Contact Cooling	4/12/80	109	806		216	40	-	-	-	-	-	1.15	-	-	-
Jordan Chemical Ind.	Mercury Cell Wastewater	4/28/80	-	-	-	-	-	-	-	-	-	-	-	15.25	-	-
	Brine Mud	5/5/80	-	-	-	-	-	-	-	-	-	-	-	25.0	-	-
Jordan Army Blanket Fact.	Fabric Scour	4/16/80	-	-	610	1,624	-	-	0.2	-	0.94	1.43	-	-	-	1.14
Clenkers	Tank Clean	4/12/80	-	3,577	-	2,182	-	-	-	0.01	-	<0.01	-	-	0.1	0.059
Imperial Underwear	Spent Dye	4/16/80	-	10,498	-	1,160	2,269	-	1.0	0.34	-	0.01	-	-	-	0.23
Jordan Breweries Co.,Ltd.	Bottle Wash	5/5/80	1,022	5,667	393	600	-	-	-	-	-	-	-	-	-	-
	Fermentation Waste	5/5/80	-	150,000	59,500	132,000	-	-	-	-	-	-	-	-	-	-
	Boiler/ Cooling	5/5/80	129	1,569	-	20	-	-	-	-	-	-	-	-	-	-
Eagle Distilleries	Combined Wastewater	5/5/80	-	-	2,057	-	-	--	-	-	-	-	-	-	-	-

* Samples collected by MPI. Analyses by Royal Scientific Society.

TABLE I-A.2.3 SUMMARY OF INDUSTRIAL FIELD INVESTIGATIONS

INDUSTRY	SAMPLE POINT	DATE	APPROX. FLOW (l/min.)	pH	SPECIFIC CONDUCTANCE (μmhos/cm)	NOTES
Hussein Industrial City	Outfall to Zarqa River	4/7/80	120-240*	7.2	1600	Appears turbid, white color, no foam or odor.
	Outfall to Zarqa River	4/9/80	120-240*	8.7	-	Appears same as on 4/7/80
	Soap Factory barometric condenser hot well	4/28/80	218+	7.0	-	Temp = 28 °C. Appears clear. No foam or odor.
	Soap Factory sewer dye	4/28/80	-	10.6	-	Turbid w/white color. Visible, long, stringy fibers.
Jordan Overall Co., Ltd.	Alkaline rinse o'flow	4/14/80	8.1**	6.3	-	Intermittent flow.
	Boiler-room outfall	4/14/80	16.6**	8.9	-	Continuous flow.
	Paintroom o'flow	4/14/80	-	-	-	White color, turbid. Intermittent, low flow.
Jordan Worsted Mills	Outfall Channel	4/14/80	720*	7.2	-	Semi-intermittent flow, Green color with large am't. visible fibers.
Jordan Iron & Steel	Rolling mill cooling water	4/12/80	1040*	-	-	Visible oil sheen. Earthen ditch stained black.
Jordan Distilled Chemical Industries	Spent brine sol'n purge	4/12/80	21**	11.1	-	Temp. = 40 °C. Appears clear.
Jordan Army Blanket Fact.	Influent channel to settle basins	4/16/80	1000*	9.5	7500	Intermittent flow. Turquois color w/ heavy fiber load.
Jordan Breweries Co., Ltd	Boiler water and cooling tower blowdown	5/5/80	-	7.8	-	Appears clear. Tepid.
	Fermentation (yeast) waste	5/5/80	400++	-	-	Batch dump. High solids content.
	Bottle wash wastewater	5/5/80	-	11.6	-	No odor, not many visible solids.
Eagle Distillery	Manhole on Amstel property				-	Temp.= 70°C. Dark brown color. Looks and smells like molasses.
Jordan Tanning Co. (Refer to Figure I-2.3 for sample locations)	Chrome tannage and pickling wastewater (Sample Pt. I).	4/17/80	20++	3.1	-	End of batch discharge. Hair deposits around outfall.
	Liming wastewater (Sample Pt II).	4/17/80	500-1700++	9.6	-	Batch dump. Heavy solids load. White lime color.
	Vegetable tannage and soaking wastewater	4/17/80	-	11.6	-	
	Pond No.1	4/17/80	-	5.6	>19,500	Dark blue-green color
	Pond No.2	4/17/80	-	7.1	>20,000	Dark blue-green color
	Pond No.3	4/17/80	-	5.7	>20,000	Dark blue-green color
	Pond No.4	4/17/80	-	8.4	20,000	Red color
	Pond No.5	4/17/80	570*	8.0	15,500	Red color. Overflows to Pond No.5.
	Pond No.6	4/17/80	-	8.3	15,500	Red color
	Pond No.8	4/17/80	-	7.9	14,000	Red color
	Pond No.9	4/17/80	-	8.1	9,000	Red color. No visible discharge

* Flow calculation from depth and velocity measurement (Q=AV)

** Flow measurement by bucket and stop-watch.

\+ Flow measurement by 90° V-notch weir

++ Visual flow estimate

TABLE I-A.2.4 CHARACTERIZATION OF JORDAN PAPER AND CARDBOARD CO. PROCESS WASTEWATERS*

SAMPLE LOCATION / POLLUTANT PARAMETER	WHITEWATER FROM PAPER MACHINE PAN	WASTEWATER FROM DAM	WELL NO.1 WATER	WELL NO.2 WATER
Conductivity (mmhos/cm)	1.423	1.255	0.925	0.917
TDS (mg/l)	911	803	592	587
Ca^{++} (meg/l)	4.91	5.27	4.10	4.14
Mg^{++} (meg/l)	2.59	1.93	2.23	2.22
Na^{+} (meg/l)	6.85	5.25	3.45	3.50
K^{+} (meg/l)	0.36	0.22	0.13	0.17
Cl^{-} (meg/l)	6.25	5.30	4.42	4.45
$SO_4^{=}$(meg/l)	0.45	0.20	0.72	0.74
$CO_3^{=}$ (meg/l)	0.00	0.00	0.00	0.00
HCO_3^{-} (meg/l)	6.84	6.54	4.14	4.24
Total cations (meg/l)	14.71	12.67	9.91	10.03
Na (%)	46.57	41.44	34.81	34.90
SAR**	3.54	2.77	1.94	1.96
pH	7.80	7.75	7.40	7.45
$NO_3^{=}$ (mg/l)	13.73	15.06	35.44	31.29
NH_4 (mg/l)	3.20	3.85	2.89	0.35
PO_4 (mg/l)	0.00	0.00	-	-
Irrigation Water Class***	C_3-S_1	C_3-S_1	C_3-S_1	C_3-S_1
Sample Date	10/28/79	10/28/79	11/8/79	11/21/79

* Analyses by Natural Resources Authority Water Laboratory

** Sodium Absorption Ratio

*** U.S. Dept. of Agriculture Classification.

TABLE I-A.2.5 CHARACTERIZATION OF JORDAN REFINERY PROCESS WASTEWATER *

Year	1970			1971
Sample Location Pollutant Parameters	API Separator Infl.	API Separator Effl.	Effl. Pond 8	API Separa Effl.
Alkalanity (as $CaCO_3$,ppm)	-	-	436	660
Chlorides (" " ")	-	-	125	154
Total Hard (" " ")	-	-	82	64
Ca Hard (" " ")	-	-	24	50
Mg Hard (" " ")	-	-	28	14
SO_4 (" " ")	-	-	-	80
SiO_2 (ppm)	-	-	-	-
PO_4 (")	-	-	0.0	-
Iron (")	-	-	0.0	-
Phenols (")	-	-	1-19	8.0
PH	7.2-11.5	7.6-11.2	9.3-9.7	10.8
Conductivity (umhos/cm)	-	-	960	1060
C.O.D (ppm)	-	-	127-728	400
B.O.D (")	-	-	18	-
Oil Content (")	-	-	6 -46	-
H_2S (")	-	-	0.0	NIL
Sulfides (")	-	-	6.0	64
Turbidity (Turbidity Units)	-	-	28 -235	30
Total (as $CaCO_3$, ppm)	-	-	-	-
Total Cations (as $CaCO_3$, ppm)	-	-	-	-
$Na^+ + K^+$ (" " ppm)	-	-	-	-
Total Solides (ppm)	-	-	702-889	-
Sulfides (ppm)	-	-	-	-

*Source: Jordan Refinery files.

	1972	1973		1974		1975	
r	Effl. Pond 8	Effl. Pond 8	API Separator Effl.	Effl. Pond 8	Effl. Pond 5	Effl. Pond 8	Effl. Pond 5
	140-600	356	-	176-442	94	162-330	182-232
	30 -400	28	-	109.6-179	123	210-381	140-190
	50 -172	70	-	106	96	112-114	112-150
	26 - 72	-	-	54-62	56	72-102	104-180
	24 -100	-	-	40-62	40	12- 40	8-160
	60 -148	64	-	68	52	36- 54	48-140
	0.4-7.5	-	3.-15	-	-	14.8	122
	0.2-0.6	-	-	-	-	-	-
	0.0-0.16	-	-	-	-	-	-
	0.4- 58	4.7	-	4.0	0.0	0.0	0.0
	8 - 12	10.2	11.2	8.5-11.5	7.2	6.2-10.5	8.2-9.4
	20-1900	800	1100-1587	849-1150	612	802-1244	728-135
	140-728	432	-	-	-	-	-
	-	-	-	-	-	-	-
	-	-	-	-	-	-	-
	NIL	NIL	-	-	-	0.0	0.0
	0.0- 56	3.2	-	0.0	0.0	0.0	0.0
	30 -210	32	-	4.5	0.0	-	-
	-	-	-	-	-	426-746	420-960
	-	-	-	-	-	426-746	492-960
	-	378	-	-	-	312-635	308-810
	-	-	-	-	-	-	-
	0.0-132	-	-	-	-	-	-

170

1975		1976	1977	1978	
Effl. Pond 8	Effl. Pond 5	API Separator Effl.	API Separator Effl.	Effl. Pond 5	Effl. Pond 8
62-330	182-232	150	570	168	148
10-381	140-190	160	252	210	216
12-114	112-150	128	168	180	180
72-102	104-180	58	86	110	104
12- 40	8-160	70	82	70	76
36- 54	48-140	66	64	76	84
4.8	122	27	-	454	448
-	-	1.0	-	-	-
-	-	-	-	-	-
0.0	0.0	5.0	31	3.4	25.6
.2-10.5	8.2-9.4	7.9	9.4	8.4	7.4
)2-1244	728-1380	816	1380	1095	1065
-	-	-	-	-	-
-	-	-	-	-	-
-	-	-	-	-	-
0.0	0.0	-	0.13	-	-
0.0	0.0	-	-	-	-
-	-	-	-	-	-
26-746	420-960	376	-	454	448
26-746	492-960	376	-	454	448
12-635	308-810	248	-	274	268
-	-	-	843	-	-
-	-	-	-	-	-

APPENDIX A.3

SAMPLE STANDARDS FOR DISCHARGE INTO THE SEWERS OF ZARQA-RUSEIFA JOINT SEWERAGE AGENCY

SAMPLE STANDARDS FOR DISCHARGE INTO THE SEWERS OF ZARQA-RUSEIFA JOINT SEWERAGE AGENCY

Sec. 1 INDUSTRIAL WASTEWATER DISCHARGES PROHIBITED

No industrial wastewaters shall be discharged to a trunk sewer or to a sewer discharging directly or indirectly to a trunk sewer until a Permit for Industrial Wastewater Discharge has been obtained from the Agency.

Sec. 2 DISCHARGE OF WATERS NOT CONTAINING SEWAGE

The discharge of waters not containing sewage is prohibited. Except with the approval of the Agency, no stormwater connection from any building or yard, nor any drain from any catch basin, wadi, pond, or swimming pool, nor any outlet for surface water, stormwater or groundwater of any kind shall be connected to the trunk sewer system or any public sewer tributary thereto or to any private sewer connected to any such public sewer. No stormwater shall be allowed to enter any soil, waste or vent pipe from any building. No downspout, roof leader, gutter, other pipe, or drain such as channels which may at any time carry stormwater surface drainage derived from hydraulic pressure or from well points shall be connected with any sanitary sewer. Except with the approval of the Agency, no cooling water shall be discharged to the sewer.

Sec. 3 DISCHARGE TO A NATURAL OUTLET

It is prohibited to discharge to any stormwater or natural outlet within the area served by the Agency any sewage or other polluted waters, except where suitable

treatment has been provided in accordance with the provisions of the Agency and for which a permit has been duly issued and is currently valid for such discharge.

Sec. 4 COOLING WATER DISCHARGE

The discharge of industrial cooling water or unpolluted process waters to a stormsewer or a natural outlet without the approval of the Agency is prohibited.

Sec. 5 PROHIBITED DISCHARGES

No person shall discharge or cause to be discharged any of the following described waters or wastes to any public sewers or natural outlets:

(a) Any gasoline, benzene, naphta, fuel oil, or other flammable or explosive liquid, solid or gas.

(b) Any waters used for the purpose of diluting wastes which would exceed applicable maximum concentration limitations.

(c) Any water or wastes having a pH lower than 5.5, or having a pH higher than 9.5, or having any other corrosive property capable of causing damage or hazard to structures, equipment of the sewer system or personnel employed in its operation.

(d) Solid or viscous subtances in quantities or of such size as to be capable of causing obstruction to the flow in sewers or otherwise interfering with the proper operation of the sewage works such as, but not limited to, ashes, cinders, sand, mud, straw, shavings, metal, glass, rags, feathers, tar, plastics, wood, garbage, whole blood, pauch manure, hair and fleshings, entrails, paper dishes, cups and milk containers.

(e) Any waters or wastes containing toxic or poisonous solids, liquids, or gases in sufficient concentration which, in the sole opinion of the Agency, either singly or by interaction with other wastes, will injure or interfere with any sewage treatment process, or will constitute a hazard to humans or animals, or will create a public nuisance, or will create any hazards in the receiving waters of a sewage treatment plant effluent.

(f) Wastes, other than domestic sewage, from any hospital, mercantile, manufacturing or industrial establishment, or any steam, hot gases or vapors, grease, fats, oils, acids, carbon, iron or mineral wastes, or any other wastes which would tend to obstruct the public sewer, to be injurious to the public health, create odors, be detrimental to the sewerage works, or which would interfere with the proper repair or maintenance of the sewerage system, the operation and maintenance of the disposal works or the proper treatment of domestic sewage, or which results after treatment in an effluent which is a menance to life or health.

Sec. 6 LIMITED DISCHARGES

No person shall discharge or cause to be discharged into the public sewerage system or into a natural outlet, the following described substances, materials, waters, or wastes, if it appears likely in the sole opinion of the Agency, that such wastes are likely to harm the public sewers, sewage treatment process, or equipment, have an adverse effect on the receiving stream, or is likely to otherwise endanger life, health or property, or constitute a nuisance. In forming its opinion as to the acceptability of these wastes, the Agency will give consideration to such factors as the quantities of subject wastes in relation to

flows and velocities in the sewers, materials of which the sewer is constructed, nature of the sewage treatment process, capacity of the sewage treatment plant, degree of treatability of wastes in the sewage treatment plant and other factors which are pertinent in the opinion of the Agency. The substances prohibited are:

(a) Any liquid or vapor having a temperature higher than 65°C. If, in the sole opinion of the Agency, lower temperatures of such wastes could harm either the sewers, sewage treatment process, or equipment, have an adverse effect on the receiving stream, or could otherwise endanger life, health or property, or constitute a nuisance, the Agency may prohibit such discharges.

(b) Any water or waste containing fats, wax, grease, or oils, whether emulsified or not, in excess of 100 mg/l or containing substances which may solidify or become viscous at temperatures between 0°C and 65°C.

(c) Any waters or wastes containing heavy metals and similar objectionable or toxic substances to such degree that any such material received in the composite sewage at the point of discharge to the municipal sewerage system exceeds the limits established below:

Chromium (Total)	2.0 mg/l
Chromium (Trivalent)	1.0 mg/l
Chromium (Hexavalent)	0.1 mg/l
Copper	0.4 mg/l
Zinc	1.6 mg/l
Nickel	1.0 mg/l
Cadmium	0.2 mg/l
Arsenic	0.1 mg/l
Barium	1.0 mg/l
Lead	0.1 mg/l
Manganese	1.0 mg/l
Silver	.05 mg/l
Boron	1.0 mg/l
Mercury	.01 mg/l
Selenium	.05 mg/l

176

or any element which in the sole opinion of the Agency, could damage collection facilities or be detrimental to the treatment processes. The limits set forth above may be amended from time to time as such amendment is deemed necessary by the Agency to protect the facilities or life or health.

(d) Any water or wastes that contain phenolics in excess of 0.1 parts per million by weight, or other taste or odor producing substances in such concentrations exceeding limits established by the Agency.

(e) Any radioactive wastes or isotopes of such half-life or concentrations as may exceed limits established by the Agency.

(f) Quantities of flow, concentrations, or both, which constitute a "slug".

(g) Materials which cause:

1. unusual concentrations of inert suspended solids which are defined as concentrations exceeding 250 mg/l or dissolved solids such as, but not limited to, sodium chloride in concentrations greater than 10,000 mg/l and sodium sulfate in concentrations greater than 500 mg/l

2. Unusual concentrations of BOD which are defined as concentrations exceeding 1000 mg/l, chlorine requirements exceeding 9.0 mg/l or phosphorous concentrations exceeding 5.0 mg/l.

3. Discolorations, such as, but not limited to, dye waters and vegetable tanning solution.

4. In cases where the effluent characteristics of an industrial or commercial discharge exceeds the maximum permissible limits stated above, the acceptability of such waste will be left to the engineering judgement of the Agency. If in the sole judgement of the Agency, the admission of such wastes will not overload the Agency's facilities, a permit to discharge said waste may be granted. However, the Agency may require the payment of an industrial waste surcharge for both capital and operating and maintenance expenses to cover

77

the cost of treatment for the abnormal strength sewage.

(h) Waters for wastes containing substances which are not amenable to treatment or reduction by the sewage treatment processes employed.

(i) Any waters or wastes which by interaction with other waters or wastes in the public sewerage system release odors, form suspended solids which interfere with the collection system or create a condition deleterious to the sewerage works.

(j) Any waste with a concentration of cyanide in excess of 0.8 mg/l.

(k) Any waste containing any substance that may precipitate, solidify, or become viscous at temperatures between $0^{\circ}C$ and $40^{\circ}C$.

Sec. 7 IMPROPER USE OF SEWERS

The Agency hereby reserves the right to inspect any existing building service sewer and drain, lateral or collecting sewers that discharge wastewater directly or indirectly to the Agency's facilities. If it is found that such laterals or collecting sewers are used or maintained in such a way as to cause discharge of septic wastewater or groundwater or debris which exceeds the design criteria of said sewer or any other substance deemed objectionable by the Agency, the Agency will give notice of the unsatisfactory condition to the discharger and shall direct that the condition be corrected.

In cases of continued non-compliance with the Agency's directive, the Agency may disconnect the said sewer from the Agency's sewerage system without any liability for prosecution or damages.

Sec. 8 EXCESSIVE SEWER MAINTENANCE EXPENSE

No person shall discharge or cause to be discharged to any sewer, either directly or indirectly, any waste that creates a stoppage, plugging, breakage, any reduction in sewer capacity or any other damage to sewers or sewerage facilities

or Agency. Any additional sewer or sewerage maintenance expenses caused by such a discharge, or any other expenses attributable thereto will be charged to the discharger by the Agency shall constitue a violation of these standards.