PN-AAT-606

WATER AND SANITATION FOR HEALTH PROJECT

WASH

COORDINATION AND INFORMATION CENTER

Operated by CDM FIVE for the U.S. Agency for International Development

1611 N. Kent Street, Room 1002
Arlington, Virginia 22209 USA

Telephone: (703) 243-8200
Telex No. WUI 64552
Cable Address WASHAID

SUMMARY OF PROCEEDINGS OF WORKSHOP ON EXCRETA DISPOSAL IN UNSEWERED AREAS

WORKING PAPER NO. 10

DECEMBER 1981

Prepared for:
Office of Health
Bureau for Science and Technology
U.S. Agency for International Development
Order of Technical Direction No. 51

CDM FIVE is operated by Camp Dresser and McKee Incorporated; Principal Collaborators: Center for Educational Development in Health, Boston University; International Science and Technology Institute; Research Triangle Institute; University of North Carolina at Chapel Hill

WORKING PAPER NO. 10

SUMMARY OF PROCEEDINGS OF WORKSHOP ON EXCRETA DISPOSAL IN UNSEWERED AREAS

Prepared for the Office of Health
Bureau of Science and Technology
Agency for International Development
under Order of Technical Direction No. 51

Prepared by:

Clarence E. Calbert
Vanessa Carpenter

December 1981

Contract No. AID/DSPE-C-0080
Project No. 931-1176

TABLE OF CONTENTS

Chapter		Page
	EXECUTIVE SUMMARY	ii
1.	INTRODUCTION	1
2.	STRUCTURE OF THE WORKSHOP	2
3.	SUMMARY OF SPEAKERS' PRESENTATIONS	4
	3.1 Overview of Excreta Disposal Systems	4
	3.2 Composting Toilets	5
	3.3 Pit and Vault Privy	5
	3.4 Latrine Emptying	6
4.	SUMMARY OF WORKING GROUP REPORTS	7
	4.1 Report of Group A	7
	4.2 Report of Group B	8
5.	EVALUATIONS	9
	APPENDICES	
	A. Order of Technical Direction	10
	B. Workshop Agenda	13
	C. Speakers	14
	D. Participants	15
	E. Cairo Case Study Data	16
	F. Speakers' Presentations	23

EXECUTIVE SUMMARY

Because of the urgent need for low cost, feasible and appropriate excreta disposal systems in the developing countries, especially in peri-urban areas, the Agency for International Development through the Water and Sanitation for Health (WASH) Project sponsored a one-day workshop which brought together overseas development professionals with experts in alternatives sanitation technologies as opposed to the expensive high technology systems of industrial countries.

The morning session consisted of formal presentations on composting toilets, pit and vault privies, and latrine emptying, and a case study drawn from a peri-urban region of Cairo. In the afternoon workshop participants were divided into two working groups and asked to analyze problems of excreta disposal based on the case study data and to develop specific alternative solutions drawing upon the technical presentations and workshop resource people.

The participants agreed that the workshop was a valuable source of information although perhaps it tried to cover too much ground. It was suggested, among other things, that in future such workshops might cover excreta disposal problems of rural areas, that the objectives for working groups be stated more specifically and that discussions include cost recovery and institutional constraints. It was also suggested that a model program description be included. Virtually all participants stated the need for more seminars in the United States and overseas. Suggestions for future topics included health, socio-cultural factors affecting water supply and sanitation, and appropriate technology.

Chapter 1

INTRODUCTION

The benefits to health and the convenience to consumers of waterborne sewerage systems have been well known to health workers for a long time. Because of cost, however, conventional waterborne systems offer little hope for improving waste or excreta disposal services in peri-urban or rural areas of developing countries. Attention, therefore, must be turned to alternate technologies which can meet public health standards but not require great sums of money or enormous quantities of water to transport human excreta.

The Agency for International Development (AID) has for many years provided technical assistance to developing countries in the area of excreta disposal in both sewered and non-sewered areas. Of particular interest at this time is the development and transfer of feasible and economical technological systems for human excreta disposal that could be utilized in non-sewered areas including both water carriage and non-water carriage toilets. Major considerations for such systems include social and cultural acceptance, practicability of design, ease of maintenance and low-cost construction.

There have been numerous technologies for disposal of excreta developed in the United States and in other countries. Some have worked and others have not. Many have been too costly to construct and maintain in developing countries. In some instances the designs have not met certain sanitation or safety criteria.

A workshop was sponsored by AID to determine the best and most economical systems or facilities for use in non-sewered areas in the urban periphery of developing countries. The workshop, the first of a series, was organized by the Water and Sanitation for Health (WASH) Project and held at the International Science and Technology Institute in Washington on September 10, 1981.

Chapter 2

STRUCTURE OF THE WORKSHOP

The Workshop was planned to bring together engineering, sanitation, and health workers with considerable experience in the field of excreta disposal with development professionals who are currently attempting to design and implement such programs in developing countries. The workshop was designed to give participants concrete and workable ideas for solving problems of excreta disposal in unsewered areas of these countries.

Twenty-five participants were selected from AID, the Pan American Health Organization (PAHO), the World Bank, the Peace Corps, and other relevant and interested agencies. The participants are responsible for planning, design, and implementation of programs and expressed a need for more specific and better information on new technologies for the provision of safe and adequate sanitation measures. A few experienced persons were invited as observers and also served as a valuable resource for workshop participants.

The presenters were individuals with knowledge and experience in the field of excreta disposal who had practiced their profession in many areas--at home as well as abroad. They were requested to develop papers, visual aids, models, graphs and other illustrations based on their experiences. Bonneau Dickson presented an overview of excreta disposal systems. Michael Skenfield spoke about composting toilets. Max Kroschel presented a paper on pit and vault privies, and David Dalmat spoke about latrine emptying.

Joseph Haratani, who had served as an AID advisor in Egypt, presented a case study from Cairo. It was felt that an actual case study would be better for discussion than highly theoretical concepts. The case study was taken from a typical area on the periphery of Cairo. Basic information included the demographic, physical, economic, social and cultural characteristics of the area. Maps, charts, slides, tables and other aids were used.

In the opening session the moderator explained the logistics and organization of the workshop. This was followed by the case study and the presentation of the technological papers. The morning session was devoted to these presentations with a question and answer period after each one.

In the afternoon the participants were divided into two working groups to address the excreta and wastewater disposal problems described in the Cairo case study. The two groups were instructed to use the demographic and environmental data provided earlier and supplemented with information from resource persons to analyze the problem and to develop specific

alternative solutions. Group A discussed problems of excreta disposal in houses with water suppies including house connections, kitchen sinks, flush toilets, etc. Group B considered problems of excreta disposal in homes where water was obtained from public hydrants, wells with handpumps, or other systems but which had no flush toilets, sinks or other plumbing facilities.

A leader or chairman was selected for each discussion group. The reporters were appointed by the group leader. The resource people were available to each group to offer advice and clarification on points or issues under discussion.

Following the working group sessions, all participants and observers were reassembled in the general conference room for a plenary session at which time the deliberations, conclusions, and recommendations of each working group were presented and discussed.

Chapter 3

SUMMARY OF SPEAKERS' PRESENTATIONS

3.1 Overview of Excreta Disposal Systems

Dickson presented an overview of the various classes of sanitary facilities. He indicated that of the two categories of waterborne sewers, he was extremely skeptical of the advisability of the small bore sewers. He did say that he had no personal experience with them, but theoretically he felt that they were a poor alternative because the assumption that they would not have to carry solids was unduly optimistic. The main drawback of small bore sewers is that if solids did get into the pipes the minimal cost savings in building them would be overridden by the cost of cleaning them.

One of the participants indicated that he had some experience with small bore sewers in relation to his work with the Indian Health Service. He also felt that they would be ill-advised. He said that if they are graded, non-pressure sewers, then many problems develop in getting them to drain properly. This is especially true when plastic pipe is used.

In relation to the economics of constructing sanitary facilities in developing countries, Dickson said that one problem he saw cropping up again and again was the belief of some contractors in developed countries that a typical engineered system could be built for substanitially less than it would cost in a developed country. He warned that in his experience this was just not true. He indicated that even though the labor is usually much less expensive it is often also much less efficient and, thus, the cost of construction in a developing country generally works out to be at least 90 percent of the cost of construction in a developed country.

He said that in most of the Middle Eastern countries the best solution for treatment is probably lagoons. Whether this holds true for Egypt or not he was not sure.

Dickson listed a number of constraints to the development of non-waterborne sanitation facilities. He felt the most important ones were appropriateness of the technology, availability of trained personnel, social and cultural acceptability, lack of central organizational authority, and funding.

Finally, Dickson said that he felt that one of the crucial ingredients of a successful program was involvement of the users in the development of the system.

3.2 Composting Toilets

Skenfield discussed use of a Clevus Multrum-type container developed in Sweden for use in establishing a composting toilet system in Cairo. He said that if a composting toilet should be the chosen alternative, he would advise against the use of small electrically heated composters. Even the largest Clevus Multrum, which is ten feet long and eight feet tall, was too small.

He indicated that such a container could be built from locally available materials. In this way the container and the system could be designed around local customs.

Skenfield stated that he believed the ideal system would be a combination of some sort of water seal or air seal at the toilet location to keep aerial vectors from coming up into the household. Secondly, he recommeded ensuring thorough aeration through a receptacle so that the system would have sufficient atmospheric oxygen. Thirdly, he stated that the container should have a sloping bottom to allow moisture to go off and away from the solids at a reasonable pace. The liquids should have an ultimate destination so that they can remain in a settling tank long enough for some decompostion to occur. Finally, Skenfield stated that there should be easy access to the composted material.

One of the problems identified with such a system is the space requirement for the container. Another was what to do with the urine. Skenfield suggested that it could be put in the cesspools that already exist in Cairo. The third major problem was the lack of appropriate kitchen wastes to use for the composting process. Skenfield stated that the actual conditions would have to be looked at and an alternative decided upon.

3.3 Pit and Vault Privy

Kroschel recommended use of a compost toilet system similar to the one developed in North Vietnam. The system requires the separation of feces from urine, and, even though not currently practiced in Egypt, Kroschel stated that the Egyptians could be taught the practice as the Vietnamese were.

Kroschel indicated that he envisioned a completely dry system with the urine going out into subsurface leach fields or soakaways if the desire is to dispose of it. However, he stated that the urine could be used by diluting it with water and channeling it into irrigation water for agriculture. The urine could also be used in large compost piles by mixing it with organic materials such as straw that do not have adaquate nitrogen.

One participant commented that individualized collecting units would be too expensive in high-rise buildings, yet it would be extremely difficult to maintain a completely dry system if there is only one building holding unit. The dry solids would not move through the necessary connecting pipes. He asked about the possibility of using small amounts of liquid to flush materials through a few feet of pipe.

It was indicated that the container could have a sloping bottom to drain the liquid away from the solid material. A fecal mass will build up into a steep peak and as soon as water hits it, rather than soaking into the mass, it will run off. Such a system includes a container further down the gravity line to collect the liquid.

It was stated by Kroschel that even though use of the finished composted product would not be extremely useful as a fertilizer in an urban area, the container acts as a storage vault and makes it easier to dig out and transport the wastes.

3.4 Latrine Emptying

Mechanical procedures for emptying latrines was the subject of Dalmat's presentation. The focus of his presentation was the vacuum truck. He stated that this was a clean, efficient, cost-effective method for emptying latrines. He said that his experience has shown that in pumping pit latrine wastes, a good, workable solids concentration is 20 percent. He also indicated, however, that in the Washington, D.C. metropolitan area he did run across some pits that had 44 percent solids which were effectively handled by a back flushing method.

Dalmat stated that if there is no need for the excreta, then a double vault or composting latrine on site would probably not be the best choice. In such a case, use of the vacuum truck to pump out wastes from a pit latrine would be a more feasible solution. In addition, no public health hazard would arise. He stated that the U.S. Army tested the exhaust emitted by the system and determined that if any virus or bacteria were involved, they would be of a sufficiently low level so as not to cause any public health risk. The odor is also minimal which is another positive factor for utilization of this system.

Chapter 4

SUMMARY OF WORKING GROUP REPORTS

4.1 Report of Group A

Group A considered four questions:

1. What are the problems?

   These were identified as:

   (a) high groundwater
   (b) impervious soils
   (c) high population
   (d) narrow streets
   (e) low family income
   (f) maintenance of anything mechanical
   (g) no central sewer authority
   (h) flat terrain

   One other constraint identified was that all of the apartments in the subject area already had a pour/flush type of system. It was felt that the method of waste disposal in the buildings was fairly well established. Therefore, it would be more advisable to stay with water carriage sewerage.

2. What do we want to achieve?

   The general concern is to provide a better and safer method of collecting and disposing of wastewater. This was divided into three parts:

   (a) Improvement of the holding of waste on site.
   (b) Improvement of transportation of waste away from the site.
   (c) Improvement of treatment of waste where feasible.

3. What are the alternatives?

   The alternatives were:

   (a) To provide larger holding tanks on site.
   (b) To separate apartment septic-tanks and discharge the liquid into a communal holding tank so that the liquid waste problem would be minimized.
   (c) To separate the solids from the liquids as soon as possible.
   (d) To develop a pipe system.
   (e) To have more frequent or improved mechanical hauling.

(f) To create a central organization in charge of several organizations.

4. What are the recommendations?

Group A decided upon a mixed solution. For urban fringe areas, it recommended that several apartments be connected to septic-tanks for solids removal. The wastes would then be discharged to a larger holding tank from which it could be hauled away or piped into a nearby lagoon or discharged into a stream. This would require improvement of the transportation system, either by developing a method of mechanical hauling, by developing a piping system, or by increasing the size of the holding tanks.

As far as the institutional problem is concerned, Group A recommended assistance in creating a central organization with regulatory authority to handle all the necessary elements of a total disposal system.

4.2 Report of Group B

Considering the same constraints as Group A, it was decided by Group B that there were only two viable alternatives. One was to return to the use of pit privies with cesspools, probably pour-flush latrines with periodic emptying. The emptying would be performed in the traditional manner by the "honey dipper."

The other more preferable solution would be the creation of a tipping bucket system with small bore sewers. There would be public taps and all the water would be carried home. This water would be used to wash dishes, etc., and then it would be used for flushing the toilet which would be connected to a central sewer system. This method could employ small bore sewers which could be incorporated into a formal sewer system at some point in the future. The tipping buckets would be built into the head of the line in the central sewer system in order to provide the volume of wastewater necessary to flush the system.

Chapter 5

EVALUATIONS

The workshop attendees agreed that the seminar was a valuable source of information. One common concern was the lack of time to absorb the information. Although most of the participants felt the seminar was "well constructed" and "very informative," a few of them felt that some topics, e.g. case studies, were not developed sufficiently.

The topics, many felt, were too broad and the objectives too vague. Others requested a more clearly defined scope. One person wanted the topics slanted toward rural conditions and did not consider Cairo a good example. It was suggested that in the future some discussion of cost recovery, institutional constraints and a model program be included.

As for the method of presentation, most suggestions were aimed at saving time. For instance, "time was wasted in designating team leaders;" "predesignated facilitators would have prevented one group from dominating the discussion." One participant suggested premailing case background information or guidelines so that the audience could be better prepared.

Virtually all of the participants stated the need for more seminars both here and abroad. Some suggestions for future topics included health, socio-cultural factors affecting water supply and sanitation, and appropriate technology. A series of seminars on related topics were noted as "extremely useful."

APPENDIX A

WATER AND SANITATION FOR HEALTH (WASH) PROJECT
ORDER OF TECHNICAL DIRECTION NO. 51

AUGUST 20, 1981

TO: Dennis Warner
WASH Project Director (Acting)

FROM: S&T/HEA, John H. Austin

THRU: S&T/HEA, Victor W.R. Wehman, Jr., P.E., R.S
AID WASH Project Manager

SUBJECT: Implementation of Workshop on Excreta Disposal in Non-Sewered Areas

REFS: Request from Joe Haratani, NE/TECH (see attachments)

1. WASH contractor requested to provide assistance in developing, implementing and preparing summary documentation for the above workshop, including:

   a. Contacting speakers and participants in consultation with Joe Haratani (see attachments).

   b. Preparing workshop agenda (see attachments).

   c. Arranging for workshop site.

   d. Arranging for instructional materials prior to and during workshop.

   e. Preparing workshop proceedings.

   f. Taping workshop.

2. WASH contractor/subcontractor authorized up to 40 person-days for speakers and staff time including up to 15 person-days per diem and travel for speakers.

3. Expenses are authorized for preparation of materials and proceedings of workshop and other necessary miscellaneous costs.

4. Workshop to be held on a date agreeable to Joe Haratani and S&T/HEA.

5. A dress rehearsal shall take place the day before the workshop, to coordinate speakers and content.

6. Workshop proceedings to be finalized by 16 October 1981.

JHA:ja

DRAFT AGENDA

WORKSHOP ON
EXCRETA DISPOSAL IN NONSEWERED AREAS

8:45	Workshop Introduction - Haratani
9:00	Overview of Excreta Disposal Systems - Bonneau Dickson a. Economic Considerations (Water-carriage vs. non-water carriage) b. Types of non-water carriage systems c. Treatment methods d. Disposal materials e. By-products (bio-gas, sludge) f. Re-use g. Implementation h. Social/cultural constraints i. Institutional constraints
9:45	Discussion
10:00	Composting Toilets and Water Saving Devices--Michael Skenfield
10:45	Discussion
11:00	Latrine Emptying - David Dalmat
11:45	Discussion
12:00-1:15	Lunch
1:15	Pit and vault privy, sullage management treatment; treatment and disposal of septage, gray water and organic solids - Max Kroeschel
2:00	Discussion
2:15	Presentation of Workshop Problem - Haratani/Snead
2:30	Problem Resolution by Work Groups. Group A. House Connections with Flush Toilets Group B. Public Fountains with Flush Toilets and Handpumps with Flush Toilets
4:00	Discussion
4:45	Closure
5:00	Finish

SUGGESTED SPEAKERS AND PARTICIPANTS
WORKSHOP ON EXCRETA DISPOSAL IN NON-SEWERED AREAS

SPEAKERS:

1. Bonneau Dickson - - - - - - Overview, Costs, Etc.
2. Michael Skenfield - - - - - Composting Toilets, Low Volume Fixtures
3. David Dalmat - - - - - - - Latrine Emptying
4. Max Kroeschel - - - - - - - Vault Toilets, Gray Water

PARTICIPANTS:

1. Joseph Haratani, NE/TECH
2. Charles Mathews, LA/DR
3. Francis Montanari, NE/PD
4. Wally Bowles, NE/PD
5. Jim Habron, NE/PD
6. Jack Snead, AFR/DR
7. Mike Gould, AFR/DR
8. Harold Rice, ASIA/DR
9. Gene McJunkin, S&T/HEA
10. Vic Wehman, S&T/HEA
11. John Austin, S&T/HEA
12. Jim Bell, Peace Corps
13. Craig Hafner, WASH
14. Jim Beverly, WASH

JHA:ja

APPENDIX B

WORKSHOP AGENDA

EXCRETA DISPOSAL IN NON-SEWERED AREAS

September 10, 1981

Introduction - (Woolf)

Session I
- Case Study Problem Presentation - (Haratani)

Session II
- Overview of Execreta Disposal Systems - (Dickson)

Session III
- Composting Toilets - (Skenfield)

Break

Session IV
- Pit and Vault Privies - (Kroschel)

Lunch

Session V
- Latrine Emptying - (Dalmat)

Session VI
- Case Study Work Groups - (Woolf)
  - Group A - (Haratani)
  - Group B - (Snead)

Break

Session VII
- Work Group Reports and Discussions - (Woolf)

Session VIII
- Workshop Evaluation/Feedback - (Woolf)

Adjournment

APPENDIX C

Speakers

Bonneau H. Dickson, Jr.
c/o Harris and Associates
911 Moraga Road
Lafayette, California 94549

Michael W. Skenfield
IDA
495 Main Street
P.O. Box 1020
Murphy's, California 95247

Max L. Kroschel
Box 204
Bodega, California 94922

David J. Dalmat
7011 Poplar Avenue
Takoma Park, Maryland 20012

APPENDIX D

Participants

Charles Mathews - AID

Walter Bowles - AID

James Habron - AID

Harold Rice - AID

F.E. McJunkin - AID

Victor Wehman - AID

John Austin - AID

James Bell - Peace Corps

Craig Hafner - WASH

Clarence Calbert - ISTI

Hasan Hasan - AID

Charles Mantione - AID

Palmer Stearns - AID

Samuel Castrillon - IBRD

Stephen Giddings - AID

Frederick Reiff - PAHO

Alfred Hotvedt - AID

OBSERVERS

James Beverly - WASH

Dennis Warner - WASH

Wesley Copeland - ISTI

Nihal Goonewardene - ISTI

APPENDIX E

Cairo Case Study Data

WORKSHOP ON EXCRETA DISPOSAL IN NON-SEWERED AREAS

CASE STUDY - CAIRO

THE ATTACHED MATERIALS WILL PROVIDE YOU WITH SOME BASIC INFORMATION DESCRIBING THE DEMOGRAPHIC, PHYSICAL, ECONOMIC AND SOCIO-CULTURAL CHARACTER OF CAIRO'S FRINGE AREAS. THIS AFTERNOON YOU WILL BE ASKED TO ADDRESS THE PROBLEM OF EXCRETA DISPOSAL IN THE NON-SEWERED AREAS OF CAIRO AND RECOMMEND ALTERNATIVES. YOU ARE ASKED TO DRAW ON YOUR OWN TRAINING AND EXPERIENCE, THE INFORMATION PROVIDED HERE AND BY THE SPEAKERS. EACH WORKSHOP GROUP WILL HAVE RESOURCE PEOPLE WHO WILL SUPPLY ANY ADDITIONAL INFORMATION NEEDED BY YOU AND YOUR WORKING GROUP. GOOD LUCK!

EGYPT

Peter Mansfield
author of *Nasser's Egypt* and *The Arabs*

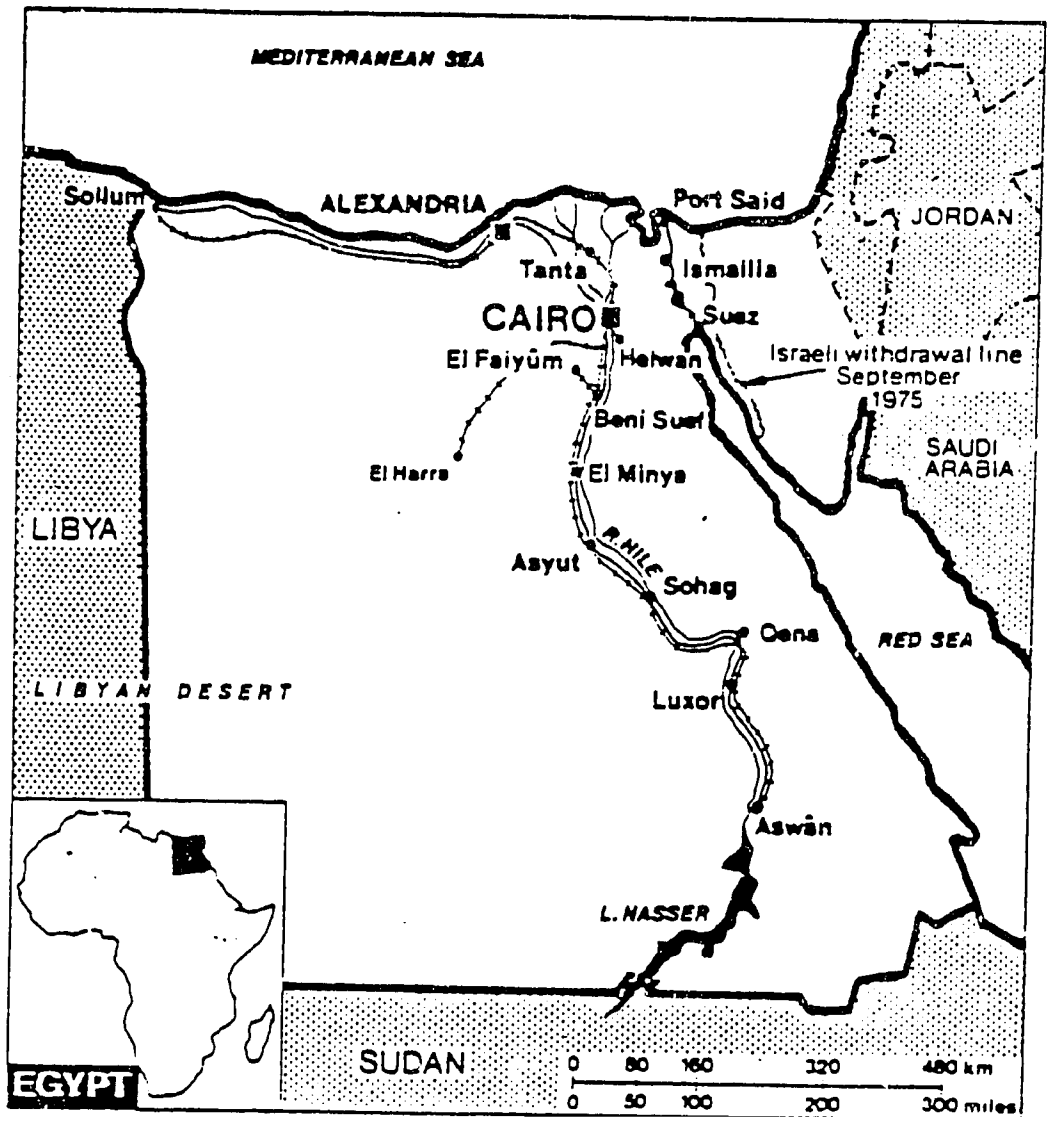

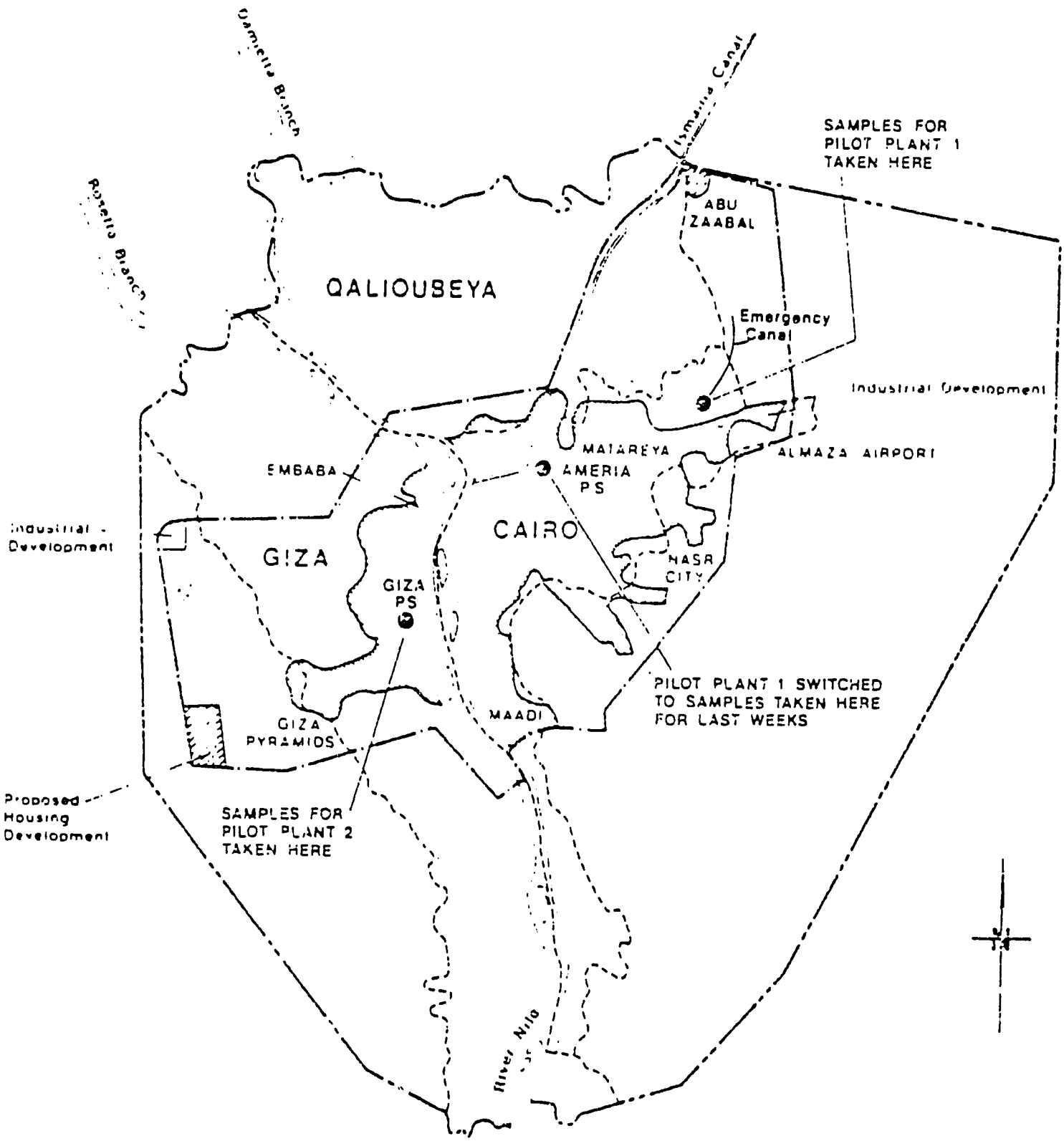

LEGEND

- Greater Cairo Boundary
- Revised Project Area Boundary
- Governorate Boundary
- GIZA — Name of Governorate
- 1980 Urban Boundary

SCALE

km 5 0 5 10 km

GREATER CAIRO AREA

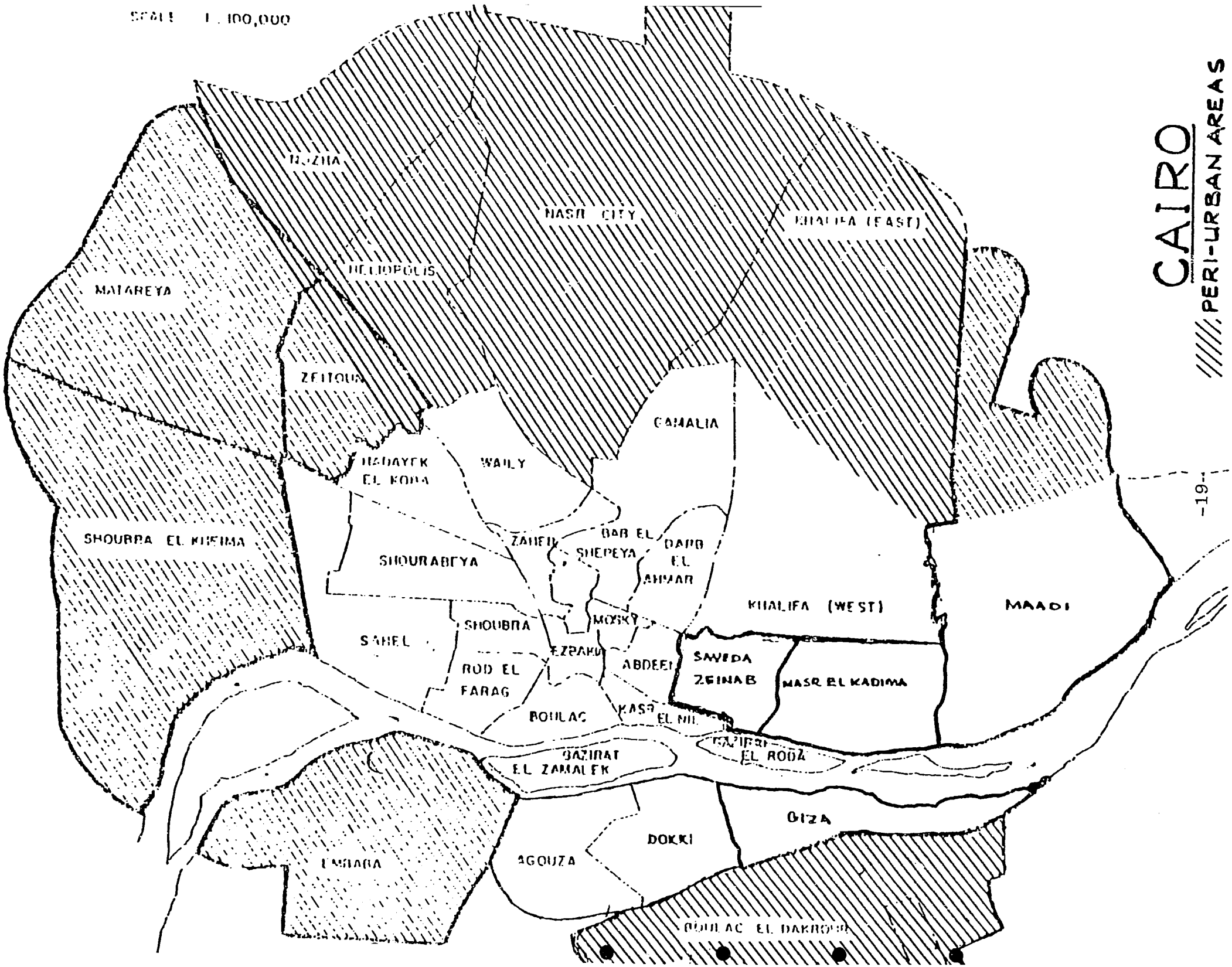
SCALE 1 : 100,000
CAIRO
PERI-URBAN AREAS
NASR CITY
KHALIFA (EAST)
HELIOPOLIS
MATAREYA
ZEITOUN
GAMALIA
WAILY
HADAYEK EL KOBA
SHOUBRA EL KHEIMA
SHOURABEYA
ZAHER
BAB EL SHEREYA
BAB EL AHMAR
KHALIFA (WEST)
MAADI
SHOUBRA
MOSKY
SAHEL
EZBAKIA
ABDEEN
SAYEDA ZEINAB
MASR EL KADIMA
ROD EL FARAG
BOULAC
KASR EL NIL
GAZIRAT EL ZAMALEK
GAZIRAT EL RODA
GIZA
DOKKI
AGOUZA
EMBABA
BOULAC EL DAKROUR

WORKSHOP

ON

EXCRETA DISPOSAL IN NON-SEWERED AREAS

CASE STUDY: CAIRO URBAN FRINGE AREAS *

DEMOGRAPHIC DATA

POPULATION:	Total 10 Million (Greater Cairo)
	Non-Sewered 3 Million (approximate)
POPULATION DENSITY:	400 to 1000/Hectare (40,000 to 100,000 Km^2
GROWTH RATE:	4.5%/Year (including in-migration)
LITERACY:	Male 75%, Female 50%
LIFE EXPECTANCY:	55 Years
FAMILY SIZE:	5.5 Persons
HOUSING DENSITY:	2 Persons/Room

PHYSICAL DATA

31.5^{o} North Latitude at the beginning of Nile River Delta

ELEVATION:	20 to 50 Meters
TEMPERATURE (^{o}C):	Cairo average daily 8° to 38° ($47^{o}F$ to 95^{0} F) Mean 21° ($71^{o}F$) (Days are hot, evenings are cool.) Summer 20° to 42° Winter 5° to 18°
HUMIDITY:	Very Low
ANNUAL PRECIPITATION:	2.5 cm (1.0 inch)
HOUSING TYPE:	Apartments 2+ stories

*Conversions: (approximate)
1 hectare = 2.5 acres
1 km^2 = 0.4 sq. miles
1 meter = 3.3 ft.
1 liter = 1.1 quarts

EXCHANGE RATE:
L.E. 1.00 · U.S. $1.25

CONSTRUCTION:	90% Brick $\bar{c}$ Concrete frame, Some masonry and mud brick
WATER SUPPLY:	(a) 50% house connections (b) 50% public fountains/handpumps
WATER CONSUMPTION:	(a) 50 LCD (b) 25 LCD
GROUND WATER TABLE:	1 to 2 Meters
SOIL PERMEABILITY:	Low to Moderate (Top soil or fill is 2 to 10 meters deep. Underlying sand is below water table.)
TYPICAL LOT SIZE:	Informal Housing - 100 M^2 Formal Housing - 150 M^2
OPEN (COURTYARD) SPACE:	Nil to Very Limited
STREET WIDTH:	3 Meters Minimum
LAND COSTS:	Min. / Ave. Informal Housing Areas L.E. 6/M^2 L.E. 66/M^2 Formal Housing Areas L.E. 20/M^2 L.E. 89/M^2
EXCRETA DISPOSAL:	(a) Cesspools (b) Pit privies; roofs, yards, canal banks, streets
GARBAGE COLLECTION:	Some public and private collection services; estimated 15 to 20% of population not served. Large amount of garbage thrown into streets and empty lots.
CESSPOOL SIX:	Min. 1 M^3 Ave. 2 M^3
KITCHENS:	Own 70% Share 5% None 25% cook in room or hall)
WASH KITCHEN UTENSILS:	Kitchen 50% Entrance Way 10% Canal 5% Courtyard 4% Room or Hall 30%

ECONOMIC DATA

FAMILY INCOME:	L.E.* 50/mo to 100/mo
SKILLED LABOR:	L.E. 5 to 10/day
SKILLED LABOR:	L.E. 50/mo to 100/mo
UNSKILLED LABOR:	L.E. 1 to 4/day
RENT:	L.E. 5/mo. Rent Control in effect
WATER: (If bought)	L.E. 1 to 3/mo
ELECTRICITY:	L.E. 2.5 to 3/mo.
CONSTRUCTION MATERIALS:	Gravel - L.E. 6.50/M^3 Earth - L.E. 1.00/M^3 Cement - L.E. 70 metric Ton L.E. 3.75/sack) Rebar - L.E. 300 metric ton Brick - L.E. 20/1000 units
INFLATION RATE:	15 - 20%/year

OWNERSHIP OF GOODS (% of population):

	Fringe	Urban
Autos	2	12
Telephones	0	22
Refrigerator	14	35
LP Gas Stove	36	72
Electricity	95	95

SOCIO-CULTURAL DATA

1. Dried sludge from Cairo is bought and used by farmers.
2. Manure is used to make dung cakes for fuel.
3. Irrigation drains carrying raw sewerage is used in fringe areas for clothes and kitchen utensil washing.
4. Full strength raw sewerage is used on farms near Cairo to irrigate vegetables.
5. Cesspool pumpage is dumped into irrigation canals.

APPENDIX F

Speakers' Presentations

U.S. AGENCY FOR INTERNATIONAL DEVELOPMENT

WORKSHOP ON NON-WATERBORNE EXCRETA DISPOSAL

WASHINGTON, D.C. - SEPTEMBER 10, 1981

OVERVIEW

Bonneau H. Dickson, Jr., P.E
Sanitary Engineer
Harris & Associates
Lafayette, California 94549

(See Table 1 for list of references)

A. CLASSES AND TYPES OF SANITARY FACILITIES

(See Table 2 for Types. Classes are listed below)

1. Waterborne and Sewered Community Facilities conventional

Very expensive. Treatment plant usually required. High operating and maintenance (O&M) cost. High level of municipal involvement. Good public O&M organization and administration required. The "modern" standard thus highly acceptable. The ultimate in health and convenience.

a. Conventional Sewers. 200 mmm (8") minimum size, self cleansing velocities (.6-1.0 mps, 2-3 fps).

Requires water piped inside the house and cistern (tank) flushed toilets.

b. Small Bore Sewers. Requires septic tanks or aquaprivies ahead of the sewer system to trap the heavier solids. Can be used with pour flush (PF) systems, which may not require water piped inside the house. May result in significant capital cost savings on the sewer system in areas with rock, very flat grades, and/or high groundwater, but the savings are offset, at least in part, by the cost of the

needed septic tank or aquaprivy. O&M costs and problems may be significantly greater than with conventional sewers.

2. Waterborne But Not Sewered. (Individual Facilities) septic tank + leach field

Moderately to very expensive. Use moderate to relatively large amounts of water. Moderate to very high standard of convenience, with toilet inside the house. High standard of health. Little or no municipal involvement. Can receive sullage (greywater). Disposal usually to a seepage system (leach field or soakage pit), which tends to limit the density at which they can be used. Can be upgraded to sewered system relatively easily as densities increase.

a. Septic Tank

Often as expensive as sewers. Requires piped water supply-cistern flushed. Takes sullage water. (Sullage should go to the last compartment.)

b. Aquaprivy

Direct drop from toilet into tank. Water seal often not maintained due to either leaky tank, or too little flushing water. May freeze.

3. Privy Systems → Temporary installation - moved when full.

Lowest cost. Adquate for health but not as convenient as more expensive systems -- odor and insect problems. Simple construction, operation and maintenance. Separate sullage disposal necessary. Smallest area requirement. May be rejected as "inferior" technology.

a. Pour Flush

Allows toilet to be inside the house. Reduces odor problems. Requires a small but significant amount of water. May freeze. May not pass bulky anal cleansing materials.

b. Dry Privy

Does not require water. Not suitable for inside the house.

B. ECONOMIC SUMMARY

1. Costs

See Table 3.

2. Affordability

Two rules of thumb:

Recurring costs should be no more than 2 percent (some people recommend up to 5 percent) of income for water and sanitation utilities, thus, say 1 percent for sanitation alone.

The capital costs should be no more than one month's wages.

Required income is shown at the bottom of Table 2.

3. Flexibility of Costs

Conventional facilities are not "cheap" in LDCs. Costs of contracted work are almost as high (say 80 percent) in LDCs as in the West. Project labor typically costs less, but is less efficient and represents only perhaps 50 percent of the project costs. Equipment, including pipe, usually costs more due to freight, insurance, risk, etc. There is not much potential for dramatic reductions in cost on traditional, engineered, contracted facilities.

There is a large potential to reduce the out of pocket cost of individual facilities if they are built by the beneficiaries themselves. (Self help)

4. Benefits

Very difficult to estimate or assess. Wagner and LaNoix, page 15, cite reference which claims that the program costs in one fairly typical case were fully amortized in less than five years by savings on typhoid, diarrhea and enteritis alone.

C. TREATMENT METHODS

1. Lagoons

Require considerable land area. Inexpensive and simple to construct, operate, and maintain. Can be combined with reclamation programs since they can provide storage. Usually the only viable treatment method.

2. Conventional High Technology (Clarifiers, Activated Sludge, Trickling Filters, etc.)

High costs. LDCs often cannot muster the O&M effort even if the facilities are affordable. No storage.

3. Intermediate/Alternative/Innovative Techology

Harris & Associates has used or evaluated:

a. Mound Systems

Port Costa; Warm Springs Dam Campgrounds; Stockton

b. Recirculating Sand Filters

Port Costa, Anchor Bay

c. Overland Flow

Anchor Bay

d. Intermittent Sand Filters

Tulelake

e. Vacuum Sewers

Stockton, DeWitt Center

f. Pressure Sewers

Stockton, DeWitt Center

g. Clustered Small Facilities

Stockton, Bell Road

h. Miscellaneous

Vertical shaft into sea cave. Anchor Bay. Submarine French drain, Port Costa.

4. No Treatment (Including Ocean Outfalls)

Should be considered. The cost of environmental degradation due to water pollution is often low, and the cost of environmental improvement might be better postponed until incomes rise. Health risk if untreated sewage is discharged to surface water that is used as a water supply. In arid regions, carefully ponder reuse potential before deciding to use an ocean outfall.

D. DISPOSAL METHODS

1. To Groundwater

Leachfields. Seepage pits. Irrigation.

2. To Surface Waters

E. BYPRODUCTS

1. Compost

Technically feasible but carries a threat to health. Requires a considerable degree of knowledge to be used safely. Requires handling excreta and considerable diligence.

2. Biogas

Not suitable for individual systems. Requires more manure than generated by a single family to be economical. Difficult to startup and operate. The hood may be too expensive. Harris & Associates farm scale experience in California.

SUMMARY: Not very promising, but might be feasible where fuel is extremely costly, the users are skilled and motivated, and/or organic wastes are available from livestock or industries.

Said to be working widely in India.

F. REUSE

Long history of sewage farming.
Widely practiced, whether admitted or not. EPA study of U.S. rivers.
Drains versus canals in Egypt. Grove west of Suez City.
Health considerations versus economics. Recent history in California.
Non-traditional evaluation and risk taking decision needed to approve reuse.
Kathmandu truck gardens.
Kitchen gardens-sullage.

G. CONSTRAINTS

(See Table 4 for an annotated list of constraints. See Table 5 for the compatibility of these constraints with the various classes of sanitation facilities for urban fringe areas of Cairo, Egypt).

1. Technical (Engineering/Health)

2. Non-technical (Social-Cultural, Institutional, Economic)

H. INGREDIENTS OF A SUCCESSFUL PROGRAM (See Table 6)

TABLE 1

ANNOTATED REFERENCE LIST

NON-WATERBORNE EXCRETA DISPOSAL

1. California State Water Resources Control Board, January, 1980, Guidelines for Evapotranspiration Systems, Sacramento, California.

   Basic manual on evapotranspiration systems.

2. California State Water Resources Control Board, January, 1980, Guidelines for Mound Systems, Sacramento, California.

   Basic manual on mound systems.

3. California State Water Resources Control Board, January, 1980, Residential Greywater Management in California, Sacramento, California.

   Basic manual on greywater management.

4. Engineering-Science, Inc., 1979, Water Supply and Sewerage Feasibility Study, Bhairawa (Nepal).

   These studies covered ten towns and cities in Nepal. Non-waterborne sanitation facilities were recommended for all of the town and cities except Kathmandu. Costs were developed for privies.

5. R. Feachem, et. al., 1978, Water, Health and Development, Tri-Med Books Ltd., London, England.

   The Lesotho study.

Table 1 (continued)

6. R. Feachem, M. McGarry, and D. Mara, 1977, Water, Wastes and Health in Hot Climates, John Wiley & Sons, Chichester, England.

Classifies water related infections. Explores use of standards less than International Drinking Water Standards. Good, common-sense book by experienced authors.

7. E. F. Gloyna, 1971, Waste Stabilization Ponds, Monograph No. 60, World Health Organization, Geneva, Switzerland.

The basic design manual on waste stabilization ponds.

8. F. H. Lamson-Scribner, Jr. and J.W. Huang, (Editors), 1977, Municipal Water Supply Project Analysis: Case Studies, for the World Bank, Washington, D.C. 20433.

Despite the title, several of the cases involved sanitation as well as water. Aimed at economists, but full of useful data.

9. H. T. Mann and D. Williamson, June, 1973, Water Treatment and Sanitation, Intermediate Technology Publications, 9 King Street, London WC2E 8HN, England.

Manual on practical, appropriate technology.

10. R. J. Saunders and J. J. Warford, 1976, Village Water Supply, Economics and Policy in the Developing World, The Johns Hopkins University Press, (for the World Bank), Baltimore, Maryland.

High level policy implications of improved water supply and sanitiation. Much economic data, some cost data, no technical data.

Table 1 (continued)

11. Scientific American, September, 1980, Economic Development, W. H. Freeman and Co., San Francisco, California.

    Good overview of economic development but not much directly on sanitation. The whole issue was on this topic.

12. U.S.Environmental Protection Agency, February, 1980, Innovative and Alternative Technology Assessment Manual, office of Water Program Operations, Washington, D.C. 20460

    Gives a basic description, data sheet and cost estimate on over 100 types of treatment processes and facilities. Experience of Harris & Associates has been that the cost data are reasonably accurate when adjusted to an appropriate ENR index.

13. U.S. Environmental Protection Agency, October, 1980, Design Manual, Onsite Wastewater Treatment and Disposal Systems, Design Manual, Office of Water Program Operations, Washington, D.C. 20460.

    Good technical manual. Contains sections on project methodology and evaluation of soil properties.

14. University of Wisconsin, April, 1980, Potable Water for Dispersed Populations in Central Tunisia, Regional Planning and Area Development Project.

    Includes some useful cost data on small scale water systems.

15. E. G. Wagner and J. N. Lanoix, 1958, Excreta Disposal for Rural Areas and Small Communities, Monograph No. 39, World Health Organization, Geneva, Switzerland.

    A basic technical manual on privies.

Table 1 (continued)

16. World Bank, Appropriate Technology for Water Supply and Sanitation, Washington, D.C.

This reference contains 13 volumes, as noted below. As of August, 1981, only volumes 1a, 2 5 and 11 were available. The remaining volumes are expected to be published soon. This series is expected to be an excellent summary and review of the older references and past experience.

Vol. 1 Technical and Economic Options, J. M. Kalbermatten, D. S. Julius, and C. G. Gunnerson, a condensation of Appropriate Sanitation Alternatives: A Technical and Economic Appraisal, forthcoming from Johns Hopkins University Press.

Vol. 1a A Summary of Technical and Economic Options.

Vol. 2 A Planner's Guide, J. M. Kalbermatten, D. S. Julius, C. G. Gunnerson, and D. D. Mara. A condensation of Appropriate Sanitation Alternatives: A Planning and Design Manual, forthcoming from Johns Hopkins University Press.

Vol. 3 Health Aspects of Excreta and Sullage Management--A State-of-the-Art Review, R. G. Feachem, D. J. Bradley, H. Garelick, and D. Mara. A condensation of Sanitation and Disease: Health Aspects of Excreta and Wastewater Management, forthcoming from Johns Hopkins University Press.

Vol. 4 Low Cost Technology Options for Sanitation--A State-of-the-Art Review and Annotated Bibliography, W. Rybczynski, C. Polprasert, and M. McGarry. Available, as a joint publication, from the International Development Research Centre, Ottawa, Ontario, Canada.

Vol. 5 Sociocultural Aspects of Water Supply and Excreta Disposal, M. Elmendorf and P. Buckles.

Table 1 (continued)

Vol. 6 Country Studies in Sanitation Alternatives, R. A. Kuhlthau (ed.).

Vol. 7 Alternative Sanitation Technologies for Urban Areas in Africa, R. G. Feachem, D. Mara, and K. O. Iwugo.

Vol. 8 Seven Case Studies of Rural and Urban Fringe Areas in Latin America, M. Elmendorf (ed.).

Vol. 9 Design of Low-Cost Water Distribution Systems, Section 1 by D. T. Lauria, P. J. Kolsky, and R. N. Middleton; Section 2 by K. Demke and D. T. Lauria; and Section 3 by P. V. Herbert.

Vol. 10 Night-soil Composting, H. I. Shuval, C. G. Gunnerson, and D. S. Julius.

Vol. 11 A Sanitation Field Manual, December, 1980, J. M. Kalbermatten, D. S. Julius, and C. G. Gunnerson.

Excellent technical manual. Good methodology for selecting the type of sanitation facility that is best suited to a particular situation.

Vol. 12 Low Cost Water Distribution--A Field Manual, C. D. Spangler.

17. World Bank, March, 1976, Village Water Supply, A World Bank Paper, Annex 3, Washington, D.C.

Annex 3 contains a brief summary of excreta disposal methods. Much of the information on water projects is relevant to sanitation projects.

18. World Health Organization International Reference Centre for Community Water Supply, February, 1977, Practical Solutions in Drinking Water Supply and Wastes Disposal for Developing Countries, Contributions to a Mail Survey, Voorburg (The Hague), the Netherlands.

Many innovative items.

TABLE 2

TYPES OF SANITATION FACILITIES

Class/Type/Description	Major Advantages	Major Disadvantages
Waterborne and Sewered		
Sewer		
Inside toilets. Waterborne sewerage system.	The ultimate in health and convenience. "Modern", thus socially and institutionally acceptable.	Very expensive. Requires large quantities of water and a piped water supply inside the house. Large quantities of wastewater must be treated. High level of municipal involvement--good public O&M organization needed.
Waterborne but not Sewered		
Septic Tank		
Tank for settling and anaerobic decomposition. Liquid disposal to soakage system or sewer.	High degree of health and convenience. Allows use of small bore, flat slope sewers. Easy to upgrade. Takes household sullage.	Very expensive. Costs can be as high as for sewers. Requires large amounts of water-a supply piped inside the house.
Aquaprivy		
A septic tank beneath the seat or squatting plate. Liquid disposal to soakage system or sewer.	Toilet can be inside the house. No odor or insect problem. Easy to upgrade. Can be modified to take sullage.	Relatively high cost. Requires water. Tanks are often not water tight, and/or the users do not add enough water to maintain the water seal. May freeze.

Table 2 (continued)

Class/Type/Description	Major Advantages	Major Disadvantages
Simple Privy Systems		
Pit Privy		
Simple temporary pit beneath a seat or squatting plate with a superstructure. When full, is sealed and abandoned.	Lowest cost. Simple to construct and operate. Do not requre water. Does not need to be emptied. Little or no municipal involvement. Can take any kind of anal cleansing materials.	Odors. Fly and mosquito breeding. Cannot take sullage. Not suitable for inside the house.
Bored-Hole Privy		
Same as pit privy but with a small diameter pit.	Same as for simple pit privy. Under the proper circumstances and with the right equipment, can be more quickly constructed than pit privies.	Quickly fills up and must be replaced. Fouling of walls near the top may enhance insect breeding. Since depth is greater, there is greater risk of reaching and contaminating the groundwater.
Ventilated Improved Pit (VIP)		
Same as pit privy but with ventilation pipe added.	Same as for simple Pit Privy. Vent pipe reduces odor problems, and can trap emerging flies and mosquitoes.	Cannot take sullage. Not suitable for inside the house.
Pour Flush(PF) Toilet		
An improvement to the VIP.	Further reduces odor and insect problem. Allows toilet to be inside the house. Excreta is out of sight. Easy to upgrade to a sewer system.	Increases the amount of liquid that must percolate into the soil. Requires a small volume of water. Not suitable for freezing climate. May not accept bulky anal cleansing materials.

Table 2 (continued)

Class/Type/Description	Major Advantages	Major Disadvantages
Vault Privy Similar to VIP privy but a permanent vault is used. Intended to be emptied and reused.	Permanent, thus less space required. Resource recovery possible.	Slightly more expensive than the VIP. Excreta must be handled. May require a scavenger organization unless user also wants to use the excreta.
Earth Closet Essentially a pit privy with the pit being offset and larger.	Same as vault privy. Cleaning required only once in many years, say once in 15 to 20 years. No fear of children falling in since pit is offset. Excreta not visible. Pit can be easily accessible.	Same as Vault Privy. Slightly higher cost. Requires more land area. Chute becomes fouled and must be swabbed.
Double Privies Either pit or vault type but with two compartments, one in use, the other lying idle to allow pathogen die-off.	If excreta is left for at least one year, it is considered to be safe for reuse as fertilizer.	Two privies, thus more expensive and more land required. Requires higher user understanding and attention to assure that the second unit is in fact not used. Requires handling of the excreta.
Composting Privy Either pit or vault type. Two units required. Organic and/or other materials added to adjust moisture content, provide air passage, and adjust nitrogen/carbon ratio. Primarily for societies that reuse excreta.	Remains aerobic and thus produces compost faster.	Requires supply of organic or other materials. Requires separate urine disposal. Very high degree of user attention required. If the municipality must collect the compost, O&M costs may be significant.

Table 2 (continued)

Class/Type/Description	Major Advantages	Major Disadvantages
Bucket Latrine Excreta and sometimes the urine are carried away in buckets. Sometimes called a "conservancy" system.	Can be used where the soil is impermeable. Does not require water.	Almost always results in a severe public health hazard due to spillage, unavailable buckets, etc. High operating cost. Requires much handling of raw excreta. Almost never a workable solution.
Trench Latrine A simple trench that is partially backfilled by each user. Usually considered a field expedient only.	No cost.	Excreta remains at shallow depths. Requires that users cover the excreta. No privacy.
Overhung Latrine A toilet extended out over a body of water.	May be the only feasible system for people living on boats or on houses on stilts over waterbodies.	Humans almost always contact or use the water that is used for disposal.
Chemical Toilet Essentially a bucket latrine with a chemical in the bucket.	Does not require water or subsurface facility.	High costs. Requires handling of the excreta.

HARRIS & ASSOCIATES
CONSULTING ENGINEERS
911 Moraga Road
Lafayette, California 94549
(415) 283-8300

TABLE 3

TYPICAL PER CAPITA COSTS
OF VARIOUS CLASSES OF SANITATION FACILITIES

	$US (1981) / Capita					
	WATERBORNE SEWERED		WATERBORNE NOT SEWERED		PRIVY SYSTEMS	
	Low	High	Low	High	Low	High
Capital Costs	200 -	700	35 -	200	2 -	30
Annual O&M Costs	4 -	14	0.35 -	2.00	0 -	0.30
REQUIRED PER CAPITA INCOME PER YEAR						
1. O&M ≤ 1% of Income	400 -	1400	35 -	200	0 -	30
2. Capital Cost ≤ 1 Month's Wages	2400 -	8400	420 -	2400	24 -	360

NOTE: Per capita costs assume six users per facility. To get total cost per facility, multiply by six.

TYPICAL RELATIVE COSTS OF ENGINEERED, CONTRACTED SANITATION FACILITIES

IN THE WEST

LABOR	50
MATERIALS	50
TOTAL	100

IN LESSER DEVELOPED COUNTRY (LDS)

LABOR (ONE QUARTER OF THE COST BUT ONLY HALF THE EFFICIENCY)

1/4 COST X 2 EFFICIENCY X 50 = 25

MATERIALS (MORE EXPENSIVE DUE TO FREIGHT, INSURANCE, RISK, ADMINISTRATION, ETC., SAY BY 30%)

1.30 X 50 = 65

TOTAL 90

TABLE 4

CONSTRAINTS ON NON-WATERBORNE SANITATION FACILITIES

ENGINEERING CONSTRAINTS

1. High Groundwater Level

Causes leaching systems to flood. Contamination that is in contact with the groundwater travels farther, faster. Poses a threat to any nearby shallow wells. Makes construction of sewers (or other underground facilities) difficult.

2. Poorly Leaching Soil

Poorly permeable soils render leaching systems infeasible, or require large (expensive) facilities. If the soil is rock, digging will be difficult.

3. Limited Availability and High Cost of Land

There may not be room for leaching systems in densely settled areas (urban fringes). In densely populated agricultural areas, it may not be feasible to give up agricultural land for use as leaching area. In any densely settled area, the cost of land is likely to be high.

4. Availability of a Water Supply

Sewers and septic tanks, and to a lesser extent aqua privies and pour flushed systems, require a piped water supply and relatively large volumes of water. If water is carried to the house over any appreciable distance (more than say a few hundred meters), the volume will generally not be sufficient for a system that depends on water.

5. Adaptability to Future Sewerage Systems

Consideration should be given to whether the system that is devised for the present can be converted if the sewerage system is extended into the area.

Table 4 (continued)

6. Appropriateness of the Technology *

The user population must be able to build and to maintain the facilities, hence the facilities must be understandable and must be made of materials and with construction techniques that the local people can provide. The appropriateness of the technology is heavily dependent upon the skills of the users (see below).

NON-ENGINEERING CONSTRAINTS

21. Availability of Trained Personnel *

There must be available personnel with the necessary skills in:

a. Health education

b. Construction

c. Maintenance and operation

Training programs are likely to be a necessary part of a sanitation program. The skills include not only the technical skills, but also the human skills necessary to persuade the users to accept the program.

22. Social/Cultural Acceptability *

For the program to succeed, the local population must be willing to use the facilities, maintain them, and probably to construct them in the first place. Gaining acceptance usually has both a positive and a negative aspect--gaining support, and overcoming objections. A public participation program is usually critical.

Some of the important issues include:

a. Local traditions and practices involving excreta disposal.

What kind of anal cleansing is practiced?

Will the people handle excreta?

Is excreta sought after as a fertilizer?

Table 4 (continued)

How much privacy is required? Usually a privy is necessary for each family. Shared or communal facilities are rarely successful.

b. "Image"

Will any sort of non-waterborne sanitation facility be viewed as "inferior" or "second rate" technology and thus be rejected. This may be more of a problem with the managerial and administrative elite than with the user population. The best solution may be to show that these systems were used in the West until a short time ago and are only "interim" in the host country until incomes rise.

23. Institutional *

Who provides or builds what? Who maintains that which has been built? Institutional features may involve at least the following:

a. Political attractiveness. Established bureaucracies will resist programs that reduce their spheres of influence. Moreover they may resist any program that requires them to think or act differently. Low technology alternatives may be unattractive--a native engineer just back with a Ph. D from a prestigious institution where only the latest technology was studied, with perhaps a year of experience in a hugh western engineering firm working on multi-million dollar, advanced technology projects, is unlikely to be as excited about a privy program as about some "modern" system.

b. Organization and Administration. It is notoriously difficult to develop effective and efficient public organizations in LDCs. Any alternative that requires such an organization, must provide for its creation and maintenance. Problem areas may include:

i) Financial. Host country may not be able to provide local or foreign funds. Host country

Table 4 (continued)

priorities may cause the O&M funding to be reduced or cut off entirely shortly after the foreign aid program ends. Host government pay scales may not be sufficient to attract and keep a qualified staff.

ii) Construction. There may be no local construction capability.

iii) Operation and Maintenance. There may be little or no local tradition or experience with O&M for the type of facilities being provided.

24. Complementary Inputs

Effectiveness of a sanitation program probably will depend on simultaneous inputs from other sectors. Most important will probably be health education and training, and training in construction and maintenance skills. Other inputs may include improvements to the water supplies, better education programs, more manufacturing capacity, etc.

25. Environment

The system to be implemented must not cause unacceptable environmental degradation.

26. Health

The proposed facilities must provide improvements in public health and should, in so far as possible, not create additional health problems. Systems that involve handling excreta may create as many problems as they solve.

27. Cost *

The facilities must be affordable. Ideally, the cost will be such that most families can both build and maintain the facilities on their own. Subsidies are

Table 4 (continued)

often necessary to get the program going, and sometimes to assist with construction in on-going programs, but if subsidies are necessary on a permanent basis to finance operation and maintenance, the system is likely to become too much of a burden and be abandoned.

In the author's opinion, these are likely to be the most difficult constraints.

HARRIS & ASSOCIATES
CONSULTING ENGINEERS
911 Moraga Road
Lafayette, California 94549
(415) 283-8300

TABLE 5

SANITARY FACILITIES FOR FRINGE AREAS OF CAIRO, EGYPT
PRELIMINARY EVALUATION OF
COMPATIBILITY OF CLASSES OF FACILITIES WITH CONSTRAINTS*

ALTERNATIVE	A WATERBORNE SEWERED	B WATERBORNE NOT SEWERED	C PRIVY SYSTEM
Constraints			
Engineering Constraints			
1. High Groundwater Level	H	L	H
2. Poorly Leaching Soils	H	L	H
3. Limited Availability of Land	H	L-M	H
4. Water Supply			
a. Piped	H	H	H
b. Carried	L	M	H
5. Adaptability to Future Sewerage Systems	H	M-H	L
6. Appropriateness of the Technology	L-M	H	H
Non-Engineering Constraints			
21. Trained Personnel	L	M-H	H
22. Social-Cultural Acceptability	H	M-H	L?
23. Institutional	L-H	M	L-H
24. Complementary Inputs	M-H	M	M
25. Environment	M-H	M-H	M
26. Health	H	H	M-H
27. Cost	VH	H	L

* L = Low. Alternative only poorly overcomes the constraint.
M = Medium. Alternative is reasonably compatible with the constraint.
H = High. Alternative is highly compatible with the constraint.
V = Very.

TABLE 6

ATTRIBUTES OF A SUCCESSFUL PROGRAM

1. INVOLVEMENT OF THE USERS

a. The users are motivated to want it.
b. The users indicate their motivation by asking for the project.
c. The users are involved in the planning of the project.
d. The users provide personnel to the project (for planning, construction and operation and maintenance).

2. APPROPRIATENESS OF THE TECHNOLOGY

A. Appropriateness of the Institutional Arrangements.

1. Minimum municipal involvement--Maximum self reliance.
2. One (or at most a few) local people directly responsible.
3. Support of the village leaders.
4. Support of the government institutions.

B. Appropriateness of the Social/Cultural Features.

1. Satisfactory privacy.
2. Cleanliness/Aesthetics.
3. Social acceptability of using the facility.
4. Image/Status. (Not an "inferior" technology, "modern".)

C. Appropriateness of the Hardware.

1. Affordable (both first cost and recurrent costs. NOT necessarily the lowest cost alternative.)
2. Users understand the construction (if the users are to build it).
3. Users understand the maintenance (if the users are to maintain it).
4. Users understand the operation.
5. Builds from existing facilities and practices.

3. FUNDING.

a. Construction.
b. Operation & Maintenance.

. PROJECT PLANNING.

a. Long time horizon.
b. Altruistic and optimistic but balanced by being toughminded and pragmatic.

U.S.A.I.D., NE/TECH

APPROPRIATE TECHNOLOGY WORKSHOP
(on-site sewage disposal)

Composting/Greywater and Low-flow Sewage Systems

by

Michael W. Skenfield, Appropriate Technology Consultant.
Domestic Environmental Alternatives Inc, Murphys, Calif.

I. Definitions

A. Compost

B. Composting toilet system

C. Greywater

D. Greywater disposal system

E. Waste treatment/sewage disposal

F. Low-flow plumbing fixtures

II. Processes

A. Composting of sewage

1. Requirements of the process

a. receptacle construction

b. "seeding" receptacle

c. maintenance input to receptacle

d. venting system

2. Obstacles to the process

a. environmental

b. mechanical

3. Handling processed material

a. convenience

b. material handling equipment

c. disposition of material

B. Greywater disposal

1. Requirements of the process

a. household fixtures

b. collection methods

c. treatment

d. disposal

2. Obstacles to the process

a. mechanical

b. environmental

C. Low-flow water carriage systems

1. Fixture options

a. toilets

b. showerheads

c. lavy faucets

d. misc. sink faucets

III. System Advantages

A. Composting

1. Treatment environment

2. Space requirements

3. By-product

4. Treatment potential

B. Greywater

1. Space requirements

2. Disposal options

C. Low-flow water carriage

1. Treatment environment

2. Space requirements

3. Disposal options

IV. Reaction from Government Authorities

A. United States

1. EPA

2. California State Health Department

3. County departments

B. Sweden/Norway

1. University researchers

2. Sanitation officials

C. Yemen Arab Republic

V. Public Reaction

A. Users

1. Favorable

2. Unfavorable

B. Non-users

1. Favorable

2. Unfavorable

VI. Ideal Future Designs

A. Best combination

B. Projections on availability

Submitted 8-20-81

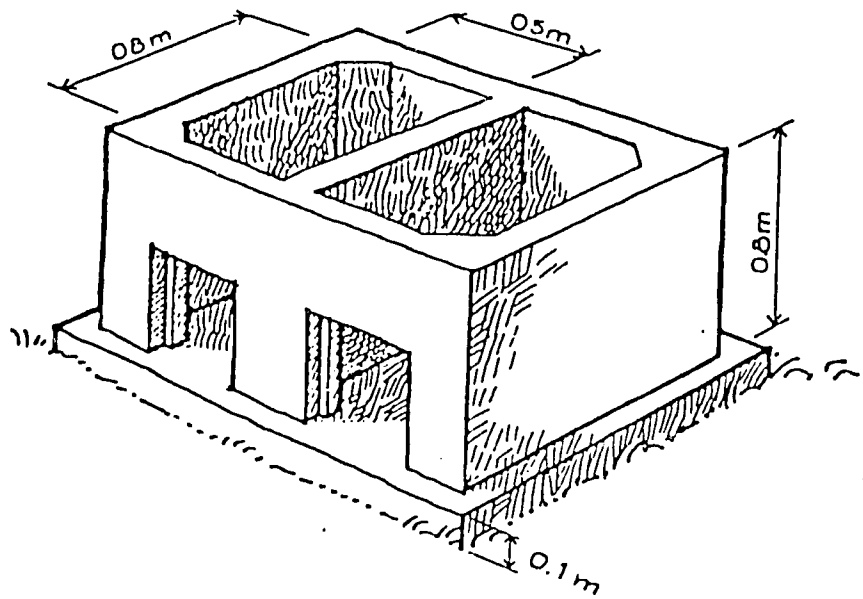
0.8m
0.5m
0.8m
0.1m

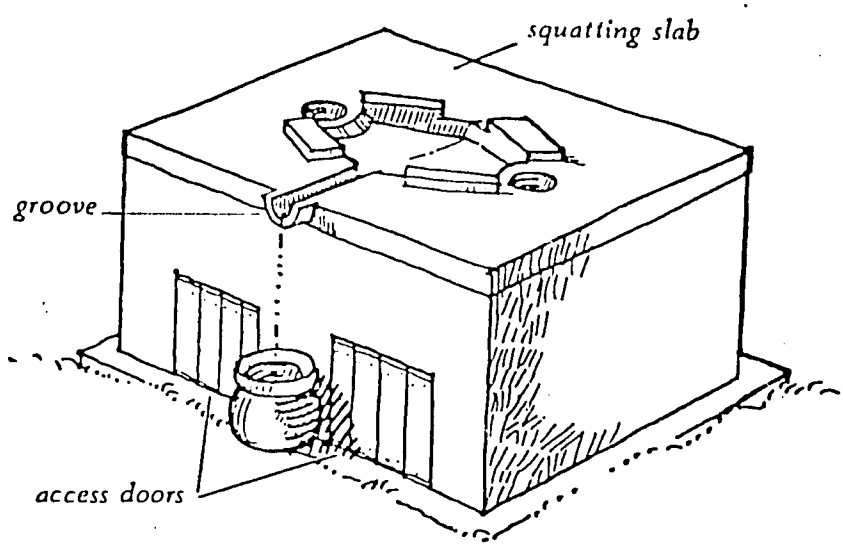
squatting slab
groove
access doors

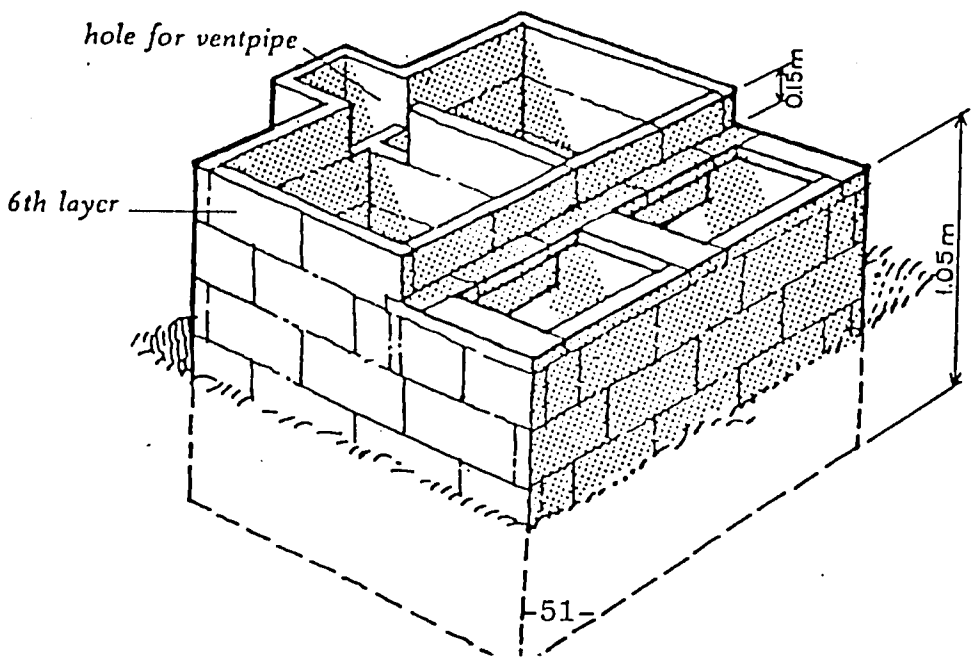
hole for ventpipe
0.15m
6th layer
1.05m

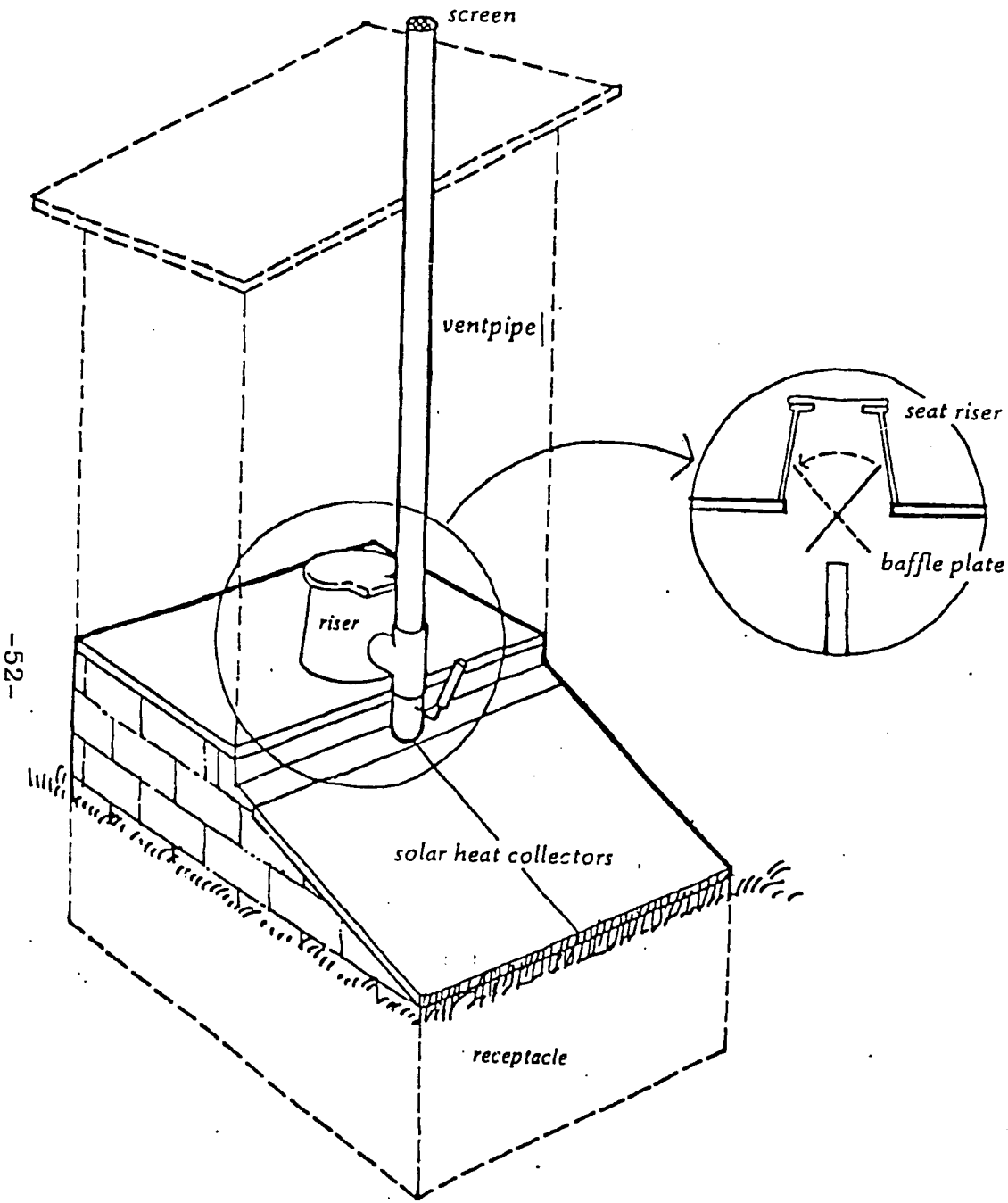
screen
ventpipe
seat riser
baffle plate
riser
solar heat collectors
receptacle

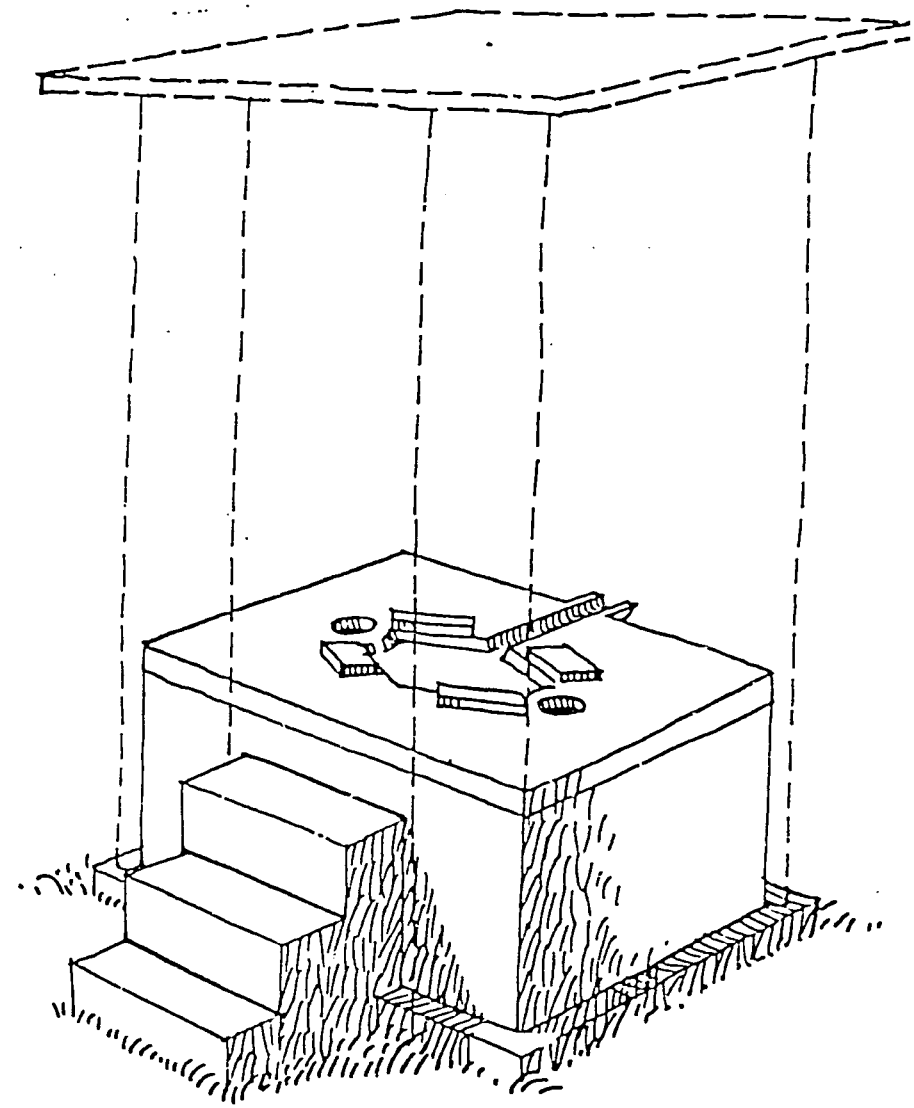

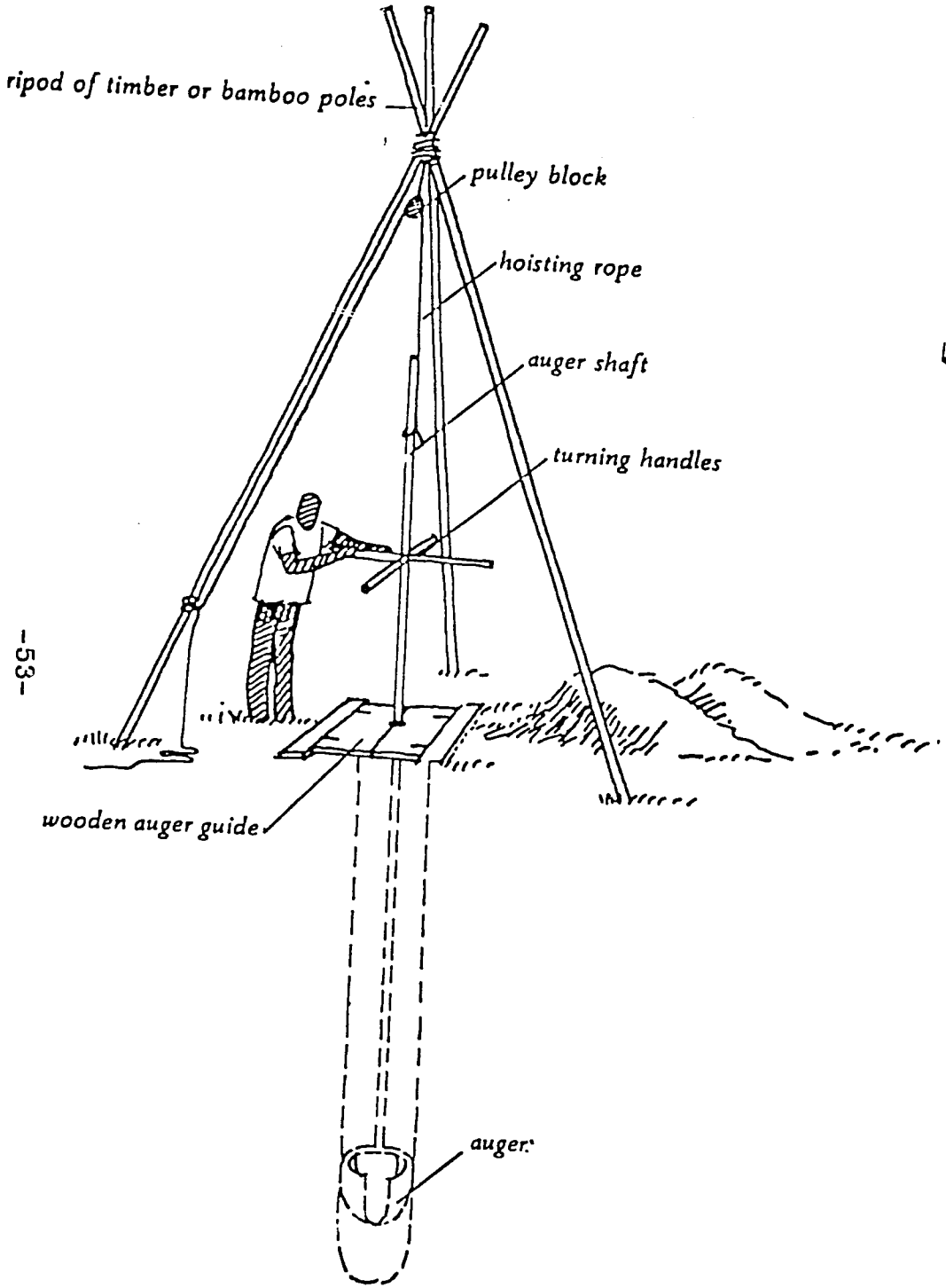
ripod of timber or bamboo poles
pulley block
hoisting rope
auger shaft
turning handles
wooden auger guide
auger

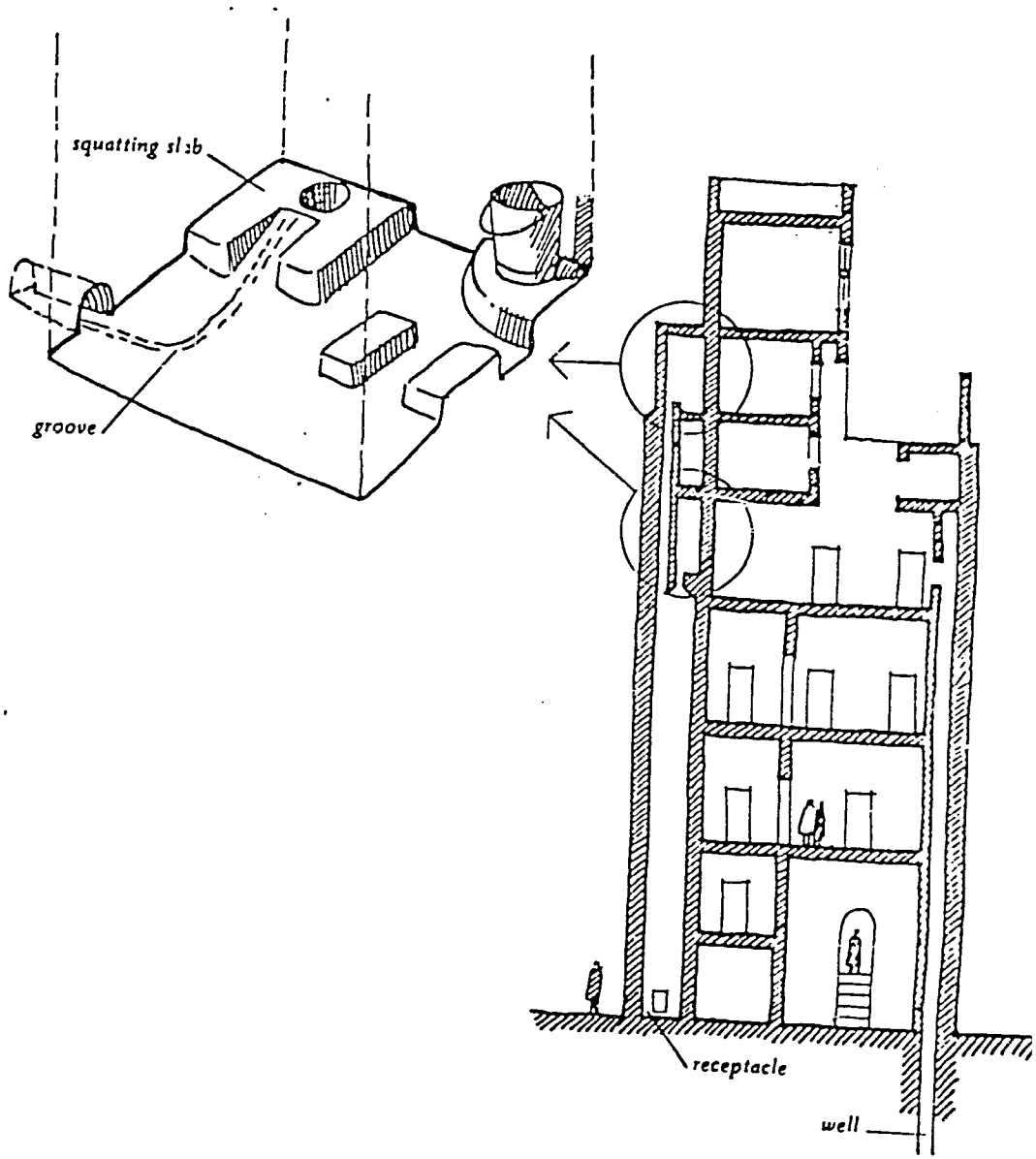
squatting slab
groove
receptacle
well

DOUBLE VAULT COMPOST TOILETS (OUTLINE)

U.S. AID NE/TECH
September 9, 1981
Washington, D.C.

Max Kroschel

I. Why compost toilets?

A. Third World countries simultaneously face:

1. Public health problems and environmental degradation from inadequate or nonexistant sanitation facilities
2. A shortage of fertilizers for agricultural production

B. Compost toilets allow for sanitary collection, storage and treatment of human wastes for reasonably safe utilization as fertilizer

1. Human waste is traditionally used as fertilizer in the Orient; such systems can serve as models
2. The beneficial end product (fertilizer humus) from a compost toilet can act as an incentive for proper use and maintenance of the facility--once the benefits have been demonstrated
   a. any sanitation device requires education in its use
   b. the benefits of "sanitation" as a concept are difficult to communicate to villagers and even more difficult to demontrate
   c. the benefits of using composted human wastes as a fertilizer can be demonstrated in one gardening season

C. The use of human wastes as fertilizer is not traditional in most parts of the world--however:

1. Neither is the use of chemical fertilizers or animal manure composts
2. Neither is latrine use or sanitation practices in general
3. any new idea requires public education-demonstration

D. Vault compost toilets are applicable:

1. In areas of high ground water or seasonal flooding
2. In areas of low density suburban and urban fringe
3. Where municipal collection services can be provided

II. Economic argument for compost toilets

An average person excretes: .15 lb (dry wt) feces/day at 6% N
.15 lb (dry wt) urine/day at 16% N

Total N= .15(.06) + .15(.16)/day = .033 lb N/day/person

Considering that not all a family's feces and urine would be collected and that some nitrogen loss would occur through volitization, a reasonable estimate would be 50% of the total.

Total N/family of 6/yr = .50 (6x365x.033 lb/year) = 36 lb N/year

A 100 lb. sack of amonium sulfate contains approximately 35% N.

A. Country examples

1. Bolivia: Rural population = 3.5 million

100 lb of amonium sulfate costs approximately $20. U.S.

Annual privy fertilizer production potential = 30,000 tons at a retail value of $11.6 million U.S.

The estimated cost of a stabilized adobe double vault privy for a family of six is $40 U.S. Therefore payback is 2 years.

2. Egypt: unserviced rural population = 15 million

100 lb of NH_3SO_4 costs approximately $7 at government subsidized rates and $15 on the open market

Annual fertilizer production potential = 125,000 tons at a retail value of $37,440,000 U.S.

The estimated cost of a double vault privy in rural Egypt is $75 U.S. Therefore the payback is 5 years.

III. Aerobic compost toilet: theory vs. practice

A. Aerobic theory draws on the Chinese experience with large compost piles of night soil and mixed refuse

1. Large piles autoheat for the thermophilic range 55 degrees C - 75 degrees C
2. High temperatures insure pathogen and parasite destruction

B. However compost toilets do not contain large compost piles; the materials are accumulated over an extended period of time and the majority experience indicates that the piles do not autoheat to the thermophilic range

1. Small piles have a small percentage of the mass (the center) that ever reaches thermophilic temperatures
2. The Farallones experience indicates that parasite eggs can survive in small piles even when center temperatures reach 60 degrees C--they survive on the outside layers of the pile (the insulating blanket of compost)

C. Aerobic piles require a C/N ratio close to 30

1. Large quantites (twice to three times the volume of feces and urine) of carbonacious organic material must be added after each use
2. The volume of added material necessitates a larger volume for the privy vault

D. The aerobic process in theory can handle urine which is absorbed by the organic material (the excess liquid is supposed to evaporate). However:

1. Large quantites of urine evaporate and cause
   a. Considerable mal ordors
   b. Flies (reducing sanitary impact)
   c. A less pleasant facility, potentially reduing its use

E. Components of aerobic toilet

1. Double vaults of 1 cubic meter each (or more)
2. Access hatch to each vault - squat plate or seat to each vault, or seat and diversion baffel
3. Urine collector separator OR urine - liquid subdrain OR mixing device to insure redistribution of the accumulated liquid OR solar heating-solar assist for evaporation
4. Exhaust vent stack

IV. Anaerobic system

A. Urine is excluded from the vault

1. It is either collected and used as fertilizer or
2. disposed of via a soakaway

B. Powdered earth or wood ashes are added after each use -- feces are desicated and the pH raised-both are bioantagonistic to pathogenic and parasitic organisms

C. When 3/4 full, the vault is capped off with earth and allowed to ferment anaerobically

Notes:

Vietnamese norm is 45-60 days

A safer period would be 6 months - 1 year

Nitrogen loss would probably be greater over the longer period and pathogen-parasite die off would be more complete

D. The Farallones Institute experience indicates that the anaerobic system is the more easily managed and produces the best results

1. Better stabalized end product
2. Most easily built and managed

E. Component of the anaerobic toilet

1. Double vaults (1/2 cubic meter volume)
2. Access hatch and squat plate or seat for each vault
3. Urine collector or seperator

V. Sanitary Treatment in compost toilets

A. How complete is sanitary treatment?

1. examples:

a. Vietnam anaerobic process reports complete destruction in 45-60 days (tropical conditions)

b. Farallones aerobic process incomplete after 6 months (temperate climate conditions

c. Nicaraguan anaerobic process reports complete treatment after 6 months (tropical conditions)

2. Stabilization is complete after 6 months of aging-however treatment can be assumed to be less than complete, (perhaps 90-95% parasit destruction in 6 months)

(A. How complete is sanitary treatment?)

3. The true question is: what constitutes an adequate and appropriate level of treatment?

B. Removing fresh fecal material from the household environment is the major improvement in sanitation provided by any form of latrine

C. The level of risk involved in exposing agricultural workers to 6 month old composted privy residual is minimal:

1. in comparison to existing absence of sanitation facilities
2. in light of statistics that show parasite infestation of up to 95% of many rural populations

VI. Building Materials

A. Floor

1. Above ground vaults need/are built with durable water tight materials
   a. Concrete
   b. Stone and morter
   c. Brick and morter
   d. Asphalt stabilized compacted soil
2. Below grade vaults can be built with a floor drain to allow liquids to leach down and out
   a. Appropriate if no high ground water or
   b. if there is no seasonally high rain fall

B. Vault walls are of water tight materials
   a. Concrete
   b. Concrete block
   c. Brick and morter
   d. Stone and morter
   e. Stabilized earth block with cement plaster

C. Vault tap (privy floor) is of cast concrete

D. Privy room is of any local building material to afford privacy

E. Vent stack (10 cm I.D. or larger)

1. Materials
   a. Concrete tube
   b. Vitrified clay pipe
   c. Plastic pipe

end

Pit Latrine Emptying

by

David Dalmat

Background

Pit latrines are an effective, safe and low cost method for the disposal of human excreta. The pit latrine is used in situations were the household has no means of connecting to a conventional water carried sewer system (not available or is too expensive to connect), piped water is not available in the house and where cesspools and septic systems are too costly. In the developed world pit latrines are still used in many of the rural areas. Since pit latrines have been used primarilly in the rural areas of the developed world, little attention has been given to methods for emptying pit latrines; the rural area solution has been to dig a new pit and either move the superstructure to the new site or build a new superstructure. Unfortunately in many developing countries where pit latrines are used in villages and urban areas, little if any room exists for relocating or digging a new pit latrine. In these situations, honey dippers have been contracted to manually empty the pit latrine, a practice that is not only very offensive to the honey dipper but to theneighboring houses. This process is both maloderous and unsafe in a public health context. The honey dipper method of emptying a pit latrine is unsuitable.

Because of the reputation of the honey dipper methodology, few urban planners and public health officials would concider the pit latrine as a viable sollution the the sanitation problem in densely populated areas. This attitude created a seemingly unsolveble dilema, in many cases, the densely populated areas were inhabited by the poor. The poor areas are normally not serviced by sewers, no room exists to enable the use of a septic system and the poor are left with a choice of either pit latrines and no system whatsoever. Since the government officials do not view the honey dippers as a safe and accepted practice for the maintenance of the pit latrines, little or no official latrine construction takes place in these areas. The pit latrine is percieved as an appropriate technology on for the rural areas.

Problem

Since the World Bank and many other development agencies are promoting the pit latrine as a suitable method for sanitation in urban areas as well as the rural, a safe, reliable and inexpensive method for the maintenance of the pit latrine needed to be formulated.

Solution

I consulted with several dairy farmers in the Washington, D.C. area to see how these farmers resolved the problem of how to dispose of large amounts of maneur in a safe and economic way. Many of the farms used a liquid waste handling system which used either a vacuum tanker or other type of pumping system to handle the liquid wastes. After talking with these farmers, I decieded to set up an experiment to feild test varrious types of liquid handling equipment

in the Washington, D.C. area. I was able to locate about three thousand latrines that are still being used by families in the tri-county area (Montgomery, Prince Georges and Fairax). The tests were designed to determine both the effectiveness of the different types of liquid waste handling equipment as well as any public health risks that the equipment might pose as a means of spreading aerosolized virus and bacteria to the surroundings.

Only two types of equipment were choosen for the field tests - a vacuum tanker and an air conveyance system. The reason for only choosing these two systems was that my desk studies concluded that diaphram systems and other systems in which the pumped material had to pass through the pump were determined to be unreliable, slow or a constant maintenance problem. Systems whose pumps were upstream of the material to be pumped were more reliable, and were therefore choosen for the study. PaRT of the desk study consisted of interviewing several septic tank emptying contractors, finding out which type of emptying system they used and what was the maintenance requirements.

Over a dozen pit latrines were emptying. It became clear from both the desk studies and the field tests that the vacuum system was effective and economic; the air conveyance system worked well but it is much more expensive and was therefore judged to be unsuited for pit latrine emptying (the manufacturer of the air conveyance system even admitted that the vacuum system was the best chioce). During the field tests, it became obvious that pit latrine constents varried greatly, both in moisture levels and in contents. A simple yet effective system needed to be developed which would enable the vacuum tank operator to empty high moisture contant pits as well as low moisture content ones. The system needed to be able to deal with refuse that would inevitablg find its way into the pit.

Further field tests to perfect the emptying system were conducted. During these experiments a backflushing method for emptying low moisture content pits was devised. The backflushing system also solved the refuse problem in an indirect way. The backflushing systems is as follows:

a) to be used on pit latrines which cannot be easily pumped
b) fill the tank of the vacuum tank system with 200 gallon of water before attempting to empty a dry/low moisture level latrine
c) attach a ball valve six feet from the end of the vacuum hose end
d) using the pressuremode of the vacuum system, flood the the pit using only 3 or 5 psi pressure
e) shut of the water with the ball vaave before the pit floods
f) switch the vacuum system from pressure to vacuum and proceed to pump out the latrine
g) if any refuse is to get clogged in the hose, it will do so on the inlet side of the ball valve
h) shut off the valve and shake the refuse out of the hose
i) if the refuse is lodged in the hose, diconnect the valve using the quick connect, and remove the refuse with a stick or other suitable instument
j) if necessary the above steps can be repeated until the pit is empty.

The Foundation for Cooperative Housing heard about the work I was doing on pit latrine emptying and asked me to go to Haiti to advise them on a suitable method for emptying the semi-privatelatrines which were being constucted at the Office National du Logement/FCH sites and services project at Saint Martin. After inspecting the semi-private latrines in Haiti, I determined that the system that had been used in the Washington area would be compatable,needing only a few minor adjustments. Instead of using a truck mounted tank, a trailer unit pulled by a farm tractor was recomended. This system is more manuverable and is also more economical to both purchase and to operate. One interesting observation was that there appeared to be very little refuse thrown into the pit latrines thus making the emptying process much easier. The refuse has a high reuse value and is therefore not wasted by throughing it into the pit latrine.

After seeing that the latrines could be emptied using the vacuum tank system, it was necessary to find a safe and sanitary system for the treatment or disposal of the collected pit latrine waste. Fortunately, a municiple refuse composting plant was in opperation in Port-au-Prince. The compost being produced by the plant was low in nitrogen and needed to be enriched. The introduction of the pit latrine waste into the composting process would both enrich the compost to a level suitable for agronomic use and was a safe and suitable way of disposing of the latrine waste.

Figure 11–5. Beltsville Agricultural Research Center (BARC) System for High-rate Thermophilic Composting (millimeters)

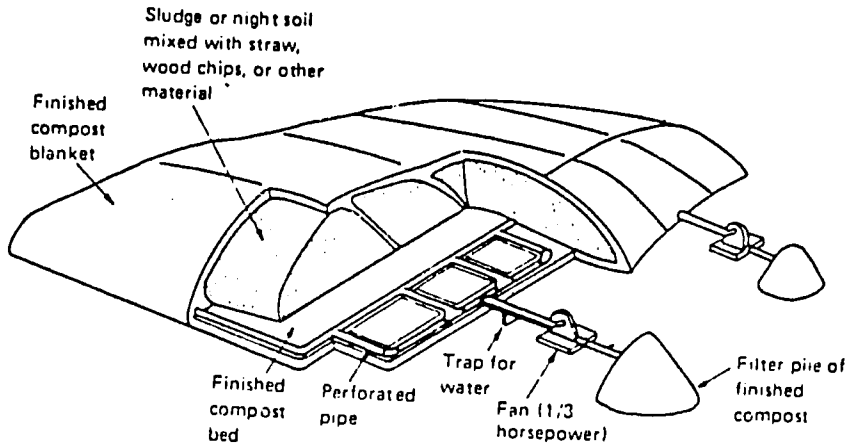

Composting extended piles with forced aeration

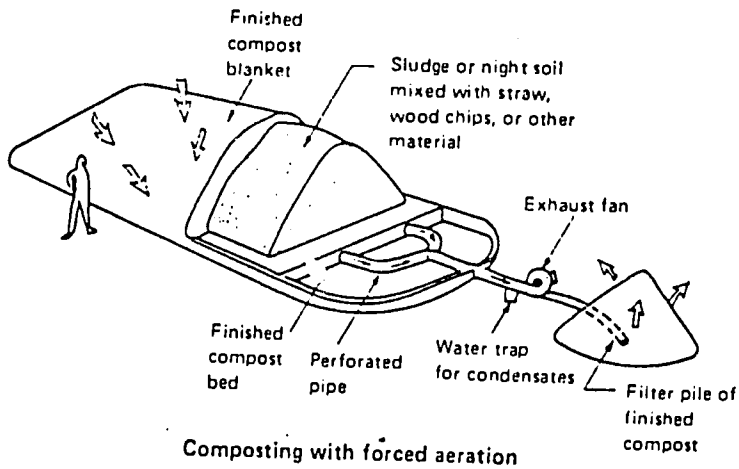

Composting with forced aeration

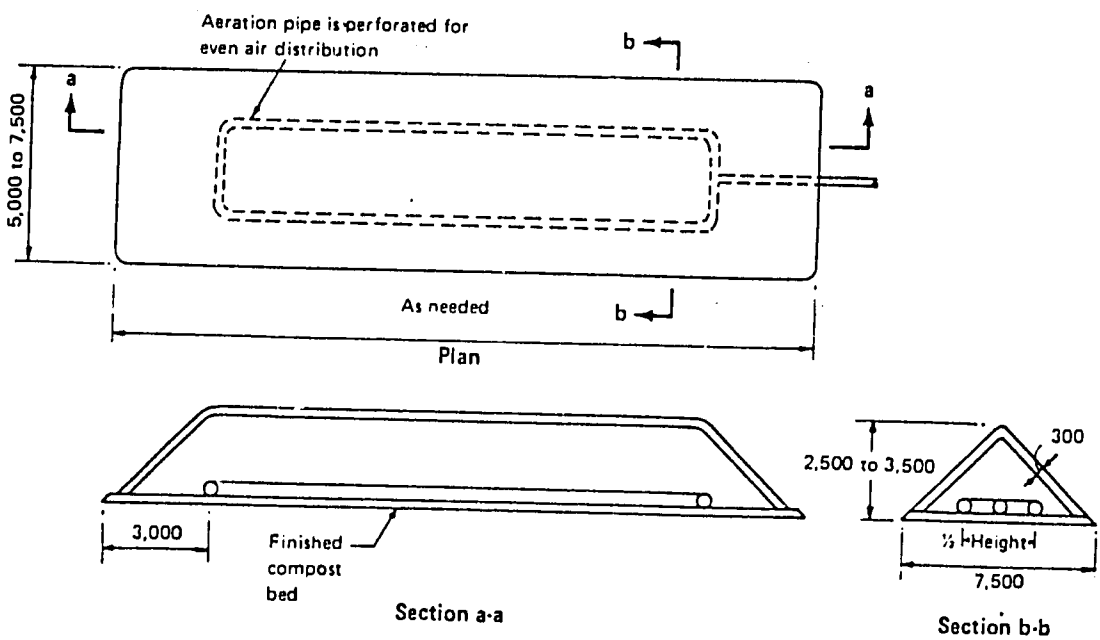

Schematic

Figure 9 1 Influence of Time and Temperature on Selected Pathogens in Night Soil and Sludge

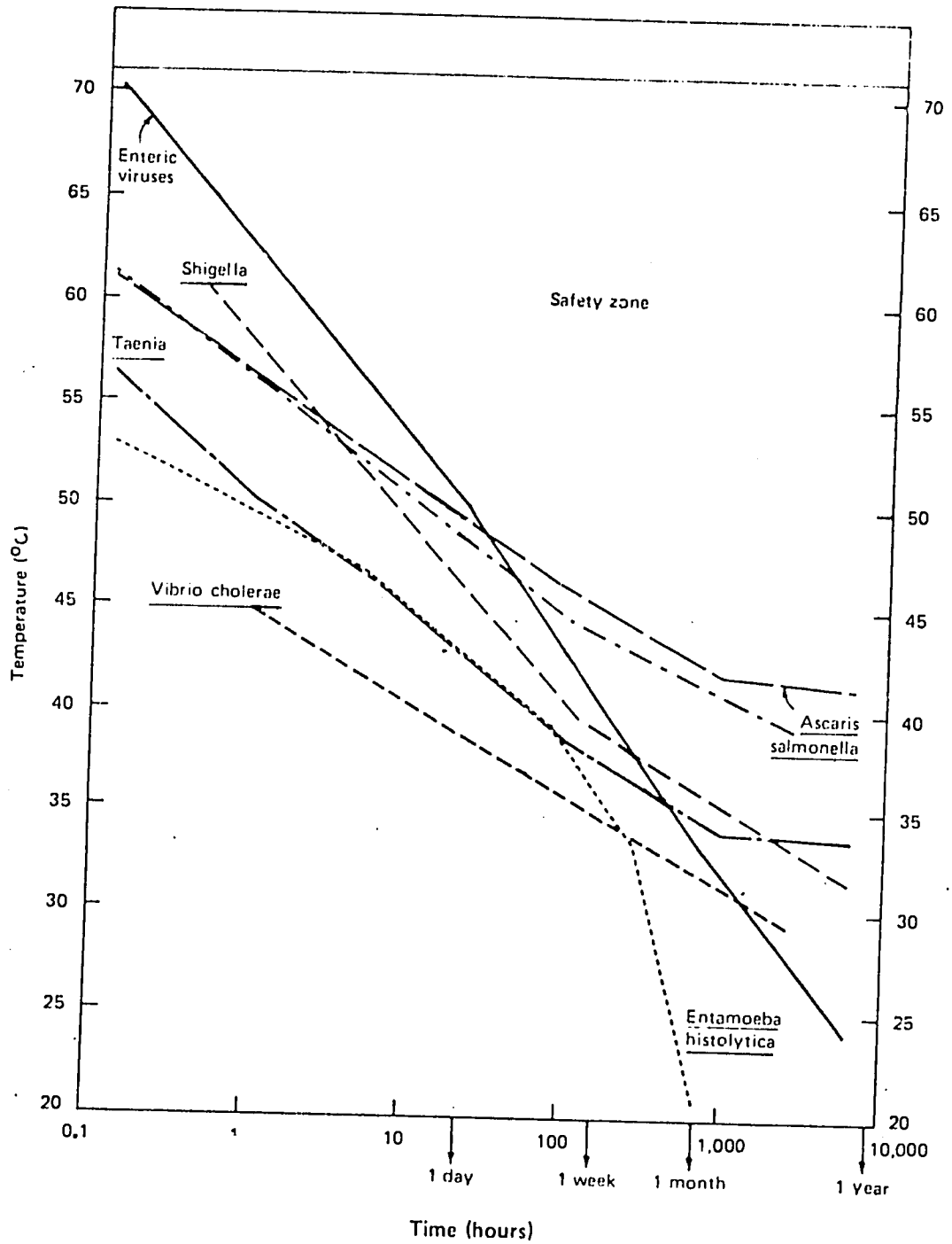

Note: The line represents conservative upper boundaries for pathogen death--that is, estimates of the time-temperature combinations required for pathogen inactivation. A treatment process with time-temperature effects falling within the "safety zone" should be lethal to all excreted pathogens (with the possible exception of hepatitis A virus--not included in the enteric viruses in the figure--at short retention times). Indicated time-temperature requirements are at least: 1 hour at ≥62°C, 1 day at ≥50°C, and 1 week at ≥46°C.

Source: Feachem and others, Sanitation and Disease.