PN-AAT-483

ISN 41504

MOH/UNDP/WHO/UNICEF

INTERNATIONAL DRINKING WATER SUPPLY AND SANITATION DECADE

SECOND NATIONAL CONFERENCE – EGYPT

SECTOR PROGRESS AND NEEDS

Alexandria 16-18 April 1985

2-1

PAPERS PRESENTED AT THE SECOND IDWSSD CONFERENCE

HELD AT WORLD HEALTH ORGANIZATION,

EASTERN MEDITERRANEAN REGIONAL OFFICE

ALEXANDRIA, EGYPT

APRIL 16-18, 1985

BOOK II: WEDNESDAY, APRIL 17, 1985

2630021

THE PROVINCIAL AND RURAL SITUATION, MANPOWER DEVELOPMENT AND TRAINING, AND NATIONAL INVESTMENT PLANS AND BUDGETARY ARRANGEMENTS

TABLE OF CONTENTS (II)

THE PROVINCIAL AND RURAL SITUATION

ORDEV's Role in Promoting Local Participation in Creating Basic Services of Water and Sanitation in the Egyptian Village	Dr. Ahmed Rashid
Water and Sanitation Progress in Beheira 1981-85, Prospects and Plans for 1985-1990	H.E. Governor Labib Zamzam
Water and Sanitation Progress in Minia 1981-35, Prospects and Plans for 1985-1990	Dr. Safwat Abdou
Water and Sanitation Progress in Damietta 1981-85, Prospects and Plans for 1985-1990	Dr. Anwar El Folaly
General Discussion on the Role of Water Companies	All Participants
Low-Cost Technology for Rural Sanitation	Mr. Maurice Porter
Appropriate Technology for Drinking Water Supplies to Rural Communities	Mr. Vladimir Paniche
Women's Participation in Water and Sanitation Projects	Miss Timpson
The Basic Village Services Programme	Mr. Douglas Tinsler

MANPOWER DEVELOPMENT AND TRAINING

Manpower Requirements--Progress and Training Needs for Greater Cairo Water Authority	Gen. Eng. Kamal El Din Hegab
Manpower and Training Issues in Meeting the Goals of the IDWSSD	Prof. Hassan Mitwally
The National Scene for Manpower and Training	Mr. Flemming Heegaard
The World Bank--Discussion on Manpower and Training Issues	Mr. Chittleburgh

TABLE OF CONTENTS (II)

Continued

NATIONAL INVESTMENT PLANS AND BUDGETARY ARRANGEMENTS

Resources and Investment Made During the IDWSSD within the Current National Plan: Trends in National and Foreign Participation and Contribution — Dr. Ragaa Abd Elrasoul

Operational and Financial Planning for the Sector — Mr. Michael Croston

MINISTRY OF HEALTH
ARAB REPUBLIC OF EGYPT

EASTERN MEDITERRANEAN REGIONAL OFFICE
WORLD HEALTH ORGANIZATION (EMRO/WHO)

UNITED NATIONS DEVELOPMENT PROGRAMME
EGYPT (UNDP) (UNICEF)

Second National Conference
on the
Sector Progress and Needs
of the
International Drinking Water Supply
and Sanitation Decade (IDWSSD) in Egypt

16-18 April 1985

ORDEV'S ROLE IN PROMOTING LOCAL PARTICIPATION IN CREATING BASIC SERVICES OF WATER, ROADS AND SANITATION IN THE EGYPTIAN VILLAGES

By

DR. AHMED RASHID
DEPUTY MINISTER

Organization for Reconstruction and Development
of the Egyptian Village (ORDEV)
Ministry of Local Government
Cairo

5

Introduction

Local development implies the combination of the efforts of the government and the people to improve the economic, social and cultural life at the local and rural level.

ORDEV has adopted a comprehensive development programme which encompasses various economic and social aspects which should result in achieving the required change in Egyptian villages. This local government development effort emphasizes that people should govern themselves through the organization of local participation. Therefore, the ORDEV strategy is based on the following points:

1. Implementing the decentralization system through the enhancement and support of local and national organizations.

2. Achieving comprehensive and balanced development in a scientific context.

3. Changing the Egyptian village to a center of production.

4. Concentrating on the importance of local participation as follows:

   a. Making local decisions for local development programmes.

   b. Financing project costs either by local effort, money or both.

   c. Reaping benefits from the income of the projects, where this is available.

5. Increasing the planning, technical and administrative ability of the labor force.

This paper presents the role of ORDEV in activating the local participation using the BVS programme in the Egyptian villages by means of the Agreements signed with the U. S. Agency for International Development and by the Agreement signed with UNICEF.

The Evolution of the Basic Services Agreement (BVS)

The basic services programme (BVS) for the villages started in the year 1979 by the signing of the first agreement between the Government of Egypt (represented by ORDEV) and the Government of the United States (represented by the U. S. Agency for International Development). USAID provided LE 75,000,000 during the first 5 years, aiming to:

- Improve the ability of the local units in the villages over the governorate to plan, administer, finance, execute and maintain essential service projects which had been selected by the village councils.

6

- Subsidize and support the decentralization policy that the Egyptian government is following with the local government system. The Egyptian government contributes the necessary labor for the agreement activities. It also pays construction costs which exceed the allowed balance of the project. In addition the government contributes 10% for maintenance.

- During the execution of the first year's projects, the agreement was modified more than once, as follows:

  Year 1980: the fund increased by US$ 70 million.
  Year 1982: the fund increased by US$ 75 million.
  Year 1984: the fund increased by US$ 62 million.

  So the total fund that was allowed by the agreement from 1979 till now is US$ 282 million, of which US$ 16 million is for technical assistance and US$ 266 million is for projects in the governorates.

Administration and Execution of the Agreement

An essential services committee is responsible for the administration and execution of the agreement. This consists of the following Ministry representatives: Planning and International COoperation, Finance, Housing, Agriculture, local government, as well as representatives from census and statistics, Ministry of Social Affairs, Ministry of Health, Ministry of Irrigation and other special agencies in this field.

This committee made the criteria for selection of the governorates that join the BVS programme. Also, it decided the general policy for achieving the execution of the agreement and took responsibility for the advancement of the programme.

The distribution and specification of the investment funds of the projects and the plans of the projects are presented by the governorates to the committee. The execution of the agreement is by the distribution in the governorates over the years of the programme as follows: rural governorates LE 3.45 million yearly and desert governorates LE 1.5 million yearly for three years.

In the first year (1980/81) the agreement started implementation in 3 governorates: Sharkeya, Fayum and Sohag. A number of needs were decided by the committee, like the lack of drinking water, illiteracy and infant mortality.

Six new governorates were included in the second year (1981/82): Qalubeya, Menufaya, Beheira, Giza, Minia and Qena in addition to the governorates of the first year.

During the third year (1982/83) 11 governorates were included in the agreement to make a total of 20 governorates in the BVS programme. These governorates were completed in the year 1984/85.

North Sinai was added in the year 1983/84 and South Sinai in the year 1984/85. These two will be completed during the year 1985/86. Table 1 shows the distribution of the governorates over the years of the programme and the specified funds for each governorate.

The BVS programme includes a number of different projects that were decided on by the committee:

1. Potable water projects including the construction of new wells and water reservoirs, electric and diesel pumps and motors, in addition to the execution of drinking water distribution networks in the villages.

2. Preparation and paving roads.

3. Other projects, e.g.:
   a) mall bridges
   b) motorized ferry boats
   c) telephone and telegramme offices
   d) public toilets
   e) sanitary drainage

Table 2 shows the different projects of the programme over the years 1980-1985 and the fund percentage of each project.

Follow-up on the Projects under the Agreement

ORDEV is following up through, its technical departments, the execution of the projects that were decided on by the Committee. Reports will be prepared and presented to the Ministry of Planning and USAID. Besides that, after the request of the local peoples' assemblies, the committee will modify the projects according to the needs and the experience gained from projects already completed. Table 3 shows the execution situation of the projects till December 31, 1984.

These groups included 96 participants and represented different standards who work in planning, execution and administration of the projects. Table 4 shows the training programmes which have been executed and the types of trainees who attended these programmes.

Training

During the first year the projects faced many difficulties in finding technical workers trained in operating and maintaining the small water plants and pipe nets. We noticed that there were a great number of graduates from industrial institutes. These are considered surplus because there is no job for their different specializations in the villages and Marakaz. That is why it was necessary to have training courses for these workers to improve the standard of the maintenance and operating workers

8

who are available. So, when trained, these workers can become useful in the villages in operating and maintaining the projects.

The number of training programmes executed was 16. This included 308 training courses attended by 59,932 trainees from different localities. Besides the local training, 4 groups went to the United States for training. These groups included 96 participants and represented different standards who work in planning, execution and administration of the projects. Table 4 shows the training programmes which have been executed and the types of trainees who attended these programmes.

Technical Assistance

Since the funds of the agreement is a source to finance the BVS project, the existence of a consulting firm was felt to be necessary to make better use of these funds by providing technical advice and preparing the training manuals. The American firm, Chemonics, was chosen to present services to the government in the following fields: Administration of Local Government; Planning and Programming; Finance; Engineering; Environmental Protection; and, Training.

The consulting firm helped the rural local units and the governorates. For example, the firm prepared Arabic language technical manuals in the following fields: Road design; Sanitary drainage in villages; Planning and administration of projects; Maintenance; and others. In addition they studied the problem of the high groundwater table in some governorates of the Delta and prepared studies on sanitary drainage and maintenance systems.

While executing the drinking water projects, some side effects of water projects, high groundwater table and sanitary problems were found. The firm prepared a study and project on the high water table which is being executed in Shayba El Nakareya village in Sharkeya Governorate. Six models of sanitary drainage are being implemented under circumstances of the Egyptian village.

Information System

A programme was prepared to develop an information system in all rural local units which would use computers to help in making decisions at the exact time and training in the villages, Marakaz and governorates of El Ghorbeya, Minia, Dakeliya and Assuit which have already been given and installed mini-computers. At the end of this year 12 governorates will have received mini-computers.

Evaluation of the Agreement and its Achievements in Three Governorates (Sharkeya, Fayum and Sohag)

The evaluation of the programme is part of the agreement and includes:

- Evaluating how far the goals of the programme have been achieved.
- Pointing out the problems that prevent the achievement of the goals.
- Point out how to use information to overcome these problems.

Impact of BVS on the Villages

1. The implementation of small projects for services and consumption.
2. The encouragement of people to enter the field of construction.
3. The construction of road projects improved economic activities.
4. Activation of the local organizations and support of the decentralization by strengthened rural units and local people's assemblies (councils) in planning and construction of projects.
5. Increase in the local sharing in the construction of the projects.
6. Demonstration of the importance and necessity of the training to increase the ability of the workers.
7. Recognition of the necessity of developing accounting units at the level of the rural and local units which could support decentralization.

The UNICEF Agreement

It was agreed that UNICEF will contribute in the execution of some projects to improve the level of services to support the local government system in rural areas in five administrative districts in Assuit, Sohag, Qena and Aswan Governorates. The organization allocated US$ 6,000,000 for drinking water projects to the villages in these governorates during the period 1983-85. Table 5 shows the achievements of the authority in the governorates.

New Indicators

Since basic services are considered the first foundation to development plans with its diverse implications, ORDEV has given

10

much importance to these projects whether financed locally or internationally.

To assure the greater output for these projects in assessing development ORDEV in assistance with governorates and scientific authorities try to:

1. Formulate legal and economic forums through which citizens can participate in execution and the operation of BVS projects.

2. Interest in establishing or supporting maintenance.

3. Establishing a clear role in local contribution either in taking decisions or in financing or executing the projects.

4. Continuity in supporting the technical and administrative abilities in the villages by training programs.

5. Confirming the necessity of constructing accounting units in the rural and local units supporting decentralization.

6. Preparing a study on the influence of the BVS projects:

   a) Immigration to and from the villages.
   b) Achievements of road projects in increasing the agricultural production.
   c) The social change.

7. The linkage with the national and governorate plans and scientific and research organizations.

On the basis of these new guidelines the board of basic services has agreed on standardization of credit distribution when reforming the Agreement.

1. The percentage of the projects' execution through the last few years:

Year	Execution Percentage
1980/81	100%
1981/82	100%
1982/83	90%
1983/84	80%
1984/85	25%

2. The governorate and the local units should make final accounts of completed projects with 100% rate.

3. The governorate should have distributed the maintenance credit during the tree years over the rural units.

4. The rural and local units and the governorate is requested in sharing by 15% of the projects' costs.

5. The local and rural units and the governorate should arrange a rate of 10% of the value of the project's credit that is approved and this rate is devoted to project maintenance.

6. The governorate should establish information units at the level of the rural and local units to support decision making at the local level.

Table 1

Governorates' Distribution over the Years of Basic Village Services' Approved Funds

(value in millions)

Governorate \ Year	80/81	81/82	82/83	83/84	84/85	85/86	Total
Ismailia	-	-	1.500	1.500	1.500	-	4.500
Qaluibeya	-	3.450	3.450	3.450	-	-	10.350
Sharkeya	3.368	3.450	3.450	0.057	0.175	-	10,500
Dakhaliya	-	-	3.450	3.450	3.450	-	10.350
Damietta	-	-	3.450	3.450	3.450	-	10.350
Menufiya	-	3.450	3.450	3.450	-	-	10.350
Gharbeya	-	-	3.450	3.450	3.450	-	10.350
Kafr El Sheikh	-	-	3.450	3.450	3.450	-	10.350
Beheira	-	3.450	3.450	3.450	0.140	-	10.490
Giza	-	3.450	3.450	3.450	-	-	10.350
Fayum	2.989	3.450	3.450	-	-	-	9.889
Beni Suef	-	-	3.450	3.450	3.450	-	10.350
Minia	-	3.450	3.450	3.450	-	-	10.350
Assuit	-	-	3.450	3.450	3.450	-	10.350
Sohag	3.481	3.450	3.450	-	-	-	10.381
Qena	-	3.450	3.450	3.450	-	-	10.350
Aswan	-	-	3.450	3.450	3.450	-	10.350
Matrouh	-	-	1.770	1.500	1.500	-	4.770
Red Sea	-	-	1.500	1.500	1.500		4.500
New Valley	-	-	1.500	1.500	1.500	-	4.500
N. Sinai	-	-	-	1.229	3.450	5.671	10.350
S. Sinai	-	-	-	-	3.450	6.900	10.350
Total	9.838	31.050	61.470	52.136	37.365	12.571	204.430

Table 2

Distribution of Programme Projects over the Years and the Percentage of Each Project

Project	Drinking Water			Roads			Others			
Year	No.	Fund	%	No.	Fund	%	No.	Fund	%	Total
80/81	105	5496454	56	52	3177341	32	51	1164444	12	9838330
81/82	429	19465255	63	276	8869352	29	133	2535423	8	31050000
82/83	616	32069104	52	406	19356992	31	417	10043904	17	61470000
83/84	435	20194573	39	302	17308019	33	222	14633408	18	52136000
84/85	292	14945146	40	194	13366517	36	258	9053337	24	37365000
Total	1877	92350593	48	1230	62078221	32	1081	37430516	20	191859330

Table 3

Implementation of the BVS Projects up to 31 December 1984

Year	The Availability of Financing	Expenditure		Investment		Implementation Execution		
		Value	%	Value	%	On-going	completed	Total
80/81	9838330	9838330	100	9838330	100	-	208	208
81/82	31050000	30395087	98	30412920	98	57	782	839
82/83	61470000	51879286	87	51100220	85	644	787	1431
83/84	50308827	23730175	47	24092006	48	888	295	1183
84/85	37365000	1702867	5	529867	1	742	2	744
Total	190032157	117545745	62	115973343	61	2331	2073	4405

13

Table 4

Implemented Training Programmes and the Number of Trainees

	Programme	Number of Courses	Number of Trainees
1.	Water pumps maintenance (worker)	79	1384
2.	Water pumps maintenance (technicians)	47	959
3.	" " " (engineers)	21	289
4.	Roads maintenance (technicians)	15	283
5.	Trainer preparation	6	156
6.	Financial activities & accounting	40	876
7.	Workshops on planning & project administration	26	1571
8.	Drainage & treatment of water table	6	124
9.	Use of plastic pipes	7	203
10.	Following up of the projects	5	157
11.		6	191
12.	Information systems (governorate)	39	1347
13.	" " (rural)	-	51814
14.	Workshop on problems of BVS projects	8	406
15.	Maintenance of projects	1	35
16.		2	137
	Total	308	59932

Table 5

Achievement of UNICEF in Upper Egypt

No. of Projects / Governorate	Water Wells	Water Reservoir	Water Pumps	Water Nets	Public Water Taps	Sanitary Toilets
Assuit	6	4	65	-	-	-
Sohag	5	2	-	18	-	-
Qena	1	1	1	1	5	325
Aswan	9	5	5	-	-	500
Total	21	12	71	19	5	825

14

MINISTRY OF HEALTH
ARAB REPUBLIC OF EGYPT

EASTERN MEDITERRANEAN REGIONAL OFFICE
WORLD HEALTH ORGANIZATION (EMRO/WHO)

UNITED NATIONS DEVELOPMENT PROGRAMME
EGYPT (UNDP) (UNICEF)

Second National Conference
on the
Sector Progress and Needs
of the
International Drinking Water Supply
and Sanitation Decade (IDWSSD) in Egypt

16-18 April 1985

WATER AND SANITATION PROGRESS IN BEHEIRA 1981-1985, PROSPECTS AND PLANS FOR 1985-1990

By

H. E. GOVERNOR LABIB ZAMZAM
Beheira Governorate

.5

THE BEHEIRA WATER SUPPLY PROJECT

1. Introduction

The Beheira Water Company (BWC) was established on 28 March 1981 by Governatorial Decree as a public company in accordance with Law No. 60 of 1971 (as amended by Law No. 111 of 1985) and came into being on 1 July 1981. The Company has now taken over all projects for public water supply within the Governorate apart from a few small projects for which the legal processes are not yet complete. Details of the present water resources of the Company are given in Appendix A.

2. Level of Service

The area served by the BWC covers about 10,000 sq km bounded by the Rosetta branch of the Nile, the Mediterranean and Alexandria, and the western desert, while to the south the Governorate extends in a narrow strip on the west branch of the Nile to within 50km of Cairo. The present population is estimated at 3.1 million and is expected to increase 4.5 million by the year 2000 but only about 80% of the present population is receiving a water supply provided by BWC. With a total output of less than 200,000 cu.m a day from all existing resources including additional supplies purchased from Alexandria Water Authority, water production is equivalent to an overall average of about 80 litres per capita per day (l.c.d) but due to the high losses in the distribution system it is considered that the amount actually consumed may be only an average of 35 l.c.d.

With about 850,000 persons living in urban communities where a high proportion of consumers have individual house connections and 2,250,000 in rural areas where supply is predominantly from public standpipes there is of course a wide variation of individual levels of consumption, but it is clear that the level of service provided at present is unacceptable.

The water supply systems taken over by BWC were already known to be defective in many respects including:

- Poorly maintained treatment plants due to:
  - poor initial construction
  - difficulties in obtaining spare parts
  - shortages of skilled mechanics to carry out maintenance
- Poor quality of water produced due to:
  - design faults in existing works
  - overloading of treatment works to produce more water than the design capacity
  - shortages of chemicals

16

- High losses in the distribution system due to:
  - inadequate maintenance of buried pipelines
  - inadequate maintenance of standpipes

3. Inception of the Project

Because of the importance of the Governorate and the level of service provided, the improvement of the water supply services in the Beheira Governorate was given top priority by the General Organization of Potable Water (GOPW) following studies of the requirements of all Governorates carried out during 1979 and 1980. This priority was confirmed by the World Bank who have entered into a Development Credit Agreement with the GOPW, and its successor, the National Organization for Potable Water and Sanitary Drainage (NOPWASD) to provide the foreign currency required for the implementation of the Beheira Water Supply Project while the local costs of the project are funded by the central government. Because of the extent of the work which would be necessary and the time needed for its execution, which would have exceeded the period for which the Bank is prepared to grant credit, the present project does not aim to provide a full supply of potable water to all potential consumers within the Governorate. Within the scope of the present project as approved by the Bank, however, it is anticipated that the percentage of the population served will increase from 80% to 90% with a significant improvement in the level of service provided to these consumers both in quality and quantity.

The parts of the project with direct impact on the consumer are:

- rehabilitation of existing treatment works
- expansion of treatment resources
- rehabilitation of boreholes and associated works
- rehabilitation of existing distribution systems
- reinforcing the existing distribution systems
- provision of treated water storage and pumping

In addition the project also includes the provision of administrative facilities for BWC to enable it to improve both financial and maintenance policies and the provision of training facilities at Damanhur which are intended to be operated on a regional basis to serve a wider area than just Beheira.

4. Existing Treatment Works

The BWC is responsible for the operation of treatment plants shown in Appendix A of which three have been commissioned within the last ten years. Two of the three, at Kafr El Dauwar (new plant) and Shubra Khit, have been commissioned within the last four years and are not in need of rehabilitation, although new facilities for disinfection by chlorine dosing are being provided at Shubra Khit. It is the intention of NOPWASD to have the required rehabilitation of the plant installed at Damanhur No. 3

17

Works carried out by the original manufacturer under a separate agreement, but new facilities for disinfection are also being provided under the project.

The remaining treatment works are currently being rehabilitated under the project to ensure that each works will be capable of producing potable water of a satisfactory quality. It is however the intention that the work at Buseili, Kafr El Dauwar (Old Works), Damanhur (Nos 1 and 2), Mahmoudiya (Nos 1 and 2) and Idfina shall all be closed down on completion of the project so that the rehabilitation is limited to the minimum necessary to ensure that operation of the works can continue safely for a few years only and that the water delivered to supply is adequately disinfected. The biggest existing BWC treatment works at Abo Hommos is now undergoing major rehabilitation which includes reconstruction of the existing filters in addition to improvements to chemical dosing facilities, raw water distribution between the clarifies and clarifier desludging. A new plant is to be installed at Kom Hamada to supplement the existing iron and manganese removal plant and to provide disinfection in order to improve the quality of water delivered to supply.

5. Expansion of Treatment Resources

Under the project the existing treatment works at Damanhour (No.3) and Kafr El Dauwar (New) are being extended to double the original design outputs thus providing an additional 17,280 cu.m/day from each works by the installation of additional clarification and filtration facilities. At Damanhur (No. 3) a new disinfection plant is also being installed. Work under the contract for these extensions is now progress but is proceeding slowly.

Additionally four new treatment works are to be built, each of which is designed to permit future extension by 50%.

	Initial output in cu.u per day	
Damanhur	51,840	(600 l/s)
Kafr El Dauwar	43,200	(500 l/s)
Idfina	43,200	(500 l/s)
Nubariya	34,560	(400 l/s)

The new works at Kafr El Dauwar will be located adjacent to the existing Kafr El Dauwar works. The other works are to be located on new sites. The award of the contracts for the construction of these new treatment works is expected to be announced in the near future.

6. Rehabilitation of Boreholes and Associated Works

There are at present 87 locations where there are boreholes for which BWC is responsible and at 75 of these locations there are elevated storage reservoirs.

18

Under the project new boreholes and elevated storage are to be constructed at fifteen of these locations while at one further location new boreholes only are to be constructed.

New boreholes and elevated storage will also be constructed at two new locations. The installations at the other 73 existing locations are all to be rehabilitated and chlorination facilities for disinfection of all borehole supplies are also being installed.

The contract for the construction of the new boreholes and elevated reservoirs has recently been awarded and preliminary work is in progress while the contract for rehabilitation is expected to be awarded in the near future. The contract for construction of the buildings in which the chlorination equipment is to be installed is about 25% complete and the chlorination equipment is in store awaiting erection.

7. Rehabilitation of Existing Distribution Systems

The existing distribution system is believed to include about 1500 km of pipelines, of which only about 10% is larger than 300 diameter, with some 80,000 private connections and nearly 5000 public standpipes. The pipelines are known to be in a bad condition and tests carried out in 1979 demonstrated a leakage rate of 70%. There are several contributing factors to such an excessive figure:

- The pipes are often laid in roads alongside canals and drains over the years the road embankment has been eroded leaving the pipes with very little protection or support.
- The pipes have often been laid with inadequate protection in the first place and increasing traffic has led to damage particularly with asbestos cement pipes.
- Some of the pipelines are over seventy years old (although the older pipes are usually cast iron which tend to have fewer leaks than the newer asbestos cement).
- Broken taps on standpipes and lack of maintenance in the past.

The excessive leakage has also resulted in many areas at the ends of pipelines being permanently without water although they have standpipes and in some cases also domestic connections.

Under the project the distribution networks in eight of the thirteen markazes and in the two major towns are to be rehabilitated with a target of reducing leakage to 30% in these areas. Whilst this may also appear high it is more accurately referred to as "unaccounted for water" and includes inevitable discrepancies resulting from metering inaccuracies, and in many instances, unauthorised connections, as well as true leakage. It would

19

be theoretically possible to reduce the figure to well below 30% but there is a point at which the cost of tracing and repairing leaks becomes uneconomic in relation to the value of the water saved even allowing for the capital cost of the additional treatment and distribution works needed to provide the "unaccounted for water". In an urban area a figure of 20-25% is usually considered acceptable but a higher figure is appropriate in rural areas where the ratios of total pipe length to number of consumers or to quantity of water supplied are higher. In Beheira the location of many pipelines adjacent to canals or drains tends to increase leakage and also increases the difficulty of tracing it. It is interesting to note that 2000 years ago the Water Commissioner to the City of Rome, Sextus Julius Frintinus, faced the same problem when he found that transmission losses on one aqueduct were over 60% although the major cause of this appears to have been unauthorised connections.

Whilst checking domestic connections for leakage the opportunity is also being taken to replace faulty water meters which are expected to be a high proportion of the total number installed. Meters are also being installed at all public standpipes to enable charges to be made for these supplies.

Work under the first rehabilitation contract is now progressing well and a number of ezbahs which have had no water supply for a number of years are now receiving supplies again with no increase in the quantity of water produced at the treatment works. There has also been a general increase in the supply pressure as a result of the remedial work carried out to date. The award of a second network rehabilitation contract is imminent and tenders are being evaluated for the third.

8. Reinforcing the Existing Distribution System

As already stated, the new production capacity to be constructed under the project totals over 200,000 cu.m per day although the net increase in output will be less than this when allowance is made for the overloading at some existing works and for the works which are to be shut down when the new works are commissioned. This means however that existing capacity will be nearly doubled and the existing distribution systems must therefore be reinforced to enable the additional supplies to be distributed to the consumers. About 250 km of new pipes are to be laid in diameters from 100 to 700 mm. Separate contracts were awarded for the supply of pipes and fittings larger than 400 dia and for valves to enble pipelaying contractors to make an early start without being delayed while waiting for deliveries, but the supply of smaller pipes is included in the pipelaying contracts. For all contracts tenderers were given the option of offering the most economical type of pipe material and it may be noted that for the supply contract for larger diameter pipes and for four of the five pipelaying contracts, ductile iron pipes have been found to be the most economical.

20

Three of the five pipelaying contracts have now been awarded and the award of the fourth is expected in the near future. Unfortunately progress to date on actual pipelaying has been restricted by various administrative as well as technical problems, but these have now been overcome and progress is improving.

9. Provision of Treated Water Storage

Since Beheira is almost flat, there is nowhere suitable for the construction of storage which would enable a gravity supply system to be operated. All supplies are pumped and will continue to be so, but existing treated water storage is all located at treatment works and is nowhere more than about 5 hours supply at the design output of the works.

Under the project additional storage capacity and associated pumping stations will be provided at each of the new treatment works, but substantial additional storage, both at ground level and elevated, together with associated pumping stations, will also be provided at a number of places distant from the treatment works to improve the reliability of supply in these areas.

Tenders for the contract to construct these works are at present being evaluated.

10. Administrative Facilities

The BWC is at present operating from every cramped offices in Damanhur and a new headquarters is to built as part of the project on a site adjoining the new Damanhur treatment works. A central laboratory for maintaining water quality and a central workshop for major repair of plant and equipment are also to be built together with staff housing. New district centres are to be built in three markazes and existing centres are to be rehabilitated in five other markazes to enable BWC to deal more efficiently with all aspects of maintenance and consumer relations. A telecommunication system is to be provided to simplify communications. Tenders for three of the four contracts covering this work are now being evaluated and tenders for the fourth are due to be received shortly.

11. Regional Training Facilities

A training centre is to be built and equipped as part of the project to enable training to be given in all aspects of waterworks operation and maintenance. As this is to be operated on a regional basis. Accommodation for staff and trainees is also being built.

The contract for constructing the accommodation block has already been awarded and contracts for building the training centre and for the specialist equipment will be awarded soon.

21

12. Further Developments

As stated in Section 3, there may still be over 300,000 people without easy access to a potable water supply at the end of the present project, but assuming that the anticipated development of the BWC resources and manpower takes place, the company will itself be able to undertake the laying of the smaller diameter pipes and an ongoing programme of pipelaying is envisaged to bridge the gap.

Finally however, a programme of health education must be undertaken. Whilst villagers are very appreciative of the improved quality of supply in areas where rehabilitation has been carried out, there are also many areas where women can be seen washing cooking and eating utensils in polluted canals and drains within sight of operational standpipes. To change the deep rooted traditions which produce such anomalies will take time and education in the benefits of a wholesome potable water supply should therefore be started as soon as possible. The programme should be suitable for all age levels starting in schools and continuing with adult educational programmes which might include video films which could be taken to villages by suitably trained staff. Without such education the full benefits of the Beheira Water Supply Project will not be achieved.

Study on Sewerage and Sanitary Drainage Utilities

Beheira Governorate has an area of 1075 of km^2. It ranks 4th in terms of population census which is estimated to be 3,061,570, of which 739,000 are in urban areas and 2,322,000 are in rural areas. The Governorate is divided into different communities:

1. The agricultural community in rural areas.
2. The industrial community in Kafr El Dawar, Damanhur, Mahmoudeya and Rashid as well as the agricultural industry in Ganaklees.
3. The coastal community in Edkou and Rashid.

Beheira Governorate consists of 14 cities, 451 villages, and 4882 Ezbats, excluding Sadat City which is still under construction.

Achievements of Sewerage and Sanitary Drainage Utilities Projects

1. An electric elevating plant of 20L/sec. has been already built.

2. By the year 1971 4 electric plants will also have been built to cover consumption.

22

Additional Support for the Plant

1. Duplicating the discharge line to the treatment plants number 1 and number 2 by 16" in diameter.

2. Laying of earthware slope pipes 9" and 12" in diameter.

3. Laying of discharge pipes to electric plant number 3. This would be followed by laying discharge pipes to plant number 4, than plant number 2.

4. Replacing the main air compressor plant by an electric one.

5. A pump will be used to elevate drainage water to cover the deficiency in the plant's capability according to the actual needs.

Plants Under Construction

1. Kafr El Dawar Sewerage Plant

By the year 1973 the plant was started. At the beginning, the estimated cost was LE 4,000,000. Now the current estimated cost is 18,000,000. By 31 December 1984 70% of the civil work and 75% of the mechanical work was to have been completed.

2. Shobrakhayt Sewerage Plant

It was started in 1978. The estimated cost was 8,000,000 at that time. By 31 December 1984, 98% of the civil works and 80% of the mechanical works, were to be completed.

3. El Mahmoudaya Sewerage Plant

Project implementation started in 1980 with a total estimated cost of LE 4,800,000.

The Current Project Situation

a) Scope nets, elevating plants and discharge lines were started in July 1984, and the expected completion in January 1987. The drawings were accepted and the work is being carried on.

b) Elevating plants/mechanical work

A line of credit has been opened and we are awaiting the arrival of the equipment.

c) Treatment plant

Civil work is going on without any obstacles.

d) Mechanical work

50% of mechanical and electrical work is completed. We are still awaiting the loan from Netherlands' government for completing this work.

4. Abu El Matamir Sewerage Plant

Total cost is LE. 8,000,000. The actual work started September 1984 and the planed completion date is September 1987. The drawings are already prepared for some units and work has started on the civil construction.

Plans for Sanitary Drainage Projects in the Governorate

A team from the International Bank evaluated the sanitary drainage and drinking water projects in the governorate. It will finance the study of sanitary drainage projects in Beheira Governorate cities. The estimated cost is US$ 4,700,000. NOPWASD selected 7 consulting firms for tendering. These handed in their technical and financial proposals and are currently being evaluated for selection. A protocol was signed by the Government of Egypt, represented by the Ministry of Investment and International Cooperation. A delegate of NOPWASD also attended the meeting at which the World Bank agreed to finance this project at about US$ 4,000,000.

24

BEHEIRA WATER SUPPLY PROJECT

Appendix A

Existing Surface Water Resources

Name	Date commissioned	Output in cu.m/day Design	Actual
Works to retained in operation after completion of the project			
Abo Hommos	1955	60,480	65,000
Damanhur No. 3	1976	17,280	31,300
Shubra Khit	1980	34,560	20,760
Kafr El Dauwar No.2	1984	17,280	15,840
	Totals	29,600	132,900
Works to be closed down on completion of the project			
Damanhour No.1	1908	5,180	10,400
Buseili	1926	3,460	6,000
Damanhour No. 2	1930	4,320	6,500
Kafr El Dauwar No. 1	1932	3,460	3,000
Mahmoudiya No. 1		600	900
Mahmoudia No. 2		700	1,400
	Totals	17,720	28,200

Note: Works associated with borehole supplies not included.

BEHEIRA WATER SUPPLY PROJECT

Appendix B
Details of Contracts

Contract No.	Title	Status at 1.4.85	Value in Million LE	Anticipated completion
	Rehabilitation of existing treatment works :			
11	Rehabilitation of Abo Hommos and Small Treatment Works	Awarded	6.49	July 86
25	Iron and Manganese Plant at Kom Hamada	Evaluation of tenders		Oct. 86
	Expansion of treatment resources:			
4	New Treatment Works	Evaluation of tenders		June 88
10	Site investigation	Completed	0.18	Sept.83
15	Extension to Damanhur and Kafr El-Dauwar Treatment Plants	Awarded	2.70	Aug. 86
	Rehabilitation of boreholes and associated works:			
3	Supply and Installation of Chlorination Equipment	Awarded	2.95	Feb. 86
21	Rehabilitation of Boreholes	Award imminent		April 86
42	Construction of Chlorination Buildings	Awarded	0.61	Jan. 86
43	Construction of Boreholes and Elevated Reservoirs	Awarded	3.21	April 87
	Rehabilitation of existing distribution system:			
2	Network Rehabilitation in Five Markazes	Awarded	6.19	Mar. 86
8a	Supply of Domestic Water Meters	Completed	0.62	Dec. 84
8b	Supply of Bulk Water Meters	Completed	0.09	July 84
17	Network Rehabilitation in Three Markazes	Evaluation of tenders		Sept. 87
18	Network Rehabilitation in Damanhur and Kafr El Dauwar	Award imminent		May 87

Contract No.	Title	Status at 1.4.85	Value in Million LE	Anticipated completion
	Reinforcing of existing distribution system :			
1a	Supply of Pipes and Fittings	Awarded	7.79	May 85
1b	Supply of Valves	Completed	0.12	Feb.84
9	Pipelines Kafr El Dauwar and Nubariya	Awarded	5.10	Feb.86
12	Pipelines Damanhur and Shubra Khit	Evaluation of tenders	3.98	June 87
13	Pipelines Idfina	Award imminent	1.31	Nov. 86
14	Pipelines Damanhur and Kafr El-Dauwar Towns	Awarded	1.49	May 86
22	Pipelinesin Small Towns	Awarded	1.26	Sept.85
	Provision of treated water storage:			
44	Pumping stations and reservoirs	Evaluation of tenders	6.99	June 87
	Administrative facilities:			
34	Telecommunications Equipment	Evaluation of tenders		May 86
35	Equipment for District Centres	Out to tender		Oct. 86
41	Construction of District Centres	Evaluation of tenders		Jan. 87
46	Construction of Headquarters Facilities	Evaluation of tenders		Nov. 86
	Regional training facilities:			
40	Equipment for Training Centre	Evaluation of tenders		March 86
45	Construction of Training Centre Staff House	Awarded	1.89	April 86

Notes : 1. Values quoted include foreign currency elements converted to LE at the rate applicable at the date of tender.
2. Values of contracts not yet awarded are estimated only.
3. Contract No.46 includes construction of the Regional Training Centre.

MINISTRY OF HEALTH
ARAB REPUBLIC OF EGYPT

EASTERN MEDITERRANEAN REGIONAL OFFICE
WORLD HEALTH ORGANIZATION (EMRO/WHO)

UNITED NATIONS DEVELOPMENT PROGRAMME
EGYPT (UNDP) (UNICEF)

Second National Conference
on the
Sector Progress and Needs
of the
International Drinking Water Supply
and Sanitation Decade (IDWSSD) in Egypt

16-18 April 1985

WATER AND SANITATION PROGRESS IN MINIA, 1981-1985 PROSPECTS AND PLANS FOR 1985-1990

By

Dr. Eng. Safwat Abdou
Secretary General
Minia Governorate

28

Introduction

The population of Minia Governorate according to the 1981 census amounts to 2,298,000 distributed as follows:

Markaz	Population 1981	Population 1985
El Edwa	101 112	112 920
Maghagha	244 048	272 550
Bani Mazar	250 482	279 736
Matai	136 731	152 700
Samalot	310 690	346 975
Minia	427 888	477 860
Abu Qorgas	262 891	293 594
Malawi	395 715	441 931
Der Mwas	168 443	188 114
Total	2 298 000	2 566 383

Minia Governorate is quite aware of the needs for water and sanitation, as they are directly related to public health. To satisfy basic needs of water and sanitation for all people by the year 1990, the governorate started a large project to ensure safe water supply for drinking purposes. It is now working on a plan to ensure sewerage service to all cities. However, little or no agreement has been reached to provide basic sanitation services to villages.

The current status of water and sanitation, as well as the needs by the year 1990 and 2000, are summarized as follows:

City of Minia: Water supplies for treatment plants of capacity 320 L/sec. (18,000 m^3/day). The treatment plants operate at 60% of capacity at the present time. Minia City also has five artesian wells producing 6,000 m^3/day. Groundwater quality is not satisfactory for human consumption.

Considering the city population of 180,000 the average consumption per capital is estimated to be 100 L/c/d.

Water supply needs by the year 2000 will require treatment plants with capacity of 800 L/sec. to meet the increase in population which is expected to be 250,000. Cost estimate of the plant is about LE 60 million.

The distribution pipe net of the city is fairly old and needs to be supported by a pipeline with a diameter of 20 inches plus replacing and renewing some old pipelines. Cost estimates are LE 3 million.

29

El Edwa City: The city is supplied by an artesian well project of 40 L/sec. located 7 km of the city. Water quality is not satisfactory because more land permissable of mineral source and iron. This water project also is used to ensure drinking water supply to 7 villages.

Water supply needs to the year 2000:

1. Potable compact units of LE 60,000 (to be supplied by programme).
2. Water treatment plant of 100 L/sec capacity. Cost: LE 3 million.
3. Elevated water tank of 500 m^3 capacity. LE 300,000.
4. Pipe nets of about 700,000.

Maghagha City: Served by four artesian well projects of 40 L/sec. each. Water quality again is not satisfactory which may be attributed to the shallow depth of wells (26 metres). These systems are also serving eight neighbouring villages.

Needs till 1990:

1. Artesian well project of 60 L/sec. Cost: LE 60,000.
2. Compact unit of 1000 m^3/hour to be installed by NOPWASD in June 1985. Cost: LE 60,000.
3. Pipe nets support, replacement and removal of pipelines. Cost estimate LE 4,000.

Needs till the year 2000:

1. Treatment unit of 200 L/sec. Cost: LE 40,000.
2. Replacement of old pipe nets. Cost: LE 1,500,000.

Beni Mazar City: The city is served by treatment plant of 40 L/sec. plus 4 artesian wells of 40 L/sec. each. Groundwater quality is not satisfactory due to excessive manganese contents. This water system is serving also four villages and water supply is not sufficient and needs to be supported by the following:

1. Rehabilitation of the existing treatment plants and installing compact unit of 100 m^3/hour which will be provided by NOPWASD in June 1985. Cost: LE 100,000.
2. Treatment plants of 20 L/sec. Cost: LE 4 million.
3. Support, replacement and renewal of pipes. Cost: LE 400,000.
4. Replacing and renewal of old pipes. Cost: LE 1,500,000.

Matay City: Served by an artesian well system of 30 L/sec. Water quality is not satisfactory with excess manganese contents. A treatment plant of 100 L/sec. is under construction and under supervision of NOPWASD.

Needs till 1990:

1. Completion of the treatment plants.
2. Elevated tank of 50 m^3. Cost: LE 300,000.
3. Pipeline (16 inches). Cost: LE 200,000.

Needs till year 2000:

1. Replacements, renewal of pipes. Cost: LE 300,000.

Samalot City: The city is served by treatment of 60 L/sec. plus 3 artesian systems of 40 L/sec. each. Two villages are also served by this system.

Needs till the year 1990:

1. Artesian well system and rehabilitation of the existing treatment plant. Cost: LE 150,000.
2. Elevated tank of 1000 m^3 capacity. Cost: LE 450,000.
3. Support, replacement and renewal of pipes. Cost: LE 500,000.

Needs till year 2000:

1. Treatment plant of 300 L/sec. Cost: LE 5 million.
2. Replacing old pipes. Cost: LE 1,500,000.

Malawi City: Served by treatment plant of 60 L/sec. plus 4 artesian well systems of 40 L/sec. each. Again, water quality is not satisfactory due to excessive mineral salts and iron.

Needs till 1990:

1. Treatment plant of 400,000 L/sec. Cost: LE 6 million.
2. Compact unit: (to be supplied by BVS). Cost: LE 60,000.
3. Completion of the elevated tank under construction (1,000 m^3 capacity). Cost: LE 250,000.

Needs till year 2,000:

1. Replacement of old pipes. Cost: LE 1,500,000.

Der Mwas City: It is served by an artesian well system of 25 L/sec. Water is being treated by a treatment unit to remove iron and manganese because of the unsatisfactory water quality of this unit. An artesian well system of 60 L/sec. has been installed 6 kms from the city.

Needs till 1990:

1. Elevated tank of 500 m^3 capacity. Cost: LE 300,000.
2. Support, replacement and renewal of pipes. Cost: LE 20,000.

31

Needs till the year 2000:

1. Establishing a new treatment or groundwater plants of large capacity. Cost: LE 100,000.
2. Replacement and renewal of pipes. Cost: LE 500,00.

El Fekreya City: City as well as 6 neighboring villages are served by two artesian wells of 60 L/sec. and another artesian well of 40 L/sec.

Needs till 1990:

1. An artesian well plant of 100 L/sec. Cost: LE 20,000.
2. Support, replacement and renewal of pipes. Cost: LE 300,000.

Needs till years 2000:

1. Replacement of old pipes. Cost: LE 1,000,000.

From the above, it is apparent that to meet the cities' needs until the year 1990, it will cost LE 27,950,000. LE 20 million is available as a U.S. grant for Minia City for supporting provincial city projects. In addition to the above, LE 26,150,000 are required till the year 2000.

Water Supplies for Rural Areas

There exist 172 artesian ground water supply systems for all the villages. However, 4 villages and 600 Ezbat (single villages) lack water supplies. 60 ground water supplies are identified with unsatisfactory water quality in terms of excessive mineral salt.

Needs till 1990:

1. One compact unit to serve two villages in Maghagha Markaz. Also needed for these villages is an elevated water tank and 6 km of pipes, estimated cost LE 350,000.

2. One portable compact unit to serve one village in Markaz Muteai (to be provided by NOPWASD in June 1985). Cost: LE 200,000.

3. 60 units of water treatment plants to remove iron and manganese. Cost: LE 12,000,000.

4. Replacement of 30 clean water tanks (20 to 30 m^3 capacity each) by 100 to 200 m^3 tanks. Cost: LE 3,000,000.

5. Replacement of and renewal of pipes for some Ezabs. Cost: LE 2,000,000.

32

Needs till the year 2000:

Supplying all Ezabs that lack water with pipes and supporting existing ground water plants and replacing clean water tanks. Cost: LE 2,000,000.

From the above, it is clear that funds for water supplies till 1990 are estimated to be LE 18,000,310 and with a total of about LE 20,000,000 will be needed up to the year 2000.

Current Status of Sewage Projects in Minia Governorate and Needs till the Year 2000

The Governorate of Minia lacks any type of sewage projects except the City of Minia. However, a new sewage project is in process of implementation in El Fekreya City.

First: Current Status of the Project

This project, constructed 20 years ago, consists of the following:

A. Five sewage pumping stations. 2 of these are main stations: (1) El Sahrig station in the center of 140 L/sec.; (2) El Gharbeya station in Tahr El Gabaa next the city of 90 L/sec.
The other three are smaller units: (1) Ard Sultan unit of 50 L/sec. serving the area north of the city; (2) El Helmeya unit of 20 L/sec. serving the area south of the city; and (3) El Maglis unit of 20 L/sec. serving the area in the middle of the city.

B. Sewage pipe net, 40 km in length.

C. Sewage treatment plant of 200 L/sec. southwest of the City, in addition to a cast iron pipe net of different diameters connecting the pump stations and the treatment plants.

Second: Sanitary Drainage Problems and the Requirements till the Year 2000

Due to the urban expansion from Minia northward, westward and southward, it is necessary to increase the services in these areas.

1. Taking advantage of the project to support Sanitary Drainage in Minia (Gahia plant) of 250 L/sec.

2. Taking advantage of this project, the requirement of making the needed support to treatment plant to increase its capacity to 400 L/sec. till the year 2000. This will cost around LE 5,000,000 total.

3. Making complete use of the supporting station, it is required to install a pipeline, 400 mm in diameter to connect El

33

Sahrig station with the supporting station. This will cost LE 500,000.

4. Due to the urban expansion southward, the city El Helmeya sewerage system cannot handle all the sewage waste. For this reason, the system should be replaced or rehabilitated together with changing the pumping facilities to reach 50 L/sec. in capacity. This requires LE 1,000,000.

5. Enlarging the current pipe net by 30 km to reach the areas lacking sewage facilities. LE 2,000,000 are needed to cover these expenses.

6. A new district is established south of the city which needs a sewage pipeline and pipe sets of estimated cost LE 1,000,000.

7. The University Ein Shalaby district needs a pipeline and pump sets. Cost: LE 3,000,000.

8. LE 4,000,000 is needed to support facilities required for sewage system till the year 2000.

From the above, it is estimated that LE 18,600,000 is needed to support the sewage facilities in Minia City.

El Fekreya City:

The project of El Fekreya City consists of:

- main pumping station
- three small pumping stations
- a collection pipe net
- effluent pump set
- treatment plant

The cost estimate of this project is about LE 9,000,000.

The implementation of the project which was started in 1984 takes place under the technical supervision of NOPWASD.

It should be indicated that the rest of the governorate's cities are in urgent need of sewage systems. These systems may be planned in two stages. The first stage, from 1985 till 1990, includes cities Bani Mazar, Maghagha, Malawi and Samalot.

These cities are already suffering from an overflow of wastewater due to the high water table. It is estimated that each project will cost LE 9,000,000.

The second stage, from 1990 till the year 2000, will include cities Matai, Der Mwas and El Edwa. Each of these will cost also LE 9,000,000. From the above it can be seen that LE 36,000,000 is needed to supply the governorate's cities with sewage facilities.

Minia Governorate: Environmental Affairs Department

Drinking Water Projects

Markaz	Existing Projects till 1985	Needs from 1985-1990	Amount in LE Thous.	Needs till year 2000	Amount in LE Thous.
El Edwa	Artesian well projects of 40 L/sec	-One treatment plant -Pipeline of 10" dia. -Replacement and renewal of pipes	60 120 60	-One compact treatment unit of 100 L/sec -Reservior of 500m^3 -Replacement and renewal of pipes	3000 300 500
Total			240		3800
Maghagha	-One compact treatment unit of 40L/sec -Three artisian well projects, each of 40 L/sec	-One artesian well project of 60 L/sec -One treatment unit of 100 m^3/hour -Support, replacement and renewal of pipes	60 60 100	-Replacement of old pipe nets of 18", 14" and 16" dia. -One treatment plant of 200 L/sec	1500 400
Total			220		1900
Bani-Masar	-One compact treatment unit of 40 L/sec -Four artesian well projects of 40 L/sec each	-Support to existing treatment plant and addition of compact unit of 100 m^3/hour -One treatment plant of 200 L/sec -Replacement and renewal of pipes	100 4000 400	-Replacement and renewal of old pipe net of 16", 14" and 12" dia	1500
Total			4500		1500

Markaz	Existing Projects till 1985	Needs from 1985-1990	Amount in LE Thous.	Needs till year 2000	Amount in LE Thous.
Matay	-Artesian well project of 30 L/sec -Constructing a treatment of 100 L/sec by NOPWASD LE 1,000,000 was already paid to it till now	-Continuing the treatment project -Extend a pipeline of 16" dia from the new plant till Matay City of length 2 km -Reservoir of 500m^3	2000 200 300	-Replacement and renewal of pipes	300
Total			2500		300
Samalot	-One treatment plant of 60 L/sec -Three artesian well projects of 40 L/sec	-One artesian well project of 60 L/sec and supporting current existing treatment plant -Support, replacement and renewal of pipes -Reservoir of 1000m^3	150 500 450	-One treatment plant of 300 L/sec -Replacement of old pipes with new ones of 16", 14" and 12" dia	5000 1500
Total			1100		6500
El Fekreya	-Two treatment plants of 60 L/sec and 40 L/sec	-One artesian well project of 100 L/sec -Replacement and renewal of pipes	120 300	-Replacement of old pipes with new ones of 16", 14" and 12" dia	1000
Total			420		1000

Markaz	Existing Projects till 1985	Needs from 1985-1990	Amount in LE Thous.	Needs till year 2000	Amount in LE Thous.
Minia	-2 treatment plants of 320 L/sec, 18000m^3 daily efficiency does not exceed 60% -4 artesian well projects of 6000m^3 daily	-One treatment plant of 400 L/sec -2 portable compact treatment plants of 100m^3/hour each -Support, replacement and renewal of pipes	10000 120 1000	-Expansion of treatment plant to be 800 L/sec in capacity -Replacement of old pipes with new ones of 20", 18" and 12" dia N.B. Minia City has got LE 25,000,000 provided by USAID improving water and sanitation in provincial governmental cities	6000 3000
Total			11120		9000
Malawy	-One treatment plant of 60 L/sec -4 Artesian well projects of 40 L/sec	-Install one portable compact treatment unit -Construct one treatment plant of 400 L/sec -Support, replacement and renewal of pipes -Continue the construction of the water reservoir of 1000m^3 -Support to artesian well project and treatment plants which is currently operated by electric units and diesel engine	60 6000 600 250 100	-Replacement of old pipe nets with new pipelines of 20", 16", 14" and 12" dia	1500
Total			7010		1500

Markaz	Existing Projects till 1985	Needs from 1985-1990	Amount in LE Thous.	Needs till year 2000	Amount in LE Thous.
Dar Maws	-One artesian well project of 250 L/sec -One artesian well project of 60 L/sec	-Construct a water reservoir of 500m^3 -Support, replacement and renewal of pipes	300 200	-Support current projects by bigger units -Replacement and renewal of pipes	100 500
Total			500		600

From this data it is clear that the needs of the cities until the year 1990 is LE 27,950,000, whereas LE 10,000,000 is provided by USAID to Minia City. It also needs LE 26,150,000 until the year 2000.

Population Census (Minia Governorate)

Year / Markaz	1981	1982	1983	1984	1985
El-Edwa	101112	103943	106853	109845	112920
Maghagha	244048	250881	257906	265127	272550
Mani Mazar	250482	257495	264705	272117	279736
Matai	136731	140559	144495	148541	152700
Samalot	310690	319389	328331	337524	346975
Minia	427888	439868	452184	464845	477860
Abu Qorgas	262891	270252	277819	285598	293594
Malawi	395715	406795	418185	429894	441931
Der Mwas	168443	173159	178007	182991	188114
Total	2298000	2362344	2428489	2496482	2566383

MINISTRY OF HEALTH
ARAB REPUBLIC OF EGYPT

EASTERN MEDITERRANEAN REGIONAL OFFICE
WORLD HEALTH ORGANIZATION (EMRO/WHO)

UNITED NATIONS DEVELOPMENT PROGRAMME
EGYPT (UNDP) (UNICEF)

Second National Conference on the Sector Progress and Needs of the International Drinking Water Supply and Sanitation Decade (IDWSSD) in Egypt

16-18 April 1985

WATER AND SANITATION PROGRESS IN DAMIETTA 1981-1985 AND PROSPECTS AND PLANS FOR 1985-1990

By

DR. ANWAR EL FOLALY
Director General
Ministry of Health, Damietta Governorate

The population of Damietta Governorate was 614000 persons in the year 1980. This population increased to 64000 in the year 1985, and will reach to one million in the year 1990.

Ras El-Bar city receives about 50,000 persons during the summer season from other governorates.

If we propose that the daily need for water is about 200L of drinking, domestic use, the sum of water needed reaches 138,8000,000 L/day. Now we take a look on the quantity of water available as follows:

Water Available

Source	L/Sec	L/Day
Bustan Water Plant	600	51 840 000
Kafr Soliman	300	25 920 000
Damietta Old Plant	100	8 960 000
Sherbein	50	4 480 000
Bustan	50	4 480 000
Total	1100	95 680 000

After initiating and constructing the new Port of Damietta the population will further increase due to the new manpower needed.

Also Gamasa consumes about 1/4 the available water during the summer season.

Also there is always complaint from the shortage of water in the rural areas & cities of 2 districts Zarka and Farascour because their water supply comes from Bustan Plant.

Some rural areas in Kafr Saad take their water supply from Sherbin plant.

Also there is complaint that the water do not reach upstairs and so the need for electricity water pumps.

1. Now a brief account on each water plant:

   - Old Damietta water treatment system. Founded in the year 1906 gives water output 100 L/Second supplies water for Damietta City. Source: is liable to pollution due to sewage infiltration to Nezamia canal along bank side from villages near the bank so the source must be shifted to the Nile bank near Adlia, this project is going to be fulfilled by lengthening the pipes for row water 30 M. during 3 months.

     Also Nezamia canal should be dumped as it irrigates only 3 Feddans.

41

- Sedimentation basins:

  As Damietta governorate lies at the end of the River Nile, sedimentation basins need frequent washing by ca cl2 to remove algae covering the basin walls every 15 days.

- Filtration basins:

  Also need frequent washing with ca cl2 and sand change when needed.

- Disinfection:

  Strategic store for 3 months at least. The water treatment system needs a laboratory and chemicals for estimation of alum and estimation of inorganic and metallic elements in water.

- Training of paramedical personnel on medical supervision for prevention of epidemics and control of quality of drinking water.

2. Bustan water plant:

Founded in the year 1970, water output 600L/Sec., supplies water to Damietta city and the rural area of Damietta district.

- Recommendations:

  Row water pipes must be extended a suitable distance in the Nile stream to avoid algae and other sources of pollution fluid and industrial drainage.

- Sedimentation basins:

  To get rid of floating algae, developed basins are implemented.

- Filtration basins:

  Walls should be washed with ca cl2 to remove attached algae.

- A laboratory should be supplied by chemicals and equipments to estimate alum and discover any inorganic or metalic elements present.

3. Kafr Soliman water plant:

Founded 1984 original output 600, L/Sec. consist of 3 floculation basin 200 L/Sec. each and 14 Filtration basin gives water supply to Kafr Saad District. Ras el Bar City Gamasa area.

But some problems arose during working, e.g., floculation and sedimentation basins. There is leakage from the walls; two of them are out of work for repair.

Also 7 of the filtration basins are out of work for repair as there is leakage from their walls.

Also their underground water store can store 4000 m_3.

Sewage Disposal in Damietta Governorate

Due to the health hazards and summer diseases epidemics due to sewage disposal in the River Nile & its canals the Law 48/82 was issued. By this law it is forbidden to drain any human or industrial excreta to the Nile or its canals before sanitary treatment and getting license from the Ministry of Irrigation.

As many villages in Damietta governorate drain sewage to the Sharkaweya Canal before sanitary treatment, the need arose in 1982 to construct treatment plants. The project started in 8 villages in which the citizens provided the land necessary For implementation. These villages are Roda, Shara Bas Kafr El Arab, Ghonamia, Elsere, Meet El Kholy, El Westany and Meet Abo Ghaleb.

Sewerage pipes were dug in the streets. The method in use is the Extended Airation plant. All the preliminary work was finished as main and secondary pipes, road payment, electrical power, water supply and the compact units arrived.

Table 1

Village Name	Population	
Roda	13923	big unit
Sharabas	8755	small unit
Kafr Elarab	8037	"
Ghonamia	5797	"
El serw	14000	big unit
Meet El Kholi	10300	small unit
El Westany	15000	big unit
Meet Abognaleb	14800	"

Note: The cost of big unit 329514 $
" of small " 230515 $

4(2)

Table 2: Cost in Egyptian Pounds

Name	Sewerage	Electrical Cable	Road Paving	Water Supply	Civil Work
Roda	86000	47696	71545	13030	289453
Sharabas	14400	19989	39900	2385	163687
Kafr Elavab	119000	17011	51840	5425	193687
Ghonamia	127000	17011	39920	4755	289453
El Serw	150000	32088	17450	4425	289453
Meet El Koly	150000	22968	50840	3165	193687
El Westany	150000	7006	10000	4125	193687
Meet Abu Ghalab	148000	6243	41900	7425	193687

Six new villages will adopt another method of treatment plants, i.e., oxidation ditch plants. These villages are: Kafr Soliman, El Bara Shya, El Rahamna, El Khyatta, Kafr, Saad, Eafl El Battikh. Kafr Shehata Will be combined with Kafr Saad.

Table 3

Village	Population Year 85	Plant Land	Level of Underground Water
Kafr Soliman	12500	2200 M2	1.0 M
El Barashys	9866	2100 M2	0.75 M
El Rahamna	13344	2100 M2	0.75 M
El Khyatta	14076	2100 M2	0.70 M
Kafr Saad	22076	2100 M2	0.90 M
Kafr El Batikh	29087	3150 M2	0.70 M

Costs of the oxidation ditch plant:

1. 124 000 E* initial cost
   10 000

2. Maintenance and working cost 16,500 E.
   3,500

* (Egyptian Pound)

Health Hazards from Water Pollution

Some cases occurred in some rural areas. In the year 1984, 17 cases of colitis occurred in the rural areas of Damietta, districts taking their water supply from Bustan plant.

44

Number of Cases of Colic
During the Year 1984

Area	Number of Cases	Date	Water Treatment Plant
Bandr Damietta	2	14/5/84	El Bustan Plant
		23/8/84	"
Awlad Hamam	1	14/5/84	"
El Khyatta	4	24/5/84	"
		24/5/84	"
		17/6/84	"
		18/6/84	"
Ghayt El Nasara	3	16/6/84	"
		11/8/84	"
		14/8/84	"
El Basartta	2	5/7/84	"
		13/8/84	"
El Sananeya	1	5/7/84	Kafr Soliman Plant
Shat Garina	3	10/7/84	El Bustan Plant
		10/7/84	"
		22/10/84	"
El Adleya	1	12/8/84	"
Total	17		

Recommendations

- Rapid repair & good maintenance of floculation basins and filtration basins before the summer season.
- Change of old distribution pipe lines.
- Washing the distribution pipe lines.
  Frequently when water analysis samples show pollution.

Water Supply Project

1. 3 compact units will be implemented each 30 L/Sec. 2 for rural area of Farascour district and one for sewerage plant at Enania.

45

2. Adlia new water treatment system will give 400 L/Sec. to replace old Damietta water plant to supply Damietta city with water.

3. New Damietta Port, water treatment system will give 1000 L/Sec. to supply water for new Damietta city and the port.

4. Dakahla raising station:
   To raise the water coming from Bustan supplying part of rural area of Farascour district.

MINISTRY OF HEALTH
ARAB REPUBLIC OF EGYPT

EASTERN MEDITERRANEAN REGIONAL OFFICE
WORLD HEALTH ORGANIZATION (EMRO/WHO)

UNITED NATIONS DEVELOPMENT PROGRAMME
EGYPT (UNDP) (UNICEF)

Second National Conference
on the
Sector Progress and Needs
of the
International Drinking Water Supply
and Sanitation Decade (IDWSSD) in Egypt

16-18 April 1985

LOW-COST TECHNOLOGY FOR RURAL SANITATION

By

M. A. Porter, P. Eng.
WHO Consultant

47

On 28 February 1985 a workshop on Low-Cost Technology for Rural Sanitation was held at the Embaba Health Occupation Centre under the joint sponsorship of the Ministry of Health, UNDP and WHO. There were about 25 participants drawn from the public and private sectors, together with representatives from international agencies, etc.

Some 9 papers were presented, each followed by discussions leading to general agreement as to recommendations which should emanate from the workshop.

Dr. Gamal presided at the opening of the proceedings and his introductory remarks succinctly described the less than satisfactory situation within Egypt with respect to sanitation and, in particular, wastewater disposal. He noted that even in the largest cities many areas were not sewered and that all systems were, to a greater or lesser degree, overloaded and not providing adequate treatment; this presented a dangerous health hazard. He went on to assert that the subjects of water supply and wastewater disposal could not be separated as they were so closely related. For rural communities, Dr. Gamal made reference to an earlier, Ministry of Health programme sponsored by the U. S. Government under which pit latrine slabs and pit sides were fabricated by the Ministry and supplied at heavily subsidized prices to the rural communities. The programme had been well received and he regretted that his Ministry had been unable to continue this work.

He drew attention to the health advantages of the sanitary disposal of excreta and other waste matter, pointing out that the cost of conventional methods were prohibitive and there was thus a need for appropriate low-cost technology for situations within Egypt.

The subsequent papers and discussions dealt with the rural communities' problems in the field of rural sanitation and possible alternative solutions thereto. It was noted that different areas had different problems and that there was not one single solution.

Some areas now had adequate water supply systems permitting the installation of water closets in the homes; other areas were still short of water which, for the majority of the people was collected from public standpipes.

Some areas had sewers laid and in use but no treatment facilities; other areas suffered from high water tables.

Each situation was reviewed and recommendations made as seen most appropriate.

For rural communities, with few private connections, and where many had no means of sanitary disposal of excreta, there was unanimous agreement that the pit latrine was the most appropriate

48

solution -- it was low-cost to provide, had minimal running costs and was suitable for local participation.

The workshop endorsed the "improved pit latrine" design shown in the World Bank books on low-cost technology for rural sanitation: it also recommended the double pit latrine where space and funds permitted. The advantages of the double pit are that once one unit was full, it should be sealed off and left undisturbed for at least six months, and preferably 12 months. After this period the excreta would have changed into a dry, inoffensive humus easily removed and suitable as a soil conditioner.

The major feature of the "improved pit latrine" is the introduction of a relatively large vent pipe, painted black to absorb the heat, and thus induce an air flow from the pit up through the vent to the open area. This ensures an odour-free toilet.

Where only single latrines are constructed these will require periodic cleaning, preferably by vacuum pump tanks: the provision of this service, at a nominal charge, was recommended. (Several village councils already do this.)

For areas with high water tables the pit design can be adapted by building the structure essentially above ground and a shallow pit constructed but with the same cubic capacity as the "standard" pit.

With the introduction of piped water supplies to rural areas much less use is made of shallow wells -- provided that the wells are some distance from the latrine some initial soil contamination could be accepted -- a depth of 2 metres forming an unsaturated zone will usually provide the necessary defense against pathogens which have a relatively short life.

Studies indicate that it is cheaper to develop a safe groundwater source for domestic use and pipe this to the area than to construct treatment facilities for making polluted groundwater safe. Polluted groundwater is the lesser of two evils when compared with polluted surface water.

The main features of the "improved" pit latrine are its freedom from odours due to an induced air current drawing air down into the pit or discharging this, via a vent, to the open air above the latrine: a fly screen at the top of the vent prevents their escape and they fall back into the pit and die.

It is important that the latrine be relatively dark so that flies do not seek a way out via the latrine's slab opening. Where doors have proved unsatisfactory the "aired" latrine has proved successful.

Annexed to this report are design criteria applicable to the most recent improvements to the pit latrine.

49

Where the village community has a good water supply system a felt-need develops for a water-borne sewage disposal system and under the BVS programme a number of villages have laid 'nominal' drainage networks and quickly converted these into sewers for domestic wastewater including excreta disposal.

This has created new problems in:

1. There is now a growing accumulation of raw sewage at the discharge point as no treatment facilities were included in the design;

2. The pipelines were not designed as sewers and there must be considerable doubt that pipe diametres and gradients are suitable;

3. These new systems will require funds for operation and maintenance but currently nothing is levied hence no specific funds have been established; and

4. Treatment facilities, which are expensive, must be provided.

Rural communities feel that they have been deprived of many urban facilities such as regular supplies of piped water and sewerage systems -- where new drainage pipelines have been laid it is a certainty that revertion to pit latrines from a newly installed water-carriage system within the house will not be accepted.

Treatment of the sewage is thus a priority health measure; alternative solutions are discussed below:-

1. <u>Conventional Treatment</u>

   This would be the adoption of the techniques currently used for urban communities. The method is well known. The capital costs is seen as prohibitive and valuable arable land would be required for the plant. The annual operation and maintenance costs would be high but no source of funding has been identified.

   It is generally accepted that this technology is not suitable or appropriate unless the population is not less than 50,000, a 100 litres cap/day water supply exists and almost all houses are connected to the system. Adequate revenue for operation and maintenance must be assured.

2. <u>Waste Stabilization Ponds</u>

   This system is the simplest and has low capital construction costs and annual operation and maintenance costs.

   Its major drawback is the area of land required: valuable arable land should not be used for wastewater treatment.

50

The cost of land is also a major negative factor except in desert areas.

3. Oxidation Ponds

This system is appreciably more compact than the waste stabilization pond but it does require a relatively large area.

Construction costs are not cheap but low-cost alternative designed are now available which can induce appreciable savings.

Some expertise is needed for efficient operation and maintenance; this is not currently available.

Its cheapness in comparison to the conventional plant makes it an attractive alternative.

4. Compact (Package Plants)

This system(s) have two major advantages, i.e., they use less land than the other systems and they can be purchased as complete packages with very short installation periods.

Disadvantages are currently very high capital costs with high percentage of imported components; they are not easy to operate a maximum efficiency nor particularly cheap to run.

No system stands out as an example of appropriate low-cost technology when land costs are included.

With government policy specifically against the use of valuable arable land for other than agricultural purposes, the waste stabilization pond is only appropriate where other land is available at reasonable costs.

The oxidation pond has attractions but it is a relatively large land user.

Compact plants have decided attractions but a major contra-factor is their high cost, particularly in foreign exchange.

It would appear beneficial to explore in depth variations from the standard "package plant" to see what savings might be possible. The first potential saving is to eliminate the importation of components which can be fabricated locally, i.e., the steel plate tanks, pipework, etc. At the workshop two pipes, by local manufacturers, appear worthy of further exploration.

Currently compact plants rely on sustained super-aeration. Naim Mahfouz Engineering House describes a process of screening, use of a comminutor and strainer then passing to a filter-bed

51

with forced-air ventilation and the effluent then passing to a clarifier. This is a simple process and should be low in capital cost and annual operation and maintenance: the quality of the final effluent must, however, be established.

Another approach aimed at low-cost is that proposed by Samir Boutros which can involve location participation: essentially a holding tank is constructed in steel, concrete or brick capable of holding one day's wastewater. A floating aerator ensures aeration of the sewage.

During the night period or "nil flow" the aerators are turned off and the wastewater allowed to settle for about two hours. The supernatent is then drawn off by gravity and the settled sludge is discharged to drying beds; some remains in the tank. It is understood that a trial model unit is to be constructed.

Normal "compact" plants are expensive as all components are fabricated abroad and have to be shipped out. The process is normally extended aeration. Care and attention are necessary for correct operation and maintenance. The system must be continuous, i.e., 24 hours/day operation.

"Compact" type plants appear to be the best solution where village communities have laid sewers and have made house connections. This, however, is not low-cost technology if the units are imported.

It appears that a number of units are to be provided under the BVS programme and a training course of potential operations is an obvious prerequisite for success.

Other approaches to the sanitary disposal of wastewater and excreta include the simple water-seal toilet developed chiefly in India. It has the advantage of using small amounts of water (1 to 2 litres) and the seal prevents any odour problems. The excreta can be discharged to a septic tank and the effluent disposed of by land drains. All equipment for such systems can be locally fabricated.

A variation on the above system is to connect the tank outlet to a small diameter sewer and lead this to a simple treatment facility. As no solids are transported in the pipeline, the pipes can be small in size and laid to flat gradients.

Conclusion

Until rural communities can financially support an efficient public sewerage system, individual systems based on the "improved" pit latrine appear to be the most economical solution for providing sanitary excreta disposal. A subsidized slab and pit well programme is recommended.

Where sewers have been laid and house connections made, there is essentially no option but to provide a treatment facility.

Imported "compact" units are no long-term solution although if provided free of charge they can be accepted.

Low-cost techniques should be developed along the lines described in this paper which involve minimal foreign exchange expenditure, can incorporate local participation and which are relatively simple to operate and maintain.

To ensure funds are available at least a nominal charge should be introduced.

An operators' training course is seen as a prerequisite for success.

If a village has a drainage project for lowering the water table, this <u>should</u> <u>not</u> be converted into a sewer.

Annex 1

Design Criteria for Pit Latrines

The sketch (Figure 1) overleaf shows the basic construction details taken from the TAG Technical Note No. 13, "The Design of Ventilated Improved Pit Latrines." Unlike the original pit latrines, no cover should be placed over the squat hole as this would inhibit the flow of air from the pit up through the vent pipe.

The doorway or entrance to the latrine should face the prevailing wind to facilitate the flow of air into the latrine and this resultant air pressure increases the flow of air up the vent pipe.

Vent pipes should be located so as to obtain the maximum sun and so create a warm air effect.

Vent Pipe diameter should be not less than 150 mm for A.C. or PVC pipes; a brick vent should be not less than 230 mm square. (If a high wind speed is assured pipe diameters may be reduced, i.e., 100 mm ø).

Squat-holes should be small enough to prevent children from falling through. "Key" shape is preferred -- see sketch for dimensions (Figure 2).

Pit dimensions should be appropriate to the number of people using the latrine and its capacity should preferably be adequate for two years' usage without emptying. For a family of 10 persons a pit of $1.2m^3$ effective volume is adequate, the solid accumulation rate being $0.06m^3$/person/year.

Pits need not exceed 1 metre in depth and are usually 1 to 1.5 metres in length and/or width.

For areas of high water table the pit latrine may be constructed partly above ground and it may be more shallow than normal. (See also sketch Figure 3)

The entrance to the latrine requires a close-fitting door to ensure a relatively dark interior. Any flies breeding in the pit will then seek the brighter light at the top of the vent rather than escaping via the pit opening.

Where doors are not suitable, a new design "spiral latrine" is suggested. This obviates the need for a door.

The pit should be lined with precast concrete interlocking slabs similar to the standard Ministry of Health design; it can, however, be lined with concrete blocks or brick work. All joints should to be fully mortared for the top half metre of the pit but vertical

joints below this level may be left "open".

Floor slabs can be made up of individual slabs jointed together for ease of handling; slabs to be removed for pit emptying can have lifting rings cast in.

Latrine sizes should be approximately 1000mm x 900mm x 1700mm high for single units.

Soakaways can be incorporated in the design if it is desired that the pit itself shall be watertight to prevent contamination close to the structure (see Figure 4). This design is also suitable where a "pour-flush" water seal unit is used.

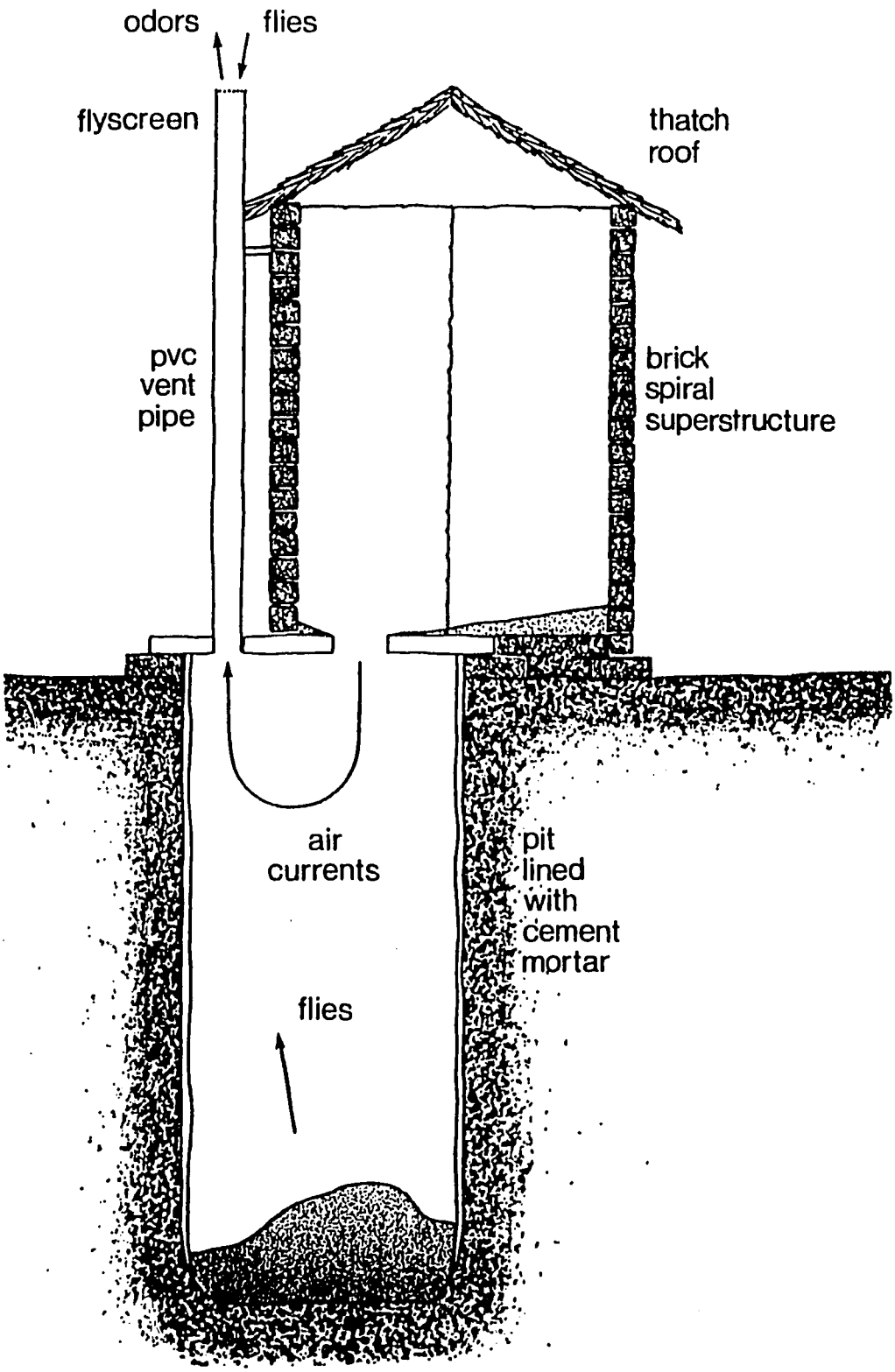

Figure 1. Schematic diagram of a ventilated improved pit latrine.

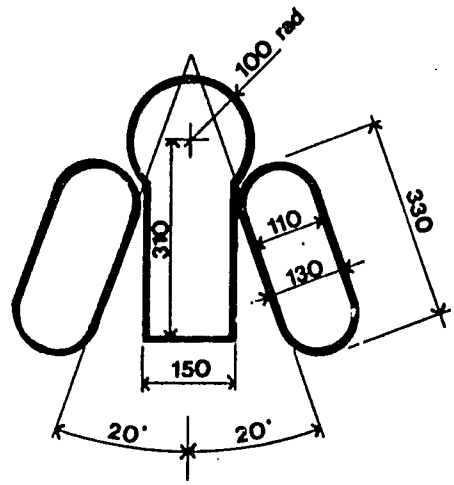

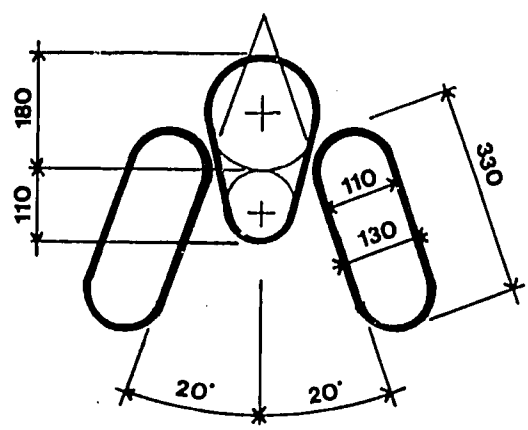

Figure 2 . Squat-hole geometries.

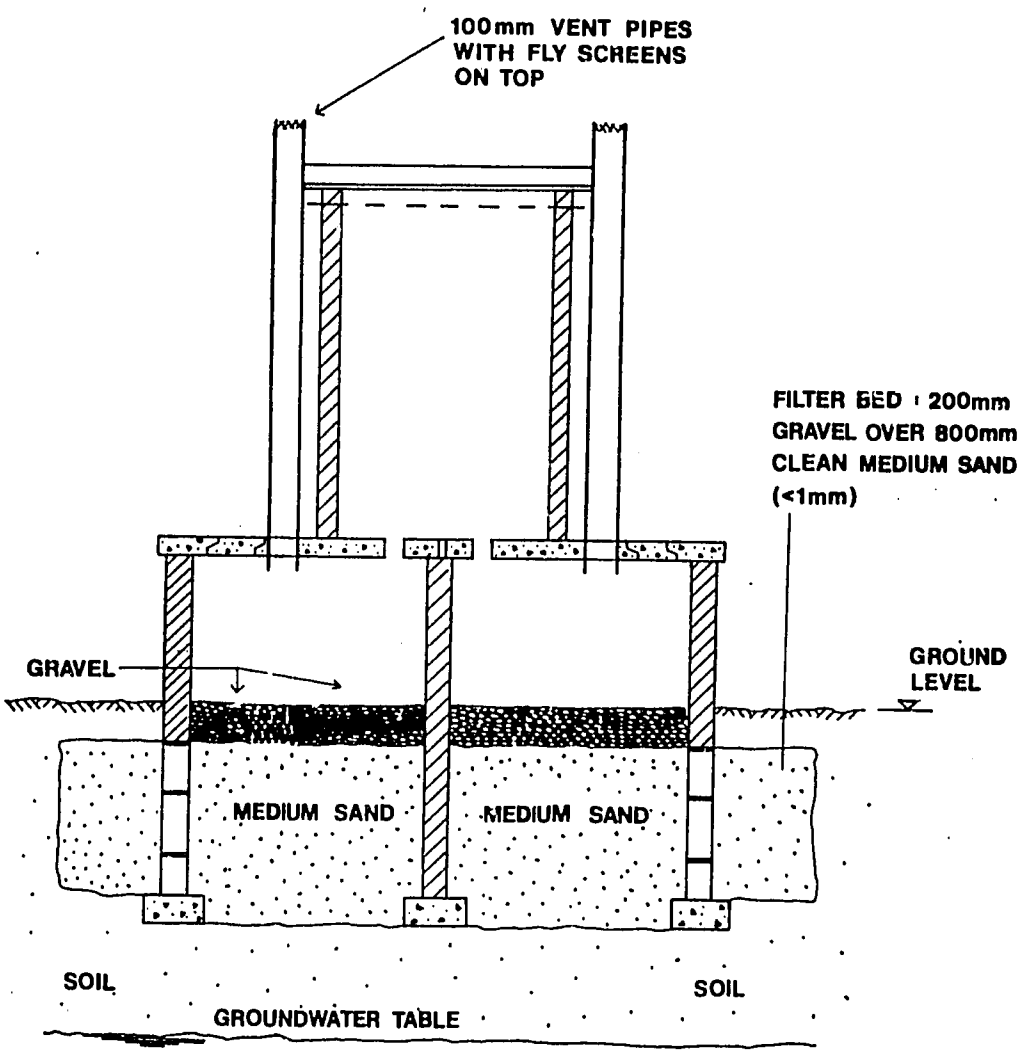

Figure 3. Raised alternating twin-pit VIP latrine with filter bed to reduce groundwater pollution

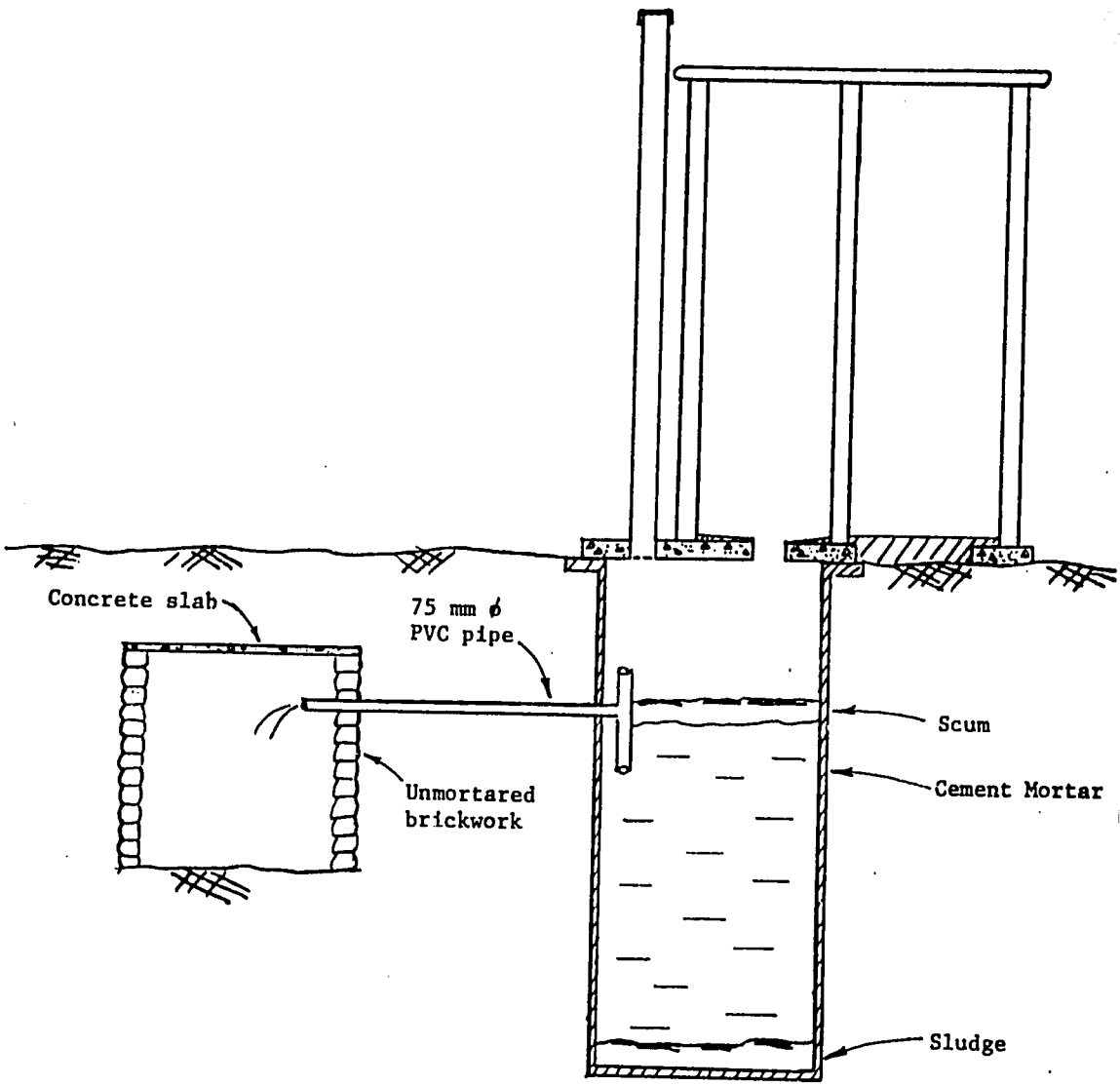

Figure 14. Schematic diagram of a VIP latrine with soakaway.

SECOND NATIONAL CONFERENCE ON THE SECTOR PROGRESS AND NEEDS OF THE INTERNATIONAL DRINKING WATER SUPPLY AND SANITATION DECADE (IDWSSD) IN EGYPT

RECOMMENDED APPROPRIATE TECHNOLOGY FOR DRINKING WATER SUPPLY OF RURAL COMMUNITIES IN EGYPT

1- SELF-CONTAINED SYSTEM - SCS

2- DEEP HAND PUMP - INDIA MARK II

Prepared by:

VLADIMIR PANIC
Senior Officer
Water Supply

UNICEF - CAIRO

April 1985

60

TABLE OF CONTENTS

DESCRIPTION	PAGE
I. INTRODUCTION	2
A- Reasons for UNICEF involvement.	2
B- Why SCS & Deep Hand Pump (?)	2
II. BRIEFLY ABOUT SCS	3
A- SCS components.	3
B- First experience.	4
III. BRIEFLY ABOUT DEEP HAND PUMP - INDIA MARK II	4
A- Main components of the pump.	4
IV. UNICEF ASSISTED DRINKING WATER SUPPLY PROJECT OF UPPER EGYPT INTORDUCING APPROPRIATE TECHNOLOGY: SCS & DEEP HAND PUMPS	6
A- SCS project component.	6
B- Hand pump project component .	8
V. ARGUMENTS BEHIND RECOMMENDATION FOR WIDE REPLICATION - AT THE COUNTRY LEVEL	9
A- Self-Contained System - SCS	9
1- Why SCS ?	9
2- Where SCS ?	10
B- Why India Mark II hand pump ?	11

ATTACHMENTS

Drawings	No:	1-7
Tables	No:	1 & 2
Map	No:	1

RECOMMENDED APPROPRIATE TECHNOLOGY FOR DRINKING WATER SUPPLY OF RURAL COMMUNITIES IN EGYPT

1- SELF-CONTAINED SYSTEM (SCS)

2- DEEP HAND PUMP - INDIA MARK II

I. INTRODUCTION

A. Reasons for UNICEF involvement

Supply of safe drinking water, supplemented by adequate environmental sanitation, is considered a crucial element in the overall process of human development. In that light, the fact that over 35% of the rural population in Egypt lack access to safe drinking water should be taken very seriously. It is estimated that, unsafe drinking water and lack of adequate sanitation and hygiene measures indirectly accounts for nearly 50% of the mortality cases among children of preschool age in rural areas of Egypt.

Hence, the provision of safe drinking water became an entry point for all other activities of the UNICEF Country Programme for Egypt.

UNICEF Cairo Country Office (CCO) started becoming actively involved in drinking water supply programmes in 1981.

B. Why Self-Contained Systems (SCS) and Deep Hand Pump (?)

The present, ongoing, drinking water supply project of Upper Egypt came as a result of numerous field trips to the remote areas of Upper Egypt, technical survey of existing schemes, discussions with local officials and technicians, and villagers' response in general.

The idea of promoting Self-Contained Water Supply Systems (SCS) and Deep Hand Pumps(India Mark-II), in UNICEF supported drinking water supply project of four Governorates of Upper Egypt, comes as a result of athorough screening of technical solutions used in old existing water schemes, analyses of conventional - hand pumps in use presently, and a study of socio-economic aspects as well.

It has been found that large existing water supply schemes are technically over-complicated and suffer from numerous malfunctions, subject to the necessity of constant maintenance, difficult to handle and being over-expensive. Furthermore, the initial capital cost of the old water schemes was usually very high running into several millions of pounds in some instances.

Moreover, to assist the smaller communities, mainly the satellite villages, where the investment for setting up one SCS would not be financially justified, led to the experiments and introduction of deep hand pumps, India Mark-II for the first time in Egypt.

I. BRIEFLY ABOUT SCS

A. SCS Components

One self-contained drinking water supply system (SCS), see drawing 1, consists of the following:

1. One Productive Water Well drilled and properly equipped with necessary lengths of casings, screens and gravel pack see drawing 2; or with double wall screens + casings. Such water well is thereafter a permanent source of safe drinking water.

2. One Submersible Pump installed in the water well, as above, and electrically operated, see drawing 2. By this pump, water is being pumped from the water well to the elevated water tower.

3. Water Tower is an elevated water container, wherefrom water flows simply by means of gravitation through a distribution network to the taps of standposts conveniently

located throughout the village(s). Typical water tower being presently erected by UNICEF is shown on drawing 3.

4. Distribution Network consists basically of galvanized pipes diam. 4" and 2" properly connected and laid down, see drawing 4. The average length per one system is 2,000m. of pipelines of both diameters. This depends on the size and shape of the beneficial village(s).

5. Standposts through their water taps, finally make safe drinking water available to the end consumer - inhabitants of satellite villages of Upper Egypt. Typical standpost is shown on the drawing 5.

B. First Experience

The first "Pilot SCS" was set up in El Barahma village unit, Qift District - Qena Governorate, at the end of August 1981, covering three small villages with a population of over 3,000 inhabitants.

The first SCS is working ever since, 43 months now, without a single malfunction. It is worth knowing that from the very first day of its working life, this SCS is being operated by the villagers only. From November 1983, another village of around 1,200 inhabitants was connected to this "Pilot System".

III. BRIFLY ABOUT DEEP HAND PUMP, INDIA MARK - II

A. Main Components of the Pump

India Mark II deep well hand pump was chosen to replace the conventional (local) hand pumps for various reasons; one of them is its simple design, The components of each hand pump are listed herebelow, with a brief description, to show how this new hand pump looks like (see drawing 6).

1. Pump Body:

This deep hand pump consists of 3 major components:

1.1 Pump head assembly made of steel structure fully galvanized with additional coating from inside. For the easiness of transportation and packing, it is devided into 3 sub-assemblies (head-water tank-pedestal). It can easily be assembled.

1.2 Cylinder Assembly: is made of cast iron equipped with brass liner (piston), 2 valves, buckets made from special leather. The cylinder function is pumping the water up into the raising main by stroking the liner up and down.

1.3 Raising pipe & connecting rods: are made of galvanized pipes, the rods of galvanized mild steel or stainless steel, equipped with threads couplings from both sides. Assembling can be done very easily using a set of tools delivered with the pump regularly.

2. Productive Well:

Inside which the pump is installed. Drilling of the productive wells within UNICEF project is being done, either by mechanical or manual way depending upon the nature of location. Designs of the water wells were made in accordance with the most recent developments in this field: casings & screens are made of P.V.C., the screen type is double-wall screen with a lot of advantages, to be mentioned later.

3. The Pump foundation:

Is made of plain concrete, the office design for the foundations in this project is circular type with a drainage channel towards the nearest natural drain (see drawing 7). Certain slopes are made to get the water out of the platform, in order to avoid stagnant water problems and creation of unhygienic environment around the pumps.

IV. UNICEF ASSISTED DRINKING WATER SUPPLY PROJECT TO UPPER EGYPT, INTRODUCING APPROPRIATE TECHNOLOGY: SCS & DEEP HAND PUMP

A. SCS Project Component

1. Background

Drinking water supply of Upper Egypt was envisaged and designed to porvide with safe drinking water the unserved satellite villages in the four Governorates of Upper Egypt (Assiut, Sohag, Qena and Aswan).

For some time, the Egyptian Government has been focusing its activities on improving community water supply situation, especially in the rural areas. Responding to the needs of the situation UNICEF geared its activities towards setting up the first "Pilot" Self-Contained Water Supply System (SCS) at El Barahma Local Unit in Qift District of Qena Governorate, in September 1981, utilizing its own funds. The success of this "Pilot Project", now 43 months operational without a single malfunction, encouraged UNICEF to design in cooperation with ORDEV, Drinking Water Supply Project of Upper Egypt comprising of 28 self-contained water systems in Stage-I, and 32 SCS in the Stage II.

In 1982 project documents for each concerned Governorate had been drawn up as a result of numerous discussions and cooperation on the line UNICEF - Governorates. These documents, apart of detailed specifications and plans of action, clearly outlined delegation of the responsibilities of each involved party and the breakdown on the financial inputs.

2. Start of Implementation

Implementation of the project stage I, started in Aswan in 1982 by drilling of new productive wells in Kom Ombo District, Aswan Governorate.

However, the project implementation was going very slowly due to many reasons to quote just a few:

- Unavailability of relevant funds in the Government's budget.
- Problems with drilling Contractors.
- Problems with the other various Contractors.
- Cumbersome procedures in tendering and evaluation of local bids.
- Procurement bottle necks, ... etc.

The Project went through rather slow implementation year 1983, but started to pick up momentum during the second part of 1984. Now in 1985, project is moving at an increased rate throughout the assisted areas.

It is expected that the whole (first) Stage-I will be completed before the end of 1985. Furthermore, drilling works belonging to the Stage-II started already.

3. Project Coverage & Present Situation

The final execution of the first project Stage-I will benefit the rural population of over 100,000 inhabitants in 52 villages of UNICEF assisted areas of Upper Egypt, Tables 1 & 2 attached, and map 1 show the project areas.

Out of 28 SCS nine (9) are presently operational and the rest 19 are expected to be operated before the end of 1985.

4. Cost of an Average SCS

Construction of an average SCS, as being presently setup throughout the project, implies the following tasks:

- Water well drilling with testing and installation of appropriate length of PVC casings & screens. The average depth is in the range of 45-60 mts.
- One submersible pump electrically operated and installed in the newly drilled productive well. Capacity of the pump is usually around 10L/Sec. Spare parts are provided with each pump installed.
- One metal water tower, capacity 25m^3, all locally manufactured, is erected in the vicinity of the productive well.

- Distribution network of approx. 2,000.0 mts of galvanized pipes is installed, usually the combination of 4" & 2".

- Numerious standposts conviniently located throughout the beneficial villages are being set up, as many as possible.

Table cost of one SCS, as above, is being presently U.S.$ 85,000.-

B. Hand Pump Project Component

The idea of this project component is provision of safe potable water to small rural communities with population around one thousand inhabitants by the use of simple and reliable hand pump, installed and maintained at a reasonable price. The implementation of the project started with an experimental phase to test and evaluate the chosen pump (India Mark II) technically, in the prevailing local conditions, with its social acceptability as well. This phase is being implemented into two stages:

Stage I: Started as early as Feb. 84 and envisaged the installation of 75 hand pumps at two Governorates (Aswan - Assiut). Ten (10) hand pumps were installed first at Aswan Governorate during the period February - March 1984 and ever since those pumps are operating without single malfunction observed. Quality of produced water was so appreciated that the office received numerous written requests from the nearby communities for more pumps. On April 1984, at Assiut, the project started by installing 65 hand pumps at two different districts. The response of the communities served was the same as in Aswan.

Stage II: Is planned to start soon, another 100 hand pumps will be installed within new areas of Qena and Sohag in addition to Assiut & Aswan. If the encouraging results of stage one are continuing in this stage too (scheduled to be completed first part of the next year), UNICEF Office will be ready to document

the findings and outcomes of this experimental phase in order to prepare a good base for the ambitious next phase which is: Production of this hand pump locally in collaboration with any interested Ministry, Agency or Local Authority.

V. ARGUMENTS BEHIND RECOMMENDATION FOR WIDE REPLICATION - AT THE COUNTRY LEVEL

A. Self-Contained Systems (SCS)

1. Why SCS ?

There are many advantages of the SCS against the old conventional water supply schemes ; herebelow will be listed only the most important ones, already proved by the work of the "Pilot" El Barahma SCS:

1.1 These systems are self-contained, it means they work independently, on their own, with no connection to any of the neighbouring water schemes. This fact has a particular weigh in Upper Egypt, where breakdwons and leakages of the large water schemes are the problems of day-to-day life. In short, malfunction of self-contained small systems affects limited population only, while malfunction of large water schemes affects the population of many villages or even districts.

1.2 Social acceptibility

Ownership's feelings are likely to be developed by beneficaiaries of the system. In time, they start feeling that system is a part of the village concerned. This is very important because failures of the large schemes are usually attributed to the population indifference towards the scheme and lack of care. Property feelings of villagers towards a new water supply system SCS should help greatly future life of the system. Operational experience from the first SCS of Al Barahma clearly supports this !

1.3 Quick Setting-Up: Every SCS can be set up in less than 2 months' time; a great advantage against large water schemes.

1.4 Submersible Pump is, as the name implies, submerged in the water well and there is no need for any pump chambers or houses on the surface (hence no cost for pump chambers involved). Furthermore, being down in the well, any possibility of accidental damage is eliminated. Not to mention sand, dust etc.

Preventive maintenance of a submersible pump (check up every 1-2 years), cleaning of a water tower (once a year) and occasional checking on the standposts is the most likely type of maintenance experted.

1.5 Maintenance of these systems is by far easiest compared to any other system operating in the area. Experience of El Barahma system clearly supports this. For pilot SCS is now over 43 months operating and still there is no need for any maintenance work.

1.6 No Need for booster pumps
Water is being distributed to the end user by simple means of gravitation from the elevated water tower .

1.7 Reasonable Low Cost and possibility to approach deprived villages, "one by one", instead of waiting for large funds in order to commence work of a big scheme. In this way even a small contribution can be quickly utilized for setting up of one SCS.

1.8 All the components of one SCS are made locally, except the submersible pumps.

2. Where SCS ?

- Self-contained Water Supply System (SCS) can be successfuly set up anywhere in rural, Egypt providing the underground water source (aquifer) is positive, in terms of water quantity and quality !

- It is especially recommended for the smaller comunities up to 10,000,- inhabitants.

B. Why India Mark II Deep Hand Pump ?

Hand Pumps are being used in rural areas all over Egypt now for a long time, and hence it is not a new technique. What was worrying, were the drawback associated with using the conventional (local) hand pumps, therefore, the idea of improving their performance had came up to eliminate the main following shortcomings:

1. The inefficient design of local hand pump which created problem of frequent maintenance and very short operational life.

2. Tapping of very shallow aguifers, with its bacteriologically polluted water, in the most cases.

3. Very low discharge rate, compared with manual efforts applied in pumping.

Due to the above general reasons, the India Mark II hand pump was introduced for the first time in Egypt bearing in mind the following advantages:

1.1 The simple design of the pump insures easy, trouble-free performance, long operational life and less manual effort required for operation. Designed operational life is 20 years (8 working hr/day).

1.2 The pump yield is much higher compared with that one of the local pump.

1.3 This pump can be installed to a depth down to 60 mts, which means using aquifers with the lowest possible chance for pollution.

Moreover

- Use of high quality and suitable materials guarantees long operational life and overcoming of undesirable mechanical drawback of the cast iron local hand pump.

- India Mark II hand pump, when set up on the properly executed foundation, eliminates the problem of unhealthy environment associated always with the local pump (water pools as breading ground for mosquitos, and flies).
- This hand pump is completely covered, to avoid possible contamination from any outside sources.
- The price of the pump itself is reasonable, approximately 300 U.S.$.

ATTACHMENTS

NO	DRAWINGS
1.	Schematic Representation of one Complete Self-Contained Water System (SCS).
2.	Water Well with Submersible Pump Installated.
3.	Water Tower 25 cu.m. capacity.
4.	Water Well - Water Tower connection with detail of pipe laying
5.	Standpost platform.
6.	Hand Pump body.
7.	Platform for hand pumps, with tool kit.

TABLES

1. SCS distribution - Stage 1
2. SCS distribution - Stage 1 detailed with all recepient villages.

MAP

1. Map of Egypt with UNICEF assisted areas.

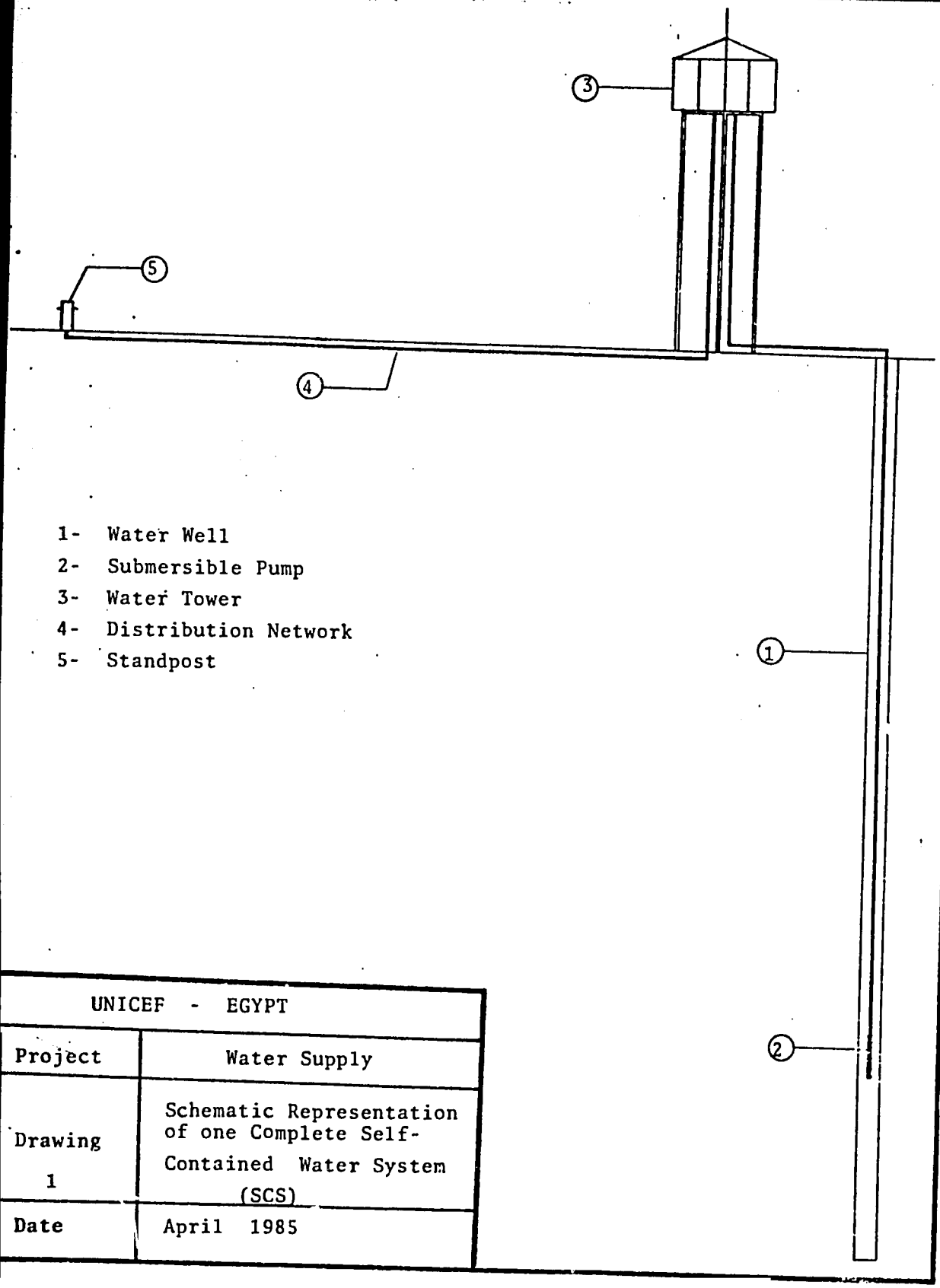

1- Water Well
2- Submersible Pump
3- Water Tower
4- Distribution Network
5- Standpost

UNICEF - EGYPT	
Project	Water Supply
Drawing 1	Schematic Representation of one Complete Self-Contained Water System (SCS)
Date	April 1985

1- Electrical cable
2- Cementing
3- Casing 10" or 8" diam.
4- Raising main
5- Water well
6- Filling material
7- Dry running protection
8- Submersible pump
9- Gravel pack
10- Filter
11- Bottom cap

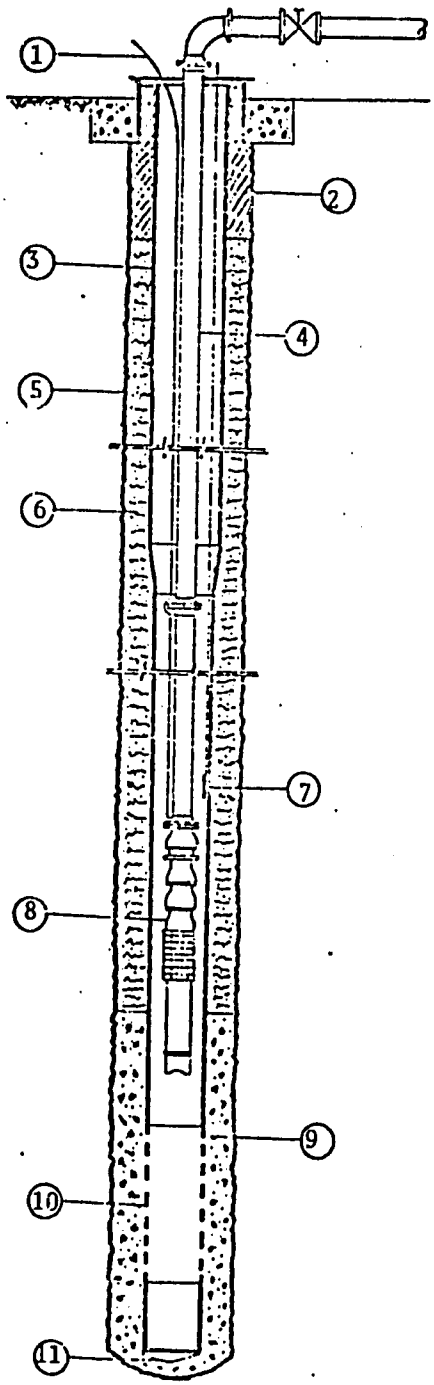

UNICEF - EGYPT	
Project	Water Supply
Drawing 2	Water Well with Submersible Pump installed
Date	April 1985

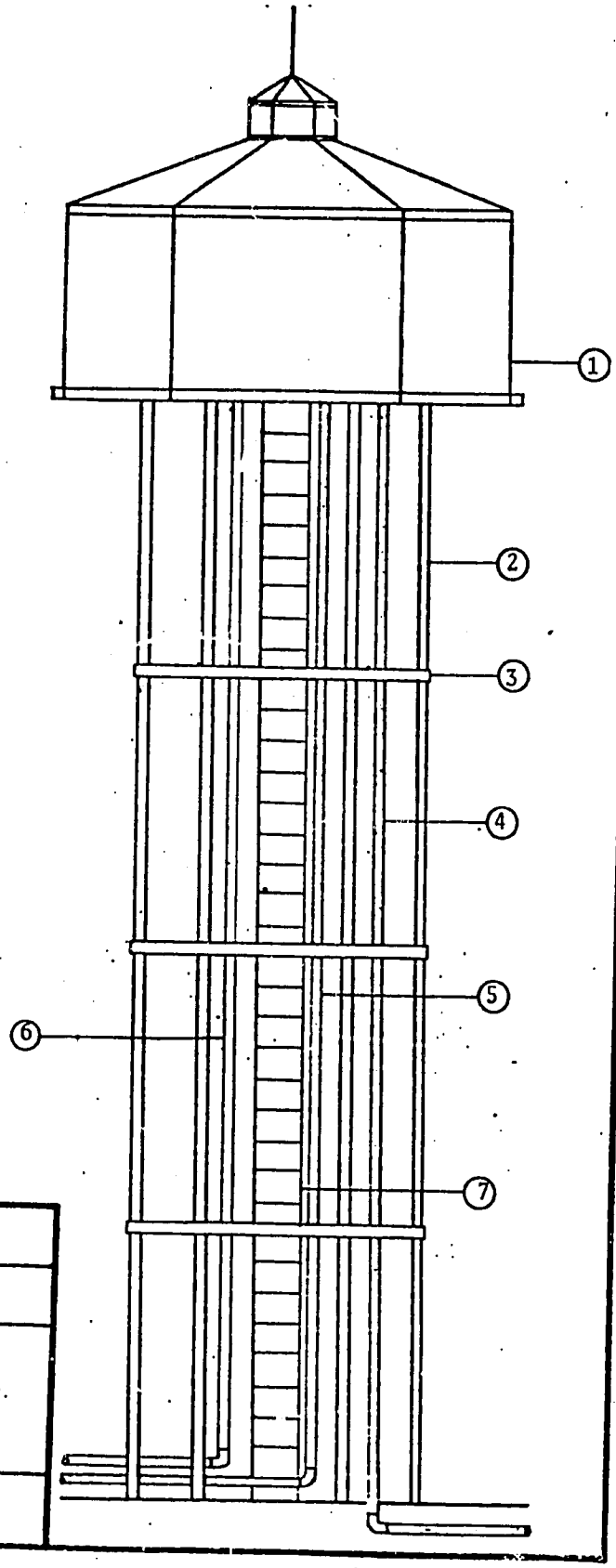

1- Water Tank
2- Tank Supports
3- Wind Bracing
4- Discharge Pipe
5- Filling Pipe
6- Over-Flow Pipe
7- Ladder

UNICEF - EGYPT	
Project	Water Supply
Drawing 3	Water Tower 25 cu.m. Capacity
Date	April 1985

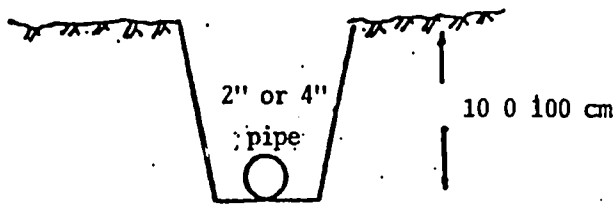

PIPE LAYING

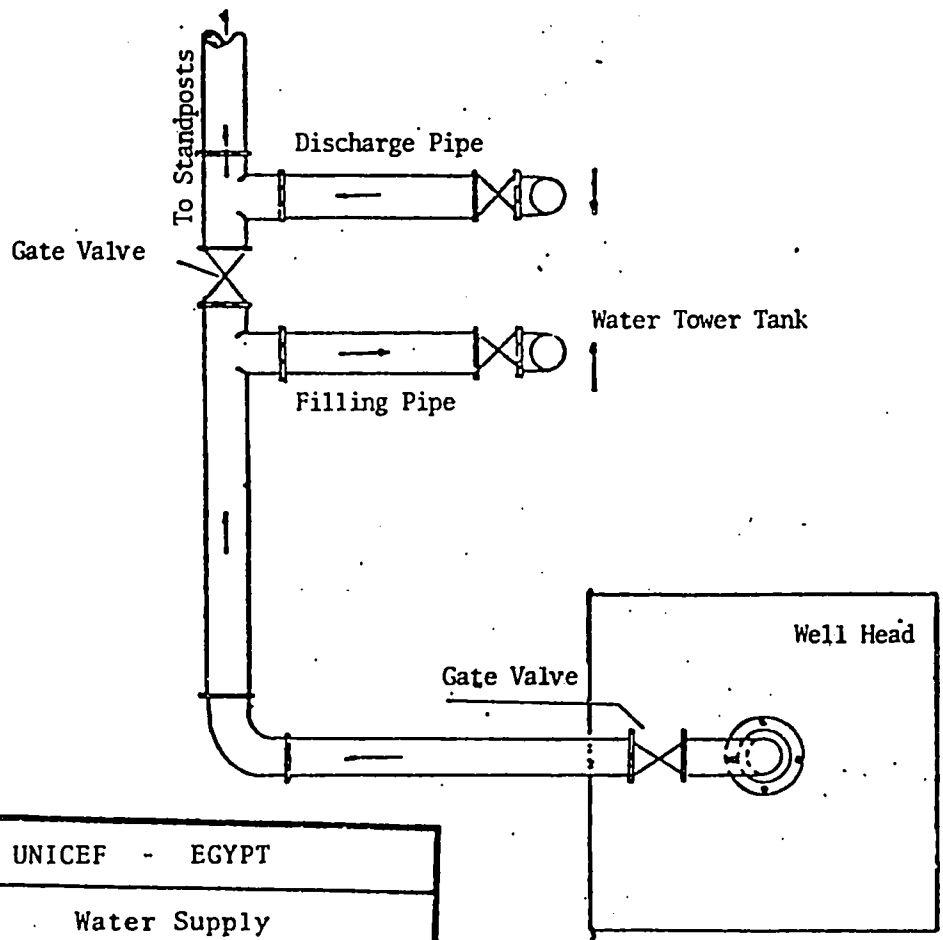

UNICEF - EGYPT	
Project	Water Supply
Drawing 4	Water Well - Water Tower Connection with Detail of Pipe Laying
Date	April 1985

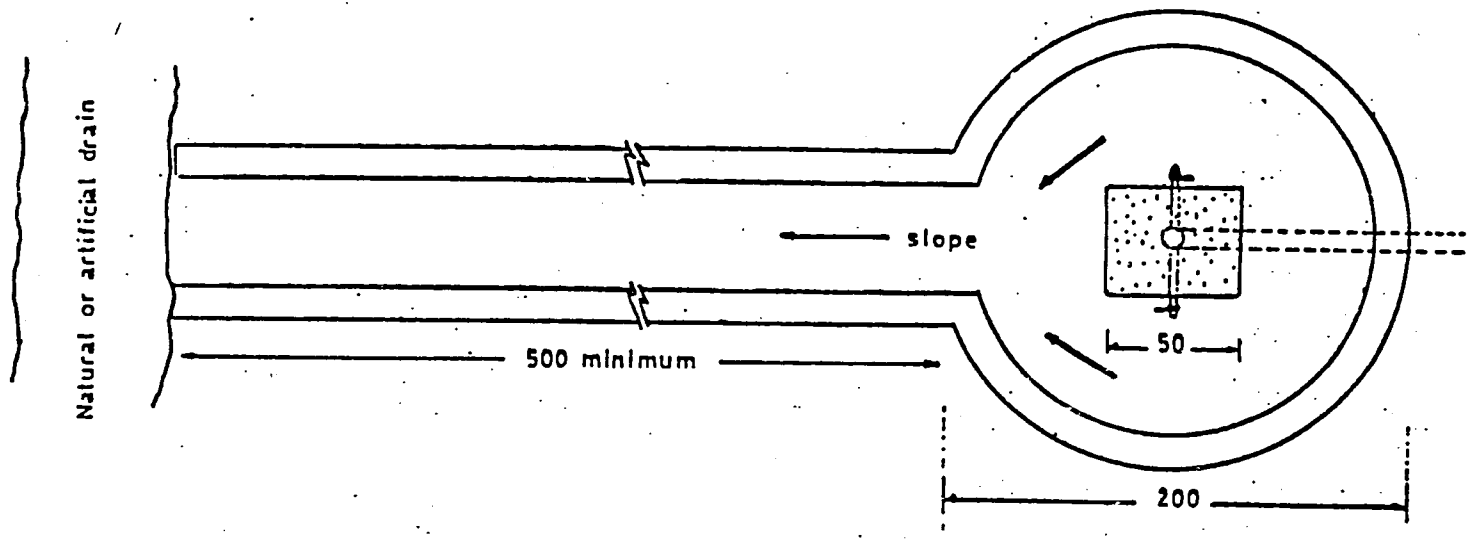

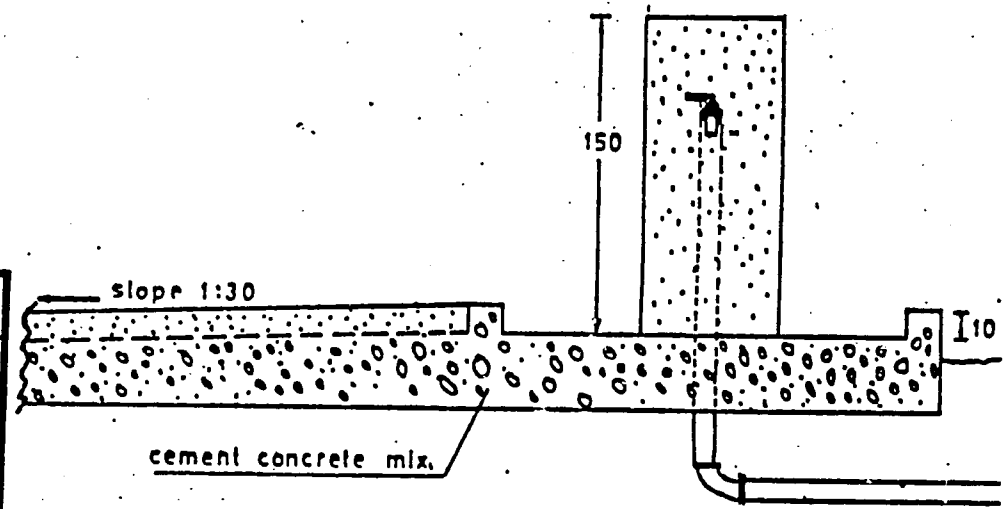

UNICEF - EGYPT	
Project	Water Supply
Drawing 5	Standpost Platform
	[illegible] 1985

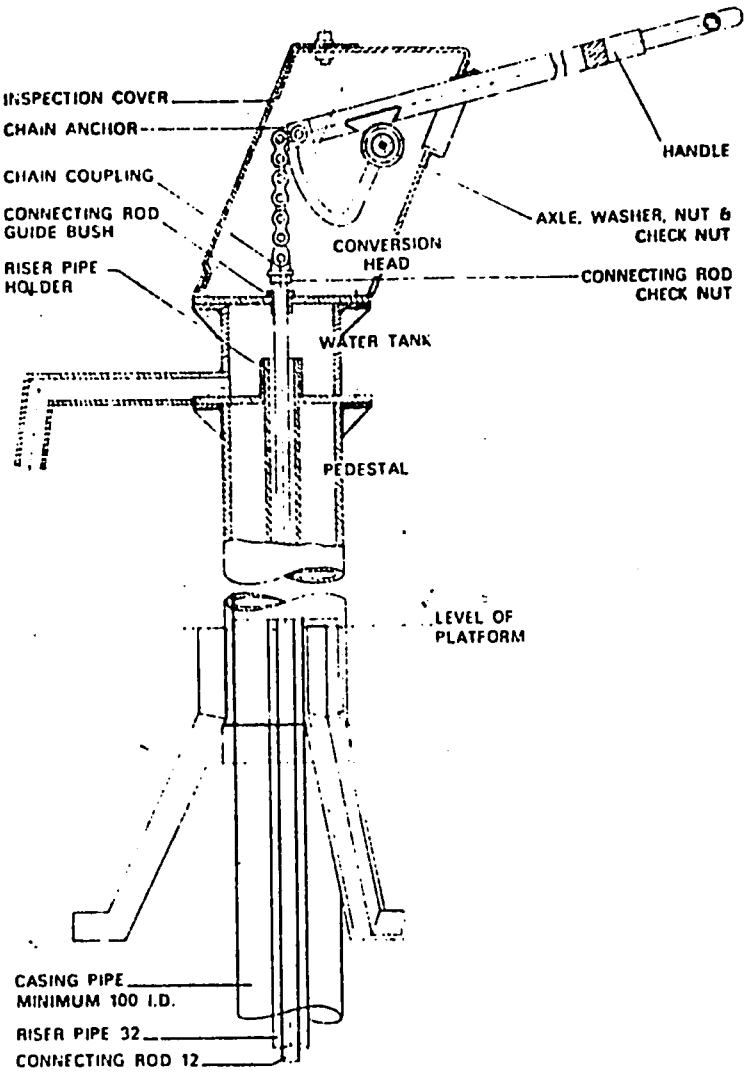

UNICEF - EGYPT	
Project	Water Supply
Drawing 6	INDIA MARK II HAND PUMP
Date	April 1985

SPECIAL TOOL KIT

Seven special purpose tools have been designed for ease of installation and maintenance of this pump. These are :

1. Lifting spanner (set of 3 Nos.)
   —Use to lower or lift the rising main pipe.
2. Lifter pipe - 1 No.
   – Use to lower or lift the water tank and rising main together.
3. Crank spanner (17 mm x 19 mm) (set of 2 Nos.)
   —Use for tightening and loosening of flange bolts, check nuts and chain anchor bolt.
4. Connecting rod vice - 1 No.
   —Use to clamp the connecting rod before you cut or thread the rod.
5. Connecting rod lifter - 1 No.
   — Use to lift connecting rod to test pumping action.
6. Axle Punch - 1 No.
   —Use to drive axle out of the bearing without damaging axle threads.
7. Heavy Duty Clamp - 1 No.
   —Use to lift or lower rising main pipe and connecting rod.

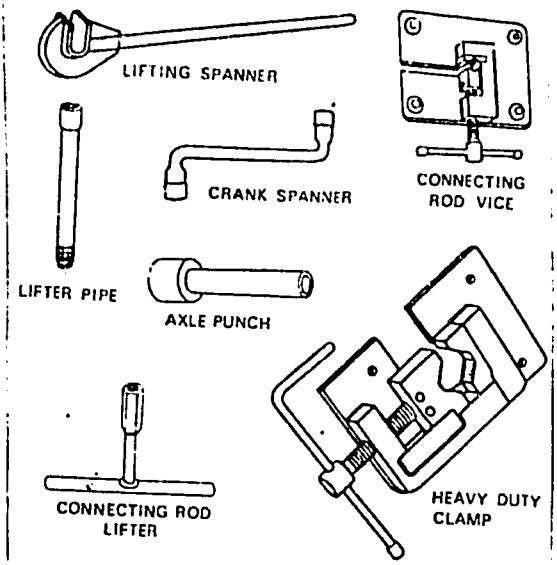

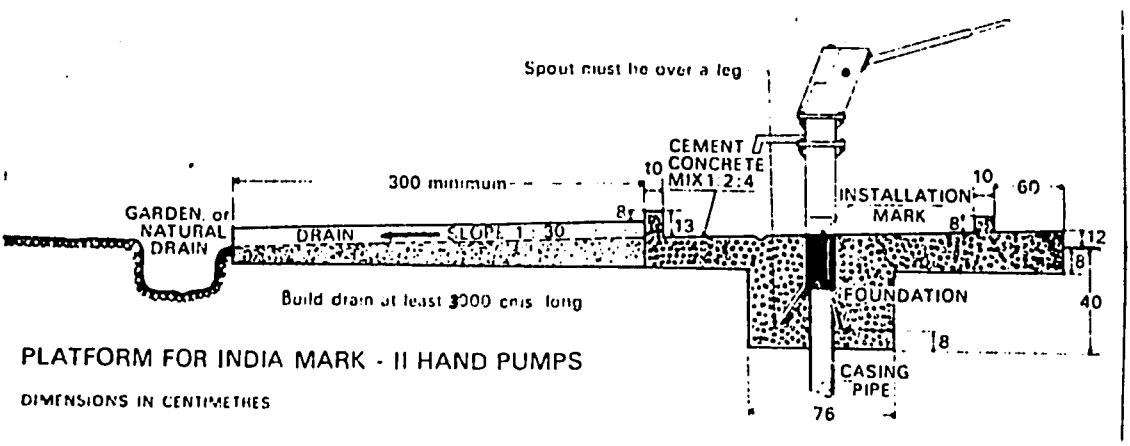

PLATFORM FOR INDIA MARK - II HAND PUMPS

DIMENSIONS IN CENTIMETRES

UNICEF - EGYPT	
Project	Water Supply
Drawing 7	Special Tool Kit and Platform for India Mark II Hand Pump
Date	April 1985

UNICEF Assisted
Drinking Water Supply
& Sanitation Project
of
Upper Egypt

TABLE 1

DRINKING WATER SUPPLY PROGRAMME

SELF CONTAINED WATER SYSTEMS (SCS)

STAGE I

(28 SCS)

Governorate	SCS No.	SCS Village Location	Village No.	Recepient Village
ASSIUT	1	AL KHALIFA	1	AL KHALIFA
(Total SCS =8)	2	AL HANI	2	AL HANI
	3	ABU AMIRA	3	ABU AMIRA
	4	AL SHEIKH SAAD	4	AL SHEIKH SAAD
	5	MOHAMED KHALIL	5	MOHAMED KHALIL
			6	HASSAN ATTIA
	6	NAZLET AL QANTARA	7	NAZLET EL QANTARA
	7	MAHMOUD FARAG	8	MAHMOUD FARAG
			9	EZBET KHALIFA
			10	EZBET EMARA
	8	AL ZIHNI	11	AL ZIHNI
SOHAG	9	AMIR HAMED	12	AMIR HAMED
(Total SCS = 6)			13	KOM EL ARAB
			14	NAG SAID
			15	NAG ABU ZEID
	10	GZ. TEMA	16	GZ. TEMA
	11	AL GENIENA	17	AL GENIENA
			18	NAG EL MANSHIA
			19	NAG EL HALAQI
	12	UMRAN KHAMIS	20	UMRAN KHAMIS
			21	NAG EL SUQ
			22	NAG ATTIA MOUSA
			23	NAG SAAD
			24	NAG ARAB EL-AMAYIM
	13	AL KHARAT	25	AL KHARAT
			26	BERAM
	14	ABU SHUSHA	27	ABU SHUSHA
			28	NAG SHAQAL
QENA	15	AL URG	29	AL URG
(Total SCS = 6)	16	AL KOLA	30	AL KOLA
			31	NAG MAHROUS
			32	NAG HAMED MOSTAFA
			33	NAG SALEH
			34	NAG DAMOUD
			35	NAG EL ZAMLY
			36	NAG MOAHAD
			37	NAG OSMAN
			38	NAG HASSAN MANA
			39	NAG EL ELIQI
	17	AL KOM	40	AL KOM
	18	AL EDMA	41	AL EDMA
	19	AL KALAHIN	42	AL KALAHIN
	20	AL HEGIRI	43	AL HEGIRI
ASWAN	21	AL HAGER	44	AL HAGER
(Total SCS = 8)	22	AL DAHSA (BAHARI)	45	AL DAHSA (BAHARI)
			46	AL DAHSA (QIBLY)
	23	AL SHROUQ	47	AL SHROUQ
	24	FARIS	48	FARIS
	25	AL DAMA	49	AL DAMA
	26	SABIL MAKI	50	SABIL MAKI
	27	AL FOADIYA	51	AL FOADIYA
	28	EZBET EL ARAB	52	EZBET EL ARAB

TABLE 2

UNICEF Assisted
Drinking Water Supply
& Sanitation Project
of
UPPER EGYPT

DRINKING WATER SUPPLY PROGRAMME

SELF CONTAINED WATER SYSTEMS (SCS)

STAGE I
(28 SCS)

Governorate	District	Village Unit	SCS No.	SCS Village Location
ASSIUT	ABNOUB	BANI ZIED	1	AL KHALIFA
(Total SCS = 8)	(Total SCS = 5)		2	AL HAWI
			3	ABU AMIRA
		AL MAABDA	4	AL SHIEKH SAAD
			5	MOHAMED KHALIL
	AL BADARI	AL UQAL (Q)	6	NAZLET AL QANTARA
	(Total SCS = 3)	AL NAWAWRA	7	MAHMOUD FARAG
			8	AL ZIHWI
SOHAG	TEMA	MESHTA	9	AMIR HAMED
(Total SCS = 6)	(Total SCS = 6)	SALAMUN	10	GZ. TEMA
		UMM DOMA	11	AL GENIENA
			12	UMRAN KHAMIS
		AL MADMAR	13	AL KHARAT
			14	ABU SHUSHA
QENA	QIFT	AL BARAHMA	15	AL URG
(Total SCS = 6)	(Total SCS = 6)		16	AL KOLA
		AL SHAYKHIYA	17	AL KOM
			18	AL EDWA
			19	AL KALAHIN
		AL QALAA	20	AL HEGIRI
ASWAN	KOM OMBO	EQLIT	21	AL HAGER
(Total SCS = 8)	(Total SCS = 8)		22	AL DAHSA
			23	AL SHROUQ (BEIDA)
			24	FARIS
		AL KUFUR	25	AL DAMA
			26	SABIL MAKI
		AL MANSHIYA	27	AL FOADIYA
			28	EZ AL ARAB

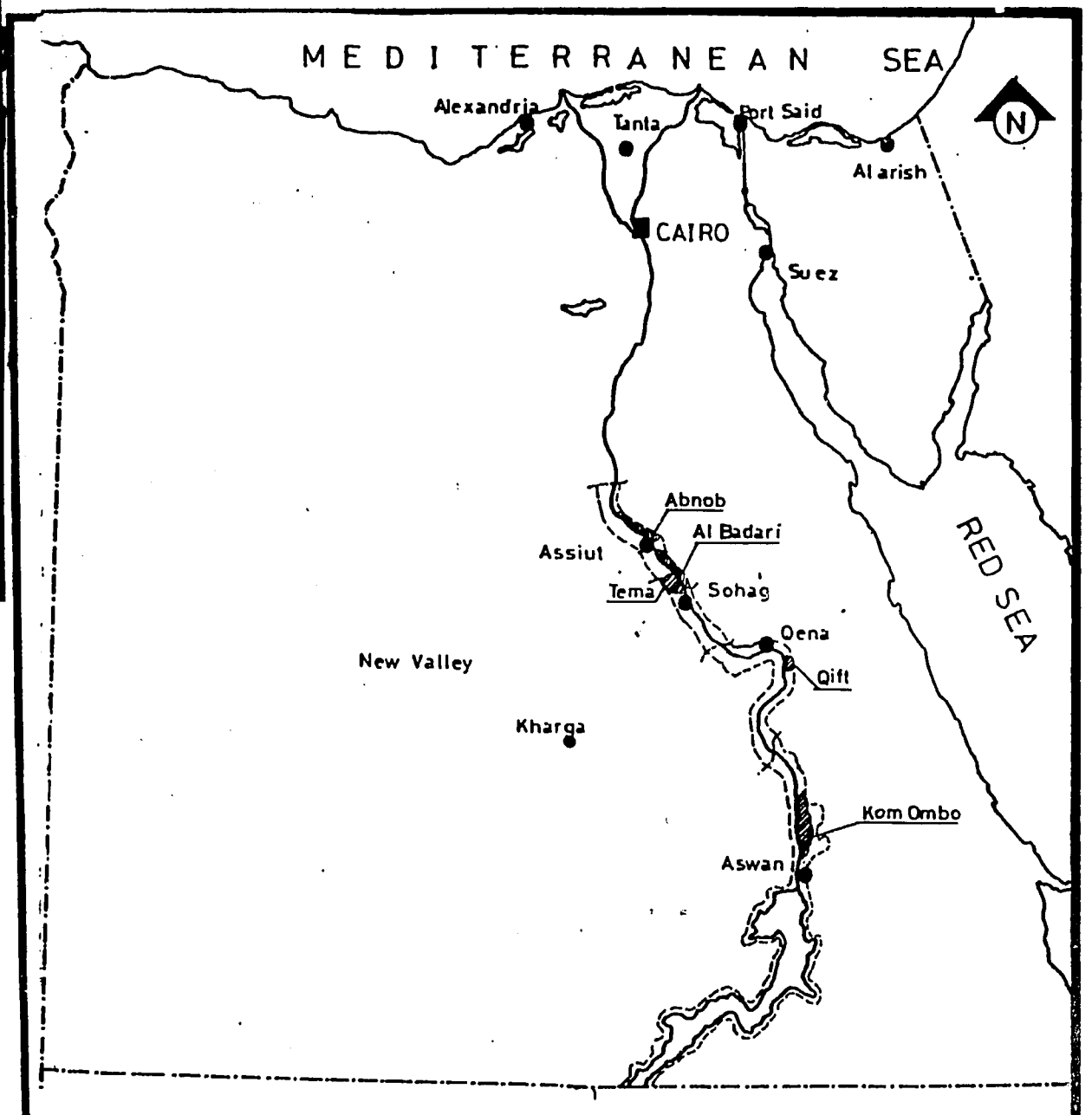

UNICEF - EGYPT	
Project	Drinking Water Supply Project of Upper Egypt
Map	A.R.E.
Date	April 1985

Districts Assigned for UNCIEF

MINISTRY OF HEALTH
ARAB REPUBLIC OF EGYPT

EASTERN MEDITERRANEAN REGIONAL OFFICE
WORLD HEALTH ORGANIZATION (EMRO/WHO)

UNITED NATIONS DEVELOPMENT PROGRAMME
EGYPT (UNDP) (UNICEF)

Second National Conference
on the
Sector Progress and Needs
of the
International Drinking Water Supply
and Sanitation Decade (IDWSSD) in Egypt

16-18 April 1985

MANPOWER DEVELOPMENT AND TRAINING CONCEPTIONS FOR THE GENERAL ORGANIZATION FOR GREATER CAIRO WATER SUPPLY

By

GENERAL ENGINEER KAMAL EL DIN HEGAB
Acting Chairman, GOGCWS

I. Introduction

The General Organization for Greater Cairo Water Supply (GOGCWS) is responsible for supply of potable and non-treated industrial water to the residents and industries within Greater Cairo metropolitan area. The Organization presently provides water to some 8 million residents or about 75% of the city's population. The Nile River is the principal source of water, and twelve filtration plants are operated along its 42-kilometer reach within the service area. Some 3800 kilometers of transmission and distribution lines area are also operated and maintained by GOGCWS. Management, operation, and maintenance of the GOGCWS facilities is in the hands of some 9,500 employees.

The manpower distribution, which is relative to education, follows the pattern:

Professional	6%
Subprofessional	24%
Skilled Labor	44%
Unskilled Labor	26%
	100%

and this is the typical distribution trend of manpower in a water supply enterprise in a labor-intensive country.

Whereas education is usually related to mind development through public schools, training is skill development relative to occupation. There are some six levels of training needs, viz:

	Knowledge Level	Example
1	Basic skills	Water and wastewater
2	Craft Specific	Potable water supply
3	Sector specific	Surface water supply
4	System specific	Water treatment
5	Organization specific	Roda Waterworks
6	Plant specific	Filter operation

Whereas training at the first four levels may be accomplished with generalized materials, specific training material must be developed in-house for the final two levels.

II. Reasons for Training

It is well known that, in the past, capital improvements in developing countries were not accompanied with the manpower development required to effectively operate and maintain these improvements. Therefore a most definite need exists to train the personnel responsible for management, operation and maintenance of water supply enterprises in all developing

95

countries such that the true investment value of their systems may be realized.

Another important reason for training is that the constant technological and social changes taking place require that people must adapt to new situations more quickly than ever before. Coincidentally, once people realize that new techniques and innovations are to be a part of their work routines, they become more willing to learn.

III. Trainee Selection

Training must eventually touch all levels and disciplines of personnel within GOGCWS. For example, management must learn concepts concerning delegation of authority and water treatment plant personnel must learn proper method of chlorine storage and handling.

The initial training plan for GOGCWS offers six courses for management/administrative personnel, seven courses for planning and engineering personnel, eleven courses for stores and maintenance personnel, and eight courses for water supply and distribution personnel. Therefore trainees may be selected from any of GOGCWS' divisions. Supervisor-level personnel would constitute the first training classes with the prospect that the best suited of these trainees would become trainers for subsequent classes.

IV. Training Spectrum

The Organization's structure is divided into two primary divisions: Administrative and Technical. Training is necessary at all levels in both divisions. For new hires, it is recognized that training should begin the first day on the job. Training must be continuous for all employees; not only skills training, but training in job duties, department organization, GOGCWS policies, safety, work standards, etc. Present staff personnel and newly promoted or transferred personnel must also receive training in their present or new positions in order to maximize their work efficiency.

V. Kinds of Training

Often it is believed that training and explaining are the same thing. To explain the operation of a filter bed would not be sufficient to permit a person to start operating the filter control valves. Also, a person may understand that a rate control valve is part of the filter system yet they cannot locate the valve, let alone service it.

There are three kinds of training:

- Theoretical training, which is purely a mental activity in that it only presents the background and theory

86

of a process or activity.

- Practical training, which is largely a mental activity but it goes beyond the bounds of theory to practical application. However it is still "book-learning" only.

- Skills training, or "hands-on" training which involves actual performance of the activity repeatedly until the manual skill is developed to match the mental knowledge.

The GOGCWS core curriculum courses offer a combination of all these types of training. It is recognized that the greater the degree of involvement by the trainee the more beneficial the course will prove to be to that trainee, and to GOGCWS.

The need for skills training exists in both the Administrative and Technical divisions of GOGCWS, although the actual implementation of the respective training may differ markedly. For instance, skills training for construction inspectors is quite different from that for billing clerks; yet the respective skills training is mandatory.

VI. Training Methods

Training may be presented in either of two basic methods: formal, structured training or informal training. These may be discussed more specifically.

Formal training may be presented in either a one-on-one situation or by the method of group training. The selection of which approach to use depends upon the number of the trainees involved, the time available, the facilities on hand, and the respective subject matter. Learning is most effective when it stimulates the greatest number of the human senses of sight, sound, smell, and taste. Training media are used to stimulate these senses. With formal instruction there is usually a means of evaluating the trainees' progress through the course.

The most frequently used training media include lectures, slide-tape shows and filmstrips, movies, videotapes, manuals or books, and computer-aided instruction. The GOGCWS training plan considers the use of lectures, slides, movies and course manuals.

Informal training may be conducted via seminars, workshops, demonstrations, site visits, and individual research. Audio-visual aids may be incorporated in certain of these efforts. Usually there is no means of evaluating the impact of the session on the trainee, therefore their true value may be quite variable and inconclusive.

91

VII. Training Centers

The Organization plans to develop two training centers. Space will be allocated in the GOGCWS headquarters building for training administrative personnel and possibly certain technical personnel - such as for planning and research staff positions. All other technical personnel would be trained at one of the existing maintenance centers where facilities can be developed.
The training Department staff will be expanded to include translators, typists, graphic artists, draftsmen, printers, course development personnel, record clerks, and trainers. The task of preparing training manuals and materials into Arabic language is formidable: the initial training plan necessitates the translation of some 18,000 pages of text a 27 man-year task.

As a pure lecture appeals to only the sense of hearing it is not the most successful training medium. Therefore visual aids are valuable supplements to a lecture. Graphic artists and draftsmen are needed to prepare appropriate flip charts, transparencies for overhead projectors, and color slides to accompany the lectures.

Personnel are needed to record and evaluate the training results. Personnel are also needed to determine what new courses should be added to the curriculum. The latter group will then obtain appropriate reference material for course development, assemble the lesson plans from this material and then turn it over to the translators, typists, artists and printers for final preparation of the course manuals.

The trainer or instructor staff should develop from supervisor-level personnel now employed in the various departments of GOGCWS. The potential trainers will be trainees initially and those with the best grasp of the subjects and courses, plus the necessary desire and personality trainers. Training Department management will monitor the subsequent trainees' evaluation of these trainers to determine which instructors become part of the permanent training staff.

The initial training core curriculum offers 32 varied courses, which are listed on Table 1, appended. The self-study time varies for each course from 10 hours to 122 hours. The lecture and skills training time would be in addition to this self-study time.

Training evaluation is important to determine the difference in the employee's knowledge and performance before and after training. Several methods are available to perform

98

such evaluation, including:

- Pretest/post-test, which evaluates the trainee's improvement in knowledge through his/her training.

- On-the-job evaluation, which is best accomplished by use of employee rating forms which give weighted performance values to the employee's work tasks, as per his/her job description.

- Questionnaires, which provides the trainees a means to voice their opinions on the course completed and the training program in general.

It is a matter of pride to most individuals that they have some token indicating their accomplishments. Therefore all trainees will receive Certificates of Completion for each course successfully completed.

VIII. Training Planning

The training Department Manager will assigned to the Organization's Planning and Research group. In this position he will receive first-hand input regarding both immediate and future training needs. He will pass down this input to the Training Department staff, who are subordinate to Personnel Affairs, for follow up, development and implementation.

IX. Incentives

Research shows that adults seek out structured learning situations two or three times each year, indicating that adults want to learn, and perhaps even enjoy learning. Therefore the incentive to learn already exists within every potential trainee, and this has been verified by previous polls taken in the Egyptian water and wastewater sectors.

Many people enjoy the feeling of passing on knowledge to others not quite at their peer level. There is a certain boost that becomes from being the center of attention, surrounded by those dependent on the instructor. And there is a deep sense of pride to an instractor when they can see trainees absorb and express knowledge. Such are the incentives to the trainers.

X. Libraries and References

The training Department will develop a library of course development material specific to the course subjects. The initial material will consist of some 160 lesson manuals, text books and manuals of practice with appurtenant audio tapes, and 35 mm slides were applicable. Later, sector-specific

films can be added, but Arabic soundtrack dubbing will be required. Table 1 indicates the relative purchase cost of the course development material for the initial core curriculum.

XI. Overseas Training

Overseas training can take on any of several formats.

- In certain instances personnel go overseas and work one-on-one with foreign counterparts. This is undoubtedly the most meaningful experience provided the equipment and methodology used overseas may be employed in the home country.

- Attendance at overseas short-courses, seminars and conferences are helpful, however there is no way to evaluate the effectiveness of these experiences on the attendees.

- Site visits may be made to overseas water treatment plants to observe operational techniques and problems. Again, these plants should use the same methodology as the plants existing or being considered in the home country.

In the past years, a number of GOGCWS management and supervisory-level personnel have had the opportunity to travel overseas to broaden their knowledge and experience. As a part of the Organization's current institutional development project, ten staff members will visit the United States later this year where they will attend the American Water Works Association annual conference, and spend approximately three weeks observing equipment and practices appropriate to their relative positions. These personnel expect to be familiarized or broadened on the subjects of pre-investment planning, distribution network hydraulic analysis, design standards, construction specifications, construction inspection, water utility accounting, purchasing, and records and data systems. Exposure to these subjects will be via ad hoc discussions in both consultant and utility offices.

Certain requirements and restrictions are appurtenant to such overseas trips. It is of primary importance that the person or persons making the trip be well suited and qualified for the particular program. Competence in English or other host-country language is mandatory, especially in consideration of many technical speakers' fondness for the use of uncommon words. Dedication to GOGCWS must also be unswerving such that the trainee will not abandon the Organization for more profitable employment soon after return from overseas. Failure of the overseas trainee to qualify in all of the criteria will result in both wasted time and money, for the Organization and the funding agency.

XII. Conclusion

It is recognised that the efforts which must be expended to initiate and maintain a viable formal training program within GOGCWS are tremendous. Fortunately they are not insurmountable. At this time it is believed that the program can be in initial operation with certain basic core curriculum subjects within two years, and that the entire core program will be viable in five years.

The goal of training is to improve the efficiency of GOGCWS management, operations and maintenance functions. Normal attrition mandates that at least 400 new employees be trained every year, in addition to the training which must be given present employees. Therefore there can be no "overnight" results and improvements. However, with dedication by all concerned with this program the Organization should witness marked improvements within the next decade.

91

TABLE 1

Training Core Curriculum

Course No.	Course Description	Material Cost (US$)
101	Management and Supervision	667
102	Special Management Problems	117
111	Office Automation	106
121	Water Utility Accounting	126
131	Financial/Administrative Planning and Control	122
141	Fundamentals of Training	30
201	Pre-Investment Planning	-0-
211	River Water Quality Monitoring	28
212	Water Quality Analyses	73
221	Construction Inspection	49
222	Safety Practices	116
231	System Mapping and Records	24
232	Records Filing and Control	-0-
301	Material Handling and Storage	5
311	Rigging and Installation	68
321	Maintenance Management for First-Line Supervisors	284
331	Mechanical Maintenance	376
332	Mechanical Maintenance Applications	174
341	Maintenance Welding	118
351	Electrical Maintenance	412
361	Industrial Electronics	143
371	Instrumentation and Process Control	266
381	Buildings and Grounds Maintenance	171
382	Custodial Maintenance	75
401	Water Supply and Transmission	45
411	Water Treatment Technology and Practices	143
412	Specialized Water Treatment Technology	223
413	Chlorination Systems and Chlorine Handling	24
421	Distribution System Fundamentals	24
422	Operational Techniques for Distribution Systems	63
431	Water Meters and Service Connections	32
441	Radio Communication	5
	TOTAL COST	$4,109

MINISTRY OF HEALTH
ARAB REPUBLIC OF EGYPT

EASTERN MEDITERRANEAN REGIONAL OFFICE
WORLD HEALTH ORGANIZATION (EMRO/WHO)

UNITED NATIONS DEVELOPMENT PROGRAMME EGYPT (UNDP)

Second National Conference
on the
Sector Progress and Needs
of the
International Drinking Water Supply
and Sanitation Decade (IDWSSD) in Egypt

16-18 April 1985

MANPOWER AND TRAINING ISSUES IN MEETING THE GOALS OF THE IDWSS DECADE

By

PROFESSOR HASSAN MITWALLY PH.D.
Professor of Sanitary Engineering,
High Institute of Public Health,
Alexandria University

Presented to the Second National Conference
on Development of International Drinking Water
Supply and Sanitation Programs,
WHO, EMRO, April 1985

93

INTRODUCTION

The aim of this paper is to evaluate the technical man-power training needs for water, wastewater, and industrial waste systems to cope with the present and future local requirements till the end of this century. The type of the personnel needed for a comprehensive treatment of such sanitary project include a broad range of individuals with different educational backgrounds and levels. The training needs are both broad and massive in number ranging from doctorate candidates to those who perform simple skilled functions. The key idea of Egyptians training Egyptians should be the goal of any proposed educational and training programs.

EXISTING SITUATION

About 100 water treatment plants and wastewater treatment systems exist locally. They are operating in an inadequate fashion which might allow millions of cubic meters of water per day not to be treated as it should be and rely upon chlorination as a factor of safety. Also, other millions of cubic meters per day of untreated or poorly treated wastewater flow to farms, drains, canals, the River Nile, the Red Sea, and the Mediterranean Sea.

Various systems suffer from both operational and personnel deficiencies that are well known to relevant authorities. The periodic outbreaks of diseases related to untreated wastewater or poorly treated potable water, the frequent appearance of backed-up wastewater in city streets and the poor public health condition in many rural and urban communities, are clear indications of the substantial environmental deterioration that essentially needs quick mending.

Water supply system have been developed at a rate far exceeding wastewater ones. With a relatively high population

growth rate, a trend toward urbanization, and marked industrialized development associated with more water consumption and its corresponding pollutional loads, the situation may be aggravated unless an immediate country-wide program of manpower development is initiated. Various treatment plants, laboratories, collection systems, distribution networks, and other facilities suffer from inadequate and inefficient capabilities and skills.

Water and wastewater technology cannot be transferred without the corresponding transfer of human skills via needed education and proper training.

Building of new cities remains a valid solution to the increased overloading now experienced in major cities and will require additional water and wastewater systems with their operation and maintenance schemes. Without better manpower development,

94

the new cities could produce more poorly treated water and wastewater adding to existing problems.

MANPOWER

The manpower working in all urban, provincial, and industrial water supply and wastewater systems all over the country have been estimated for 1980 and projected for 2000 to be as shown in table (1). Categorial distribution of manpower working in the General Organization for Sewage and Sanitary Drainage in Cairo "GOSSD" which could be taken as an example for manpower distribution in other systems, is shown in Table (2). The breakdown resulted from this distribution showed that approximately 2.5% as civil, mechanical, and electrical engineers, 0.2% as chemists, while technicians, plant operators, and sanitarians are 6.5%. Such break down could be taken as a guide for other systems despite the relatively shortage of engineers presently faced.

The training needs for such personnel may be broken down into six major areas as follows:

1. Managers and administrators of water and wastewater systems.

2. Waster distribution wastewater collection personnel "Engineering and sanitarians".

3. Plant operational personnel "engineers and chemists".

4. Plant maintenance crew "engineering and plant operators".

5. Engineers and sanitarians working in local governorates.

6. Laboratory staff "chemists, biologists, and technicians".

As shown in Table (1), the current water supply and wastewater systems in Egypt have 50,000 workers. This figure is expected to reach 80,000 by the year 2000. After many years of limited expenditure, it is expected that the country will spend by that time about ten billion pounds (LE 10,000,000,000) on building projects for Cairo, Alexandria, Canal Cities, Upper Egypt, and Lower Egypt Governorates in addition to the industrial waste treatment requirements. Huge construction works are now under way in major cities. This means, in short, that new complex systems are now being designed for domestic and industrial water and wastewater which will require qualified managers and operators in the immediate future.

The current training activity is a part of these large investments. It goes without saying that all engineers in any project, regardless their background should be trained in sanitary engineering to be sure that they possess the capabilities of operating and managing the projects should for which they are responsible. For the current 50,000 workers, the 2.5% who are engineers, suggest there should be 1250 engineers who have to master the

sanitary engineering speciality. Actually, only about one tenth of these are specialized in sanitary engineering and possess the capabilities of operating and managing the projects for which they are responsible. The current 50,000 workers of whom 2.5% are engineers, suggest there should be 1250 engineers who have to master the sanitary engineering speciality. Actually, about one tenth of this figure is specialized in sanitary engineering either academically or professionally; a case which has its effect on operation and maintenance of local projects.

EDUCATION AND TRAINING PROGRAMMES

The only regular educational program in Egypt for sanitary engineers and sanitary chemists exist in the High Institute of Public Health (HIPH) of Alexandria University where a one-year academic diploma is provided to college graduates. Since 1958, when the first batch completed their studies, about 50 engineers were graduated as shown in Table (2). Most of them came from "AGWA" with very few from Ministry of Housing, "NOPWASD", one from GOSSD Cairo, one from GOSD, Alexandria, and none from Cairo Water Authority GCWSA. When discussing this subject with their relevant chairmen and managers, they said that they face a problem of shortage of engineers and cannot spare some of them even for a short period. In addition to the discouragement of academic and professional training for junior engineers, other major factors that contribute to the existing shortage are:

1. Poor salaries which do not allow any engineer to complete his studies without additional allowances to compensate for the incentives lost when they are out of work, and to cover the extra educational and living expenses especially when they need accommodations out of their cities. It is to be noted here that the institution fees are very nominal being less than LE 20 per year, an amount which does not present any obstacle. To overcome this financial difficulty, engineers should be encouraged to complete their studies and should become entitled to additional allowances as sufficient as the Ministry of Education internal rates or the WHO rates for educational missions to Egypt. This will be much cheaper than sending them abroad which needs more transportation and living expenses in addition to the high institution fees. An amount of LE 5000 per one year diploma for one student, when granted to 20 engineers every year from all relevant authorities will cost only 0.001% of the initial cost expected to be spent on such utilities till the end of this century. Such a negligible percentage would be allotted and could be considered as a part of the maintenance cost.

2. Unavailability of educational programs, especially in Cairo where three out of the national five authorities exist also contributes to the shortage. Undergraduate courses in sanitary engineering are only given to civil engineering students as a general course without going deep to the

96

extent of specialization into the subject. Graduate studies, although officially existing in all universities actually is limited to a very small number of students who are mostly instructors. To overcome such a problem, it is suggested that an agreement would take place between the Ministry of Housing and the Universities to launch a regular diploma program in sanitary engineering, preferably, in the night-school system. It would be financed by the MOHR and should be under the technical supervision of the university to meet the manpower requirements of relevant authorities and industries. Another alternative is to establish an educational and training sanitary engineering institute with the help of the WHO to share in construction and running cost if possible. It should be located in Cairo to provide educational as well as training programs for all technical levels. It should be associated with a university to have its recognition for academic degrees and training certificates.

3. Brain-drain to the countries of Asia and Africa also attract by higher salaries and better working opportunities. This drain has seriously affected the local capabilities since there has been an acute shortage suffered by all relevant authorities. To cope with the regional requirements of this speciality, more engineers would be allowed and encouraged to complete their studies in the HIPH or in other schools as available.

As regards training and education status for technicians, sanitarians, and plant operators, most of them are graduates of intermediate sanitary institutes or vocational and training centres, no in-service education is specified for plant operators or sanitarians. Training programs have been provided for periods ranging from one to six months in the HIPH, NRC and MPH. During the last ten years about 300 trainees attended tailored training courses in the HIPH. It is worth mentioning here that, according to the ratios of Table (2), we can estimate the intermediate education technicians to be 6.5%, which makes 3250 technicians, plant operators and sanitarians for the whole country as of 1980. By the year 2000 this figure will reach 5100. Presently, about 25% of the existing manpower of this category got some sort of training which should be intensified qualitatively and quantitatively. A special program for sanitarians and plant operators should be launched to be given to preparatory and high school certificate holders for four and two years respectively. Such a program should be under the direction of MOHR and MPH. The capacity of the granted intermediate diploma should be some hundreds every year to cope with the national and regional requirements. Beheira Governorate is carrying out some plans for water works operators which are appreciated and should be generalized all over the country.

97

SUMMARIZED FINDINGS, COMMENTS, AND CONCLUSIONS

1. Water and wastewater systems in Egypt belong to 5 big authorities, 26 Governorates, and big industries. The technical and administrative responsibilities are shouldered by the MOHR and local relevant administration bodies.

2. There are about 100 water and wastewater treatment plants. The available qualified engineers are not more than this figure, most of them exist in Alexandria, Cairo, big cities, and industries, in addition to a considerable number in regional countries.

3. The total number of personnel as of 1980 was about 50,000, while that expected for the year 2000 would reach 80,000. The numbers of engineers are 1250 and 2000 for 1980 and 2000 respectively. The numbers of technicians are 3250 and 5100 for 1980 and 2000 respectively.

4. The ratios of academically or vocationally qualified engineers, plant operators, sanitarians and technicians do not exceed 20%, most of them with some sort of training for periods ranging from a few weeks to few months.

5. No regular training programs exist, while there are possibilities in the HIPH, NRC, and MPH to test special sanitary programs according to different requirements.

6. Universities are supposed to provide their communities with Education, Research, and Services as needed. It is painful to state that such provisions have not cover sanitation aspects in detailed undergraduate or graduate programs. The only regular program exist in the HIPH for graduate studies to engineers and chemists regardless their back-ground. Unfortunately, such a program is relatively ignored from all concerned authorities except AGWA and MPH who still should increase the number of their missionaries.

7. In this connection, it is hurting also to know that the regular graduate studies in P.H. of the HIPH were also ignored and not invested as it should be from all relevant ministries except the MPH and the Medical Services of the Ministry of Defense where most of the P.H. staff in both ministries have been graduated from institute. No reason for such negligence is known except that we do not possess the right evaluation of our technical needs and/or WE do not know how to cover it locally as they do in the MPH and Ministry of Defense.

8. The existing national programs for updating and constructing new water and wastewater systems until the year 2000 would cost about ten billion pounds ("LE 10,000,000.000"). Such huge number of systems needs good investment as regards operation and maintenance other wise it could be ruined

98

if not well maintained as what already happened in other projects when faced by a shortage of technical personnel.

9. No regular intermediate education or vocational and training centres are available for sanitarians and plant operators; however there are good programs in some Governorates, as in the Beheira centre in Damanhour City.

10. The major retarding factors for studies and/or training are, poor salaries, unavailability of regular educational or training programs, and brain drain. Such factors could be mended with much less than 1% as annual budget of the expected project's initial costs.

RECOMMENDATIONS

1. The long term solution to Egypt's problems of technical manpower shortage in water and wastewater systems must depend upon a coordinated and cooperative efforts at the national level between the MOHR, MPH, the Ministry of Education, and the Universities towards formation of a National Training Council.

2. To soundly invest the existing studies at the Alexandria University HIPH at better rates for participants.

3. To launch a special graduate program in sanitary engineering, on the night school system, preferably at Cairo. The program should lead to one year diploma degree, which could later be expanded to further degrees.

4. Additionally, vocational and training centres of regular programs for sanitarians and plant operators centre in Damanhour is a good example and it should be generalized in other capitals to include water and wastewater operators.

5. Expansion of the newly formed Environmental council to give more stress on water and wastewater systems especially as regards their technical manpower requirements and how to be fulfilled. It is worth mentioning here that the development of detailed itemized manpower surveys is not as critical as the start of an attack on the massive existing needs for qualified operators, sanitarians, and managers. Also the improvement and strengthening of existing educational delivery systems seems more appropriate than building entirely new facilities.

6. New legislation needs to be initiated to give the MPH a regulatory rather than an advisory role in all areas of sanitary engineering especially as regards effluent quality, and prequalifications of personnel handling this subject.

7. Formation of a Sanitary Engineering Section in the Professional Engineering Syndicate, and also the formation of an Egyptian

Water Pollution Control Association as a part of the International Water Pollution Control Federation, is needed.

8. More national recognition should be given to the concept that sanitary drainage personnel are professionals. Motivation and incentives should be given, compensation for good performance, recognition and correction of poor performance, and development of pride in job performance are a few examples. These functions are management duties which must be better developed. Without improved management directives to improve performance, pride, benefits, and incentives, all of the proposed training might not effectively solve the existing environmentally deteriorated conditions.

9. In general, Egypt needs pragmatic training that is job-oriented, competency based and cost-effective. Again the key idea of Egyptians training Egyptians should be the goal of the funding agencies involved in training. Mid level managers and others who can be trained as trainees should receive priority emphasis. These persons can then transmit effectively to thousands of others the skills and techniques necessary to manage, operate, and produce a quality effluent.

10. Funds needed to cover all the prementioned recommendations must be allotted. Such allotments are much less than 1% of the initial cost of maintained projects and without which a project might be seriously deteriorated and might become a source environmental pollution. A case which was faced in some of the existing treatment plants.

Acknowledgement

The writer wishes to thank Dr. Amin El-Gamal, First under Secretary of State, MPH, and Dr. Ronald Layton, WHO consultant on man-power requirements, for data provided.

TABLE (1)

LOCAL MANPOWER DISTRIBUTION

No	Authority	1980	2000
1	Water-Cairo "GCWSA"	4000	8000
2	Water-Alexandria"AGWA"	3800	8000
3	Water-Provincial"NOPWSD"	5000	9000
4	GOSSD-Cairo	8500	12000
5	GOSD-Alexandria	6000	8000
6	Major Cities	10000	15000
7	26 Governorates	8000	10000
8	Industrial	4700	10000
9	Total	50,000	80,000

TABLE (2)

1980 GOSSD MANPOWER CATEGORICAL DISTRIBUTION

No	Category	Number	%
1	Civil Engineers	90	1.06
2	Mechanical Engineers	75	0.89
3	Electrical Engineers	45	0.53
4	Chemists	15	0.18
5	Technicians	550	6.48
6	Financial Affairs Staff	195	2.29
7	Administrative Affairs Staff	130	1.53
8	Office of Chairman Staff	65	0.76
9	Occupationally Skilled Workmen	2500	29.41
10	Unskilled Workmen	4835	56.99
	Total	8500	100.00

101

TABLE (3)

GRADUATES IN SANITARY ENGINEERING "HIPH"

Year	Diploma	Masters	Doctorate
1958		2	
1959		2	
1960		6	
1961		6	
1962		1	
1963	1		
1968	3		
1969	1		
1970	1		
1971	2		
1972	2		
1973	1	1	
1974	1	1	
1975	1		
1976	2		1
1977	1		
1978	3		
1979	2		
1980	2		
1981	1	1	
1982	1		
1983	2		
1984	2		
	29	20	1

10

MINISTRY OF HEALTH
ARAB REPUBLIC OF EGYPT

EASTERN MEDITERRANEAN REGIONAL OFFICE
WORLD HEALTH ORGANIZATION (EMRO/WHO)

UNITED NATIONS DEVELOPMENT PROGRAMME
EGYPT (UNDP) (UNICEF)

Second National Conference
on the
Sector Progress and Needs
of the
International Drinking Water Supply
and Sanitation Decade (IDWSSD) in Egypt

16-18 April 1985

THE NATIONAL SCENE FOR SECTOR MANPOWER AND TRAINING

By

FLEMMING HEEGAARD
Human Resource Development Consultant
United Nations

107

In 1982 a task-force was convened in Geneva by WHO to consider drafting and issuing a Basic Strategy Document on human resource development for meeting water and wastewater goals of the U.N. Decade.

The Basic Strategy Document (BSD) issued by the IDWSSD Steering Committee for Cooperative action, who appointed the task-force and accepted its recommendations, is very helpful to our task here because it helps define what we mean by human resource development as it relates to the complexities of the countries participating in the Sector exercise:

1. HRD includes supervision and skill development at every level of staff serving the water supply and sanitation sector.

   The focus is therefore on all levels, i.e., top managers, engineers, laboratory personnel, skilled and semi-skilled workers, in the context of their roles and responsibilities for providing services to the public.

2. Governments need to make both short-term and long term coordinated plans for meeting manpower supply and training needs.

   It is gratifying to note that Egypt, by Decree No. 586 by the Minister of State for Housing and Land Reclamation, on December 14 1983, established a National Water and Wastewater Training Committee which has developed both a short-range and a long-range plan for water and wastewater human resource development.

3. Governments need to improve coordination between education and training agencies in the sector.

   Since the basic supply of manpower, especially vital categories such as engineers, come out of the educational system, some of the burden for providing post-graduate training in critical fields, such as sanitary engineering, can be lessened by changes in undergraduate curricula. By the same token, training can efficiently focus on special technologies, such as water sewage treatment, which cannot be taught as part of the basic curriculum in the universities. In other words, formal educational curriculum committees need to become aware of the HRD needs of the nation, just as the training institutes need to be aware of the needs of the sector institutions for specialized skills and knowledge, in order that both can strengthen formal and non-formal means of learning.

104

4. <u>There is a need to strengthen the role of women in the sector</u>.

Women are found in all sector institutions but usually play a disproportionally small role considering their importance in all aspects of water and sanitation. This is especially true at the community level where women play a vital role in the handling of food and water. Others at this meeting will develop this subject more fully than I could do justice to here.

<u>The Current Manpower and Training Situation in Egypt</u>

Quite a few attempts have been made to assess the sector manpower situation in Egypt over the past 8-10 years. The results have been highly contradictory and all consultants, including this one, have been careful in indicating that their data is at best estimation with unknown variances.

The reasons for this are not hard to find: the collection, storage and reporting of manpower statistics are at once a low priority and a difficult task for most government agencies. In the governorates, perhaps in part due to the rapid decentralization over the past 10 years, there appears to be little or no emphasis on establishing offices of manpower statistics as a key function for planning and decision-making.

Central agencies and authorities are somewhat better at this, it appears that only when this data requested from outside (e.g., from consultants or from other government agencies) is it pulled together. The data, in other words, is not collected and presented to top management in a form where planning and decisions can be made which can affect both the quantity and the quality of the manpower.

"I don't know what I can do. I can use about 1500 new people a year in my governorate, but the government sends me 5000 graduates every year. I don't even have chairs or desks for them."

Returning to the various estimates on the sector manpower situation, we can summarize the estimates as follows:

The Binne and Taylor World Bank report, a comprehensive survey of the water sector, done at the start of the Decade, made a conservative estimate that 5000 more professionals and skilled workers would be needed by 1990 the strengthen the <u>water sector</u>.

Since then, water and sewerage have been combined and WHO consultant Dr. Layton estimated that at least 23,600 trained water and sanitation workers would need to be added by the year 2000.

The National Water and Wastewater Committee carried out its own survey (and also reported receiving little or no data from the governorates), and concluded that the water sub-sector was

105

facing a shortage of 38,838 workers (63.3% shortfall) and estimated that sanitary drainage in greater Cairo and Alexandria was short by 9958 workers for a total shortage in the sector of 48,796.

It should be noted that there are no estimates by the committee on the need for sanitation manpower outside Cairo and Alexandria.

Looking for the moment at the sample data which the current WHO sector survey team collected over the past few months, we note immediately a number of discrepancies between the number of positions allocated and the number of vacancies.

In NOPWASD, for instance, there is an overall vacancy of about 10%, but among engineers it is closer to 30%. In GPGCWS there is also about 10% short-fall, also with a vacancy rate of about 30% amongst engineers.

Amongst field staff of the Ministry of Health, sanitarians working on water and sanitation, and who collect samples on water and sewage quality, there is a shortage of health inspectors by 939 (about 20%).

At the same time, the total number of assistant sanitarians has declined by 650 since 1980 in spite of an estimated rural population increase of about 2 million. The impact of this is that these important rural health maintenance workers now have to serve between 4000-5000 individuals each, rather than about 3000 as was the case in the early and mid-70's.

A possible explanation for this can be found in the statistics on the Health Training Institutes whose graduation of sanitarians and assistant sanitarians have declined by about 50% since 1980.

The sample statistics available in Damietta Governorate indicate a somewhat more stable picture with none of the technical staff reported seconded or on long-term leave. No post-technical school or other in-service training was reported for key categories of personnel, such as operators of sanitation plants, either in Damietta or in any of the other governorates visited, nor is there any evidence of any qualifications by the craft-persons, many of whom are vital for operations and maintenance of electrical, pumping and medical functions in water and sanitation in the governorates and cities.

<u>Training</u> is one of the key tools by which management can control productivity by ensuring that workers know WHAT to do, WHEN to do it, and HOW to do it correctly.

The rapid growth of public services in Egypt during the post-war period has introduced a large number of mechanized and semi-mechanized operations which need to be operated and maintained. In addition, there are a number of plants for water and sewage constructed in the late 60's and early '70's which are in the

106

process of deteriorating, and which are in need of substantial maintenance and renovation if they are to continue functioning.

The National Water and Wastewater Training Committee has proposed a short-range training plan to prepare trainers of the cadres of operations and maintenance in both water and sewage treatment plants. In addition, the programme would pay bonuses to participants, i.e., plant operators, based on their performance in the course. In the longer range plan, the committee recommended the training and use of ex-soldiers in potable water and drainage utilities, the expanded use of training facilities in the Ministry of Industry, and in the National Centre for Industrial Security.

The Committee's report does not include any budgetary estimates for this program, nor does it indicate a source of financing. Regardless of whether such a program is financed by the GOE itself, or from bilateral or multilateral sources, it is urgently needed and should be carried out forthwith.

Some specific training needs identified by the WHO sector survey team.

In this final section, I want to briefly summarize some of the specific training needs which we have identified along with recommendations for what to do about them.

1. Training of compact unit water plant operators.

   Recognizing that there are now close to 100 'package' or compact, water treatment plants already in operation in Egypt, with a substantial number coming on line within 1-2 years, it is recommended that a programme for rapidly training the plant supervisors, who in turn can train the operators in their own governorates, is urgently needed. This programme, which will focus on the needs of the governorates for supervision management and technical skills needed in operating and maintaining these 'mini' plants, should commence this year with the support of WHO. Training materials developed by the instructional task-force (the TOT team) will concentrate on producing Arabic-language manuals relevant to the two techniques involved in water treatment by the compact plants.

2. Health Technical Institutes.

   We find an urgent to improve facilities and training for sanitarians, assistant sanitarians and laboratory technicians, all products of the Health Training Institutes.

   Secondly, we find a strong need to provide in-service training for the existing sanitary workers, on a regular basis, through the facilities of the institute.

107

This will require a substantial investment in improving the 10 institutes, through faculty and curriculum development, provision of training materials and equipment, visiting experts and guest lecturers, as well as subsidies to students (who may well be mid-career personnel attending in-service training), in order to attract good quality entrants and to keep what remains of the system.

A proposal for this is now under development for the longer-term UNDP/WHO/UNICEF project, and suggestions for this effort are earnestly solicited.

3. We also find an urgent need for training of top management in the governorates in issues and technologies water and sanitation. This may include a variety of topics, including appropriate, low-cost sanitation technologies, village sanitary treatment systems and procedures for keeping water potable until it reaches the consumer.

   Proposed are a series of workshops for the senior managers on vital issues related to the relationship between health, clean water and sanitation.

4. Laboratory technicians and chemists in the governorates, both at treatment plant level and in the health laboratories, need both training and equipment. Provided that a new set of working standards can be developed, it is hoped that assistance can be provided Mr. Yusef, Director of the Embaba laboratory, in his effort to establish such a training program.

5. We have noted the problems of record keeping in both health statistics and manpower in this sector and propose to initiate a computerized data-management system which would keep track of information for management on:

   a. Results of water and sewage sampling over a period of years;
   b. Essential sector manpower statistics (e.g., sanitary engineers, water and sewage plant operators, sanitarians, laboratory personnel, etc.); and
   c. Documentation related to sector activities.

6. We note, finally, that training capacity itself cannot be separated from overall management capacity and is in fact an expression of the level of management existing in the country today.

   As experience with a number of other countries has demonstrated, training capacity can only be developed by the implementation, on a trial and error basis, of a variety of HRD activities. In order to begin to build this capacity rapidly and well,

108

the country needs to invest in a number of preliminary activities:

a. Individuals responsible for managing operations need special preparation in the management of training.

   This requires background in principles of adult learning, training methodologies, evaluation techniques, and skills in assessing training needs of organizations and individuals. Furthermore, the supervisors of these individuals need some basic understanding of these same areas if they are to become supportive.

b. Instructional materials must be developed locally, in Arabic, by individuals, or teams of individuals, where skills in subject matter as well as appropriate menas of communication are represented.

c. A relationship must be established between training, job-performance and career advancement. Paying participants for attending training is all very well, but unless they are aware of a relationship between being selected for training, performing well and promotion, they will not have the motivation needed to give their full energies either to the training or to the job.

d. Senior managers must be aware of what training can do to increase productivity, need access to training for their subordinates, and must be in a position where they can use training to meet organizational needs.

e. Training and HRD need to become recognized in Egypt as a profession, respectable in the way engineering, law and medicine are regarded. The formation of an Egyptian Society for Training, similar to those in India, Malaysia, Pakistan, the Philippines and virtually all of the Western countries, would be a critical step in this regard and could lead to transfer and exchange of knowledge and innovations through international meetings, consultations and other exchanges.

109

APPENDICES

Budgetary Allocations for Training:
Major Sector Organizations 1983-85*

	1983-84 Approved Budget	1984-85 Approved Budget
NOPWASD	65,200	20,000
GOGCWS	3,000	3,000
AMGA	2,000	1,000
GCGOSD	1,500	1,500
AGOSD	1,500	1,000
	73,200**	26,500

* Chapter 2 Budget
Cost of Training Programme

** Does not reflect expenditures

NDPWASD

Managerial, Professional and Technical Manpower: 1985

	POSITIONS	L.O.A.	VACANT	AGE
1. MANAGEMENT				
First Under Secretary	2	1	-	55
Under Sec. (design)	1	-	-	59
Under Sec. (project execution)	2	-	-	58
Under Sec. (proj.& studies)	1	-	-	59
Under Sec. (training)	1	-	-	59
Under Sec. (planning & technical)	1	-	1	-
Under Sec. (water & sanitation)	15	-	-	-
Under Sec. (admin & finance)	-	-	-	
2. TECHNICAL & PROFESSIONAL				
Elec. Engs.	40	5	17	35
Civil Engs.	81	11	20	35
Mech. Engs.	105	9	44	35
Architects	13	-	5	35
Chemists	4	-	1	35
Training Officers	2	-	-	48
3. TECHNICIANS				
Electricians	9	-	-	40
Mechanics	45	-	33	45
Carpenters	5	-	-	53
Heavy Equip. Operators	81	1	42	43

NOTES:

1. A number of senior officials retired recently upon reaching 60, the mandatory age.

2. The shortage of civil and mechanical engineers is evident (30%).

3. L.O.A. - Leave of absence.

Table of GOGCWS positions as of 27-1-85

Grades Groups		FUS*	US*	DG*	Grades 1	2	3	4	5	6	Total
Top Management	allowed	1	6	16							23
	occupied	1	5	13							19
	vacant	–	1	3							4
Engineers	allowed				33	38	204				275
	occupied				30	38	111				179
	vacant				3	–	93				96
Chemists	allowed				7	9	33				49
	occupied				7	10	31				48
	vacant				–	1	2				1
Lawyers	allowed				5	10	11				26
	occupied				5	10	9				24
	vacant				–	–	2				2
Account-ants	allowed				17	50	155				222
	occupied				17	55	127				199
	vacant				–	5	28				23
Admin-istration	allowed				16	23	35				74
	occupied				16	10	35				61
	vacant				–	13	–				13
Security	allowed				3	6	3				12
	occupied				3	3	3				9
	vacant				–	3	–				3
Soc/Serv & Inform-ation	allowed				3	7	8				18
	occupied				3	4	12				19
	vacant				–	3	4				1
Jr. Tech-nicians	allowed			2	25	88	180	285	5		585
	occupied			–	23	89	179	154	–		445
	vacant			2	2	1	1	131	5		140
Lab.Tech-nicians	allowed					3	17	31			51
	occupied					3	17	32			52
	vacant					–	–	1			1
Clerks	allowed				22	232	440	990	84		1768
	occupied				20	226	438	990	65		1739
	vacant				2	6	2	–	19		29
Skilled Labour	allowed					311	1434	533	960	1087	4325
	occupied					292	1441	538	935	973	4179
	vacant					19	7	5	25	114	146

Table of GOGCWS positions as of 27-1-85

Groups	Grades	FUS*	US*	DG*	1	2	3	4	5	6	Total
Unskilled Labour	allowed							473	444	2358	3275
	occupied							442	348	1543	2333
	vacant							31	96	815	942
Total (allowed)											10703
Total (occupied)											9306
Total (vacant)											1397

*FUS - First Under Secretary

* US - Under Secretary

* DG - Director General

GOGCWS

Maternity Leave
(Maximun - 2 years - no payment)

Grades / Groups	1	2	3	4	5	6	Total
Engineers	1	4	9				14
Accountants		1	16				17
Chemists			1				1
Administration			5				5
Social Services			2				2
Clerks		1	31	59	1		92
Total	1	6	64	59	1		131

GOGCWS

L.O.A. (no payment)

Grades / Groups	1	2	3	4	5	6	Total
Engineers		1	6				7
Accountants		1	4				5
Chemists			1				1
Lawyers			2				2
Executive Technicians		1	5	1			7
Clerks		1	4	9			14
Skilled Labour			10	3	4	4	21
Services				1	2	4	7
Total		4	32	14	6	8	64

GOGCWS
Secondment
contractd employment outside organisation (inside or outside Egypt)

Grades / Groups	1	2	3	4	5	6	Total
Engineers	2	1	3				6
Accountants	1	4	3				8
Administration	1		1				2
Chemists		1					1
Lawyers			2				2
Social Services		1					1
Assistant Technicians		6	17	2			25
Laboratory Technicians			1	1			2
Clerks	1	5	10	9	2		27
Services				2	7	6	15
Skilled Labour		1	17	12	9	1	40
Total	5	19	54	26	18	7	129

GOGCWS
Absent on Military Service

Grades / Groups	1	2	3	4	5	6	Total
Engineers			1				1
Accountants			2				2
Assistant Technicians				13			13
Laboratory Technicians				2			2
Clerks				14	3		17
Skilled Labour					7		7
Ass. Skilled Labour						135	135
Unskilled Labour						71	71
Chemists			1				1
Total			4	29	10	206	249

116

NUMBER OF STUDENTS REGISTERED AND GRADUATED

IN THE HIGH TECHNICAL INSTITUTES OF EGYPT:

HEALTH INSPECTORS

Year	1980/81			1981/82			1982/83			1983/84		
Govern-orate	1st year	2nd year	Grad	1st year	2nd year	Grad	1st year	2nd year	Grad	1st year	2nd year	Grad
Embaba	99	89	75	25	74	61	54	33	24	84	24	22
Alexandria	284	120	99	116	157	136	203	82	62	235	113	93
Assiut	106	75	67	51	95	87	73	53	51	66	35	32
Mansura	145	72	52	67	79	76	83	57	49	72	44	38
Tanta	76	60	53	19	40	32	25	26	23	52	16	15
Zagazig	76	35	31	33	61	55	81	28	28	80	50	47
TOTAL	786	451	377	311	506	447	519	279	237	589	282	247

117

NUMBER OF HEALTH SANITARIANS

IN EGYPT

1981-1984

Governorate	1981 in-serv	1981 pos	1982 in-serv	1982 pos	1983 in-serv	1983 pos	1984 in-serv	1984 pos	Current Shortage (1985)
Cairo	291	327	325	373	259	281	392	422	30
Alexandria	301	310	315	344	350	463	306	381	75
Port Said	40	49	36	50	31	46	28	45	17
Suez	43	43	39	40	8	8	8	8	0
Ismailia	30	39	34	48	40	56	38	41	3
Damietta	10	14	65	94	59	95	68	96	28
Daqahlia	244	347	250	381	309	434	344	464	20
Sharkeia	203	296	225	305	186	226	254	306	52
Qalubeia	107	110	96	122	95	115	107	137	30
Kafr El Sheik	145	165	145	165	181	202	153	221	68
Gharbeya	168	177	177	189	189	201	181	190	9
Menufia	118	183	133	196	131	206	144	210	66
Beheira	284	343	275	406	327	401	275	326	51
Giza	158	217	187	228	190	234	290	335	45
Beni Suef	147	166	147	166	129	151	136	166	30
Fayoum	95	120	110	140	135	135	127	144	17
Minia	196	230	212	256	219	263	224	237	13
Assiut	268	287	246	277	305	324	305	329	24
Sohag	246	267	270	312	269	308	274	326	52
Qena	134	145	177	189	196	218	201	227	26
Aswan	40	78	40	78	69	69	33	48	15
Matrouh	20	29	21	38	18	33	22	50	28
New Valley	17	28	12	23	14	26	19	33	14
Red Sea	14	24	18	22	17	18	19	20	1
N. Sinai	12	34	19	43	43	64	25	43	18
S. Sinai	6	11	11	18	14	20	14	20	6
TOTAL	3337	4039	3585	4503	3783	4627	3987	4825	838

NUMBER OF ASSISTANT SANITARIANS

IN EGYPT

1981-1984

Governorate	1981 in-serv	1981 pos	1982 in-serv	1982 pos	1983 in-serv	1983 pos	1984 in-serv	1984 pos	Shortage
Cairo	213	213	61	61	180	180	137	137	0
Alexandria	143	142	37	37	37	37	173	181	8
Port Said	36	38	104	111	104	111	29	29	0
Suez	32	33	7	7	8	8	31	31	0
Ismailia	20	23	40	46	8	11	53	54	1
Damietta	59	67	37	42	-	-	70	74	4
Daqahlia	450	561	218	263	213	253	47	49	2
Sharkia	329	362	250	251	108	111	363	372	9
Qalubeia	279	258	153	156	180	186	188	189	11
Kafr El Sheik	194	209	45	45	30	40	169	190	21
Garbeia	279	289	75	88	74	86	321	323	2
Menufia	236	254	-	-	-	-	244	262	18
Beheira	475	480	56	66	55	57	365	377	12
Giza	220	223	35	36	58	59	172	191	19
Beni Suef	277	277	-	-	286	318	296	296	0
Fayoum	81	81	42	42	48	48	124	124	0
Minia	252	256	16	16	19	19	248	252	4
Assiut	342	373	-	-	88	88	228	293	65
Sohag	424	424	254	275	371	416	351	357	6
Qena	306	313	203	208	345	357	340	345	5
Aswan	156	157	137	138	-	-	313	323	10
Matrouh	28	28	2	2	-	1	25	29	4
New Valley	68	73	8	10	11	13	69	75	6
Red Sea	11	11	2	2	4	4	12	13	1
N. Sinai	4	6	4	5	-	-	15	15	0
S. Sinai	-	-	1	1	1	1	1	1	0
TOTAL	4914	5182	1787	1908	2228	2404	4384	4582	198

MINISTRY OF HEALTH
ARAB REPUBLIC OF EGYPT

EASTERN MEDITERRANEAN REGIONAL
OFFICE
WORLD HEALTH ORGANISATION (EMRO/WHO)

UNITED NATIONS
DEVELOPMENT PROGRAMME
EGYPT (UNDP)
UNITED NATIONS CHILDRENS
FUND, EGYPT (UNICEF)

Second National Conference
on the
Sector Progress and Needs'
of the
International Drinking Water Supply
and Sanitation Decade (IDWSSD) in Egypt

16th - 18th April 1985

28th March 1985

OPERATIONAL AND FINANCIAL PLANNING FOR THE SECTOR

by

M.J. Croston, Financial Consultant (TAMS)
Advisory Committee for Reconstruction (ACR)
Ministry of Development, New Communities
and Land Reclamation

120

1.0. INTRODUCTION

The purpose of this Paper is to provide a brief description of the present planning and budgeting system in the Water and Wastewater Sector. The substantial increase in investment for water and sanitation facilities, particularly during the present Decade, is discussed together with the need for substantial increases in operational and maintenance budgets. These increased budgets will be essential if both existing and new facilities are to be properly operated and protected by adequate maintenance. Details of existing operational and maintenance budgets in the urban areas are provided. The need to develop present operational and financial planning systems for the Sector is discussed and a description of ongoing work in this area is given.

2.0. CURRENT PLANNING AND BUDGETING SYSTEMS

2.1. Investment Planning

The Sector is subject to the normal Government Planning Systems and its current investment plans are embodied in the 1982-1987 5-Year Plan. The 5-Year Plan provides the framework into which individual investment projects, of the various sector organisations are incorporated.

The 5-Year Plan does not roll-forward on an annual basis but is effectively set for the period 1982-1987. Provision does exist however for the inclusion of new investment projects, if these projects are judged to be of a sufficiently high priority and in accordance with the goals of the approved 5-Year Plan. All projects are classified for planning purposes into a number of categories. These categories include replacement and rehabilitation, renewal of plant and equipment, the completion and expansion of existing works, new projects and minor provisions for non-identified and other projects.

The main method of updating the 5-Year Plan once approved however is, through the annual Chapter 3 Investment Budget procedures. In November, each organisation submits its proposals for the following years investment programme, based on the schemes included in the approved 5-Year Plan, to the Ministry of Planning and International Co-operation (MOPIC). Following direct consultations between the Sector organisations and the MOPIC, which also liaises with the organisations sponsoring Ministry, final investment proposals are submitted to the Cabinet and its sub-committees, prior to consideration and approval by the People's Assembly. Once the annual Chapter 3 budget is approved, each organisation is issued with its investment programme, detailed by individual project. The MOPIC then monitors progress of investment projects during the year, on a quarterly basis. Once the annual follow-up report is completed at the end of the financial year ending 30th June, information is available both for the physical works executed and also the actual expenditure for each project. Actual progress for planning purposes is monitored through the works executed total, with actual expenditure being used for accounting purposes. Within the Sector, some organisations roll-forward their investment programmes each year, either to the end of the 5-Year planning period, i.e. 1987 or alternatively to the estimated date of completion for individual projects.

There is a tendency for Sector organisations to request larger investment allocations than are actually required or which could be completed within the financial year, to allow for the normal investment budget reductions made by the MOPIC, which has to balance the demands of all sectors against national resources available. Although investment budgetary constraints do not appear to have been the most important limiting factor in recent years on the development of the Sector, it is apparent that the constraints on investment budget resources available to the Water and Wastewater Sector will have a more significant impact over the next few years. This is inevitable as many of the large investment projects, particularly in the major cities are now on-going, with reduced opportunities to either defer project starts or allow delays in project implementation for those projects which are now subject to contractual obligations. In addition, demands for investment resources for water and sanitation projects in the provincial governorates are increasing, due both to relatively low funding levels in recent years and also as external funding agencies complete feasibility studies which help identify the scale of investment resources required. An overall assessment of the Sector's investment requirements by the Ministry of Housing and Public Utilities is consequently essential if the relatively limited investment resources available are to be used to best effect, in areas of highest priority.

The Sector itself is relatively complex in terms of the different Ministries and types of organisations involved and Figure 2.1 attached provides an overall view of the different agencies involved in the investment planning process, for the Sector.

EGYPT - WATER AND WASTEWATER SECTOR
INVESTMENT PLANNING AND BUDGETARY ARRANGEMENTS

(Source - Ministry of Housing and Public Utilities)
March 1985

FIGURE 2.1

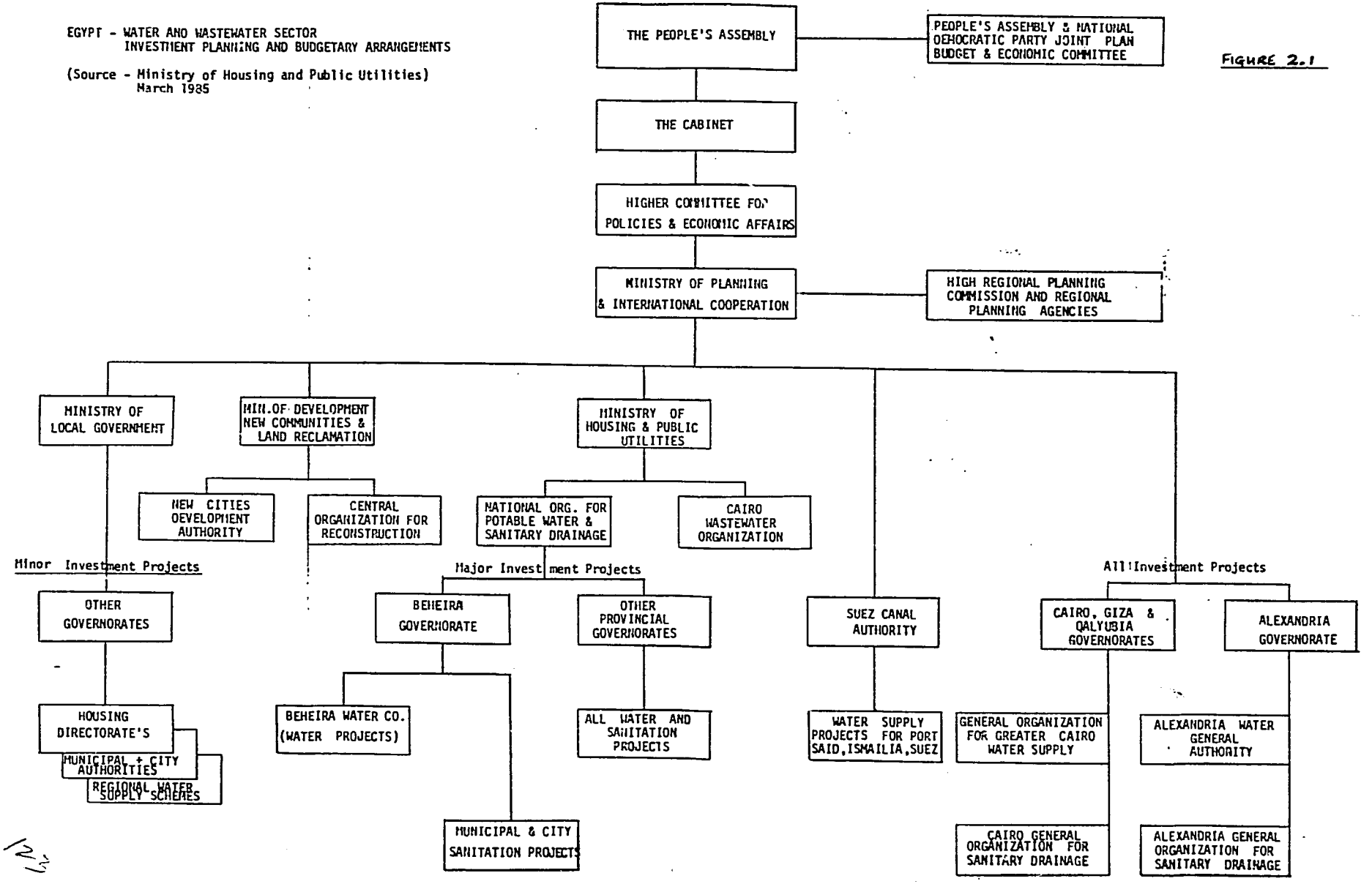

2.2. Operational Planning and Annual Budgets

The determination of operational and maintenance budgets, is an annual process undertaken by the various sector organisations under the direction of the Ministry of Finance (MOF). The procedures and criteria followed in the annual budget process for the Sector, are similar to those applied to the rest of the Public Sector.

Operational and maintenance budgets are made up of two separate chapters. Chapter 1 comprises the manpower budget, which prior to the approval of the Ministry of Finance, is considered by the Central Authority for Organisation and Administration, which reviews all manpower aspects and advises the Ministry of Finance on manpower needs, appropriate grades and staff conditions. The Chapter 2 budget included provision for goods and services and also what may be termed, the financing costs which include local interest payments. In the case of water organisations which are classed as economic units, provision for depreciation is also included. Chapter 2 also includes a number of other miscellaneous items such as rents, taxes and duties. A Chapter 4 budget also exists which covers the repayment of loans, advance payment to contractors and investment financed from external sources including international agencies.

It is normal practice for sector organisations to request budget increases each year, to provide for increased expenditure associated with new facilities and to meet increased demands. In addition, as budget reductions by the MOF are inevitable given the overall budgetary constraints within the economy, sector organisations generally feel it is essential to request additional funds to help compensate for these budget reductions. Close consultation between the sector organisations and the MOF representatives exist during the formulation of operational and maintenance budgets. The operational and maintenance budgets for the Sector are collated with those of the rest of the Public Sector and presented to the Cabinet and its sub-committees prior to consideration and approval by the People's Assembly.

Once the State Budget is approved, individual organisations are issued with their annual budgets and generally, procedures controlling actual expenditure against these issued budgets are effective in ensuring over-spendings do not occur without prior MOF authorisation. Authorization of expenditure is generally centralized within the finance department of organisations, with emphasis on stewardship accounting rather than providing costing or management information to operational line managers. Given these conditions it is inevitable that budgets have in the past, and will increasingly in the future, be found to be insufficient to secure adequate materials and services for effective operation and maintenance of facilities. It is essential for the future that budget submissions are based on sound operational plans prepared by operational line managers so that the real needs of the sector organisations can be demonstrated to the MOF. Budgetary control during the year is maintained on a quarterly basis by the Ministry of Finance. The relatively complex nature of the Sector results in a number of Ministries and Organisations becoming involved in the budget process and Figure 2.2 attached provides an overall view of the links between the various ministries and sector organisations in the annual budget process.

EGYPT - WATER AND WASTEWATER SECTOR
OPERATIONAL AND MAINTENANCE COSTS BUDGETARY ARRANGEMENTS

(Source - Ministry of Housing and Public Utilities)
March 1985.

FIGURE 2.2

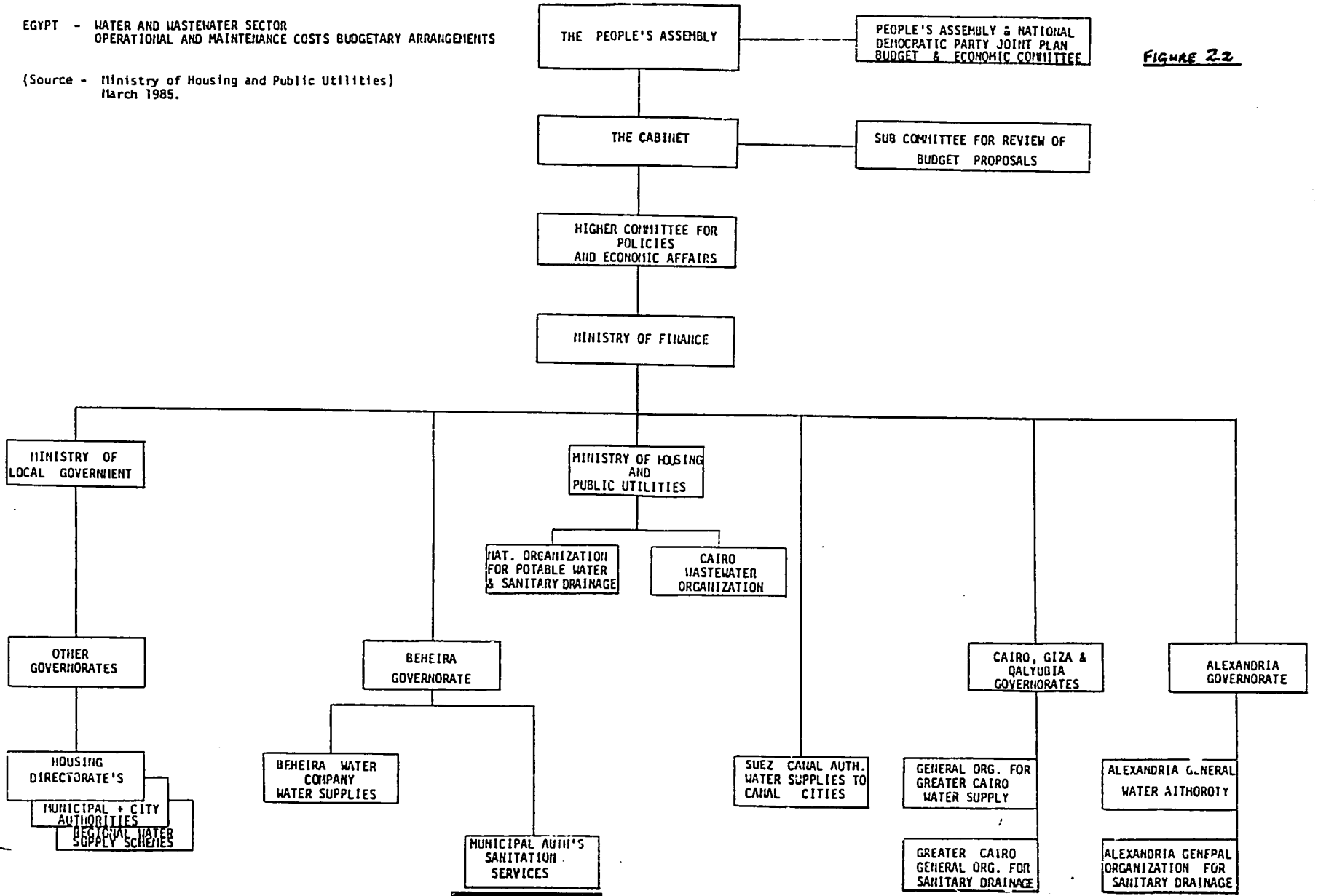

3.0. RECENT INVESTMENT TRENDS AND OPERATIONAL AND MAINTENANCE NEEDS

3.1. Investment Trends

In recent years investment in the Water and Wastewater Sector has been subject to significant increases. During the 1960's LE 93.2 Million was invested equivalent to 2.9% of fixed investment, which increased to LE 620.9 Million in the 1970's equivalent to 4.4% of fixed investment.

Provision for a rapid increase in investment for the Water and Wastewater Sector was made in the 1978 to 1982 5-Year Plan, which clearly identified the adverse impact of insufficient investment in earlier years on the Sector and on the conditions of its facilities. The Approved 1978 to 1982 5-Year Plan anticipated total investment of LE 623 Million on water and wastewater facilities equivalent to 6.1% of national gross fixed investment. In the event, the impact of economic growth and price increases resulted in LE 1135 Million being invested between 1977 - 1982, which was equivalent to 6.3% of national gross fixed investment, a slightly higher percentage than originally planned. The investment budget for the Sector as approved in the current 5-Year Plan for the period 1982 - 1987, whilst lower than the requests made by sector organisations, still represents a significant increase. The allocation of LE 2858 Million is equivalent to 8.2% of the gross fixed investment forecast for the plan period. In addition to the LE 2858 Million investment forecast for the Plan Period it was also anticipated that a further LE 591 Million would be available to the Sector from foreign donors, to bring total resources to LE 3449 Million. The major portion of external funding for the Sector has been, and is for the future, anticipated to be provided by the United States Agency for International Development (USAID), which should result in the Plan investment forecasts being exceeded, particularly in the case of the Cairo Wastewater Organisation. The recent history of investment, with latest forecasts can be summarised as follows:

	LE Millions	
Period	Total Investment	Average Annual Investment
1965-1976 - Actual Results	228	19 p.a.
1977-1982 - Actual Results	1135	227 p.a.
1982-1987 - Plan Forecast (1981-82 Prices)	3449	690 p.a.

The increased level of resources available to the Sector reflect the concern of the Government for the state of the water and wastewater facilities and the importance of these facilities to continued social and economic development.

146

3.2. Five Year Investment Forecast 1982-1987
The Table below details the investment allocation to the various types of organisations providing water and wastewater facilities.

Organisation	5-Year Approved Budget
i. General Organisation for Greater Cairo Water Supply - GOGCWS	284.2
ii. Alexandria Water General Authority - AWGA	222.7
iii. Suez Canal Authority - SCA	41.7
iv. Cairo Wastewater Organisation - CWO	451.5
v. Greater Cairo General Organisation for Sanitary Drainage - GCGOSD	275.8
vi. Alexandria General Organisation for Sanitary Drainage - AGOSD	217.4
vii. National Organisation for Potable Water and Sanitary Drainage - NOPWASD Governorate major projects	659.1
viii. Ministry of Local Government	
a. Minor projects in Governorates	161.6
b. Provision for Other Utilities	288.4
ix. Ministry of Development	
a. Development Areas	89.6
b. New Communities	166.0
- Five Year Plan - Approved Schemes	2858.0
- Additional Foreign Credit Facilities	591
Total	3449

It is likely that the five years actual investment will be higher, due partly to inflation, but particularly as a result of increased assistance by donors for city organisations as well as rural areas within the Sector.

121

The 5-Year Plan is not rolled forward by all organisations, but tentative forecasts to 1982-1987, subject to the Ministry of Planning and International Co-operation approving the necessary investment resources, indicate the following investment requirements:

	LE Million
Approved Five Year Plan	3449
1982-83 Actual Investment	360
1983-84 Actual Investment	520
1984-85 Issued Budget	720
1785-86 Forecast	1600
1986-87 Forecast	1690
Total	4890

The substantial increases in the investment forecast for 1985-86 and 1986-87 reflect particularly, the impact of executing sanitation projects in Cairo. Over the longer term to the end of the century, once the major renewal and expansion projects in Cairo, Alexandria and the Canal Cities are completed, the World Bank have estimated annual investment levels between LE 500 Million to LE 600 Million. These investment levels will be sufficient to ensure all the population have access to potable water either through house connections or public standpipes. This level of investment should also permit the construction of sewerage systems for 98% of the population in the metropoles, 75% of the population in urban areas of Provincial Egypt, with general improvements to sanitation facilities in the rural areas being achieved. Figure 3.2 attached, illustrates recent and forecast investment trends.

128

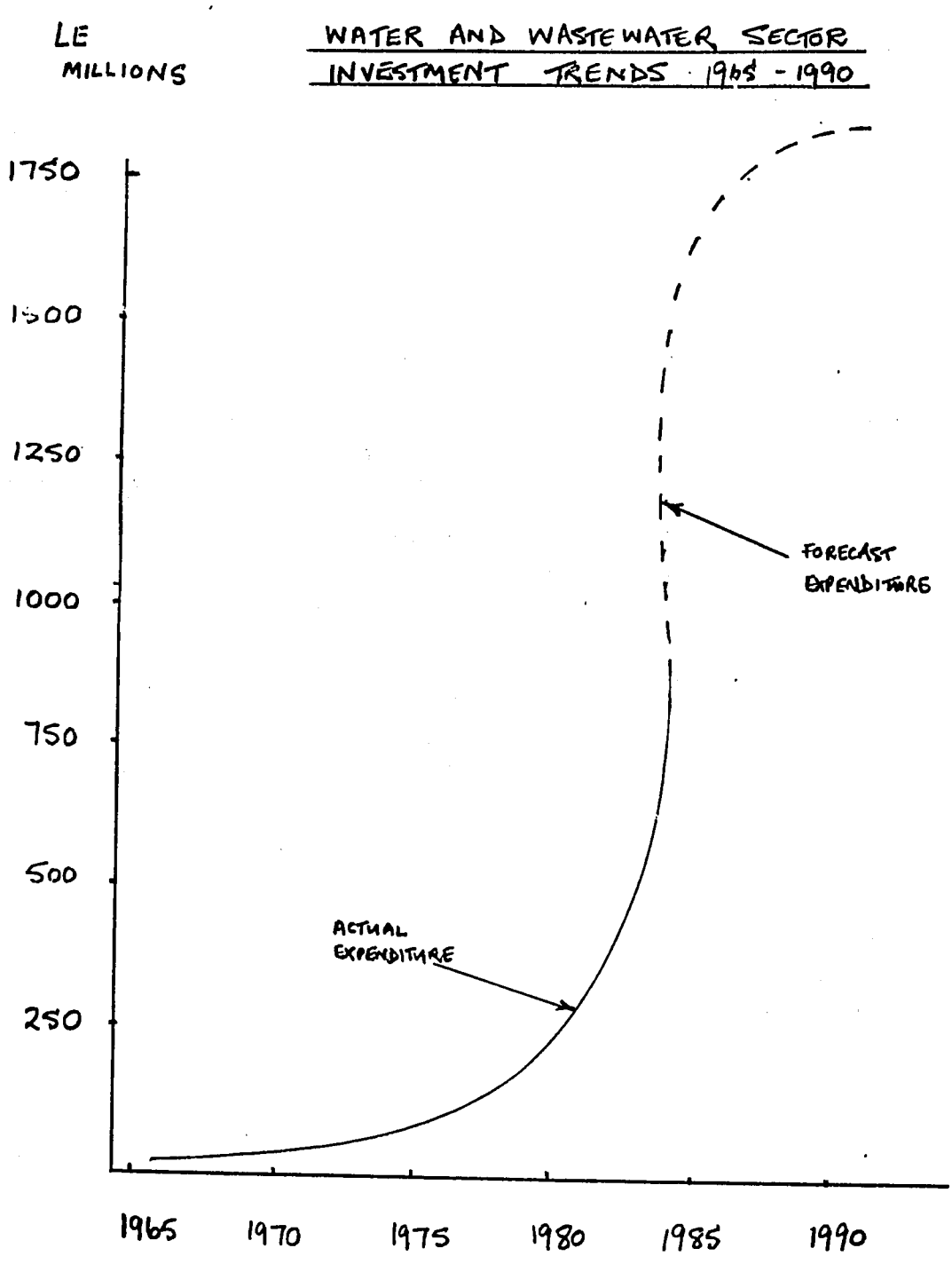
LE
MILLIONS
WATER AND WASTEWATER SECTOR
INVESTMENT TRENDS 1965 - 1990
1750
1500
1250
1000
750
500
250
FORECAST
EXPENDITURE
ACTUAL
EXPENDITURE
1965
1970
1975
1980
1985
1990

FIGURE 3.2.

4.0. DEVELOPING IMPROVED OPERATIONAL PLANNING AND BUDGETING PROCEDURES

4.1. Sector Funding Requirements from the Government

The substantial investment of over 3000 Million pounds during the last twenty years on water and wastewater facitlities, with a similar amount anticipated to be spent over the remaining years of the Decade, will necessitate substantial increases in operational and maintenance expenditure. These increases are essential to ensure facilities are operated properly and protected by adequate maintenance. The present system of dealing with the Ministry of Planning and International Co-operation for investment plans and the Ministry of Finance for manpower and the operational and maintenance budget does not lend itself to the effective integration and understanding of the important links between investment and the subsequent operations and maintenance budgets. In order to ensure the Ministry of Finance are fully aware of the operational and maintenance requirements of sector organisations, it is important that investment strategies are supported by operational plans. These operational plans prepared by each organisation in the Sector, will need to detail anticipated levels of output and service to the public over the medium term, from both the existing facilities and the new treatment facilities, networks and collection systems as they are commissioned. Medium term operational plans for between three to five years will serve as a framework for the preparation of annual plans and financial budgets and assist sector organisations and the Ministry of Housing and Public Utilities in negotiations with the Ministry of Finance to secure adequate operational and maintenance budgets.

Details of the direct operating costs of the major city organisations are set out in Figure 4.1.0 overleaf. It can be seen that over the period 1982-83 to 1984-85, although budgets have increased in line with inflation, this takes no account of additional demands being met by the Sector. It is also apparent that, manpower costs are now a larger proportion of the direct operating cost budgets, having increased from 60% in 1982-83 to 70% in 1984-85, leaving a smaller percentage of the budget available for operations and maintenance costs. Whilst current training efforts being supported by foreign donors should help contain manpower costs as efficiency improves, it is apparent that operational and maintenance budgets for goods and services will need to increase substantially, once initial start-up assistance and initial supplies of spares for new facilities are exhausted.

National tariff proposals, when implemented will help reduce the funding required from the Ministry of Finance but it must be recognised that in the medium term, these tariff increases are unlikely to reduce significantly the need for additional budget allocations. It must also be recognised that not only direct operating costs are increasing, but other costs such as taxes, depreciation and interest, are also increasing. The implications of increased operating and maintenance costs (less tariff income) and increased investment requirements (less foreign donor facilities) mean that overall, the Sectors funding requirement from the State Budget for the major urban areas is increasing rapidly. The funding requirement has increased from LE 247 Million in 1982-83 to LE 410 Million in 1984-85, well below the LE 783 Million requested by the Sector for 1984-85.

WATER AND WASTEWATER SECTOR - MAJOR CITIES
EXPENDITURE ON OPERATING COSTS

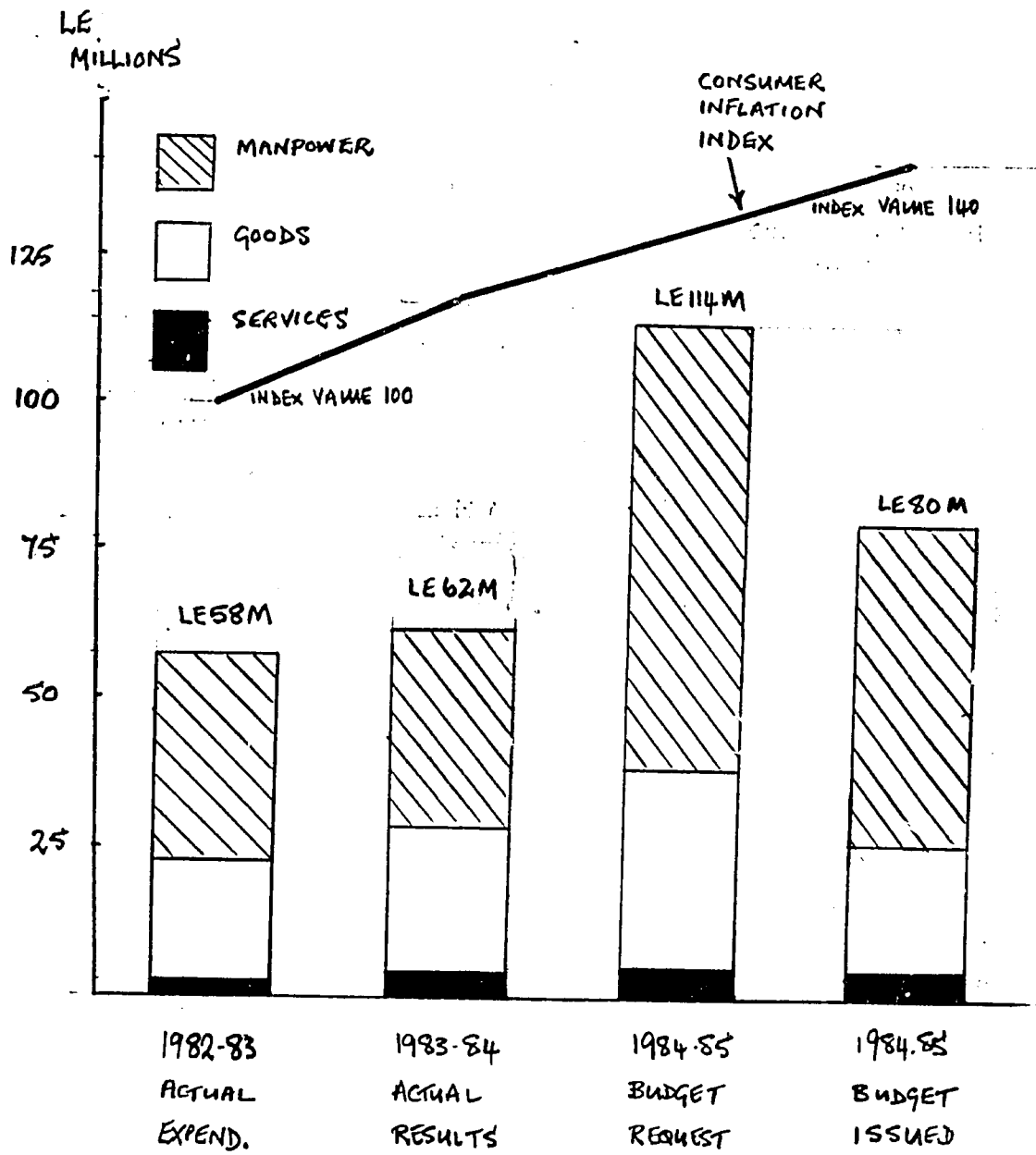

FIGURE 4.1.0.

WATER AND WASTEWATER SECTOR

INVESTMENT STRATEGIES, OPERATIONAL PLANNING AND FINANCIAL PLANNING

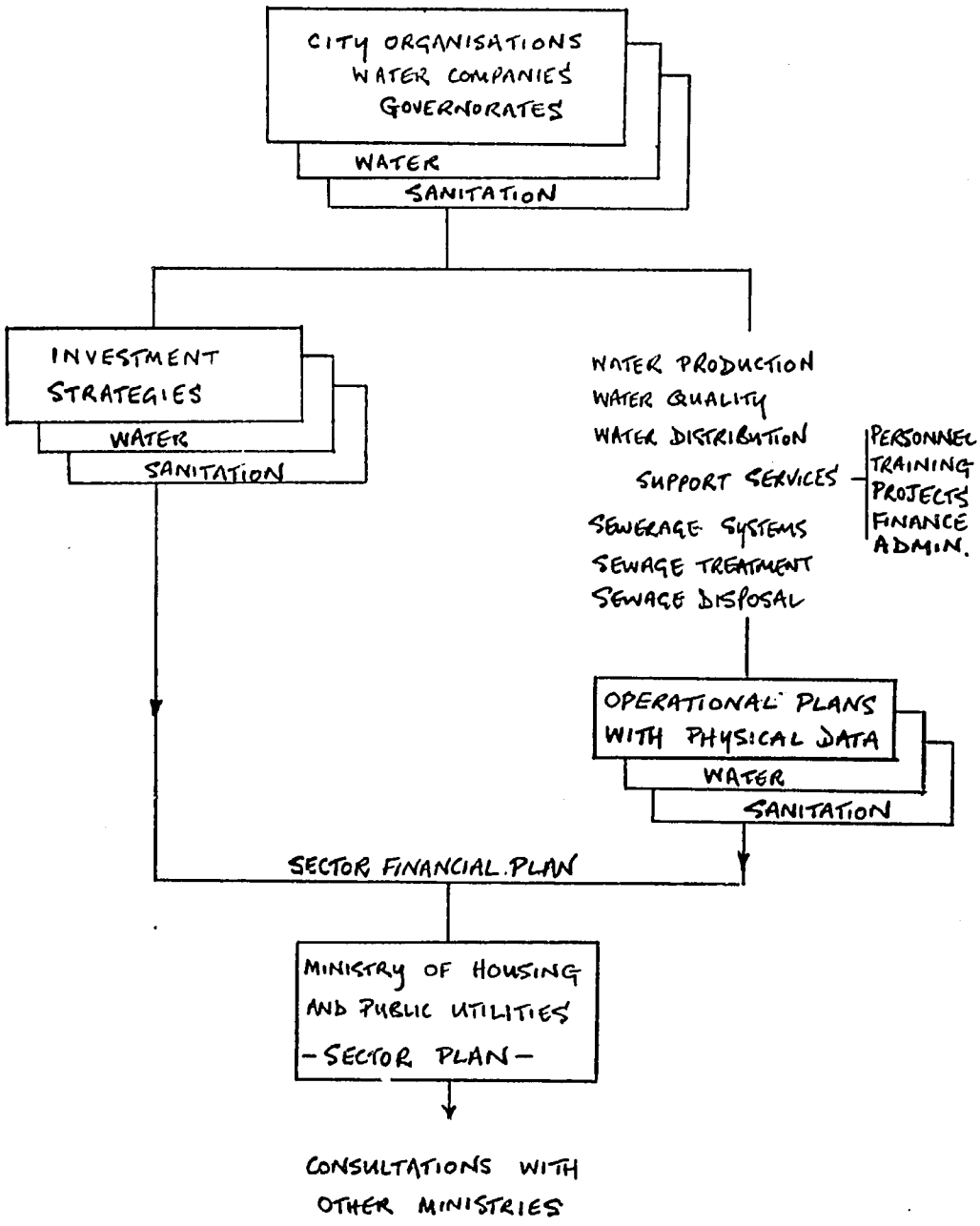

FIGURE 4.2.

WATER AND WASTEWATER SECTOR - URBAN AREAS
TOTAL FUNDING REQUIREMENT - STATE BUDGET

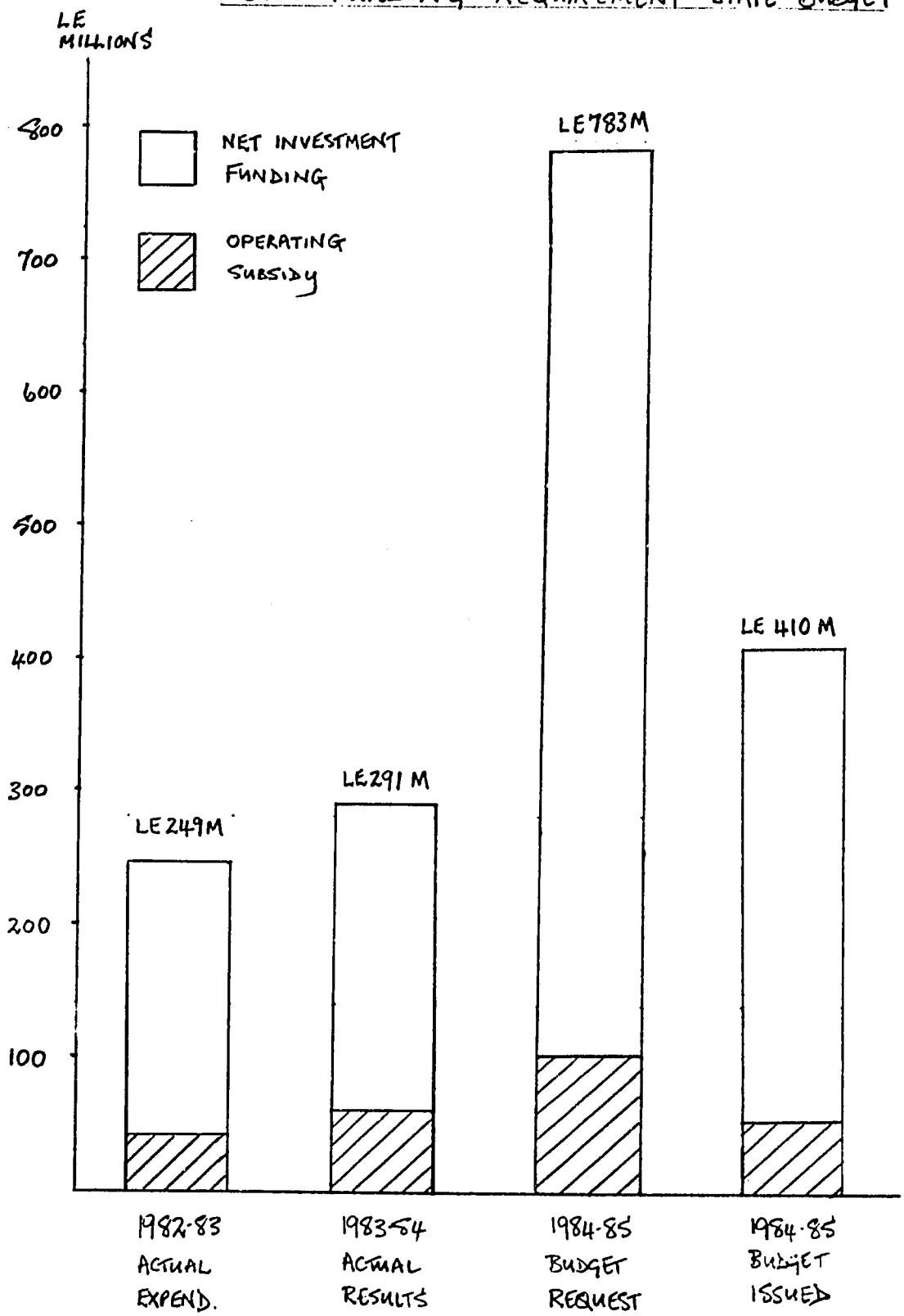

FIGURE 4.1.1.

In addition, the governorate's own investment needs for water and wastewater facilities and associated operational and maintenance budgets will increase this funding requirement further. Figure 4.1.1 attached illustrates the increasing level of funds required by the Sector in the urban areas.

4.2. Developing Operational and Financial Planning

The Ministry of Housing and Public Utilities has already begun the process of updating existing national plans for the Sector, concentrating initially on the urban areas where relatively good data exists, with the intention of also integrating data for the provincial and rural areas as it is developed. It is anticipated that the investment strategies will be supported by operational plans which clearly indicate the anticipated levels of service that will be provided by sector organisations and the methods which will be used to implement national policy goals. The operational plan of each organisation will need to deal, not only with the main functions e.g. water production and distribution, but also with the plans for the many support functions which are essential to the smooth running of sector organisations, in the provision of either water or sanitation services. These support functions or departments include personnel and training, project design and execution, planning and research, administration and financial services including revenue billing. The completion of comprehensive investment strategies and supporting operational plans to include both physical and financial information will enable the Sector and the Ministry to decide on policies which should be implemented and which can be afforded from the limited resources available to the Sector. It is also anticipated that by developing national investment strategies and supporting operational plans for the Sector, the existing financial planning process can be improved to help decide on investment and policy priorities and to present the case for additional resources to both the Ministry of Planning and International Co-operation and also the Ministry of Finance.

Figure 4.2. overleaf provides a diagram of how the financial planning system helps integrate the investment strategies and operational plans of the Sector.