PN-AAT-130

WATER AND SANITATION FOR HEALTH PROJECT

COORDINATION AND INFORMATION CENTER

Operated by CDM FIVE for the U.S. Agency for International Development

1611 N. Kent Street, Room 1002
Arlington, Virginia 22209 USA

Telephone: (703) 243-8200
Telex No. WUI 64552
Cable Address WASHAID

PROPOSED MEASURES FOR REDUCING COSTS IN INFRASTRUCTURE AND URBANIZATION PROJECTS FOR LOW INCOME HOUSING IN HONDURAS

WASH FIELD REPORT NO. 46

JUNE 1982

CDM FIVE is operated by Camp Dresser and McKee Incorporated; Principal Collaborators: Center for Educational Development in Health, Boston University; International Science and Technology Institute; Research Triangle Institute; University of North Carolina at Chapel Hill.

Prepared For:
Regional Housing Office in Central America
USAID Mission to Honduras
Order of Technical Direction No. 94

WATER AND SANITATION FOR HEALTH PROJECT

WASH

COORDINATION AND INFORMATION CENTER

Operated by CDM FIVE for the U.S. Agency for International Development

1611 N. Kent Street, Room 1002
Arlington, Virginia 22209 USA

Telephone: (703) 243-8200
Telex No. WUI 64552
Cable Address WASHAID

June 30, 1982

Mr. Ronald Nicholson
Mission Director
U.S. Agency for International
Development
Tegucigalpa

Attn: Mr. Francis Conway
Director of Regional Housing
and Urban Development

Dear Mr. Nicholson:

On behalf of the WASH Project I am pleased to provide you with fifteen copies of a report on Proposed Measures to Reduce Costs of Infrastructure and Urbanization Projects for Low Income Housing. This is the final report by Ing. Octavio Cordón M. and is based on his trip to Honduras from May 17 to May 29, 1982.

This assistance is the result of a request by the Mission on February 22, 1982. The work was undertaken by the WASH Project on May 6, 1982 by means of Order of Technical Direction No. 94, authorized by the USAID Office of Health in Washington.

If you have any questions or comments regarding the findings or recommendations contained in this report we will be happy to discuss them.

Sincerely,

Dennis B. Warner

Dennis B. Warner, Ph.D., P.E.
WASH Project Director

DBW:PFH:mcl

cc: Mr. Victor W.R. Wehman, Jr.
S&T/H/WS

CDM FIVE is operated by Camp Dresser and McKee Incorporated; Principal Collaborators: Center for Educational Development in Health, Boston University; International Science and Technology Institute; Research Triangle Institute; University of North Carolina at Chapel Hill.

WASH

Field Report No. 46

Republic of Honduras

Proposed Measures for Reducing Costs in Infrastructure and Urbanization Projects for Low Income Housing in Honduras

Prepared for the Regional Housing Office in Central America and the AID Mission to Honduras under the Order of Technical Direction No. 94

Prepared by:

Eng. R. Octavio Cordon
June 1982

Water and Sanitation for Health Project
Contract No. AID/DSPE-C-0080, Project No. 931-1176
is sponsored by the Office of Health, Bureau for Science and Technology
U.S. Agency for International Development
Washington, DC 20523

Contents

Chapter	Page
Acknowledgements	ii
1. Summary and Recommendations	1
1.1 Introduction	1
1.2 Summary of the Report	1
1.3 Conclusions and Recommendations	2
2. Background for the Project	3
3. Approach to the Study	4
3.1 Methodology	4
3.2 Committee Meeting	4
3.3 Visits to the Projects and Institutions	5
4. Cost Analysis	6
4.1 Overview	6
4.2 Water and Waste Disposal Systems	6
4.3 Interlock Systems	7
4.4 Other Costs	7
5. Identification of Problems	8
5.1 Requirements city-planners should fulfill	8
5.1.1 Effect of the regulations on costs	8
5.2 Administrative Procedures	9
5.2.1 Effect of Delays on Costs	10
6. Proposed Measures	11
6.1 Code for New Urbanization	11
6.1.1 Immediate	13
6.1.2 Short Run	13
6.2.3 Long Run	14
6.2 Legal Procedure for New Urbanization	14
7. Conclusions	18
References	19
Appendices	
A. Order of Technical Direction No. 94	20
B. Itinerary	28
C. Officials Interviewed	29
D. Photographs	31
E. Costs Adjusted by the Agencies or Promoters	34
F. Minimum Standards Proposed by Various Agencies	40
G. Study of Changes in the Regulations Presently Applied	47

ACKNOWLEDGEMENTS

The knowledge of the material and dedication of Jeff Boyer and Jorge Avalos from the Housing office made the consultant's work very simple and his stay very enjoyable.

The patience and assistance given by Rigoberto Centeno F. of SANAA allowed easy access to the information by arranging all of the necessary interviews without difficulty.

The frank discussions with Manual Lopez, Adan Lopez, and Humberto Puente, consultants and promoters of housing allowed me to know other points of view.

A good number of the ideas in this report are from the professionals noted, as well as the rest of the committee members, whose support is appreciated.

The author is particularly in debt to Alfred Szarata, Sanitation Engineer, Daniel Gonzalez, Geotechnic Engineer, and Carlos R. Cordon, civil engineer with the firm of Cordon and Merida. These engineers did the calculations and prepared the cases in Appendix G. The presentation, conclusions, and errors are entirely my responsibility.

Chapter 1

Summary and Recommendations

1.1 Introduction

The Central American Regional Housing Office of the AID mission in Honduras requested the assistance of the WASH project to gain support in the area of infrastructure and sanitation systems.

Engineer O. Cordon, a specialist in the field of sanitation engineering in Central America, was the WASH consultant. He evaluated the procedures and regulations used in the design and construction of infrastructure systems by the Honduran government agencies responsible for this matter, which applied to projects financed by the Housing Office

1.2 Summary of the Report

Chapters two and three discuss the background of the study and how the information was compiled and evaluated.

Chapter four analyzes the costs of fresh water and waste disposal systems projects presently under construction. These costs account for between 8 and 12.7 percent of the price of each dwelling, without including the interlock system, which adds 3.2 percent to the cost.

Later, the report identifies the problems facing city-planners which raise the cost of housing: the lack of a written code with standards applicable to public interest projects, as well as the costs that cause delays in approving building permits, add to the price of housing. Chapter five shows how reducing the regulations on a project could provide a savings of 20 percent. Similarly, it shows that a six month delay adds L.12.91 to the home-buyer's monthly payments.

Chapter six proposes drafting a Code for New Urbanization to help reduce these problems. The code should include minimum standards for infrastructure systems in public interest projects that are simple and expeditious. The chapter also proposes that city-planners of public interest projects immediately revise projects presently being undertaken and developed, and that public service institutions accept these changes, according to certain minimum standards. These minimum standards include: decreasing the depth of the ditches, accepting double service hook-ups of 1/2" for fresh water and 4" for sewage, and accepting minimum diameters in the systems of 1 1/2" in closed circuits and 2" at open ends of fresh water networks, and 6" in sewage networks.

The appendices include:
- A glossary for the WASH study
- The consultant's itinerary
- Some photographs of the projects visited
- Adjusted costs for the city-planners

- The minimum requirements studied by the city-planners
- A series of studies which analyze the influence of a particular regulation on costs, or question a guideline which is presently in force.

1.3 Conclusions and Recommendations

The most relevant conclusions of this report are: the need to draft a code and legal procedures which should be distributed to the parties involved; the need to study the implementation of the fresh water and health services at different stages and levels of service. The preceding recommendations are suggested with the aim of reducing the cost of the systems in order to serve the greatest number of people with the available funds.

The most important recommendation, applicable immediately, is the revision of projects presently being undertaken or developed, applying the regulations mentioned in the study.

Chapter 2

Background for the Project

The Regional Housing Office is financing housing projects of importance to the public in all of Central America through a variety of means: a) improvement of underdeveloped neighborhoods,* b) low cost housing provided by state agencies, and c) low cost housing built by private companies.

U.S. AID currently has a fund of U.S. $40 million for housing projects in Honduras which it is currently using (1982). The projects are being developed in the two largest cities in the country: Tegucigalpa and San Pedro Sula. In these houses public services such as fresh water, sewage, and drainage are provided, in the first case, by SANAA and in the second by DIMA. The local government of each city provides a garbage collection service while in both cities, the National Electric Power Company (Empresa Nacional de Electricidad) supplies electricity.

The Regional Housing Office, during the course of carrying out these projects in Honduras, has identified (among others) the following problems relating to the provision of fresh water, sewage, and drainage:

- Delays in obtaining designs on the part of the agencies charged with providing these services

- Complex construction and design requirements that unnecessarily raise the cost of the house

The results of this report will be presented to the ninth COPDIVU Conference to be held in Tegucigalpa from the 12th to the 16th of July 1982. These results may then be incorporated in projects being developed in other Central American countries.

---

*Often called "depressed areas" in the United States.

Chapter 3

Approach to the Study

3.1 Methodology

The information was studied and compiled during the two weeks that the WASH consultant was in Honduras, working with a committee composed of personnel of the various organizations concerned with matters relating to infrastructure for public development projects.

3.2 Committee Meeting

The Committee met on three occasions and was under the direction of Engineer Rigoberto Centeno Fiallos, Chief Consultant of SANAA and representative of the Engineering College of Honduras. During these meetings, the committee dealt with the following subjects:

1.a The meeting

- o Information to the participants about the study proposal

- o The participants recommended as subjects for discussion:
  - The cost of money; the high rate of interest
  - High costs of construction for water and waste disposal systems which then affect the price of the houses
  - High cost of the service connection to the city's system, charged entirely to the particular community instead of to the whole benefited area
  - Need to use low cost areas suitable for development
  - A minimum depth for the installation of tubing of 1.5m, even larger, especially in areas of pedestrian traffic
  - Designs for hydrants which are incompatible with the firefighting equipment presently in use
  - Inflexibility in prescribed design standards
  - Lack of written standards which are agreed to and distributed to the affected parties
  - Minimum diameters are still considered too large
  - The possibility of using a central meter for housing units and dividing the costs of the services
  - Evaluation of the share per capita
  - Evaluation of changes in demand
  - Consideration of the suitability of pressure zones greater than 50mts in very hilly areas
  - Accepting open distribution systems

2.a The meeting

The use of appropriate technology was fully discussed. Appropriate technology was defined as being of the greatest public interest, generally accepted within the region, while also being economical.

The reduction of water consumption was suggested. This would be accomplished by installing systems with different supply allotments for those systems that may provide different levels of service; at all times the committee tried to revise the way of dealing with the supply problem.

3.a The meeting

The committee was presented with the results of the evaluation and a draft report of the visit.

3.3 Visits to Projects and Institutions

In order to obtain first hand information the committee visited various projects currently in operation. Three operations were visited in Tegucigalpa and two in San Pedro Sula. These operations illustrate the diversity of the projects being financed through the Housing Office.

- o Improvement of underdeveloped neighborhoods, providing them with infrastructural services
  - Tegucigalpa: The 3 de Mayo colony, a project under the auspices of GMDC
  - San Pedro Sula: Chamelecon, a project under the auspices of DIMA
- o Housing and other construction through private initiative
  - Tegucigalpa: Centroamerica Oeste colony, a project carried out by Promotora Nacional, S.A. of C.V.
  - San Pedro Sula: Paz Garcia Sur Satellite City, a project constructed by Constructora del Aguila.

The projects were visited with Engineer Centeno, coordinator of the committee and Engineer Avalos of AID. Personnel from the promoters, construction contractors, supervisors, owners, finance agencies, and public service agencies were also present during these visits.

Appendix D contains photographs of some important aspects of this study.

Additionally, we interviewed key personnel in various agencies and investment companies to assess personally their viewpoints on the standards and their application.

Chapter 4

Cost Analysis

4.1 Overview

In order to assess the severity of the problem the committee examined the costs of the government agencies and/or investors. These costs are presented in appendix E and analyzed in this chapter. The costs analyzed are summarized in tables 3-1 and 3-2.

4.2 Water and Waste Disposal Systems

One should note that the cost of the types of infrastructure studied in this report comprise between seven and 11 percent of the cost of the houses. Also, the cost of providing these services, not including the interlocking of these services with the larger system, ranges from L.154 to L.403 per house for fresh water and from L.247 to L.716 per house for sewage. If we assume an average of six people per house, the cost per person for providing water and waste disposal services ranges from L.73.9 to L.186.5, with an average of L.120.5 per person.

Table 3-1
% of the Cost of the House

Item	CAO	PGS	HE
Fresh Water System	3.13	4.91	2.40
Waste Disposal System	7.05	6.17	5.38
Total	10.18	11.08	7.18
Rain Water	2.5	--	1.01

Table 3-2
Cost of the Item in Lempiras
(1 Lemp.=0.5 US $) Per house served

Item	CAO	PGS	HE	CMDC
Fresh Water System	293.74	196.29	153.69	403
Waste Disposal System	539.80	246.87	343.97	716
Total	833.54	443.16	497.66	1119

Abbreviations:

CAO - Centroamerica Oeste/Tegu; private
PGS - Pay Garcia Sur/San Pedro; private
HE - Hato de Enmedio/Tegu; INVA
CMDC - Metropolitan Council of the Central District/3 de Mayo; Tegu; Infrastructure for Underdeveloped Neighborhoods

The cost of providing a rainwater drainage system is relatively small, varying between 1 and 2.5 percent of the cost of the house. In the construction sites examined this is done through surface canals which take advantage of the topography of the land and promptly discharge the water in the nearest brook (see appendix D).

4.3 Interlock Systems

The facilities needed for interlocking the systems of the housing units to the city's own system add a high cost to the price of the house as can be seen from the information about Centroamerica Oeste colony (L.244.34/house-3.19 percent of the cost). The amount of the cost is variable and depends on the location of the housing unit in relation to the city's services.

4.4 Other costs

One must note that only in the information about the Centroamerica Oeste colony are the financing and other indirect costs included in the cost of the house. These costs represent 8.65 percent of the selling price; the other projects only include direct costs.

In the Centroamerica Oeste Project, the investor has calculated an inflation rate of 12.4 percent, above the cost of the house. In six months this is equivalent to a twenty five percent annual rate of inflation.

Chapter 5

Identification of Problems

Keeping the title of this report, "Proposed Measures for Reducing Costs..." in mind, the problems were grouped into the two areas presented in this chapter, which in one way or another affect the construction costs of the systems.

5.1 Requirements that the city-planners should fulfill

The "lack of standards" was mentioned both during committee meetings and during visits to other groups. Only DIMA has a document entitled Design Standards for New Urbanization. SANAA has an assortment of documents. Indeed, the variety of names and titles of these documents suggests that each was made for a different purpose.

Although their content is basically the same, the large number of documents confuses the promoters, consulting engineers, and personnel from the Department of Design and Supervision of SANAA. This confusion leads to an inconsistent application of the rules.

One example of the inconsistency with which the rules for city-planners are applied is the permission for private companies to construct double service couplings (Centroamerica Oeste), i.e., two houses connected to the main system by a single tube. On the other hand, an infrastructure project for an underdeveloped neighborhood requires a single coupling for each house (3 de Mayo). Likewise, when SANAA personnel choose a certain regulation it is inflexibly applied and doesn't cover all of the factors important to the city-planners. Additionally, there are no special rules for public housing projects. By applying rules made for more expensive dwellings, the cost of public housing increases.

The city-planners have already cited these problems and Appendix F presents those which, according to their experience, are appropriate for use in future projects.

5.1.1 Effects of the regulations on costs

The report of the consulting engineer was studied in order to demonstrate the savings that can be achieved by accepting some changes in the regulations. The report is an account of the design and budget of a project under construction, and serves to emphasize the cost sensitivity to these changes.

Tres de Mayo Project, Tegucigalpa (Waste Disposal System)

- o There should be agreement that all of the 8" pipe could be replaced by 6" pipe. This change would also provide the possibility of having a steeper slope.
  Savings of 10,421 mts X 21.4 L.22,301.00

- o Reducing the size of the inspection wells by 30 percent by making a steeper gradient.
  Savings of 151,400 x 30% L.45,420.00

- o Agreeing to double couplets and 4" pipe instead of 6" pipe.
  Savings in pipe and installation L.12,574.00
  Savings in ditching and filler L. 28,800.00

- o Reducing the number of manholes in the service couplings.
  Savings of L.28,575.00

  Total Savings L.194,475.00

- The total cost is L.936,821, representing a cost of L.716 per house.

- Savings are 20.76 percent or L.148.64 per house

- A service charge of 15% applied to the total cost represents a savings of L.11.55 per house per month.

- With the savings, the cost per house is L.567.36 plus a service charge of L.915 per month. This savings gives the owner the equivalent of L.148.64/9.15 = 16 lower monthly payments.

- The above information proves the possibility of reducing costs through the use of less stringent standards.

Additional analyses of the effect of regulations on costs are presented in greater detail in Appendix G.

5.2 Administrative Procedures

The primary obstacle confronting the city-planners, once they decide to begin their projects, is to obtain the permits required by the public service institutions (SANAA in Tegucigalpa and DIMA in San Pedro Sula, respectively).

The greatest difficulties have been cited in Tegucigalpa where water and waste disposal services are provided by SANAA. The Department of Design and Supervision of SANAA which both revises the regulations and grants approval for projects, has had a change in high level personnel in the past few years. In addition to this is the problem that any standard procedures that exist have become institutionalized through custom and therefore aren't recorded.

The present Department Head prepared an outline describing each step of the procedure for establishing a housing project. He identified twenty-three steps, most of which deal with SANAA. SANAA, when informing the planner of its decision, sends a letter signed by the General Director.

The lack of an agreed upon, written set of regulations allows the process to become subject to the personalities involved. This, then, gives rise to differences of opinion among these individuals. SANAA personnel constantly find

themselves under pressure from the city-planners (whether state or private) to change their requirements. In addition, those city-planners unfamiliar with the procedure and/or regulations which SANAA may apply, don't know which rules to follow.

All of these problems make the system slow and subject to the personalities involved.

Since DIMA (Municipal Water Department) of San Pedro Sula is a smaller body, it is simpler to operate. Moreover, DIMA has a written procedure which applies to all city-planners in all cases.

5.2.1 Effect of the Delays on Costs

The lack of a clearly defined and generally recognized procedure specifying the maximum time which a service institution may take to handle a request delays the start of the projects and thereby raises costs.

The projects are financed at an interest rate greater than 15 percent. Assuming an installment plan designed to be paid in 10 years (120 months), this means a monthly payment of L.16.10 for every L.1000 of the cost of the house.

Assuming an average inflation rate of 20 percent and an interest rate of 15 percent for every month's delay in the planning and/or construction of the project, an additional L.0.27 per month is added to every L.1000 of the cost of the house. This means, for example, that for a house costing L.8000 a delay of six months adds a total L.12.90 to the owner's monthly payment and an amount of L.1548.82 in the ten years of payment.

Chapter 6

Proposed Measures

The proposed measures are directed towards resolving or minimizing the problems in the two areas described in the previous chapter. The operative measures, i.e., those concerning the use and acceptance of the regulations, should be drafted by the city-planners and those institutions which provide such services. Those proposals of a strictly administrative nature should be drafted by the public service institutions. However, the committee could serve as an excellent vehicle for setting in motion the movement toward the implementation of these proposals.

6.1 Code for New Urbanization

The guidelines that would specify the duties of the public service institutions *vis a vis* the city-planners are of primary importance. These rules would assure the planners that the facilities constructed by others are well done, that they can be operated without excessive costs during the period they are in use and that they will adequately provide the services expected of them. However, excessive specifications in the regulations lead to facilities which aren't used to capacity or unnecessarily increase the construction costs, wasting the country's resource which could otherwise be invested in other projects.

Each public service institution should abide by the Code for New Urbanization which stipulates that the institution consider minimum standards for facilities that come under their jurisdiction. This code or set of regulations should be as simple as possible. It should regulate only the essentials and avoid becoming a design manual or a list of construction specifications. The institution might find it convenient to produce a manual of design criteria or feasibility studies like those in the Denver Area cited in Reference 1. However, these should only be an aid to engineers and supportive of the Code of New Urbanization, never a substitute for them.

The Code will be able to cite other institutions' norms and standards, although preference should be given to those published by ICAITI that are applicable in all of Central America. The guidelines setting standards for formats and scales is an example of these rules.

The Code should indicate acceptable materials and the standards under which these materials will be accepted. For example: PVC tubing is acceptable; standard AWW900, or Ductile Cast-Iron tubing, ISO2531 standard, are also acceptable.

Specifications for construction materials and methods are complimentary to plans and are the designing engineer's responsibility. The New Urbanization Code should set guidelines concerning how the system's elements and facilities are expected to function and not dictate how they should be constructed.

The Code's preparation should be entrusted to a consultant well-experienced in design, construction and supervision of water and sanitation services who is also familiar with local practices. An inexperienced individual, unfamiliar with construction systems (especially the Honduran systems), would only produce a code academic in nature, or one that employs "rules of thumb" used in other areas; for example: "in the diameter changes of drainage tubing, the coincidence of points corresponding to 0.8 in depth will be observed", this stipulates that aside from being irrelevant, it gives hydraulically incorrect results. (See Ref. 1, Vol. 1 Storm Sewer, Section 8.1).

Standards employed in the Code should be carefully analyzed employing first-hand references like those cited from 1 to 4, and interpreting the effect its adoption has on the cost of projects, their operation and maintenance, and the general Honduran situation. Blind adoption of a particular standard should be avoided, questions should be raised until appropriate measures are used. Some studies of norms currently in use are presented in Appendix G and may serve as a guide for selecting measures that are acceptable for the Code.

Additionally, these standards should be inflexible and clearly stated in a manner that would not give way to erroneous interpretations. However, so as not to be dogmatic the Code should include a procedure for requesting an exception to the rule that the interested party may present in writing technically and economically justifying the change requested. This procedure would allow for innovation and improvement in the Code; those petitions that are accepted may be included in the document's addendum.

The new Code should include special standards for social interest projects that would allow the objective of apportioning a minimal low cost for basic sanitation to be fulfilled.

Upon consideration, the Code should be approved by the public service institution's senior officer and published solely for consumer use. The CICH* will have to play a role by way of its representatives in the national institution's Juntas Directives in order to coordinate the approval, although it could publish and distribute the Code among the subscribers, charging for the service.

Periodically, SANAA and DIMA should conduct a standards' evaluation, addendum issuance and update the regulations.

The Code should state in its requirements that appropriate measures should be taken to ensure the continued operation of water and sewerage systems during and after catastrophic situations (i.e., earthquakes and hurricanes) once these systems have been constructed. Climate variables should be a factor in the planning and construction of Honduran water and sanitation facilities.

Because a well-established Code requires a period of analysis, it is proposed that the following measures be considered for adoption:

---

*CICH Colegio de Ingenieros Civiles de Honduras (College of Honduran Civic Engineer)

6.1.1 Immediately

Both city-planners (private and public) should propose, and DIMA and SANAA accept, the revision of completed and developing facilities, in order to include the enumerated changes in social interest projects.

Fresh Water (Drinking Water) System
- accept double service of 1/2"
- agree to open systems, calculating adaptability to ends
- agree to 1½" tubing fed through both ends
- reduce depth of installation in pedestrian streets to 0.60 m. and in vehicular streets to 0.80 m.
- reduce the number of hydrants
- reduce the number of valves so as to insulate larger areas/sectors of water
- insist on strict control over construction methods and materials (in the public system as well as in residential areas).

Sewerage System
- agree to double service connections
- accept 6" tubing in main streets
- reduce minimum installation depth under sidewalks where the sewer might interfere with the fresh water system
- agree to curved drainage lines (minimum radius 30 mts)
- reduce the size of water meters
- accept inspection wells with lower chutes (0.60 m) using PVC pipes and without plaster in Tegucigalpa and with concrete manhole covers an sidewalks
- insist upon strict control over construction methods and materials (in the public system as well as in residential areas)

Other
- identify other remote aspects of water and sewerage systems that may be significant in reducing costs.

6.1.2 Short Run (maximum 6 months)

City-planners should insist that public service organizations do the following:

- Identify alternative measures for financing so that one city-planner doesn't assume the entire cost for connecting the city's systems; for example: By using CMDC's appraisal, the institutions could obtain financing from private banks.

- Edit, approve and publish the Code of New Urbanization for the cities of Tegucigalpa and San Pedro which would include special treatment for social interest projects.

- Present methods of cleaning sewage that would allow the distance of 100 m between manholes in use to increase.

- Analyze drinking water supply per capita so that the quantity of sewage juxtaposed with that of drinking water brings about the necessary changes and an analysis of these changes.

- Agree to the amount of water to be served in urbanized sectors, apportioning costs among the subscribers in order to reduce the number of meters and the cost involved with pricing and billing.

- reduce the time used for designing in order to hold down costs due to interest payments

- SANAA and DIMA annually publish their investment plans so that city-planners will be familiar with the areas where public services are to be constructed.

6.1.3 Long Run (after 1 year)

- Promote alternatives to granting services so that less water is consumed. This includes restricting the demand which is depleting the household supply, reducing the number of watering units, avoiding the use of high water consumption devices, and making the shower, garden sprinkler, basin and trough hook-ups with a pipe that's smaller in diameter than the one that's currently on the market.

- City-planners should propose and public services accept, projects whose implementation procedures may deviate from traditional methods. The selection should be based on a combination of technical, economical and social criteria which respond to the questions: "Which is the most inexpensive and feasible technology that subscribers are able to afford was opposed to other alternatives?" Likewise, "Will the service organization be able to operate this technology?"

6.2 Legal Procedure for New Urbanization

It should be recognized that every government agency has its own internal structure, a bureaucratic system that determines the flow of information. Such is the case with SANAA and DIMA. Nevertheless, authorization procedure and service solicited by individuals and agencies should be as flexible as possible until it's feasible to implement them.

The authorization procedure for new urbanization should be as simple as possible, especially for those projects which are of social interest since they aid the city and country in general, in addition to those individuals directly benefitting from this service.

It is recommended that keeping procedures flexible be a primary objective although every institution (DIMA and SANAA) will invariably implement them in accordance with their own organizational structure. The adjacent flow chart identifies the minimal steps taken in a procedure of this nature.

Some general aspects to be considered when making a procedure flexible are:

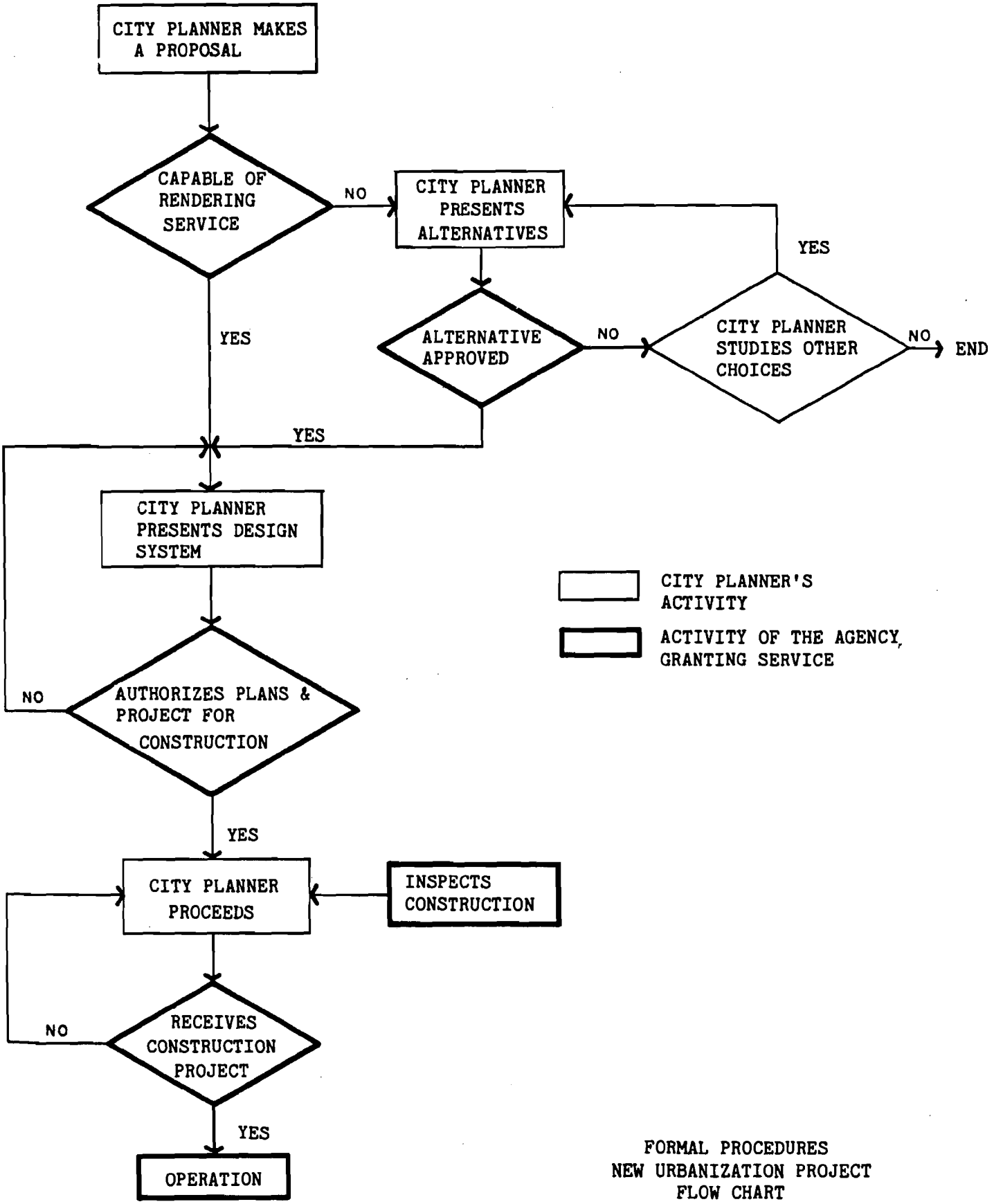

FORMAL PROCEDURES
NEW URBANIZATION PROJECT
FLOW CHART

- All projects (plans, graphs and documents) submitted for consideration to an institution that grants public services should bear the signature of an active engineer in accordance with Honduran law.

- The written proposals relative to the construction in question should be directly between the institution's public services department head and the city-planner's responsible engineer.

- The city-planner should be notified of the proper procedure and the service institution should insist upon a specified amount of time to resolve any conflicts relating to the procedure.

- A more expedient procedure should exist for social interest projects.

- Only the final approval should have a V° B°* from the service organization's General Manager.

- The Division entrusted with project approval should have a condensed plan/chart (of the existing as well as of future plans) of the city's public service systems.

- Said division should assume the responsibility of adopting interior measures in case it isn't feasible to implement the first design or plan.

- It should be required of city-planners to develop their projects where public services don't exist or aren't extremely costly to the city providing them.

- Publish the "Code of New Urbanization" so that the important information concerning design and materials to be utilized can be used as a model.

- The procedure should be designed so that the institution-city-planner relationship isn't personalized but remains on a professional level.

- The public service organization need not revise calculations and projects in detail, only verify that minimum requirements are being met.

The slightest change in the design reduces the designing engineer's responsibility, making the revising engineer individually and collectively rsponsible for any errors or omissions the designing engineer may have committed. In addition, this revision takes unnecessary time, wasting valuable company resources.

Projects that have been presented and don't meet the requirements should be returned, stamped "Returned for Corrections".

V° B° = Visto Bueno - set after a draft, license or permit and means that the preceding document has been examined and found to be correct.

Those projects successfully meeting the requirements should be returned stamped "authorized for construction under the responsibility of Collegiate Engineer No. __, for a period of 2 years."

- Edit inspection guidelines so that they are clear and uncomplicated; Construction specifications are complete to the letter and are the consultant's responsibility.

- The service institution should require each city-planner to contract the services of an engineer to supervise construction continuously so that he'll be able to accept assignments designated "under the professional responsibility of Civic Collegiate Engineer No. ___" who is preferably the designing engineer.

- The service organization's inspections of construction's activities should be sporadic and selective. The city-planner should also be present during inspections.

- City-planner should maintain public records certifying the quality of materials and products used in construction, to be delivered to the service organization together with final plans upon the acceptance of the proposal.

Chapter 7

Conclusion

The report identifies the problems presently encountered in Honduras during the development of water and waste disposal systems in new low income housing projects.

Because of the nature of the development, only general ideas are proposed for consideration to be included in the regulative and administrative procedure that each institution must develop. Nevertheless, it is considered important to project that:

- The regulation must be simple, containing minimal standards complementary to the country's situation, and yet filling basic sanitation requirements.
- The regulation should allow the possibility of implementing new ideas for providing water and sanitation services.
- City-planners should critically study their projects for new methods to reduce costs.

REFERENCES

1. Wright - McLaughling Engineers. Urban Storm Drainage Criteria Manual. 2 Volumes. National Technical Information Service, U.S. Department of Commerce, PB 185262. March 1969.

2. Engineering-Science, Inc. Feasibility of Curvilinear Alightment for Residential Sanitary Sewers. Federal Housing Administration. Tech. Studies Prog. 1959.

3. Mara, Duncan. Appropriate Technology for Water Supply and Sanitation. World Bank, February 1982.

4. Propuesta sobre Normas Minimas de urbanizacion para los Paises del istmo Centroamericano. OEA, OPS/OMS. Centro Panamericano de Vivienda y Planeamien to. Julio 1968.

5. Norma Centroamericana. Dibujos, Formatos y Escalas. ICAITI 1018.

APPENDIX A

WATER AND SANITATION FOR HEALTH (WASH) PROJECT
ORDER OF TECHNICAL DIRECTION (OTD) NUMBER 94
May 6, 1982

TO: Dennis Warner, Ph.D., P.E.
WASH Contract Project Director

FROM: Victor W.R. Wehman, Jr., P.E., R.C.
A.I.D. WASH Project Manager
A.I.D./S&T/H/WS

SUBJECT: Provision of Technical Assistance Under WASH Project Scope of Work for U.S. A.I.D./Honduras and Regional Housing and Urban Development Office (RHUDO)/Central America

REF:
A) Memo Olinger (PRE/H)/Wehman (S&T/H) dated 17 Nov 81
B) Tegucigalpa 1080 dated 9 Feb 82
C) Memo Olinger (PRE/H)/Wehman (S&T/H) dated 19 Feb 82
D) Terms of Reference-Donaldson (WASH)/Wehman (S&T/H) developed with (RHUDO) and Olinger (PRE/H)

1. WASH contractor requested to provide technical assistance to U.S. A.I.D./Honduras and RHUDO/ROCAP as per Reference B, paragraphs 2-5 and Reference D, paragraphs 1-3.

2. WASH contractor/subcontractor/consultants authorized to expend up to 40 (forty) person days of effort over a 4 (four) month period to accomplish this technical assistance effort.

3. Contractor authorized up to 22 (twenty-two) person days of international and/or domestic per diem to accomplish this effort.

4. Contractor to coordinate with RHUDO representative in Honduras, Chief Engineer and Health Officer U.S. A.I.D. in Honduras, PHE/H (Olinger), and Honduras Desk Officer. Each of the above should receive copies of this OTD along with periodic progress reports and ETA information as appropriate.

5. Contractor authorized to provide up to 3 (three) international round trips from consultant's home base to Washington, D.C. (for briefings) to Honduras, to Washington, D.C. for debriefing and return to consultant's home base.

6. Contractor authorized local travel in Honduras as necessary to accomplish technical assistance effort NTE $800 (eight hundred) without prior written approval of A.I.D. WASH Project Manager.

7. Contractor authorized to obtain secretarial, graphics or reproduction services in Honduras as necessary to accomplish tasks. These services NTE $700 (seven hundred) without written approval of A.I.D./WASH Project Manager.

BEST AVAILABLE COPY

8. Contractor authorized to expend up to $700 (seven hundred) for training materials for printing/support services associated with Phase II workshop in Reference D.

9. WASH contractor will adhere to normal established administrative and financial controls as established for WASH mechanism in WASH contract.

10. WASH contractor should definitely be prepared to administratively or technically backstop field consultants and subcontractors.

11. Reports will be submitted and approved as per last paragraph page 1 of Terms of Reference document (Reference D).

12. Mission should be contacted immediately and technical assistance initiated before 15 May 82 for Phase I and by 12 July 82 for Phase II (see Reference D).

13. Appreciate your prompt attention to this matter. Good luck!

C-188

November 17, 1981

MEMORANDUM

TO: S&T/HEA, Victor Wehman

FROM: PRE/H, David S. Olinger 632-4283

SUBJECT: WASH Technical Assistance to RHUDO/Central America

Francis Conway, Chief of the Central American Regional Housing and Urban Development Office (RHUDO) has expressed interest in obtaining WASH's assistance to conduct a seminar on appropriate design standards for water and waste disposal in low income shelter projects.

The seminar would take place in Honduras, with the preferred dates being February-March 1982. For information purposes, there are two outstanding HG programs authorized for Honduras with a combined authorization exceeding $25,000,000. Final contract negotiations for all or a portion of this total amount are presently underway with U.S. investors.

Mr. Conway will be in Washington during January and I will call then to arrange a meeting to discuss this possibility in greater detail.

cc: Jim Beverly, WASH
Francis Conway

Received ST/HEA (Wehman) 11/18/81
Passed to WASH 11/18/81

 BEST AVAILABLE COPY

PAGE 01 TEGUCI 01080 101740Z 4357 016517 AID9906
ACTION AID-35

ACTION OFFICE HO-04
INFO LACE-03 LADP-03 LADR-03 FHLB-01 HUD-02 RELO-01 MAST-01
/018 A1 1111

INFO OCT-00 ARA-16 AMAD-01 /052 W
247510 101755Z /38

R 092203Z FEB 82
FM AMEMBASSY TEGUCIGALPA
TO SECSTATE WASHDC 6594

UNCLAS TEGUCIGALPA 1080

AIDAC

STATE FOR PRE/H

E.O. 12065: N/A
SUBJ: TECHNICAL ASSISTANCE

1. RHUDO/ROCAP REQUESTS THE SERVICES OF CONSULTANTS TO WORK FOR A PERIOD OF 3-4 WEEKS IN FEBRUARY-MARCH 1982 TO EVALUATE THE IMPACT ON COSTS OF DESIGN STANDARDS AND SPECIFICATIONS FOR INFRASTRUCTURE SYSTEMS IN HONDURAS' LOW-COST HOUSING AND UPGRADING PROGRAMS.

2. PROPOSED SCOPE OF TECHNICAL SERVICES TO BE CARRIED BY A QUALIFIED CIVIL ENGINEER WITH EXTENSIVE FIELD EXPERIENCE AND SPANISH CAPABILITY INCLUDES THE FOLLOWING:

A. REVIEW OF EXISTING DESIGN STANDARDS AND SPECIFICATIONS OF SANAA AND CIMA (HONDURAS' TWO WATER SEWERAGE AUTHORITIES) AND EVALUATE THE CONSISTENCY OF THEIR INTERPRETATION AND ACTUAL APPLICATION IN PLAN APPROVAL PROCESSES;

B. EVALUATE THE APPROPRIATENESS OF EXISTING DESIGN STANDARDS AND SPECIFICATIONS GIVEN TYPICAL TERRAIN AND SOIL CONDITIONS FOUND IN TEGUCIGALPA AND SAN PEDRO SULA. RECOMMEND SPECIFIC MEASURES THAT COULD BE TAKEN TO REDUCE PROJECT COSTS IN PROJECT PLANNING AND DESIGN STAGES.

3. RHUDO/ROCAP WILL SET UP A COORDINATING WORK GROUP TO WORK WITH THE CONSULTANT CONSISTING OF REPRESENTATIVES OF APPROPRIATE MINISTRIES, PRIVATE CONSTRUCTION CONTRACTORS AND CONSULTING ENGINEERS.

4. CONSULTANT SHOULD TRAVEL TO TEGUCIGALPA AND SAN PEDRO SULA FOR THREE WEEKS IN FEBRUARY TO MEET COORDINATING WORK GROUP AND TO FAMILIARIZE HIMSELF WITH HONDURAS' WATER AND SEWERAGE INSTITUTIONS AND PREVAILING DESIGN STANDARDS, SPECIFICATIONS AND CONSTRUCTION PRACTICES. HE WILL RETURN TO THE STATES TO PREPARE HIS PRELIMINARY RECOMMENDATIONS OF COST-REDUCTION MEASURES IN THE FORM OF A WRITTEN REPORT IN SPANISH.

5. FOLLOWING RHUDO/ROCAP AND COORDINATING WORK GROUP'S REVIEW OF HIS PRELIMINARY RECOMMENDATIONS, A SECOND TRIP FOR ONE WEEK TO HONDURAS IN MARCH-APRIL TO FINALIZE HIS RECOMMENDATIONS AND PRESENT THEM TO A BROADER GROUP.

6. RHUDO UNDERSTANDS FROM PRIOR CONVERSATIONS WITH PRE/H THAT CONSULTANTS AVAILABLE UNDER AID/W CONTRACT CAN PERFORM THIS TASK AND NO MISSION FUNDING WILL BE REQUIRED.
NEGROPONTE

BEST AVAILABLE COPY

UNITED STATES INTERNATIONAL DEVELOPMENT COOPERATION AGENCY
AGENCY FOR INTERNATIONAL DEVELOPMENT
WASHINGTON D C 20523

February 19, 1982

MEMORANDUM

TO: S&T/HEA, Victor Wehman

FROM: PRE/H, David Olinger

SUBJECT: WASH Technical Assistance to RHUDO/Honduras

Attached hereto is a telegram from RHUDO/Honduras requesting technical assistance with regard to design standards, specifications and costs of infrastructure systems for low income housing and upgrading programs in Honduras.

The services requested appear to be "right up WASH's alley" and we would greatly appreciate your help in obtaining their participation in this effort. It should be noted that their final product may well have important implications for other programs both in Honduras and throughout the Central American area.

Finally, the time schedule indicated in the telegram (which was delayed in receipt) is no longer practical and we therefore await your suggestions as to when the services could commence.

Attachment: a/s

cc: F. Conway

TO: Messrs. V. Wehman ST/HEA
D. Olinger PE/PER/H
O. Cordon Guatemala

FROM: Mr. David Donaldson

SUBJECT: Terms of Reference for the Honduras Housing Mission.

DATE: April 29, 1982

For your information and background, I am pleased to enclose a description of the services that should be provided by the WASH consultant.

You will note that we propose to have the consultant be briefed and debriefed in Washington in order to have the maximum WASH input. We propose starting date of the mission is no later than 20th of May.

Following numerous conversations with Boyer in Tegucigalpa, we have selected Octavio Cordon of Guatemala as the consultant for this mission. He has indicated his interest and availability for this work.

DD:mh

TERMS OF REFERENCE
FOR HONDURAS HOUSING MISSION

1. Background

The Housing Office of the USAID mission in Honduras, currently has projects in Tegucigalpa and San Pedro de Sula and they would like to use WASH assistance for:

1. developing mechanisms for accelerating the current process of project implementation;
2. reviewing current design standards, specifications and costs of infrastructure systems for low income housing and upgrading programs; and
3. participating in a seminar on appropriate design standards for water and waste disposal in low income shelter projects for Latin America.

2. Proposed Mission

Phase I (2-3 weeks)

The proposed scope of technical services to be carried by qualified civil or sanitary engineer with extensive field experience and spanish capability includes the following:

A. Review of existing design standards and specifications of SANAA and DIMA (Honduras' two water sewarage authorities) and evaluate the consistency of their interpretation and actual application in the planning and approval processes;

B. Evaluate the appropriateness of existing design standards and specifications given typical terrain and soil conditions found in Tegucigalpa and San Pedro Sula. Recommend specific measures that could be taken to reduce project costs and timing in project planning and design stages.

For this phase, RHUDO/ROCAP will set up a coordinating work group to work with the consultant consisting of representatives of appropriate ministries, private construction contractors and consulting engineers.

The consultant will have to travel to Tegucigalpa and San Pedro Sula to meet coordinating work group and to familiarize himself with Honduras' water and sewerage institutions and prevailing design standards, specifications and construction practices. He may return to his place of residence to prepare a preliminary recommendation in the form of a written report in spanish. This will be reviewed by RHUDO/ROCAP and returned to WASH for development of the final report.

Phase II (1 week)

In this phase,the consultant will present his recommendations at the Central American Housing Conference which is to be held in mid July. These recommendations will be approved by WASH prior to their presentation at the conference.

3. Proposed Dates

The following dates are proposed for the mission:

Phase I

Starting date: no later than 20th May. (15th May if possible.

Duration: 2-3 weeks (including briefing and debriefing in WASH).

Phase II

Starting date: about 12th July.

Duration: one to two days in Tegucigalpa, to present a paper and to discuss the recommendations with the Housing Working Group.

Appendix B

Itinerary

May 13 - Guatemala-Washington trip

May 14 - Various meetings with WASH Housing personnel and AID in Washington

May 15 - Return trip: Washington-Guatemala

May 16 - Stopover in Guatemala

May 17 - Guatemala-Tegucigalpa Trip

May 18 - Meeting with the Committee

May 19 - Visit to the Centroamericana Oeste and 3 de Mayo Projects in Tegucigalpa

May 20 - Meeting with the Committee
INVA Engineer interview and later with SANAA Design and Supervision engineers

May 21 - Interview with SANAA engineers
Meeting with AID
Interview with SANAA engineers in charge of regulations

May 22 - Study and Evaluation of Information

May 23 - Sunday

May 24 - Tegucigalpa-San Pedro trip
Meeting with DIMA executives
Visit to the Chamelecon Project

May 25 - Interview with the DIMA engineers in charge of regulations; visit to the Paz Garcia Sur Project
San Pedro-Tegucigalpa trip

May 26 - Interview with executives from the Housing Office/AID
Cost Estimate and Study Projects

May 28 - Visit CMDC personnel; interview with AID personnel

May 29 - Committee Meeting: Describe results and conclusions

May 30 - Tegucigalpa-Guatemala trip

Appendix C

Officials Interviewed

1. National Independent Water and Waste Disposal Service (SANAA)

Tomas R. Lozano, Engineer	-	General Manager
Miguel A. Lagos, Engineer	-	Director of the Operations Division
Tibiurcio Calderon, Engineer	-	General Plan
M. A. Blair, Engineer	-	General Plan
Luis A. Garay, Engineer	-	Director of the Department of Design and Supervision
Miguel A. Flores, Engineer	-	Department of Design and Supervision

2. Municipal Water Division - San Pedro Sula - (DIMA)

Hector Zuniga, Engineer	-	Manager
Gerardo Murillo, Engineer	-	Director, Department of Engineering

3. National Institute for Housing (INVA)

Rene Lorenzana, Engineer	-	Director, Project Division
Pio Rene Suarez, Engineer	-	Director, Department of Design
Alex Quan, Engineer	-	Assistant Director, Department of Design
Oscar Pinto, Engineer	-	Director, Construction & Supervision Department

4. Metropolitan Council of the Central District (CMDC)

Modesto Portillo, Engineer	-	Director, Department of Engineering, for Underdeveloped Neighborhoods
Armando Mendoza	-	Metroplan

5. Other Organizations

Hazel Rodriguez, Engineer	-	FINAVI
M. A. Cuernavaca, Engineer	-	FINAVI, San Pedro Sula
Rene Maradiaga, Engineer	-	BANMA

6. Private Sector

Jesus Simon, Engineer	-	Honduran Construction Chamber
Adan Lopez, Engineer	-	National promoter, South America
Manuel Lopez, Engineer	-	Private Consultant

7. AID Mission/Honduras

Francis Conway	-	Associate Director, Housing Office
Jeffrey Boyer	-	Advisor, Housing Office
Jorge Avalos	-	Advisor, Housing Office
W. H. Smith	-	Engineer for the Mission

8. Construction Personnel and Facilities Supervision

Jose Isasio Pena, Engineer	-	Hato de Enmedio Project, Tegucigalpa
Mario Mass, Engineer	-	Hato de Enmedio Project, Tegucigalpa
Julio Cesar Espinel, Engineer	-	Hato de Enmedio Project, Tegucigalpa
Rodolp Menjivar, Engineer	-	Chamelecon Project, San Pedro Sula
C. Guzman, Engineer	-	Chamelecon Project, San Pedro Sula
Ernesto Soto, Architect	-	Paz Garcia Project, San Pedro Sula
Ronal Yuja, Engineer	-	Paz Garcia Project, San Pedro Sula
Rodrigo Soto, Engineer	-	Paz Garcia Project, San Pedro Sula

9. College of Honduran Civic Engineers (CICA))

Roberto Centeno Ficallos, Engineer	-	Committee Coordinator CICH Representative and Advisor to the SANAA manager

APPENDIX D

Photographs

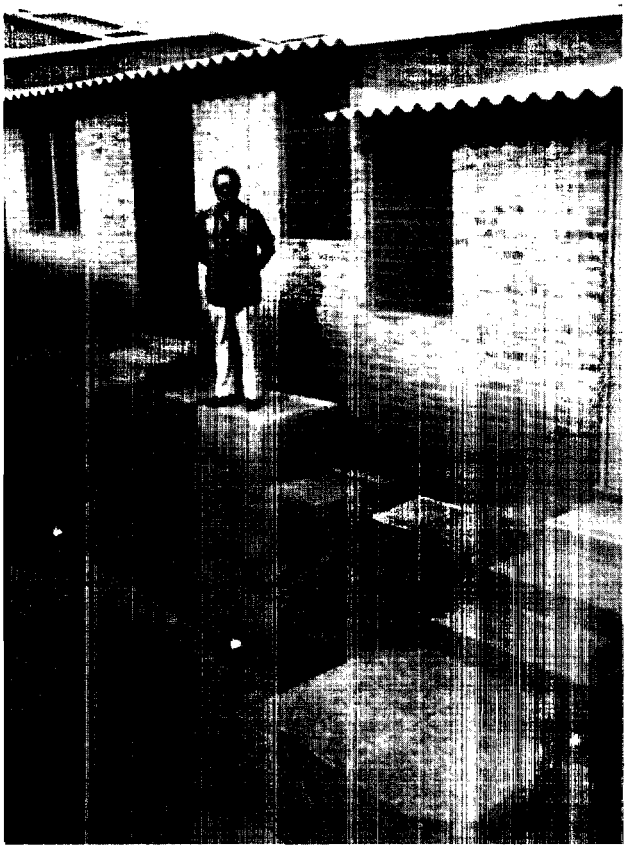

The junction from the Sewage to the Public System.
The tubes which lead into the gutter bring rainwater from the backyards.

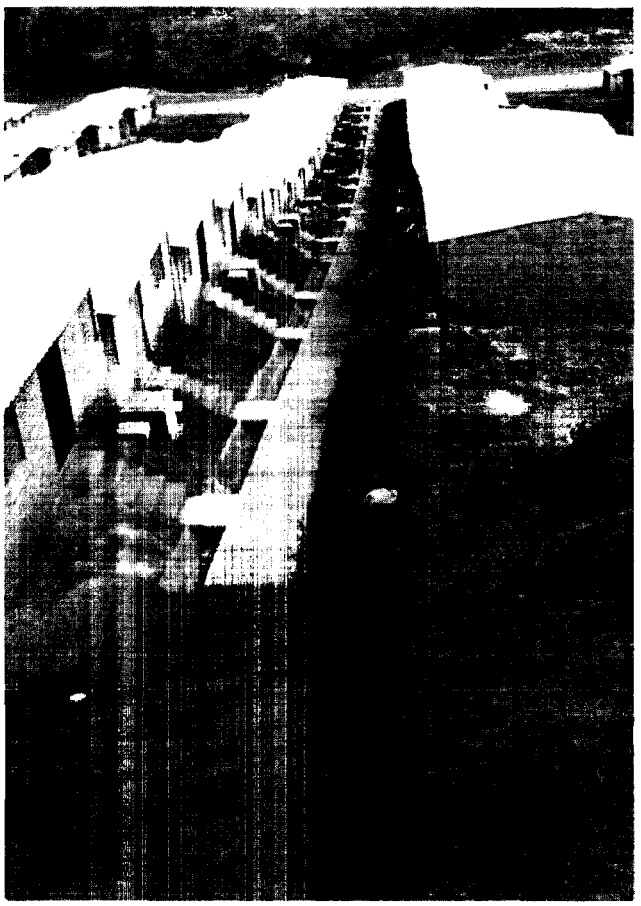

Observe the connection from each house to the public system (water and sewage).

BEST AVAILABLE COPY

The backyards are drained toward the gutter in the sidewalk. The sinks are connected to the sewer system.

The junction to the public system for each house and for each system. The meterbox is scheduled to have a meter installed in the future.

 BEST AVAILABLE COPY

The use of high cost braces could be better substituted by crosses or iron service connections, especially when the system is of tubing 2" in diameter.

Cost/unit (1982 in Guate)

0	brace	Iron
2	5.40	2.84

IQ = 2 Lempiras = 1 US $

The rainwater drainage system of lined gutters is constructed with utmost care and at a low cost.

BEST AVAILABLE COPY

Appendix E

HATO DE ENMEDIO
INVA, TEGUCIGALPA

(Data adjusted by Eng. Pio Suarez)

Percentage of Costs

Sector 2

Percentage of the cost for Housing and Community Infrastructure in Sector 2		
Urbanization	L. 532,255.87	21.90 %
Dwellings (380)	L. 1,898,855.20	78.10 %
TOTAL	L. 2,431,111.10	100.00 %

Percentage of the Cost of the Community Infrastructure Sector 2		
Roadways	L. 96,662.20	18.10 %
Sewage System	L. 130,708.87	24.60 %
Rainwater	L. 60,808.10	11.40 %
Drinking Water	L. 58,400.37	10.90 %
Construction (digging and filling)	L. 95,786.36	18.00 %
Sidewalks	L. 89,889.47	16.90 %
TOTAL	L. 532,255.87	100.00 %

Percentage of the Cost of Housing in Sector 2		
Service Connection for the Sewage system	L. 85,301.79	4.50 %
Service Connection for Drinking Water	L. 66,132.84	3.50 %

Total Cost of Housing

	Lempiras per House	% of the Cost of the House
Cost per House	L. 6,397.66	
Drinking Water	153.69	2.4
Sewage	343.97	5.38
Rainwater	160.02	2.5
Service Connection DW	224.48	3.51
Service Connection S	174.03	2.72

Garcia Paz Sur Satellite City

San Pedro Sula

Information Adjusted by Eng. Rodrigo Soto

Cost of the Drinking Water System		492,499.96
Cost of the Sewage System		619,403.83
Tank, est. pump and manholes		400,000.00
No. House, 2509 of 25 m^2 c/n and 100mt lots.		
Total Cost of Construction		L 4,000.00/house
Cost per house		
Drinking Water	196.29	4.91
Sewer	246.87	6.17
Tank, etc.	159.43	3.99
Cost per		
Fresh Water and Sewage		17.73/m^2 house
		4.43/m^2 lot

CENTRO AMERICA COLONY

SECTOR: WEST

DATE: May 19, 1981

CALCULATIONS: ENG. Osmin Nunez

1840 houses

(Information adjusted by ENG. Adan Lopez)

SUMMARY

		Amount in Liters/Second
I.	Preliminaries	82,000.00
II.	Streets	917,618.00
III.	Lots	1,173,508.00
IV.	Fresh Water	441,129.00
V.	Conduction lines	369,090.00
VI.	Sewage	993,225.00
VII.	Sub-collectors	80,500.00
VIII.	Rainwater	142,930.00
	GRANT TOTAL...	4,200,000.00

Four million two hundred thousand

CENTRO AMERICA OESTE COLONY

(Data Adjusted by Eng. Adan Lopez)

Construction

1.	Land	L. 815,22
2.	Urbanization	2,282.61
3.	Housing	4,030.98
4.	Design	141.00
5.	Administration and Promoter's Fee	390.00
	Cost of the housing	L.7,660.00

Others

	During the first 6 months	After 6 months
Supervision	L. 140.00	L. 330.00
Finance Cost	325.55	325.55
Selling Cost	260.00	260.00
Inflation	0.00	947.04
	L. 725.55	L.1,862.59
Selling Price...	L.8,385.55	L.9,522.59

CENTRO AMERICA OESTE

Cost per house	LEMPIRAS/HOUSE	% Cost of the House
Selling price	8,385.55	109.47
Financial Supervision, Cost of Inflation	725.55	9.47
Cost of Construction	7,660.00	100.
Land	815.22	
House	4,030.98	
Urbanization		
Fresh Water	239.74	3.13
Sewage	539.80	7.05
Rainwater	77.68	1.01
Fresh Water Conveyance	200.59	2.62
Subcollectors	43.75	0.57
Others	1,050.38	13.71
Design	141.00	1.84
Administrator/promoter's share	390.0	5.09

---

(1) Preparation, streets and lots

Metropolitan Town Council of the Central District

Adjusted Data by Engineer Modesto Portillo

List of Estimated Costs

Systems: Supply of Water and Sanitary Sewage

Supply of water per house		L.	403.00
Sanitary sewage per house			716.00
Manhole with metal lid cover			1,016.00
Manhole with concrete lid cover			818.00
Excavation M^3			8.20
			4.45
Unskilled help per day			6.00
Skilled labor per day			8.00
Mason per day			15.00
PVC Tubing m.1.	1/2" Drinking Water		0.78
	3/4"		0.93
	1"		1.20
	1½"		1.98
	2"		2.76
	3"		6.30
	6"		23.00
	8"		37.00
	10"		71.00
PVC Tubing m.1.	Drainage 4"		5.00
	6"		9.00
	8"		15.00
	10"		31.00
Concrete Tubing	6"		6.72
	8"		9.16
	10"		15.46

Taken from the Construction Contract of the Sanitary Sewage and Water supply systems of the "Tres de Mayo" Colony

APPENDIX F

Proposals for Minimum Requirements of the Various Agencies

INVA Proposals
(Information adjusted by Eng. Pio Suarez)

1. Fresh Water:

   Allotment:

   1.1 Allotment for colonies with scarce resources, possibly increasing later: 40 gallons person/day.

2. Design Factors:

   a) Conveyance line: 125 times the allotment.

   b) Amount of small losses: Losses of 10%, perhaps greater.

   C) For the distribution line: 1.2 times the allotment.

3. Pump Stations:

   a) Pump time: 16 hours.

   b) Amount to be raised: half of the daily consumption x 1.5.

4. Fire:

   The water demanded for firefighting will only be considered for cities larger than 10,000 people..
   The system will be balanced by the following amounts:

   a) Maximum hourly consumption.

   b) Coincidental consumption (maximum daily consumption + 100 gal/min.).

   The location of fire hydrants should be within a radius of 100 mt. At least two hydrants will be suggested for critical situations.

5. Minimum Diameter:

   a) 1½" Filler Tubing.
   b) Circuit tubing from 2" to 2½".
   c) A main fresh water supply will serve every two houses and be installed with 3/4" galvanized tubing from which ½" branches will emanate to each of the houses.

6. Tanks:

When Sanaa's general system can't be directly incorporated for reasons of maintaining minimum internal pressure, distribution tanks are constructed according to the following characteristics:

20% of daily consumption + 250 gallons/min., per 2 hours.

7. Value Installation:

a) Valves are only laid in circuit corners. Valves aren't required in every filler tubing corner nor in the intersecting connections they create. It's enough to isolate circuits so that repairs can be made.

b) In tank exits.

c) In tank entrances.

d) In the assemblage point that forms the distribution line and the distribution system.

Sewerage:

1. Minimum Diameter:
   a) Sideboards 6"0. in concrete or P.V.C.
   b) 4"0 Discharge tube for 2 dwellings.

2. Calculation of Resources:
   a) 70% endowment of drinking water
   b) Design factor 4. In sideboards (concrete)
   c) 1.25 integration factor. Only for sideboards
   d) Design factor 2
   e) Rough efficients 0.015 concrete y n=0.009 P.V.C.
      n=0.013 for main 18"0 tubings

3. Actual Minimum Speed 1.5 to 2.00 ft/sec.
   a) In sideboards up to 1 ft/sec is accepted with a minimum declivity of 2.25%
4. Inspection Wells:
   a) Maximum distance between manholes 140 mts.
   b) In streets: minimum padding level = 1.50 mts., over the pipes brim.

   On sidewalks: minimum padding level = 0.75 mts., over the pipe's inner rim.

   c) Maximum level of double-welled manhole, 5.00 of the inner rim
   d) Maximum level of reinforced walls 6.00 mts.
   e) Maximum level of declivity in current manholes is up to 0.90 mts. over the pipe brim.
   f) Manholes aren't filled exteriorly on secondary streets and on sidewalks
   g) Ladders: 3/4" Iron that are 0.24 away from the wall and spaced to 0.30 M

h) Covers: all concrete covers will be re-inforced in both streets and sidewalks.

i) The manhole base in semi-solid soil will be 2 layers of brick lined with 1:6 mortar and over a 0.10 mts sand base. In less stable soil, they'll be constructed of reinforced concrete with No. 0.15 m steel.

j) Measurements in meters. Minimum width of operation within a manhole 1.20 mts.

k) The manhole will be considered the "heart" of the piping system and will serve as a conductor for water flow.

5. Meter Box

a) One meter box per 2 houses

b) Average filler level from within

c) Minimum measurements, in meters:

0.60 X 0.60 - to a depth of 0.80 M.
0.80 X 0.80 - to a depth of 1.20 M.
1.00 X 1.00 - to a depth of 1.20 M.

d) The direction change wil be located in the center of the box.

e) Residential discharge tubing should have a horizontal incline of 30" to 45" (maximum).

Rainwater

1. Inspection Wells
   Their characteristics are the same as sewage manholes

2. Sewer Inlets
   a) Interior dubbing and burnishing
   b) Minimum measurements 1.20 + 0.80 mts.
   c) Descending: 5 cm.
   d) 2 Iron lids 1/4

3. Minimum diameters
   a) From sewer inlet to manhole 10"0
   b) From one inspection well to another, calculations are determined by the rate of output to dislodging, no less than 10"0

4. Rate of Tubing
   a) Minimum velocity: 3 ft/sec
   b) Maximum velocity: 15 ft/sec.

5. Rate of Open Pass
   a) Rate is contingent upon the type of base (i.e., Is the base lined?)
   b) Contingent upon lining
   c) Minimum 2 ft/sec.
   d) Maximum 40 ft/sec.

Proposals by

National South American Promoters

(Information adjusted by Eng. Adan Lopez)

1. Accept in part design changes in "Shop Drawings". Conform to aspects 1, 6, 8, 10 as the project is being performed on the spot. As in studies, design and construction are performed simultaneously.

2. Lenient preferential application standards specify social projection projects.

3. The application of requirements and standards should be flexible, catering to actual needs instead of trying to satisfy rigid standards which are often inappropriate for the situation.

4. Accept project expansion, for better coverage with less urbanization, lower infrastructure costs.

5. More amplitude in standard established positions in accordance with the popular model (not lavish), and more tolerant of urban development in:

   I. Drinking Water

      a. Supplies of up to 30 gallons per person per day. Consistent supply with a small house without a garage and only one bathroom, with 6 people and otherwise consistent with minimum consumption of 20 basic m^3 establishes SANAA's rate.

      b. 2" (inches) as the minimum diameter in Hardy Cross's analysis circuits.

      c. Classes RD-26 and RD 32.5 in accordance with the present working pressure where they are adapted, instead of lower RDs than what is required, that is normally demanded.

      d. 1" and 1½" of diameter in filler tubing in small sections or in those of low demand without possible expansion.

      e. Locally manufactured hydrants in a zone of 150 meters, of a strong construction material and the minimum strength necessary for its protection.

      f. Daily variation coefficient K1=1.2 and K2=1.5 independently used for designing distinct parts of the system. A figure consistent with the investigations conducted by SANAA, in lieu of greater theoretic values that normally exist. K1 is consistent with the moderate climate changes in Tegucigalpa (approximate 15°), and K2 is reasonable for the magnitude of the population (approximately 12,000 inhabitants)

g. Control by large sector, by circuits. They are consistent with the operation facility, minimum consumer requirement and the practices of SANAA. A large number of valves escape control and seasonable maintenance.

h. Multiple connections, if the economy requires it.

i. Range of pressure from 5 to 65 meters.

j. Connection without a case for measurement. The type of subscriber, minimum consumption or restricted, he does not pay SANAA, the contention of providing him a measurement reading from the flow-meter. An apportioned rate for those subscribers in populous sectors would probably be better.

II. Sanitary Sewerage

a. 1.8 leakage coefficient in the main sewage channel. Due to the strong declivity, the rapid evacuation of rainwater, on one hand, the rocky material (little leakage) and the proposed PVC material assure small incidence of leakage.

b. 6" of minimum diameter for the outboard improves the hydraulic intake condition. It has sufficient capacity for local assessment, it's accessible for maintenance and the Manning "N" coefficient inferior for the proposed PVC tube.

c. 4" diameter for connection. Maintenance is not a problem, and it has the disproportionately broad capacity for two or more houses, with well-founded declivities.

d. Cases and manholes in the suitably used system, without exterior plaster.

e. Minimum depth of 1.0 meters in vehicular streets. The rocky material and narrow ditch digging (D + 10 cm) assure low transmission charge to the piping.

f. Minimum depth of 0.7 meters in pedestrian streets. This depth is usual for sidewalks in each real connection and does not present problems since the walkways are for pedestrians.

g. Range of speed from 6.0 to 0.5 meters per second.

h. Double manhole.

United Executive Program for

Improving Underdeveloped Neighborhoods

CMDC Tegucigalpa

(Verbal information adjusted by Engineer Modesto Potillo)

Sewage

- reduce minimum diameter from 8" to 6"
- increase minimum depth in pedestrian streets
- accept the use of concrete manhole covers where there is no vehicular traffic
- accept the reduction in material selected from 0.15 m to 0.10 m underneath the piping
- change the plaster specification with select material over the pipe to a screening material
- accept double domiciliary connections
- reduce connection from 6" to 4"
- reduce anchorage charges for underground tubing

Drinking Water

- accept open systems
- reduce number of valves
- reduce hydrants (fire hydrant valves)
- accept higher pressures of 50 mts. in zones where topography is broken
- reduce anchorage charges for underground tubing
- lower supplies to 40 GCD (151.4 litres/habilitation per day)
- fluctuate minimum pressure from 10 mts in places where it is difficult to obtain it

Appendix G

Study of Changes in the Present Regulations

This appendix presents some studies about various aspects of the current regulations in order to show how they affect a project's cost. It hopes to suggest a guideline for including these cost considerations in the code.

These studies should be carried out by the group drafting the code to justify adopting the rules. Similarly, these studies would give the city-planner a clearer focus of the issues when they seek an exception from the rules.

The studies presented are:

1. The cost of external braces on inspection wells.
2. Internal chute of inspection wells.
3. Minimum diameter for the intake of the fresh water system.
4. Changes in distribution costs from varying tube diameters.
5. Minimum diameter in the Primary Discharge Tubes for the sewage system.
6. Minimum depth for the placement of piping
7. Minimum diameter for the intrahouse sewerage and its connection to the system.

This appendix is organized for the purpose of providing a summary of this report to be presented before the ninth COPD/VU Conference.

Direct costs are cited in this appendix. They are those prices in effect in Guatemala City at the time of this report and are given in Quetzales (Q1 = US $1 = L.0.50).

The Cost of External Plaster on Inspection Wells

1.1 Objective

To study how the requirement to plaster the inspection wells affects costs and to examine the possibility of eliminating the external plaster.

1.2 Conditions Assumed

An inspection well 2.75 m deep, constructed of brick according to a plan characteristic of a project presently under construction.

1.3 Reduction in the Thickness of the Plaster

The plan indicates that the plaster should be about 5 cm thick. It was considered worthwhile to study the effect of reducing the thickness to 1.5 cm. The result was that with reasonably skilled workmanship practically the same degree of watertightness is achieved.

1.4 Removal of the Exterior Plaster

The plan indicates that the inspection well should be plastered both exteriorly and interiorly with a 5 cm mantle. This exterior plaster was omitted when determining the cost of the well. Undoubtedly, the exterior plaster was included to reduce the amount of seepage. Nonetheless, the outside plaster does not appear to be necessary so long as the wells are above the groundwater levels and the ground is clay. In addition, the inside plaster was reduced to a thickness of 1.5 cm.

In this particular case it is important to note that if the exterior plaster is not required it is possible to reduce the dimension and volume of the excavation for each well. This prospect yields additional advantages by causing fewer disturbances to the work area and fewer possibilities for problems to arise from interference of the plaster with other systems such as fresh water and storm drainage.

1.5 Costs

The cost of the three alternatives analyzed were determined and are presented in table 1-2 enclosed.

1.6 Conclusions

- Reduction of the thickness of the plaster, Case 2, reduces the cost of each inspection well by 15% while it does not entail any reduction in functional quality of the well.

- The removal of the exterior plaster, Case 3, has been determined to have no unfavorable effect on the functioning of the waste disposal and drainage systems since these wells are usually above the ground water level. Since the thickness of the interior plaster is also being reduced, the cost of the well drops to about 64% of the original price. Twenty-five percent of this price reduction is due to the removal of the external plaster.

TYPICAL INSPECIAL WELL

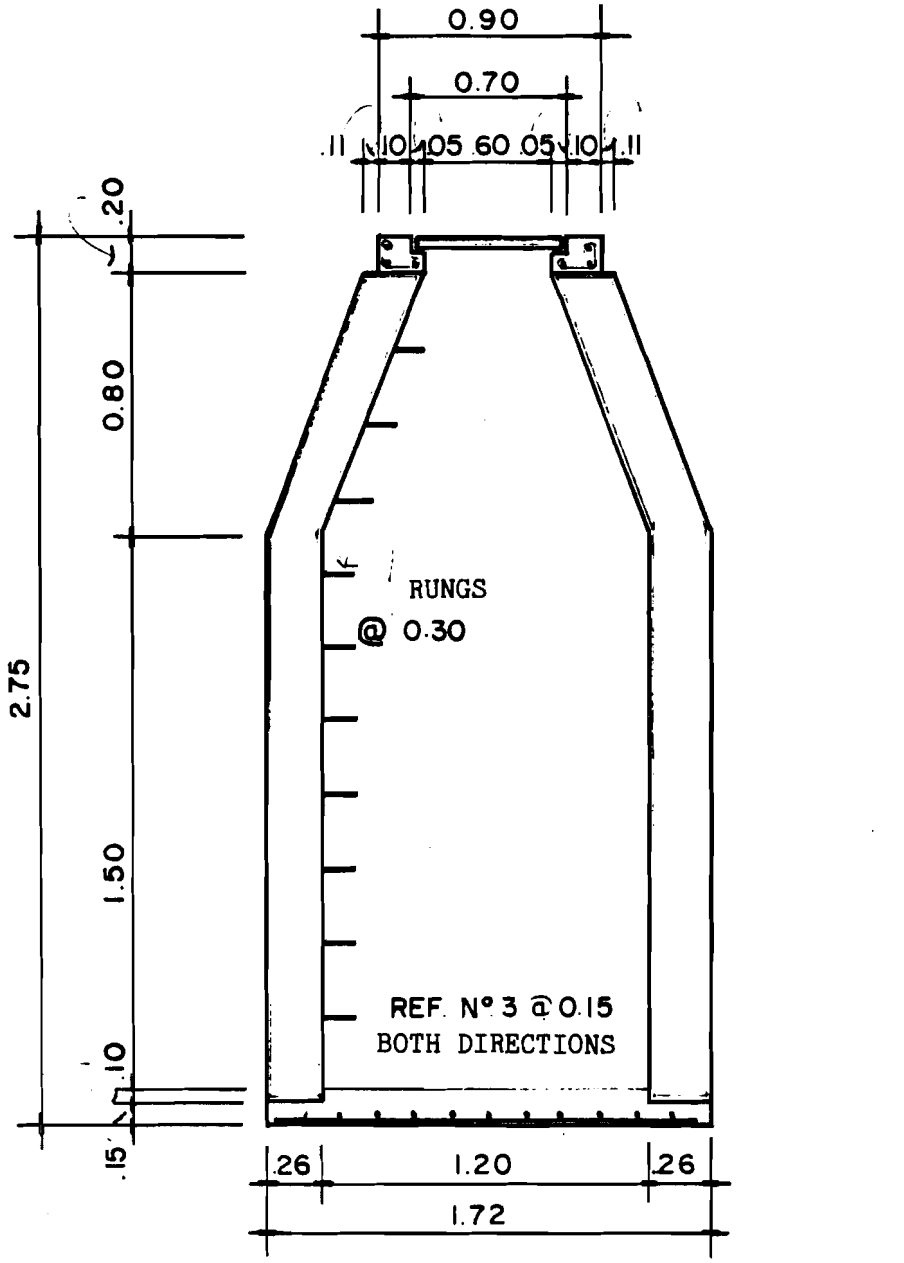

Cover Detail

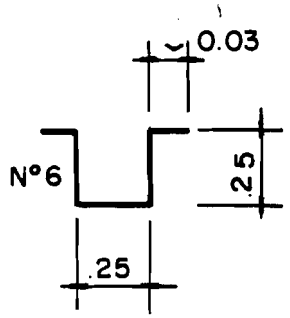

RUNG DETAIL

Table 1-1

Estimated Costs of an Inspection Well

Item	Unit	Unit Price	Case 1 Taken from a project presently under construction		Case 2 Same as Case 1 except the plaster is reduced to 1.5 cm		Case 3 Same as Case 2 but without the external plaster	
Excavation	m^3	2.00	13.72	27.44	13.72	27.44	6.39	12.78
Filler	m^3	4.00	8.23	32.92	8.23	32.92	0.90	3.60
Brick Wall	m^2	7.87	14.95	117.66	14.95	117.66	14.95	117.66
Plaster, Int. Cylinder	m^2	3.85	6.03	23.22	6.38	10.72	6.38	10.72
Plaster, Int. Cone	m^2	5.27	5.23	27.56	5.57	18.55	5.57	18.55
Plaster, Ext. Cylinder	m^2	3.85	8.65	33.30	8.29	13.93	0.00	0.00
Plaster, Ext. Cone	m^2	5.27	10.41	54.86	10.18	33.90	0.00	0.00
Concrete Lid	m^3	90.00	0.10	9.00	0.10	9.00	0.10	9.00
Concrete Base	m^3	90.00	0.46	41.40	0.46	41.40	0.46	41.40
Steel Lid Reinforcing	kg	0.66	49.73	32.82	49.73	32.82	49.73	32.82
Steel Base Reinforcing	kg	0.66	24.08	15.89	24.08	15.89	24.08	15.89
Steel Rung Reinforcing	kg	0.66	14.48	9.56	14.48	9.56	14.48	9.56
Total Cost				425.63		363.79		271.98
Percentage				100		85.5	63.9	

Internal Chute in Inspection Wells

2.1 Objective

To study the implied costs of the regulations which requires that "when (in inspection wells) the chute is more than 0.60 m an external pipe should be installed..." This section proposes an alternate solution which meets the requirements at a lower cost.

2.2 Conditions Assumed

An inspection well with a one meter, all concrete exterior chute, according to the specifications of the attached figure.

2.3 Alternative

A six inch PVC tube, fixed with braces on the inside of the well is proposed as a way of reducing costs while retaining the usefulness of achieving the appropriate slope according to the regulations. In order to determine the economic advantages of such a system, the cost of constructing an inspection well according to this design were calculated.

2.4 Costs

Table 2-1 attached presents the costs of the options considered.

2.5 Conclusions

Even without taking into account advantages such as simplicity of construction and maintenance which this alternative plan presents, one can appreciate that the savings from this change in design alone are considerable.

Table 2-1

Estimated Cost of Alternatives

External Chute	Unit	Unit Cost	Quantity	Cost	
Excavation	m^3	2.00	0.29	0.58	
Fill	m^3	4.00	0.00	0.00	
Concrete	m^3	180.00	0.24	43.20	
Steel Reinforcing	kg	0.66	0.90	0.59	
			Total...	44.37	100%

Interior Chute PVC Tube	Unit	Unit Cost	Quantity	Cost	
6" PVC Tubing	ml	8.82	1.00	8.82	
Braces, Installed	u	3.00	2.00	6.00	
			Total...	14.82	33.4%

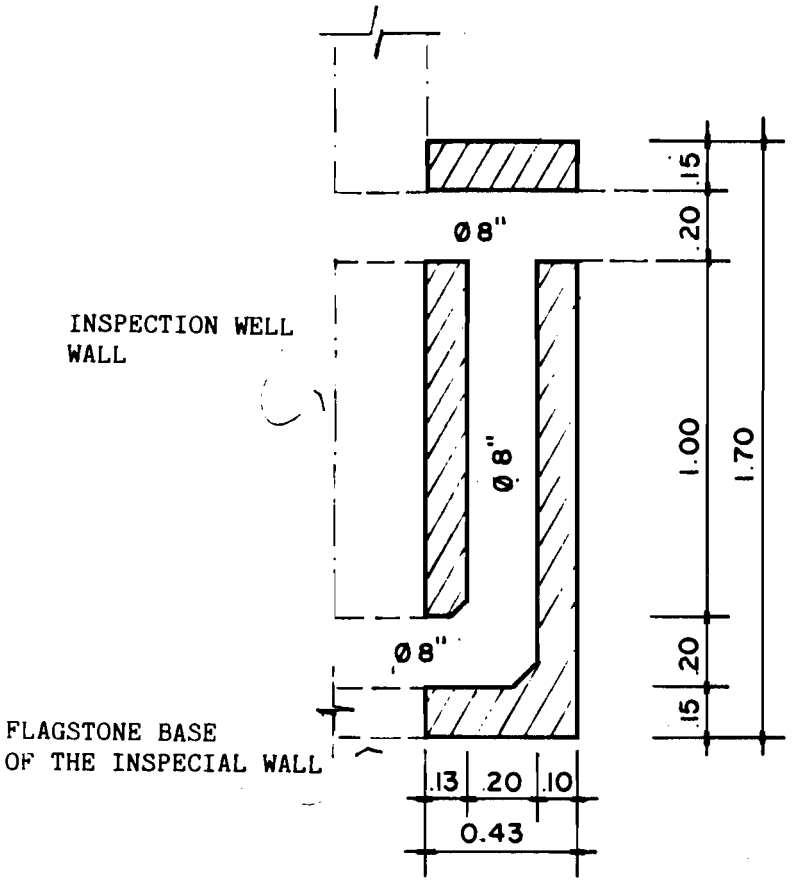

EXTERIOR CHUTE ENCLOSURE

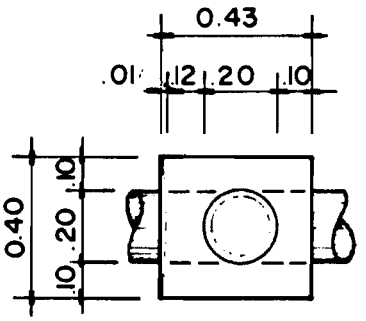

BASE

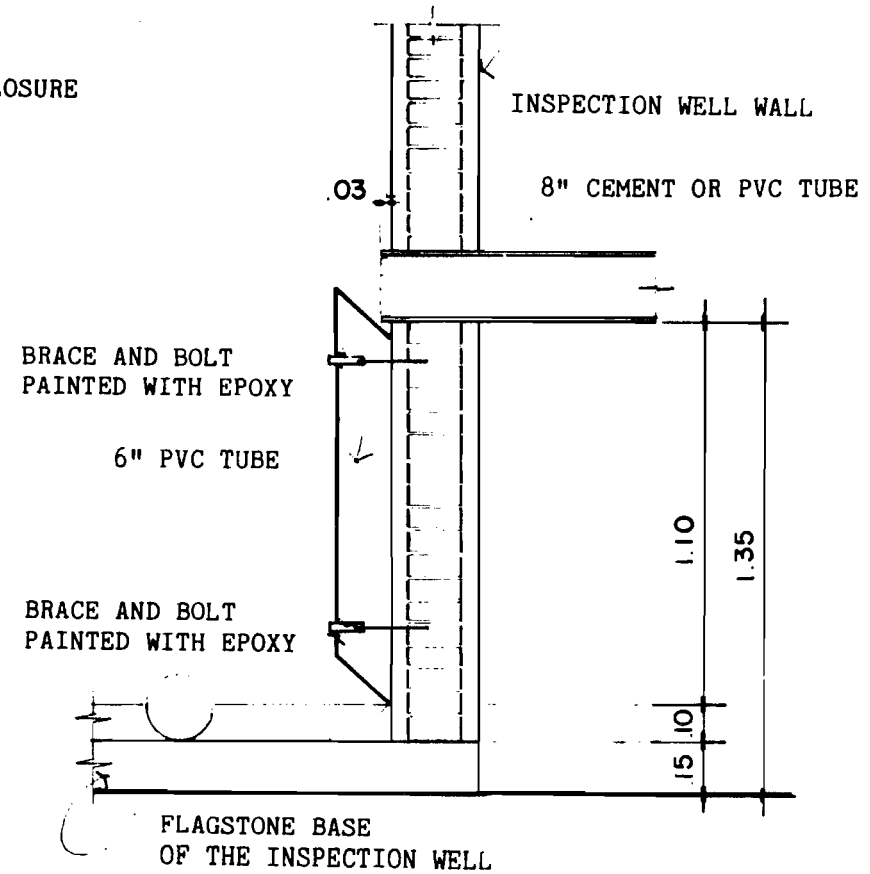

INTERNAL CHUTE

Minimum Diameter for the Intake Fresh Water Systems

3.1 Objective

To demonstrate the minimum allowable tube diameter in the intake of a fresh water distribution system.

3.2 Conditions Assumed

A 100 m long block with 12 to 15 houses facing the street on both sides. In other words, a total of 24 to 30 ½" service connections directed from the central pipe which is supplied at only one end.

The houses are assumed to be low income units with sanitation facilities composed of a toilet, a shower, and a sink for washing clothes and dishes. The sink has a single, ½ inch spigot.

3.3 Demand According to Hunter's Method*

Each house will have	Hunter's Units
1 toilet	3 units
1 shower	2 units
1 sink	3 units
Total...	8 units

One would have from 192 to 240 units per block or a demand of 4.04 liters/sec. to 4.59 liters/sec.

Using PVC tubing and accepting a velocity of from 2.0 to 2.25 m/sec, this level of demand requires a two inch diameter which, considering a coefficient of 140 (Hazen-Williams), requires hydraulic gradients of 8.1 to 10 percent.

Using a 1½" diameter tube, the smallest commercial diameter, would give a velocity of 3.5 to 4 meters/sec. - considered very high for a distribution network.

3.3.1 With an Additional Spigot

If one considers that when installing a fresh water system it is usual to install a hose, peak demand automatically increases by 3 units for a total of 11 units per house.

---

*Hunter's Method assigns units to determine the probability of the simultaneous use of various devices and with this use, the probable amount of demand (Ref. 1). This method is used by almost all of the Plumber's Codes on this continent (Ref.s 2 and 3).

Thus, there is from 264 to 330 units or 4.86 to 5.73 liters/second of peak demand per block. This rate of flow requires a minimum tube of 2" in diameter although the velocity is a bit high (i.e., from 2.4 m/sec. to 2.82 m/sec.)

3.4 Loss of Pressure

With a ½" service connection 15 m long (including equally long attachments), but without considering pressure lost by the water meter (which we assume does not occur) there would be the following loss of pressure:

For 11 units:
- Q = 0.6 liters/sec. from where
- S = 60% and h = 15 X 0.6 = 9.0 mts

Assuming a uniform distribution of the connections along the length of the street, the loss of pressure in the 2 inch PVC central tube will be:

- Q = 5.7 lts/sec. at the beginning to 0.6 lt/sec at the end
- S = 16% to 0.2%
- loss of pressure on the block h = 1/3 (100 X 0.6) = 5.3 mts

Consequently the loss of pressure in the main passage and the most distant connection will be 975.33 = 14.3 mts.

Since a column of water requires a minimum pressure of 3 mts (4 psi) for the operation of toilets and showers, the minimum pressure present at the beginning of the block's main passage should be an 18 mts column of water plus the difference in the level of the highest point receiving the service.

The same analysis with a central tube of 1½" gives a loss of:

S = 60%
h = 1/3 (100 X 0.6) = 20.00 mts.

and a total of 29.00 mts which requires pressure of more than 30 mts plus the difference in level of the service point.

3.5 Demand According to a Reduced Hunter's Method

The values obtained by Hunter's method:

o Accepting only the demand figures in 60% of the cases would give the following loss of pressure with the ½" service connection already described, and a 2" PVC central tube.

- Service connection: 11 units and ½" connection
  Q = 0.6 X Q Hunter = 0.6 X 0.6 = 0.36 lt/sec.
  S = 25% and h = 15 X 0.25 = 3.75 mts

- 2 inch central tubing:
  Q = 0.6 X 5.7 = 3.42 lt/sec. to 0.36 lt/sec.
  S = 6% to 0.1%

- Loss of pressure inthe block h = 1/3 (100 X 6%) = 2.00 mts

- This then requires a minimum pressure of
  Pmin = 3.75 + 2.00 + 3.00 = 8.75 mts. at the beginning of the block.

3.6 Demand According to Consumption Through the Service Connections

The volume or flow for each house is determined by the diameter of the service connection. A ½" PVC connection will give a maximum flow rate within the following values:

with V = 3 m/sec.: Q = 0.61 H./sec. and S = 70%
with V = 2 m/sec.: Q = 0.41 H./sec. and S = 33%
with V = 1 m/sec.: Q = 0.20 H./sec. and S = 8%

Following the description of the house and assuming that there well be 15 m of tube from the central system to the spigot, a peak flow of 0.4 liters/sec. is expected.

The maximum rate of flow for the tube will depend on the number of connections used at a time on the block studied. Estimating on the basis of thirty houses gives:

with 100% - 30 X 0.4 X 1 = 12.0 H./sec.
with 75% - 30 X 0.4 X 0.75 = 9.0 H./sec.
with 50% - 30 X 0.4 x 0.50 = 6.0 H./sec.
with 40% - 30 X 0.4 X 0.4 = 4.8 H./sec.
with 30% - 30 X 0.4 X 0.3 = 3.6 H./sec.

Given that the spigot is capable of producing a flow rate of from 0.3 to 0.4 liters/sec., that water can flow from other areas in the house, and that it is very likely that a large number of households will wash clothes or cook at the same time, a demand level of some 40 to 50 percent (4.8 to 6.0 liters/sec.) can be expected with some frequency. This level coincides with the values obtained by Hunter's method in 3.3 and therefore the considerations concerning tube diameter and water pressure are the same.

3.7 Demand According to Average Consumption and Variable Factors Mentioned in the Regulations

Using the rate of consumption indicated by the Honduran regulations for this type of housing, 6 g..h.d. (277 lit./inhab./day), and assuming a density of 5.5 people/house, there is an average annual rate of consumption for the thirty houses on the block of:

Qave = 60 X 30 X 55 = 9900 g.p.d. = 6.875 g.p.m.
Qave = 0.434 liters/sec.

If one applies the factor of 2.5 indicated by the regulations to this value, there would be a maximum average hourly rate of consumption of:

Q hour maximum = 1,085 liters/sec.

This amount is considerably less than the consumption levels determined in the previous analyses and is attributed to the following:

a) The maximum hour factor is determined from studies of large areas, often with thousands of inhabitants, and therefore is not applicable to a very small sector. In a central tube supplied at only one point, the peak demand is proportionally much greater than the demand in a city or, at least, a neighborhood.

b) The maximum hour factor used appears small if one is assuming a per capita daily consumption on the low side since peak demand is a function of the number of units that use water.

3.8 Conclusions

- When using tubing for an intake system even in low cost housing, it is necessary to use a central tube with a minimum diameter of two inches in order not to exceed the recommended velocities, lose pressure (other than that due to the topography) and reduce the risks of negative pressure which form at some ends during periods of high demand.

- The design of a pipeline on the basis of the general guidelines of per capita consumption and daily and hourly fluctuations commonly used in the regulations are inadequate to satisfy the demand which consumers can put on the system.

3.9 References

1. Manas, Vincent T. National Plumbing Code handbook. Standards and Design Information. McGraw Hill 1957.

2. Uniform Plumbing Code. International Association of Plumbing and Mechanical Officials. 1976.

3. Normas Sanitarias para Proyecto, Construccion, Reparacion y Reforma de Edificios. Gaceta oficial de la Republica de Venezuela, 16 Feb. 1962.

Changing the Distribution Costs by Changing Diameters

4.1 Objective

To study the impact of varying the minimum diameters in fresh water distribution systems by comparing various solutions.

4.2 Conditions Assumed

The hydraulic calculations and the basic conditions assumed (presented in detail in Case 3) indicate that one could use 1½ inch PVC tubes if one accepts that during periods of maximum demand, the water velocity will exceed the level recommended for this material. Also, there must be enough pressure at the beginning of the passages to compensate for the loss of pressure due to friction in the tube, without losing pressure in the service connection furthest from the source.

4.3 Alternatives Examined

Since the reasons for reducing the diameter to 1½ inches is to cut costs it was considered advantageous to estimate the cost of installation for one block using tube from 1½ to 2 inches in diameter, having assumed that the above hydraulic problems don't exist.

Given that this report is dealing with low cost urbanization, it was also considered propitious to make the preceding calculations, comparing the traditional system of ½" service connections from the central tube to each house, with the alternative of using a single ½" tube to make the connection. This tube would run through the street and divide under the sidewalk toward two houses.

4.4. Costs

Table 4.1 attached presents the estimates of direct costs for the four alternatives studied

1) 1½" Central tubing with simple service connection
2) 2" Central tubing with simple service connection
3) 1½" Central tubing with double service connection
4) 2" Central tubing with double service connection

4.5 Cost Comparison

One can see that by reducing the central tubing from 2" to 1½" there is an 8% savings obtained by using a simple service connection and a 9% savings using a double service connection.

Additionally, when choosing between a single service connection and a double service connection, one obtains a savings of 18% if it is a 2" central tube and 20% if it is a 1½" central tube.

4.6 Conclusions

- The reduction in cost realized by using a 1½" tube in place of a 2" tube is very small and it is difficult to overcome the hydraulic problems arising from the use of the smaller tube.

- The use of a double service connection, which means a savings of 18%, can also represent an effective limit on the peak demand from the house and, consequently, on the system, but without the risk of producing low pressure in the central tubes.

Table 4-1

COST ESTIMATE* OF THE DISTRIBUTION NETWORK, MINIMUM DIAMETERS

			Single Service Connection				Double Service Connection			
			½" Tube		2" Tube		1½" Tube		2" Tube	
	u.	U.C.	Quantity	Cost	Quantity	Cost	Quantity	Cost	Quantity	Cost
Ditching	m^3	2.00	45	90.00	45	90.00	45	90.00	45	90.00
Filler	m^3	4.00	45	180.00	45	180.00	45	180.00	45	180.00
1½" SDR 26, PVC Tubing										
2" SDR 26, PVC Tubing	m	1.24	100	124.00	-	-	100	124.00	-	-
1½" T-joint	m	1.92	-	-	100	192.00	-	-	100	192.00
2" T-joint	u	2.40	20	48.00	-	-	10	24.00	-	-
1½" Bronze Valve	u	2.84	-	-	20	56.80	-	-	10	28.40
2" Bronze Valve	u	18.00	1	18.00	-	-	1	18.00	-	-
Male Adaptor	u	22.00	-	-	1	22.00	-	-	1	22.00
Valve Box	u	1.35	2	2.70	2	2.70	2	2.70	2	2.70
1½" Tube Installation	u	70.00	1	70.00	1	70.00	1	70.00	1	70.00
2" Tube Installation	m	0.20	100	20.00	-	-	100	20.00	-	- -
Tube Probe	m	0.25	-	-	100	25.00	-	-	100	25.00
Ditching Service Connection	m	0.10	100	10.00	100	10.00	100	10.00	100	10.00
Filler Service Connection	m^3	2.00	40.50	81.00	40.50	81.00	21	42.00	21	42.00
½" PVC Tube	m^3	4.00	40.50	162.00	40.50	162.00	21	84.00	21	84.00
½" Elbow Joint	m	0.44	100	44.00	100	44.00	60	26.40	60	26.40
½" T-joint	u	0.29	40	11.60	40	11.60	30	8.70	30	8.70
Simple Service Installation	u	5.00	20	100.00	20	100.00	-	-	-	-
Double Service Installation	u	7.00	-	-	-	-	10	70.00	10	70.00
TOTAL				961.30		1,047.10		773.30		854.70
Percentage (2)				92%		100%		74%		82%
Percentage (3)				112%		123%		91%		100%

A block 100m long between corners, 9m wide, 20 service connections.
Direct costs (in US $) common in Guatemala City in 1982.

Minimum Diameter in the Primary Discharge Tubes for Sewage Systems

5.1 Objective

To examine the minimum tube diameter for sewer pipes where the system begins.

5.2 Conditions Assumed

One should assume the same type of block as was considered under the fresh water system, i.e., 100 m long with 12 to 15 houses on each side for a total of 29 to 30 service connections to the central drain. These assumptions are used so that the values arrived at for the fresh water system will be compatable with those obtained for the sewage system.

The house will be a low cost unit with a bathroom that includes a toilet, a shower, and sink; three connections in all, that discharge into the waste disposal system.

5.3 Demand According to Hunter's Method*

Using the standards of the National Plumbing Code as a guide for the total number of units for the discharge of sewage:

1 toilet	4 units
1 shower	2 units
1 sink	2 units
	8 units

A two inch tube with a one degree gradient would be sufficient for the number of units above. However, with a toilet the minimum tube diameter for sewage should be three inches and preferably four, to avoid obstructions. The above shows that if the connection from the toilet to the gutter is 4" there will be plenty of capacity for the house's sewage.

5.4 Requirements for the Tube in the Street

If there is a maximum of 30 connections and each one contributes a discharge of 6 units there will be a total of 180 units of outflow.

A four inch tube of two degrees gradient would suffice for this amount, permitting up to 216 units according to table 4-3 of the Uniform Plumbing Code (Ref. 2), or a maximum of 172 units if installed with a one degree gradient.

In order that the central tubing installed in the street is larger than the refuse it receives from the house, and thereby reduce the risk of clogging, it is desirable to use a tube of at least 6" diameter.

---

*See Explanation in Case 3

5.5 Hydraulic Analysis

According to the demand estimated above, the maximum amount of water passing through the system at any one time will be about 4.6 liters/sec. Of this, it is expected that the most frequent level of demand will be on the order to 2.3 liters/sec. This rate of consumption fills a 6" tube to 25.5% of its diameter and an 8" tube to 18.8% at gradients of 1%. For a six inch tube the water velocity would be 0-.62 m/sec. and for an 8" tube 0.58 m/sec. This shows a slightly greater velocity from using a 6" tube which also tends to reduce the possibility that material will collect in the tube.

The 6" tube with an average rate of consumption of only 0.44 liters/sec. and a 1% gradient fills to 12% of its diameter and an 8" tube only 8.5%. Velocities for the 6" tube are 35 mts/sec and 0.30 m/sec. for the 8" tube.

The maximum consumption level for the lead pipe would be at the peak consumption level, with maximum seepage. The capacity of the 6" tube with n = 0.13 (Manning) and 1% gradient is about 15 liters/sec. If this value is used to figure the peak rate of flow for sewage, a value of 4.6 liters/sec. results. Thus, there is still an available capacity of 10 liters/sec.; much greater than the recommended flow levels of 2 to 5 liters/sec. per kilometer, which, in the case of 100 m, would be approximately 0.5 liters/sec.

5.6 Conclusion

- A minimum tube diameter of 6" for the primary discharge tube has the hydraulic capacity to carry the sewage for the housing units and any runoff.

5.7 References

1. Manas, Vincent T. National Plumbing Code Handbook. Standards and Design Information. McGraw Hill 1957.

2. Uniform Building Code. International Association of Plumbing and Mechanics. Off's. 1976.

Minimum Depth for the Placement of Tubing

6.1 Objective

To determine the minimum depth of the ditch under the weight of traffic, for the small tubing used in fresh water and sewer systems.

6.2 Conditions Assumed

The decisions presented were made under ideal weather conditions for tropical latitudes. They don't take into account problems such as ground freeze or a shallow ground water level.

6.3 Procedure

The procedure used was based on the well known methods of Marston's theory for the evaluation of a load over tubing and Sprangler's research for the determination of the resistance or load capacity of the tubing.

6.4 Alternatives Studied

6.4.1 PVC Sewer Tube

A 6" diameter PVC (flexible tubing) tube was analyzed. It was installed in 0.80 m wide ditch subjected to the pressure of an H 20-44 truck. Also, the effects of different types of soils were examined:

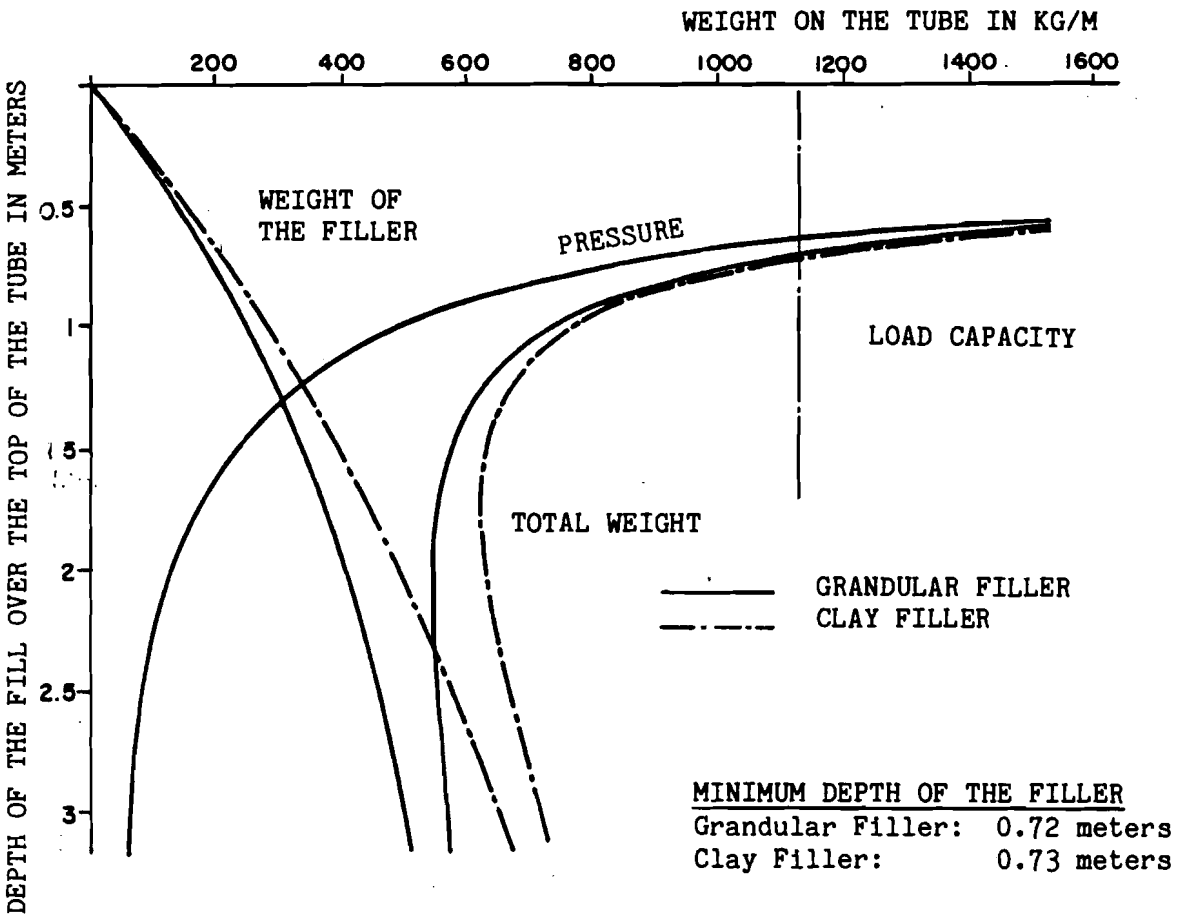

Conclusions

a) The minimum height of the fill above the top of the tube is 0.72 meters for a gradulars filler and 0.73 meters for a clay fillers.

b) An increase in the height of the fill represents a rise in the cost of excavation and filling the ditch.

c) The type of soil used to fill the ditch affects the load through the weight of the fill over the tube, even when one deals with two soils using the same unit of measure.

d) The increase in the weight of the fill declines with the depth because of the friction between the fill and the walls of the ditch.

6.4.2 PVC tube for fresh water

The change in the pressure from changes in the height of the fill above (1½ and 3 inch diameters) PVC tubing was evaluated, using a test load of a $20-44 truck. The tube was installed in ditches 0.45 meters wide, using a granular fill.

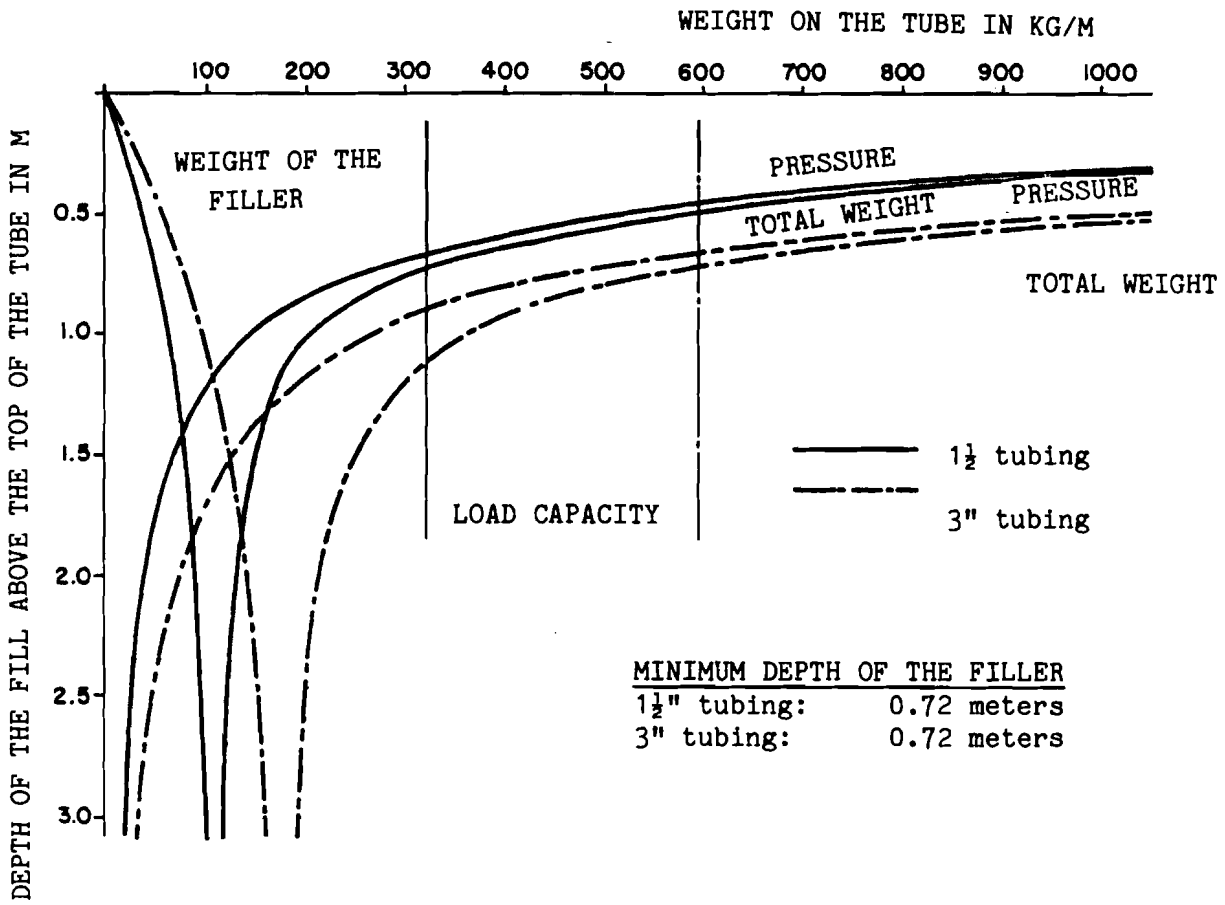

Conclusions

a) The height of the fill above the top of the tub is practically the same for the two tubes analyzed, 0.72 meters.

b) The rise recorded in the weight of the fill falls with the increase in depth due to the friction between the fill and the walls of the ditch.

c) Observe that for filler levels higher than 2.5 m, the weight effect of the filler is decreasing.

6.4.3. Concrete Tube for Sewage

The change in the flow level from changes in the height of fill over concrete tubing (rigid tubing) was evaluated. the tube was subjected to a load of a H 20-44 truck, installed with ordinary bedding (Class C). Six and 8 inch diameter tubing is analyzed, installed in ditches 0.80 and 0.85 meters wide, respectively.

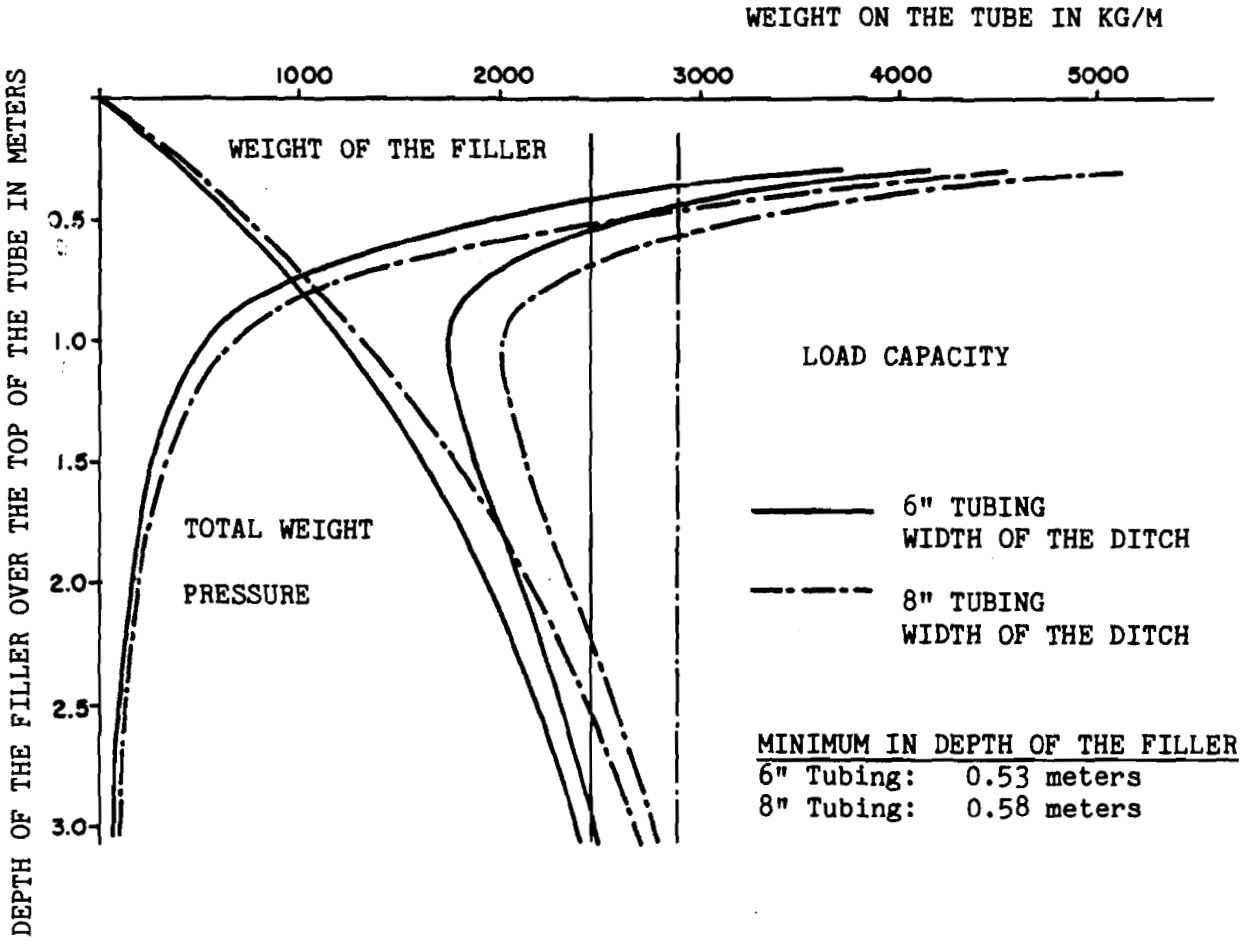

Conclusion

a) The minimum height for the fill above the top of the tube is 0.53 meters for 6 inch tubing and 0.58 meters of 8 inch tubing.

b) There is a point where the combined effect of the weight of the fill and the pressure is a minimum.

c) Observe that with 3 or more meters of fill above the top of the 6" tubing the load capacity of the tube is exceeded.

6.4.4 Concrete Tube for the Sewer-with Special Filler

A six inch diameter concrete (inflexible) tube is analyzed, subjected to a load of an H 20-44 truck. The tubing was installed in a ditch 0.80 m wide. Also, the effects of using the two different types of soil as filler were evaluated. The effects changing the type of padding has on the minimum height of filler necessary over the tubing was also evaluated.

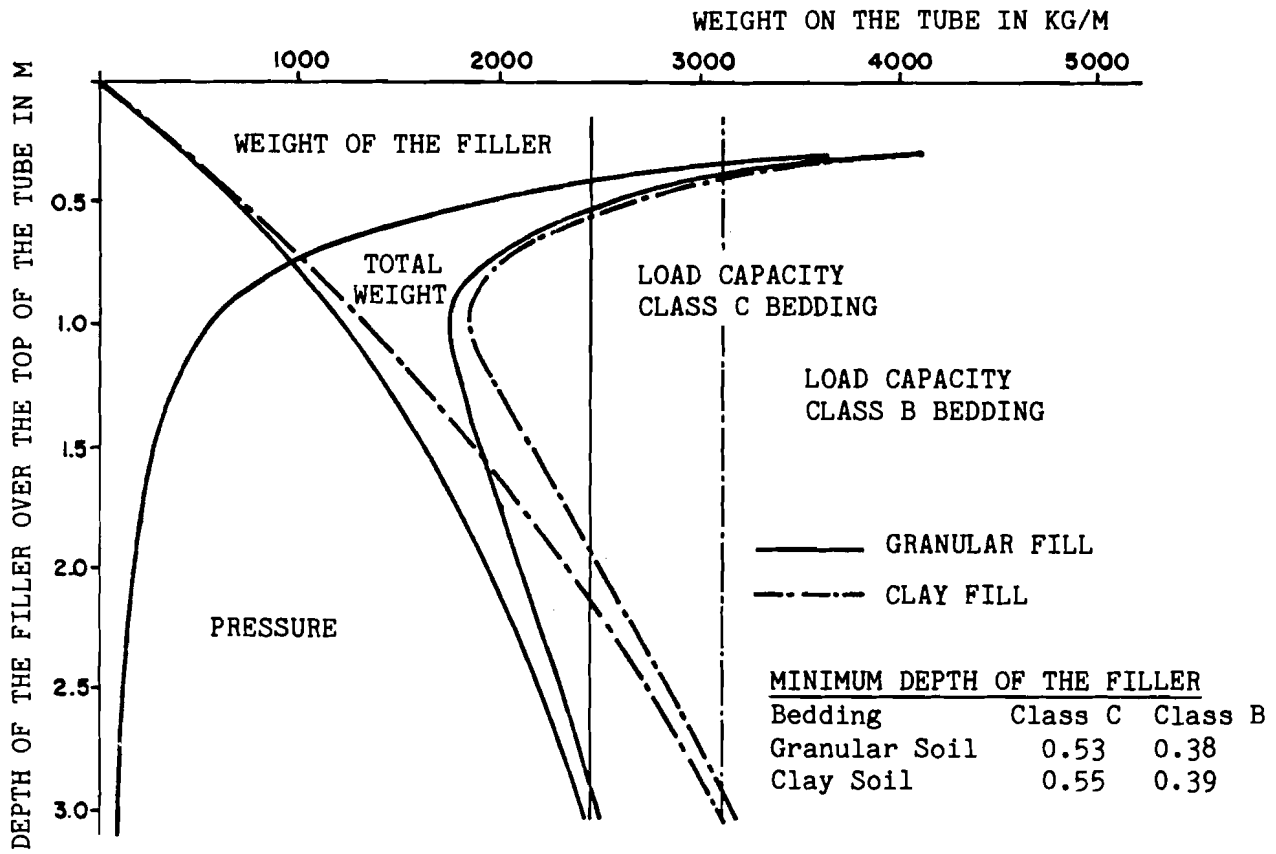

MINIMUM DEPTH OF THE FILLER

Bedding	Class C	Class B
Granular Soil	0.53	0.38
Clay Soil	0.55	0.39

Conclusions

a) The minimum height of the filler over the top of the tube, with a granular fill is 0.53 m if one uses a Class C padding and 0.38 meters if one uses a Class B padding. If a clay fill is used the minimum height of the filler over the top of the tube is 0.55 m if one uses Class C padding and 0.39 m if one uses Class B padding.

b) There is a maximum depth at which one can place a tube without exceeding its load capacity. Observe that the load capacity exceeds 3 meters with gradular fill and 2 meters with clay fill, if one uses Class C padding.

c) The load capacity becomes larger as the quality of padding is improved. Using a Class B bed, the load capacity exceeds 2.95 m instead of 2 m, in the case of clay fill.

Type B padding: A tightly compacted granular bed; tightly compact fill.
Type C padding: A tightly packed granular bed, lightly packed fill

6.5 Conclusions

1. The minimum depth for the placement of a tube system depends on the characteristics of the tubing, the material of the fill of the ditch, and in the case of a rigid tube, the type of padding.

2. If one increases the depth of the placement of the tubing one raises the cost of excavation and filling of the ditch.

3. There is a depth at which the combined effect of the weight of the fill and the load is minimal.

4. There is a maximum depth at which one can install tubing without exceeding this load capacity.

6.6 References

6.6.1 Design and Construction of Sanitary and Storm Sewers, Manual of Practice No. 9, Water Pollution Control Federation, 1969.

6.6.2 P.V.C. Pipe-Design and Installation. Manual of Water Supply Practices No. M23. American Water Works Association, 1980.

6.6.3 Concrete Pressure Pipe, Manual of Water Supply Practice, No. M9 American Water Works Association, 1979.

6.6.4 Sprangler, M. G. "Underground Conduits-An Appraisal of Modern Research", Transactions, ASCE, 113, 316 de 1948. Tambien en Apendice A de Handbook of Drainage and Construction Products. ARMCO.

6.6.5 Howard, A. K. "Modulus of Soil Reaction Values for Buried Flexible Pipe". Journal of Geotechnical Engineering Division Vol. 103, GT-1., January 1977, pp. 44-43, ASCE.

Minimum Diameter for the In-House Waste Disposal System and its Connection to the Main System

7.1 Objective

To study the minimum diameter of the tubing for the waste disposal system within a low-cost house and its connection with the public network, from the point of view of cost.

7.2 Conditions Assumed

a) A 4" connection from the toilet to the central street tubing with 1½" connections for the shower and the sink and only a 4" collector in the sidewalk

b) Same as above but reducing the tube from 9" to 3"

c) A 3" tube between houses but joining the sewage discharge connection of two houses in the sidewalk to make a single connection from the sidewalk to the central tube system of 4 PVC tube and maintaining a 4" central collector in the sidewalk.

7.3 Costs

The costs of the alternatives are presented in table 7-1 attached.

7.4 Cost Comparison

From the attached table one can conclude that, considering the value of the system with a 4" connection for each house to represent 100%, by reducing the size of the tube to a 3" diameter, the cost would be 84% as much as the single connection per house option or the double service connection option.

The 3" case was estimated by considering that it is the minimum size that one can install for toilets both because of the size of the trap and the level of peak demand which can be as much as 1.5 liters/sec. Nonetheless, recognizing that the probability of clogging is greater, costs were added for cleaning to houses with 3" tubs. These costs weren't included in the houses using 4" tubes.

With the double service connection option, a 4" tube was considered the smallest possible tube that can safely be used during the peak demand periods (See Case 5).

7.5 Conclusion

- With the systems described above one achieves significant savings by reducing the diameter of the service connection to 3". This is because by joining the drain connections in the street one does not realize a reduction in the complete cost of the intrahouse sewerage. Although, if one considered only the cost of the tubing in the street, the cost would appear to be half that of a system with a connection for each house.

- Option B with 3" tubing is more economical

- Option C with 3" tubing and a single connection to the 4" system is a little more expensive than the above. Still, from the point of view of the overall waste disposal system, which does not include the internal system, it could appear more attractive by removing every other connection.

Option A

With 4" PVC tube; 1 connection per house

	Unit	P/U	Quantity	Cost
4" PVC tube	m	4.15	10.50	43.58
4" PVC elbow joint	u	6.96	1	6.96
4" T-joint	u	9.30	3	27.90
1½" tubing	m	1.23	6	7.38
1½" trap	u	5.40	1	5.40
1½" elbow joint	u	1.05	2	2.10
4" installation int.	m	3.50	6	21.00
4" installation ext.	m	5.50	4.50	24.75
1½" installation	m	2.50	6	15.00
				154.07

Option B

With 3" PVC Tube; 1 connection per house

	Unit	P/U	Quantity	Cost
3" PVC tubing	m	3.15	10.50	33.08
3" elbow joint	u	4.37	1	4.37
3" tube joint	u	5.25	3	15.75
1½" tubing	m	1.23	6	7.38
1½" trap	u	5.40	1	5.40
1½" elbow joint	u	1.05	2	2.10
3" installation int.	m	3.50	6	21.00
3" assembly ext.	m	5.50	4.50	24.75
1½" assembly	m	2.50	6	15.00
3" adapt. and Reg.	u	3.25	1	3.25
				132.08

Option C

With 3" tube; two houses per Y" connection

	Unit	P/U	Quantity	Cost
3" tubing	m	3.15	14	44.10
3" T-joint	u	5.25	7	36.75
4" PVC tubing	m	4.15	4.5	18.68
4" X 3" T-joint	u	9.30	2	18.60
4" elbow joint	u	6.96	1	6.96
1½" tubing	m	1.23	12	14.76
1½" trap	u	5.40	2	10.80
1½" elbow joint	u	1.05	4	4.20
3" assembly	m	3.50	14	49.00
4" assembly	m	5.50	4.5	24.75
1½" assembly	m	2.50	12	30.00
3" Adap. and Cleaning Plug	u	3.25	2	6.50
Total for 2 houses				165.10
	Averge Cost per house			137.55 (86%)