PN-AAS-864
ISN 40280
9210054

Alternative Approach for Granular Fertilizers

COMPACTION

By
Dr. M. S. Lupin
and
Mr. N. D. Le

International Fertilizer Development Center

Abstract

As fertilizer use increases, especially in the developing countries, the trend will likely be to use more compound, multinutrient, granular fertilizers rather than single-nutrient materials. Granular compound fertilizers are most commonly made using a liquid phase to form large, agglomerated granules, which then have to be dried and/or cooled before use.

This bulletin describes a relatively simple process—compaction—in which the granular fertilizer is made by a dry process, without the necessity for a liquid phase such as water, steam, or melt to form the granules. The process does not require energy for drying and cooling but only electricity for equipment operation. The process is considered an alternative to water/steam granulation of solid dry materials. Preliminary estimates of the investment and conversion costs indicate that the compaction/granulation process compares very favorably with the steam-granulation process.

The suitability of various fertilizer raw materials for use in this dry granulation process is discussed. This report will be helpful in evaluating compaction for fertilizer granulation in comparison with liquid granulation processes.

Library of Congress Cataloging in Publication Data

Lupin, M. S. (Michael S.), 1940-
Compaction, alternative approach for granular fertilizers.

(Technical Bulletin / International Fertilizer Development Center ; T-25)
Bibliography; p.
1. Fertilizers. 2. Compacting. I. Le, N. D., 1945- . II. Title. III. Series: Technical bulletin (International Fertilizer Development Center) ; T-25.
TP963.L86 1983 668'.62 83-12606
ISBN 0-88090-045-8

International Fertilizer Development Center
P.O. Box 2040
Muscle Shoals, Alabama 35660

Phone No. 205-381-6600
TWX-810-731-3970 IFDEC MCHL

Edited by E. D. Frederick and E. N. Roth
Illustrations by T. L. McGee and J. C. Starkey

IFDC publications are listed in *Publications of the International Fertilizer Development Center*, General Publication IFDC-G-1, which is available free of charge.

Table of Contents

	Page
List of Tables	i
List of Figures	i
Abbreviations	i
Measurements	i
Introduction	1
Description of Compaction Process	2
Principles	2
Factors Affecting Compaction	2
Roll Press Design	4
Process Design	5
Evaluation of Product Quality	6
Applications	7
Review of Reported Fertilizer Applications	7
Test Work at IFDC	7
Suitability of Fertilizer Materials for Compaction/Granulation Process	10
Process Economics	11
Premises and Scopes of Studies	11
Investment and Conversion Cost Estimates	12
Conclusions	16
Bibliography	19
Appendix A	23
Appendix B	24

List of Tables

1. Literature Sources on Granular Fertilizers Made by the Compaction/Granulation Process 7
2. Granular Fertilizers Made by the Compaction/Granulation Process at IFDC 9
3. Physical Properties of Compacted Granular Fertilizers Made at IFDC 10
4. Direct and Indirect Fixed Investment Cost as Percentages of Process Equipment Cost 12
5. Fixed Investment Estimates for the Compaction/Granulation Process 13
6. Fixed Investment Estimates for the Steam-Granulation Process 13
7. Conversion Cost Estimates for the Compaction/Granulation Process 13
8. Conversion Cost Estimates for the Steam-Granulation Process 14
9. Summary of Investment and Conversion Cost Estimates 14
10. Conversion Cost Versus Capacity Utilization for the Base Case—Compaction and Steam-Granulation Processes 15

List of Figures

1. Schematic Diagram of a Compactor 2
2. Schematic Representation of the Mechanisms of Particle Compaction 3
3. Desired Size Distribution of Feed to Compactor 3
4. Roll Press With Cantilever Shaft Design 4
5. Roll Press With Mill Shaft Design, Hydraulic Pressure System, and Force Feeders 4
6. Schematic Diagram of Compaction/Granulation Process 5
7. Flow Diagram for Granular NPK Fertilizers by the Compaction/Granulation Process 6
8. IFDC Laboratory-Scale Compactor with Corrugated Rolls 8
9. Schematic Diagram of Batchwise Compacting Procedure at IFDC 8
10. Schematic Diagram of IFDC Continuous Compaction/Granulation System 8
11. Typical Flow Diagram of Solid Feed Steam-Granulation Process 11
12. Fixed Investment Versus Recycle Ratio for Compaction and Steam-Granulation Processes 14
13. Conversion Cost Versus Recycle Ratio for Compaction and Steam-Granulation Processes 15
14. Conversion Cost Versus Capacity Utilization for Compaction and Steam-Granulation Processes 15

Abbreviations

AS ..... ammonium sulfate
ATSP ..... ammoniated triple superphosphate
DAP ..... diammonium phosphate
DCD ..... dicyandiamide
KCl ..... potassium chloride
K_2SO_4 ..... potassium sulfate
MAP ..... monoammonium phosphate
NPK ..... compound fertilizer containing three primary nutrients N, P_2O_5, and K_2O
PPD ..... phenylphosphorodiamidate
PR ..... phosphate rock
TSP ..... triple superphosphate

Measurements

cm ..... centimeter
g/cm^3 ..... grams per cubic centimeter
kcal ..... kilocalorie
kg/granule ..... kilograms per granule
kg/hour ..... kilograms per hour
kWh ..... kilowatt-hour
mg/cm^3 ..... milligrams per cubic centimeter
mg/cm^2 ..... milligrams per square centimeter
mm ..... millimeter
mt ..... metric ton
mt/cm ..... metric tons per centimeter
mtph ..... metric tons per hour
mtpy ..... metric tons per year
m/second ..... meters per second
$ ..... U.S. dollars

Introduction

The use of fertilizers to increase food production is universally accepted and in many areas the standard practice is to apply single-nutrient fertilizers containing only nitrogen, phosphorus, or potassium. The materials normally used in single-nutrient applications are urea, ammonium sulfate, ammonium nitrate, phosphate rock, superphosphates, or potash (potassium chloride). However, the use of multinutrient, or compound, fertilizers containing two or three major nutrients as well as secondary and minor nutrients is expanding. There are several reasons for the increasing popularity of compound fertilizers:

1. Labor costs are reduced since several nutrients can be applied with one application.
2. Simultaneous application of major, secondary, and minor nutrients can have a positive effect on plant response to the fertilizer.
3. Many secondary and minor nutrients are required in very small amounts and cannot be applied accurately alone.

The compound fertilizer can be applied as either a liquid or a solid. Liquid fertilizers, either as clear solutions or suspensions, are normally used only in the United States, Western Europe, and some parts of Latin America. In developing countries single-nutrient and compound fertilizers are applied predominantly in solid form by hand; in some cases solid applicators or distributors are used.

Solid compound fertilizers can be produced by several processes depending on the raw materials used:

1. Dry mixing of powdered or nongranular materials.
2. Granulation of dry-mixed materials with water and/or steam where chemical reactions are not essential to the process.[1]
3. Granulation of dry materials with water and/or steam and the addition of materials that react chemically, such as ammonia, sulfuric acid, and phosphoric acid.
4. Slurry granulation in which the materials to be granulated are formed by chemical reactions between sulfuric, phosphoric, or nitric acids and ammonia or phosphate rock.
5. Melt granulation in which the granules are formed by cooling a hot fluid melt as in the case of urea and ammonium nitrate.
6. Bulk blending in which the dry, single, or compound fertilizers in granular form are mixed mechanically.

Process 1 gives a fine product that may cake badly and also may cause dust problems on application. Processes 2-5 give granular products, normally in the size range of 1-4 mm, which can be applied easily with uniform distribution of the nutrients. These granular products are usually sufficiently hard to be handled without dust or caking problems although in some cases conditioning agents must be added. Process 6 is a mechanical mixing of single or multinutrient granular products to give a homogeneous blend. This process requires a relatively low capital investment and has low conversion costs, but it requires raw materials properly matched in a particle size range to avoid segregation of the product.

The compaction process for granulation described in this bulletin is considered an alternative for process 2, namely the steam granulation of dry solids. It also can be considered an alternative to processes 1 and 6. It cannot replace processes 3, 4, and 5 in which the liquid phase is partly or wholly supplied by one or more of the following: ammonia, ammonia solutions, sulfuric acid, phosphoric acid, nitric acid, urea melt, or ammonium nitrate melt.

The compaction process is a dry granulation process in which the mixed raw materials are agglomerated by pressure alone. It saves both energy and capital since it involves no drying and/or cooling stages.

The compaction, or pressure agglomeration, process has been known for almost 150 years in the coal industry and has been used in industries such as metallurgy, ceramics, and pharmaceuticals. It has been used to produce fertilizers, in particular granular potash (potassium chloride), since the 1960s.

This bulletin describes the principles involved in the compaction process and the application of the process to production of granular compound fertilizers. Recent economic evaluations of the process are given which indicate that compaction offers considerable capital and conversion cost and energy savings over the conventional steam/water granulation of dry solids.

1. Hereinafter referred to as the steam-granulation process.

Description of Compaction Process

Principles

The basic principle of agglomeration by compaction is the application of pressure on a fine powder as it flows between two counter-rotating rolls as shown in Figure 1. The nip area is the area between the rolls where the compaction takes place, and the nip angle depends on the material being compacted. The effect of the applied pressure is to remove the air between the particles of the bulk powder and so densify the material. This densification causes extremely close contact between individual particles and the formation of a very dense, strong flake (sheet) in which the forces holding the particles together may be molecular forces of attraction (Van de Waals), adsorption forces, solid bridges, or mechanical interlocking. The formation of solid flakes, or sheets, by such a roll-pressing process using smooth, corrugated, or waffle-surface rolls is normally referred to as compaction. The reduction of the flakes to a granular size of 1-4 mm by crushing and screening is known as granulation; thus, the process known as compaction/granulation involves the initial densification and formation of a solid flake, followed by crushing of the flake and screening to recover the desired granule size. The complete process including recycle streams is discussed later. A variation of the process, known as briquetting, involves feeding the powder through a set of counter-rotating rolls under pressure. The rolls have indented pockets that form individual particles or briquettes. This process is only suitable for particles greater than 8-10 mm in diameter. A related process, widely used in the pharmaceutical industry, is tableting; in this process individual particles are made by applying pressure to a powder in a die and then ejecting the compressed tablet.

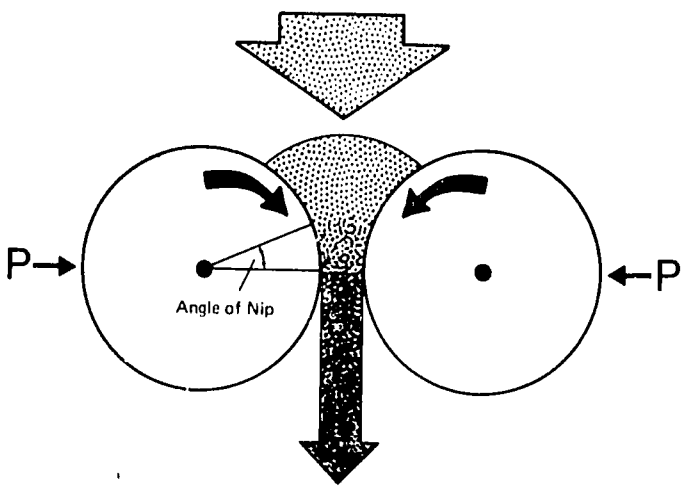

Figure 1. Schematic Diagram of a Compactor.

The application of the compaction process to fertilizers to form granular products is normally performed without the aid of any added binder, although additives are used in applications of the process by other industries, including the coal industry. Such fertilizer materials as urea or potassium chloride, however, are soft or plastic crystals that form very cohesive agglomerates under pressure without a binding agent. They can act as binders for other nonplastic fertilizer materials.

Factors Affecting Compaction

The conversion of a dry powder into a hard, strong granule by pressure alone depends on a variety of factors; some are related to the nature of the material itself and others to the machinery used.

Feed Characteristics

Some of the qualities of the feed material that have an effect on its compactibility include moisture content, size, shape, plasticity, hardness, and temperature. As mentioned previously, the process of agglomeration by pressure involves the removal of air between the particles and the formation of a dense, uniform agglomerate. For the material to be fed into the nip area of the rolls, it must have good flow characteristics; this requires that the moisture content be fairly low. This does not mean that the feed material has to be completely dry, and in some cases a small amount of moisture may be beneficial to the compaction process.

The strength of the flake is enhanced by new crystalline bridges being formed between particles under pressure. The size and shape of the particles in the feed material affect its bulk density. Because the main process of compaction is removal of air, there is a direct relationship between the size of the particles and compaction efficiency. The stages involved in the formation of the very dense agglomerate from the aerated powder are shown in Figure 2. The final flake will have a density of at least 95% of the true density of the material. The stages can be explained in terms of (1) restacking or rearrangement, (2) fragmentation, and (3) plastic flow. Although the initial stage is rearrangement, fragmentation and plastic flow are not necessarily consecutive mechanisms. Thus, fragmentation may or may not be accompanied by plastic flow, and plastic flow may occur with or without prior fragmentation. The normal compaction ratio, defined as the ratio between the final flake density and the bulk density of the feed material, does not normally exceed 2.5:1. In other words, the amount of air being removed should not exceed 60% of the volume of the feed material. In order to obtain optimum packing and density, the feed powder should consist of a wide range of particle sizes, preferably in the range of 0.1-1.0 mm. Material smaller

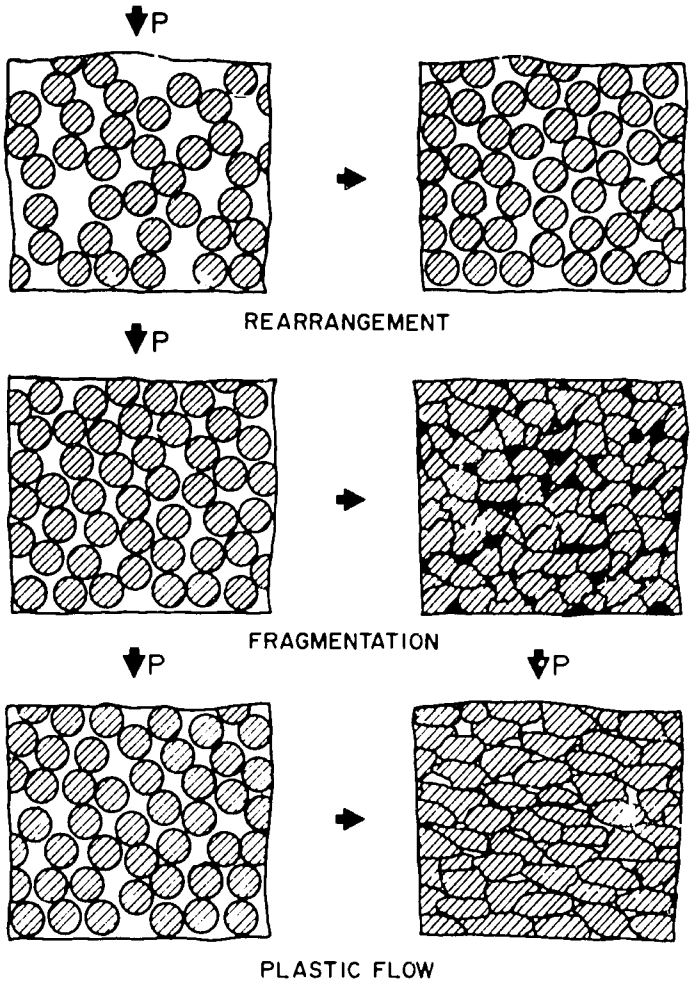

Figure 2. Schematic Representation of the Mechanisms of Particle Compaction.

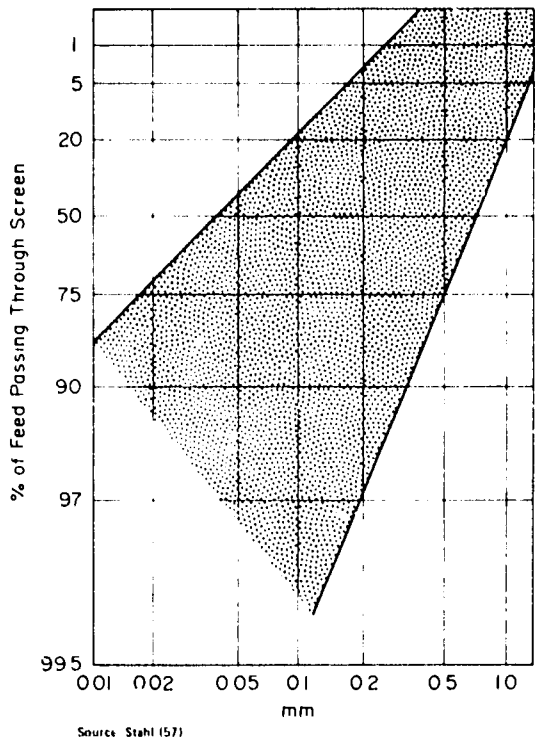

Figure 3. Desired Size Distribution of Feed to Compactor.

than 0.1 mm will likely contain too much air, and particles larger than 1 mm will require energy to crush them to a smaller size. The size distribution desired for efficient packing is illustrated in Figure 3. The shape of the particles will also influence the packing characteristics of the powder. Similarly, the hardness and plasticity of the individual particles will influence the ease with which the compaction process occurs and the pressure required to form the agglomerate. Some materials such as potassium chloride, diammonium phosphate, and urea have good plasticity and compact well, whereas others such as potassium sulfate, ammonium sulfate, kieserite, or phosphate rock lack good plasticity and thus are more difficult to compact.

The temperature of the feed material affects the compaction, and the temperature of the material in the nip area increases because of the heat generated by frictional forces acting on the particles. The feeding characteristics improve with an increase in temperature and give a denser flake. The temperature must be controlled properly, especially with urea-based mixtures, to avoid excess plasticity in the feed and thus prevent it from sticking to the rolls. The temperature should not exceed 70°-80°C for most mixtures and can be controlled by internal cooling of the rolls.

Another aspect that has to be considered in association with the feed material is the addition of binders. The properties of some poorly compactible materials or mixtures can be improved by the addition of binders, but these necessarily have to be used in small quantities to maintain the formulation concentration. Water has been mentioned previously as being beneficial in certain situations, and liquid molasses also has been used. Two fertilizer materials, urea and potassium chloride, are usually very easily compacted and can be utilized as binders for other less compactible fertilizer materials.

Machine Characteristics

Pressure—The pressure required to obtain a dense compacted flake as the powder passes through the counter-rotating rolls is defined in terms of tons per linear centimeter where the total force applied by the roll press is divided by the roll width. This unit is used since the pressure is applied in a dynamic rather than a static system. The pressure required to form the dense flake is also a function of the roll diameter. As the diameter of the roll increases, the thickness of the flake increases (flake thickness will usually be 0.01%-0.03% of the roll diameter). The effect of roll diameter is discussed later; the optimum flake thickness for a particular pressure has to be evaluated for each material because the pressure on the material will decrease toward the center of the flake. Therefore, attempts to increase production rate by increasing the throughput (i.e., flake thickness for a given applied force) will result in a maximum thickness above

which the flake will be weaker and the production of onsize granular material will not be increased.

Typical pressures for some fertilizer materials for a large diameter roll are:

Urea-based NPK fertilizers	2-4 mt/cm
Potassium chloride	4-5 mt/cm
NPK fertilizers	3-8 mt/cm
Ammonium sulfate	10 mt/cm
Calcium nitrate	6 mt/cm
Calcium carbonate	20 mt/cm

Roll Press Design

There are certain essential features of large roll presses and factors that must be considered in their design and manufacture for commercial production of granular fertilizers. The roll press consists basically of a frame, two rolls for pressing, associated bearings, a drive motor, reduction gear, and a pressurizing system. For small experimental and pilot-scale presses, the cantilever-shaft frame is used where the rolls are located outside the frame as illustrated in Figure 4. This design allows an easy change of rolls for experimental work. For larger machines the mill-shaft frame is used. In this design both ends of the two roll shafts are supported by bearings, and the rolls are located within the frame as illustrated in Figure 5. The frame of the press is designed to absorb all of the forces internally.

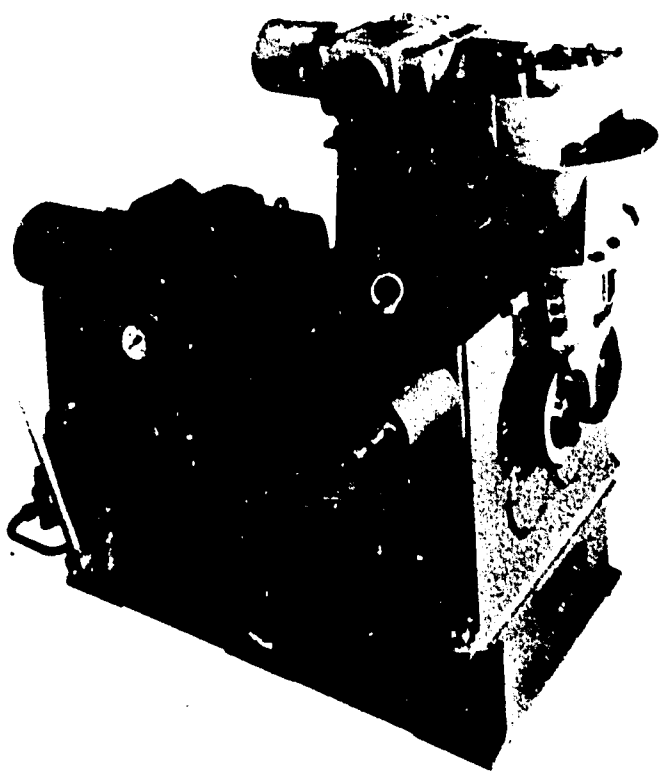

Manufacturer: K. G. Industries, Inc.
Source: Pietsch, W. 1976. *Roll Pressing*, Heyden & Sons, Ltd. Reprinted by Permission of John Wiley & Sons, Ltd.

Figure 4. Roll Press With Cantilever Shaft Design.

Source: Köppern GmbH and Co. KG., Hattingen, Federal Republic of Germany.

Figure 5. Roll Press With Mill Shaft Design, Hydraulic Pressure System, and Force Feeders.

The pressure is applied by a hydraulic pressure system in which hydraulic cylinders act on bearing blocks and press the moveable roll toward the second fixed roll. A spacer stop ensures that the rolls do not touch if there is no material between them. The hydraulic system is equipped with diaphragm accumulators to absorb pressure surges during operation and to ensure that a constant pressure is applied. Relief valves prevent overpressure if hard foreign objects enter between the rolls.

The roll-drive system is designed for a single motor to drive both rolls through coupling gears that reduce the speed. In most applications the circumferential roll speed will not be more than 1.2 m/second. Roll-timing methods are employed to ensure continuous alignment of the corrugated or otherwise shaped rolls. The bearings are heavy-duty, antifriction bearings normally equipped with circulating lubrication systems.

The roll surface for compaction/granulation can be smooth, corrugated, or waffle shaped. Smooth rolls are considered less efficient than the corrugated or waffle-shaped rolls, which give better flake formation. The rolls can be made as integral roll and shaft assemblies, as roll tires, or as segmented rolls. For fertilizer applications the first method is the simplest and is usually applicable; internal cooling of the roll surface can be incorporated to prevent overheating and sticking of materials that melt easily.

The capacity of a roll press is determined by the roll dimensions. As stated before, the thickness of the flake formed is normally in the range of 0.01%-0.03% of the roll diameter. The maximum width of roll that can be utilized will depend on the pressure, expressed in tons per linear centimeter, required to give a dense flake for the material being processed, and this width is governed by the total force available for a particular press. Another factor that affects the production rate is the rotational speed of the rolls. Normally the circumferential speed of the rolls will not exceed 1.2 m/second to enable good deaeration and compact flake formation. Typically, the roll diameter will be in the range of 30-100 cm, the roll width in the range of 15-150 cm, and the roll speed in the range of 0.6-1.2 m/second. Roll presses are now available that have a total applied force of up to 500 tons. Such a machine would give a nominal applied pressure of 5 mt/cm for a roll having a width of 100 cm. To compact a material requiring a specific pressure of 10 mt/cm, a roll having a width of 50 cm would be required.

An integral part of the roll press is the feed system that introduces the powdered material into the nip area of the rolls. Although gravity feed systems have been used, the present trend is to use force-feed systems so that production can be optimized for a given roll diameter. In such systems the force-feed screw not only feeds the powdered material into the nip area of the rolls but also partially deaerates and predensifies the feed prior to the application of pressure. Various types of feed screws are available depending on such properties of the feed as bulk density and flowability.

The normal arrangement is for the rolls to be set horizontally and the feeders arranged above the rolls as illustrated in Figure 5. However, occasionally the rolls are arranged vertically, and the feed is introduced from the side. This arrangement is generally used for very fine material that has an extremely low bulk density; it is not normally used for fertilizers.

Another common auxiliary to the roll press for the compaction/granulation process is the flake breaker, which is situated immediately below the compacting rolls. This is a two-roll crusher with extended pins set in the rolls, and its purpose is to break up the pressed flakes into small lumps that can then be fed into conventional crushing equipment without difficulty.

Process Design

The basic process steps required for compaction/granulation are shown in Figure 6 and include mixing of recycled fines with fresh feed, compaction, crushing (granulation), and screening. A typical flow diagram for a full production plant is shown in Figure 7. This flow diagram shows a multicomponent feed bin and weigh feeder for metering the raw materials. If necessary, they

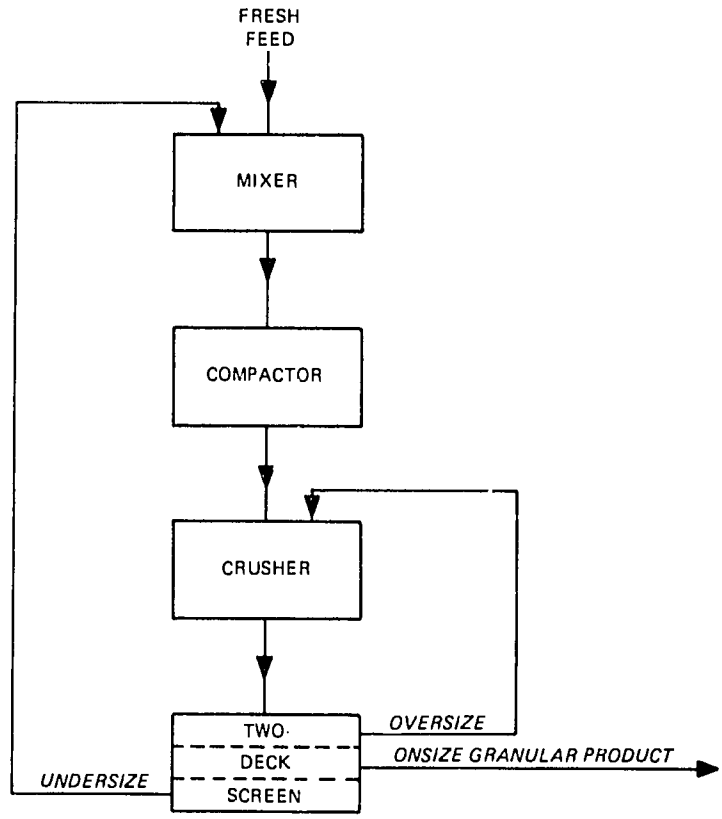

Figure 6. Schematic Diagram of Compaction/Granulation Process.

are then ground and mixed to provide a homogeneous mixture prior to compaction. Additives such as micronutrients also can be included in the mixing step. The fine mixed powder is transferred to the compactor via a paddle mixer where it is mixed with recycled fines from the screen. Normally the ratio of recycle to fresh feed is in the range of 1:1 to 2:1. The combined fresh feed and recycle are fed to the compactor with the aid of force feeders. As the powder is forced between the two counterrotating rolls under pressure, it is converted into a solid, dense flake. The large flakes are usually broken up into smaller pieces by a flake breaker situated directly under the compacting rolls and then fed to the primary or coarse crusher. The crushed material is taken by bucket elevator to a double-deck screen where it is separated into oversize, onsize, and undersize fractions. The undersize material is mixed with fresh feed and returned to the compactor. The oversize can be returned to the primary crusher or alternatively to a second smaller crusher, and this recrushed material is returned to the screen.

The crushing or granulating units are an integral part of the compaction/granulation process and are usually of the hammer mill or impact mill type, but other types, such as chain mills or roll granulators, can be used. Choice of the crusher will determine both the amount of recycle generated and the product quality (strength). Very vigorous crushing, such as with an impact mill, will yield a strong granular product and result in a relatively high

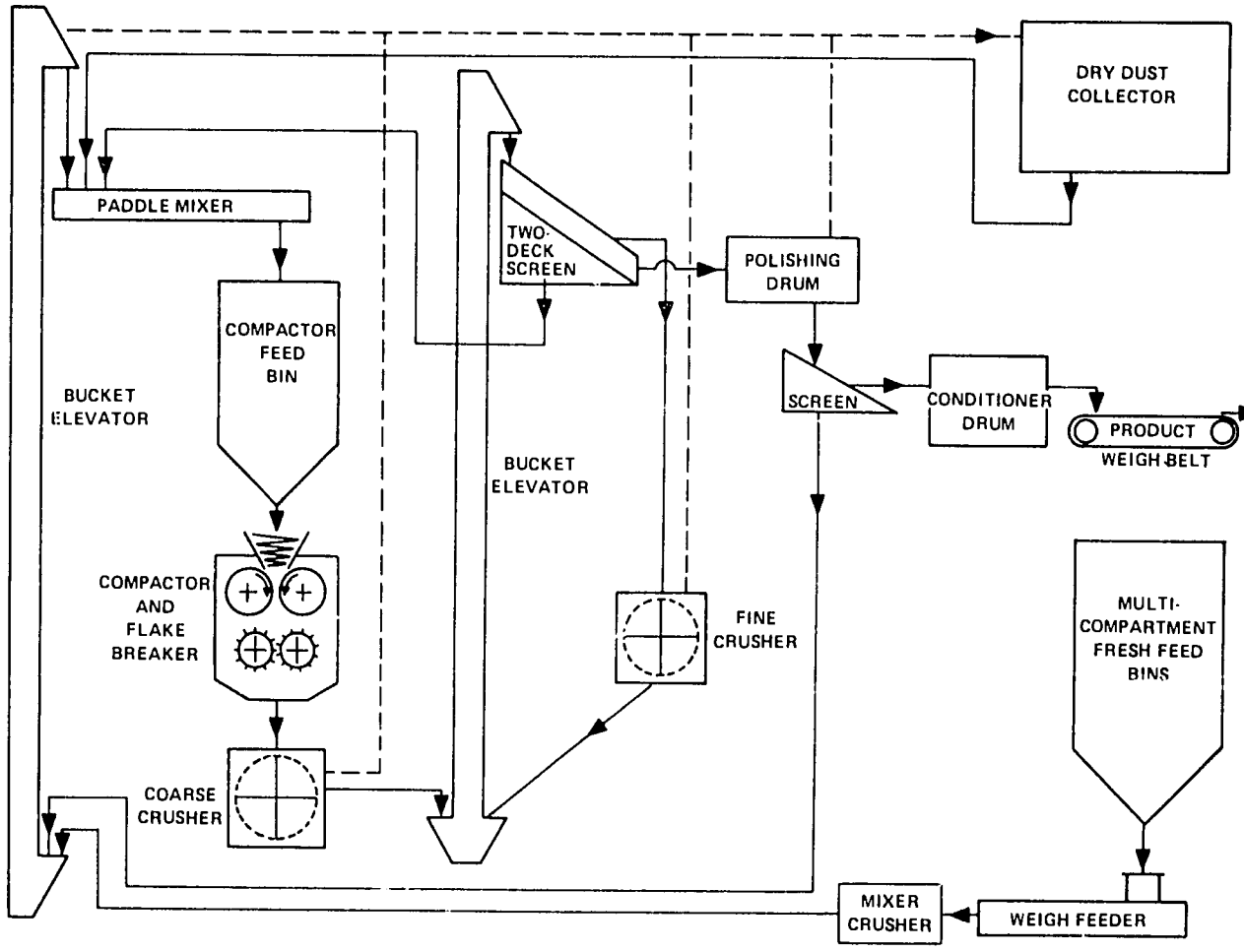

Figure 7. Flow Diagram for Granular NPK Fertilizers by the Compaction/Granulation Process.

recycle rate. Roll granulators will give a lower recycle rate and, therefore, higher production for a fixed throughput of the compactor, but the granules will be weaker. Generally, impact mills or hammer mills are preferred because they give a product that handles well and has good resistance to granule degradation. Several alternative arrangements are possible and have been discussed by Stahl *(57)*. He proposed the use of a two-stage crushing system with intermediate screening, as illustrated in Figure 7, and a relatively high internal oversize recycle as a means of obtaining the best production rate and granule quality.

The product from the compaction/granulation process is more angular than the products from drum or pan granulation. A polishing drum, designed to remove the sharp edges from the granules, can be added to the product treatment section. The product is rescreened on a single-deck screen, and the fines are returned to the compactor. The final step of product treatment before transfer to the warehouse is the addition of dust conditioning and/or anticaking additives. This step is optional, depending on such factors as the nature of the mixture being compacted, shipping (bagged or bulk), and storage conditions (time, temperature, and humidity).

A dry dust collection system—either in the form of a cyclone, a bag filter, or a combination of the two—is required. Dust, produced mainly in the crushers, screens, and elevators, is collected and returned to the compactor via the paddle mixer. All equipment is closed and all dust is collected and returned to the system; this ensures minimum losses of material. With this arrangement the process should not present pollution problems.

Evaluation of Product Quality

The accepted method for measuring the granule strength by crushing individual granules and expressing the strength as kilogram per granule is not applicable to compacted granules because of their irregular shape. A better indication of the strength of compacted granules is obtained by some form of abrasion test in which the granules are shaken with steel balls on a screen *(14, 52)*

or tumbled with rods or balls in an abrasion drum *(52)*. A detailed examination by Reschel and Zech *(52)* of methods used to evaluate the strength of compacted, granular potash shows that no one standard method has been adopted and that variations of both screen and drum methods are used. However, these authors considered the screen abrasion to be easier to perform and more readily standardized. At IFDC a screen abrasion test with steel balls has been established as a standard for evaluating compacted products, and the abrasion resistance is expressed as the amount of dust (minus 0.5 mm) generated by shaking a standard weight of a predetermined size of granules with a known number of steel balls for a fixed time on a standard 0.5-mm screen.

Other physical properties tests such as bulk density, angle of repose, bulk and bag storage for caking characteristics, critical relative humidity, and moisture penetration or absorption are applicable to compacted granules.

Applications

Review of Reported Fertilizer Applications

Dry granulation by the compaction/granulation process was first applied commercially to fertilizers in the 1960s when the demand for granular potash (potassium chloride) developed. Potash particles with a size of 1-4 mm could not be produced by conventional wet granulation techniques, and the yield of large crystals from vacuum crystallizers used in the potash industry is quite low. The amount of coarse or granular potash from flotation of crushed silvinite also was not sufficient. The method adopted was the dry compaction of fine and/or standard-grade potash into solid flakes at a temperature above 100°C, followed by crushing and screening. The compaction unit is normally installed after the dryer of a conventional potash refining plant, which may employ flotation or crystallization; thus, no additional heating is required. Roll presses capable of producing up to 30 mtph of granular potash are in operation in most of the major potash-producing companies, and millions of tons per year of granular potash are produced by this process. Granular potassium sulfate also is produced by the same process. Table 1 provides a guide to literature concerning granular fertilizers and other agricultural products that have been made by the compaction/granulation process. The large-scale commercial application of the process is limited, so far, to the potassium salts mentioned above; however, in recent years, several compaction plants have been built in Europe for the manufacture of mixed fertilizers. In the United States the process is used commercially to make granular urea-formaldehyde products.

A related process, mentioned previously, is the formation of very large particles or briquettes by the roll press technique. This process has been applied to fertilizers in a few instances *(2, 29, 46)* and is used in the United States to make very large fertilizer spikes for application to trees *(3, 4)*.

Table 1.
Literature Sources on Granular Fertilizers Made by the Compaction/Granulation Process

Material	Reference No. in Bibliography
Ammonium chloride	43, 61
Ammonium sulfate	17, 35, 57
Ammonium sulfate + DCD[a]	48
Calcium carbonate	57
Calcium cyanamide	50
Calcium nitrate	44
Diammonium phosphate	5, 36
Gypsum ($CaSO_4 \cdot 2H_2O$)	59
Kieserite	36, 45
Lime	43, 45, 49
Monoammonium phosphate	5, 39
Mixed fertilizers (NPK)	5, 19, 36, 37, 39, 43, 44, 57, 60
N-P-K-Mg	60
Phosphate ores	43
Potassium chloride	5, 7, 11, 12, 13, 28, 30, 31, 32, 33, 34, 35, 36, 38, 39, 43, 44, 50, 53, 57, 62
Potassium chloride + micronutrients	15
Potassium sulfate	5, 6, 21, 36, 47, 50
Slow-release fertilizers	10
Thomas slag	62
Triple superphosphate	36
Urea	5, 19, 39, 43, 44, 57
Urea formaldehyde	45

a. Dicyandiamide.

Test Work at IFDC

In 1981 IFDC purchased a small two-roll laboratory-scale compactor/briquetter (Figure 8), and this roll press has been used extensively during the last 2 years in studies of the process for fertilizer materials.

The rolls (diameter, 12.5 cm; width, 5.08 cm) are arranged vertically and are fed by a screw feeder from the hopper at the side. A maximum force of 10 tons can be applied to the rolls. Compaction tests are performed

Manufacturer: Ferro-Tech, Wyandotte, Michigan, U.S.A.

Figure 8. IFDC Laboratory-Scale Compactor With Corrugated Rolls.

with corrugated rolls (depth, 1 mm; pitch, 5 mm) aligned at half pitch to give a solid wavy flake. The press is equipped with interchangeable sets of rolls with pockets of different sizes for briquette formation. The feed rate to the rolls is 50-60 kg/hour, depending on the feed material.

Most compaction tests have been performed on a batch basis using the scheme shown in Figure 9. The flakes produced by the compactor are crushed in a hammer mill and then screened on a two-deck circular vibrating screen.

Raw materials for mixed fertilizers are crushed, if necessary, to pass 20 mesh (Tyler) and premixed in conventional mixing equipment before the compaction test. The effect of recycle is examined in the batch method by mixing undersized material from the screen with fresh feed in the appropriate ratio and then compacting this mixture. Any oversized material is recrushed and rescreened. In some cases, the product is "polished" to remove sharp corners by tumbling it in a rotating drum.

The compactor, crusher, screen, and polishing drum have recently been incorporated into a continuous system where the oversize and undersize are continually returned to the crusher and compactor, respectively. This system facilitates the study of the effect of recycle in a continuous operation and also the effect of temperature as the material becomes heated somewhat during compaction to the flake. The schematic flow diagram of the continuous unit is shown in Figure 10. This unit can produce up to 20 kg/hour of granular product (minus 6- plus 14-mesh,

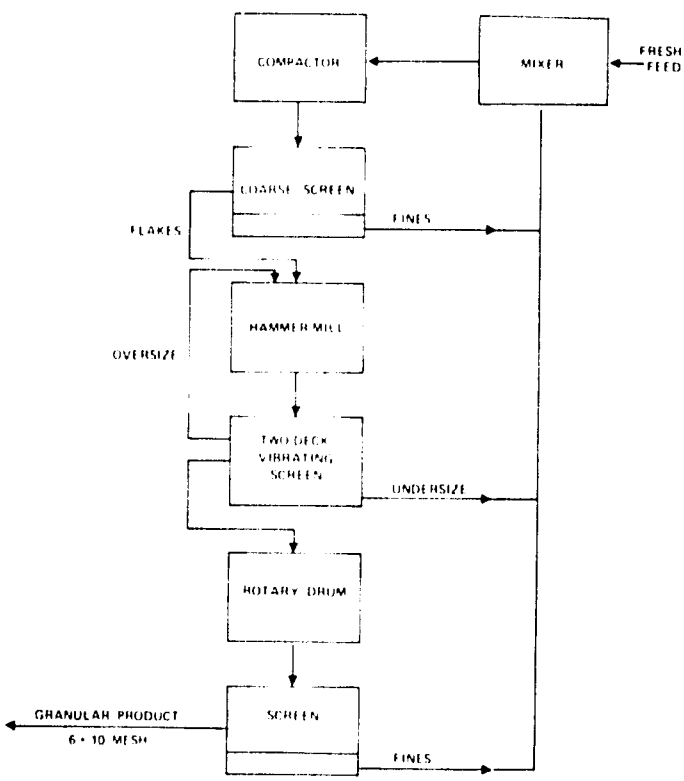

Figure 9. Schematic Diagram of Batchwise Compacting Procedure at IFDC.

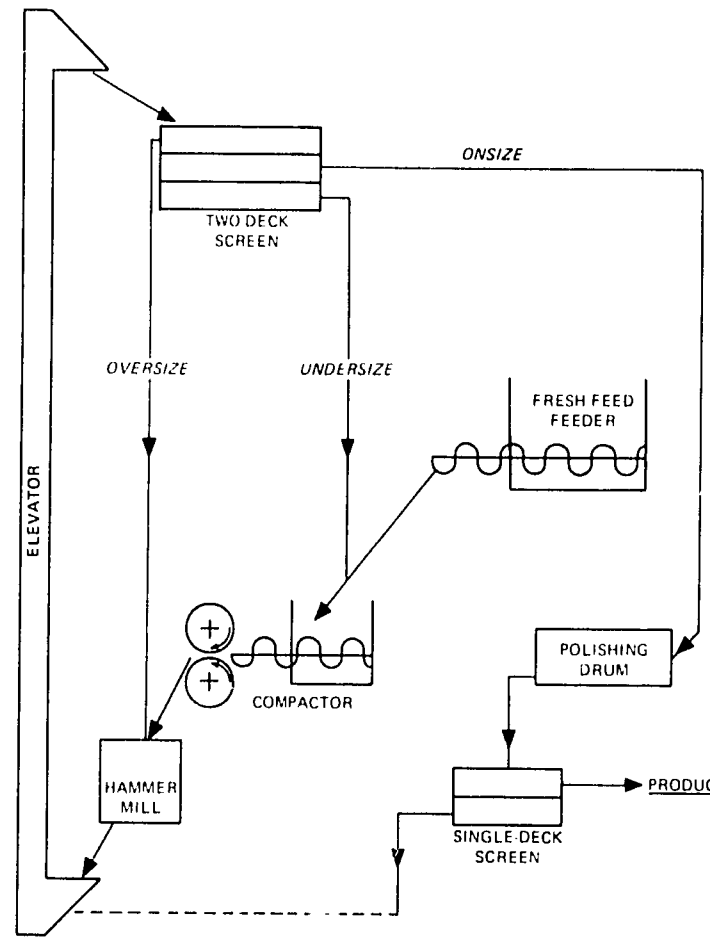

Figure 10. Schematic Diagram of IFDC Continuous Compaction/ Granulation System.

Table 2.
Granular Fertilizers Made by the Compaction/Granulation Process at IFDC

Raw Materials[a]	N	P_2O_5	K_2O	MgO	S	Recycle Used	Abrasion[b]
	(%)						(%)
Urea	46	0	0	0	0	yes	2.4[c]
MAP	10	49	0	0	0	no	4.9[c]
DAP	18	48	0	0	0	no	6.3[c]
TSP	0	48	0	0	0	no	3.5[c]
ATSP	4	47	0	0	0	yes	2.5[c]
Urea + PR	27	13	0	0	0	yes	1.6[c]
Urea + DAP	29	29	0	0	0	no	4.4[c]
Urea + AS	39	0	0	0	7	no	5.7
Urea + thiourea	42	0	0	0	15	no	7.0[c]
Urea + 7% DCD	47	0	0	0	0	no	3.6
Urea + 1% PPD	45	0.6	0	0	0	yes	4.0
Urea + 2% PPD	45	0.9	0	0	0	yes	4.3
Urea + 5% PPD	44	1.5	0	0	0	yes	4.0
Urea + KCl	29	0	23	0	0	no	8.5
Urea + K_2SO_4	32	0	16	0	5	no	7.7
KCl + MAP	5	26	30	0	0	no	6.6
KCl + DAP	9	21	30	0	0	no	4.6[c]
KCl + DAP	11	29	22	0	0	yes	4.4
KCl + TSP	0	28	26	0	0	no	9.7
Gypsum + DAP	5	15	0	0	13	no	11.4
Gypsum + TSP	0	15	0	0	12	no	17.4
Urea + PR + KCl	16	8	27	0	0	yes	2.2[c]
Urea + PR + KCl	14	14	14	0	0	yes	2.3[c]
AS + PR + KCl	6	22	13	0	0	no	9.8
TSP + PR + KCl	0	29	19	0	0	no	31.4
TSP + KCl + gypsum	0	25	11	0	6	no	11.6
Urea + DAP + KCl + phosphogypsum	12	23	5	0	7	no	2.5[c]
AS + TSP + KCl + gypsum	4	14	8	0	12	yes	13.2
Urea + AS + DAP + KCl	18	5	24	0	7	yes	2.0[c]
Urea + PR + KCl + kieserite	12	6	25	2.8	2	yes	8.6[c]
Urea + PR + K_2SO_4 + kieserite	11	6	22	2.7	10	yes	14.4[c]
Urea + PR + KCl + dolomite	11	6	25	2.3	0	yes	9.4[c]

a. MAP = monoammonium phosphate; DAP = diammonium phosphate; TSP = triple superphosphate; ATSP = ammoniated triple superphosphate; PR = phosphate rock; AS = ammonium sulfate; DCD = dicyandiamide; PPD = phenylphosphorodiamidate.
b. As discussed in the section on "Evaluation of Product Quality." For comparison, abrasion of compacted, granular potash is 2.5%.
c. After polishing.

Tyler) at a recycle ratio of 2:1. The examination of mixed fertilizers in the continuous unit is being continued.

Materials that have been granulated by the dry compaction process at IFDC are shown in Table 2. The table shows the raw materials used for the fertilizer grade produced; whether the effect of recycling the undersize was examined; and the strength of the granules produced, as determined by the abrasion test described previously. If the granules were polished, the abrasion test result reported is for the polished product. For comparison, the abrasion test result of commercial granular potash is included in Table 2. Physical properties of some selected compacted granular products made at IFDC are given in Table 3. None of these granular products were treated with any anticaking or antidusting agents, and only some were polished (see Table 2). The results reported have not been optimized and products obtained are not necessarily the best in terms of physical properties that can be achieved by the process. There are also limitations inherent when equipment of relatively small scale is used. However, the materials shown represent a range of fertilizer products that can be made by compaction and supplement those given in Table 1. It will be noticed in Table 2 that several of the products indicated high abrasion results, which suggest that the granules were relatively weak. Their acceptability during handling, storage, and distribution would need to be determined under simulated or actual use conditions.

Table 3.
Physical Properties of Compacted Granular Fertilizers Made at IFDC

Grade	Bulk Density[a]	True Density[b]	Porosity[c]	Critical Relative Humidity[a]	Moisture Absorption	Hygroscopicity[a]		
						Moisture Penetration	Moisture Holding Capacity	Moisture Holding Capacity
	(g/cm³)	(g/cm³)	(%)	(%)	(mg/cm²)	(cm)	(mg/cm³)	(%)
46-0-0	0.65	1.32	1.5	65-75	456	10.0	46	7.0
10-49-0	0.94	1.88	6.9	80-90	48.3	0	-	-
18-48-0	0.80	1.70	5.9	65-75	228	1.2	190	23.4
27-13-0	0.81	1.70	1.8	65-75	292	4.8	61	7.5
29-29-0	0.73	1.52	2.6	50-60	357	5.7	63	8.5
39-0-0-7S	0.67	1.41	0.7	50-60	544	15.0	36.3	5.5
29-0-23	0.71	1.48	-	55-65	579	5.0	115.8	16.4
32-0-16-5S	0.75	1.54	5.2	60-70	330	10.5	31.4	4.2
5-26-30	-	1.92	5.2	70-80	-	-	-	-
9-21-30	0.89	1.82	4.4	60-70	375	2.3	163	18.4
11-29-22	0.87	1.78	1.7	60-70	383	3.6	106.5	12.2
0-28-26	0.93	2.07	2.4	55-65	265	2.4	110.6	10.8
5-15-0-13S	0.81	1.97	9.6	75-85	53.6	0	-	-
0-15-0-12S	0.98	2.28	9.6	75-85	67.0	0	-	-
16-8-27	0.90	1.78	1.1	55-65	424	6.1	69	7.8
12-23-5-7S	0.71	1.87	17.1	50-60	260	5.2	50.0	6.7
4-14-8-12S	0.85	2.20	20.9	60-70	255	2.4	106.1	12.5
18-5-24-7S	0.78	1.68	-	50-55	525	7.5	70.1	9.0
12-6-25-2.8MgO-2S	0.90	1.88	4.3	40-50	445	7.4	60.1	6.7
11-6-22-2.7MgO-10S	0.99	2.13	3.8	50-60	303	6.5	46.6	4.7
11-6-25-2.3MgO	1.04	1.95	0.5	50-60	357	5.3	59.0	6.5

a. Standard procedures, TVA Special Report S-444, 1970.
b. Measured with Beckmann Model 930 Air Comparison Pycnometer.
c. Porosity calculated as percentage difference between apparent density, as measured with mercury pycnometer, and the true density.

Suitability of Fertilizer Materials for Compaction/Granulation Process

The previous sections have reviewed the literature reports and IFDC test work on compaction of fertilizer materials. As previously discussed ("Feed Characteristics"), some materials, such as potassium chloride, urea, and ammonium phosphates, compact more easily than others. However, even with potassium chloride the presence of reagents from the flotation process used to separate the potassium chloride from sodium chloride will adversely affect the compaction; for this reason, the reagents are normally removed by drying the potash at high temperatures (150°-200°C). Triple superphosphate (TSP) has been reported to compact readily *(36)*, although experience at IFDC, with the small test machine, indicates that TSP is difficult to compact because of feeding problems and its tendency to stick to the rolls. Phosphate rock can only be compacted with the aid of binders and at an elevated temperature, but it can be compacted with potassium chloride and urea which act as binders. Ammonium sulfate has been compacted at high pressure, but the presence of either impurities in waste product material from steel mills or byproduct material from caprolactam production causes difficulties. Both gypsum and phosphogypsum can be agglomerated by pressure (usually to give briquettes), but the phosphogypsum has to be sufficiently dry for proper feeding between the rolls. The presence of a small amount of phosphoric acid gives rise to corrosion problems. Both ammonium nitrate and sulfur have been briquetted by pressure alone, but the advisability of using this process to agglomerate these materials is in question. Sulfates, such as potassium sulfate or magnesium sulfate monohydrate (kieserite), are difficult to compact but can be incorporated into NPK mixtures with other more compactible fertilizers such as urea or ammonium phosphates.

In summary, some fertilizer materials, such as potassium chloride, urea, and ammonium phosphates, are readily compacted and can be used to help bind and compact less readily compactible fertilizers, such as phosphate rock, potassium sulfate, and magnesium sulfate.

Process Economics

A preliminary comparison of the economics of the compaction/granulation process versus that of the conventional steam-granulation process for the production of NPK compound fertilizers is presented in this section of the report. Preliminary fixed investment and conversion cost estimates for the two processes are developed and compared. The effects of recycle ratio and capacity utilization on the economics of the processes are evaluated. Premises and assumptions for the cost estimates and scopes of the studies are presented and discussed.

Premises and Scopes of Studies

Before detailed premises and assumptions for the cost estimates are discussed, definitions of various case studies for which the cost estimates are developed are provided in the following paragraph.

Definition of Case Studies

A plant design capacity of 20 mtph of NPK product is used for both processes. The process design for the compaction process was discussed in a previous section of this report. The recycle ratio was in the range of 1.0-2.0. The schematic block diagram and equipment flow diagram were presented in Figures 6 and 7. The equipment flow diagram of the steam-granulation process is shown in Figure 11. It is assumed that the steam-granulation process uses a conventional drum granulator and requires product drying, cooling, and coating. The moisture content of the product at the inlet of the dryer is assumed at 8%-10%. The recycle ratio is assumed in the range of 0.5 to 1.5. Details of the steam-granulation process are given in Appendix A.

To evaluate the effect of recycle ratio on the economics of both processes, the investment and conversion cost

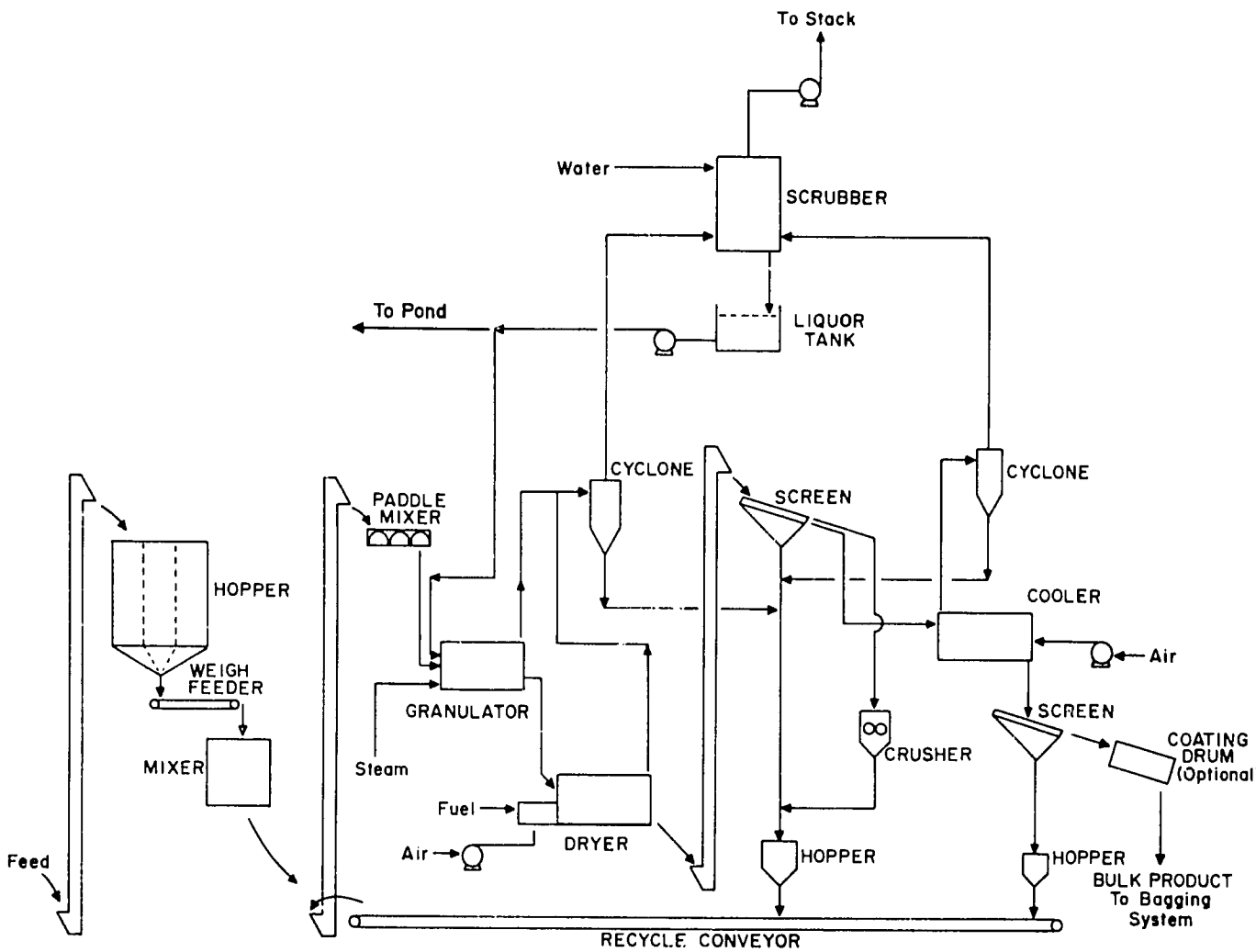

Figure 11. Typical Flow Diagram of Solid Feed Steam-Granulation Process.

estimates are developed at 100% capacity utilization for the following cases:

1. Three recycle ratios of 2.0, 1.5, and 1.0 for the compaction process with the recycle ratio of 1.5 as a base case.
2. Three recycle ratios of 1.5, 1.0, and 0.5 for the steam-granulation process with the recycle of 1.0 as a base case.

To evaluate the effect of capacity utilization on the conversion cost for both processes, the conversion costs are developed for the two base case processes at three different levels of capacity utilization: 100%, 80%, and 60%.

Premises and Assumptions for Cost Estimates

An itemized summary of the principal premises and assumptions for the investment and conversion cost estimates is presented in Appendix B. The premises, assumptions, and methodology for the cost estimates are discussed in the following sections.

The cost estimates are on a mid-1983 cost basis, and a plant location on the U.S. Gulf Coast is assumed. As mentioned previously, a plant design capacity of 20 mtph of NPK product for each of the two processes is used.

The fixed investment estimates are for an existing plant site with minor additions of auxiliary and support facilities. Allowances are not included for raw material and product storage and handling and bagging facilities. These costs are assumed to be the same for both processes. Also allowances are not included for interest and cost escalations during construction.

The fixed investment estimates are developed by estimating the delivered equipment costs and then estimating the other direct and indirect costs on the basis of the equipment costs. The equipment cost estimates are developed from preliminary proposals and published cost data. The cost estimates for equipment installation and other direct costs (materials and labor) are calculated as percentages of the equipment cost. The indirect cost items are estimated as percentages of the direct cost estimates. This fixed investment-estimating technique is commonly used for preliminary estimates, particularly for comparative estimates. For comparative estimates this estimating technique sometimes results in accuracies approaching those of more expensive definitive estimating techniques. Percentages of equipment cost used for estimating the direct and indirect investment cost for the compaction and granulation processes are shown in Table 4.

In general, conversion cost is defined as production cost less raw material costs. However, the conversion cost estimates in this study do not include allowances for bagging, interest on working capital, and raw material and product handling. These cost items are assumed to be the same for the two processes compared. Thus, the emphasis in the development of the conversion cost estimates is on the differential costs between the processes.

Table 4.
Direct and Indirect Fixed Investment Cost as Percentages of Process Equipment Cost

	Compaction Process	Steam-Granulation Process
	% of Delivered Process Equipment Cost	
A. Direct Cost		
1. Delivered process equipment cost	100	100
2. Process equipment installation	45	45
3. Instrumentation—installed	10	15
4. Electrical equipment—installed	15	10
5. Piping/ducts—installed	15	20
6. Auxiliary facilities	10	15
7. Building and structures (indoor plant types)	40	45
Total Direct Cost	235	250
	% of Total Direct Cost	
B. Indirect Cost		
1. Engineering and project management	10	10
2. Construction overhead and expenses	8	8
3. Preoperational and startup	5	5
4. Contractor's fee and contingency	18	18
Total Indirect Cost	41	41

The conversion cost estimates are developed on a mid-1983 cost basis and for various capacity utilizations. The annual production rate at 100% capacity utilization is 158,400 mt of NPK product. Fixed capital recovery (capital charges) is on the basis of a 12% annual interest rate and a 15-year time period. The fixed capital recovery, which corresponds to an annual charge of 14.7% of the fixed investment, would cover depreciation and interest charges. Conversion cost items that remain essentially constant on an annual basis over the likely range of capacity utilization, e.g., 50%-100%, are treated as fixed costs. Conversion cost items that essentially vary in direct proportion to operating rate are treated as variable costs and considered constant on a per unit of product basis.

Investment and Conversion Cost Estimates

On the basis of the premises and assumptions discussed above, fixed investments for the compaction process and steam-granulation process are presented in Tables 5 and 6. The conversion costs[2] (at 100% capacity utilization) versus recycle ratios for the compaction and

2. All conversion costs in this section are for 100% capacity utilization, except where specifically mentioned otherwise.

Table 5.
Fixed Investment Estimates for the Compaction/Granulation Process

Major premises: 1. Cost basis: 1983 US $
2. Location: U.S. Gulf Coast
3. Plant capacity: 20 mtph

	Fixed Investment		
	Recycle Ratio		
	2.0	1.5	1.0
	('000 $)		
A. Delivered process equipment cost	1,730	1,570	1,390
B. Total direct cost (235% of item A)	4,060	3,690	3,270
C. Total indirect cost (41% of item B)	1,660	1,510	1,340
Total Fixed Investment (B + C), rounded	5,700	5,200	4,600

Table 6.
Fixed Investment Estimates for the Steam-Granulation Process

Major premises: 1. Cost basis: 1983 US $
2. Location: U.S. Gulf Coast
3. Plant capacity: 20 mtph

	Fixed Investment		
	Recycle Ratio		
	1.5	1.0	0.5
	('000 $)		
A. Delivered process equipment cost	2,080	1,870	1,650
B. Total direct cost (250% of item A)	5,200	4,680	4,130
C. Total indirect cost (41% of item B)	2,130	1,920	1,690
Total Fixed Investment (B + C), rounded	7,300	6,600	5,800

steam-granulation processes are developed and presented in Tables 7 and 8, respectively. A summary of the investment and conversion cost estimates is shown in Table 9 and presented graphically in Figures 12 and 13. The conversion costs versus capacity utilization for the two base case processes are presented in Table 10 and Figure 14.

Compaction Process

As shown in Table 9, the fixed investment estimates for the compaction process are $5.7 million, $5.2 million, and $4.6 million for recycle ratios of 2, 1.5, and 1, respectively. Considering the plant with a recycle ratio of 1.5 as a base, the fixed investment for the plant with a recycle ratio of 2 is $0.5 million or about 10% higher, whereas the fixed investment for the plant with a recycle ratio of 1.0 is $0.6 million or about 12% lower.

The conversion cost estimates at 100% capacity utilization (Table 7) are $13.4/mt, $12.4/mt, and $11.3/mt for the recycle ratios of 2, 1.5, and 1.0, respectively. Considering the recycle ratio of 1.5 as a base, the conversion cost for the plant with a recycle ratio of 2 is $1.0/mt or 8.1%

Table 7.
Conversion Cost Estimates for the Compaction/Granulation Process

Major premises: 1. Cost basis: 1983 US $
2. Location: U.S. Gulf Coast
3. Design capacity: 20 mtph
4. Operating rate: 158,400 mtpy (100% capacity utilization)
5. Bulk product

Recycle ratio	2		1.5		1	
Fixed investment (FI), $ million	5.7		5.2		4.6	
Conversion Cost	**Requirement**	**$/mt**	**Requirement**	**$/mt**	**Requirement**	**$/mt**
Variable costs						
Electricity ($0.045/kWh)	40 kWh	1.80	34 kWh	1.53	28 kWh	1.26
Miscellaneous supplies		0.40		0.40		0.40
Subtotal		***2.20***		***1.93***		***1.66***
Fixed costs	**$/year**		**$/year**		**$/year**	
Operating labor and supervision	240,000		240,000		240,000	
Administrative and general expense	240,000		240,000		240,000	
Maintenance (6% of FI)	342,000		312,000		276,000	
Insurance and tax (2% of FI)	114,000		104,000		92,000	
Fixed capital recovery (14.7% of FI)	838,000		764,000		676,000	
Subtotal	***1,774,000***	***11.19***	***1,660,000***	***10.48***	***1,524,000***	***9.62***
Total Conversion Cost (rounded)		***13.40***		***12.40***		***11.30***

Table 8.
Conversion Cost Estimates for the Steam-Granulation Process

Major premises:
1. Cost basis: 1983 US $
2. Location: U.S. Gulf Coast
3. Design capacity: 20 mtph
4. Operating rate: 158,400 mtpy (100% capacity utilization)
5. Product moisture content (dryer inlet): 8%-10%
6. Bulk product

Recycle ratio	1.5		1.0		0.5	
Fixed investment (FI), $ million	7.3		6.6		5.8	
Conversion Cost	**Requirement**	**$/mt**	**Requirement**	**$/mt**	**Requirement**	**$/mt**
Variable costs						
Electricity ($0.045/kWh)	27 kWh	1.21	24 kWh	1.08	20 kWh	0.90
Steam ($12/mt)	0.075 mt	0.90	0.064 mt	0.77	0.054 mt	0.65
Fuel ($14/million kcal)	210,000 kcal	2.94	170,000 kcal	2.38	130,000 kcal	1.82
Miscellaneous supplies		0.80		0.80		0.80
Subtotal		***5.85***		***5.03***		***4.17***
Fixed costs	**$/year**		**$/year**		**$/year**	
Operating labor and supervision	320,000		320,000		320,000	
Administrative and general expense	320,000		320,000		320,000	
Maintenance (5% of FI)	365,000		330,000		290,000	
Insurance and tax (2% of FI)	146,000		132,000		116,000	
Fixed capital recovery (14.7% of FI)	1,073,000		970,000		853,000	
Subtotal	***2,224,000***	***14.04***	***2,072,000***	***13.08***	***1,899,000***	***11.99***
Total Conversion Cost (rounded)		***19.90***		***18.10***		***16.20***

Table 9.
Summary of Investment and Conversion Cost Estimates

Major premises:
1. Cost basis: 1983 US $
2. Location: U.S. Gulf Coast
3. Design capacity: 20 mtph
4. Operating rate: 158,400 mtpy (100% capacity utilization for 330 days)
5. Bulk product

	Compaction Process			**Steam-Granulation Process**		
Recycle ratio	**2.0**	**1.5**	**1.0**	**1.5**	**1.0**	**0.5**
Fixed investment ($ million)	5.7	5.2	4.6	7.3	6.6	5.8
Conversion cost ($/mt)						
Variable cost	2.2	1.9	1.7	5.9	5.0	4.2
Fixed cost	11.2	10.5	9.6	14.0	13.1	12.0
Total Conversion Cost	***13.4***	***12.4***	***11.3***	***19.9***	***18.1***	***16.2***

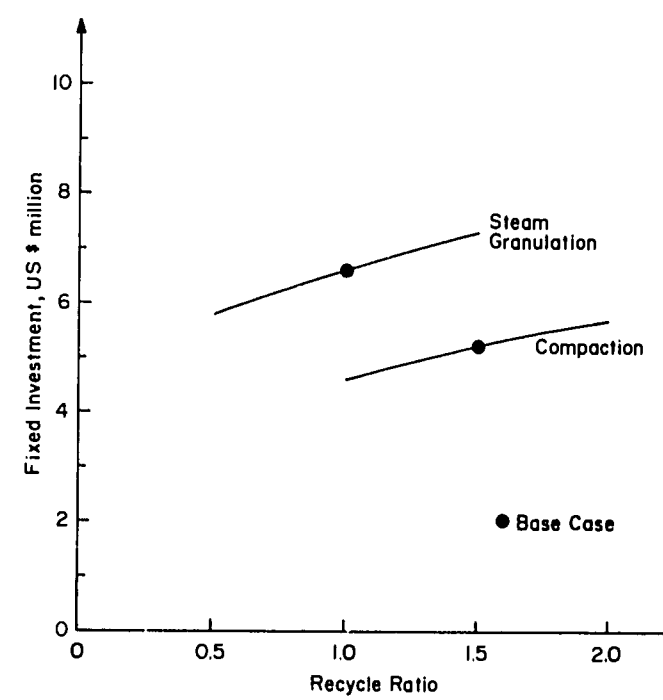

Figure 12. Fixed Investment Versus Recycle Ratio for Compaction and Steam-Granulation Processes.

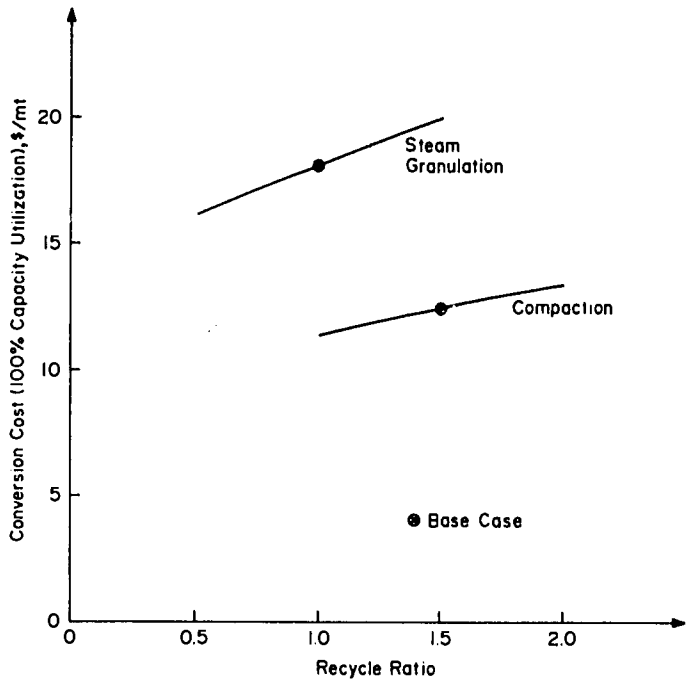

Figure 13. Conversion Cost Versus Recycle Ratio for Compaction and Steam-Granulation Processes.

Table 10.
Conversion Cost Versus Capacity Utilization for the Base Case—Compaction and Steam-Granulation Processes

Major premises:
1. Cost basis: 1983 US $
2. Location: U.S. Gulf Coast
3. Design capacity: 20 mtph
4. Recycle ratio (base case), 1.5 for compaction process, 1.0 for steam-granulation process
5. Bulk product

Capacity Utilization	Operating Rate	Conversion Cost: Compaction Process	Conversion Cost: Steam-Granulation Process	Conversion Cost: Differential Cost
(%)	(mtpy)	($/mt)		
100	158,400	12.40	18.10	5.7
80	126,720	15.00	21.40	6.4
60	95,040	19.40	26.80	7.4

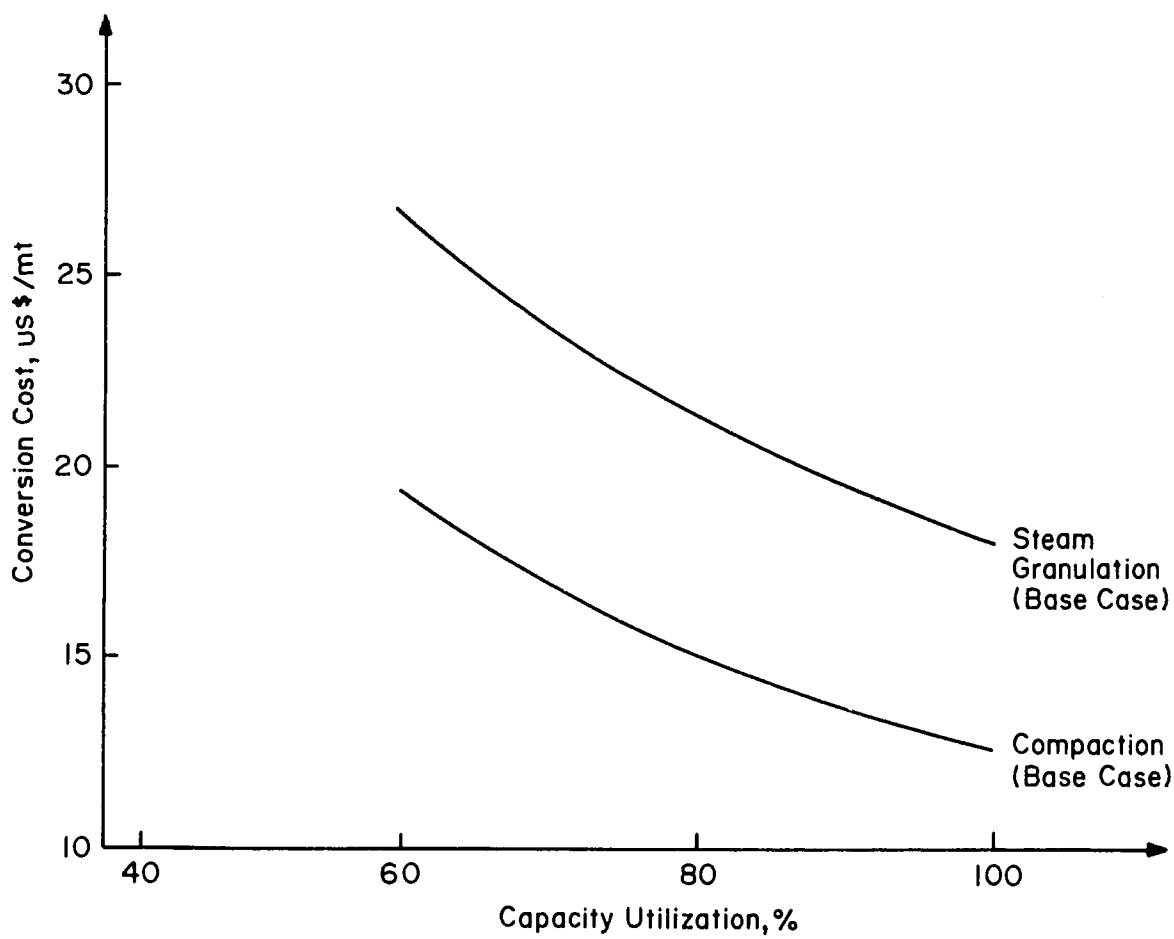

Figure 14. Conversion Cost Versus Capacity Utilization for Compaction and Steam-Granulation Processes.

higher, and that for the plant with a recycle of 1.0 is $1.1/mt or 8.9% lower.

As shown in Table 10 and Figure 14, the conversion cost for the base case (recycle ratio of 1.5) increases from $12.4/mt at 100% capacity utilization to $15.0/mt and $19.4/mt at 80% and 60% capacity utilization, respectively.

Steam-Granulation Process

Table 6 shows that the fixed investment estimates for the steam-granulation process are $7.3 million, $6.6 million, and $5.8 million for recycle ratios of 1.5, 1, and 0.5, respectively. Considering the recycle ratio of 1.0 as a base, the fixed investment estimates are $0.7 million or 10.6% higher for the plant with a recycle ratio of 1.5 and $0.8 million or 12.1% lower for the plant with a recycle ratio of 0.5.

The conversion cost estimates at 100% capacity utilization, as presented in Table 8, are $19.9/mt, $18.1/mt, and $16.2/mt for recycle ratios of 1.5, 1.0, and 0.5, respectively. Considering the recycle ratio of 1.0 as a base, the conversion cost for the plant with a recycle ratio of 1.5 is $1.8/mt or 10% higher, and that for the plant with a recycle ratio of 0.5 is $1.9/mt or 10.5% lower.

As shown in Table 10 and Figure 14, the conversion cost for the base case increases from $18.1/mt at 100% capacity utilization to $21.4/mt and $26.8/mt at 80% and 60% capacity utilization, respectively.

Compaction Process Versus Steam-Granulation Process

The comparative economics for both processes can be seen clearly on Figures 12, 13, and 14 under different recycle ratios and capacity utilizations. These figures show that the investment and conversion costs for the compaction process are lower than those for the steam-granulation process at all recycle ratios under consideration.

It is interesting to compare the economics of the two processes under the following three cases:

1. Same recycle ratio for both processes.
2. Recycle ratio of 2 (high side for the compaction process and recycle ratio of 0.5 (low side) for the steam-granulation process.
3. Recycle ratio of 1.5 (base case) for the compaction process and 1.0 (base case) for the steam-granulation process.

Same Recycle Ratio for Both Processes—For the same recycle ratio, e.g., 1.5, the fixed investment for the compaction process is about $2 million lower than that for the steam-granulation process. This differential cost varies only slightly with the recycle ratio. For the same recycle ratio, the conversion cost for the compaction process is approximately $7-$8/mt lower than that for the steam-granulation process.

Compaction Process at Recycle Ratio of 2.0 Versus Steam-Granulation Process at Recycle Ratio of 0.5—In this case, the investment cost is about the same for both processes at $5.7-$5.8 million. The conversion costs for the compaction process and steam-granulation process are $13.4/mt and $16.2/mt, respectively. The difference is $2.8/mt lower for the compaction process.

Compaction Process at Recycle Ratio of 1.5—Base Case Versus Steam-Granulation Process at Recycle Ratio of 1.0—Base Case—In this case the fixed investment for the compaction process is $5.2 million, which is $1.4 million or 27% lower as compared with $6.6 million for the steam-granulation process. The conversion costs at 100% capacity utilization are $12.4/mt and $18.1/mt, respectively, for the compaction and steam-granulation processes. Therefore, the conversion cost at 100% capacity utilization is $5.7/mt lower for the compaction process. This difference, as shown in Table 10 and Figure 14, will increase from $5.7/mt at 100% capacity utilization to $6.4/mt and $7.4/mt at 80% and 60% capacity utilization, respectively.

Conclusions

The production of granular fertilizers by the dry compaction process appears to be of more interest as energy costs increase. Fertilizer raw materials can be made into homogeneous granules without having to use water, steam, and subsequent drying of moist granules. The compaction process appears to be an attractive alternative to dry feed steam granulation, if the raw materials are compatible to the compaction process. The process is also suitable for granulation of heat-sensitive materials or for materials that are difficult to dry (for example, NPK fertilizers based on urea). The incorporation of minor or trace elements can be accomplished without difficulty.

Recent work at IFDC has shown that granular NPK fertilizers having acceptable physical properties can be produced by the compaction/granulation process from a variety of raw materials. The process is particularly suitable for formulations based on urea.

It should be noted that the limitations on raw materials discussed previously may make compaction/granulation less flexible than steam granulation. However, because granulation processes that use dry raw feed materials may be more applicable in developing countries, and the range of NPK formulations required is generally more limited in such areas, lower flexibility is not necessarily a

disadvantage. In contrast, the compaction/granulation process offers a significant advantage in that it can be readily designed for the relatively low production rates attainable with the small compaction units that are available; thus, it will be more easily adapted in a developing area.

The economic comparison of both investment and conversion costs shows that the compaction/granulation process compares very favorably with the steam-granulation process using the same dry raw materials. For all recycle ratios considered, the investment and conversion costs for compaction/granulation are lower than those for steam granulation. In the worst case at recycle ratios of 2 for compaction and 0.5 for steam granulation, the investment costs are similar, but the conversion costs are still lower for compaction, indicating a basic advantage for the compaction process.

Although the process economics have been based on a typical location in the United States, the comparison is likely to be more favorable for the compaction process in those developing countries where the energy and/or capital costs are higher than those in the United States.

It is hoped that the information presented in this bulletin will lead to the consideration of the compaction/granulation process as an alternative to steam granulation for the appropriate raw materials.

Bibliography

1. Armstrong, N. A., and F.S.S. Morton. 1977. "Effect of Granulating Agents on the Elasticity and Plasticity of Powders," *J. of Powder and Bulk Solids*, 1(1):32-35.

2. Bach, H., H. Schumann, J. Gisbier, H. Bornmann, B. Geberick, E. Linke, and H. J. Hartbrich. June 15, 1977. "Fertilizer Moldings," East German Patent 126,061.

3. Bond, A. M. June 25, 1975. "Drivable Fertilizer Spikes," British Patent 1,398,460.

4. Bond, A. M. June 19, 1975. "Fertilizer Spike," German Patent 2,362,759.

5. Boyce, J. J., and J. R. Carney. 1969. "Compaction-Granulation of Fertilizer Materials," IN *Proceedings Fertilizer Industry Round Table*, pp. 28-33, 19th Annual Meeting, Washington, D.C.

6. Braun, G. H. 1981. "Sulphate of Potash Production, Uses, and Outlook, U.S. Market," *Fertilizer International*, 147:36-37.

7. Brown, G. G. June 1967. "Process for Compacting Muriate of Potash," British Patent 1,073,682.

8. Capes, C. E. 1980. "Particle Size Enlargement," IN *Handbook of Powder Technology*, Vol. 1, pp. 97-122, J. C. Williams and T. Allen (Ed.), Elsevier, Amsterdam.

9. Clyens, S., and W. Johnson. 1977. "The Dynamic Compaction of Powdered Materials," *Mater. Sci. Eng.*,30(2):121-139.

10. Crawford, C. C. August 13, 1974. "Pulp-Bound Compacted Fuels," U.S. Patent 3,829,297.

11. Decker, H., and H. Meder. September 1972. "Pressing Fine-Grained Salt, Potassium Salt, or Similar Materials on Smoothing Rolls," German Patent 1,567,989.

12. Decker, H., and H. Meder. November 1972. "Smoothing Rolls for Compressing and Pelletizing Finely Divided Potassium and/or Rock Salt," German Patent 1,792,727.

13. Decker, H., and H. Meder. September 13, 1973. "Drum for Compressing or Molding Small Grained Potassium and Rock Salts," German Patent 1,567,974.

14. Dirdak, C. 1969. "A Hardness Test," IN *Proceedings Fertilizer Industry Round Table*, 19th Annual Meeting, Washington, D.C., pp. 33-36.

15. Dirksen, A. J. February 26, 1974. "Fertilizer Composition Containing Micronutrients," U.S. Patent 3,794,478.

16. Eaves, T., and T. M. Jones. 1973. "Packing Properties of Moist Bulk Solids," *J. Pharm. Pharmocol.*, 25(9):729-735.

17. Filippenko, E. S., S. N. Ganz, I. M. Kuzyaev, and V. P. Sidogin. 1979. "Production of Granulated Ammonium Sulphate," *Coke Chem.*, No. 11, pp. 44-47 (U.S.S.R.).

18. Herrmann, W. 1979. "Verfahren und Kosten de Agglomeration" (Methods and Costs of Agglomeration), *Chem. Ing. Tech.*, 5(4):277-282.

19. Herrmann, W., and K. Sommer. 1981. "Economical Significance and Costs of Agglomeration," Paper presented at 3rd International Symposium on Agglomeration, Nuremberg, West Germany, May 6-8, 1981.

20. Holley, C. A. 1980. "Fine Particle Processing," IN *Agglomeration - The State of the Art*, 2:1421-1441, P. Somasundaren (Ed.), AIME Inc., New York.

21. Hollstein, A. 1979. "Granulation of Potassium Sulphate," *Kali und Steinsalz*, 7(12):498-500.

22. Johanson, J. R. 1965. "A Rolling Theory for Granular Solids," *J. Applied Mechanics*, 32(E):842-848.

Previous Page Blank

23. Johanson, J. R. 1965. "Factors Affecting the Design of Roll Type Briquetting Presses," IN *Proceedings Institute for Briquetting and Agglomeration*, pp. 17-30, 9th Biennial Conference.

24. Johanson, J. R. 1969. "The Use of Laboratory Tests in the Design and Operation of Briquetting Presses," IN *Proceedings Institute for Briquetting and Agglomeration*, pp. 135-144, 11th Biennial Conference.

25. Johanson, J. R. 1973. "Predicting Limiting Roll Speeds for Briquetting Presses," IN *Proceedings Institute for Briquetting and Agglomeration*, pp. 89-99, 13th Biennial Conference.

26. Johanson, J. R. 1977. "Use of Theory for the Design and Selection of Roll Presses for Agglomeration and Compaction," IN *Agglomeration 77*, pp. 678-694, K.V.S. Sastry (Ed.), AIME, New York.

27. Johanson, J. R. 1979. "Reducing Compacting Roll Wear Through Efficient Roll Face Design and Operating Conditions," IN *Proceedings Institute for Briquetting and Agglomeration*, pp. 153-161, 16th Biennial Conference.

28. Johanson, J. R., and A. F. Banks. 1975. "Achieving Higher Production Rates Using Existing Roll Presses for Potash," IN *Proceedings Institute for Briquetting and Agglomeration*, pp. 21-31, 14th Biennial Conference.

29. Kamo, S., T. Watanabe, N. Kuroda, N. Osako, and Y. Kaneko. October 16, 1975. "Briquetted Fertilizer for Forest Fertilization," German Patent 2,515,425.

30. Kellerwessel, H. 1967. "The Dry Press Granulation of Potassium Manure Salts and Other Pressure-Plastic Salts," *Aufbereitungs-Technik*, 8(2):80-84.

31. Kellerwessel, H. 1970. "The Dry Granulation of Alkali Salts Using Large Diameter Smooth-Faced Rolls," *Canadian J. Chem. Eng.*, 48:338-340.

32. Kloeckner-Humboldt-Deutz A.-G. November 22, 1968. "Compacting of Rock Salt, Potassium Salts of Their Fine Grain Materials With a Rolling Mill," French Patent 1,546,943.

33. Kloeckner-Humboldt-Deutz A.-G. 1966. "Process for Compacting Potassium or Gem Salts Preliminary to Granulation," French Patent 1,434,584.

34. Kloeckner-Humboldt-Deutz A.-G. July 3, 1970. "Compressing and Agglomerating Potash or Mineral and/or Other Fine Grain Substances," French Patent 1,593,254.

35. Kurtz, B. E., and A. J. Barduhn. 1960. "Compaction of Granular Solids," *Chem. Eng. Progress*, 56(1):67-72.

36. Maier, S. 1977. "The Production of Compacted Fertilizers," *International Conference*, pp. 283-295, British Sulphur Corporation, Ltd., London, England.

37. Majewski, E. A., and S. Bekker. July 22, 1973. "Mixed Fertilizers," Australian Patent 432,246.

38. Masch. Koppern und Co. July 10, 1970. "Press Roller Compacting of Potassium Salts Obtained by Flotation," French Patent 2,017,824.

39. Muradov, G. S., S. B. Kapilevich, Z. I. Lineva, and L. E. Grishunina. 1981. "Mechanism of Compaction of Powdered Solids Under Pressure," *J. Applied Chemistry, U.S.S.R.*, 54(10):1964-1969.

40. Okada, J., and Y. Fukumori. 1974. "Compaction of Powders. I. Compression Under Constant Upper Punch Pressure and Behavior of Particle Filling Void," *Chem. Pharm. Bull.*, 22(3):493-499.

41. Pietsch, W. 1967. "The Agglomerative Behavior of Fine Particles," *Staub-Reinhalt, Luft*, 27(1):24-41.

42. Pietsch, W. B. 1969. "Roll Designs for Briquetting-Compacting Machines," IN *Proceedings Institute for Briquetting and Agglomeration*, pp. 145-161, 11th Biennial Conference.

43. Pietsch, W. 1970. "Improving Powders by Agglomeration," *Chem. Eng. Progress*, 66(1):31-35.

44. Pietsch, W. 1971. "Granulating of Fertilizers by Means of the Compacting/Granulating Procedure," *Aufbereitungs-Technik*, 11:684-690.

45. Pietsch, W. 1976. *Roll Pressing*, Heyden Press, London.

46. Polyakov, Y. A., Y. A. Korotkov, and E. A. Gulyakina. 1971. "Treatment of Carnallite Dust in Rotary Furnaces," *Tr., Vses. Nauch.-Issled. Proekt. Inst. Alyum.*, Magnievoi Elektrodnoi Prom., No. 79, pp. 37-42.

47. Rhees, R. C., and H. N. Hammar. May 1970. "Compaction of Potassium Sulfate," U.S. Patent 3,513,230.

48. Rieder, G., and H. Michaud. 1981. "Some Aspects of Costs Versus Efficiency in the Use of the Nitrification Inhibitor Didin®," *Fertilizer Nitrogen*, 4th International Conference on Fertilizer Technology, pp. 413. British Sulphur Corporation, Ltd., London, England.

49. Ries, H. B. 1977. "Process Engineering Aspects of Granulating Lime and Lime-Containing Fertilizers," *Aufbereitungs-Technik*, 18:633-640.

50. Rieschel, H. 1970. "The Industrial Application of Compacting," *Aufbereitungs-Technik*, 11:139-146.

51. Rieschel, H. 1971. "The Compacting Procedure During Briquetting," *Aufbereitungs-Technik*, 12:691-698.

52. Rieschel, H., and K. Zech. 1981. "Comparison of Various Test Methods for the Quality Control of Potash Granulate," *Phosphorus and Potassium*, 115, September-October, pp. 33-39.

53. Rose, D. 1971. "Roll Press Compacting of a Finely Divided Potassium Fertilizer Salt," *Freiberg. Forschungsh A.*, 501:101-114.

54. Rumpf, H. 1962. "The Strength of Granules and Agglomerates," IN *Agglomeration*, pp. 379-417, W. A. Knepper (Ed.), Interscience.

55. Shomin, I. P., P. V. Klassen, I. M. Kuvshinnikov, and T. S. Klassen. 1978. "Study of the Adhesion Properties of Mineral Fertilizers," *Zh. Prikl. Khim.*, 51(1):7-10, Leningrad.

56. Siegert, H., and H. Kellerwessel. October 15, 1970. "Compacts From Phosphate Containing Powders," German Patent 1,918,634.

57. Stahl, H. 1980. "Compacting of Fertilizers - Current State of Technology," *Aufbereitungs-Technik*, 21(10):525-533.

58. Stanley-Wood, N. G., and M. S. Shubair. 1980. "The Variation of the Surface Topography of Granules Under Compression With Degree of Binder Addition," *Powder Technology*, 25:57-64.

59. Watkins, K. R. June 28, 1974. "Less Dusty Granular Gypsum Product," U.S. Patent 3,820,970.

60. Wojcieszek, J., E. Kotula, and J. Sas. 1978. "Granulation of Multicomponent Fertilizer Mixtures by the Method of Pressing," *Przem. Chem.*, 57(2):84-87.

61. Zaikin, A. P., A. V. Ryzhov, M. F. Shitikov, and V. K. Krasovskii. 1973. "Pressing of Ammonium Chloride in Presses With Smooth Rolls," *Tr. Gos. Nauchno-Issled. Proektn. Inst. Osnovn. Khim.*, 33:18-26.

62. Zech, K. 1971. "Briquetting on Roll Presses in the Chemical Industry," *Chem. Anlagen Verfahren*, (3):56-58.

Appendix A

Steam-Granulation Process

The steam-granulation process uses the same raw materials as the compaction/granulation process and consists of the following basic steps: mixing/granulation of powdered fresh feed and recycle fines with steam and water, drying, screening, and cooling. A flow diagram of the typical process is shown in Figure 11.

The raw materials feeding system in the steam-granulation process is similar to that in the compaction process which requires an elevator, a multicompartment hopper, a weigh feeder, and a mixer/crusher prior to granulation. The fine mixed powder feed is again mixed with recycle fines from recycle conveyor in a paddle mixer. The final mixture is fed to the drum granulator where steam and water are added to facilitate granulation.

Steam is discharged under the bed of material at the feed end, and water is sprayed on the bed through spray nozzles located at two or more points along the axis. Granulation is controlled by the amount of steam and water added.

Depending on raw materials and product characteristics, the recycle-to-product ratio can vary between 0.5 and 1.5.

The material from the granulator exit has a temperature in the range of 70°-95°C. The moisture content may be between 5% and 10%, depending on product formulation. After granulation, the material is dried in a rotary dryer and then screened. The fine particles are returned to the granulator. The oversized particles are crushed and returned to the granulator. The onsize particles are cooled to 40°C and screened again. Sometimes the product is coated with a conditioning agent such as clay to prevent caking. Often a small percentage of oil is sprayed on the granules to ensure adherence of the clay.

Dust from various points in the process is collected by dry cyclones, which can be followed by wet scrubbers before the gases are discharged to the atmosphere.

In this study, it is assumed that the steam-granulation process requires both product cooling and coating.

Previous Page Blank

Appendix B

Premises and Assumptions for Investment and Conversion Cost Estimates

1. Cost estimates are for a U.S. Gulf Coast location and on a mid-1983 cost basis.
2. Plant design capacities are 20 mtph, which corresponds to 158,400 mtpy at 100% capacity utilization for 330 days/year.
3. The investment cost estimates are for an existing plant with minor additions of auxiliary and support facilities. Allowances are not included for land, raw materials, and product storage or for handling and bagging facilities.
4. Allowances are not included for working capital or for interest and escalation during construction.
5. The conversion cost estimates do not include the following:
   a. Bagging cost.
   b. Interest on working capital.
   c. Raw material and product handling costs, which are assumed to be the same for compaction and steam-granulation processes.
6. Utilities costs are based on: Electricity: $0.045/kWh
   Steam [low pressure]: $12/mt
   Fuel: $14/million kcal
7. Annual maintenance costs [material and labor] are based on 5% of fixed investment for steam-granulation process and 6% of fixed investment for compaction process.
8. Annual insurance and tax are based on 2% of fixed investment.
9. Operating labor and supervision costs are based on $240,000 and $320,000/year for the compaction process and steam-granulation process, respectively.
10. Administration and general expenses are based on 100% of operating labor and supervision.
11. Fixed capital recovery costs are based on 14.7% of the fixed capital. This is the capital recovery factor corresponding to a 12% interest rate and a 15-year period. The capital recovery covers depreciation and interest or return on investment.
12. Other premises and assumptions are discussed in the report.