931-0029
PN-AAS-858
ISN-60178

Executive Brief

THAILAND STRATEGY FOR FERTILIZER DEVELOPMENT

A PREFEASIBILITY STUDY

IFDC

Technical Bulletin—T-17
May 1980

ABSTRACT

Agriculture is a cornerstone of Thailand's economy. In recent years the cultivation of more marginal farmland, low-level use of farm inputs, and slow technological change have resulted in a decline in agricultural output and crop yields. Thailand's level of fertilizer use is among the lowest in Southeast Asia; it must be expanded to maximize crop production.

Fertilizer demand has tripled in the past decade, and a 50% increase in total nutrient demand is forecast by 1985.

Lacking a natural resource base, Thailand's fertilizer needs have been met almost entirely by imports, giving rise to a mounting drain on foreign exchange reserves.

The impending development of recently discovered natural gas reserves in the Gulf of Thailand provides an opportunity for producing nitrogen fertilizers at world competition prices. The production of nitrogen fertilizers could serve as the foundation of a domestic fertilizer industry.

How Thailand might utilize its indigenous fertilizer raw materials to facilitate domestic production of its growing fertilizer needs is the subject of this study. Alternate fertilizer production schemes which could form the basis of an overall short-term fertilizer supply strategy are outlined and discussed.

Keywords: agriculture, fertilizer, IFDC, Asia, Thailand

Executive Brief

PN-AAS-858

ISN 40274

THAILAND STRATEGY FOR FERTILIZER DEVELOPMENT

A PREFEASIBILITY STUDY

Statement

This document is an updated summary of the report, "Thailand–Strategy for Fertilizer Development," October 1979, prepared by IFDC with support from The World Bank and the Ministry of Industry, the Royal Government of Thailand. E. C. Kapusta and R. B. Diamond of IFDC and P. Onstot, World Bank consultant, were the authors.

INTERNATIONAL FERTILIZER DEVELOPMENT CENTER

TABLE OF CONTENTS

	Page
Acronyms and Abbreviations	ii
Currency Equivalents	ii
Abbreviations	iii
Weights and Measures	iii
Introduction	1
Executive Brief	3
Summary and Conclusions	4
Agricultural Overview	4
Fertilizer Demand	6
Past and Present Use	6
Projected Demand	8
Fertilizer Supply	10
Fertilizer Imports	10
Domestic Production	13
Natural Resources	15
Future Supply Strategies	17
Marketing and Distribution	22
Policy Issues	25
Fertilizer Price:Crop Price Ratio	26
Fertilizer Availability	26
Credit	26
Extension Services	27
Fertilizer Grades and Quality Control	27
Recommendations	27

ACRONYMS AND ABBREVIATIONS

ACFT . . . . . Agricultural Cooperative Federation of Thailand
ARD . . . . . Accelerated Rural Development
ARSAP . . . . . Agricultural Requisites Scheme for Asia and the Pacific
ASEAN . . . . . Association of Southeast Asia Nations
BAAC . . . . . Bank for Agriculture and Agricultural Cooperatives
BBMF . . . . . Bureau of Bangkok Municipal Fertilizer
BOI . . . . . Board of Investment
CFC . . . . . Chemical Fertilizer Company (Chemferco)
DAE . . . . . Department of Agricultural Extension
DAE/MOAC . . . . . Division of Agricultural Economics, Ministry of Agriculture and Cooperatives
DMR . . . . . Department of Mineral Resources
EGAT . . . . . Electric Generating Authority of Thailand
ESCAP . . . . . Economic and Social Commission for Asia and the Pacific
FAO . . . . . Food and Agriculture Organization of the United Nations
FRG . . . . . Federal Republic of Germany
GDP . . . . . Gross Domestic Product
GOT . . . . . Royal Government of Thailand
HYV . . . . . High-Yielding Variety
IBRD . . . . . International Bank for Reconstruction and Development (World Bank)
IFCT . . . . . Industrial Finance Corporation of Thailand
IFDC . . . . . International Fertilizer Development Center
JICA . . . . . Japan International Cooperation Agency
MOAC . . . . . Ministry of Agriculture and Cooperatives
MOF . . . . . Marketing Organization for Farmers
MOI . . . . . Ministry of Industry
NCFPID . . . . . National Committee on Fertilizer and Pesticide Industry Development
NESDB . . . . . National Economic and Social Development Board
NFO . . . . . National Fertilizer Organization
NGOT . . . . . Natural Gas Organization of Thailand
PAT . . . . . Port Authority of Thailand
PTT . . . . . Petroleum Authority of Thailand (successor to NGOT)
RID . . . . . Royal Irrigation Department
TCCC . . . . . Thai Central Chemical Company
TFITA . . . . . Thai Fertilizer Importers and Traders Association
TVA . . . . . Tennessee Valley Authority
UNDP . . . . . United Nations Development Programme
UNIDO . . . . . United Nations Industrial Development Organization
US . . . . . United States
USAID . . . . . United States Agency for International Development

CURRENCY EQUIVALENTS

US $1.00 = Baht (฿) 20.00
฿ 1.00 = US $0.05
US $1 million = ฿ 20 million
฿ 1 million = U.S. $50 thousand

ABBREVIATIONS

tpd . . . . . metric tons per day
tpy . . . . . metric tons per year
kg/ha . . . . . kilograms per hectare
ha. . . . . hectare
M. . . . . thousand = 1.0×10^3
SCF . . . . . standard cubic feet
TCF . . . . . trillion (10^{12}) cubic feet
f.o.b.. . . . . free on board
c.i.f. . . . . cost, insurance, and freight
f.a.s. . . . . free alongside
f.i.c. . . . . free in-and-out
AS . . . . . ammonium sulfate (21%)
AN . . . . . ammonium nitrate (33%)
AC . . . . . ammonium chloride (25%)
ASN . . . . . ammonium sulfate nitrate (26%)
CN . . . . . calcium nitrate (15.5%)
CC . . . . . calcium cyanamide (21%)
NH_3 . . . . . anhydrous ammonia (82%)
U . . . . . urea (46%)
SSP. . . . . single superphosphate (20% P_2O_5)
TSP . . . . . triple superphosphate (46% P_2O_5)
APS . . . . . ammonium phosphate/sulfate (16-20-0)
MAP . . . . . monoammonium phosphate (11-54-0)
DAP . . . . . diammonium phosphate (18-46-0)
NPK . . . . . multinutrient fertilizer (compound fertilizer)
NP . . . . . binary fertilizer
NK . . . . . binary fertilizer
PK . . . . . binary fertilizer
MOP . . . . . muriate of potash (60% K_2O)
KCl. . . . . potassium chloride
SOP . . . . . sulfate of potash (50% K_2O)
K_2SO_4 . . . . . potassium sulfate
RP . . . . . rock phosphate (15%-35% total P_2O_5)
MSG . . . . . monosodium glutamate
UF . . . . . urea formaldehyde

WEIGHTS AND MEASURES

1 meter (m) = 3.28 feet
1 kilometer (km) = 0.62 mile
1 hectare (ha) = 2.47 acres
1 rai = 0.16 hectare
1 kilogram (kg) = 2.2 pounds
1 metric ton (mt) = 1,000 kilograms or 2,205 pounds

INTRODUCTION

This report is an updated revision of the summary portions of a comprehensive report, "Thailand--Strategy for Fertilizer Development," dated October 1979 prepared by the International Fertilizer Development Center (IFDC) and The World Bank and with the cooperation of the National Committee on Fertilizer and Pesticide Industry Development (NCFPID) of the Ministry of Industry, the Royal Government of Thailand (GOT). The general objective of the study was to formulate a strategy for the short-term development of the Thailand fertilizer sector to better serve the fertilizer needs of Thai agriculture. This study characterizes the development of the Thai fertilizer sector in terms of past, present, and future supply and demand factors and the marketing and distribution resources involved in serving the farmers' growing need for fertilizers. The study consisted of compiling, analyzing, and evaluating existing data on these topics and where necessary generating new data required to achieve study objectives.

This summary report is divided into five principal sections: (1) agricultural overview, (2) fertilizer demand, (3) fertilizer supply, (4) fertilizer marketing and distribution, and (5) policy issues. A separate section presents recommendations for facilitating fertilizer sector development and enhancing fertilizer supply and use.

The agricultural sector overview segment describes the role of agriculture in the Thai economy. Climatic conditions, soils, land use, irrigation, and other agricultural resources of the kingdom are reviewed. Past agricultural production, in terms of planted areas and yields of principal crops, is also covered in relation to future goals.

The fertilizer demand section treats past and present fertilizer use within the context of current Thai fertilization practices and the supply and economic constraints affecting expanded fertilizer use. Fertilizer demand to the mid-1980s is projected taking into account agronomic and economic fertilizer-related factors influencing crop production and the potential for increased food crop production through more effective use of fertilizers. Consideration is also given to possible changes in some government policies which inhibit greater fertilizer use by farmers.

The fertilizer supply section identifies both past and present and external and internal sources of supply and assesses adequacy and comparative costs of supply by sources. The potential for the expanded domestic production of fertilizers based on indigenous raw materials, including natural gas, potash, and phosphate, is examined. Alternate supply strategies for the

future are presented, taking into consideration potential supplies from the ASEAN fertilizer projects.

The fertilizer marketing and distribution section describes the existing marketing and distribution system and facilities involved in moving fertilizers from primary supply points to farm-level consumers. Current and potential marketing and distribution-related constraints resulting from private-sector and government involvement are identified, and remedial actions are suggested. The marketing and distribution needs of the future are considered, and ways are suggested of facilitating the orderly marketing of the increased quantities of fertilizer which will be required in the short-term future.

The section on policy issues discusses the role of the government in defining and implementing policies which will affect the growth and development of the agricultural and fertilizer sectors.

The study is based on missions to Thailand in March 1979, December 1979, and February 1980. Participants in the study were:

Dr. E. C. Kapusta (Team Leader) Fertilizer Supply	IFDC
Dr. R. B. Diamond Fertilizer Demand	IFDC
Mr. P. O. Onstot (Consultant) Fertilizer Marketing and Distribution	World Bank
Mr. D. E. Brown	World Bank
Mr. E. B. Boerema	World Bank

A draft copy of the full October 1979 report, based on the findings of the March mission, was reviewed at IFDC Headquarters, Muscle Shoals, Alabama, during the period September 7-12, 1979, by IFDC team members and supporting staff; Dr. Aram Buranasiri, Acting Under-Secretary of State and Chairman of NCFPID; Mr. Trakarn Chairat, Secretary of NCFPID; and Mr. D. E. Brown, Industrial Projects Department, The World Bank. The review group's recommendations were incorporated into the succeeding draft. The revised summary presented here incorporates additional information derived during the December 1979 and February 1980 visits.

The study team gratefully acknowledges the support and assistance rendered by Mr. Wimon Wiriyawit, Under-Secretary of State, Ministry of Industry, and Chairman of NCFPID and the members of the National Committee. Mr. Trakarn Chairat, Chief,

Office of National Committee on Iron and Steel Industry Development, and Secretary of NCFPID and his staff are commended for their diligent efforts on the team's behalf. The time and assistance rendered by the management and staff of various government and private-sector organizations are appreciated. Thanks are also due the staff members of the Agricultural Division of ESCAP/ARSAP for the hospitality and assistance afforded the team in this effort.

EXECUTIVE BRIEF

Agriculture is a mainstay of Thailand's economy. Over 80% of its people reside in rural areas, and over 60% of its workers derive their livelihood from agricultural pursuits. The agricultural sector provides about one-third of the gross domestic product (GDP) and over two-thirds of the nation's export earnings.

The rate of growth of agricultural output, which was based on lateral expansion of cultivated area in earlier years, has slowed considerably in the past decade. Since 1970 crop yields have declined as a result of the move to more marginal land, low-level inputs, and slow technological change. Despite substantial gains in recent years, on a cultivated-area basis, fertilizer use in Thailand remains among the lowest in Southeast Asia; only about 30% of cultivated area is chemically fertilized. With the approaching exhaustion of the land frontier, greater reliance must be placed on fertilizers as a means of ensuring desired levels of crop production.

Fertilizer demand has increased threefold in the past decade; growth has been particularly strong since 1975. Apparent consumption in 1978 was estimated at 965,000 mt of product containing 168,000 mt N, 134,000 mt P_2O_5, and 37,000 mt K_2O. Based on historical and anticipated trends in the relationship between crop and fertilizer prices, expansion of irrigation, and availability of credit, 1985 nutrient consumption is forecast as 260,000 mt N, 190,000 mt P_2O_5, and 60,000 mt K_2O--an increase of 50% over total nutrient use in 1978.

Thailand relies almost entirely on imports to satisfy its fertilizer needs. Until plant shutdown in 1979, primary domestic production was restricted to a small, financially and technically beleaguered ammonia-from-lignite plant at Mae Moh. Currently, the principal domestic fertilizer facility is a large, modern fertilizer granulation plant based on imported raw materials. In 1978 fertilizer imports totaled about 846,000 mt having a c.i.f. value of 2,310 million Baht. Unless domestic production is

increased sharply, increased imports, to satisfy the anticipated near-term rise in fertilizer demand, will exacerbate the already high foreign exchange costs of imported fertilizer.

The impending commercialization of natural gas reserves in the Gulf of Thailand provides an opportunity for producing ammonia and ammonia-based nitrogen fertilizers at world competitive levels. The gas pipeline project, sponsored by Petroleum Authority of Thailand (PTT) and partially funded through The World Bank, includes a gas utilization study to evaluate industrial uses of natural gas including fertilizer production.

Based on prefeasibility level figures, the capital cost of a 1,000-mtpd ammonia/1,100-mtpd urea complex, as part of a larger facility to also produce NP and NPK fertilizers, is estimated at US $268 million (1979 cost basis), exclusive of escalation during construction. On the same basis, the additional capital investment for NP and NPK production facilities using imported phosphoric acid is estimated at about US $90-$100 million.

Based on natural gas at US $1.80/MSCF, production cost estimates indicate that ammonia production in Thailand would be economically viable compared to projected world market nitrogen fertilizer prices in the mid-1980s.

Several new NP/NPK production projects are being proposed by the private sector in Thailand. Economically viable investments in fertilizer capacity should be encouraged. However, an overall fertilizer sector development strategy is needed by GOT. Each proposal should be evaluated to ensure that the proposed projects fit into the overall fertilizer development plan for meeting the future needs of the farmers of the Kingdom. Additional work is needed to promote development of Thailand's potash resources to satisfy domestic needs and provide export earnings.

Supplies of urea from ASEAN projects, which may become available by 1983/84, can serve as an important supplement to local fertilizer nitrogen production and require consideration in developing future supply strategies.

SUMMARY AND CONCLUSIONS

Agricultural Overview

The agricultural sector is of predominant importance to Thailand's population and economy. About 83% of the population is rural, and 60% of the active population derives employment from

agriculture. Thailand's population in mid-1979 is estimated at about 46.5 million; the growth rate was 2.6%/year.

Between 1960 and 1977 the gross domestic product (GDP) of the kingdom grew at a rate of 7.6%/year while the agricultural GDP increased by 4.9%/year. Agricultural products account for 70% of total exports. Rice, maize, sugar, and cassava account for 61% of agricultural exports.

The climate varies widely, but the main agricultural areas are tropical with definite wet and dry seasons. Most of the country receives from 1,000 to 1,500 mm of rainfall during the period of April to October.

Physiographically the country consists of six regions: Central Plain, Southeast Coast, Northeast Plateau, Central Highlands, Continental Highlands, and Peninsula. Around 25% of the land area consists of poorly drained clay to loam soils developed on alluvium. Rice is the principal crop on these soils. The soils typically are acid and low in phosphate and potassium. Most rice soils in the northeast are coarser textured than those in other regions. Where sufficient water is available during the dry season, certain upland crops are grown on some of these soils.

The land area of Thailand is 321 million rai (51.4 million ha). In 1975 around 138 million rai (22 million ha) was in farm holdings, and 91 million rai (14.6 million ha) was cultivated. Land in farm holdings increased by 4.5%/year between 1962 and 1973. One goal of the Fourth National Economic and Social Development Plan (1977-81) is to decrease the rate of expansion onto marginal land by intensifying cropping on present holdings. About 4.6 million families (about 50% of total families) reside on farms, and 77% of the holdings are fully owned. Around 30% of holdings are less than 15 rai and comprise 8% of the total land area in holdings; about 39% of holdings are more than 30 rai and comprise 71% of the land. Average net cash farm income increased from 3,531 Baht (US $177) in 1970 to 9,494 Baht (US $475) in 1975.

Agricultural research is conducted on over 100 research stations and experimental fields primarily under the Department of Agricultural Technique, MOAC. Universities, regional agricultural centers, tobacco monopoly, and other organizations also conduct research.

Fertilizer recommendations recently have been revised and take into consideration general soil conditions. Fertilizer trials show responses in the range of 10 kg of rice per kilogram of nutrient and some responses as high as 16 kg of rice per kilogram of nutrient. With the 1978 relative prices (rice at 2.5 Baht/kg and nutrients at 12 Baht/kg), the farmers would

receive 2.0-3.3 Baht of rice for each Baht invested in fertilizer nutrients. Maize, cotton, kenaf, and cassava are reported to show responses of 30%-100% to recommended rates of nutrient application. Prices for crops, except cassava, have doubled between 1968 and 1978. Prices for fertilizer and other inputs have also increased by comparable or greater amounts during this period.

Fertilizer Demand

Past and Present Use

Apparent consumption of fertilizer increased from 291,000 to 965,000 mt between 1968 and 1978.[1] The growth in consumption was somewhat stepwise through 1975 and then increased annually through 1978. Average nutrient concentration has remained near 35% since 1968. Apparent consumption of nutrients grew from 103,000 mt in 1968 to 339,000 mt in 1978. During this period N increased from 48,000 to 168,000 mt, P_2O_5 from 39,000 to 134,000 mt, and K_2O from 16,000 to 37,000 mt (Figure 1).

Little fertilizer is used as straight P or K products. The principal groups of products used are N, NP, and NPK fertilizers. The percentage growth and portion of total use of these product groups in 1978 were similar to those in 1968. However, there were differences within this time period. In 1978 N, NP, and NPK product groups supplied 25%, 44%, and 30% of fertilizers consumed and 17%, 47%, and 35% of total nutrients. In 1978 N products supplied about 34%, NP products 43%, and NPK products 23% of the N consumed. NP products supplied 66%, and NPK products supplied 34% of the P_2O_5. About 95% of K_2O is consumed as NPK fertilizers.

Regional consumption estimates have been made by DAE/MOAC on the basis of dealer surveys. Those data indicate that the Central Region (including the lower Northern Region)

1. Apparent fertilizer consumption was derived from carryover stocks at the beginning of the year, local basic production, imports, industrial use, and carryover stocks at the end of each year. Data sources were found to be inaccurate and incomplete in many instances. Thus, rationalization was used often, and private sources were relied upon greatly for data covering the years of 1976-78.

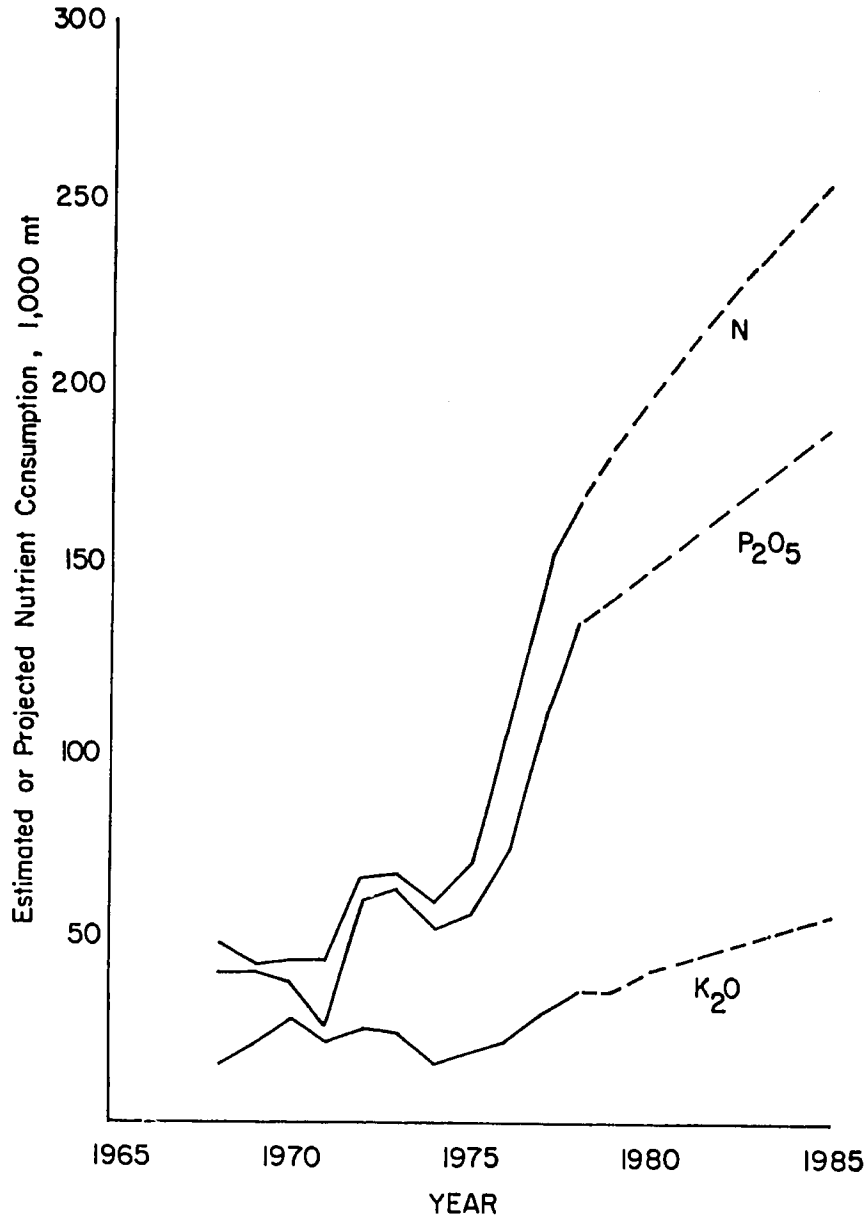

Figure 1. Estimated and Projected Nutrient Consumption in Thailand, 1968-85.

consumes approximately 64% of the fertilizer; the Northeastern Region, 21%; the Southern Region, 9%; and the upper Northern Region, 6%. In 1976 this would have resulted in average fertilizer application rates of 10.0, 5.6. 4.3, and 4.0 kg/rai of planted area in the Central, upper Northern, Southern, and Northeastern Regions, respectively.

DAE/MOAC estimated that 47% of all fertilizer was applied for rice in 1976, 33% for upland crops, 13% for tree and fruit crops, and 7% for vegetables. Since 1969 the portion of total fertilizer use for rice and vegetables declined while the portion for upland, tree, fruit, and flower crops increased. In the upper north around 75% of all fertilizer is used for upland crops and 18% for rice. This is practically reversed in the northeast. In the south about 64% is used for tree crops and 26% for rice. In the central plus lower north around 43% is used for rice and 38% for upland crops.

On the basis of estimating the consumption of major fertilizer grades and their use for specific crops during 1976-78, the study team estimated that around 50% of fertilizer is used for rice, 20% for sugarcane, 4% for rubber, and 2% for tobacco. That is, 76% of the fertilizer is used on those four crops. In 1978 this resulted in an average of around 8.8 kg/rai of fertilizer used for rice, and it supplied 1.7, 1.7, and 0.06 kg of N, P_2O_5 and K_2O/rai, respectively. An average of 55 kg/rai of fertilizer was used for sugarcane and supplied 10.7, 1.0, and 1.7 kg/rai of N, P_2O_5, and K_2O, respectively.

Historically, the principal N product has been ammonium sulfate (AS), and this material still dominates. However, in 1978, 18% of the N consumed as N products was as urea. The major NP product is 16-20-0, but 18-24-0 has grown in importance. The largest quantity of NPK fertilizer consumed has an approximate ratio of 2:2:3 and primarily consists of 13-13-21. Rubber grades and 1:1:1 fertilizers have followed in importance. In 1978 TCCC introduced an NPK rice fertilizer (16-20-6), and apparent consumption was second behind the 2:2:3 ratio fertilizers.

Projected Demand

Future nutrient consumption was estimated on the basis of projections using regression models which fit historical data (1968-78). The models were ln and linear functions of the following forms:

$$\ln Y = a + b \ln I + c \ln C + d \ln P \text{ and}$$
$$Y = a + b I + c C + d P$$

where Y is nutrient (N, P_2O_5, or K_2O) consumption in metric tons, I is irrigable area in 1,000 rai, C is total institutionally available credit for agriculture in million Baht, and P is the weighted nutrient-to-crop price ratio. Only rice, sugarcane, rubber, and tobacco prices were used to determine the weighted crop prices. Average weighted nutrient prices were determined on the basis of all nutrients being used as 21-0-0, 16-20-0, and 13-13-21.

For the projections, values for irrigable area through 1985 were supplied by the Royal Irrigation Department, agricultural credit was assumed to increase by 2 million Baht/year, and the weighted nutrient-to-crop price ratio was assumed to remain at 9 (approximately equal to the 1978 value). Using those assumptions the estimated nutrient demand in 1985 is:

ln function--N = 256,000; P_2O_5 = 188,000; and K_2O = 57,000 mt

linear function--N = 290,000; P_2O_5 = 218,000; and K_2O = 62,000 mt

For fertilizer supply planning purposes the study team used figures of N = 260,000, P_2O_5 = 190,000, and K_2O = 60,000 mt. These are rounded figures which are near the more conservative estimates provided by the ln function. The effects upon demand of varying levels of available credit and price ratios are explored in the report. Elasticities of demand for N show 0.9% increase in N demand for a 1% decrease in nutrient-to-crop price ratio. Credit and irrigable area each have about one-half the effect as price ratio but with a positive effect. Price ratios and credit have a similar effect on P_2O_5 demand as on N demand while effect of irrigable land use on P_2O_5 demand is about one-half as great as on N demand. The most significant effect on K_2O demand is from irrigable land area; 1% increase in irrigable land area will increase consumption by 1.4%. With further improvement in the weighted nutrient/crop price ratio to 8 (10% below the 1978 level), the 1985 fertilizer consumption is estimated to be about N = 284,000, P_2O_5 = 210,000, K_2O = 56,000 mt. Obviously, with incomplete data, weak extension work, and the past physical limitations on fertilizer imports, it is difficult to make precise projections. It is possible that, with increased availability and promotion of urea, total nitrogen consumption in Thailand could well exceed the above estimates.

For purposes of planning production facilities the suitability of various forms of fertilizer was explored. It was determined that for most agricultural conditions in Thailand fertilizers based upon urea, MAP-DAP, and KCl would be desirable. Ammonium chloride (AC) as a straight N fertilizer or a component in NP and NPK fertilizers would be suitable for much of Thailand. However, the use of AC-containing fertilizers on poorly drained soils of the northeast because of possible contribution to increasing saline conditions which are already a problem on some soils is cautioned. In addition, fertilizer-containing chloride is <u>not</u> suitable for tobacco and pineapple fertilization. Additional plant nutrition and soil fertility research should be conducted with sugarcane and fruit crops to determine possible effects of AC on crop quality. The importance of sulfur fertilization is not defined in Thailand, but it is expected that sulfur fertilization, particularly on sandy

soils, will become important in the future if AS is eliminated as the primary N fertilizer. S may be supplied in the fertilizers which are proposed in the alternative supply schemes when soil fertility research shows it is desirable. The possible need for lime should be continually monitored.

The possible types of fertilizers which may be consumed by 1985 were estimated to guide the selection of alternative production facilities. It was assumed that the average ratio of nutrients in NPK fertilizers will be $N:P_2O_5:K_2O$ = 7:8:6 and that all K_2O will be consumed in these fertilizers. Thus, NPK fertilizers will supply 70,000, 80,000, and 60,000 mt of N, P_2O_5, and K_2O, respectively. In addition, it is assumed that NP products will supply the remaining P_2O_5 and that the NP products will have an average ratio of $N:P_2O_5$ = 3:4. Then, NP fertilizers will furnish 82,500 mt of N and 110,000 mt of P_2O_5. This leaves 107,500 mt of N to be consumed as straight N products, either as urea and/or ammonium sulfate or chloride.

Fertilizer Supply

Fertilizer statistics in Thailand are incomplete and often inaccurate. Accordingly, the study team found it necessary to rationalize data from several sources. The manner in which import data are published by the Department of Customs does not permit the determination of nutrient content of fertilizer imports. Private source import data were used to develop imports by product type and nutrient content. Data from several private sources were also inconsistent, necessitating rationalization.

Fertilizer Imports

Thailand relies almost entirely on imports to satisfy its fertilizer demand. In 1978 imports accounted for 98% of nutrient supply. Following an erratic growth pattern, imports increased from about 141,000 to 846,000 product mt from 1966 to 1978; corresponding total nutrient content rose from 48,000 to 322,000 mt. During the period 1966-78 domestic production varied between 20,000 and 49,000 mt and in 1978 totaled 38,000 mt with a nutrient content of about 7,200 mt. Total supply from imports and domestic production increased from about 162,000 to 884,000 product mt or from 49,000 to 329,000 nutrient mt from 1966 to 1978 (Table 1).

Imports grew substantially from about 466,000 mt in 1975 to a record level of about 952,000 mt in 1977, declining to 846,000 mt in 1978. Nutrient content gains were equally impressive--

Table 1. Thailand Fertilizer Supply, 1966-78

Year	Product: Imports	Product: Domestic Production	Product: Total	Combined Nutrient Content: N	Combined Nutrient Content: P_2O_5	Combined Nutrient Content: K_2O	Combined Nutrient Content: Total
	-mt-						
1966	141,428	20,275	161,703	25,217	16,235	7,748	49,200
1967	218,244	36,187	254,431	45,247	28,056	13,152	86,455
1968	265,686	28,635	294,321	49,285	39,010	15,652	103,947
1969	265,830	20,049	285,879	44,623	41,480	20,272	106,375
1970	249,641	43,522	293,163	46,360	37,741	27,990	112,091
1971	226,544	39,568	266,112	47,477	26,933	21,728	96,138
1972	383,303	40,762	424,065	69,452	60,436	25,277	155,165
1973	398,863	34,351	433,214	71,175	52,870	23,732	147,777
1974	342,934	44,804	387,738	63,747	52,746	17,433	133,926
1975	465,958	34,695	500,653	90,723	66,795	22,457	179,975
1976	679,484	48,192	727,676	136,318	86,828	24,277	247,423
1977	952,476	49,211	1,001,687	181,480	135,254	37,080	353,814
1978	846,366	37,558	883,924	163,871	129,073	36,083	329,027

Source: Imports: Data for 1966-71, Thailand National Fertilizer Study, British Sulphur Corporation, October 1972; data for 1972-75 based on Customs Department data in Marketing, Distribution, and Use of Fertilizers in Thailand, ARSAP, July 1978; data for 1976-78 from Customs Department annual reports and private communications.

Production: Chemical Fertilizer Corporation, private communications, and Bureau of Bangkok Municipal Fertilizer.

174,000 mt to 321,000 mt for 1975 and 1978, respectively. In 1978 nutrient content of imports was estimated at 158,000 mt N; 128,000 mt P_2O_5, and 36,000 mt K_2O.

Fertilizers are imported in the form of single (N, P_2O_5, and K_2O), binary (mainly NP), and ternary (NPK) element materials. The single nutrient and NP materials are sold for direct application and are used by local granulators as raw materials in making other NP and/or NPK formulas. In 1978 single element materials, NP, and NPK represented about 43%, 38%, and 19%, respectively, of total identified imports.

Nitrogen products accounted for about 93% of imports of straight materials in 1978; phosphate and potash represented about 1% and 6%, respectively. Principal nitrogen materials were AS and AC, representing 66% and 22% of total nitrogen imports.

Urea was a distant third at about 10%. Imports of AC, used mainly in making granulated NP fertilizers, increased substantially since 1975 following construction of the Thai Central Chemical Company (TCCC) granulation plant. Triple superphosphate and muriate of potash are the principal single-element phosphate and potash imports.

NP products imported for sale as direct application materials represented about 63% of total NP imports in 1978. The major grade was 16-20-0 which represented about 42% of all imported NP products and 66% of NP products imported for direct sale. The next most important NP import for direct sale, 20-20-0, accounted for about 25% of that import category. NP products imported for use as raw materials in granulated fertilizers represented 37% of total 1978 NP imports. Diammonium phosphate (18-46-0) and monoammonium phosphate (11-55-0) were the major grades; both were imported in nearly equal quantities. Imports of those materials have grown with the expansion of the TCCC granulation operation.

The most important NPK grades are 13-13-21, 12-12-17, and 14-14-21. In 1978 these grades represented 37% of total NPK imports. The 15-15-15 and other 1:1:1 ratio grades accounted for 12% and the rubber grades, 18-11-15 and 11-18-4, for 12% of NPK imports.

The cost of increased fertilizer imports continues to rise rapidly. During the past decade, the c.i.f. value of fertilizer imports has increased 600% to approximately 2,300 million Baht (US $115 million) in 1978. NP and NPK grades account for about 67% and nitrogen about 30% of this total. In 1978 the average c.i.f. value/ton of all fertilizers was 2,752 Baht (US $138). Prices of 1978 fertilizer imports were up significantly from those of the previous year.

The United States (U.S.), Japan, and Federal Republic of Germany (FRG) have been and continue to be Thailand's principal fertilizer suppliers. In 1978 they collectively supplied 68% of Thailand's imports. In the past few years the role of established West European suppliers has diminished in the face of growing imports from Scandanavia, East Europe, the Arabian Gulf States, and Asia. The United States is the major supplier of NP materials with a 66% share of the 1978 market. Japan is the dominant supplier of nitrogen products accounting for all of the AC and over one-third of the AS. FRG is an important supplier of AS, potash, and NPK grades. Imports of NPK products from Norway have grown, and Romania has emerged as a significant source of NP materials. Urea imports emanate mainly from Korea, the Persian Gulf, Japan, and Indonesia.

Fertilizers are imported into Thailand by the private and public sectors. In 1978 private traders and granulators handled about 92% of total imports. Private-sector importers are divided into two highly competitive groups--Metro Company, Ltd., and its associated companies which include TCCC and 25 traders which constitute the membership of the Thai Fertilizer Importers and Traders Association (TFITA). In 1978 the Metro Company group handled an estimated 50% of total imports; TFITA, about 42%; and the public sector, represented mainly by The Marketing Organization for Farmers (MOF) and the Agricultural Cooperative Federation of Thailand (ACFT), the remaining 8%. MOF and ACFT also purchase from other importers; MOF supplies part of ACFT's requirements. Imports are heaviest during the May-September period, the main period of fertilizer demand.

Nearly all of Thailand's fertilizer imports enter through the Port of Bangkok on the Chao Phraya River. Vessel size is limited by river draft and ship-turning radius. Incoming fertilizer cargos generally range from 5,000 to 15,000 mt. Cargos of large vessels unable to traverse the bar channel at the port entrance are off-loaded into smaller vessels for transshipment to public and private wharves. The TCCC dock can handle two 20,000-ton vessels at the same time. About 90% of the fertilizer imports are received in bulk form. Most fertilizer importers rent warehouse space ranging from 10,000 to 100,000 mt. The Khlong Toei wharf, operated by the Port Authority of Thailand (PAT), is approaching the point of maximum utilization. Little room is available for expansion. Fertilizer shipments into the Port of Sattahip, formerly operated by the Royal Thai Navy but recently put under the control of PAT, started in late 1978. About 40,000 mt was handled in late 1978. Plans call for an expansion of commercial traffic at the port.

Domestic Production

Thailand's fertilizer production capability consists of a small government-operated nitrogen fertilizer complex at Mae Moh, shut down in 1979; the inactivated Bureau of Bangkok Municipal Fertilizer (BBMF) composting plant in Bangkok; and one large and five small fertilizer granulation plants located in the vicinity of Bangkok. Additionally, small quantities of phosphate rock are produced mainly in the northern and southern regions.

The Chemical Fertilizer Company (CFC) plant at Mae Moh, built in 1966, produced urea and AS from ammonia which was made from locally occurring lignite. Throughout its history, the plant had been plagued by numerous technical problems which seriously impaired output. From 1970 to 1978 production averaged about 30% of design capacity. In 1978 the complex yielded about 9,300 mt of ammonia, 3,600 mt of urea, and 22,000 mt of AS.

The financial performance of the complex was equally poor with production costs exceeding market prices. The plant when visited in March 1979 was in a state of disrepair and in need of a major renovation. A recent report by a Japanese team presented a comprehensive treatment of plant problems and recommended solutions and included a proposed rehabilitation program. From a purely economic viewpoint continued operation could not be justified and, as noted earlier, the plant has since been shut down.

Limited local production of phosphate rock provides the only other contribution to domestic fertilizer supply. Fragmentary data indicate that 1978 production, from three locations, was about 5,500 mt containing about 700 mt of citrate-soluble P_2O_5. The largest producer, inactive in 1978, resumed operations in 1979 at a stated production rate of about 12,000 tpy. The latter mine is located in Lamphoon province; the others are in the south.

Thailand's current fertilizer granulation capacity is estimated at about 385,000 mt. TCCC, the major granulator, has a reported capacity of 360,000 mt; five small granulators account for the remainder. The TCCC plant employs a basic pugmill agglomeration process. The principal NP grades (16-20-0, 18-22-0, 18-24-0) accounted for about 60% of 1978 production of 290,000 mt. About 53,000 mt of 16-20-6, 18-22-6, and 18-24-6 was produced in 1978. Other important grades include 12-10-18, 13-13-21, and 15-15-15. The plant is in excellent condition, is well operated, and produces high-quality products. Sales in 1978 reportedly totaled about 293,000 mt. Production from other granulation plants, the BBMF unit, and numerous small liquid fertilizer plants was about 30,000 mt in 1978.

Carryover stocks have become an increasingly important element of fertilizer supply in recent years. Reliable data on carryover stocks could not be obtained from public- and private-sector contacts despite aggressive attempts. Based on fragmentary information, beginning calendar year stocks were estimated to be approximately 400,000 mt in 1978 and 340,000 mt in 1979. Lack of hard data on carryover stocks limits the degree of reliability of calculated apparent consumption estimates.

Large quantities of imported and domestically produced urea are used for industrial purposes, mainly in the manufacture of monosodium glutamate (MSG) and urea formaldehyde (UF) resins as plywood adhesives. An estimated 15,400 mt of urea was used industrially in 1978--about 10,700 mt in MSG and 4,200 mt in UF applications.

Government bans or controls on the import of urea and AS, first instituted in 1968 to protect the trouble-plagued CFC operation and subsequently modified and finally withdrawn in

1974, had a disruptive effect on the development of the Thai fertilizer sector and generally worked against the best interests of farmers.

These restrictive policies on nitrogen fertilizer imports inhibited the natural development of fertilizer use practices by limiting the availability of certain nitrogen products or making them too costly, thereby impeding their use. Import strategies devised by importers to counteract government import controls on nitrogen fertilizers first shifted to the importation of non-banned nitrogen fertilizers and later to the importation of mixed fertilizers of higher nitrogen content. Changes in import strategies affected product availability and influenced farmer fertilizer use habits.

Although short lived, a 20% surcharge on mixed fertilizers enacted by the government in January 1978 and revoked in April 1978 seemingly served no useful purpose. The tariff imposed to protect TCCC from the alleged dumping practices of foreign suppliers disrupted import supply patterns and led to increased farmer prices despite a price control feature in the act. Mounting criticism by the private sector and fear of a fertilizer shortage in the main spring planting season led to its revocation.

Natural Resources

Recent discoveries of natural gas in the Gulf of Thailand offer the potential for production of ammonia on a competitive basis with other world producers. Proved and probable reserves of two locations are estimated at up to 7.6 TCF. The Union Oil Company reserve has been estimated at about 1.8 TCF. Estimates of the Texas Pacific field indicate a proved reserve of 1.0 TCF with probable reserves up to 4.5 TCF.

A wellhead purchase price of about $1.40/million Btu has been negotiated with Union Oil. Based on May 1980 conditions the Thai government would realize about $0.50/million Btu in the form of royalties, taxes, and profit sharing. The price agreement includes provisions for escalation. The purchase price from Texas Pacific is under negotiation.

Preliminary designs have been prepared for proposed offshore and onshore pipeline routes. A 34-inch diameter offshore line with a capacity of 700 MSCF/day will transport gas about 425 km from the Union Oil reserve to a gas terminal near Sattahip. A 28-inch diameter onshore leg, about 160 km in length, will link supply to power plants at Bang Pakong and South Bangkok. The pipeline serving Union Oil is scheduled to be completed in mid-1981. The proposed natural gas delivery schedule calls for 200 MSCF/day from Union Oil in 1982, rising to

250 million/day in 1983. Contributions to supply from Texas Pacific are anticipated beginning in 1984.

The capital cost of the pipeline from the Union Oil production platform to South Bangkok is estimated at US $514 million. Inclusion of the pipeline connection to the Texas Pacific reserves raises the capital cost to about $750 million.

For the first few years virtually all of the gas is slated for use in power generation by the Electric Generating Authority of Thailand (EGAT) at a minimum sales price of $1.90/million Btu (1978 price level), with an additional escalation formula based on world oil prices.

The lack of known reserves of phosphate rock precludes the establishment of a basic phosphate industry. Most known deposits are of the guano type, small in size and widely dispersed. The Department of Minerals Resources estimates reserves at about 170,000 mt.

The potential for potash production is encouraging, but considerable time and money will have to be expended in delineating and developing economically viable commercial potash reserves. Potash market opportunities in Southeast Asia are excellent, and the development of a commercially competitive potash operation could be of major benefit to the Thailand economy. Extensive deposits of carnallite ($KCl \cdot MgCl_2 \cdot 6H_2O$) and more limited occurrences of sylvinite ($KCl \cdot NaCl$) have been discovered in northeast Thailand. Ninety-six test holes have been drilled in the search for potash and salt supplies for the proposed ASEAN soda ash plant.

Carnallite is the principal potash mineral found in this area; 51 holes showed carnallite occurrences over large areas at depths of 90-600 m with bed thicknesses up to 120 m. Further drilling in the Bamnet Narong area has confirmed a minimum of 25 million mt K_2O as carnallite at a depth of about 120-150 m.

Sylvinite, usually the preferred potash raw material because of its generally higher K_2O content and comparative ease of extraction and beneficiation, has been found in nine test holes--two in the Sakon Nakhon and seven in the Khorat Basin. The two sylvinite showings in the former are widely spaced and deeper than the carnallite deposits. The most promising core section was found in the Wanon Niwat district. It was 19 m thick and averaged 28% K_2O at a depth of about 480 m. Other drill tests indicated sylvinite containing 17%-24% K_2O at depths of about 120-140 m. Although sylvinite occurrences of potential economical value have been identified in widely spaced drill holes, additional drilling tests will be required to determine the presence of a commercially viable reserve. The Ministry of Industry is

evaluating a private-sector proposal to explore for and develop sylvinite deposits.

The earliest date by which a potash operation could be established would be the mid-1980s. Based on current estimates of Carlsbad (United States) and Saskatchewan (Canada) facilities, a sylvinite-based potash mine and refinery to produce 1 million product tpy would cost about $200 million or more, exclusive of infrastructure costs. The search for and development of sylvinite and carnallite reserves should receive top priority.

Future Supply Strategies

Thailand possesses adequate reserves of natural gas to produce ammonia for upgrading into N, NP, and NPK fertilizers. The near term (1985) annual domestic demand of 260,000 mt N is sufficient to warrant the construction of a modern nitrogen fertilizer complex based on an ammonia unit of about 1,000-1,200 tpd depending on the quantity of nitrogen derived from external sources.

The ammonia plant could provide ammonia to the proposed ASEAN soda ash plant and serve as the basis for a newly constructed fertilizer facility to manufacture finished N, NP, and NPK fertilizers and intermediates for shipment to the present TCCC plant for use in making granulated NPK grades. Ammonium chloride from the soda ash plant would be sold in part for direct application and the remainder shipped to the TCCC plant for processing into NPK grades.

Many domestic production possibilities present themselves depending on the role of the private sector, the scope of the proposed ASEAN soda ash project, the production or use of purchased phosphoric acid, and the level of nitrogen imports from ASEAN nitrogen projects.

This range of possibilities is illustrated by four production schemes which could be followed to provide the types and quantities of N, NP, and NPK fertilizers required to satisfy 1985 market demand for N, P_2O_5, and K_2O. The schemes are diagrammed in Figure 2. Product flows and plant capacities are indicated.

In three of the proposed schemes (A, B, and C), nitrogen demand is totally derived from a 1,200-tpd ammonia plant. In the fourth scheme (D), domestic nitrogen production, based on a 1,000-tpd ammonia plant, is supplemented by urea imports from ASEAN projects. In two schemes (A and C), the phosphate requirement is obtained from imported phosphate rock which is processed into phosphoric acid using sulfuric acid made from

imported sulfur. In one scheme (B), the needed phosphate is derived from imported phosphoric acid. In each scheme, potash would be imported; domestic potash could be used when supplies become available.

In scheme A, ammonia plant output is used to produce (1) ammonium chloride (AC) at the proposed ASEAN soda ash plant, (2) urea, (3) granulated NP and NPK fertilizers using a conventional urea-ammonium phosphate (UAP) granulation process, and (4) monoammonium phosphate. Phosphoric acid is produced from imported phosphate rock and sulfur. Portions of the ammonium chloride and urea and all of the monoammonium phosphate would be shipped to the TCCC granulation plant for use in making granulated NP and NPK products. Scheme B resembles scheme A except purchased phosphoric acid is used to supply the P_2O_5 for NP and NPK manufacture. In scheme C, which is basically similar to scheme A, it is assumed that no ammonia goes into AC production; instead, the equivalent quantity of ammonia is used to make additional urea for direct fertilizer use and for use in NPK manufacture. Scheme D consists solely of an ammonia/urea complex. Ammonia would be directed to (1) the soda ash plant to produce ammonium chloride which would be sold for direct application and used by private-sector granulators in NP and NPK manufacture, (2) sales to private-sector granulators for use in NP and NPK production, (3) sales to industrial users, and (4) the manufacture of urea for direct application, for use in NP and NPK manufacture, and for sale to industrial users.

Types and quantities of products to be made in schemes A, B, C, and D, together with estimates of capital investment and production cost by production unit, are summarized in Tables 2 and 3. The estimated capital cost requirements range from a low of $268 million for scheme D to $515 million for scheme C. Capital investment is reduced substantially by using purchased phosphoric acid rather than producing it as evidenced from a comparison of schemes A and B.

Estimated cost of production of ammonia, based on natural gas at $1.80/MSCF,[2] exclusive of return on investment (ROI), varies from about $132/mt for schemes A, B, and C to $137/mt for scheme D which requires the smaller (1,000-tpd) ammonia

2. The economic value of gas depends on production costs, whether a surplus is available, and on world market petroleum and/or coal prices (for substitute fuel or electricity generation). Any consideration of gas use should evaluate these points in detail, at the time of preparing a detailed project feasibility report. At present, the economic value of gas in Thailand is estimated in the range of US $3-$4/million Btu depending on the level of reserves.

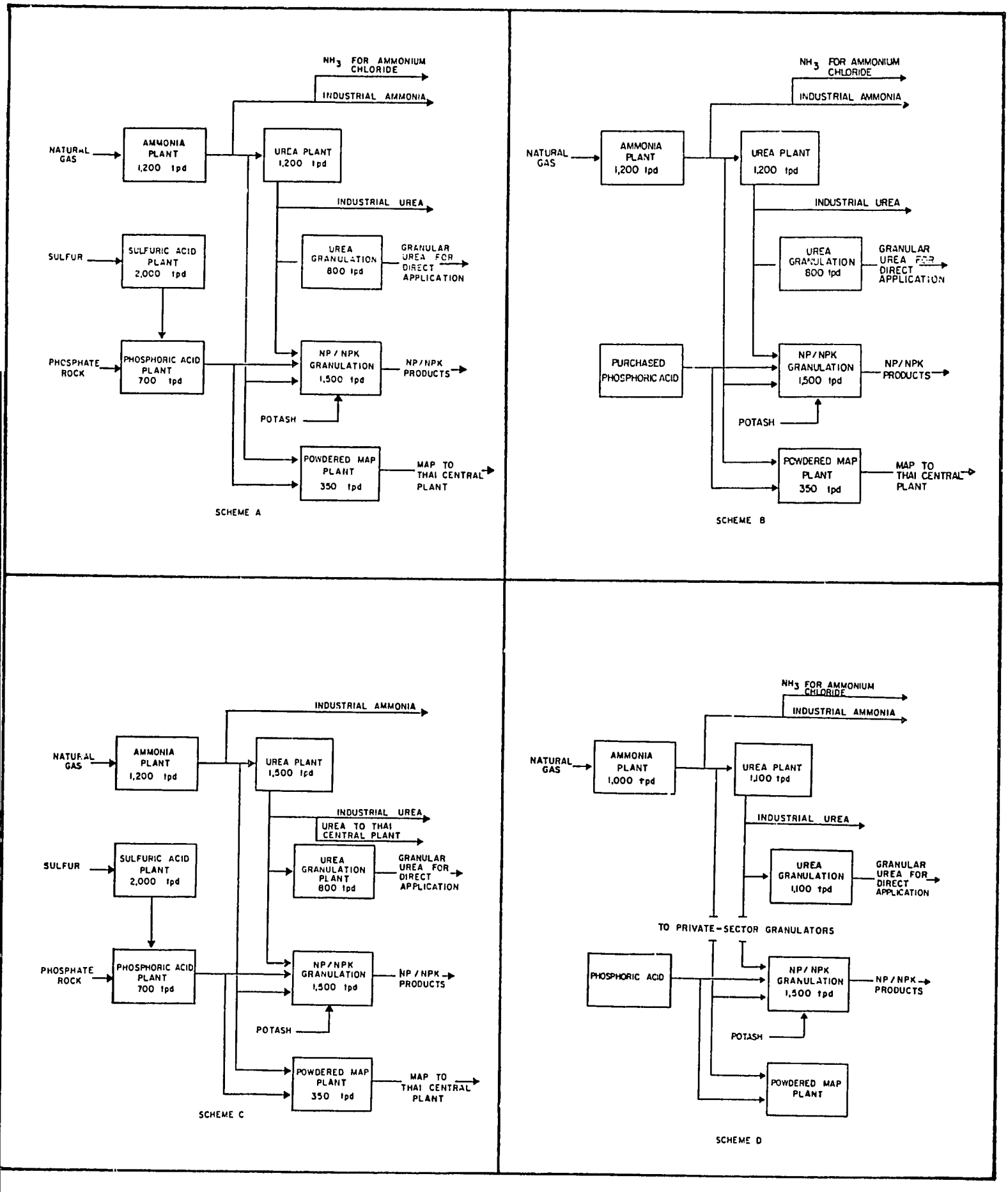

Figure 2. Production Scheme Diagrams.

Table 2. Capital Investment Estimate Summary, 1979 Cost Basis
(Excluding escalation during construction)

Plant	Scheme	Capacity, tpd	Investment Estimate, US $ Million		
			Fixed	Working	Total
Ammonia	A, B, & C	1,200	191	5	196
	D	1,000	170	5	175
Urea (crystalline)	A & B	1,200	61	3	64
	C	1,500	70	4	74
Urea granulation	A, B, & C	800	21	7	28
Urea (granules or prills)	D	1,100	83	10	93
Sulfuric/phosphoric	A & C	700	117	8	125
Powdered MAP	A & C	350	6	4	10
	B	350	6	6	12
NP/NPK granulation	A & C	1,500	59	23	82
	B	1,500	59	29	88
Total investments:					
Scheme A			455	50	505
Scheme B			338	50	388
Scheme C			464	51	515
Scheme D			253	15	268

Source: Taken from the Addendum to the October 1979 report.

plant. Including a 10% ROI raises respective production costs to $187 and $196/mt. For granular, bagged urea, estimated production costs, exclusive of ROI, range from about $182 to $185/mt for schemes A, B, and C to about $172/mt for scheme D. The estimated cost of imported and domestically produced phosphoric acid is virtually identical. A comparison of the cost of domestically produced ammonia and urea (bulk), exclusive of interest charges, favors the domestically produced products by about $40 and $15/mt, respectively, depending on which production scheme is followed.

More detailed feasibility studies may indicate wider disparities among the supply schemes described above. Also, the reader is invited to review the October 1979 report for a more detailed description of the supply schemes and associated economics.

Table 3. Production Cost Summary, 1979 Cost Basis, US $1.80/M Btu Gas Price

Plant	Product	Scheme	Production Cost, US $/mt[a] Variable	Fixed	Total	10% ROI[b] US $/mt	Total Cost, US $/mt
Ammonia	Anhydrous NH_3	A, B, & C	66.90	64.55	131.45	55.06	186.51
		D	66.90	70.19	137.09	58.92	196.01
Urea	Crystals--bulk	A & B	119.73	21.65	141.38	17.98	159.36
		C	119.73	19.91	139.64	16.59	156.23
Urea granulation	Granules--bagged	A & B	171.41	13.26	184.67	11.76	196.43
		C	168.28	13.26	181.54	11.76	193.30
Urea	Granules or prills--bagged	D	137.29	35.04	172.33	28.44	200.77
Sulfuric/phosphoric	40% P_2O_5 acid as P_2O_5	A & C	318.66	71.74	390.40	60.10	450.50
Powdered MAP	12-52-0 bulk	A & C	269.64	8.29	277.93	9.62	287.55
		B	269.38	8.29	277.67	11.54	289.21
NP/NPK granulation	NP (25-34-0)--bagged	A	245.15	18.02	263.17	18.39	281.56
		B	244.97	18.02	262.99	19.73	282.72
		C	244.30	18.02	262.32	18.39	280.71
	NPK (22-29-7)--bagged	A	228.13	18.02	246.15	18.39	264.54
		B	227.98	18.02	246.00	19.73	265.73
		C	227.39	18.02	245.41	18.39	263.80

a. Excluding interest and/or return on investment (ROI).
b. 10% return on total capital, 1979 cost basis, including interest during construction and working capital, but excluding escalation during construction.

Source: Taken from the Addendum to the October 1979 report.

Consideration of domestic production must be evaluated in terms of other supply options available to Thailand, namely imports of urea from ASEAN sources and imports from elsewhere through normal marketing arrangements. These considerations should include economic return, local value added, foreign exchange savings, availability of capital and foreign exchange, and the likely continued rise in world nitrogen fertilizer prices that are generally linked with petroleum prices. The role, particularly quantity and price level, of urea from ASEAN sources should be defined prior to making a major investment decision in Thailand. It is assumed here that the ASEAN projects (regardless of their specific input costs) will market urea at approximately world market prices and that each ASEAN partner would have priority on purchasing up to its share of ownership, which in the case of Thailand is 13%.

In recent years, the government's policy has favored private-sector development in the fertilizer industry. This approach has been effective in promoting increased fertilizer supply and fostering competition. At this stage, the policy on ownership of any new production facilities in Thailand is not clearly defined. Feasibility studies of several fertilizer projects now being considered by BOI, IFCT, and other government departments should be actively pursued and scrutinized. However, government policy guidance from BOI and other government agencies is needed to determine project suitability and priorities as well as ownership and financing arrangements. These policy decisions must include a determination of the mechanisms, terms, and levels of urea imports from ASEAN sources. Additionally, consideration will have to be given to the timing and financing of any large domestic nitrogen fertilizer unit where costs may exceed the financing capability of the private sector.

Marketing and Distribution

Fertilizer marketing and distribution are primarily in the hands of the private sector with limited participation by public organizations. In 1978 private-sector sales accounted for an estimated 80% of the market and the public sector, about 20%. Private-sector sales were divided approximately 55%-45% among the Metro Company Group and the approximately 50 importers/traders, most of which belong to TFITA. Principal public-sector agencies include MOF and ACFT which procure fertilizers by direct imports and purchases from the private sector.

The usual private-sector channels of distribution involve sales to provincial agents who, in turn, sell to district agents or retail outlets for ultimate sale to farmers. Public-sector sales are

mainly to members of cooperatives or farmer groups and to government agencies.

Fertilizer products are marketed under more than 100 different brand names and trademarks which have been developed and are heavily advertised by producers and importers to appeal to farmers who are generally brand conscious. Over 80 grades of fertilizers are registered for sale, but about 20 grades make up most of the tonnage sold. The most popular grades are AS, 16-20-0, 18-22-0, 18-24-0, 20-20-0, 13-13-21, and 15-15-15. Fertilizers are generally sold to retailers in 50-kg bags, with subdivision to lesser quantities by the dealer at the time of sale to the consumer.

Fertilizer prices are not controlled by the government and are closely related to world market prices since the bulk of demand is met by imports. Competition for major fertilizer markets is keen and tends to keep prices at moderate levels. Marketing margins are reasonable and may leave insufficient capital for financing expansion of fertilizer marketing and distribution facilities and market development activities.

Most of the fertilizer storage capacity is located in the Bangkok area, little at the point of farmer purchase. Fertilizer is transported to use areas mainly by trucks operated by private trucking firms. A relatively good basic road network facilitates truck movement to consuming areas.

Except for the advertising and market development programs of some of the larger importers, there is little real sales or promotional effort at the retail level. Retailers stock fertilizers and usually wait for farmers to come in to buy it. There is a deficiency in farmer education in fertilizer use. The limited fertilizer demonstration and farmer meeting programs of the Agricultural Extension Service reach only a relatively small fraction of farmers.

Government programs have eased constraints to credit availability, but the need exists for a further expansion of agricultural credit facilities and simplification of loan procedures. Agricultural cooperatives and farmer groups are used as channels of extending credit to farmers. Loan repayment rates are relatively low, suggesting the need for strengthening credit supervision. A recent World Bank credit project addresses some of the organizational aspects of providing agricultural credit through BAAC and cooperatives.

The Fertilizer Act, which sets tolerances on fertilizer analyses and weights, was enacted in 1975. However, lack of adequate manpower and facilities has seriously impeded imple-

mentation of fertilizer quality control and other ancillary regulatory programs.

Marketing- and distribution-related constraints to increased fertilizer use in Thailand include: late arrival of imports and thus late delivery to consuming areas; unavailability of credit to farmers lacking sufficient collateral; limited farmer education programs; and lack of reliable, accurate statistical data on fertilizer imports, production, sales, and use. Lack of availability of statistical data precludes or inhibits the development of proper marketing and distribution plans. Cooperatives which could serve an important role in fertilizer marketing and distribution are often lacking in managerial expertise.

Retail fertilizer prices are based on ex-Bangkok warehouse prices plus handling and transport costs to retail outlets; thus, farmers located in more remote areas pay a higher price for the same fertilizer than farmers living in closer proximity to Bangkok.

The following actions would facilitate the development of a more effective marketing and distribution system to accommodate anticipated near-term increases in fertilizer consumption:

1. Reduce the number of grades sold in Thailand by establishing an approved grade list. The grade list would be established and monitored by the fertilizer regulatory agency in consultation with MOAC and fertilizer industry representatives and consist of those grades best suited to the soils and crop needs of Thailand.

2. Increase the number of retail outlets at the village level to provide farmers access to adequate quantities of proper fertilizers at the desired time.

3. Provide improved transportation and warehouse facilities in strategic outlying market areas to relieve traffic congestion in the Bangkok area, where most fertilizer is stored, especially during periods of peak fertilizer movement.

4. Develop a zonal fertilizer pricing system to equalize retail prices at various locations so that fertilizer cost to more remotely located farmers is more in line with cost to farmers residing closer to Bangkok.

5. Assure importers/producers sufficient marketing margins to provide money required for investment in warehousing, transport, and market development.

6. Implement an active and strong farmer education program in cooperation with public- and private-sector groups to expand farmer knowledge of fertilizers and their proper use. The

Agricultural Extension Service should further strengthen and expand its farmer meeting and fertilizer demonstration program.

7. Formulate and implement a fertilizer seeding program in anticipation of the production of new or different types of fertilizers at any new fertilizer complex which may be constructed in Thailand. The seeding program would acquaint agricultural extension personnel, distributors, retailers, and farmers with the properties and proper use of new fertilizers to ensure product acceptability and maximize production and sales from the new fertilizer facility.

8. Consider the establishment of bulk-blending plants in high fertilizer use areas based on the economics of large-volume bulk transport and handling as a means of lowering cost to farmers far removed from Bangkok.

Policy Issues

Continued growth in the agricultural and fertilizer sectors in Thailand will depend on active government support, particularly in defining and implementing policy issues. The main policy issues affecting the sectors are briefly outlined below. The principal factors inhibiting fertilizer use are: (1) price, (2) timely availability, (3) credit, (4) research and extension service, and (5) fertilizer grades and quality control.

Fertilizer Price:Crop Price Ratio

It is generally considered that the ratio of additional crop income over the cost of applied fertilizer should be at least 2.5-3.0 to give farmers sufficient incentive to use fertilizer at optimum agronomic conditions. If it is assumed that the average response is 10 kg of rice per kilogram of applied nutrient, then the cost of 1 kg of nutrient should be no more than three to four times the price of 1 kg of paddy (each at the farm gate) to result in a value-to-cost ratio equal to 2.5-3.0.

Although fertilizer prices in Thailand are relatively competitive with world market prices, present Thai government policy limits the farm-gate price of paddy, which is grown on more than 60% of the cultivated agricultural land. The 1979 estimated average farm-gate cost of fertilizer nutrients for paddy was about $0.68/kg of nutrient, and the price of rice was about $0.15/kg,

which gives a ratio of cost of nutrients to price of rice of 4.5.[3] The cost of fertilizer relative to paddy is much higher in Thailand than in many countries in Asia where the ratio is about 2. Thus, for similar potential crop response, farmers in Thailand have much less incentive to use fertilizer for paddy than many other Asian farmers.

Rice productivity and fertilizer use in Thailand are well below that of other comparable countries in Asia. The government should evaluate the effect of current agricultural price support schemes and develop a mechanism to increase farmer incentives by providing a more favorable fertilizer price:crop price ratio.

Fertilizer Availability

Fertilizer has not always been available at the right time, particularly in regions away from Bangkok, because of heavy reliance on a private sector having a limited scope for marketing margins and profits. Dependency on imports and constraints caused by limited port, storage, and transportation facilities have also contributed to limiting availability. Government policy, while fully supporting private-sector development, should concentrate on (1) increasing domestic production (and availability), (2) establishing a fertilizer price equalization system, (3) promoting more efficient transport, particularly rail, and (4) increasing storage capacity outside Bangkok.

Credit

Lack of credit, particularly to tenant and small farmers without adequate collateral, has been a major cause of low fertilizer use. Agricultural credit has tended to go to larger farmers and for capital purchases rather than fertilizer, seeds, and chemicals. Increasing credit availability, which is essential to augmenting fertilizer use, will also increase financial risks to the banking system. The government should, therefore, carefully evaluate and develop an expanded agricultural credit system,

3. MOF 1979 prices were US $0.69/kg nutrient for 16-20-0, $0.56/kg N for urea, and $0.72/kg N for ammonium sulfate, supplied through cooperatives and farmer associations on cash bases. When supplied with credit from these sources, the price increased about 10%. With fertilizer on credit from merchants the prices increased to about 25% above the MOF base price. The ratios of nutrient cost to price of paddy, using MOF base prices, are therefore 4.5, 3.7, and 4.8, respectively, for nutrients supplied from 16-20-0, urea, and ammonium sulfate.

designed to help all farmers and to promote increased agricultural output.

Extension Services

The need for increased and improved research and extension services is generally recognized in Thailand and is being provided for, in part, through current World Bank agricultural projects. There is a continuing need to expand extension services, to include other crops such as sugarcane, and to concentrate more heavily on fertilizer application, recommendations, and research. Much of the extension effort should come through MOAC, as well as government support and guidance toward increased extension work by fertilizer distributors and marketing agencies.

Fertilizer Grades and Quality Control

There is a need to reduce the present wide range of grades, many with very similar formulations, which make it difficult for farmers and extension agents to promote fertilizer use effectively. Also fertilizer quality control should be improved to minimize fertilizer adulterations, although this is apparently a problem primarily associated with liquid fertilizers which account for a small quantity of the total fertilizer sales.

Other policy issues concerning the fertilizer sector are discussed in the sections on Fertilizer Marketing and in the Recommendations. The government should carefully evaluate its policies toward the fertilizer and agricultural sectors as it develops its strategy to increase local fertilizer production and agricultural support.

RECOMMENDATIONS

Predicated on the planned availability of natural gas by 1983 and the projected domestic demand of 260,000 mt of fertilizer nitrogen in 1985, it is recommended that feasibility studies of an ammonia plant of approximately 1,000-tpd capacity and appropriate downstream fertilizer plants be initiated immediately.[4] Any shortfall in nitrogen could be met by imports from ASEAN plants and

4. BOI is currently considering such a proposal from one private group. In addition, the gas utilization study by PTT will make broad recommendations concerning development of a nitrogen fertilizer complex.

others. This is the central recommendation of the study; those which follow relate to its extension and/or implementation. These collectively constitute the principal points of the strategy for development of the Thai fertilizer sector.

1. There is an immediate need for a central authority to organize and manage the myriad of activities involved in establishing a domestic fertilizer industry. It is recommended that the government take immediate steps to form a National Fertilizer Organization (NFO) or comparable body to plan, organize, and implement programs necessary to the development of a domestic fertilizer industry based on the production of ammonia from indigenous natural gas.

   The NFO is envisaged as being patterned after PTT in regard to objectives, functions, and scope of activities. Its principal functions would be:

   a. To take the leadership in formulating a definitive strategy and master plan for development of the Thai fertilizer sector based on identified government programs and policies affecting its development; the nature and role of government and private enterprise involvement must be delineated.

   b. To plan, organize, and implement programs for the preparation of the necessary feasibility studies related to construction of new fertilizer facilities as defined in the master plan.

   c. To plan, organize, and execute programs for evaluating feasibility reports, preparing bid specifications, soliciting bids, awarding contracts, seeking funding, and implementing plant construction.

   d. To mobilize and coordinate the activities of the public- and private-sector organizations involved in fertilizer-related activities into a cohesive and dynamic national fertilizer program.

   Expeditious action will be required if an ammonia plant and at least a portion of any downstream product capacity are to be installed by the mid-1980s. Pending the formation of an NFO, the appropriate existing government entity should immediately develop and implement the programs outlined above.

2. Proposals contained herein call for the production and sale of large quantities of urea and NP and NPK products with which Thai farmers are not or only marginally familiar. It is recommended that a preproduction sales campaign be initiated immediately to introduce and acquaint farmers with the

properties and use of urea. ASEAN sources, when available, could be used to supply urea for the seeding program. The same procedure should be followed with respect to the NP and NPK products based on urea and/or DAP and other high-analysis materials. The market seeding program should ensure farmer acceptance of the new products, thereby enhancing marketability and alleviating this possible impediment to fertilizer plant operating rate.

3. If the Thai government decides to undertake the construction of a fertilizer plant, expertise in all phases and at all levels of fertilizer production, marketing, and use will be required. It is recommended that capable and experienced expertise be retained to assist in recruiting and training of staff, including on-the-job training at commercial fertilizer installations of the type to be built and operated in Thailand. The government should explore the feasibility of joint ventures with suitable, experienced fertilizer manufacturers.

4. Based on potash discoveries in the Khorat and Sakon Nakhon basins, it is recommended that the Thai government intensify its efforts to delineate a commercial potash ore body. Both carnallite and sylvinite reserves should be considered. Upon completion of DMR's current exploratory work, the government should consider appropriate potash project feasibility studies. As with the nitrogen fertilizer project, any potash project should incorporate the know-how of an experienced organization.

   A systematic exploration program for phosphate rock of marine origin should be developed; available data on reported phosphate rock deposits should be codified.

5. The following recommendations pertain to basic improvements in the present fertilizer system and should be considered regardless of any new developments which might ensue in the fertilizer sector:

   a. Timely and accurate information on fertilizer imports, production, sales, and consumption is vitally needed by the government and private industry to plan intelligently the development and operation of the fertilizer sector. Data currently available from several public agencies are fragmented and inadequate and often inaccurate. It is recommended that one agency, perhaps the DAE/MOAC which is currently active in such work, be assigned the responsibility and given the necessary authority for determining data needs, assembling primary source data, compiling it in a standardized form, and publishing it on a regular basis. This activity would fall within the jurisdiction of an NFO,

when and if such an organization is formed. The following information should be published in an annual "Fertilizer Situation in Thailand" report which would be presented to the government and made available to all interested parties:

(1) Imports by product and nutrient content;

(2) Domestic production by product and nutrient content;

(3) Deliveries by product and by region;

(4) Year-end stocks held by importers, producers, and government agencies;

(5) Apparent consumption by product and nutrient content, by crop, by principal geographical regions;

(6) Wholesale and retail prices of fertilizer by grade;

(7) Prices received by farmers for principal crops;

(8) Factors affecting fertilizer production and consumption during the past year;

(9) Short- and long-term fertilizer supply/demand outlook; and

(10) Recommendations for avoiding or alleviating supply/demand problems.

Certain of the statistical information, such as items 1, 2, 3, and 6, should be published on a more timely basis.

b. Soil fertility and plant nutrition research should be expanded as follows.

(1) Possible sulfur-deficient areas should be defined and monitored.

(2) The effect of AC-containing fertilizers upon yield and quality of sugarcane and fruit crops should be determined. Research studies should also be implemented to determine the residual effect of chloride fertilizers on chloride-sensitive crops, such as tobacco, which are grown on soils previously planted to crops fertilized with AC. The effect of AC on soil salinity of poorly drained soils should be studied.

(3) Soil fertility trials conducted in farmers' fields should be expanded on upland crops.

(4) The program should be centralized and expanded to test Thailand phosphate rocks for direct application to replace the use of processed phosphates in areas near the domestic deposits of phosphate rock.

c. Economic, socioeconomic, and policy studies should be expanded to:

(1) Investigate the reason for the low level of fertilizer use on maize, cassava, and other upland crops.

(2) Better define the effect of the relationships of crop and fertilizer nutrient prices upon fertilizer use and production levels of various crops.

(3) Prepare specific recommendations on improving the fertilizer price: crop price ratio and on expanding fertilizer credit availability.

d. Farmer knowledge of fertilizer must be expanded, if the farmer is to derive maximum benefit from its use. Under the World Bank National Extension Project, the Agricultural Extension Service is being reorganized, strengthened, and expanded. Extension personnel should be further provided with intensive training on fertilizer use and crop marketing and given the means necessary to carry out the urgently needed expanded program of farmers' meetings and field demonstrations. On-farm trials should be conducted jointly with research and extension specialists to more closely coordinate research activities with actual crop responses to fertilizer application under field conditions. Cost:benefit ratios should be determined from the regional farm trials on a routine basis. Improved information flow and program coordination between the Agricultural Extension Service and research components of the MOAC are recommended. Closer cooperation with the private sector, MOF, and ACFT is urged particularly in training the fertilizer dealer, the last and often most influential link with the farmer.

e. The present fertilizer regulatory program does not provide adequate consumer protection. At the retail level the farmer has little assurance that he is receiving the weight or quality of fertilizer which he purchased. It is recommended that the fertilizer regulatory agency,

as provided for by the Fertilizer Act of 1975, be strengthened to provide for additional inspection and laboratory staff and facilities required to take an adequate number of samples, particularly from retailers, and to analyze them quickly. Importer and manufacturer registration and reporting requirements, particularly as they apply to the voluntary submittal of import, production, and inventory data, should be strengthened; the latter reports should be made mandatory.

f. Basic recommendations for improvement of the marketing and distribution system include:

(1) Reduce the number of grades sold in Thailand by establishing an approved grade list;

(2) Increase the number of retail outlets at the village level;

(3) Upgrade and/or improve road, rail, and water transport systems, particularly in remote areas, to accommodate the anticipated increases in fertilizer to be handled;

(4) Provide for additional warehouse facilities strategically located in heavy consuming areas to reduce congestion and time delays in moving material from the Bangkok areas; and

(5) Determine a means of equalizing fertilizer retail prices paid by farmers in various regions of Thailand.

g. A number of the above recommendations will require the government to make and implement strong policy decisions regarding the fertilizer sector. These include decisions on crop pricing policy, import availability, role of ASEAN supply, support of new fertilizer production facilities, and implementation of recommended improvements to the fertilizer marketing and distribution system.