PN-AAS-740

ISN 40034

UNDERSTANDING STABILIZED EARTH CONSTRUCTION

by
Alfred Bush

Illustrated by
William C. Neel

Technical Reviewers:
Chris Ahrens
Daniel Kuennen

Published by:

Volunteers in Technical Assistance (VITA)
1815 North Lynn Street, Suite 200
Arlington, Virginia 22209 USA
Telephone 703/276-1800
Cable VITAINC
Telex 440192 VITAUI

PREFACE

This paper is one of a series published by Volunteers in Technical Assistance to provide an introduction to specific state-of-the-art technologies of interest to people in developing countries. The papers are intended to be used as guidelines to help people choose technologies that are suitable to their situations. They are not intended to provide construction or implementation details. People are urged to contact VITA or a similar organization for further information and technical assistance if they find that a particular technology seems to meet their needs.

The papers in the series were written, reviewed, and illustrated almost entirely by VITA Volunteer technical experts on a purely voluntary basis. Some 500 volunteers were involved in the production of the first 100 titles issued, contributing approximately 5,000 hours of their time. VITA staff included Leslie Gottschalk as primary editor, Julie Berman handling typesetting and layout, and Margaret Crouch as project manager.

Alfred Bush, author of this paper, is a research consultant in construction systems development. He has published widely in this field, and often serves as a technical consultant on housing and development and community planning projects. Reviewers Chris Ahrens and Daniel Kuennen are also specialists in the area. Ahrens is an international program adviser at Warren Wilson College, and Kuennen is a community development specialist with the University of Delaware Cooperative Extension Service. Artist William Neel is a certified industrial instructor, a construction engineer, a professional draftsman, and a professional technical illustrator.

VITA is a private, nonprofit organization that supports people working on technical problems in developing countries. VITA offers information and assistance aimed at helping individuals and groups to select and implement technologies appropriate to their situations. VITA maintains an international Inquiry Service, a specialized documentation center, and a computerized roster of volunteer technical consultants; manages long-term field projects; and publishes a variety of technical manuals and papers. For more information about VITA services in general, or the technology presented in this paper, contact VITA at 1815 North Lynn Street, Suite 200, Arlington, Virginia 22209 USA.

UNDERSTANDING STABILIZED EARTH CONSTRUCTION

by VITA Volunteer Al Bush

I. INTRODUCTION

Soil is one of the oldest building materials. It has been used for centuries in all parts of the world. Ancient temples, fortifications, and pyramids as well as part of the Great Wall of China were built with soil.

The three traditional methods of soil construction are:

1. adobe block or lumps built up into walls; adobe is sun-dried soil mixed with stabilizers such as straw or rice husks to strengthen the soil;

2. wattle and daub: interwoven timber, saplings, or bamboo daubed with mud; and

3. rammed earth: soil mixed with stabilizers and subjected to high pressure.

Pure soil--whether molded into a block, i.e., adobe brick, or cut as a slab, i.e., sod--is technologically suitable for home and commercial construction. It can be used in combination with timber frames or stone. No soil additives are used in this process.

Stabilized soil, a product of scientific research, offers medium- and high-technology soil options. Unfortunately, local conditions will determine its applicability to your situation. Stabilized earth may not be appropriate unless stabilizing additives, technical assistance, and machinery are available and affordable. Simple adobe or rammed-earth may be preferable.

Medium technology can produce soils usable for road beds, airport runways, shoulders, road surfaces, and storage and parking areas. Higher technology options include: sub-bases for concrete pavings, drainage ditches, canals, dike surfaces, reservoir linings, and multi-story foundations.

Depending on the level of technology available, soil can serve as a basic resource. It is suitable as a universal building material. Many types of soil are relatively accessible, removable, and mixable. High technology increases its uses.

HIGH OR LOW TECHNOLOGY?

In evaluating soil as a building component consider whether it

- meets the technical needs of your local production situation by:

  - using local materials, power, and resources
  - minimizing the need for imported material
  - reducing costly transportation
  - ensuring product availability and dependability

- meets social requirements of the local production situation by:

  - using existing or easily transferable skills
  - avoiding costly training
  - minimizing displacement of labor
  - minimizing social/cultural disruption

- meets the economic requirements of the local situation by:

  - reducing dependence on outside resources
  - ensuring low-cost alternatives
  - requiring limited machinery or capital investment.

For example, in the mountainous country of Colombia, South America, a technical adviser noted about the use of adobe pressed blocks that, "It had taken 267 five-hour mule trips to carry up needed supplies (sinks, roof, cement, etc.) for a community built schoolhouse. But thanks to the CINVA-Ram earthen block press, farmers didn't need to haul heavy cement blocks--saving at least 500 more mule trips!"

BASIC THEORY OF THE TECHNOLOGY

Natural, compacted soil has good insulating and resistant qualities. It is, however, vulnerable to moisture and the erosive effects of weather. Additives such as asphalts, natural cements, and other compounds, including salts, syrups, oils, and powders, stabilize soil in varying degrees. Soil durability and strength can also be improved by:

- changing the distribution of grain size--gradation control;

- compacting the soil;

- adding minerals or chemicals; or
- mixing all of the above.

A properly consolidated, well-graded soil that is adequately moisturized, mixed, and cured will provide a strong, stable, waterproof, long-lasting, low-maintenance building material.

Soil stabilization depends on soil classification and the type of structure to be built. Understanding the properties of various soils will make it easier to select the highest quality soil possible. Public buildings or highways require a sophisticated technical approach. Simple structures such as houses require a less technical approach.

Before using soil as a building material, it is necessary to:

- understand the soil characteristics in general;
- conduct soil tests to ensure that the soil chosen can be stabilized; and
- stabilize the soil with additives or mixtures to make it strong, cohesive, waterproof, and weatherproof.

Although some soils have excellent stability against moisture, few meet all stabilization requirements. The best soil contains up to 70 percent of coarse gravels and sands, with the remainder consisting of finer silts, clays, and plastic-like particles.

The particle size distribution of a soil determines how well it can be stabilized. A well-graded soil contains the correct proportions of different-sized particles. The spaces, or voids, between larger particles are filled by smaller ones. This is called the void ratio.

Highly technical construction requires a void ratio test. Other stabilization tests to determine soil composition and suitability may also be needed. Small, less technical, projects need only simple tests for good results.

The technical requirements will be reviewed first, followed by the short, simple procedures, which a builder with less skills, equipment, and controls can use.

IX. SOIL CLASSIFICATION

To determine the suitability of your soil for stabilization and building, it is necessary to understand soil classification. Table 1 classifies the world's soils into three categories: order, suborder, and great soil groups. This table permits a close study of soils worldwide with similar agricultural characteristics, climates, topography, and drainage characteristics. The three categories will help you to understand your local soil type.

Figure 1 is useful in determining the soil profile. It shows the breakdown of the soil layers, called horizons, into four basic levels labeled A, B, C, and D. These levels take us from the surface layer down to the underlying, or bottom-most layer (stratum). From the top down, the A and B levels are layers that have been modified by weathering. The C level has been unaltered by the soil-forming processes. The A layer is the topsoil, usually containing most of the organic material; the B layer is the subsoil; the C layer is the parent material, or mother soil, containing clay, silt, sand, gravel or a combination of these, or stone of indefinite thickness; the D layer is the underlying structure.

Suitable building soil contains the correct percentages of sand, silt, and clay, as shown in Figure 2. In general, soils containing less than 20 percent clay are classed as gravel and sand, loamy sands, sandy loams, and loams; soils containing 20 to 30 percent clay are called clay loams; and soils containing over 30 percent clay are classed as clay. The clay fraction is of major importance in earth construction. Clay binds the larger particles together, making it suitable as a building material.

The U.S. Department of Agriculture Textural Classification System grades soils into fractions according to the size of particles, as follows:

Very coarse sand:	2.0 mm to 1.0 mm (No. 10 sieve to No. 18 sieve)
Coarse sand:	1.0 mm to 0.5 mm (No. 18 sieve to No. 35 sieve)
Medium sand:	0.5 mm to 0.25 mm (No. 35 sieve to No. 60 sieve)
Fine sand:	0.25 mm to 0.1 mm (No. 60 sieve to No. 140 sieve)
Very fine sand:	0.1 mm to 0.05 mm (No. 140 sieve to No. 20 sieve)

Table 1. Soil Classification in the Higher Categories

Order	Suborder	Great Soil Groups
Zonal soils	1. Soils of the cold zone	Tundra soils
	2. Light-colored soils or arid regions	Desert soils Red desert soils Sierozem Brown soils Reddish-brown soils
	3. Dark-colored soils of semiarid, subhumid, and humid grasslands	Chestnut soils Reddish chestnut soils Chernozem soils Prairie soils Reddish prairie soils
	4. Soils of the forest-grassland transition	Degraded chernozem Noncalcic brown or Shantun brown soils
	5. Light-colored podzolized soils of the timbered regions	Podzol soils Gray wooded or Gray podzolic soils* Brown podzolic soils Gray-brown podzolic soils Red-yellow podzolic soils*
	6. Lateritic soils of forested warm-temperature and tropical regions	Reddish-brown lateritic soils* Yellowish-brown lateritic soils Laterite soils*
Intrazonal soils	1. Halomorphic (saline and alkali) soils of imperfectly drained arid regions and littoral deposits	Solonchak or Saline soils Solonetz soils Soloth soils
	2. Hydromorphic soils of marshes, swamps, seep areas, and flats	Humic-glei soils* (includes wiesenboden) Alpine meadow soils Bog soils Half-bog soils Low-humic-glei* soils Planosols Groundwater podzol soils Groundwater laterite soils
	3. Calcimorphic soils	Brown forest soils (braunerde) Rendzina soils
Azonal soils		Lithosols Regosols (includes dry sands) Alluvial soils

* New or recently modified great soil groups.

Source: "Higher Categories of Soil Classification: Order, Suborder, and Great Soil Groups," by James Thorp and Guy D. Smith, Soil Science, Vol 67, January to June 1949, pp. 117-126.

Figure 1. A Hypothetical Soil Profile Having All the Soil Horizons

Organic debris lodged on the soil; usually absent on soils developed by grasses.	A_0	Organic debris.
	A_1	A dark-colored horizon containing a relatively high content of organic matter but mixed with mineral matter. Thick in chernozem and very thin in podzol.
Zone of eluviation	A_2	A light-colored horizon, representing the region of maximum leaching (or reduction) where podzolized* or solodized.** The bleicherde of the podzol. Absent in chernozem,† brown,† sierozem,† and some other soils.
The solum. (This portion includes the true soil developed by soil-building processes.	A_3	Transitional to B but more like A than B. Sometimes absent.
	B_1	Transitional to B but more like B than A. Sometimes absent.
Zone of illuviation. (Exclusive of carbonates or sulphates as in chernozem, brown, and sierozem soils. In such soils this horizon is to be considered as essentially transitional between A and C.)	B_2	A (usually) deeper-colored horizon representing the region of maximum illuviation where podzolized or solodized. The orstein of the podzol and the claypan of the solodized solonetz. In chernozem, brown, and sierozem soils, this region has a definite structural character, frequently prismatic, but does not have much if any illuvial materials; it represents a transition between A and C. Frequently absent in the intrazonal soils of the humid regions.
	B_3	Transitional to C.
The parent material.	C	Parent material.
Any stratum underneath the parent material, such as hard rock or a layer of clay or sand, that is not parent material but may have significance to the overlying soil.	D	Underlying stratum.

*Process of water leaching downward through A and B horizons.
**Process of accumulating surface minerals through leaching upward, produced by evaporation in areas of low rainfall causing moisture movements to be toward the surface.
†Members of great soil groups (see Table 1).
Source: Portland Cement Association, Soil Primer. (Skokie, Illinois: Portland Cement Association, 1956).

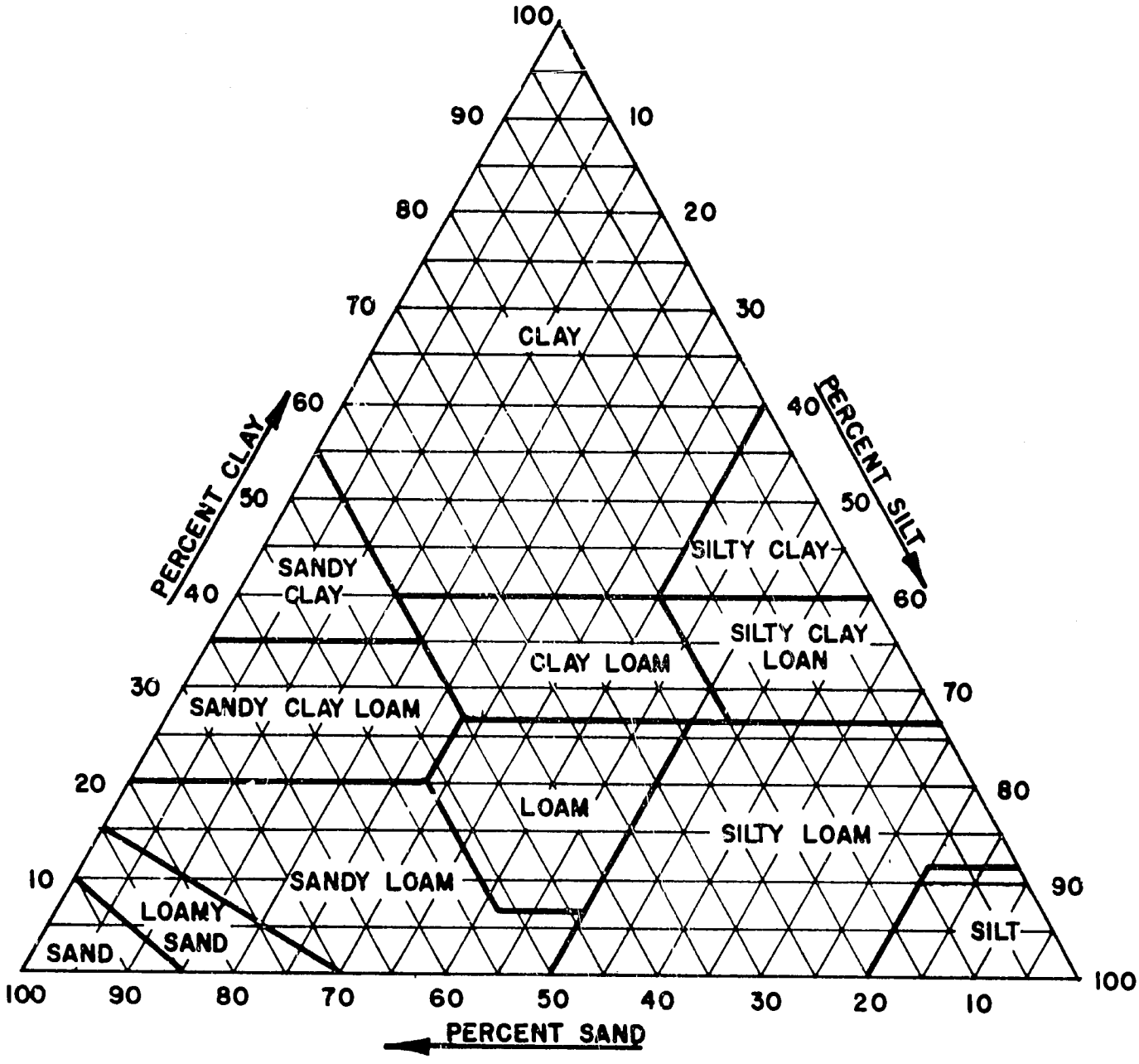

Figure 2. The U.S. Department of Agriculture Textural Classification Chart

Source: Soil Survey Manual, U.S. Department of Agriculture Handbook No. 18, 1951.

Silt:	0.05 mm to 0.002 mm
Clay:	0.002 mm to 0.0 mm

Table 2 shows soils broken down by particle size (or grain size).

III. SOIL TESTS

Soil properties must be analyzed and tested to determine the suitability of soils for stabilization. The properties of clay vary greatly in their physical and chemical characteristics. The plastic properties of a clay are measured by gradually removing water from it. Clay that contains a lot of water behaves like a liquid. The liquid limit is the moisture point at which a soil passes from a plastic to a liquid state. To conduct a liquid limit test:

- Place the soil-water paste in a standard cup. Divide it into to halves (1.2 cm apart) with a grooving tool.
- Repeatedly strike the bottom of the cup on a hard, flat surface from a uniform measured height of 1 cm until the test sample flows from each half together in the groove. The liquid limit is defined as the water content that fills the 1.2 cm groove after 25 standard strikes of the cup.
- Experiment by adding more water to different samples. At each addition of water the number of strikes of the cup required to close the groove are recorded. Your results will vary above or below the 25 standard. The range should be between 10 and 40 strikes.

Clay crumbles as its moisture content is reduced to its plastic limit. The plastic limit is the point at which the soil becomes too dry to be plastic. To determine the plastic limit of your soil, roll a thread of soil to 3.2 mm in diameter between the palm of your hand and a dry, flat surface. The soil thread is at its plastic limit when it crumbles under this rolling action.

The liquid limit minus the plastic limit of a soil is called the plasticity index. The plasticity index depends largely on the amount of clay present. Both the liquid limit and the plasticity index are affected by the amount of clay and the type of clay minerals present in a soil. The strength of a soil increases as the plasticity index increases. However, high plasticity soils shrink when dry and expand when wet. Stabilization minimizes these fluctuations.

Table 2. Soil-separate Size Limits of ASTM[a], AASHO[b], USDA[c], FAO[d], Corps of Engineers, and USBR[e]

| | | |

Sands and sandy soils with little or no clay content have no plastic limit. Fine-grained soils with a low degree of plasticity have liquid limits of less than 35 percent; the clay content of these soils is generally less than 20 percent. Fine-grained soils of medium plasticity have liquid limits between 35 and 50 percent; these soils usually contain between 20 and 40 percent of clay. Soils with high plasticity have liquid limits of more than 50 percent; their clay content is normally more than 40 percent.

A high liquid limit and plasticity index means soils are susceptible to water and moisture penetration. They are difficult to stabilize with cement and need larger amounts of stabilizer than those with a low liquid limit and plasticity index. Soils with a high liquid limit and plasticity index can stabilize with lime. Lime changes the plastic properties of soil.

Soil Stabilization Tests

Moisture-Density Test

Natural soil contains pore spaces filled partly by air and water. Compaction can reduce these spaces. A well-compacted soil is best.

Moisture content can be determined by a simple test:

- Take various soil samples from intended supply sites.
- Dry-mix freshly dug soil separately.
- Place samples in dishes or pans of equal sizes and weights. Weigh and record each.
- Allow each to dry naturally or place in an oven.
- When dry, re-weigh and record differences of moist and dry weights. Those with heavier dry weights have high soil densities. These are best.

Wet Strength Test

A stabilized soil must withstand moisture. Since rain moistens soil construction materials, it is important that the wet compressive strength of a stabilized soil be determined. The wet strength of a stabilized soil is one third of its dry strength. Strength tests are performed on cured soil blocks, which are soaked for at least 24 hours. (Note: the normal curing period is 28 days during which time the specimens are kept moist.) The test determines the crushing strength of full-sized blocks.

The soil blocks or bricks can now be tested for compressive strength. Here is the procedure:

- Place a brick over the supports located two inches from the ends of the brick.
- Place a two-inch rod midway and parallel to the two supports.
- A load is applied to a maximum of 500 pounds. Compressive strength should average between 250 and 300 pounds before rupture.

A simple compression machine can be constructed. Figure 3 is an example of a modulus that can be used for wet or dry brick tests.

Soil Mixes for Improved Stabilization

There are many ways to improve the stability of soils. For example, varying the mineral content by adding crushed limestone or limestone dust to a granite mixture changes the chemical attributes of a soil. Limestone increases the pH, making the soil water resistant. Other materials, such as hydraulic lime and various salts, produce similar results. Adding asphalt emulsions (that is, asphalt mixed with water) and hydraulic and Portland cements to a soil also produces good results. Stabilizers improve the mechanical and chemical bond, adding strength and weather resistance to the soil.

Portland cement begins to react immediately when mixed into wet soils. Lime takes longer than cement to harden. It attains about one-half the strength of soil-cement mixes. Unfortunately, cement is more expensive and often unavailable.

Each stabilizer mix must be extensively tested for: (1) weather and water immersion resistance, and (2) compressive strength.

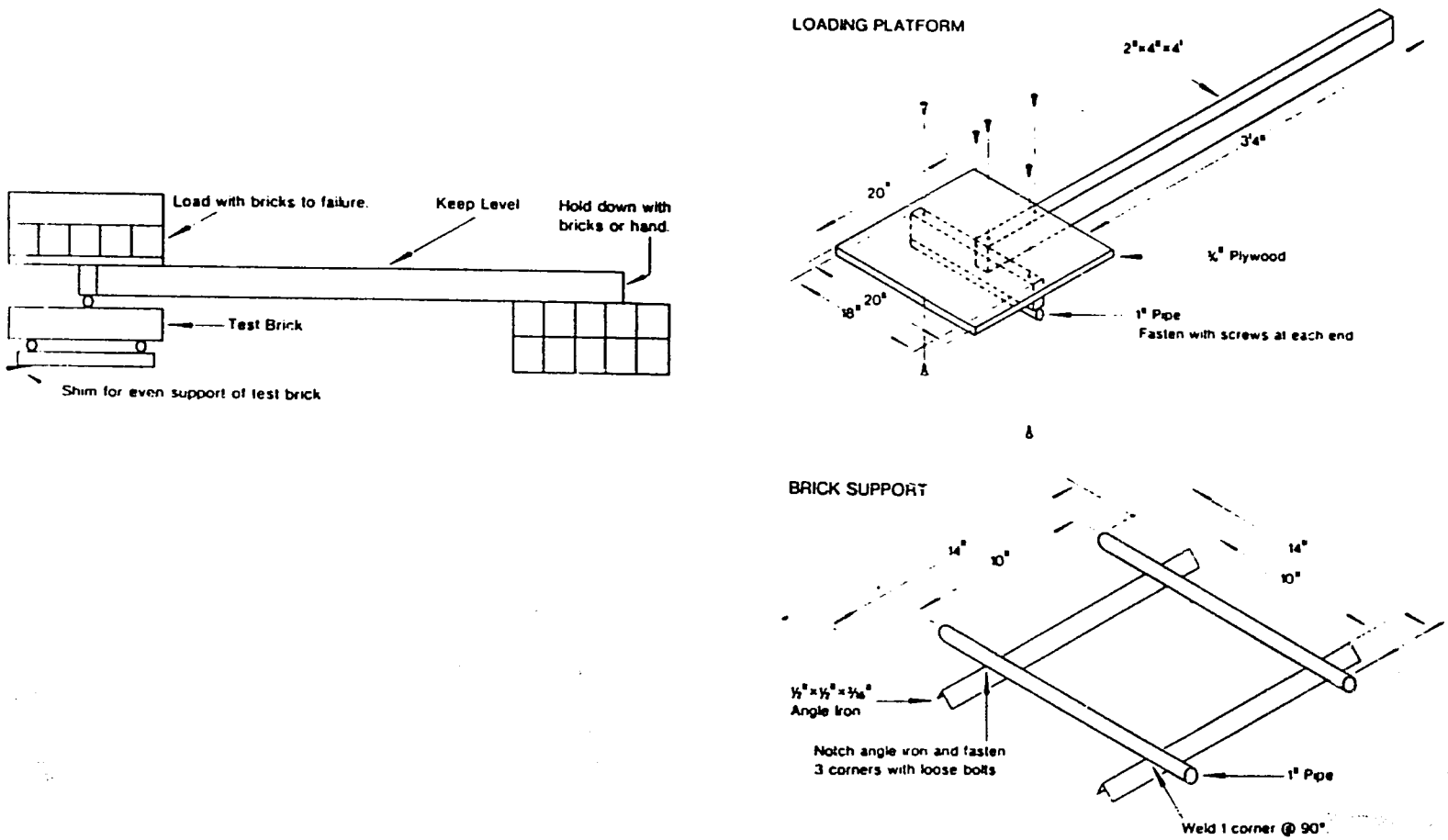

Figure 3. Modulus of Rupture Test Device

Source: California State University, Manufacture of Asphalt Emulsion Stabilized Soil Bricks (Fresno, California: Fresno Foundation, June 1972), p. 64.

Unstabilized Versus Stabilized Soils

Comparative tests of unstabilized and stabilized soils show that both dry and wet strengths of cement-stabilized soils are stronger and more water resistant than the best unstabilized soils.[1] An unstabilized block retains only 20 to 30 percent of its dry strength. A cement-stabilized block retains 60 to 65 percent of its dry strength. Dry strength accounts for the stabilizing quality of soil-cement under wet-dry and freeze-thaw conditions.

Experimentation with other additives has produced mixed results. Wood shavings and sawdust mixed with Portland cement have been tested. Stabilization results with sawdust were not satisfactory; stabilization results with wood shavings are somewhat better. You may want to field test inexpensive, available materials using the test methods previously discussed.

Soil-Cement Tests

A simple procedure is the 7-day compressive strength test for materials.

Soil-Cement Mixes

Table 3 gives cement quantities by volume and weight for testing various types of soils. Note that the range in cement requirements varies from 5 to 14 percent by volume and from 3 to 16 percent by weight for the total range of soil groups, allowing for variations in the subgroups.

---

[1] Unstabilized blocks, air-dried to stable weight, vary in strength between 15 and 25 Kg/cm^2, or between 220 and 370 lb/in^2; when wet (i.e., when they are kept in water for 24 hours), they vary in strength between 0 and 5 Kg/cm^2, or between 0 and 75 lb/in^2, absorbing between 12 and 40 percent moisture by volume. Cement-stabilized, air-dried block tested between 25 and 35 Kg/cm^2 (or between 370 and 520 lb/in^2), and between 15 and 23 Kg/cm^2 (or between 220 and 340 lb/in^2) when wet, gains between 6 and 12 percent moisture by volume.

Table 3. Cement Requirements of AASHO[a] Soil Groups

AASHOa Soil Group	Usual Range in Cement Requirement (Percent by Volume)	(Percent by Weight)	Estimated Cement Content and That Used in Moisture-Density Test (Percent by Weight)	Cement Contents for Wet-Dry and Freeze-Thaw Tests (Percent by Weight)
A-1-a	5- 7	3- 5	5	3- 4- 5- 7
A-1-b	7- 9	5- 8	6	4- 6- 8
A-2	7-10	5- 9	7	5- 7- 9
A-3	8-12	7-11	9	7- 9-11
A-4	8-12	7-12	10	8-10-12
A-5	8-12	8-13	10	8-10-12
A-6	10-14	9-15	12	10-12-14
A-7		10-16	13	11-13-15

[a]American Association of State Highway Officials.

Source: Portland Cement Association, Soil-Cement Construction Handbook. (Chicago, Illinois: Portland Cement Association, 1956).

Table 4 provides cement content by volume and weight for miscellaneous materials used in construction.

Table 4. Average Cement Requirements of Miscellaneous Materials

Type of Miscellaneous Material	Estimated Cement Content and That Used in Moisture-Density Test (Percent by Volume)	Estimated Cement Content and That Used in Moisture-Density Test (Percent by Weight)	Cement Contents for Wet-Dry and Freeze-Thaw Tests (Percent by Weight)
Shell soils	8	7	5- 7- 9
Limestone screenings	7	5	3- 4- 5- 7
Red dog	9	8	6- 8-10
Shale or disintegrated shale	11	10	8-10-12
Caliche	8	7	5- 7- 9
Cinders	8	8	6- 8-10
Chert	9	8	6- 8-10
Chat	8	7	5- 7- 9
Marl	11	11	9-11-13
Scoria containing material retained on the No. 4 sieve	12	11	9-11-13
Scoria not containing material retained on the No. 4 sieve	8	7	5- 7- 9
Air-cooled slag	9	7	5- 7- 9
Water-cooled slag	10	12	10-12-14

Source: Portland Cement Association, Soil-Cement Construction Handbook. (Chicago, Illinois: Portland Cement Association, 1956).

To test for proper hardness, rapid "pick" and "click" tests are performed, using 7-day-old water-soaked blocks. Using a finely pointed object, stab with force at the brick. Measure the object's penetration. Penetration should be less than one-fourth of an inch. For the "click" test, hold one brick in each hand. Slam them together. A sharp sound indicates hardness. A soft sound indicates softness.

The moisture density test also can be used for stabilized soils. Greatest compaction occurs at maximum density and optimum moisture content. This applies equally for hand tamped or machine-compacted stabilized soils.

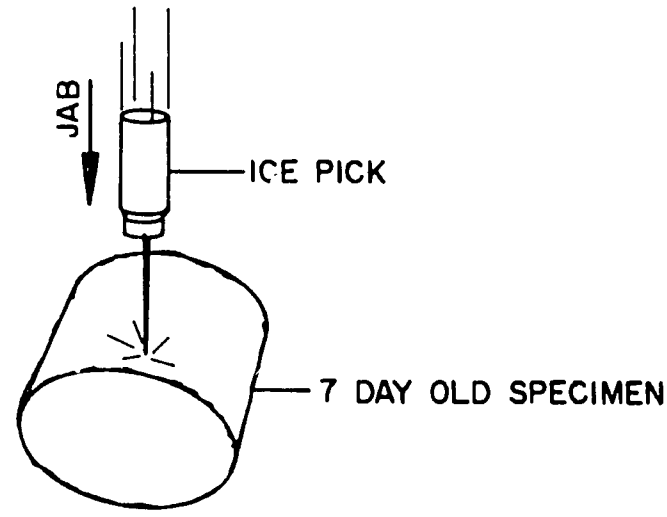

Figure 4. The Pick Test

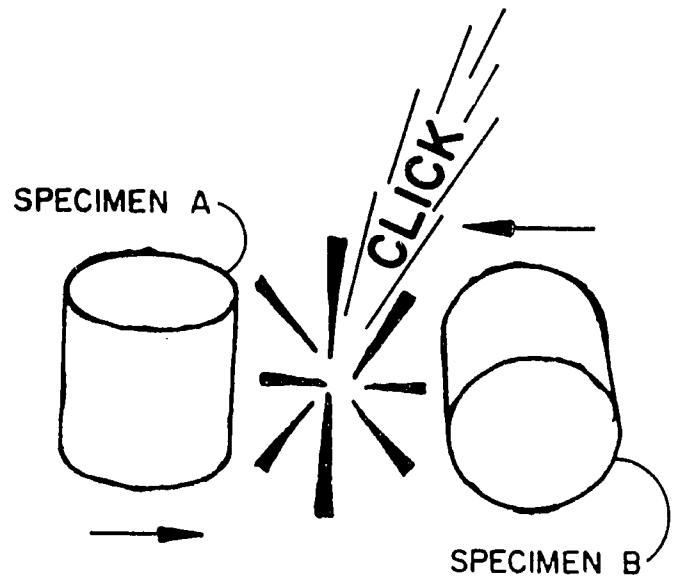

Figure 5. The Click Test

Other Soil-Cement Mixes

Soil mixes using cement as a binder are also used in two other forms. These are: (1) cement-modified soils, and (2) plastic soil-cement.

Cement-Modified Soils

Cement-modified soils are mixed with substandard granular soils, and Portland cement to reduce plasticity and to raise weight-bearing ability. Cement-modified soils are used as base courses for flexible pavements or as sub-bases for pavements. These substandard soils with high plasticity indexes can be stabilized by adding very small percentages of cement, as shown in Table 5. This produces an increase in bearing values which are permanent, as shown in Table 6.

Table 5. Permanency of Plastic Index (P.I.) Reduction of Cement-Modified Granular Soil

	Cement Content (Percent by Volume)		
	0	3	5
	P.I.		
Raw soil[a]	14	--	--
Laboratory mixture, age 7 days	--	4	NP[b]
Laboratory mixture after 30 cycles freeze-thaw	--	3	NP
Laboratory mixture after 60 cycles freeze-thaw	--	1	NP

[a]A-2-6(0) soil from Carroll County, Tennessee, USA.
[b]Nonplastic.
Source: Portland Cement Association, Soil-Cement Construction Handbook. (Chicago, Illinois: Portland Cement Association, 1956).

Table 6. Permanency of Bearing Values of Cement-Modified Granular Soil

	Bearing Value
Raw soil[a]	43
Laboratory mixture, 2 percent cement by weight at age 7 days	255
Laboratory mixture, 2 percent cement by weight after 60 cycles freeze-thaw	258
Laboratory mixture, 4 percent cement by weight at age 7 days	485
Laboratory mixture, 4 percent cement by weight after 60 cycles freeze-thaw	574

aA-1-b(0) disintegrated granite from Riverside County, California, USA.
Source: Portland Cement Association, Soil-Cement Construction Handbook. (Chicago, Illinois: Portland Cement Association, 1956).

Silty-clay soils have: (1) high water-holding capabilities, (2) volume change capacities, and (3) low bearing strengths. They are normally unsuitable for subgrades. Silty-clay soils require cement mixtures greater than those for granular soils. By modifying them with cement, they have use:

1. as a modified subgrade for flexible or soil-cement pavements;

2. as a sub-base for concrete paving, which will control moisture and volume changes in the subgrade; and

3. in stabilizing highway fills, strengthening soft areas in subgrades, and as backfill material in trenches.

Plastic Soil-Cement

Plastic soil-cement is a thorough mixture of soil, Portland cement, and water. When mixed, it has a plaster mortar consistency. Light-textured sandy soils are ideal for these mixtures. Soil selection is based on 30 percent or less of the material that passes through a No. 200 mesh sieve. Suitable cement weight is about four percent greater than similar soil-cement compacted ones. The density of these mixtures is about 15 lb per cubic foot (240 Kg/M^3) less than the maximum density of a compacted soil-cement mixture at optimum moisture content.

To increase surface resistance to water erosion, increase cement content by two percent.

HIGH-TECHNOLOGY APPLICATION OF SOIL

Equipment Needed for Soil-Cement Construction

An application of soil-cement to road construction is shown in Figure 6. It identifies the type of equipment used with as step-by-step operations. Note that the materials are generally mixed, wetted, compacted, and cured in place.

Due to the varieties of soil, it may be necessary to modify the soil-cement processing operations outlined in Figure 6. For example, breaking up a clayey soil is difficult. You can add an intermediate step of prewetting and mixing some lime (or .6 to 1.0 percent calcium chloride) into the soil, forming the mixture into windrows, and letting it stand overnight. This mix diffuses the moisture throughout the material by breaking down soil particles. The Portland cement is now ready to mix with the soil.

Cost/Economics

Soil-cement is an inexpensive road construction material. Normally, it is 50 percent cheaper than building with comparable materials. Over 70,000 miles of soil-cement roads in the United States attest to its cost-effectiveness.

LOW-TECHNOLOGY APPLICATIONS OF SOIL

Housing Construction Equipment

A variety of equipment can be used to construct low-cost residential houses. Two techniques--rammed-earth construction and pressed block making--are discussed in this section. Both techniques require minimal training or equipment. Rammed-earth construction is less dependent on outside technology since its major technical material is wooden forms. Pressed blocks do require importation of either the machine or high-grade metal for fabrication. Whereas rammed earth cannot be transported, with care, blocks can be.

Rammed-Earth Construction

Rammed earth walls are made by ramming moist earth into forms similar to those used for concrete construction. Figure 7 shows a sliding form for rammed earth construction. Earth is compacted either mechanically or by hand. Figure 8 shows two types of hand rammers used to assure proper compaction of

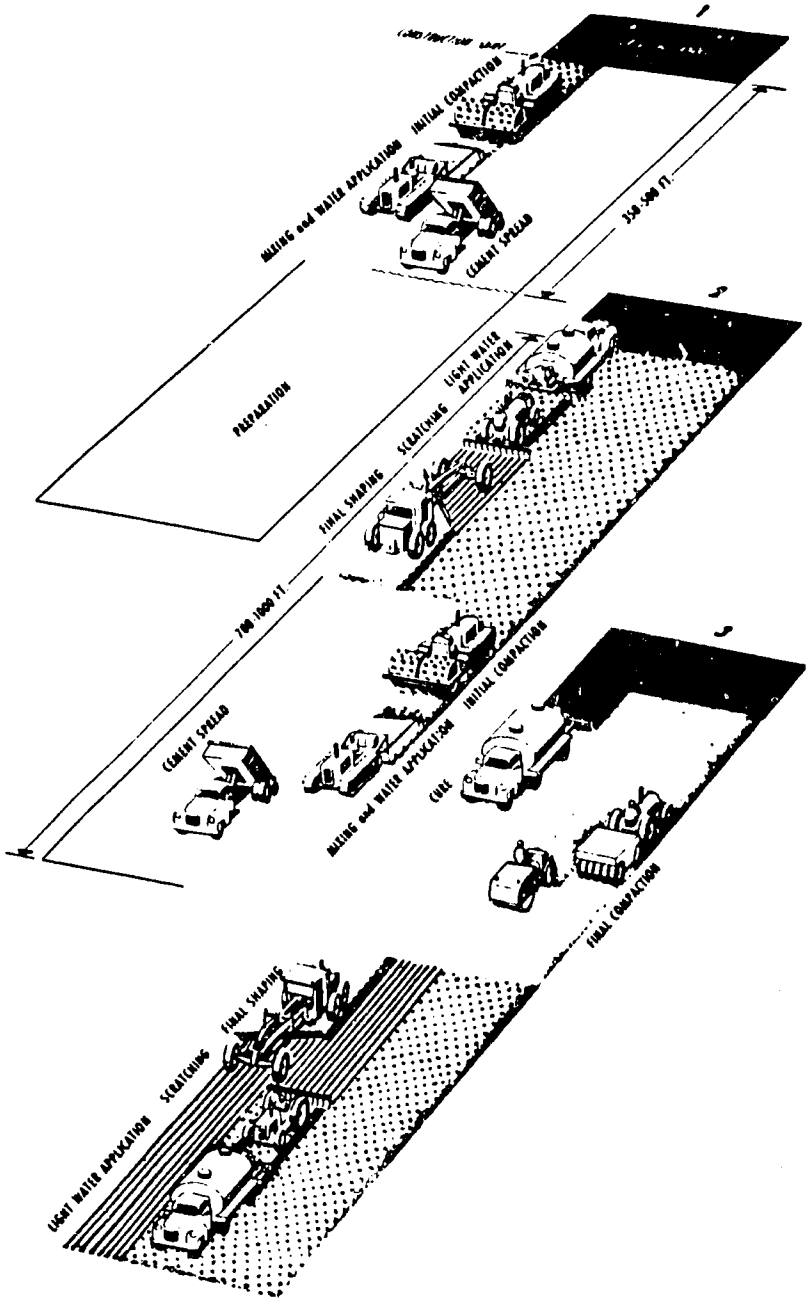

Construction Steps

A. Preparation
   With in-place soil
   1. Shape roadway to crown and grade.
   2. Loosen soil to design depth when necessary and reshape.
   With borrow soil
   1. Shape subgrade to crown and grade.
   2. Compact subgrade.
   3. Place borrow soil.
   4. Shape borrow soil.

B. Soil-cement processing
   1. Spread Portland cement.
   2. Mix and apply water.
   3. Compact.
   4. Finish.
   5. Cure.

Typical Equipment Requirements

For preparation:
1 motor grader
For handling bulk cement:
1 cement conveyor
2 or more cement trucks as required
1 portable truck scale
1 mechanical cement spreader--6 to 10 ft. wide
For mixing and water application:
1 flat-type traveling mixing machine
1 water pump at source
2 or more water supply trucks as needed
For compaction:
sheeps-foot roller
For finishing:
road graders, water sprays, rollers
For curing:
moisture-retaining cover (e.g., burlap), sealer (e.g., paint)

Figure 6. Diagrammatic Sketch of a High Technology Soil-Cement Processing Operation with a Flat-type Traveling Mixing Machine

Source: Portland Cement Association, Soil-Cement Construction Handbook. (Chicago, Illinois, Portland Cement Association, 1956).

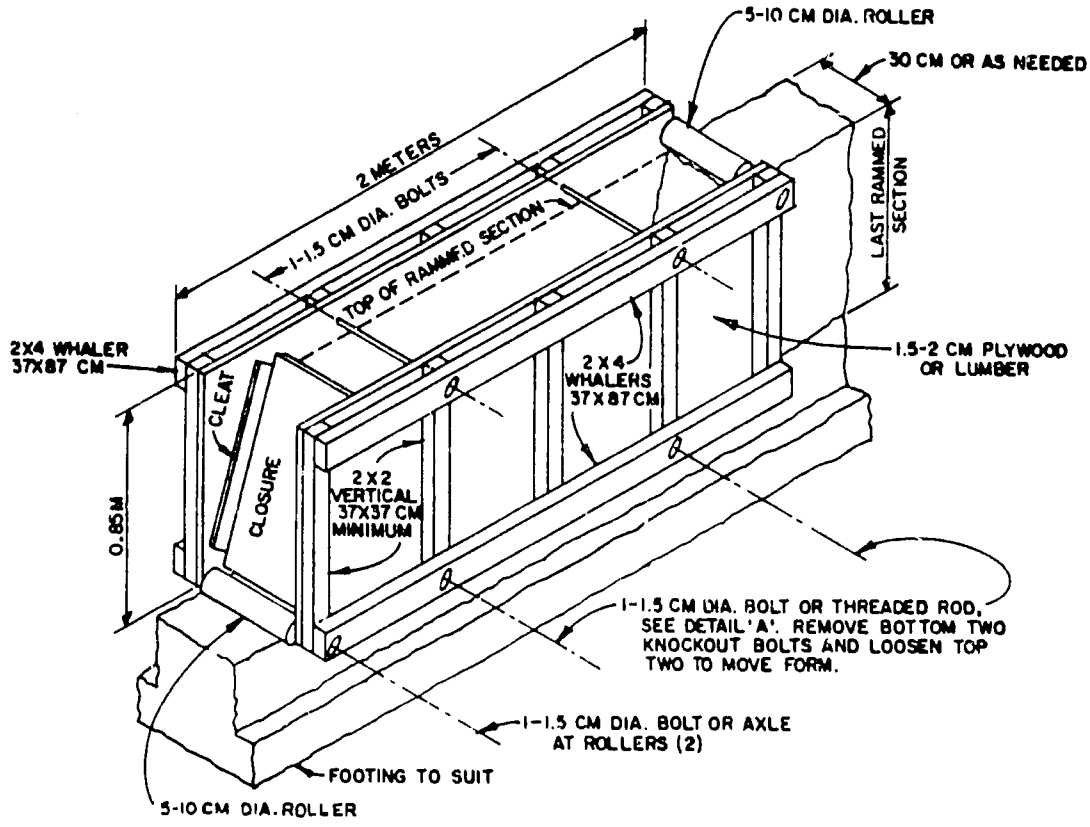

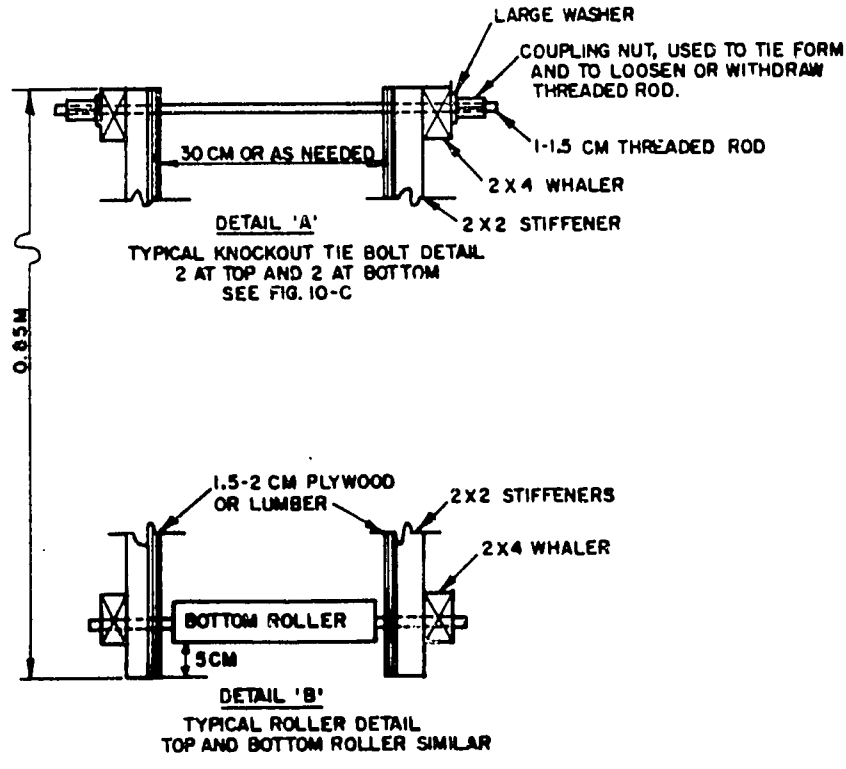

Figure 7. Sliding Form for Ramming

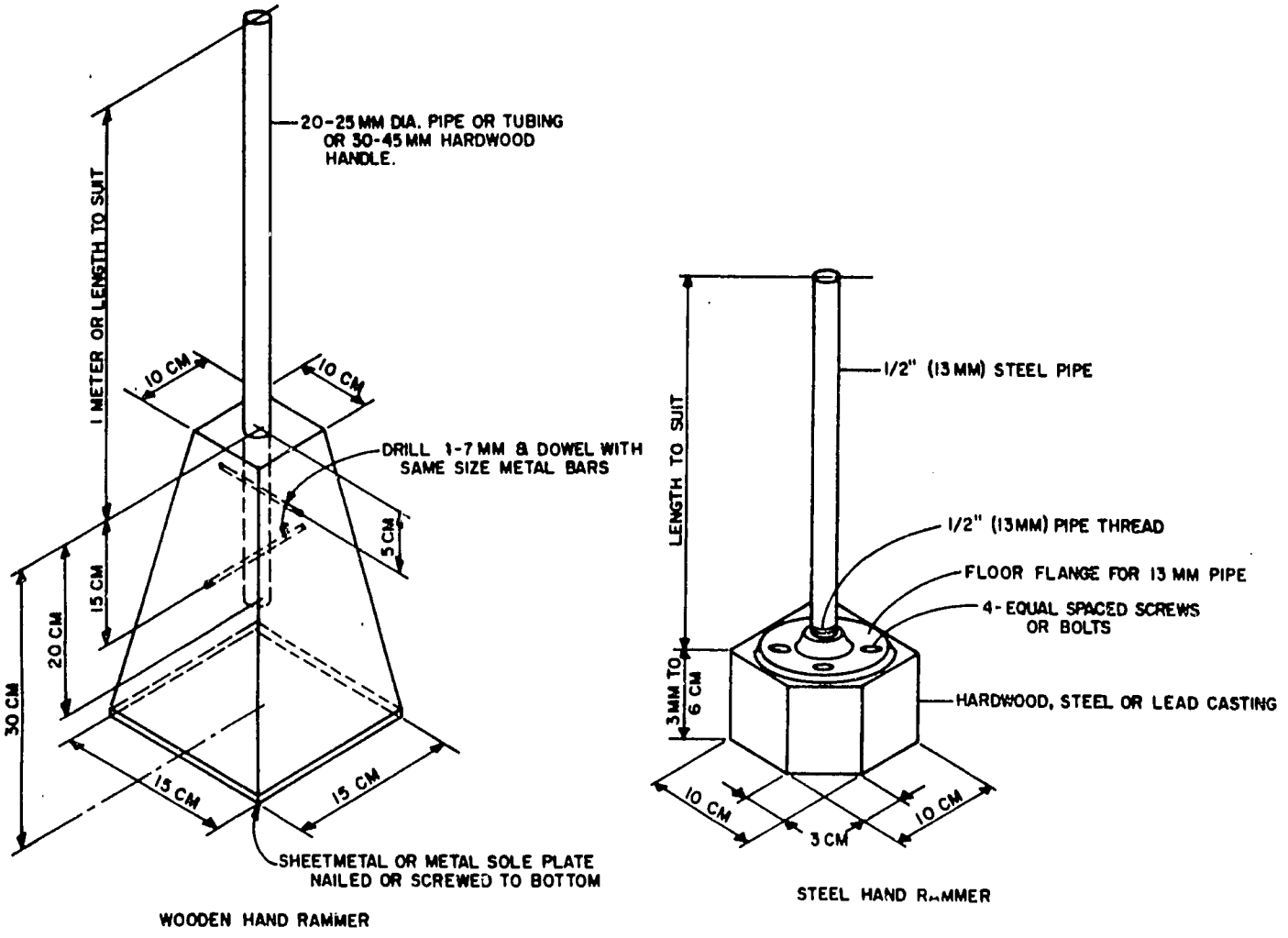

Figure 8. Two Types of Hand Rammers

OPERATING THE PRESS

In order to make good compressed earth blocks and tiles, enough earth mix must be loaded into the mold box to require a *hard pull* on the handle. Make a few test blocks and tiles to determine the quantity of your earth mix which must be loaded into the press to give you this adequate, hard pull

There are three basic operations in making the compressed earth blocks or tiles:

1. Loading the mold box.
2. Compressing the mix.
3. Ejecting the finished product.

1.

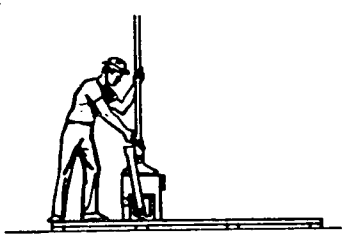

2.

Detailed Movements

1. Place the handle in the rest position and open the mold box by swinging the cover horizontally until its stop is reached; then fill the mold box with the prepared earth.
2. Close the mold box, skimming off excess earth, and bring the handle to the vertical position; then release the latch.
3. Pull down the handle until it is parallel with the ground. This applies the necessary pressure to form the block. If the mold box is properly filled, this should require a *"hard pull"*.

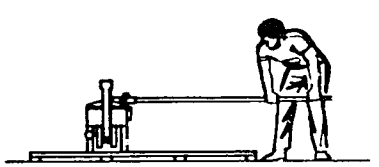

3.

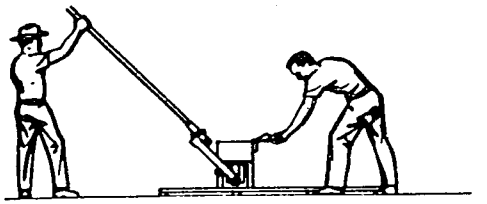

4.

4. Return the handle to the original rest position, swing cover back and open the mold box.
5. Pull down on the handle in the opposite direction until it is parallel with the ground. This ejects the block.

6a *Removing blocks from the press:* Place hands flat at the ends of the block, being careful not to damage the corners or edges and then gently lift the block from the mold box. Place on edge at the curing site.

6b *Removing tiles from the press:* Place one flat hand on top of the tile. Keeping the tile and wooden insert together, slide both off the mold box until the other hand can be placed beneath the insert. Place both on edge at the curing site and then gently separate the insert from the tile.

NOTE: One of the greatest advantages of a compressed earth block or tile is that it can be removed immediately from the press without the use of a pallet.

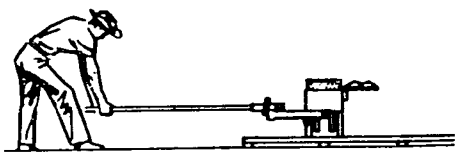

5.

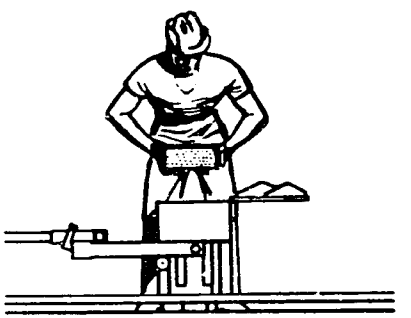

6a

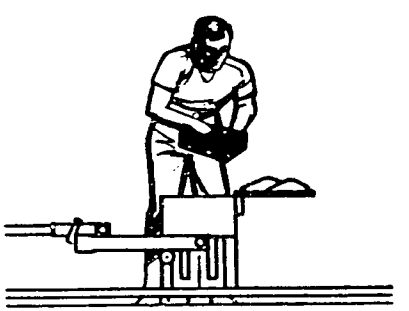

6b

Figure 9. Operating the Block Machine

Source: International Basic Economy Corporation, CINVA-Ram Block Press Manual. (New York, New York: International Basic Economy Corporation, 1959), pp. 5-6.

high-quality rammed earth. The sliding form technique can be adapted for use in residential housing construction by using special corner and wall-intersection forms.

Pressed Block Making

The CINVA-Ram and similar portable hand-operated machines, used in many parts of the world, are good examples of an effective tool for making pressed block. Figure 9 describes the block-manufacturing process. Children and adults can learn this simple process in a matter of minutes.

Simple Soil Tests

Optimum Moisture Test

To test the moisture content of soils and soil-cement mixtures, the thumb-squeeze test is performed, as shown in Figure 10. The moisture content is correct if the soil breaks into two pieces upon applying pressure with the thumb.

Cement/Soil Mix Tests

Making blocks from stabilized earth is a simple process, but it will not be successful unless the soil is properly tested. It would be a serious mistake to treat this step lightly. Scarce money and labor could be wasted and the result unsatisfactory.

Soil is a variable and complex building material. Every sample is different from every other sample. But building blocks can be made successfully from a wide variety of soils.

The tests described here will tell us:

- how much sand and how much clay is in the soil to be used (Particle Determination Test and Compaction Test,); and
- how much cement or lime should be added (Box Test).

Particle Determination Test. This test analyzes the soil to find the ratio of sand to clay and/or silt:

1. Pass the soil through a 1/4" (6 mm) screen.
2. Pour into a wide-mouth jar enough soil to fill the jar half full.
3. Fill the jar with water and cover it.

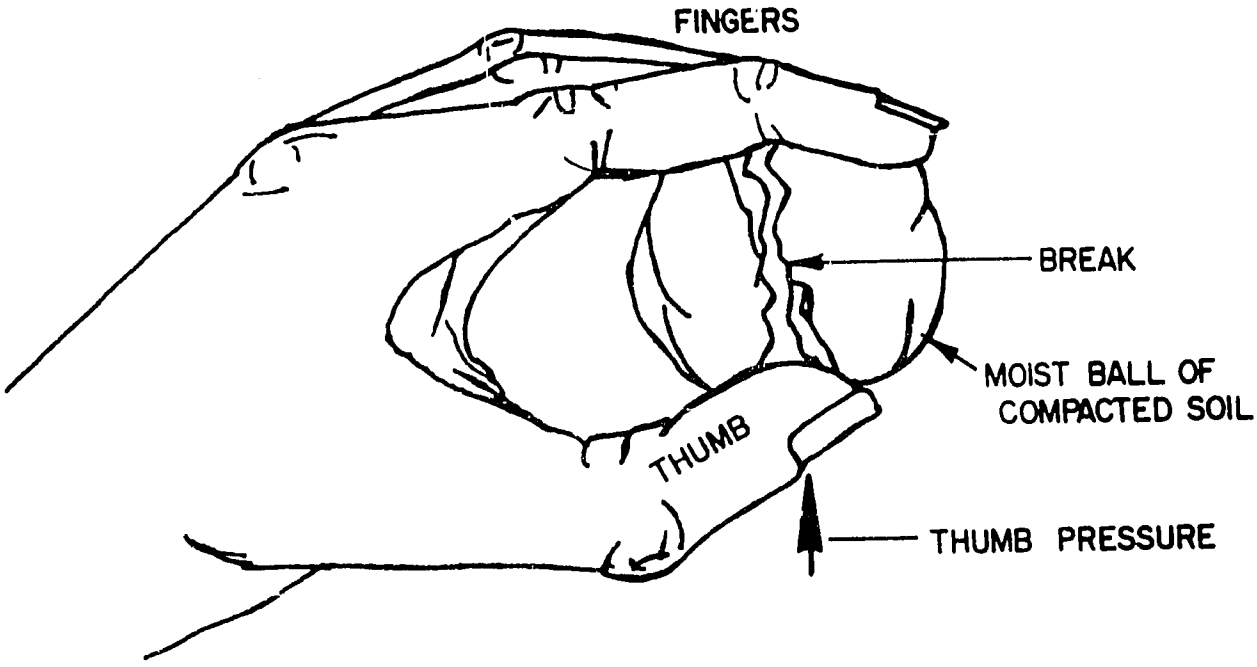

Figure 10. Optimum Moisture Test

4. Add 2 teaspoons of salt to help the clay/silt particles settle faster.

5. Shake the jar vigorously for two minutes.

6. Set the jar on a level spot.

The soil should settle in about half an hour. The sand will settle quickly to the bottom. The clay/silt particles will settle last. Measure the layers to determine the ratio of sand and clay/silt, as shown in Figure 11.

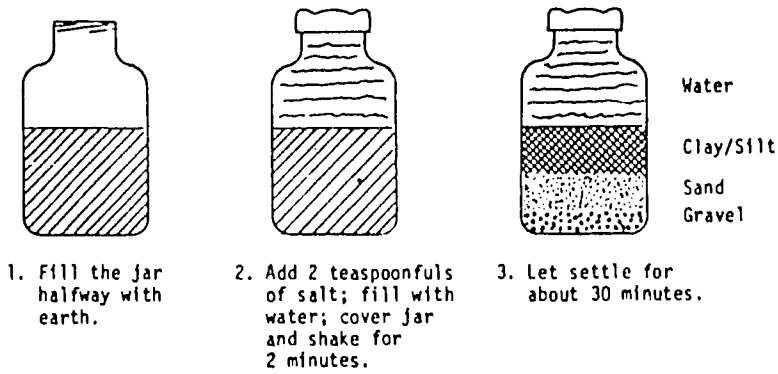

Figure 11. Particle Determination Test

Use soil that is at least one-third sand and between 5 and 30 percent clay/silt. If the soil at hand is not suitable, it can be made suitable by adding sand or clay. Record the percentages of sand and clay/silt in the soil used. This will help in deciding which soil makes the best blocks.

Compaction Test. This test indicates the packing quality of the earth, which depends on the percentage of clay in the sample.

1. Take a handful of dry, screened earth and moisten it until it is damp enough to form a ball when squeezed in the hand, but not so damp that it will leave more than a slight trace of water on the palm.

2. Drop the ball from a height of about three feet onto hard ground. If the ball breaks into a few smaller pieces, the packing quality is good to fair. If it disintegrates, the quality is poor.

Box Test. The box test is a guide to the proper soil-cement ratio. It measures the shrinkage of soil which contains no stabilizer. As shown in Figure 12, the box should have these inside measurements: 24" x 1-1/2" x 1-1/2" (4 cm x 4 cm x 60 cm).

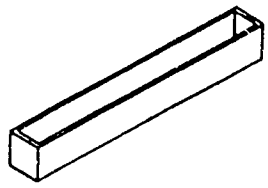

Figure 12. Box for Box Test

1. Oil or grease the inside surfaces of the box thoroughly.

2. Pack the box well with moist soil (previously passed through a 1/4" to 3/8" (6 mm to 10 mm mesh screen). The soil should be moistened to pack well, but it should not be muddy.

3. Tamp, especially at the corners.

4. Smooth off the surface with a stick.

5. Place the box in the sun for three days or in the shade for seven days. It should be protected from rain.

Measure the contraction (shrinkage) by pushing the dried sample to one end of the box.

Shrinkage	Cement to Soil Ratio
Not over 1/2" (15 mm)	1 part to 18 parts
Between 1/2" and 1" (15 mm - 30 mm)	1 part to 16 parts
Between 1" and 1-1/2" (30 mm - 45 mm)	1 part to 14 parts
Between 1-1/2" and 2" (45 mm - 60 mm)	1 part to 12 parts

When lime is used instead of cement use double the amount. Do not use the soil if it has many cracks (not just three or four); if it has arched up out of the box; or if it has shrunk more than 2" (60 mm).

As shown in Table 7, the amount of cement/soil mixture is calculated by soil volume. If the soil contains 90 percent sand, then the amount of cement to soil would be 10 percent.

Table 7. Proportioning Cement Stabilizer to Soil Volume

Soil Content	Proportion of Sand to Soil (Percent)	Ratio of Cement to Soil (Volume)	Amount of Cement to Soil (Percent)
Sand	90	1:10	10.0
Sand	85	1:16.7	6.0
Sand	75	1:12	8.3
Sand	63	1:11.8	8.5
Sand	36-63	1:11	9.0
Sand	<36	1:8.3	12.0
Sand, silt, and clay combined	>80	1:8.3	12.0
Sand, silt, and clay combined	<80	1:6.7	15.0

Note that pure sands or pure clays are not suitable for stabilization with Portland cement. If soil particles lump together, add a dilute solution of ammonia, soda, salt, or sodium silicate to the water.

For floor tiles, make a richer soil-cement mix by adding 20 percent of cement to the soil (or 1:5) for greater strength and resistance to erosion. As discussed in an earlier section (see "Soil Classification," p. 3) of this paper, be sure to take the soil from the B or C horizon or below the organic layer, to ensure adequate stabilization of soil.

The Curing Process

Any building material composed of soil-cement (whether rammed earth or block pressed) must cure slowly until hard. The finished block or wall section is moistened daily for at least one week. While curing, blocks are placed in the shade, and covered to prevent rapid drying and to protect them from rain erosion. Since regions accustomed to primitive adobe construction are unfamiliar with cement curing, a general tendency will be to sun-cure blocks. This is not appropriate for cement. A slow curing is needed.

For road surfaces as described in Figure 6, a sealer should be applied to the finished surface to prevent moisture evaporation. A low-cost white paint is a good sealer. It reflects heat and keeps the material cool. Spray paint works well, too.

Cost-Effectiveness of Soil-Cement Blocks

Countless experiences indicate a cost savings of at least 50 percent over conventional methods. For example, in a housing development proposal submitted to the Government of Indonesia in 1973, construction costs of soil-cement walls were compared with those of brick walls, as shown in Table 8. In that proposal, soil-cement walls were shown to cost less than brick walls.

STATE-OF-THE-ART EARTH STABILIZATION TECHNOLOGIES

Polymers and latexes are now being added to soil mixes to further improve the properties of soil-cement. These compounds provide greater water and freeze-thaw resistance. Inserts have been developed for the block machines to allow spaces for structural reinforcement, enabling structures to better withstand the impact of hurricanes and earthquakes.

III. FUTURE OF THE TECHNOLOGY

NEED FOR FURTHER RESEARCH AND DEVELOPMENT

In September 1981, an international workshop on "Earthen Buildings in Seismic Areas" was held at the University of New Mexico, in Albuquerque, New Mexico, USA. At this workshop, participants identified needs and priorities in response to the worldwide problem of the susceptibility of earthen buildings to destruction from earthquakes. The participants noted the need to:

- establish minimum quality standards, quality control of materials, and quality production methods;
- establish programs with the aim of reducing the vulnerability of earthen buildings to earthquakes;
- increase the emphasis on training local building technicians;
- increase the emphasis on documenting effective public information and housing education techniques;
- develop effective communication tools and training aids for use in program implementation.

Table 8. Comparative Costs for Construction of Soil-Cement Walls Versus Brick-Stucco Walls (1973 Rupees)

Type of Wall	Wall Thickness (Inches)	Amount of Soil (Per M^3)	Number of Bricks/Blocks (Per M^2)	Cost (Rupees)[a]
Brick-Stucco	--			
Bricks			80.0	400
Portland Cement (for mortar joints)				106
Sand (for mortar joints and stucco)				68
Portland Cement (for stucco)				40
Labor				142
Total Costs				756
Soil-Cement Wall	6			
Blocks			33.3	
Soil		.195		10
Portland Cement Mix				172
Labor				67
CINVA-Ram Machine				67
Labor and Dozer (for moving soil)				39
Mortar Mix				92
Labor for Mortar				33
Total Costs				480
Soil-Cement Wall	4			
Blocks			21.3	
Soil		.136		
Portland Cement Mix				7
Labor				110
CINVA-Ram Machine				43
Labor and Dozer				43
(for moving soil)				25
Mortar Mix				59
Labor for Mortar				21
Total Costs				308

[a]In 1973, 410 rupees equaled one U.S. dollar.

One of the many papers addressed further research on stabilized soil-cement for low-cost construction. It emphasized placing reinforcement (such as bamboo or light steel rods or cages) into footings and walls. It further suggested the integration of a mini-mobile industrial system for on-site manufacture and erection of low-cost buildings, using the CINVA-Ram machine as the basic tool. Included was a program to build, test, and analyze a prototype minimum structure that would include soil-cement-reinforced block lintels, tie-beams, walls, and foundations.

Roofing is a major expense. The beams and roofing material can be the most costly items. Ferro-soil-cement structural roof sections could be a complimentary part of the structure. They could be built without high-level skills or technology if the laboratory techniques were developed and tested. The prototype structure could serve as a model for constructing other low-cost permanent buildings.

IV. CHOOSING THE APPROPRIATE TECHNOLOGY

In deciding whether to use cement stabilized soils or not, one must first determine:

- what skills are available;
- what materials are accessible for use;
- what standards have to be met by the local community;
- what tools and equipment are available;
- what the economics of the situation are;
- what the overall objectives are;
  - to build as cheaply as possible;
  - to employ as many people as possible;
  - to develop permanent skills and jobs;
  - to provide permanent low-maintenance structures;
- what the anticipated scale for production is;
- what the prevailing customs or personal acceptable standards of housing and construction are; and
- what organizations are interested in sponsoring mutual-aid or self-help initiatives.

BIBLIOGRAPHY

Adaska, W.S. et al. "Soil-Cement for Electric Power Plants." Paper presented at the American Power Conference, Chicago, Illinois, 22 April 1980.

Ahrens, Chris. Manual for Supervising Self-Help Home Construction with Stabilized Earth Blocks Made in the CINVA-Ram Machine. Kanawha County, West Virginia, 1965.

Ahrens, Chris. Stabilized Earth Construction in Cold Climates. 1976.

Akray, S. Investigation on the Compressive Strength of Various Stabilized Clay Adobe Bricks. Ankara, Turkey: Middle East Technical University, 1965.

American Society for Testing and Materials. Annual Book of ASTM Standards, 12 vols. Vol. 4.08: Soils. Philadelphia, Pennsylvania: American Society for Testing and Materials, 1984.

American Society for Testing and Materials. Concrete and Mineral Aggregates. ASTM Part 10. Philadelphia, Pennsylvania: American Society for Testing and Materials, 1968.

Boatwright, J.H. How to Get Waterproofing Substances from Plants. Arlington, Virginia: Volunteers in Technical Assistance, 1977.

Cain, A.; Afshar, F; and Norton, J. "Indigenous Building and the Third World." Architectural Design 45 (April 1975): 207-24.

California State University. International Institute of Housing Technology. The Manufacture of Asphalt Emulsion Stabilized Soil Bricks and Brick Maker's Manual. Fresno, California: California State University, 1972.

Clough, R.H. A Qualitative Comparison of Rammed Earth and Sun-dried Adobe Brick. Albuquerque, New Mexico: University of New Mexico Press, 1950.

Commonwealth Experimental Building Station. "Choice of Soil and Methods of Construction." SB 13. Earth Wall Construction. Chatswood, Australia: Commonwealth Experimental Building Station, 1951-1952.

Commonwealth Experimental Building Station. "Pise (Rammed Earth)." SB 18. Earth Wall Construction. Chatswood, Australia: Commonwealth Experimental Building Station, 1951-1952.

Commonwealth Experimental Building Station. "Adobe (Puddled Earth)." SB 20. Earth Wall Construction. Chatswood, Australia: Commonwealth Experimental Building Station, 1951-1952.

Commonwealth Experimental Building Station. "Stabilized Earth." SB 22. Earth Wall Construction. Chatswood, Australia: Commonwealth Experimental Building Station, 1951-1952.

Fitzmaurice, R. Manual on Stabilized Soil Construction for Housing. New York, New York: United Nations, 1958.

Germin, A. "The Endurance of Earths as Building Material and the Discreet But Continuous Charm of Adobe." M.E.T.U. Journal of the Faculty of Architecture 5 (Spring 1979).

Jones, C.W. Effect of a Polymer on the Properties of Soil-Cement. Bureau of Reclamation Report REC-OCE-20-18. Denver, Colorado: Bureau of Reclamation, 1970.

Kirkham, U.E. How to Build Your Own Home of Earth. Oklahoma A and M Engineering Experiment Station Publication 54. Stillwater, Oklahoma: Oklahoma A and M Engineering Experiment Station, 1943.

Lunt, M.G. "Stabilized Soil Blocks for Building." Overseas Building Notes No. 184. Garston, England: Building Research Station, February 1980.

Mehra, S.R. Use of Rammed Cement Soil in Large Scale Housing Construction in East Punjab. Bombay, India: Government of India Press, 1948.

Metalibec Ltd. CINVA-Ram Block Press Manual. New York, New York: International Basic Economy Corporation, 1959.

Middleton, G.F. Earth Wall Construction. Sydney, Australia: Commonwealth Experimental Building Station, 1949.

Portland Cement Association. Soil-Cement Construction Handbook. Chicago, Illinois: Portland Cement Association, 1956.

Portland Cement Association. Soil-Cement Laboratory Handbook. Chicago, Illinois: Portland Cement Association, 1956.

Portland Cement Association. Soil Primer. Chicago, Illinois: Portland Cement Association, 1956.

Razani, R., and Behpour, L. Some Studies on Improving the Properties of Earth Materials Used for the Construction of Rural Earth Houses in Seismic Regions of Iran. Shiraz, Iran: Pahlavi University, 1970.

South Dakota State College. Department of Agricultural Engineering. Rammed Earth Walls for Farm Buildings. Bulletin No. 277. Brookings, South Dakota: South Dakota State College, 1938.

Volunteers in Technical Assistance. Making Building Blocks with the CINVA-Ram Block Press. Arlington, Virginia: Volunteers in Technical Assistance, 1975.

United Nations. Department of Economics and Social Affairs. Soil-Cement - Its Use in Building. New York, New York: United Nations, 1964.

U.S. Agency for International Development. Handbook for Building Homes of Earth. Action Pamphlet No. 4200.36. By Lyle A. Wolfskill, Wayne A. Dunlop, and Bob M. Callaway. Washington, D.C.: Peace Corps, December 1979.

U.S. Department of Agriculture. Building with Adobe and Stabilized Earth Blocks. Leaflet No. 535. Washington, D.C.: Government Printing Office, 1968.

U.S. Department of Commerce. National Bureau of Standards. Methods for Characterizing Adobe Building Materials. Technical Note No. 977. Washington, D.C.: National Bureau of Standards, June 1978.

U.S. Library of Congress. Division of Bibliography. List of References on Pise de Terre and Adobe Construction. Washington, D.C.: U.S. Library of Congress, 1931.

SUPPLIERS

SUPPLIERS OF TEST EQUIPMENT

SoilTest Inc., 2205 Lee Street, Evanston, Illinois 60202, USA

TestLab/GDI Inc., 130 Buchanan Circle, Pacheco, California 94553, USA

SUPPLIERS OF CINVA-RAM BLOCK-MAKING MACHINES

CARE, 660 First Avenue, New York, NY 10016, USA

Metalibec Ltda., Apartado Aereo 11798, Bogota, Colombia, SA

Schrader Bellows, 200 West Exchange Street, P.O. Box 631, Akron, Ohio 44309, USA