PN-AAS-657 39797

ASSESSMENT OF TECHNOLOGICAL READINESS

ROUTES FROM NATURAL-GAS TO TRANSPORT FUELS

Prepared for: Office of Energy
Agency for International Development
Washington, D.C. 20523

Prepared by: Philip S. Verity, Chemical Engineer
Robert B. Rollins, Mechanical Engineer
Process Plants Consulting Services
P.O. Box 16808
Fort Lauderdale, FL 33318

October 1, 1984

TABLE OF CONTENTS

1.0 SUMMARY

1.1 Purpose and Scope
1.2 Findings
1.3 Observations
1.4 Institutional Aspects

2.0 NATURAL GAS UTILIZATION OPTIONS

2.1 The CNG (Compressed Natural Gas) Option
2.2 Methanol-based Options

2.2.1 Methanol/Gasoline blends
2.2.2 Methanol as gasoline substitute
2.2.3 Methanol as diesel-fuel substitute
2.2.4 Methanol to gasoline
2.2.5 Methanol to diesel fuel, kerosene and gasoline

2.3 The Fischer-Tropsch Route

3.0 TECHNICAL ASPECTS OF AVAILABLE ROUTES

3.1 Methane (CNG)
3.2 Syngas Manufacture

3.2.1 Steam Reforming
3.2.2 Catalytic Partial Oxidation
3.2.3 Partial Oxidation
3.2.4 Utilization of Syngas

3.3 Methanol-based Routes

3.3.1 Methanol production
3.3.2 Methanol direct-use options
Blending with gasoline
Substitute for gasoline
Substitute for diesel fuel
3.3.3 Methanol conversion to gasoline
3.3.4 Methanol conversion to distillates

3.4 The Fischer-Tropsch Route

4.0 THE POSITION OF U.S. A/E FIRMS

5.0 TECHNOLOGY TRANSFER CONSIDERATIONS

Continued next page

TABLE OF CONTENTS

Figure 1 - Routes to Transport Fuels from Natural Gas

Table I - Properties of Methanol, Gasoline and Diesel Fuel

Table II - MCGD Product Qualities

Appendix A - Terms of Reference

Appendix B - Sources of Information

Appendix C - Methanol as a Diesel Fuel

1.0 SUMMARY

1.1 PURPOSE AND SCOPE

The developing countries of the Third World depend increasingly on imported petroleum for their major source of commercial energy, particularly for automotive-engine and industrial fuels. At the same time, many developing countries possess significant natural gas resources.

Over the past 25 years, experience has been accumulating in the substitution of petroleum transport fuels by natural gas and products derived therefrom. This has come about either through direct use of the methane component of natural gas as a transport fuel, or through the conversion of this component to a liquid fuel product (methanol) which can substitute, after engine modifications, for conventional transport fuels. More recently, experience has begun to accumulate in the conversion of the methane component (via methanol) to liquid fuel products (gasolines, kerosenes, and diesel fuels) equivalent to those conventionally produced by refining petroleum, thereby avoiding all need for engine modification.

Finally, there is a 30-year accumulation of experience in South Africa in the production of petroleum-equivalent transport fuels from coal, that can be relevant to a natural gas source. The reason is the production of a common intermediate material from either coal or natural gas, namely synthesis gas -- a mixture of carbon monoxide and hydrogen. Processing beyond synthesis gas is then largely independent of whether coal or natural gas has been the source.

We undertook the present study at the request of the Office of Energy in the U.S. Agency for International Development. Terms of Reference are summarized in Appendix A. The purposes of the study are:

(a) to identify and describe the options for utilizing natural gas to produce transport fuels, and

(b) for those options that are emerging, to assess the technological readiness for utilization in a developing country.

We understand that the intent is to use the results of this study to explore what further steps ought to be considered to develop the potential of the options identified, in terms of alleviating dependence of the developing countries on imported petroleum.

The scope of the work given to us was to focus on the options that involve retrofit of engines both in vehicles now in use, or in vehicles to be manufactured, and on the options that avoid such retrofit by the production of transport fuels from natural gas equivalent to those conventionally made from petroleum. We were to discuss these options in terms of technological readiness and to avoid at this time any consideration of costs. Also, we were to eliminate LNG (the production and export of liquified natural gas) as an option, since this is more of a financial and economic matter than a technological one. It could be considered at a later stage.

A list of our sources of information for the study is in Appendix B.

1.2 FINDINGS

This section summarizes the principal findings of the study.

1.2.1 Options Identified

Three basic options appear worthy of attention. They are the following:

- Use of compressed natural gas (CNG). Maximum use is made of the energy content of the natural gas. Vehicle and engine retrofit is fairly significant and a new supply and distribution system needs to be established for the gas.

- Use of neat (100%) methanol. Part of the energy content of the natural gas is lost during conversion to methanol. Engine retrofit is very significant. Existing fuel supply and distribution system can be adapted.

- Production of petroleum-equivalent liquid transport fuels. Part of the energy content of the natural gas is lost during conversion. Engine retrofit is eliminated and existing fuel supply and distribution systems can be used.

For the last option two different approaches are available. In the Fischer-Tropsch approach, as is practised by SASOL in South Africa, a broad spectrum of products is made which involves complex refinery-type processing and potential marketing difficulties for some of the byproducts. In the synthetic zeolite catalyst approach, as is practised by Mobil Oil Corporation in New Zealand, the product desired constitutes the bulk of the yield and byproducts are insignificant.

1.2.2 CNG Option

This option for the utilization of natural gas involves direct use of the compressed gas as a transport fuel primarily for heavy vehicles. Gas is carried under pressure in steel cylinders. Advantages include the absence of a complex and costly processing plant, plus practically complete utilization of the energy content in the natural gas. Disadvantages include low mileage per cylinder, excessive dead weight, and relatively poor engine operation. Pipelines are required to distribute the gas. Possible safety hazards may exist in an unsophisticated environment. The CNG system has many advocates, however, owing to its inherent simplicity.

1.2.3 Methanol as Fuel

This option for the utilization of natural gas involves its conversion to methanol via well-established processes. Use of methanol directly as a transport fuel, has the advantage of limiting the complexity (and cost) of the natural-gas processing system. Methanol becomes the final product. Methanol has a high octane number and performs very well in blends (in the order of 5%) in gasoline. No engine modifications are necessary. The chief disadvantage is the very small amount of (imported) gasoline that can be displaced by such blends.

Neat methanol can also be used as a direct substitute for gasoline. Some engine modifications are then required and a separate methanol distribution infrastructure becomes necessary.

Methanol can be used as a substitute for diesel fuel, in spite of its very low cetane number. Extensive engine modifications, amounting essentially to new engine design, are required, but successful tests are currently being made in the U.S.A. and in West Germany. A great advantage of methanol as a diesel fuel is the reduction in smoke and particulates emission.

There is an enthusiastic and growing group of believers in methanol as the "clean fuel of the future."

1.2.4 Petroleum-Equivalent Liquid Fuels

Two approaches are available.

Fischer-Tropsch Approach. At the present time, the only commercially-tested route for making synthetic petroleum-equivalent transport fuels (gasoline, jet fuel and diesel) is via the Fischer-Tropsch process currently in large-scale operation at the Sasol complex in South Africa. Feed to Fischer Tropsch at the Sasol plant is syngas (H_2 and CO) made by gasification of coal. Proven technology (steam reforming) is available to make a somewhat similar syngas from natural gas. Thus, it already appears to be at least technologically feasible for a nation with adequate natural gas resources to become essentially independent of petroleum imports.

Fischer Tropsch employs a rugged, non-selective catalyst which converts synthesis gas directly to a wide-boiling mixture of hydrocarbons and oxygenated compounds from which petroleum-equivalent products can be recovered only by further complex refining. Byproducts and losses cannot be avoided.

Synthetic Zeolite Catalyst Approach. In recent years a quite different synthesis technology has begun to emerge, based on the use of new, extremely selective catalysts which are able to convert methanol (which can readily be made from syngas by a well-established process) directly to high-grade petroleum-equivalent transport fuels with only minimal byproducts. The development of this new and advanced technology appears to make it more attractive than ever for a nation with adequate reserves of natural gas to reduce, or even eliminate, its dependence on imported petroleum. The new catalysts have been developed primarily by Mobil Oil Corporation. They consist of synthetic crystalline zeolites, designated by Mobil as ZSM-5. These catalysts appear to stand up very well to repeated regenerations and in action are extremely specific; that is, desired chemical reactions are favored, while unwanted competing reactions are largely excluded.

1.2.5 Zeolite Catalyst Development

Synthetic crystalline zeolite catalysts have been under development by Mobil for the past 25 years. Industrial experience has accumulated in their use in several established Mobil processes, including petrochemical conversion - isomerization of xylene aromatics - and petroleum distillate dewaxing. In the latter process, the zeolite catalyst selectively adsorbs and cracks only the long straight-chain wax molecules, leaving the rest of the molecules unaltered. The manufacture of ZSM synthetic zeolite catalyst is very tightly controlled by Mobil. No manufacturing licenses have been granted. Mobil will lease, rather than sell, the catalyst to plant operators. The catalyst is known to be expensive (either to rent or to buy) but no figures have been released.

1.2.6 MTG Process Sequence

The Mobil MTG (Methanol-To-Gasoline) process, based on ZSM-5 catalyst, found its first commercial application in the 14,500 BPSD natural-gas-to-gasoline project now being built in New Zealand for startup in 1985. Significantly, Mobil has a considerable equity position (25%) in this project. The natural gas is first converted, via synthesis gas, to methanol using conventional processing. This methanol constitutes the charge to the MTG process. The methanol is converted first to dimethyl ether and then to light olefins. These olefins, as a second step of converion, combine immediately on the catalyst to form molecules in the gasoline boiling range. Light (low-molecular-weight) gases are recycled to increase gasoline yield.

1.2.7 MOGD Process Sequence

Mobil is undertaking to separate the two steps which occur simultaneously in the MTG process in order to control the final product and make distillates (kerosene and diesel fuel) as well as gasoline. Both steps use ZSM-5 catalyst. The first step, methanol conversion to low-molecular weight (C_3 through C_6) olefins, is still only recently out of the laboratory. Mobil expects, however, to have a commercial process ready for licensing within 18 months. The second step, from light olefins to gasoline, jet fuel or diesel oil as required, is known as the MOGD (Mobil Olefins to Gasoline and Distillate) process and has already been developed and tested on a large scale in one of Mobil's refineries, using light olefins from a Fluid catalytic cracking unit as feed stock. The diesel fuel product is slightly unsaturated and requires hydro-treating (hydrogenation) to raise the cetane number.

1.2.8 Thermal Efficiency

A plant to convert natural gas via methanol and, say, the MOGD process, to petroleum-equivalent transport fuels, might be 60-65% thermally efficient overall. Most of the energy loss is unavoidable and is inherent to the process. For comparison, a high-conversion oil refinery to make a comparable product mix using hydrocracking might be 85% thermally efficient. These figures are necessarily approximate at this time.

1.3 OBSERVATIONS

The present study has been restricted to examining the technologies currently available for conversion of natural gas to transport fuels. Our findings show that the Fischer-Tropsch process is already commercially proven while other more modern processes that may be more cost-attractive wait in the wings. Also, there are other options (CNG and methanol) that could be implemented in the short term. We think it appropriate, therefore, to discuss briefly our views and opinions on the next steps that should be considered to develop the subject of synthetic transport fuels and thereby assist planners and decision makers in developing countries in how to allocate uses of their natural gas resources for maximum long- and short-term benefit.

1.3.1 Cost and Economic Evaluation

In examining the technology of natural gas conversion, the present study is not concerned with capital and operating costs or economic evaluation except in a qualitative way. The next step should be to develop approximate, but comparable, order-of-magnitude investment and operating costs for each of the options discussed in the report. This cost and associated economic analysis should preferably be done with reference to a specific developing country, selected on the basis of current interest in gas utilization projects. Savings in foreign exchange should be estimated. A parametric study should be included showing the effect of varying the price of the natural gas delivered to the synthetic-fuels plant.

1.3.2 Wait-and-See Attitude

In view of the imminent startup of the New Zealand MTG project (now scheduled for mid-1985), a "wait-and-see" attitude is well justified in regard to this process. We recommend an even more cautious approach in regard to the MOGD processing sequence. One vital step in this latter sequence (methanol to light olefins) is only just out of the laboratory and will not be tested on a semi-commercial scale for at least another year.

1.3.3 Tie-In With An Existing Refinery

It is very desirable that any synthetic-fuels plant based on natural gas should be located in, or near, an existing oil refinery, if this can be done under the particular circumstances. In addition to the obvious savings in offsites, management, etc. for a combined plant as compared with a grass-roots location, there is also the real possibility of integrating the operations of the two plants with advantages to both. For example, the refinery might supply otherwise unwanted light olefins to a MOGD unit to make additional high-grade diesel fuel. It could even pay, in some circumstances, deliberately to make additional light olefins from surplus LPG and other refinery stocks.

Well-established processes are available for this purpose. Furthermore, the MOGD diesel fuel, due to its unique molecular structure, high cetane number and very low sulphur content, is itself a premium product that could be used to extend lower-quality refinery stocks. If the refinery had a hydrogen plant, the waste CO_2 from the shift stage would be available to make additional methanol, see Section 3.3.1c below. It is of interest to note that neither the oil-from-coal Sasol plant in South Africa nor the oil-from-gas plant in New Zealand are located near to an oil refinery. Instead, both are grass-roots plants, located near sources of raw material: the Sasol plant near the coal mines and the New Zealand plant in a remote area facing the offshore gas field.

1.3.4 Methanol as Substitute for Diesel Fuel

We have noted significant enthusiasm for methanol as the "clean fuel of the future", especially for heavy vehicles. A great deal of engine design work and vehicle testing is currently under way in several countries. We believe that this use of methanol is an option that no developing country with an adequate supply of natural gas can afford to overlook, since the processing route from natural gas to methanol is fully developed on a commercial scale and is immediately available.

1.3.5 CNG Option

This option also should not be overlooked in any future study. The evident clumsiness of using compressed gas as a fuel in a vehicle and its inherent disadvantages such as low mileage per cylinder of gas, excess dead weight, reduced engine performance, potential safety hazards, etc. should not, in our opinion, be allowed to mask the essential simplicity of the system and, in particular, the absence of a costly processing plant. In a developing country the CNG system has the advantage that it can be introduced gradually without the huge initial foreign exchange investment required by other options involving chemical conversion of the natural gas. These foreign exchange savings become available to pay for vehicle and engine modifications and for the necessary gas distribution system.

1.3.6 Aircraft Jet Fuel

Jet fuel can be made from natural gas via the methanol-MOGD route. Nevertheless, in our opinion it would be wiser, at least initially, for a developing country to plan to get supplies of this product from a conventional petroleum source, in view of the critical nature of the application.

1.3.7 Fertilizer (Ammonia) Option

Most developing countries need ammonia-based fertilizer. Natural gas is the ideal raw material for manufacture of ammonia and this use for indigenous natural gas is usually quickly recognized. This is a competitive use and no doubt would enter into pricing negotiations for a natural gas supply.

1.4 INSTITUTIONAL ASPECTS

In this section we deal very briefly with certain aspects of the synthetic-fuels problem that are essentially non-technical in nature, and which, therefore, really fall outside the scope of this report. We refer to these subjects here because of their importance in considering the pattern of natural gas utilization that best fits a country's needs.

1.4.1 National Energy Plan

The success of a fuels-from-natural-gas project in a developing country will, in our opinion, depend very largely on how well the project fits in with, and is part of, the country's over-all energy use plan, and perhaps vice-versa. A viable energy plan should include a comprehensive study of all available options in terms of their impact on government operations, energy user as well as energy supplier interests, private and public sector interests, and no doubt others.

Our experience in similar situations in developing countries has shown that adequate cooperation among parties is often very difficult to obtain. The New Zealand Government set a good example, in our view, by making comprehensive studies of all available options before going ahead with their gas-to-gasoline project using the MTG process.

1.4.2 Public Expectations

It is quite unlikely that any project for making transport fuels from surplus natural gas in a developing country, once identified, will eliminate petroleum imports entirely, at least initially. It would be unrealistic to claim otherwise. In many cases the best that such a plant could be expected to achieve would be to reduce significantly the country's reliance on imported petroleum.

1.4.3 Natural Gas Reserves

It is essential that an adequate, proven reserve of surplus natural gas should be available and assured before a synthetic-fuels project is undertaken. In the case of the New Zealand project, we understand that a 30-year supply of gas at full plant throughput was stipulated.

1.4.4 LNG Option

Although the LNG option is outside the terms of reference of the present study, this option involving liquifaction of the natural gas and its sale abroad to developed countries should not be overlooked. Foreign currency from sale of the gas can be used to purchase petroleum. Capital investment is extremely high, however, and the option is only economic on a very large scale. Its viability depends on assurance of long-term markets at an adequate price.

2.0 NATURAL GAS UTILIZATION OPTIONS

The various possible routes from natural gas to transport fuel are shown in Figure 1. In this Section, assessments are made of the readiness of the technology involved in each route or option, and of the suitability of such technology for transfer to a developing country. Technical discussion of these options will be found in Section 3.0. The options are presented below in the order that they are listed in the right-hand column on Figure 1, starting from the top.

2.1 The CNG Option

In the CNG (Compressed Natural Gas) option, the natural gas itself, after removal of contained liquids and of impurities such as sulphur compounds, is used directly as a transport fuel displacing gasoline. The gas is compressed into steel bottles which are carried by the vehicle. Technology involves the pipeline network to distribute the natural gas, local compressors, the steel bottles to hold the CNG and some necessary engine modifications. Natural gas as CNG is not suitable for diesel engines, as far as we could determine.

The technology of the CNG option may be considered "state of the art," suitable for immediate transfer to developing countries.

Advantages of the CNG option include the fact that no capital-intensive processing plants are required and also that the full calorific value of the natural gas is available for use in the engine. In all the other options discussed below there is very substantial loss (35% to 40%) of calorific value in going from natural gas to transport fuels.

We encountered considerable enthusiasm for the CNG option in the context of its application to developing countries. This enthusiasm was based on the inherent simplicity of the technology, the complete absence of complex processing facilities as required in all the other options, and the fact that significant CNG applications already have been made throughout the world.

2.2 Methanol-Based Options

The next five options listed in Figure 1 all involve conversion of the natural gas to methanol as a first step. The following comments apply equally to all the methanol-based options.

Until recently, methanol was generally considered to be a petrochemical rather than a fuel. Commercial demand for fuels is at least an order of magnitude greater than for petrochemicals. Large-scale use of fuel methanol will mean a major need to expand methanol production.

The two consecutive process steps for converting natural gas to methanol, i.e., steam reforming and methanol synthesis (low pressure ICI process), are well established. Plants have been built all over the world. In our judgment, the technologies involved are completely suitable for installation

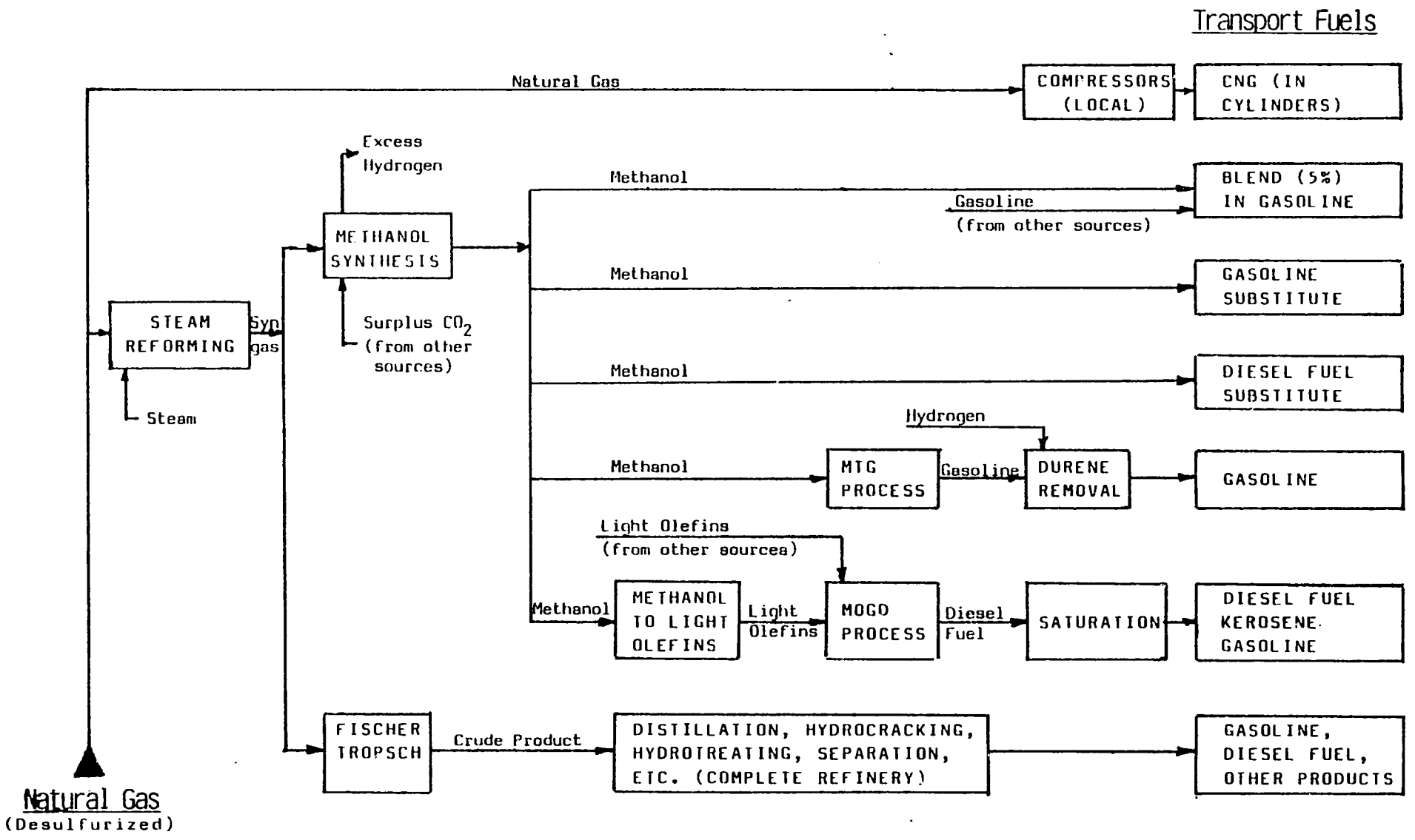

Routes to Transport Fuels from Natural Gas

Figure 1

in developing countries. Plants rated at 2000 to 2750 st/d of methanol are considered to be the largest as limited by maximum practical equipment size. Methanol plants consisting of multiple, maximum-size units are likely to be involved in any new fuels-from-natural-gas project using the methanol route.

The methanol can be used in a number of different ways, as discussed in the following sections. See also Figure 1.

2.2.1 Methanol/Gasoline Blends

No additional process technology is involved for this option other than methanol production. Our readiness assessment, therefore, is positive. Blends with 5% methanol can be distributed through the normal, existing gasoline infrastructure, and no engine modifications are required. Care must be taken to avoid water entering the gasoline distribution system. Such blends have been tested commercially in several parts of the world.

A major disadvantage of the 5% methanol-in-gasoline option is the very small amount of total (imported) gasoline that is displaced by the indigenously-produced methanol. This probably explains why we found little enthusiasm for this option particularly as it might apply to a developing country where gasoline demand is generally quite limited.

2.2.2 Methanol as a Gasoline Substitute.

No additional process technology is involved other than methanol production, but there is a degree of technology required for the engine modifications necessitated by the conversion from gasoline to neat (100%) methanol as fuel.

The engine modifications are not particularly extensive or costly. The distribution and storage system for methanol must be completely separate from any gasoline system. We assess the technology involved in the engine modifications as quite suitable for transfer to developing countries. Caution regarding the modifications is required because methanol is corrosive and there is the need to avoid the use of certain metals and plastics. For example, special hoses are necessary. Fuel tank capacity needs to be increased if driving range between fill-ups is to remain unchanged.

Accordingly, we were not surprised to find considerable enthusiasm in regard to methanol as a substitute for gasoline, much more than for the 5% blend option.

2.2.3 Methanol as Diesel Fuel Substitute

Again, no additional process technology other than methanol production, is involved. On its face, methanol appears to be an unsuitable fuel for diesel engines due to its very low cetane number. The technologies currently under study are either (1) extensive engine re-design to permit operation on pure methanol or on methanol together with some diesel fuel (dual-injection

engines), or (2) use of additives in the methanol to improve cetane number and reduce the necessary engine modifications.

An advantage of methanol as a diesel fuel is that it greatly reduces exhaust emissions, especially the particulates that have been linked with smog and cancer. We found great enthusiasm in certain circles for methanol as the "fuel of the future", particularly for heavy vehicles that are usually diesel-driven.

Engine testing of methanol fuel in vehicles is underway in the U.S. and in West Germany, but only limited publicity has been given. Additives to the methanol as well as engine redesign are being studied, primarily the latter.

Although we assess the situation as optimistic for near-term readiness, the technologies themselves are not ready yet for immediate transfer to developing countries. Nevertheless, in any feasibility study for conversion of natural gas to transport fuels undertaken for a particular developing country, a full investigation of this option, applying site specific conditions, definitely should be included.

2.2.4 Methanol to Gasoline

We assess the readiness of the technology, which is basically the Mobil MTG process used in the New Zealand project, as positive. It appears suitable for transfer to a developing country. We did, however, encounter some criticism of the MTG process on the grounds that the use of gas recycle for reaction heat removal leads to very large and costly equipment and to high gas compression costs. There was, in fact, some feeling that the MOGD process which uses liquid recycle (see next option below), would ultimately displace the MTG process entirely. Both processes are based on Mobil ZSM-5 catalyst.

Our opinion is that feasibility studies should include the MTG process on the basis of the expertise available today. Serious commitment of funds toward actual equipment purchase and construction should be delayed until the results of initial operations are known for the New Zealand plant, due to go on-stream in 1985. Questions such as catalyst life, effect of repeated catalyst regeneration, unit operating techniques, etc., that are especially important when considering a new plant to be located in a developing country, will be answered at that time.

2.2.5 Methanol to Diesel Fuel, Kerosene and Gasoline

The final methanol option (see Fig. 1) has the great advantage of being able to produce high-quality gasoline, jet fuel or diesel oil, as may be required. The emphasis in the present study is on diesel fuel since this is the transport fuel generally in greatest demand in developing countries. As will be discussed later, in quality the products in this option are equivalent, or even superior, to corresponding products derived from petroleum. The option involves three consecutive processing steps.

The first step in the processing sequence, the Mobil methanol-to-olefins process using ZSM-5 catalyst (see Fig. 1), is at present hardly out of the laboratory and thus is definitely not yet ready for commercial exploitation. A test program has been scheduled beginning in January 1985, continuing for six months, on the 100 BPSD Fluid-bed pilot plant presently located in West Germany. Mobil estimates that the process will be available for commercial use within 18 months.

We believe the methanol-to-olefins process should prove feasible, considering Mobil's history of success with the ZSM-5 catalyst in general. However, until the process has been fully tested on a large scale we can only assess the technology as not yet ready for transfer to developing countries.

The second step in the processing sequence, the MOGD (Mobil Olefins to Gasoline and Distillates) technology for converting light olefins (C_3 thru C_6) into diesel fuel, kerosene or gasoline, has been tested on a large scale in a Mobil refinery. It has not yet been operated commercially. Nevertheless, our assessment of the readiness of the technology is positive. If a suitable light-olefin feed were available, say from a refinery, we would have no hesitation in assessing the MOGD technology, by itself, as suitable for use in a developing country.

The third step in this option, saturation of the raw MOGD diesel-fuel product to improve cetane number, employs well established refinery technology. We have no hesitation in assessing this technology as completely ready for transfer to a developing country.

2.3 The Fischer-Tropsch Route

We assess the readiness of the technology involved in the Fischer-Tropsch route as fully developed and ready. A modern Fischer-Tropsch plant with associated processes is successfully operating on a large scale at the huge Sasol synthetic-fuels-from-coal complex in South Africa. There is no doubt that this complex works, and that it works well. Moreover, the new Synthol modification of Fischer Tropsch, developed by Sasol, is a success.

We believe that the single most negative aspect of Fischer-Tropsch technology is the non-selective character of the catalyst employed. A wide variety of products is made (from synthesis gas) which introduces complex refinery processing and the likelihood of unmarketable byproducts. On the other hand, the technology has the very positive aspect of being ready for transfer. Thus, Fischer Tropsch certainly is a viable route and must be included in any comprehensive comparison of options.

We expect that in the multi-year time frame that will exist for a major change in the energy supply pattern to occur in a developing country, technology based on selective catalysts (e.g. the Mobil zeolites) will develop to a state of technology readiness for transfer, and will win out in any comparison based on the production of petroleum-equivalent transport fuels from natural gas. We suspect that this perception of ours explains why we found a split of opinion among the architect-engineering firms we interviewed regarding the future of the Fischer-Tropsch processes in general.

3.0 TECHNICAL ASPECTS OF AVAILABLE OPTIONS

So far, we have shown the major routes available for making transport fuels i.e., fuels for vehicles, from natural gas. The routes vary from simple compression of the gas into vehicle-carried cylinders (CNG) to complex, multi-step chemical processing for making the synthetic equivalents of diesel, kerosene and gasoline fuels. Chemical processing always involves substantial loss of the original calorific value of the natural gas, see below.

Natural gas leaving the wellhead consists mostly of methane (C_1), together with varying amounts of heavier paraffinic hydrocarbons, depending on the source of the gas. In addition, some hydrogen sulfide (H_2S), mercaptans, carbon dioxide, nitrogen and other components may be present. Wellhead compositions vary widely from one field to another. It is usual practice to process the raw gas at a special gas plant, located near the wellhead, to recover valuable products and to remove foul-smelling sulphur compounds. Products include: LPG (C_3 and C_4); natural gasoline (C_5+) used for blending; and ethane (C_2), an excellent feedstock for making ethylene in a petrochemical plant. Ethane may be recovered as a separate product or left in the methane stream.

The natural gas referred to in this study is the processed, sulphur-free product (mostly methane) derived from a wellhead gas plant.

Natural gas is an excellent clean burning fuel in its own right. On the other hand, it has great potential as a feedstock for the synthesis of petrochemicals such as ammonia, and of the liquid transport fuels that are discussed in this report. It would be wasteful for a developing country to use natural gas for, say, power generation if a lower-grade indigenous fuel such as coal were available.

The technical aspects of the various routes from natural gas to transport fuel are discussed below. The discussion starts with the use of methane itself, or Compressed Natural Gas (CNG) as this system is usually called, and proceeds from there to the manufacture of syngas, the first step in the chemical conversion of methane to liquid fuels as shown in Figure 1.

3.1 Methane (CNG)

The problem with natural gas (i.e., methane) as a transport fuel is of course, that methane is a gas which, unlike propane and butane (LPG), cannot be liquified by pressure alone, at least at ordinary temperatures. It must be stored as a gas and handled in high-pressure steel cylinders. A typical cylinder of compressed methane (CNG) will contain only about one third of the calorific value as would the same cylinder filled with a liquid fuel such as LPG. Low vehicle mileage per fueling for CNG is inevitable.

The problems of the CNG system are primarily logistic rather than technical. A pipeline network is required to distribute the gas to special "filling stations." These stations must be located at not too great intervals along the principal highways, due to low vehicle mileage between "fill-ups". As an alternative to pipelines, it has been suggested that the gas could be distributed to filling stations in special very-high-pressure road tankers, similar to those used to transport oxygen.

Some engine modifications are necessary with CNG -- minor in the case of spark-ignition (gasoline) engines, and still rather ill-defined in the case of diesel engines. The system lends itself best to use in fleets of heavy vehicles such as trucks and buses. CNG is not likely to replace liquid transport fuels entirely, but it could reduce their consumption significantly.

The great advantage of the CNG system is that it can be introduced into a developing country gradually, step by step. An initial huge capital investment for a complex processing plant is not required. An example of the type of processing plant that would be avoided by using CNG, is discussed in the next section dealing with manufacture of syngas from natural gas.

3.2 Syngas Manufacture

Methane, which is the principal constituent of natural gas, is a very stable and chemically inert compound. It is difficult to make it react with anything except of course oxygen, with which it burns to inactive carbon dioxide and water, with evolution of great amounts of heat.

In using methane as a feedstock for synthesis of liquid fuels, the objective is to find a process (chemical reaction) which breaks down the stable CH_4 molecule of methane into active compounds which can then be recombined to make useful liquid products, while at the same time retaining as much as possible of the original calorific content of the methane in these products. Unfortunately, the available processes for conversion of methane are fundamentally inefficient. Loss of original calorific value in the order of 35-40% is unavoidable.

Experience has shown that the best way of breaking down methane is by reacting it with excess steam at high temperature (up to 1650°F) and at fairly high pressure (400-500 psig) in the presence of a nickel-based catalyst. The process in known as Steam Reforming (see below), and the product is a mixture of carbon monoxide (CO) and hydrogen (H_2), with smaller amounts of carbon dioxide (CO_2) and water vapor (H_2O). The mixture is known as synthesis gas, or syngas for short.

In the present study, we are primarily interested in syngas as a source of methanol, since, as discussed in detail below and as shown in Figure 1, methanol can be an intermediate for the synthesis of petroleum- equivalent gasoline and/or distillates (white products), and also can itself be a valuable liquid transport fuel.

Syngas from steam reforming of methane (natural gas) could also be charged to a Fischer-Tropsch process for production of synthetic liquid fuels (see Fig. 1). To date, however, only the somewhat similar syngas derived from coal

gasification (which contains substantially less hydrogen) has been used in this manner. There is no technical reason why syngas from steam reforming of natural gas should not be used. The Fischer-Tropsch process is in commercial operation at the three Sasol oil-from-coal units in South Africa. (See Section 3.4 below).

3.2.1 Steam Reforming

Steam reforming of natural gas, and of other light hydrocarbon gas streams, constitutes the first step in several commercially important conversion processes, in particular the production of ammonia, methanol and industrial hydrogen. Total worldwide installed steam reforming capacity serving these three processes is very large.

The basic reaction during steam reforming is as follows:

$$CH_4 + H_2O \longrightarrow CO + 3H_2$$

In effect, the oxygen in the water "removes" the carbon from the methane, leaving hydrogen. Actually, the syngas produced by steam reforming of methane is an equilibrium mixture of H_2, CO, CO_2 and H_2O (known as water gas), together with small amounts (2 to 3 mol percent) of unchanged CH_4, depending primarily on process temperature. The ratio of H_2 to CO can be varied, over a range, by control of the outlet temperature and of the steam-to-methane ratio in the feed.

The heart of the modern methane-steam reforming process is the fired heater with the catalyst contained in the tubes. Two types of heater design are in use; down-fired and wall-fired. Operating advantages are claimed for both types. The design of very large steam reformer heaters has been brought to a fine art. Well-designed, reliable units are available from several U.S. contractors.

To improve reliability of operation and length of run, modern steam-reformer heaters have the facility to allow for "cutting out" a faulty or cracked catalyst tube without shutting down the plant. The catalyst tubes are cast in high-alloy metal and can be brittle. By avoiding the thermal stresses experienced when shutting down and restarting the unit, a much improved tube life can be realized, while experiencing only a very minor reduction in capacity. The "cutting out" is accomplished while the plant is in operation by "pinching off" ductile, small- diameter "pigtails" at each end of the faulty catalyst tube, thus isolating the tube. The pigtails connect the catalyst tubes to the main inlet and outlet headers.

The nickel catalyst employed in steam reforming is extremely sensitive to sulphur in the feed. The natural gas is usually first scrubbed (by amine or equal) to remove the bulk of the H_2S and mercaptans, if present. This is normally done in a separate gas plant at or near the wellhead. Before entering the steam reformer the relatively sulphur-free gas is passed over a zinc oxide bed to remove final traces of sulphur. All products derived from the resulting syngas are substantially free of sulphur, an advantage from the point of view of transport fuels.

We have discussed the status of steam reforming technology with Foster Wheeler, Stone and Webster and, in more detail, with Davy McKee who designed the steam reformers for the New Zealand project. We have no hesitation in recommending even the very largest steam reformers for use in developing countries.

Straight catalytic Steam Reforming is the process of choice for conversion of natural gas to syngas. There are however two other processes for making syngas that should be mentioned. Both involve the use of oxygen.

3.2.2 Catalytic Partial Oxidation

A modification of the conventional steam reforming process, applicable especially when the syngas is to be used for methanol synthesis, is known as Partial Catalytic Oxidation. A controlled amount of oxygen (obtained from an air separation plant) is injected together with the pre-heated stream of natural gas and steam into an adiabatic secondary reactor, containing nickel reforming catalyst. The temperature rises from internal chemical reaction, eliminating the need for much of the fired heater duty. By controlling the amount of oxygen injected, the resulting syngas can be made to have the correct composition ($CO + 2H_2$ and $CO_2 + 3H_2$) for methanol synthesis, whereas "straight" steam reforming of methane produces a syngas having excess hydrogen for this purpose; see Section 3.3.1 below.

Claim is made that the Partial Catalytic Oxidation process results in a 5-10% saving in capital cost (including cost of the air separation plant) as compared with straight steam reforming. To date, there has been no practical experience to confirm this claim. Fears were expressed to us that the injection of oxygen could cause local overheating problems.

3.2.3 Partial Oxidation

Another method of making syngas from natural gas would be by the non-catalytic Partial Oxidation process developed by Texaco and Shell, primarily for gasification of heavy oils and tars. It is in use worldwide for that purpose. In this process, the preheated feedstock plus excess steam is reacted with a controlled amount of oxygen, from an air separation plant, without catalyst being present, in a special internally-insulated vessel where very high temperatures are generated (2200°F or more).

The absence of a catalyst is a great advantage when gasifying heavy residual oils (even powdered coal) for which the Partial Oxidation process was developed. These feeds contain impurities such as sulphur and heavy metals which would quickly poison a reforming catalyst. The process is not used for natural gas conversion so far as is known, and is mentioned here only for completeness.

3.2.4 Utilization of Syngas

As shown in Figure 1, there are two currently available routes from syngas to liquid transport fuels. These are:

a. via methanol which can be made directly from syngas by well-established, commercially operating processes, and

b. via the Fischer-Tropsch process whereby the syngas is converted directly to a wide-boiling-range mixture of liquid products from which marketable transport fuels can be recovered by further processing.

Methanol-based routes are considered in Section 3.3 following and the Fischer-Tropsch route in Section 3.4.

3.3 Methanol-Based Routes

This Section is concerned with methanol, its production from syngas, its direct application as a transport fuel and its use as an intermediate in the synthesis of petroleum-equivalent transport fuels.

3.3.1 Methanol Production

The syngas from steam reforming is charged directly to a methanol synthesis plant. Unlike in ammonia and hydrogen manufacture, no "shift" stage is required to convert CO to CO_2 which is then "scrubbed" out.

The basic methanol synthesis chemistry is as follows:

$$CO + 2H_2 \longrightarrow (CH_3)OH$$

As noted above in the discussion of steam reforming of methane, the syngas from such reforming produces an excess hydrogen over that required for methanol. The simplified steam reforming and methanol synthesis chemistry is:

$$CH_4 + H_2O \longrightarrow CO + 3H_2 \longrightarrow (CH_3)OH + H_2$$

In the syngas processes using oxygen injection (see previous Sections), there will be no surplus hydrogen available over and above the amount required to make methanol from the available carbon oxides in the syngas.

The excess hydrogen from steam reforming of methane can be used for several purposes as follows, or it can be burned as fuel.

a. In the Mobil MTG process a small amount of hydrogen is required for cracking and removal of high-melting durene from the gasoline product.

b. In the Mobil MOGD process hydrogen is required to saturate (hydrogenate) the middle distillate (diesel/kerosene) product, in order to increase cetane number (diesel fuel) or improve stability (kerosene).

c. Excess H_2 can be used to react, in the methanol synthesis unit, with any carbon dioxide available from outside sources, thereby increasing the overall yield of methanol, as follows:

$$CO_2 + 3H_2 \longrightarrow (CH_3)OH + H_2O$$

Outside CO_2 (see Item c above) might be available from the natural gas itself (many gas sources contain some CO_2) and also from the "shift" stage of a hydrogen plant in a refinery, or from the "shift" stage of an ammonia plant in a fertilizer complex. Availability of such sources of outside CO_2 could possibly determine the most economic location for the methanol plant, if the latter is considered as an extension of an existing oil refinery or fertilizer complex.

Since the syngas from coal gasification is always deficient in hydrogen from the point of view of methanol synthesis, while the syngas from natural-gas steam reforming has surplus hydrogen for this purpose, it has been suggested that a combination of natural-gas steam reforming and coal gasification would, together, produce a balanced syngas for methanol production. Thus the combination could be a cost-attractive method of making methanol.

The largest methanol plants built to date are in the range of 2000 to 2750 short tons per day of methanol production. Davy McKee has built over 40% of the world's methanol capacity, including the two largest units each of 2750 st/d for the USSR. This firm believes there would be no cost advantage of scale in going to larger plants. For example, the New Zealand gas-to-gasoline project uses two parallel methanol trains, each rated at 2450 st/d, rather than a single large unit.

Until 1969, methanol plants were designed to operate at high pressures (+/- 5000 psig) and were liable to an exothermic, run-away methanation reaction which gave the plants a bad reputation as regards safety. In 1969, Imperial Chemical Industries (ICI) introduced a new, more active catalyst which works at approximately 1500 psi. At this pressure, runaway methanation is said to be impossible (Davy McKee). All methanol plants built since 1969 have been designed to the new, low-pressure ICI process specifications. At the present time the ICI process, and licensed variations, is predominant. The New Zealand gas-to-gasoline plant uses ICI technology.

Production of methanol from syngas is an endothermic, equilibrium reaction as follows:

$$CO + 2H_2 \longrightarrow (CH_3)OH$$

$$CO_2 + 3H_2 \longrightarrow (CH_3)OH + H_2O$$

As in steam reforming, the key to methanol synthesis lies in the heater design. Catalyst is located in the fired tubes and the reaction proceeds rapidly at first, and then more slowly towards the outlet of the heater. The reaction is quite endothermic, and a high heat flux can be maintained (the heat being absorbed chemically) in the early and mid section of the tube coil where the reactant temperatures are still relatively low. Thus, in spite of the high heat flux, tube surfaces can be maintained at reasonable temperatures. A number of tubes make up a coil. The coil exit temperature, however, must be high (1500°F) in order to push the equilibrium toward methanol, and thereby increase conversion. Heat flux near the coil outlet can be quite low, however, thus permitting control of tube surface temperature in this critical region. Unreacted syngas is separated and recycled, with excess hydrogen being withdrawn.

The above considerations suggest a concurrent flow design of the heater, with maximum heat transfer to the cooler parts of the coil and reduced heat flux at the hot exit. When compared with the conventional, wall-fired heater using more or less counter-current flow, tube life is said to be much improved. The methanol synthesis-loop heaters in the New Zealand gas-to-gasoline project are of downflow, concurrent design developed by Davy McKee. Similar units are already in use in other large operating methanol plants. A claimed advantage of the downflow design is that adjusting burners to "balance" the heater is much simpler than for a wall-fired furnace. A further advantage is that the convection section is located near grade.

All main power drives are steam turbines since continuity of operation is considered to be of vital importance. Shutdowns because of electric power failures are to be avoided.

Modular, computerized control has removed much of the burden of instrument maintenance, an important factor in developing countries. Operation is relatively simple and straight forward. For a plant in a developing country, it is suggested that operations responsibility should revert to all-national personnel control well before maintenance responsibility, basically because it takes a longer period to accumulate experience in the maintenance area.

In view of the current world-wide interest in methanol, continual improvements in the process design of methanol plants are to be expected. A case in point is the Wentworth methanol process which uses two or three different varieties of catalyst, each specifically suited for a particular stage of the process. Substantial cost savings are claimed.

Discussions with some of the leading A/E contracting companies confirm that there should be no hesitation in considering large, modern, low-pressure methanol units and their associated steam reforming units as being suitable for installation and operation in developing countries.

Methanol can be used either directly itself as a transport fuel or it can be used as an intermediate product for making petroleum-equivalent transport fuels.

3.3.2 Methanol Direct-Use Options

There are a number of ways that methanol can be used directly as shown in Figure 1. In the form it is produced it can be blended to extend gasoline supplies, or it can be used by itself as a substitute for gasoline, or alternatively, for diesel fuel. These options are explored below in more detail.

Blending with Gasoline. Methanol is partially miscible with ordinary gasoline, and blends with up to 5% methanol can be used in gasoline spark-ignition engines with no modification of the engine. Methanol has a high intrinsic octane number. The major drawback is that the gasoline/methanol blend must be kept free of water, otherwise the methanol tends to go into the aqueous phase. All storage breathing systems must be fitted with moisture absorption equipment. The methanol blend can be marketed through the existing gasoline marketing infrastructure, a definite advantage in a developing country. The 5% methanol blend has been satisfactorily tested in several countries (with only minimum corrosion problems being encountered).

The attractiveness of methanol blends is limited because of the small effect on the import of petroleum products for developing countries which do not use much gasoline.

Methanol As a Substitute for Gasoline. Methanol by itself, or in blends containing 90% or more of methanol, constitutes an excellent substitute for conventional gasoline. We received informed opinions that such high-methanol fuels were a much better way of using methanol than in dilute blends with gasoline. See Table I for comparative properties of methanol and gasoline.

There are, of course, a number of problems. Methanol is quite destructive to certain plastics and hose materials in common use in gasoline-fueled vehicles, and it is also corrosive to some metallic engine parts. A separate marketing and distribution network is necessary, vehicles and engines must be modified, and fuel tanks supplemented due to the lower calorific value of methanol (about half that of ordinary gasoline, i.e., 8,600 vs 18,900 Btu/lb.

Considering the above, it would be expected that vehicle mileage between refuellings would be cut in half when using methanol. In practice, however, it has been reported that higher compression ratios and generally improved combustion efficiency when using methanol, resulted in vehicle mileage reductions of only about one third. The absence of lead additives (TEL) in the fuel, and the absence of hydrocarbons in the exhaust are added advantages of substituting methanol for gasoline.

TABLE I

PHYSICAL PROPERTIES OF METHANOL, GASOLINE AND DIESEL FUEL[1]

	Methanol	Typical Gasoline	Typical Diesel Fuel
Specific Gravity	0.79	0.72 - 0.78	0.83 - 0.88
Stochiometric Air/Fuel Ratio	6.5 to 1	14.5 to 1	14.5 to 1
Heat of Combustion[2] (BTU/lb)	8,570	18,900	18,500
Latent Heat of Evaporation (BTU/lb)	506	150	110
Boiling Temperature, °C	65	27 - 225	240 - 360
Flash Point, °C	11	-45	38
Auto-ignition Temperature, °C	470	425 - 510	260
Octane Number			
Research (RON)	106 - 115	79 - 98	--
Motor (MON)	82 - 92	71 - 90	--
Cetane Number	v. low	5 - 10	45 - 55

[1] Data from Reference No. 4, Appendix B.

[2] Lower heating value

The necessity for engine modifications, even if minor, together with the necessary adjustments to carburetors etc., is a disadvantage of using methanol as a substitute for gasoline. Enthusiasm for methanol as a gasoline substitute has been expressed by big methanol producers, vehicle testing facilities, and, less openly, by large fleet vehicle owners. Unfortunately for many developing countries, substituting methanol for gasoline does not help their major problem which is finding a substitute for and reducing imports of diesel oil (distillate), the most needed transport fuel in such countries.

Methanol as a Substitute for Diesel Fuel. Methanol is not miscible with diesel fuel, and thus cannot be used as a blending material. Emulsions of methanol and diesel fuel have been tried, but, we understand, with little success. The emulsions tend to be unstable and the emulsifiers required are very expensive.

A great deal of work has been done, and still continues, in using methanol, with or without additives, as a direct substitute for diesel fuel. The possibility of using methanol is especially attractive for developing countries where diesel fuel is the chief imported petroleum product. Furthermore, the most advanced, and most publicized, process for converting methanol to petroleum-equivalent diesel fuel, i.e. the route based on the Mobil MOGD process, is not yet fully developed. (See Section 3.3.4, below). Comparative properties of methanol and diesel fuel are given in Table I.

Studies and experimental work are currently underway in California, Detroit and West Germany (Daimler Benz). Several approaches are being taken. To enable a diesel engine to run on more or less pure methanol, substantial modification or redesign is necessary. It is known that some engine manufacturers are considering extensive engine design modifications such as new cylinder heads, incorporation of glow plugs, and even a dual-injection system where the engine would idle on diesel fuel alone but under load would run on diesel fuel and methanol injected separately. Up to 90% substitution of diesel fuel by methanol is possible at full load. Methanol has an exceedingly low cetane number, and another approach is to add cetane improvers (alkyl nitrates or similar compounds) to minimize the degree of required engine modification, or possibly even to allow the use of a conversion kit, although this seems unlikely at the present time. For a more detailed review of the options, see Appendix C.

We recommend that as part of any comprehensive investigation into a site specific conversion of natural gas into liquid transport fuels, the current state of the art as regards the use of methanol as a direct substitute for diesel fuel be fully evaluated. The savings realized from not processing the natural gas beyond methanol (savings which could represent half the capital cost and a substantial portion of the operating costs) could be applied to the development of the separate fuel distribution system and the fleet modifications required to operate directly on methanol. In special cases, such as a large fleet of similar buses or trucks under a single owner's control, there will be a real incentive to use methanol directly as fuel.

3.3.3 Methanol Conversion to Gasoline

The direct conversion of methanol to high-quality gasoline has really only become practical following the recent development of synthetic crystalline zeolite catalysts. The acknowledged leader in this new development has been Mobil, although Exxon, W. R. Grace and Gulf are known to be active in the field.

Because of Mobil's overwhelming experience compared with the others, we restricted the present study, when addressing the direct conversion of methanol to gasoline, to the Mobil MTG (methanol to gasoline) process. This process has been simulated on a commercial scale in a modified wax hydrofiner in a Mobil refinery and is currently being installed in the New Zealand "gas-to-gasoline" (14,500 barrels/day) project, scheduled for start-up in 1985. We discussed the MTG process in detail with Mobil and also with Foster Wheeler, who assisted Mobil in the basic process design of the New Zealand plant.

We also discussed the MTG process with Foster Wheeler's peers in the industry. The opinions we received concerning the readiness of MTG were generally positive, although it was clear at the same time that a "wait-and-see" attitude prevailed in view of the nearness of the New Zealand plant start-up.

It is clear to us that the development of synthetic zeolite catalysts, particularly the ZSM-5 catalyst pioneered by Mobil, has opened up a new and exciting chapter in the history of commercial catalytic processes, especially with respect to their impact on natural gas as a primary energy resource in a national economy. In what follows, reference is only to the Mobil ZSM-5 catalyst, since this is the key to the MTG process. Mobil is said to have 80 catalyst patents in the field.

The ZSM-5 and related catalysts are characterized by a very uniform pore size (about 5.4 angstroms). This uniformity results in an extraordinary degree of selectivity as to the precise chemical reactions they will promote, the most significant characteristic of these catalysts. Because reacting molecules have to be able to "fit" into the pores of the catalyst, only certain specific sizes and shapes of molecules are able to react. Other normally competing reactions are not catalyzed, and thus do not take place. In contrast. Fischer-Tropsch catalysts do not have this selective property, at least not to the same degree.

An excellent illustration of the way the ZSM-5 catalyst works is provided by the Mobil distillate dewaxing process (Mobil already offers five different processes based on the ZSM-5 catalyst). Wax consists of long straight-chain paraffin molecules. These molecules, because of their elongated shape, are able to enter the pores of the ZSM-5 catalyst, and once there are cracked selectively. Thus only the wax is destroyed and the pour point of the remaining distillate is reduced, the desired objective of dewaxing.

Overall, the Mobil MTG process essentially dehydrates the methanol feedstock, as follows:

$$n(CH_3)OH \longrightarrow nCH_2 + nH_2O$$

where the nCH_2 corresponds with the (hydrocarbon) gasoline product. In practice, the reaction takes place in several steps: first, the conversion of methanol to dimethylether (DME) with elimination of water; then, the conversion of DME to light olefins, with further elimination of water; and finally the condensation of the light olefins within the ZSM-5 catalyst to form gasoline, as follows:

$$2(CH_3)OH \longrightarrow (CH_3)_2O + H_2O$$

$$n(CH_3)_2O \longrightarrow 2nCH_2 + nH_2O$$

The ZSM-5 catalyst is active in all the reactions. In effect the gasoline is synthesized in the pores of the catalyst. The process operates at a pressure of 400-500 psig and at nominally high temperatures.

Because of the selectivity of the ZSM-5 catalyst in effecting synthesis, only certain specific condensation reactions occur, leading to a uniform product. The gasoline produced consists largely of mildly branched chains, i.e. iso-paraffins and iso-olefins, with some aromatics. These are all excellent gasoline components. The research octane number is 93 (clear).

The MTG gasoline product contains a certain amount of durene, an unusual substituted aromatic hydrocarbon with a very high melting point. It is undesirable in gasoline, and is removed in a special processing step where the durene is selectively cracked in the presence of hydrogen over a catalyst.

The methanol dehydration reaction in the MTG process is highly exothermic (750 Btu/lb of methanol converted) and this is reflected in the process design. Heat is removed, and temperature rise is controlled, by recycle of light product gases, with a molal recycle ratio of approximately 9:1.

The large gas recycle naturally involves significant power requirements, (35,000 BHP recycle compressor in the case of the 14,500 BPSD New Zealand plant), and correspondingly large heat exchangers, coolers, valves, pipes, etc., to handle the volumes of gas. For the same reason, i.e. the high recycle rate, the five reactors in the New Zealand plant are each 15 feet in diameter, considered maximum for the pressure-temperature conditions existing, and yet manageable in transport and erection.

Information on the catalyst inventory of the New Zealand plant is not available, but may be assumed to be large both in volume and in cost.

It is apparent that the physical size of the equipment in the MTG process is substantially greater than would be expected in terms of the relatively small nominal capacity of the plant. Equipment size could perhaps be important when considering a plant to be built in a developing country, where roads and other means of transport may be limiting. Modularizing can help, of course, but an individual familiar with the New Zealand plant said "An outsider could easily mistake this 14,500 BPSD MTG unit for a 200,000 BPSD Crude Topping Unit.[1]" This may be an exaggeration, but it cannot be denied that the equipment is very big. However, the associated methane-steam reforming equipment, especially the heater, are also large.

The production capabilities of the MTG process have been tested by Mobil on the pilot-scale over a period of time. Nevertheless, one of the important questions, if the process is to be used in developing countries, is the life and ruggedness of the catalyst, both in operation and in regeneration. Sulphur is not a problem, since the methanol feed is essentially sulphur free. Coke is deposited on the catalyst during operation and must be burned off with an air/steam mixture. The New Zealand plant has five reactors, one of which is always a "swing" reactor in which catalyst is being regenerated. Mobil advised that regeneration of the catalyst in a reactor is expected to be required about once per month. Furthermore, Mobil cautioned that it is very important to avoid high local temperatures during regeneration. Steam at high temperature is especially harmful to the ZSM-5 catalyst. Mobil acknowledges that great care must be taken during regeneration to avoid deactivating the catalyst.[2] This is especially important in view of its high cost. Although Mobil will not quote a cost figure for the ZSM-5 catalyst, they will admit to its value being significant. For the New Zealand plant Mobil will lease the catalyst rather then selling it outright. The terms of the lease are confidential. The spent catalyst must be returned to Mobil for disposition.

An important point to consider in respect to an MTG plant in a developing country would be that there is only one source of catalyst supply, namely Mobil. There is no doubt that making the catalyst requires an advanced degree of know-how. A reliable source commented on the fact that the catalyst manufactured by Mobil was extremely rugged and could be regenerated a number of times, whereas similar catalysts, made by others exactly according to information disclosed in Mobil patents, had been disappointing and had quickly lost activity.

It would seem that Mobil has a "secret ingredient" in their catalyst manufacture.

---

1 Such a crude unit, depending on the character of the crude oil charged, could produce 50,000 to 100,000 B/D of gasoline.

2 This seems to be a question of temperature control during the regeneration to avoid "hot spots" that could serve to close the fine pores because of near melting conditions on the catalyst surface.

Like all processes for conversion of natural gas (methane) to liquid transport fuels, the MTG process plus the associated steam reforming and methanol synthesis, is thermally inefficient. Overall thermal efficiencies in the order of only 60-65% are quoted for going from methane to gasoline, including process fuel consumed.

In regard to maximum MTG plant sizes, it seems to be Mobil's opinion that the fixed-bed design, with its large heat exchangers, coolers and recycle compressor, is only suitable for MTG units up to about 25,000 BPSD of product (New Zealand plant is rated at 14,500 BPSD). Mobil visualizes future plants in the 40,000 and even 60,000 BPSD range. For such capacities they would apply a Fluid-bed technology to facilitate the extremely large heat removal. We understand that a 100-BPSD Fluid-bed MTG pilot unit is currently being operated in West Germany by Mobil, U.S. Department of Energy and others. Due to the low-pressure operation which is an integral part of Fluid-bed technology, the gasoline product is more unsaturated and the yield of C_3 and C_4 olefins is much increased. By processing these light olefins in a conventional alkylation unit, the net yield of gasoline from a Fluid-bed MTG unit is increased by about 2% and the unleaded octane number is increased by 2 or 3 units.

The New Zealand plant, with five fixed-bed reactors, uses a separate small "trim" fired heater in association with each reactor for temperature control. Mobil believes that these heaters (except for a single one required for catalyst regeneration and start up) could be eliminated in future designs.

The general consensus among the A/E firms we interviewed is that the MTG process is sound in principle and has been amply tested by Mobil on the pilot-plant scale, and that the process is suited for use in developing countries. Some reservations were expressed, however, in regard to the use of gas-phase recycle to remove heat in the MTG process, which results in extremely large equipment sizes and a high compression load. There was general preference for the new MOGD technology (see next section) which employs liquid-phase recycle. One engineer we interviewed went so far as to say that, in his opinion, no more MTG plants would be built after the New Zealand project.

3.3.4 Methanol Conversion to Distillates

The route from methanol to distillates (jet fuel and diesel fuel) is not as advanced as that to gasoline, nor is it fully mapped at the present time. This is a significant fact since most developing countries should much prefer to convert indigenous natural gas to diesel fuel than to gasoline.

The most promising route to diesel fuel from methanol appears to be a three-step process as follows:

Step 1. Conversion of methanol into C_3 thru C_6 light olefins by a new Mobil process.

Step 2. Conversion of the light olefins from Step 1. plus any other light olefins that might be available from other sources (see below), into distillate (diesel fuel) by the Mobil MOGD process.

Step 3. Saturation (hydrogeneration) of the synthetic diesel fuel from Step 2 to increase cetane number.

The critical link in the chain is Step 1. As discussed below in more detail, the new Mobil process for converting methanol to light olefins is still in the laboratory or small pilot-plant stage. Tests are planned for early next year on the 100 BPSD Fluid-bed pilot plant in West Germany which as noted above is presently engaged in another test program. The new process uses the ZSM-5 catalyst.

The MOGD process in Step 2 (the letters stand for Mobil Olefin to Gasoline and Distillate) is much further developed and has already (1981) been tested on a commercial scale in one of Mobil's refineries. The test unit was a hydrofinisher modified to provide three MOGD reactors, each with thirteen foot depth of catalyst. The charge stock was a $C_3/C_3=$ and $C_4/C_4=$ mixture* from a Fluid catalytic cracking unit. The large-scale test lasted for 70 days and the results duplicated those from the earlier pilot-plant runs. We found no evidence of any commercial MOGD units being projected or built to date. The MOGD process uses ZSM-5 catalyst.

The olefin-saturation process of Step 3 can use any standard commercially-available hydrotreating technology.

It is apparent that Steps 2 and 3 are ready for commercial use, whereas Step 1 is only just leaving the laboratory. The three steps will be discussed in further detail, starting with the MOGD process, Step 2.

Step 2. MOGD Process. In its present form the MOGD Process, Step 2, is a fixed-bed process operating in the vapor phase and using three or more adiabatic reactors in series. The process is exothermic and there are coolers at the exit of each reactor, with a fired heater ahead of the first. Each reactor can be taken out of service as a "swing" reactor for catalyst regeneration. Recycle is liquid phase material in the gasoline range, when making a diesel fuel product. The use of a liquid recycle provides a significant advantage over the MTG process, where recycle is in the gas phase and a very large recycle compressor is required.

The preferred feedstock to the MOGD process is C_3 through C_6 olefins. The presence in the feed of light paraffins is immaterial. They take no part in the process. Mobil says that ethylene ($C_2=$) is not a good feedstock, but apparently does no harm.

In a natural gas conversion project, such as is being discussed here, most of the MOGD feed would presumably come from a Mobil methanol-to-olefins plant (see below). However, if the project were integrated with an existing oil refinery, alternate sources of light olefins might become available which could be charged to the MOGD unit in order to increase overall yield of diesel fuel. In a developing country there would probably be little incentive to allocate such olefins to making additional gasoline as would be the usual practice when gasoline is the primary product.

* Mixture of C_3 and C_4 paraffins and C_3 and C_4 olefins.

Sources of light olefins in a typical oil refinery include Coking, Residue Catalytic Cracking, Fluid-bed Catalytic Cracking and Thermal Cracking. Should a developing country's demand for LPG be limited, as is often the case, then such sources as crude oil and the natural gas itself could supply quantities of light paraffins that would ordinarily go to LPG. These light paraffins can readily be dehydrogenated to light olefins using well-established refinery processes.* Feedstock could also come from an MTG unit, if installed. The Fluid-bed version of the MTG process is a particularly attractive source of C_3 through C_6 olefins. Another source of light olefins is the low-pressure Synthol version of Fischer-Tropsch.

The importance of these potential auxiliary feedstocks should not be underestimated in a developing country. If the MOGD process is installed to make diesel fuel in the first place, it must be assumed that diesel fuel is in growing demand, probably to the point where gasoline and LPG components can be sacrificed to increase its yield. This is yet another argument for locating any natural gas conversion plant, in particular one involving the MOGD process, as part of an existing oil refinery. If the natural gas field is not easily accessible to the local oil refinery, then the possibility of manufacturing the methanol near the gas field and transporting it by pipeline to the refinery for further processing, should be investigated.

The MOGD process is flexible and can make any combination of distillate and gasoline between the limits of 90% distillate with 10% gasoline, to 100% gasoline. Inspection data on typical products are shown in Table II.

The chemistry of the MOGD process illustrates the selectivity of the ZSM-5 catalyst. (See Appendix B for citations from the literature offering further details). Briefly, the feed olefins join together end-to-end in the pores of the catalyst. (The correct term for this joining together is "oligmerizing"). Products also crack back to lower olefins. The net result is a continuous carbon number product with the average carbon number being a function of temperature, pressure and contact time. Diesel fuel product is formed at low temperature and high pressure; gasoline product requires the reverse.

Because of the shape selectivity of the ZSM-5 catalyst, the product has a very well-defined molecular structure; in general a long straight- chain with an occasional methyl group sitting on it. The longest straight chain without a methyl group is about 4 carbon atoms. As Mobil points out, the product is unique, a special type of iso-olefin. Because there is both a forward and reverse reaction at the same time, the product structure is relatively independent of charge composition, and is determined primarily by reaction conditions, i.e., residence time, temperature and pressure.

---

* However, if LPG is already in use as a transport fuel, then this use would compete with its use as a feedstock to make diesel fuel.

TABLE II

MOGD PRODUCT QUALITIES[1]

		MOGD Product	Industry Standard
GASOLINE			
Specific Gravity		0.73	-
Octane, R + O		92	-
Octane, M + O		79	-
JET FUEL			
Specific Gravity		0.78	0.84-0.78
Freeze Pt. °C	Less than	- 60	-40 max.
Aromatics, Vol.%		4	25 max.
Smoke Pt. mm		28	18 min.
JFTOT, °C		343	245 min.
Sulphur % wt.	Less than	0.002	0.30 max.
DIESEL FUEL			
Specific Gravity		0.78	0.88-0.84
Bromine N°		4.0	-
Aromatics, Vol.%		3.0	-
Pour Pt., °C	Less than	-50	-7
Viscosity, CS @ 40°C		2.5	1.9-4.1
Cetane N° (Engine)		56	45 min.
Sulphur % wt.	Less than	0.002	0.50 max.
90% B.P. °C		343	340

---

[1] Data from Reference No. 1a, Appendix B.

We have gone into the chemistry in some detail to emphasize the fact that the ZSM-5 catalyst is a precise tool. After hydrotreating in Step 3 in order to saturate the remaining olefinic bonds, the uniquely- structured product has an excellent cetane number, a low freezing point and substantially zero sulphur content. Thus it constitutes a very useful blending material to bring lower quality refinery stocks up to specification. This confirms the opinion expressed by A/E firms, with which we fully agree, that natural gas conversion plants should, wherever practicable, be located adjacent to or be integrated with an existing oil refinery, particularly in a developing country. It is recommended that if an MOGD unit is to be built, it should be sized to handle all potentially available light olefin feedstocks in addition to the main feedstock produced from the methanol-to-olefins unit.

Step 3. Saturation. This step, in which hydrogen is used to saturate the olefinic bonds in the raw MOGD diesel fuel product, can be done in any standard hydrotreating unit. Hydrogen will usually be available from the methanol plant. Cetane number of the diesel product is increased by saturation from 33 to 56, while bromine number is reduced from 79 to 4. Hydrogen consumption is 470 SCF per barrel. In an existing refinery the raw MOGD product could be blended with untreated refinery diesel fuel for combined single-step saturation and hydrodesulphurization.

Step 1. Methanol to Olefins. The only process we have considered in this report for Step 1, the conversion of methanol to light olefins (C_3 through C_6) in order to provide charge for the MOGD process, is the one currently being developed by Mobil based on ZSM-5 catalyst. This new process has so far been successfully tested only in the laboratory and on a small-scale pilot plant. We understand from Mobil that large-scale tests are planned at the 100 BPSD Fluid-bed pilot unit in West Germany, beginning next year. Mobil were optimistic and confident about the process.

An alternate route to light olefins from methanol, based on somewhat better-tested technology, would be via a low-pressure Fluid-bed MTG process to make olefins plus de-hydrogenation of light paraffins. This route is still conceptual and untested, and has not been considered in the present report.

In discussing their methanol-to-olefins process, Mobil provided a diagram depicting the progress of the reactions with time for the better-established MTG process in terms of reactant compositions. About half-way along in the reaction process, quite large quantities of light olefins appear but then disappear again as the reaction proceeds. The problem in making olefins as a product is to stop the reaction at the right point. Mobil is confident that they know how to do this, based on successful laboratory and small-scale tests made by them (no data made available). Olefin formation is generally favored by low pressure and high temperature, and Mobil believe that Fluid-bed technology is therefore the way to go. The West German tests should confirm this, and Mobil is presently predicting that the process will be offered on a commercial basis in about 18 months (beginning of 1986).

Our discussions of the Mobil methanol-to-olefins process with different A/E firms revealed a cautious optimism, no doubt reflecting awareness of Mobil's spectacular past successes in developing the ZSM-5 catalyst and processes based on it. We ourselves feel reasonably confident, based on our discussions, that the methanol-to-olefins process will be available for commercial use within the time frame suggested by Mobil and that this prospect should be incorporated in any further study made as a result of our work.

We would urge caution, however, in designing a complete project for a developing country to make diesel fuel from surplus natural gas by this route. A "wait-and-see" attitude is preferable at the present time. Facts such as catalyst life in a Fluid-bed environment, catalyst losses (important when the catalyst is so expensive and harder to control in a Fluid-bed process), and perhaps other unforeseen problems, must be defined and resolved before the process can be considered ready for installation in a developing country.

3.4 The Fischer-Tropsch Route

The Fischer-Tropsch process was originally developed in Germany during World War II as a means of obtaining liquid fuels from coal. It has subsequently been further developed by Sasol in South Africa, and is the heart of the vast Sasol 1, Sasol 2, and Sasol 3 Complex in that country.

The process uses a rugged iron-based catalyst and converts syngas (H_2 + CO), obtained at Sasol from coal gasification, to a complex mixture of hydrocarbons and oxygenated compounds. Elaborate separation and refining processes are then necessary to make specification fuels and petrochemicals from this primary synthetic product.

The original high-pressure Fischer-Tropsch process, known as the Arge Process, was built as part of Sasol 1 during the 1950's. An improved, low-pressure version of Fischer-Tropsch using an ebulating (semi-fluidized) catalyst bed, has been developed by Sasol and is known as the Synthol Process. It is used in Sasol 2 and Sasol 3, built during the last few years with Fluor Corpation as the managing A/E contractor. A Sasol 4 plant is under discussion but no details were available.

Operation of the Sasol complex is said to be satisfactory, and the plant now supplies a very substantial portion of South Africa's needs for transport fuels and petrochemicals. Imports of crude oil have been decreased accordingly. The whole complex consumes about 33 million tons per year of locally-mined coal and uses Lurgi coal gasifiers.

The Fischer-Tropsch processing route from natural gas to transport fuels (see Figure 1) has one major advantage over the methanol route described earlier in this report. This advantage is that the Fischer-Tropsch route is actually in successful operation at the Sasol complex in South Africa. In other words, it is a proven commercial process, obviously an extremely important consideration for any project to be built in a developing country.

An important negative consideration, however, is that the Sasol complex includes what amounts to a complete, and very complex, oil refinery to make specification fuels and petrochemicals from the Fischer-Tropsch raw product. The latter is really a kind of synthetic crude oil. An analogy may be in order. The Fischer-Tropsch catalyst is a rugged, bludgeon of a tool that catalyzes a dozen reactions at once, introducing a vast number of by-products. In contrast, the ZSM-5 catalyst is a precise, elegant rapier that catalyses only certain desired reactions and suppresses all others, minimizing by-products.

The Fischer-Tropsch process has been improved over the years, as witness the Synthol modification developed by Sasol. There are also believed to be several large oil companies in the U.S. today actively working to improve Fischer-Tropsch catalysts, primarily for synthetic fuels based on coal. Conflicting opinions exist amongst U.S. A/E firms regarding the future of the Fischer-Tropsch process. One with extensive Fischer-Tropsch experience is optimistic, while certain other firms stated bluntly that in their opinion, no more Fischer-Tropsch plants will probably ever be built.

Our opinion, admittedly based on a superficial review of the data, is that Fischer-Tropsch, in spite of recent improvements, is basically an old-fashioned process more suited for coal than gas, whereas the route from natural gas via methanol and synthetic zeolite catalysts, is the way of the future.

Furthermore, we feel that the complex refinery technology required in the Fischer-Tropsch route is probably not suitable for transfer to a developing country.

It seems to us incorrect, in this day and age, to start with a clean, simple feedstock like natural gas (methane), convert it into a dirty, wide-boiling-range mixture resembling crude oil, and then laboriously sort out the pieces by complex refining. Moreover, even if numerous products can be made including the ones of interest, in a developing country many of these are likely to be unmarketable at attractive prices.

Starting with coal as its feedstock, however, it could well be another matter, since the syngas from low-grade coal gasification, being deficient in hydrogen and high in sulphur and other catalyst poisons, may be more suitable for Fischer-Tropsch than for methanol manufacture. Thus, a large new synthetic fuels complex based on coal could well employ a modern version of the Fischer-Tropsch process.

4.0 THE POSITION OF A/E FIRMS

There are a number of U.S. A/E (architect/engineer) firms in a position to undertake the design, engineering and construction of facilities in developing countries to convert natural gas components to white products.

All the firms we interviewed, as listed in Appendix B, expressed interest in participating in either a feasibility study or a turnkey project. There is no question that other A/E firms would have similar interests.

The A/E firms are prepared to enter into contracts with guarantees for process performance (as supported by the process licensor), for equipment conformance to specifications (as supported by the equipment suppliers), and for design and construction detail work in accordance with "good engineering practice" or any codes the client might wish to apply (supported by an agreement to re-do faulty design work at no extra charge).

Today, A/E firms are in dire need of work, and are therefore willing to enter into agreements that are relatively favorable to the purchaser.

The A/E firms we interviewed were enthusiastic regarding the possibility of future projects based on the ZSM-5 catalyst, firstly because of the successful demonstration tests, and secondly because of the technical and financial backing that Mobil has demonstrated in New Zealand.

A developing country considering a large capacity methanol unit would do well to give competitive credits to the A/E firms with proven experience when evaluating bids, and particularly to recognize the difference between a petrochemical-type methanol plant and a larger transport-fuel methanol plant.

The steam reforming units, the methanol units and the MTG and MOGD catalytic units are generally similar in equipment makeup, instrumentation and control, materials of construction, plant layout, and other such features to standard oil refinery processing units. All reputable A/E firms have built numbers of this type of unit and have a vast experience base to use in new work.

5.0 TECHNOLOGY TRANSFER CONSIDERATIONS

The consensus of the A/E firms we interviewed, which we support, is confidence in the ability of developing countries to assume the responsibility to erect and operate any of the units involved in the conversion of natural gas to white products, as described in this report. Elaborate training courses will be required as well as a degree of expatriate assistance, particularly in regard to maintenance. This scenario is not uncommon, and its success depends largely on the seriousness of the developing country's personnel. The high level of capability of A/E firms can be illustrated by the fact that the New Zealand gas-to-gasoline grass-roots plant is on schedule and is presently said to be under-running the budget by 20%.

We have suggested, elsewhere in this report, that any natural gas processing plants be located near to, or integral with, a petroleum crude-oil refinery. There are a number of advantages from the manpower and maintenance facilities viewpoint, and also it provides for easy blending of the products of the two industries, a positive advantage for both. This has not been the case in New Zealand where the only available oil refinery is located remote from the gas plant and the gas fields. The New Zealand situation essentially prohibited integration of the gas conversion plant and the refinery.

The A/E firms we interviewed expressed confidence in the Mobil ZSM-5 catalyst, and we understand that, prior to June 1984, over 200 requests for samples have been processed by Mobil. The quality of the catalyst appears to be unquestioned, there should therefore be no risk involved in achieving expected product yields, providing a Mobil manufactured catalyst is employed. Mobil's present policy is only to lease the catalyst to the user. Thus Mobil remains a substantial partner, in effect, in any project.

The gas-to-white-products processes described in this report all employ state-of-the-art equipment. Therefore any responsible A/E firm should be able to estimate the cost of a new unit or plant within a predictable range of accuracy. Yields and performance guarantees would be subject to direct discussion with Mobil.

We believe that the equipment involved in natural-gas-to-white-products projects represents close to maximum sizes manufactured in a number of areas (pressure vessels, compressors, valves). Initial predicted completion date will largely depend on uncertainties arising from site locations and transportation conditions. This situation is not uncommon, and difficulties may be avoided by initiating, early in the equipment manufacturing period, a system of close control over progress, inspection of quality of manufacturing, and through knowledge of logistic problems.

We also believe that, in projects of this magnitude and complexity, in addition to an A/E firm, the owner or financing institution should contract with an independent firm experienced in project monitoring. A monitoring team of engineers reviews the progress and quality of the work during all phases; design, engineering, equipment purchase and manufacture, construction, precommissioning and start-up. They are experienced personnel that can become aware of possible trouble areas before delays or costs are incurred, and take steps to prevent them.

The New Zealand project plant equipment was preassembled in modules which were shipped to the site for assembly. This method of constructing a process plant increases shop labor time and reduces field assembly time. The advantages and disadvantages of modular construction will vary with each developing country and should be evaluated by considering site-specific conditions.

APPENDIX A

TERMS OF REFERENCE

The purpose and scope of this study as excerpted from the Terms of Reference issued by the U.S. AID are as follows:

Natural Gas Conversion

> "to assess the state of the art for those technologies which can convert natural gas components to the range of white products (gasoline, kerosene, diesel fuel) conventionally produced from imported petroleum in national oil refineries."

Section 2.0, Natural Gas Utilization Options, summarizes and assesses the findings of this study, and Section 3.0, Technical Aspects of Available Routes, addresses in detail the state of the art of the technologies found to be either under development or in operation today to produce transport fuels from natural gas.

Guarantees

> "to describe and evaluate the guarantees that U.S. firms, who are in position to undertake the design, engineering, and construction of facilities in developing countries are willing to offer."

Section 4.0, The Position of U.S. A/E Firms, addresses the guarantees that can be expected from U.S. firms with respect to natural gas to white products projects in developing countries.

Transfer of Technology

> "in a transfer of these technologies to developing countries to assess the risks involved such as in achieving expected product yields, estimated costs, and expected completion date."

Section 5.0, Technology Transfer Considerations, addresses the risks involved in carrying out natural-gas synthetic-fuel projects in developing countries.

APPENDIX B

SOURCES OF INFORMATION

The primary source of information for the data presented in this report has been face-to-face discussions with representatives of selected U.S. companies that are active in the field, and particularly those that participated in the recent Thailand - United States Natural Gas Utilization Symposium.

A copy of an introductory letter from U.S. AID addressed to "whom it may concern", together with a copy of the Terms of Reference (excerpted in Appendix A), was mailed in advance to each company or correspondent in order to establish the authors' bona fides.

Group interviews were arranged with the following:

Mobil Oil, Princeton, NJ on June 13, 1984
Foster Wheeler, Livingston, NJ on June 14, 1984
Brookhaven Laboratories, Long Island, NY on June 15, 1984
Stone and Webster, Boston, MA on June 18, 1984
Fluor, Irvine, CA, on June 19, 1984
Davy McKee, Lakewood, Fl on June 28, 1984

In addition, telephone conversations were held with Celanese Chemical Co. Dallas, Texas and with Accurex, Mountain View, Calif., on the subject of methanol as a transport fuel.

In each group interview, the principal subject of discussion was the particular area of expertise and experience of the company concerned. In all cases, however, the interview ended with a general review of the whole subject, and the authors of this report would like to thank the participants for the many valuable ideas put forward during these impromptu discussions.

Listed below are some of the published references that were considered during the preparation of the report. This should not, of course, be construed as a complete list of references. Copies of many technical papers and brochures were kindly supplied by the companies and correspondents referred to above.

1) Papers Presented at the Thailand/US Natural Gas Utilization Symposium, Under auspices US AID, Bangkok, Thailand, February 7-11, 1984 especially:

   a) Mobil Olefins to Gasoline and Distillate Process (MOGD), by Mobil

   b) Gasoline From Natural Gas, by Fluor

   c) The Production, Economics and Uses of Synthesis Gas, by Stone and Webster

2) Sasol Two and Sasol Three. Versatility in a Proven Route to Syn Fuels.
Fluor, AICHE, New Orleans, Nov. 11, 1981.

3) Production of Automotive Fuels from Coal in South Africa.
Sasol, South Africa. Undated.

4) Emerging Energy and Chemical Applications of Methanol. Opportunities for Developing Countries.
World Bank Study. April, 1983, pp. 1-73.

5) New Synthetic Fuel Routes for Production of Gasoline and Distillate.
Mobil. Nonpetroleum Vehicular Fuels IV, April, 1984.

6) Commercial Use of Mobil ZSM-5 Technology and Structure of ZSM-5 Catalyst.
Mobil. Japan Petroleum Inst: Tokyo, May, 1983.

7) White Paper on New Zealand Synthetic Fuels Corp. Ltd. Venture Contracts.
New Zealand Government. July, 1982.

8) California's Experiences with Methanol-fueled Transit Buses.
Acurex Corp. and California Energy Commission, Ottawa, Can., May 2, 1984.

9) State-of-the-Art Report on the Use of Alcohols in Diesel Engines.
SAE Tech. Paper 840118. USDOE and Mueller Ass. Inc., Detroit, Feb/March, 1984.

10) Methanol Diesel Engine and Its Application to a Vehicle.
SAE Tech. Paper 840116. Japan Auto Research Inst. (JARI) Detroit, Feb/March, 1984

11) Development of Detroit Diesel Allison 6V-92TA Methanol-Fueled Coach Engines.
SAE Tech. Paper 831744. General Motors, San Francisco, Oct/Nov, 1983.

APPENDIX C

METHANOL AS A DIESEL FUEL

The following is a brief summary of current technologies for employing methanol as a substitute transport fuel in heavy vehicles that normally would use diesel fuel. Advantages of methanol include a great reduction in exhaust emissions, especially of particulates, smoke and hydrocarbons. Mileage between refills, however, for pure methanol is only about half that for diesel fuel.

It should be emphasized that most of the technologies discussed are still experimental or in the development stage. The primary purpose of this study is to give the lay reader an overview of the current status of work in the field.

A very brief discussion of diesel-engine operation is in order, with special reference to cetane number. The "cetane number" of a diesel fuel is a measure of the fuel's "auto-ignitability," or ignition quality, in a compression-ignition diesel engine. Ordinary good-quality diesel fuel (cetane number 45-55) ignites quickly and smoothly when it is injected into the hot, highly-compressed air in the cylinder. On the other hand, low cetane-number fuel causes delayed ignition followed by detonation, causing knocking, loss of power, overheating and damage to the engine.

Methanol by itself has an extremely low cetane number (see Table I in the body of this report) which means that straight methanol cannot be used as a direct substitute for diesel fuel in a standard diesel (compression-ignition) engine. Either the engine must be substantially modified (even redesigned and/or rebuilt), or special additives (cetane improvers) must be put in the methanol. Essentially there are three alternatives:

1) Engine modified very substantially to enable it run on pure methanol;

2) Engine modified, probably less substantially than in (1), to enable it to run on a combination of methanol and diesel fuel;

3) Engine modified only minimally to enable it to run on methanol containing additives (cetane improvers).

Examples of each alternative are discussed below.

1.0 Engine to Run on Pure Methanol

An advantage of this system is that only a single fuel, methanol, is carried on the vehicle. However, since mileage, i.e., miles per gallon, on methanol is only about half that on diesel fuel, due to the lower calorific value (see Table I), larger fuel tanks are required on the vehicle. Diesel fuel is eliminated entirely, of course.

1.1 Spark Ignition

Due to the extremely high octane number of methanol (see Table I), a spark plug can be installed in a high-compression (19-to-1) diesel engine to enable the engine to run on pure methanol in a spark-ignition mode. Cylinder head must be modified or, more likely, replaced by a new design with provision for a spark plug. Only a single fuel-injector system is required. Vehicle operation is said to be improved, and smoke and particulates emission are non-existent. Displacement of diesel fuel is 100%, but it is not possible, in most cases, to switch back to diesel fuel once the engine has been modified for spark ignition. (An engine that permitted such a reverse switch would be very useful.)

Vehicle and engine tests are being made in California by M.A.N. of West Germany, and by others. System appears to have excellent prospects.

1.2 Glow Plug, 2-Stroke Engine

This system is being developed by General Motors and is currently being tested on a commercial scale in buses in California. The engine (6V-92TA) runs on pure methanol. The glow plugs and the 2-stroke engine design help to get over the poor ignition quality, i.e., low cetane number, of pure methanol. The glow plugs ensure early, detonation-free ignition. Special engine is required and retro-fitting of an existing diesel engine is probably not possible. Complex controls are said to be necessary to ensure smooth operation. Prospects of the system appear to be very good.

2.0 Engine to Run on Combination of Methanol and Diesel Fuel

In this system, the methanol replaces only part of the diesel fuel. In some schemes the two fuels are mixed and in others, two separate fuel systems and fuel tanks are required on the vehicle and filling stations must provide both methanol and diesel fuel. Nevertheless, the system has certain very positive advantages; see especially 2.4 below.

2.1 Solution of Methanol in Diesel Fuel

Methanol is almost insoluble in, and immiscible with diesel fuel, although it is fairly soluble in gasoline. Thus the solution technique is essentially impractical with diesel fuel, although it can be used effectively with gasoline.

2.2 Emulsions

The use of diesel fuel/methanol emulsions has been tried as a way of combining the two fuels. A serious problem with such emulsions, however, is the excessive cost of the necessary emulsifiers. Only a single injector is used and only a single fuel system is required at the filling station and in the vehicle, which is an advantage. On the other hand,

the emulsions generally tend to become unstable and to separate in storage. Low-temperature characteristics of emulsions are extremely poor. Attempts have been made, with some success, to create the emulsion at the point of use within the engine. This, of course, necessitates two separate fuel systems and fuel tanks, but only a single injector. General opinion seems to be that the use of emulsions is not a very viable option.

2.3 Fumigation

In this scheme, the methanol is vaporized via a carburetor into the main air intake of an otherwise standard diesel engine. Two separate fuel tanks and fuel systems are necessary. At mid-loads, up to 50% of the diesel fuel can be displaced by methanol, but much less at low loads or when idling. System requires complex engine controls. Particulates and smoke emissions are much reduced. Fumigation appears, at least on paper, to be suited to retro-fitting of existing diesel-powered vehicles and therefore may well have merit for use in developing countries.

2.4 Dual-Injection

The diesel fuel and the methanol are stored aboard the vehicle in separate tanks and are injected separately into the cylinder: the diesel fuel first, followed milliseconds later, by the methanol through a second injector in the cylinder head. The important point is that once ignition has taken place, the cetane number of the rest of the fuel becomes immaterial. The high-cetane diesel fuel leads the way and gets things started and the low-cetane methanol follows and provides most of the power.

New cylinder heads, with dual injectors, two separate fuel systems, etc., are required, amounting almost to a new engine. No additives are needed in the methanol except perhaps for 1% of castor oil as a pump lubricant. The system is considered an effective way to displace a large proportion of diesel fuel with methanol -- over 90% at full load and 50-60% at lower loads. Diesel fuel (100%) is used for starting and idling, however. Particulates and smoke are almost eliminated. Maximum power may actually be increased in the case of conventional "smoke-limited" diesel engines. The methanol can contain some dissolved water without ill effect.

Dual injection is considered to be a viable option for utilizing methanol in diesel-engined vehicles. It is being investigated by, amongst others, Daimler Benz of West Germany and also in Japan.

3.0 Engine to Run on Methanol (With Cetane Improvers)

In this system, additives (cetane improvers) are used to bring the cetane number of the pure methanol up from about zero (see Table I) to a conventional value (40-50) where the mixture can substitute directly and completely for diesel fuel. A larger fuel tank on the vehicle is necessary due to lower mileage on methanol.

From 10 to 20% vol. of cetane improver in the methanol may be necessary to bring the cetane number up to an acceptable level. It is believed, however, that present standard methods of cetane-number determination do not accurately rate fuels of this type. Most cetane improvers are nitrogen-based compounds, almost explosives, in fact. Iso-amyl nitrate is typical. Engine tests with methanol containing as little as 5% of ethylene glycol nitrate are said to have been successful. Cetane improvers are very expensive, however, and the cost of their use in methanol is currently prohibitive.

Very few engine modifications are required which, of course, is a great advantage. Larger-capacity fuel-injection pumps are usually necessary. Work is being done on a commercial scale in Brazil by Daimler Benz, using ethanol rather than methanol as the base fuel. Some localized engine wear has been encountered. In spite of the nitrogen in the additives, Nox emissions are reduced.

Until the price of the additives comes down, or additives effective in smaller concentrations are discovered, the cetane-improver option seems to be unattractive. Its great merit is the minimal vehicle and engine modification that would be required, since the methanol (with the additives) simply replaces diesel fuel directly.