PN-AAS-520
ISN: 39488

King Mongkut's Institute of Technology Thonburi
Bangkok 10140 Thailand

SOLAR THERMAL PROCESSES IN THAILAND

Studies on SOLAR DISTILLATION AND SOLAR REFRIGERATION

Submitted to the
National Energy Administration
Ministry of Science, Technology and Energy

Under the
Renewable Nonconventional Energy Project
Royal Thai Government
U.S. Agency for International Development

FOREWORD

Solar thermal energy has been traditionally used in Thailand for many decades for drying crops and salt production. Solar energy applications cover a number of different technologies depending upon the types and places of applications. Some applications have already been commercialized in Thailand, such as solar water heating, photovoltaic generation, etc. Though potentials for solar energy applications are extremely high, a great deal of research and development has to be conducted to make solar energy applications feasible technically, economically and socially.

As a result of the oil crisis in 1973, the 5th National Economic and Social Development Plan identified solar energy as one of the priority areas in the development of alternative energy resources because of its high potential for applications in both rural and urban areas. Solar Thermal Processes has therefore been selected as an area for cooperation between the governments of the United States and Thailand under the Renewable Nonconventional Energy Project (#493-0304).

Solar Thermal Processes is one component of 14 separate components involved in the Renewable Nonconventional Energy Project. Projects carried out include:

Industrial Biogas
Biomass Gasification
Charcoal Improvement
Energy Master Plan Support
Micro-Hydro Project
National Energy Information Center
Pyrolysis of Rice Husks
Regional Energy Centers
Solar Thermal Processes
Solar/Wind Assessment
Stove Improvement
Village Survey
Village Woodlots
Water Lifting Technology

A grant of about US $50,000 was awarded to King Mongkut's Institute of Technology Thonburi (KMITT) by the US Agency for International Development (USAID) Thailand with institutional support from the National Energy Administration, Ministry of Science, Energy and Technology, to conduct research and development on Solar Thermal Processes. The Solar Thermal Processes component is comprised of five sub-components, namely:

Natural Convection Cabinet Drying
Forced Convection Hut Drying
Solar Tobacco Curing
Solar Distillation
Solar Refrigeration

On behalf of the School of Energy and Materials, KMITT, I would like to express my gratitude to USAID for the grant which made the work on Solar Thermal Processes possible. Even with various constraints such as shortages of available time and technical personnel, rigid government regulations, etc., work completed in this component has reached most of its original objectives. In addition to useful results obtained in the component, the Project has stimulated further interest in research and development on solar thermal processes in Thailand far beyond the original scope of the Project.

As leader of the component of Solar Thermal Processes, I would like to thank Mr. John W. Neave and Mr. Mintara S. Watchananai of USAID Thailand, Mr. Prapath Premmani, Mr. Tammachart Sirivadhanakul and Mr. Sompongse Chantavorapap of the National Energy Administration and their colleagues for their tremendous coordinating efforts in spite of a great many tedious government rules and regulations. I am indebted to my co-leader, Dr. Krissanapong Kirtikara and my colleagues, Dr. Surapong Jirarattananon and Dr. Somchart Soponronnarit for their assistance in managing and coordinating the component activities especially during 1983 when I was on leave at the Asian Institute of Technology.

I would also like to thank the sub-component leaders and local experts: namely, Dr. Piyawat Boon-Long of Chiang Mai University, Dr. Sakarindr Bhumiratana, Dr. Ratana (Putranon) Jirarattananon, Dr. Somchart Soponronnarit, and Dr. Suradej Chantranuluck of KMITT and Dr. Sanchai Klinpikul of Prince of Songkla University, for their excellent technical input -- the results of which are reflected in this report. Thanks are due to KMITT Vice Rector Dr. Pibool Hungspreug, to KMITT technical and administrative personnel whose contributions greatly helped facilitate this work.

I finally wish to express my sincere appreciation to Professor M.L. Albertson, Ms. Lana Larsen and their colleagues of the Office of Project Management Support for their coordinating efforts and valuable comments that helped to make the report complete and readable.

Dr. Prida Wibulswas
Professor of Energy Technology, KMITT
Leader of the Component on
Solar Thermal Processes

CONTENTS

PART I: SOLAR DISTILLATION

Page

Acknowledgements 7

EXECUTIVE SUMMARY 9

List of Figures 15

CHAPTER 1 INTRODUCTION

A. Background 19

B. Objectives 19

C. Scope 19

D. Significance 20

E. Organization of Report 20

CHAPTER 2 REVIEW OF LITERATURE

A. Portable Basin-Type Solar Stills 23

B. Low-cost Basin-Type Solar Stills 24

C. Vertical-Surface Solar Stills 24

CHAPTER 3 HEAT AND MASS TRANSFER THEORIES FOR SOLAR DISTILLATION

A. Reynolds Flow 31

B. The Reynolds Flux 32

C. The Driving Force 33

D. Vaporization Processes 33

E. The Modified Reynolds Flow 34

F. Conductances for Solar Distillation 36

G. Determination of Mass Fraction in Solar Stills 37

CHAPTER 4 DESIGNS OF THE PROJECT

A. Basin-Type Solar Still with One Acrylic Plastic Cover 43

B. Modular Basin-Type Solar Stills with Fiber-Reinforced Plastic Bodies 44

C. Solar Still Models with Vertical and Flat Absorbing Surfaces 44

D. Vertical Solar Still with Flat Acrylic Covers 45

CONTENTS (continued)

CHAPTER 5 TEST PROCEDURES — *Page*

A. Basin-Type Solar Still with One Acrylic Plasti Cover 57

B. Modular Basin-Type Solar Still with Fiber-Reinforced Plastic Bodies 57

C. Solar Still Models with Vertical and Flat Absorbers 58

CHAPTER 6 ANALYSIS AND DISCUSSION OF RESULTS

A. Basin-Type Solar Still with One Acrylic Plastic Cover 61

B. Modular Basin-Type Solar Still with Fiber-Reinforced Plastic Bodies 61

C. Solar Still Models with Vertical and Flat Absorbing Plates 66

CHAPTER 7 CONCLUSIONS 73

CHAPTER 8 RECOMMENDATIONS 77

PART II: SOLAR REFRIGERATION

Acknowledgements 81

EXECUTIVE SUMMARY 83

List of Tables 85

List of Figures 87

CHAPTER 1 INTRODUCTION

A. Historical Background 91

B. Objectives 91

CHAPTER 2 THEORY

A. Principles Underlying Operation 95

B. Thermodynamic Considerations 98

CHAPTER 3 REVIEW OF LITERATURE

A. Solar Refrigeration Elsewhere 103

B. Solar Refrigeration in Thailand 106

CONTENTS (continued)

Page

CHAPTER 4 PROJECT DESIGN

A. Project Plan 115

B. Material Quantity in the System 115

C. Heat Balance in the System 116

D. Engineering Design of the Model 116

E. Design of the Prototype 121

CHAPTER 5 TECHNIQUES AND PROCEDURES

A. Measurement Methods 127

B. Test Procedures 127

CHAPTER 6 ANALYSIS OF RESULTS AND DISCUSSION 133

REFERENCES 139

ANNEX "Solar Stills with Vertical and Flat Absorbing Surfaces" by M. Ramli and P. Wibulswas, 1984 143

Previous Page Blank

PART I

SOLAR DISTILLATION

Previous Page Blank

Vertical Surface Solar Still Model

Previous Page Blank

ACKNOWLEDGEMENTS

As the author of this report, and the leader of the subcomponent on Solar Distillation, I wish to express my sincere thanks to the U.S. Agency for International Development (USAID) for providing generous financial support and to the National Energy Administration, Mr. Prapath Premmani, Secretary General, Mr. Tammachart Sirivadhanakul, Deputy Secretary General, and Mr. Sompongse Chantavorapap, Project Manager, and the Office of Project Management and Support, Dr. Maurice L. Albertson, Senior Technical Project Management Expert and Mrs. Lana Larsen, Editor, for their patient, understanding and successful coordinating efforts. Thanks are also extended to my co-researchers at KMITT, Dr. Suradej Chantranuluck, Assistant Professor Tanongkiat Kiatsiriroat, Mr. Pichai Namprakai, Mr. Sirichai Thepa, Mr. Somyos Tadtium, Mr. Tongbai Attasreth and Dr. Krissanapong Kirtikara, for their tremendous inputs into this study.

The research team wishes to thank KMITT and its personnel for their cooperation regarding premises, laboratories, workshops and administrative work, etc., which made this work possible.

Dr. Prida Wibulswas
Professor of Energy Technology
King Mongkut's Institute of
Technology, Thonburi (KMITT)

Previous Page Blank

EXECUTIVE SUMMARY

In many rural and urban areas, clean water is needed for drinking, domestic and other specific uses, such as in schools, laboratories, health posts, etc. The objective of this study is to develop solar stills suitable for various applications.

Although a few studies had already been conducted in Thailand on portable solar stills, they were confined to laboratory tests and only with conventional horizontal absorbing surfaces. This study has taken into consideration not only materials suitable for field operation but also other possible designs of solar stills.

The first design of the modular basin-type solar still in this study consisted of a double-wall basin made of fiber-reinforced plastic. To provide a good absorbing surface, black paint was mixed directly with resin that was used for making the basin floor. The cover of the still was made of transparent glass of 3 mm thick and inclined at an angle of 14 degrees to the horizontal. The still had the total absorbing area of 1 m^2. At the annual average daily global radiation of 17 MJ/m^2 d, the daily distillation rate obtained from the still is estimated from the test results to be about 1.8 l/m^2 d. Sixteen additional solar stills of the same design were then constructed and put into field tests at a temple, two health posts and a hospital. After long-term tests up to seven months, it was observed that distilled water was too acidic with a pH of about 4.5 and yielded a strong smell of resin.

A modified design of the modular basin-type solar still consisted of an outer shell made of fiber-reinforced plastic and an inner basin (liner) made of aluminium. Small pieces of charcoal were placed on the basin floor to provide a good absorbing surface and to absorb any undesirable smell in the raw water. Laboratory results showed that this new design produced the same distillation rate as the design without the inner basin. Twelve additional modified stills were fabricated. They later replaced the stills at the temple and health posts. Modified stills of 4 sq m will also be installed and tested at a school to provide distilled water for laboratory use. It is expected that long-term test results from these modified stills will be satisfactory.

In some cases, especially in urban areas where horizontal space may not be available for a large installation, it has been shown that vertical surface solar stills may provide a solution. An investigation on a vertical surface still tested indoors indicated that from the mass-transfer consideration, an optimum gap between the transparent glass cover and absorbing surface was about 60 mm. Outdoor tests on the still with optimum gap setting indicated that at the annual average daily global radiation, the daily distillation rate is expected to be at 1.8 l/m^2 d. However, outdoor tests on two other solar stills suggested that

a wider gap between the vertical absorbing surface and transparent cover provides better radiation transmission especially around noon. A compromise design of a vertical-surface solar still with an absorbing area of about 2.4 sq m is being constructed. It is hoped that within two months, the new design will be ready for long-term outdoor tests.

Predictions of rates of distillation were attempted by using the modified Reynolds-Flow model. Deviations from the predicted values were found to be within ± 10% of the measured values. Applications of the model were restricted to quasi-steady state conditions around noon. The predictions also indicate that an empirical relationship developed by Cooper (1966) is not applicable to vertical-surface solar stills.

Previous studies on solar stills with concrete basins indicated that although a concrete-basin still required a low initial cost, the concrete basin tended to crack within two years. An improved design of a concrete-basin solar still with an absorbing area of about 6 sq m is being constructed. It is expected that within two months, the still will also be ready for long-term outdoor tests.

It is now clear that although the improved designs of the three types of solar stills have been made possible by test results obtained in this Project, more time will still be needed for long-term outdoor tests on the three types of improved solar stills. It is hoped that after the Project activities end in 1984, conclusive results may be drawn from the long-term tests on the improved solar stills, and practical recommendations can then be made with a greater degree of certainty.

A number of economic analysis on various types of solar stills developed in Thailand were attempted without the costs of installation space. They indicated that the costs of distilled water obtained from the solar stills varied from about ฿ 0.1-1.0 (not more than 4 US cents) per liter, depending upon the types of the stills. Since the current price of distilled water sold in the local market is about ฿ 5 (20 US cents) per liter, it can be concluded with confidence, that distilled water obtained from the solar stills developed in this country is economically competitive.

CONCLUSIONS

A. BASIN-TYPE SOLAR STILL WITH ONE ACRYLIC PLASTIC COVER

1. The acrylic plastic cover is less prone to be broken by accidents than the glass cover. Resistance to degradation by solar radiation of the plastic cover however, may be less than that of the glass cover.

2. Charcoal chips are preferable as the absorbing material to the black butyl rubber sheet since the former perform equally well, are cheaper and locally produced, and they can also absorb any undesirable smell in raw water.

3. All the three improvement methods on the vertical back wall of the still increased the daily distillation rate by about 13%. Therefore, the addition of the black cotton cloth is preferable since it is the cheapest method.

B. MODULAR BASIN-TYPE SOLAR STILLS WITH FIBER-REINFORCED-PLASTIC

1. After long term tests, distilled water obtained from sixteen modular basin-type solar stills with double-walled fiber-reinforced-plastic bodies was too acidic with pH values of about 4-4.5.

2. When the fiber-reinforced-plastic inner basins were replaced by aluminium ones and charcoal chips were enployed as the absorbing material, the quality of distilled water improved considerably with pH values of about 6.5. The water is now suitable for drinking.

C. SOLAR STILL MODELS WITH VERTICAL AND FLAT ABSORBING PLATES

1. The solar still model with the vertical glass covers gave higher distillation rates than those with the plastic covers by about 10%.

2. At a high global radiation above 20 MJ/m^2 d, the still models with the vertical absorbers facing east-west yielded higher distillation rates than those with the absorbers facing north-south. At a radiation below 20 MJ/m^2 d, the reverse results occurred.

3. Distances between the vertical absorbers and covers were much wider than the optimum gap obtained from the mass transfer consideration alone.

RECOMMENDATIONS

A. BASIN-TYPE SOLAR STILL WITH ONE ACRYLIC PLASTIC COVER

1. Long-term outdoor tests should be conducted on the still to determine the life-times of the acrylic plastic cover and of the cotton cloth on the vertical back wall.

2. An economic and social assessment of the still should be carried out before it is promoted for field applications.

B. MODULAR BASIN-TYPE SOLAR STILLS WITH FIBER-REINFORCED PLASTIC BODIES

1. After long-term field tests, economic and social evaluation of the stills with aluminium inner basins should be attempted by means of large-scale demonstration units.

2. A more suitable resin should be selected as the material for the inner basin in order that distilled water does not become too acidic. Advantages of the true fiber-reinforced plastic basin can then be achieved.

C. SOLAR STILLS MODELS WITH VERTICAL & FLAT ABSORBERS

1. Taking the effects of mass transfer and global radiation into account, true optimum gaps between the vertical absorbing plates and covers should be determined for east-west and north-south orientations.

2. Transient phenomena inside the vertical solar still should be studied so that the still performance can be accurately predicted.

3. Long-term outdoor tests should be conducted on large vertical-surface solar stills with acrylic covers facing north-south and east-west directions so that their technical and economic performance can be assessed.

D. MASS TRANSFER THEORY

The prediction of the distillation rate by means of the convective mass transfer theory in this work still requires the values of the wet and dry bulb and interface temperatures inside the solar still. The theory should be further developed so that the measurement of these temperatures will not be needed for the prediction.

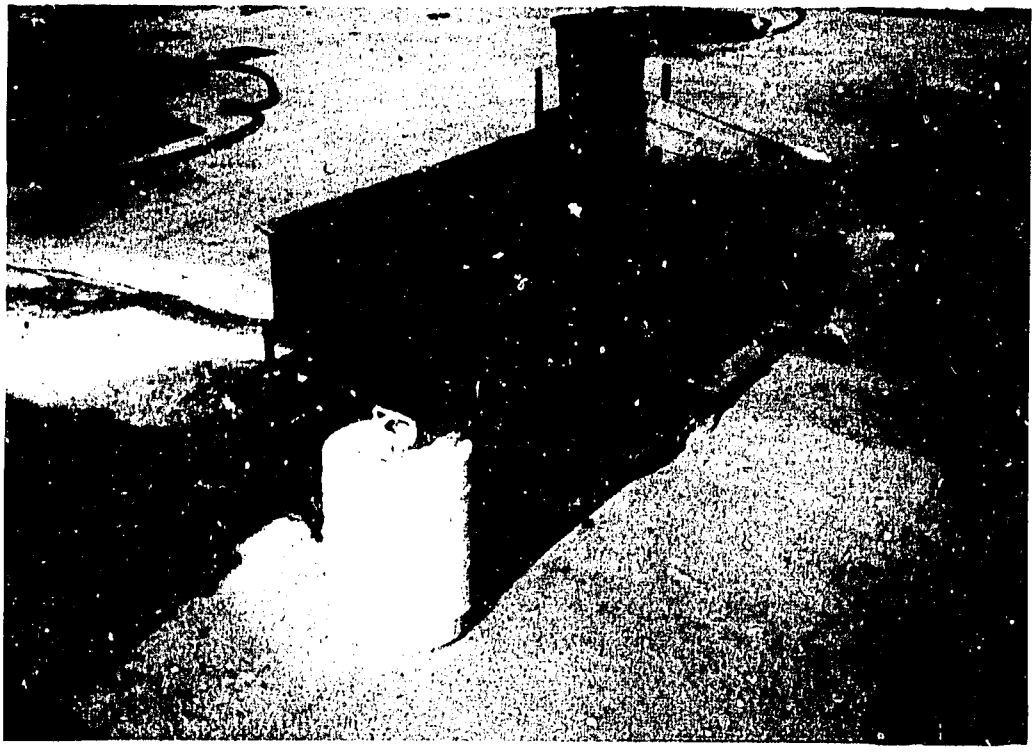

Modular Basin-Type Solar Still

Preceding Page Blank

LIST OF FIGURES

Figure Page

1. Variation of the rate of distillation with the slope of the acrylic cover, horizontal absorbing surface (Wibulswas, et al, 1982) 23

2. Comparison of rates of distillation of solar stills with horizontal and vertical absorbing surfaces (Wibulswas, et al, 1982) 24

3. Productivity vs Gap Width with Constant Input Power for the Vertical Still Model with Glass Covers (outside energy provided by electrical heat source. Ramli and Wibulswas 1984) 26

4. Comparison between measured and predicted rates of distillation in different solar stills (Ramli and Wibulswas, 1984) 27

5. Reynolds flow model 31

6. Modified Reynolds flow model 35

7. Plastic-cover solar stills having a reflecting back wall and a regenerative back wall 49

8. Modular basin-type solar still having fiber reinforced plastic body (Kiatsiriroat and Chantranuluck, 1982) 50

9. Solar still model with vertical and flat absorber (Atthasreth, 1984) 51

10. Diagram of the Vertical Solar Still prototype 52

11. Comparison between two absorbing materials namely black butyl rubber sheet and charcoal chips. 62

12. Comparison of distillation rates obtained from three methods of improvement 63

13. Variation of daily distillation rate with daily global radiation 64

14. Physical and chemical analysis of raw and distilled water from basin-type solar still with fiber-reinforced plastic body. (This was a sample taken soon after the field tests began before the pH dropped to 4-4.5). 65

15. Variations of daily distillation rates with horizontal global radiation for vertical solar stills with glass and plastic covers facing east - west. 67

16. Variations of daily distillation rates with horizontal global radiation for vertical solar stills with glass and plastic covers facing north - south 68

LIST OF FIGURES (continued)

Figure Page

17. Calibration graph between the wet bulb temperature in an enclosed spaced against the true wet bulb temperature in open space, in degrees Celsius. 69

18. Comparison between predicted and measured mass transfer rates inside the vertical solar sill with the absorbing surfaces facing east-west directions. 70

Chapter 1

Introduction

Previous Page Blank

INTRODUCTION

This report discusses the development, design and construction of three types of solar stills: the basin-type solar still with one acrylic plastic cover, the modular basin-type solar still with a fiber-reinforced plastic body, and the solar still model with vertical and flat absorbing surfaces. Technical and economical aspects are also reported.

A. HISTORICAL BACKGROUND

Solar distillation has already been used for salt production in Thailand for hundreds of years. It has been estimated that the solar energy currently used in salt production in Thailand is equivalent to about 19 million barrels of oil per annum (Wibulswas, 1982).

The basin-type solar still was first designed and built in 1872 near Las Salinas, Chile, by Carlos Wilson (Malik, 1982). The still had a total absorbing area of 4700 m^2 and was in operation for about 40 years. No work on solar distillation was published after the 1880's until the end of the first World War. Analysis of the performance of the basin-type still by computer simulation was first presented by Cooper in 1969. The first solar still in Thailand was built by Professor Pongsakdi Vorasuntrosot and Pimol Kolkit in 1954 (Gong, 1980). Since then, there have been a number of research and development activities on various types of solar stills for different applications in Thailand.

B. OBJECTIVES

The objectives of this study are to develop, test and demonstrate, under prevailing conditions in Thailand, various types of solar stills suitable for providing:

1. Clean drinking water, particularly in rural areas,

2. Distilled water for laboratory and industrial uses.

C. SCOPE

Research, development, design, construction, and technical and economic assessment of various types of solar stills (both horizontal and vertical) for different applications are covered in this study. In addition to fulfilling the main objectives already stated, this study will emphasize:

1. The use of locally available materials,

2. Low costs of distilled water produced by solar stills,

3. Durability of the stills, and

4. Construction and operation of the stills.

D. SIGNIFICANCE

In rural areas, clean drinking water is often scarce. It can, of course, be obtained by boiling raw water using firewood or charcoal as fuel which is usually available in rural areas, but a cost is involved. Solar distillation offers an attractive alternative. Apart from the hygienic reason, solar distillation may help reduce the consumption of fuel wood and consequently, depletion of forests in the country.

Distilled water is extensively used in laboratories and industrial processes. It is usually obtained by condensing steam raised by oil or electricity. Distilled water currently costs about 3-5 Baht (less than 20 US cents) per liter. Solar distillation has potential to provide cheaper distilled water and to reduce the consumption of conventional energy.

E. ORGANIZATION OF REPORT

This report will briefly discuss the literature on portable basin-type solar stills, low-cost basin-type solar stills and vertical surface solar stills in Chapter 2. Heat and mass transfer theories are discussed in Chapter 3 and provide the basic framework for the designs of the improved solar stills discussed in Chapter 4. Chapter 5 includes Test Procedures, Chapter 6, Analysis and Discussion of Results, and Chapters 7 and 8 include the Conclusions and Recommendations.

Details of calculations can be found in "Solar Stills with Vertical Absorbing Surfaces" an article written by Ramli and Wibulswas in 1984 and which is printed in its entirety in the Annex.

Chapter 2

Review of the Literature

Previous Page Blank

REVIEW OF THE LITERATURE

A. PORTABLE BASIN-TYPE SOLAR STILLS

In 1975, Maung Nay Thun & Aftab studied four portable basin-type solar stills with different heights. Each still had one glass cover inclined at 13° 44' to the horizontal and was tested at the Asian Institute of Technology (AIT) which is at the lattitude of 13° 44'. Test results showed that the still with the lowest front wall of 80 mm yielded the highest efficiency of about 30%.

Six basin-type solar stills having glass covers inclined at different angles from 10 to 20 degrees were tested by Wibulswas at King Mongkuts Institute of Technology, Thonburi (KMITT) in 1977. The best angle of inclination which yielded the highest rate of distillation was found to be 14 degrees to the horizontal which confirmed the angle chosen by the AIT workers.

An investigation to determine the best angle of inclination for the plastic cover was conducted at KMITT by Wibulswas, et al., in 1980. Six basin-type solar stills having acrylic plastic covers inclined at different angles from 20 to 50 degrees were tested. It was found that the angle of inclination of 40 degrees to the horizontal yeilded the highest distillation rate at about 1.7 l/m^2 d at the annual average daily global radiation of 17 MJ/m^2 d (see Figs. 1 & 2). It was also observed that drop-wise condensation occurred underneath the plastic cover, instead of film-wise condensation as in the case of the glass cover.

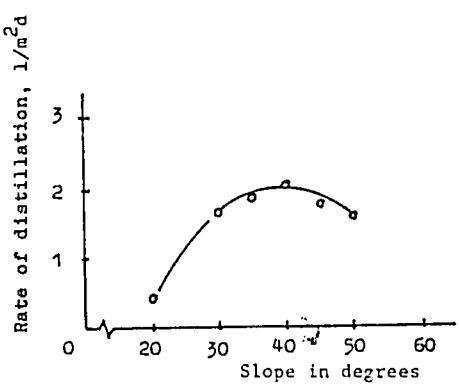

Fig. 1 Variation of the rate of distillation with the slope of the acrylic cover, horizontal absorbing surface (Wibulswas, et al, 1982)

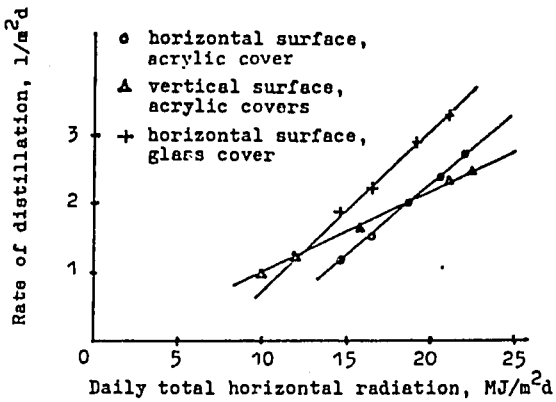

Fig. 2 Comparison of rates of distillation of solar stills with horizontal and vertical absorbing surfaces (Wibulswas, et al, 1982).

B. LOW-COST BASIN-TYPE SOLAR STILLS

A low-cost basin-type solar still was developed at KMITT by Wibulswas and Pothihom in 1978. The basin of the still was made of mortar mixed with rice husk and built on the ground. The mortar on the basin floor contained black iron-oxide powder to provide a good absorbing surface. The glass cover of 3 mm thick was inclined at 14 degrees to the horizontal. The first cost of the still was then estimated at about US $25.

A double-sloped stationary solar still with a mortar basin was also investigated at KMITT by Uppalanond in 1979. Its merit lies in the fact that the shorter basin, compared with the single-sloped still, is less prone to cracking. The still yielded a similar performance to the single-slope one.

C. VERTICAL-SURFACE SOLAR STILLS

Very little information has been published on vertical-surface solar stills. In 1975, Coffey first investigated a design of a solar still having a vertical cylindrical surface in Australia. The study did not cover heat or mass transfer analysis inside the still.

A solar still having a vertical cylindrical absorber of 100 mm diameter and a curved acrylic plastic cover was designed, constructed and tested in 1981 at KMITT by Wibulswas, et al. The distance between the absorbing surface and the curved cover was about 100 mm. The still yielded a distillation rate of 1.73 l/m^2 d at the annual average global radiation of 17 MJ/m^2 d.

To determine the optimum distance between the absorbing surface and the glass cover, a physical model of a still having a vertical flat absorber and adjustable glass covers was designed and tested indoors by electrical heating at AIT (Ramli and Wibulswas, 1984, report included in Annex I). The optimum distance was found to be about 55 mm as shown in Figure 3. A prototype solar still having a vertical flat absorber of 1.86 m^2 was designed, constructed and tested outdoors with the optimum distances between the glass covers and absorbing surfaces. The rate of distillation was found to be about 2 l/m^2 d at the annual average global radiation of 17 MJ/m^2 d when the absorbing plate faced an east-west direction as shown in Figure 4.

Predictions of the distillation rates using a simplified mass transfer theory based upon the Reynolds flow model were also attempted. Predicted values were found to deviate from the measured values by about 10% (see Fig. 4).

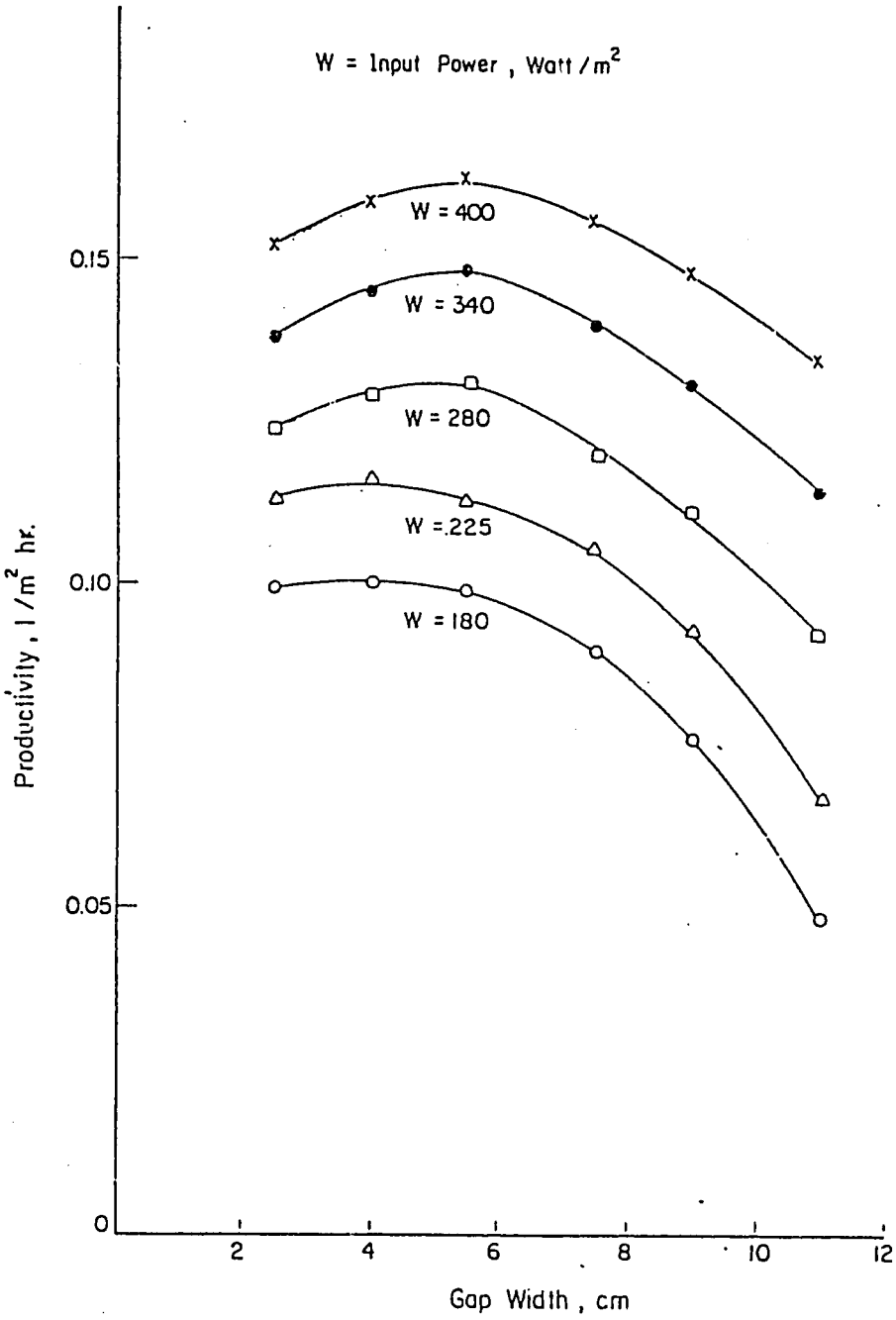

Fig. 3 Productivity vs Gap Width with Constant Input Power for the Vertical Still Model with Glass Covers (outside energy provided by electrical heat source, Ramli and Wibulswas, 1984).

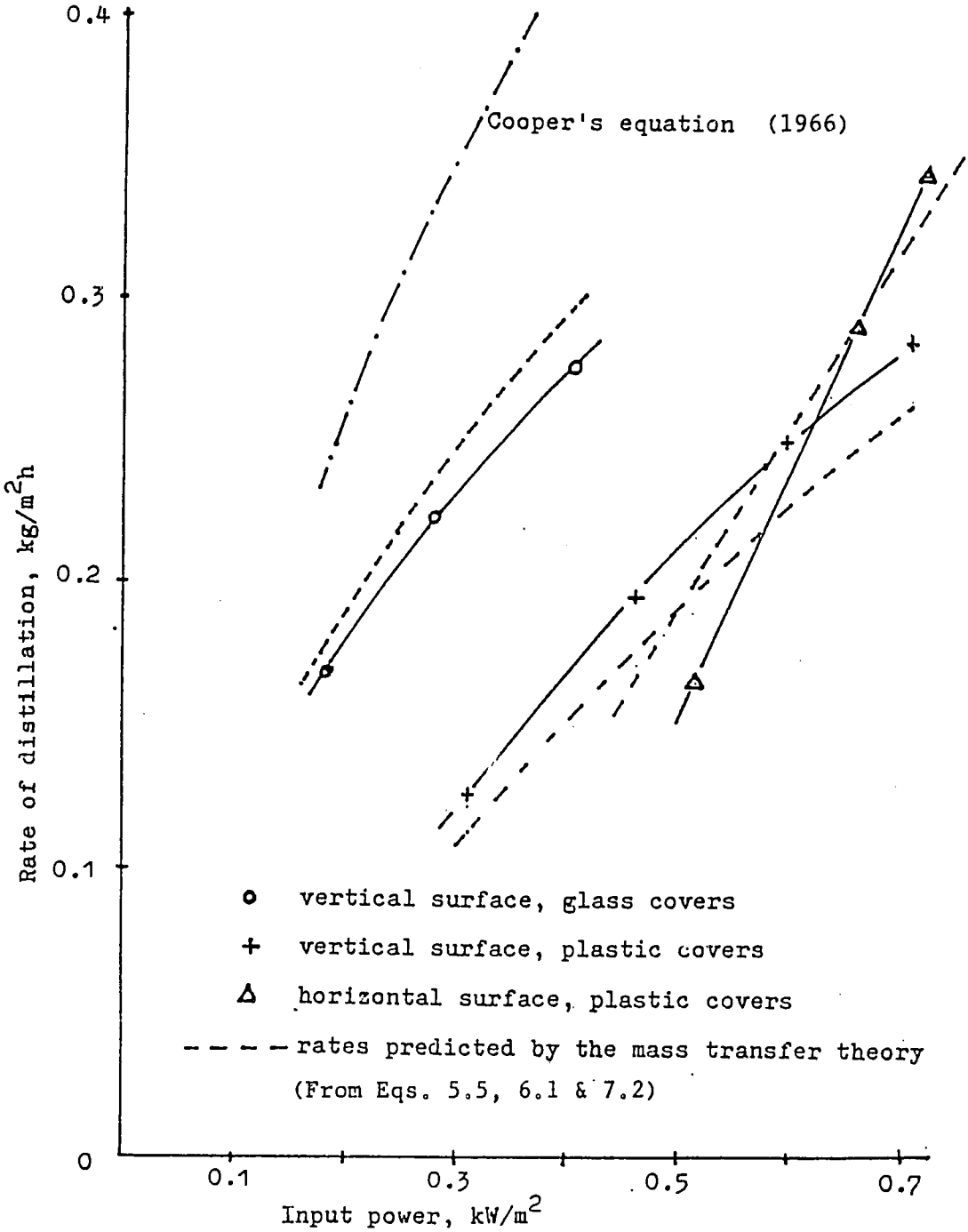

Fig. 4 Comparison between measured and predicted rates of distillation in different solar stills (Ramli and Wibulswas, 1984).

Previous Page Blank

Chapter 3

Heat and Mass Transfer Theories for Solar Distillation

Previous Page Blank

HEAT AND MASS TRANSFER THEORIES FOR SOLAR DISTILLATION

Although the distillation process involves simultaneous heat and mass transfer, analysis of the latter in solar distillation is often avoided by many investigators as they feel that mass transfer theory is too complicated for most practical uses. However, there exists a simplified mass transfer theory, based on Reynolds flow, which was developed by D.B. Spalding (1963) and later advocated by W.M. Kays (1980). It has been used for predicting mass transfer rates in vaporization processes and simple chemical reactions with reasonable accuracy.

A. REYNOLDS FLOW

Reynolds (1874) proposed a hypothetical model of fluid flow at the neighborhood of the interface of a two-phase system as shown in Fig. 5. The G-surface lies in the bulk state of the considered phase into which mass flux, $\dot{m}''$ is transferred. The S and L surfaces are parallel to the interface but separated from it by a distance of a few mean free paths of molecules. The F-surface lies in the bulk state of the neighboring phase. The $\dot{q}''_S$ and $\dot{q}''_L$ are heat transfer fluxes towards and from the interface respectively.

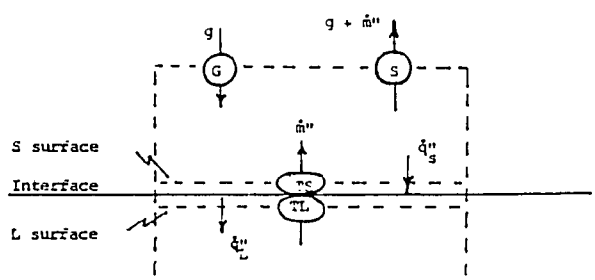

Fig. 5 Reynolds Flow Model

In the model, a flux g of fluid at the G-state moves through the G-surface towards the S-surface and another flux, $g + \dot{m}''$, of fluid at the S-state moves through the G-surface away from the S-surface. The flux g is called the Reynolds flux or mass transfer conductance.

B. THE REYNOLDS FLUX

Since the Reynolds flux is probably factitious, it may be obtained only indirectly from other measurable quantities.

At the interface, the convective heat transfer flux

$$\dot{q}''_s = \alpha\ (t_G - t_S) \qquad (3.1)$$

in which α = surface heat transfer coefficient

t_G, t_S = temperature at the G and S-states respectively

Apply the steady flow energy equation to the GS-control volume in Fig. 9, assuming that the kinetic and potential energy terms are small:

$$\dot{q}''_s = g.\ C_G\ (t_S - t_G) \qquad (3.2)$$

Adding Eqs. 3.1 and 3.2 yields $g = \alpha/C_G$ (3.3)

in which C_G = specific heat at constant pressure

From heat transfer data, the Reynolds flux can be deduced for many practical situations. However, g_h^* will be used instead of g to emphasize that it is obtained from the heat data with no mass transfer.

By definition, Stanton number, $St = \alpha/GC_p$

in which G = mass velocity

Hence, by Eq. 3.3 $St = g_h^*/G$ (3.4)

Also by definition, Nusselt number, $Nu = \alpha\ L/k$

in which L = characteristic length, and

k = thermal conductivity of the fluid

Thus, by Eq. 3.3 $$Nu = \frac{g_h^* G}{k/C_p} \qquad (3.5)$$

C. THE DRIVING FORCE

D.B. Spalding proposed a simple relation for calculating the mass transfer flux:

$$\dot{m}'' = B.g \tag{4.1}$$

in which B is called the driving force.
B can be determined by applying a conservation law to a suitable fluid property P entering or leaving the GS-control volume in Fig. 5.

In the steady-state, the rate of property P which enters the control volume must be equal to the rate which leaves that control volume.

$$g.P_G + \dot{m}'' P_T = (g + \dot{m}'') P_S$$

$$\frac{\dot{m}''}{g} = \frac{P_G - P_S}{P_S - P_T}$$

By Eq. 4.1

$$B = \frac{P_G - P_S}{P_S - P_T} \tag{4.2}$$

Subscripts G, S and T denote the bulk, interface and transfer states, respectively.

D. VAPORIZATION PROCESSES

Vaporization occurs in a binary system in which the considered phase is a mixture of air and water vapor and the neighboring phase is water. A suitable property P for the system is the mass fraction or concentration of H_2O, m_{H_2O}, which is defined as mass of H_2O per unit mass of the mixture.

$$m_{H_2O} = \frac{\text{mass of } H_2O}{\text{mass of mixture}} \tag{5.1}$$

From Eq. 4.2

$$B = \frac{m_{H_2O,\,G} - m_{H_2O,\,S}}{m_{H_2O,\,S} - m_{H_2O,\,T}} \tag{5.2}$$

In vaporization, H_2O is the only transferred substance

Thus Eq. 5.2 becomes:

$$B = \frac{m_{H_2O,\,G} - m_{H_2O,\,S}}{m_{H_2O,\,S-1}} \qquad (5.3)$$

E. THE MODIFIED REYNOLDS FLOW

D.B. Spalding found experimentally that the mass flux predicted by Eq. 4.1 differed considerably from its actual value especially at a high mass transfer rate. He then proposed the modified Reynolds flow as shown in Fig 6.

By applying the original Reynolds flow to a much smaller control volume Y' Y, which has a conductance g^+, and applying the conservation law of the property P to the Y' Y control volume, the following relation is obtained.

$$\frac{P_{Y'} - P_Y}{P_Y - P_T} = \frac{\dot{m}''}{g^+}$$

If the distance between Y' and Y is infinitely small, the above equation becomes:

$$\frac{\dot{m}''}{g^+} = \frac{dP_Y}{P_Y - P_T}$$

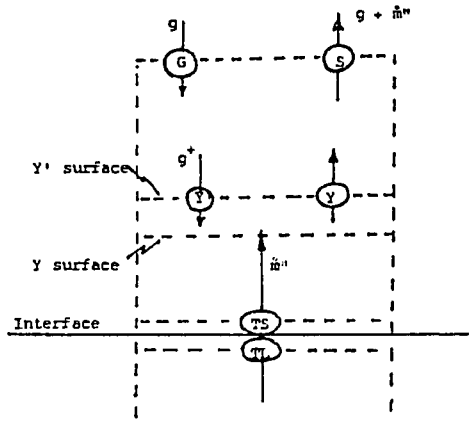

Fig. 6 Modified Reynolds Flow Model

By integrating from the S to G - surface,

$$\sum_{S}^{G} \frac{\dot{m}''}{g+} = \ln \left[P_Y - P_T \right]_{S}^{G}$$

$$\dot{m}'' \sum_{S}^{G} \frac{1}{g+} = \ln \left[1 + \frac{P_Y - P_S}{P_S - P_T} \right]$$

$$= \ln (1 + B) \qquad (6.1)$$

Boundary condition: when the mass transfer flux is small, ln (1 + B) →

$$\dot{m}'' \sum_{S}^{G} \frac{1}{g+} = B = \frac{\dot{m}''}{g*} \qquad \text{by Equa. 4.1}$$

$$\sum_{S}^{G} \frac{1}{g+} = \frac{1}{g*}$$

Thus, by Equa. 6.1, $\dot{m}'' = g^* \ln (1 + B)$ (6.2)

F. CONDUCTANCES FOR SOLAR DISTILLATION

Mass transfer conductance in the stills may be conveniently deduced from corresponding heat transfer formula (Bayley, Owen and Turner, 1972).

For free convection from a horizontal surface:

$$Nu = \frac{hl}{K} = 0.54 \ (Gr.\ Pr)^{1/4}$$

The corresponding mass transfer equation is

$$\frac{g^{*}l}{\mu/Sc} = 0.54 \ (Gr.\ Sc)^{1/4} \qquad (7.1)$$

For free convection from a vertical surface:

$$Nu = \frac{hl}{K} = 0.59 \ (Gr.\ Pr)^{1/4}$$

The corresponding mass transfer equation is

$$\frac{g^{*}l}{\mu/Sc} = 0.59 \ (Gr.\ Sc)^{1/4} \qquad (7.2)$$

in which Sc = Schmidt number for water vapor in the air
Gr = Grashhof number of the air
Pr = Prandtl number of the air

P.I. Cooper (1966) suggested the following empirical formula for estimating the distillation rate of a solar still with a horizontal absorbing surface.

$$\dot{m}'' = 22.78 + [5.66 \times 10^{-10} \ (1.8\ T_w - 459.7)^{5.23}] \ (T_w - T_g) \times 10^{-7} \qquad (7.3)$$

$kg/m^2.s$

in which T_w = temperature of the water, and

T_g = temperature of the glass cover

G. DETERMINATION OF MASS FRACTION IN SOLAR STILLS

By measuring wet and dry bulb temperatures, specific humidity can be conveniently determined inside solar stills having horizontal and vertical absorbing surfaces. Dry and wet bulb temperatures at the G and S states in a solar still are usually determined by chromel-alumel thermocouples at several locations. From their average values, specific humidity and hence the mass fractions at the S and G states are determined by means of equations (3), (4), and (5) in the Annex. The driving force is then calculated from Eq. 5.3.

The mass transfer conductances are deduced from the mass transfer equations for natural convection from horizontal and vertical surfaces, Eqs. 7.1 and 7.2. The distillation rates are then estimated from Eq. 6.2 .

It should be noted that the wet bulb thermometers are effectively constructed by wrapping wet wicks around the junctions of the thermocouples placed inside the stills. Since there is no draft in the stills, the wet bulbs will not really be at adiabatic saturation states. A correction can be made by comparing the reading of a wet bulb thermometer inside a closed container with that of a wet bulb thermometer placed in a strong draft outside the container.

Previous Page Blank

Basin-Type Solar Still with One Glass Cover (Wibulswas, et. al., 1977)

Basin-Type Solar Still with One Acrylic Plastic Cover (Wibulswas, et al., 1982)

Previous Page Blank

Chapter 4

Designs of the Project

Preceding Page Blank

DESIGNS OF THE PROJECT

A. BASIN-TYPE SOLAR STILL WITH ONE ACRYLIC PLASTIC COVER (Wibulswas and Tadtiam, 1983)

The basin of the plastic-cover solar still was initially made of galvanized steel sheet. An acrylic plastic sheet of 3 mm thick was used as the transparent cover of the still. The angle of inclination of the cover was set at the optimum angle of 40 degrees to the horizontal as shown in Fig. 7. Two types of absorbing materials were tested, namely butyl rubber sheet and charcoal chips of about 10 mm diameter, but the charcoal chips were finally selected for subsequent tests, because the charcoal chips were found to be equally effective but made of local material and much less expensive (see Fig. 11).

Three methods of improvement of the still by means of the back vertical wall were carried out. First, the galvanized back wall was replaced by a polished stainless steel sheet which reflected additional direct and diffuse solar radiation onto the absorber at the floor of the basin. The reflectance of the polished stainless steel wall was about 0.65.

In the second method of improvement, raw water was allowed to trickle down the outside surface of the back wall and then fed back into the basin. A part of the latent heat of condensation was transferred from the inside surface of the back wall to the raw water. A regenerative effect was therefore achieved. The feed rate of the raw water was controlled by a constant head tank in such a way that it was only slightly larger than the daily rate of distillation.

The last method of improvement was done by covering the back wall of the still with a piece of black cotton cloth in order to provide an additional absorbing surface. Raw water in the basin was drawn up to about the lower half of the black cloth. Solar radiation absorbed by the cloth produced an additional amount of distilled water.

B. MODULAR BASIN-TYPE SOLAR STILLS WITH FIBER-REINFORCED PLASTIC BODIES (Kiatsiriroat and Chantranuluck, 1982)

Portable basin-type solar stills that had been previously developed had metallic bodies made of either stainless steel galvanized steel or aluminium (Maung and Aftab, 1976, Wibulswas, et al., 1982, and Wibulswas and Pothihom, 1980). In this study, fiber-reinforced plastic was first chosen as the material for the basin for two reasons. First, fabrication of fiber-reinforced plastic is labor-intensive and does not require expensive tools such as welding machines, etc., hence it is suitable for rural areas. Second, fiber-reinforced plastic is light and thus very convenient to transport and assemble (see Fig. 8).

Sixteen basin-type solar stills with fiber-reinforced plastic bodies were constructed. Each still had a plastic basin of 0.6 m wide and 1.8 m long. The front wall of the basin was 0.1 m high. Styrofoam sheets of 0.25 mm were inserted between the inner and outer walls of the basin. The thickness of each wall was about 2 mm. Black paint was added to the resin coated on the floor of the basin in order to provide a good absorbing surface. The transparent glass cover 3 mm thick made an angle of 14 degrees with the horizontal.

After seven months of field tests at different locations in the country it was found that distilled water obtained from the stills was too acidic with pH values of 4-5. The stills were subsequently withdrawn and later on their inner surfaces were lined with aluminium sheets. Small pieces of charcoal were laid on the floors of the basins in order to provide good absorbing surfaces and to absorb any undesirable smell in the raw water.

C. SOLAR STILL MODELS WITH VERTICAL AND FLAT ABSORBING SURFACES (Atthasreth, 1984)

Two solar stills having the same dimensions were designed and constructed (see Fig. 9). To investigate the effects of different cover materials, one still had transparent glass covers while acrylic plastic covers were employed on the other still. Dimensions of both covers were 0.43 x 0.43 m^2 cross sectional area and 1.2 m high. Both stills had identical vertical absorbing plates made of black cotton cloth of 0.28 m wide and 1.1 m high. Raw water from a constant head tank was fed on to the top edge of the absorbing plate in each still. Collecting troughs were provided at the lower edges of the inner surfaces of the vertical covers.

For mass transfer and heat transfer predictions, 38 chromel-alumel thermocouples were attached at different locations in the stills. A multi-channel thermal logger was employed for recording thermocouple readings. Solarimeters and actinometers were used for measuring total, diffuse and direct radiation during test runs.

D. VERTICAL SOLAR STILL WITH FLAT ACRYLIC COVERS

The design of this still is very similar to the one shown in Annex I except that an acrylic cover is used (see Fig. 10). Results of the outdoor tests should be available within a year.

Previous Page Blank

Vertical Surface Solar Still with a Cylindrical Acrylic Plastic Cover. (Wibulswas, et al., 1982)

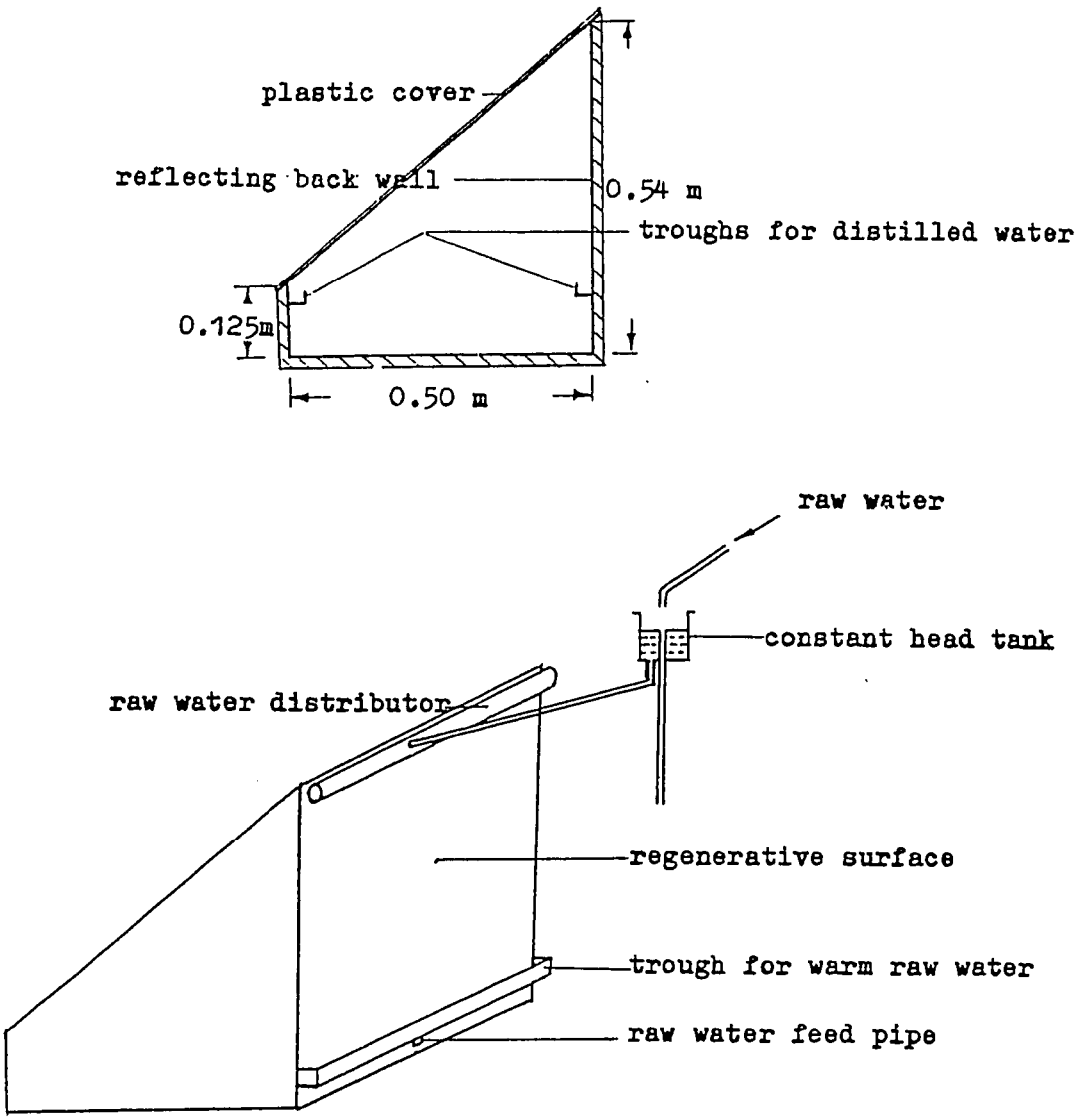

Fig. 7 Plastic-cover solar stills having a reflecting back wall and a regenerative back wall.

Previous Page Blank

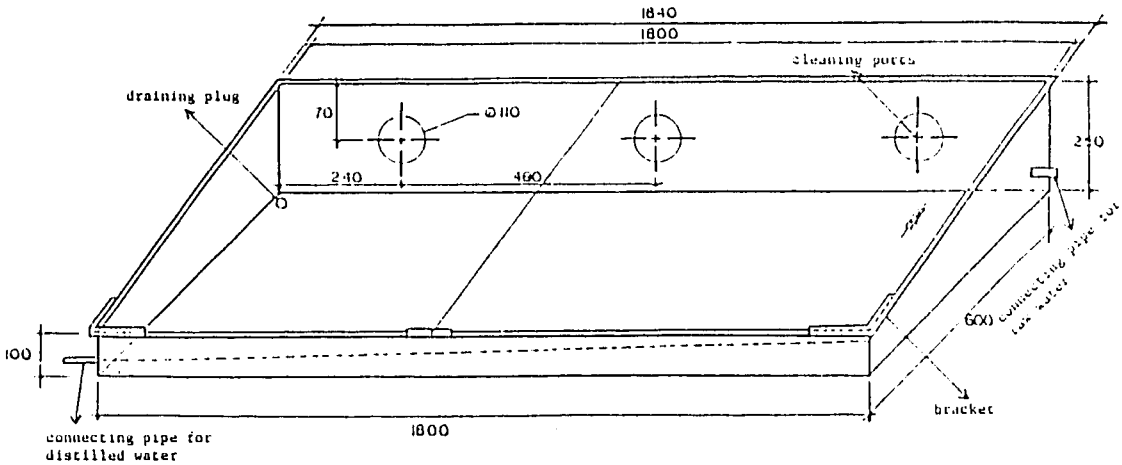

Fig.8 Modular basin-type solar still having fiber reinforced plastic body (Kiatsiriroat and Chantranuluck, 1982)

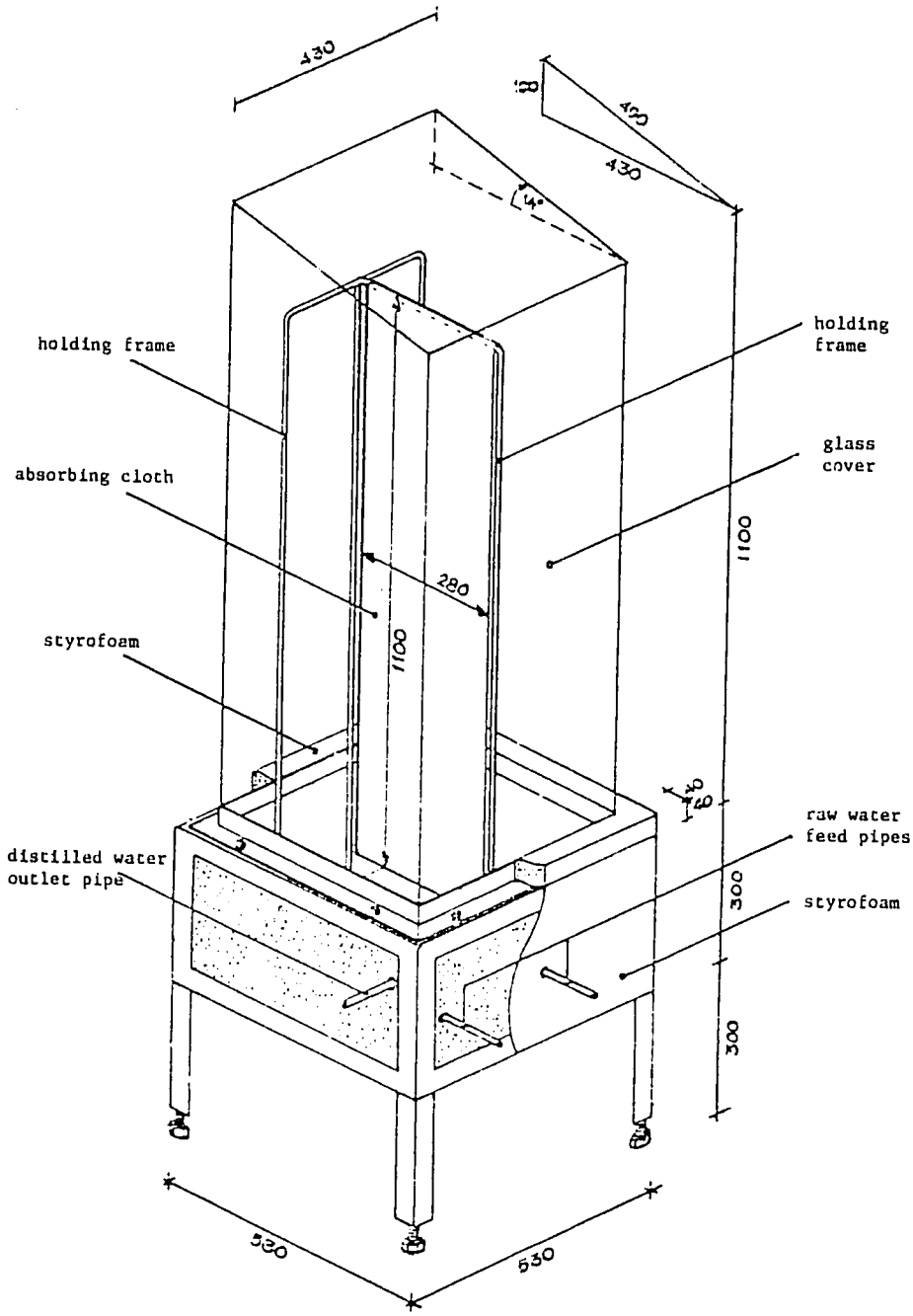

Fig. 9 Solar still model with vertical and flat absorber (Atthasreth, 1984)

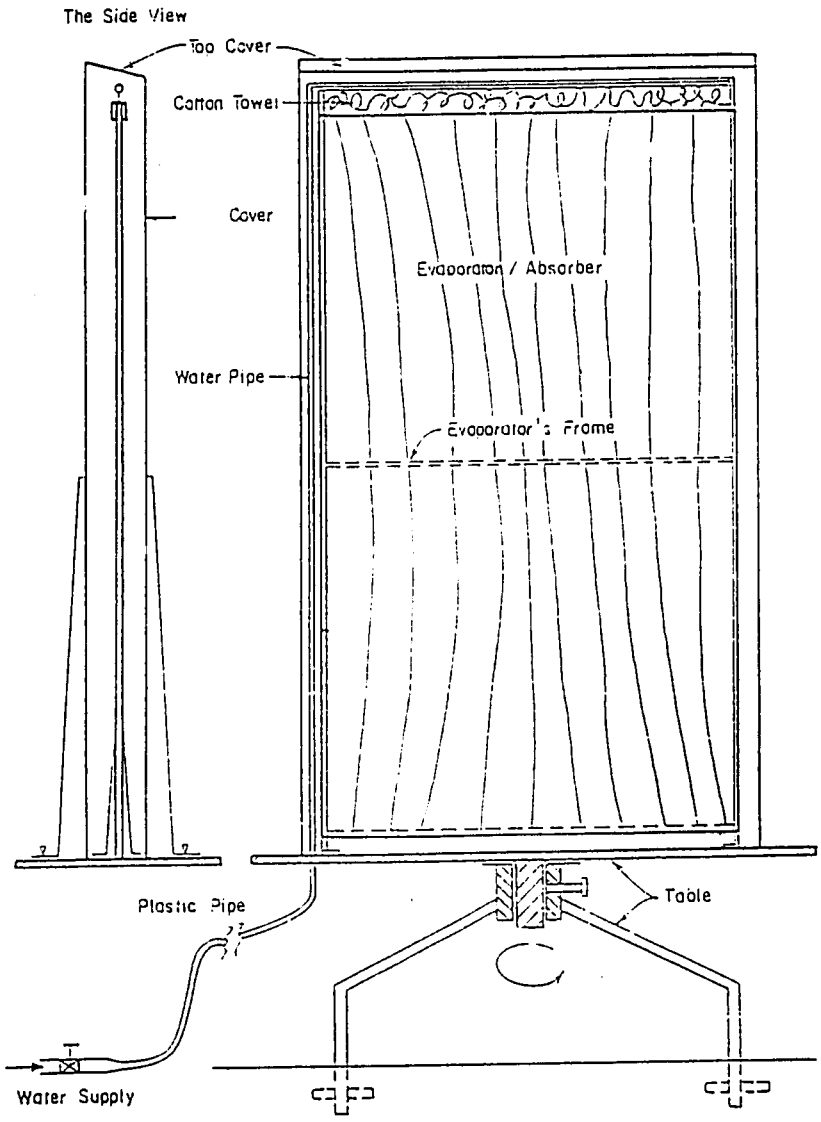

Fig. 10 Diagram of the Vertical Solar Still Prototype

Vertical Surface Solar Still with Two
Glass Covers (Ramli and Wibulswas, 1984).

Previous Page Blank

Chapter 5

Test Procedures

Previous Page Blank

TEST PROCEDURES

A. BASIN-TYPE SOLAR STILL WITH ONE ACRYLIC PLASTIC COVER (Wibulswas and Tadtiam, 1983)

Solar stills described in Chapter 4 were tested according to the following procedures.

Assessment of Two Absorbing Materials

Daily total radiation (measured by pyronometer) and daily distillation rate (recorded by measuring flask) of the plastic-cover solar still having the black butyl rubber sheet as the absorber were recorded for about two months. The same test procedure was repeated for the solar still having the charcoal chips as the absorbing material.

Three Improvement Methods

To assess relative merits of the three improvement methods, daily total radiation and the corresponding daily distillation rates of the solar still incorporated with each improvement method were recorded for about two months.

B. MODULAR BASIN-TYPE SOLAR STILL WITH FIBER-REINFORCED PLASTIC BODIES (Kiatsiriroat and Chantranuluck, 1982)

Once a day, raw water was added into the still until its depth was about 20 mm from the absorbing surface. The daily distillation rate and daily global solar radiation were recorded. Daily tests were conducted for about one month.

After the above tests at KMITT, sixteen units of the modular basin-type solar stills were installed with four units each in order to conduct field tests at the following locations:

1. Buddha Buja Temple, Rasburana, Bangkok
2. Health Center, Lad Sawai, Patumthani
3. Banglamung Hospital, Chonburi
4. Sawangnivas Health Recovery Center, Samutprakarn

Long-term field tests at the above locations lasted up to seven months. There were required in order to assess the public acceptance of the stills for various applications and also to determine possible problems arising from long-term operations.

An improved basin-type solar still with the aluminium inner basin and charcoal chips as the absorbing material was tested for about one month at KMITT. In these tests the distillation rate is approximately the same as those shown in Fig. 13. Twenty additional improved stills were subsequently installed at different locations in the country for long-term field tests.

C. SOLAR STILL MODELS WITH VERTICAL & FLAT ABSORBERS (Atthasreth, 1984)

The solar stills with transparent glass and plastic covers were both tested outdoors at KMITT. To determine daily distillation rates, distilled water was collected from both stills once every 24 hours, usually in the morning. The corresponding daily global radiation was also recorded.

To verify the prediction of the distillation rates based upon the simplified mass transfer theory, tests were conducted for the 2-hour period between 11:30 AM to 1:30 PM during which time the solar radiation was almost constant (see Fig. 18).

Chapter 6

Analysis and Discussion of Results

ANALYSIS AND DISCUSSION OF RESULTS

A. BASIN-TYPE SOLAR STILL WITH ONE ACRYLIC COVER (Wibulswas and Tadiam, 1983)

Assessment of Two Absorbing Materials

Variations of the daily distillation rates for the two absorbing materials plotted against the daily total radiation in Fig. 11 practically merge into the same curve. At the daily total radiation of 16.7 MJ/m^2d, which is the annual average value for Bangkok, the daily distillation rate is about 1.71 l/m^2d. Since the charcoal chips are locally produced and cheap, they seem to be more suitable as the absorbing material than the black butyl rubber sheet which is normally used in developed countries.

Three Improvement Methods

Variations of the daily distillation rates for the three improvement methods plotted against the daily total radiation in Fig. 12 appear to merge into the same curve. At the annual average daily total radiation of 16.7 MJ/m^2d, the daily distillation rate is about 1.93 l/m^2d. Hence, an improvement on the daily distillation rate by about 13% can be achieved by any one of the three improvement methods. The addition of the black cotton cloth on the back wall of the still should be preferable since it is the simplest and cheapest method of improvement.

B. MODULAR BASIN-TYPE SOLAR STILL WITH FIBER-REINFORCED PLASTIC BODIES (Kiatsiriroat and Chantranuluck, 1982)

Variation of the daily distillation rate with the daily global radiation is shown in Fig. 13. The graph indicates that at the annual average daily global radiation of 17 MJ/m^2d, the expected distillation rate is about 1.8 l/m^2d which is slightly lower than that obtained from a basin-type solar still with one transparent glass cover, see Fig. 2.

Distilled water from the still was tested for its physical and chemical properties. Test results which are shown in Fig. 14 confirm that the qualities of the distilled water were above the standard set by WHO (World Health Organization) for drinking water.

Previous Page Blank

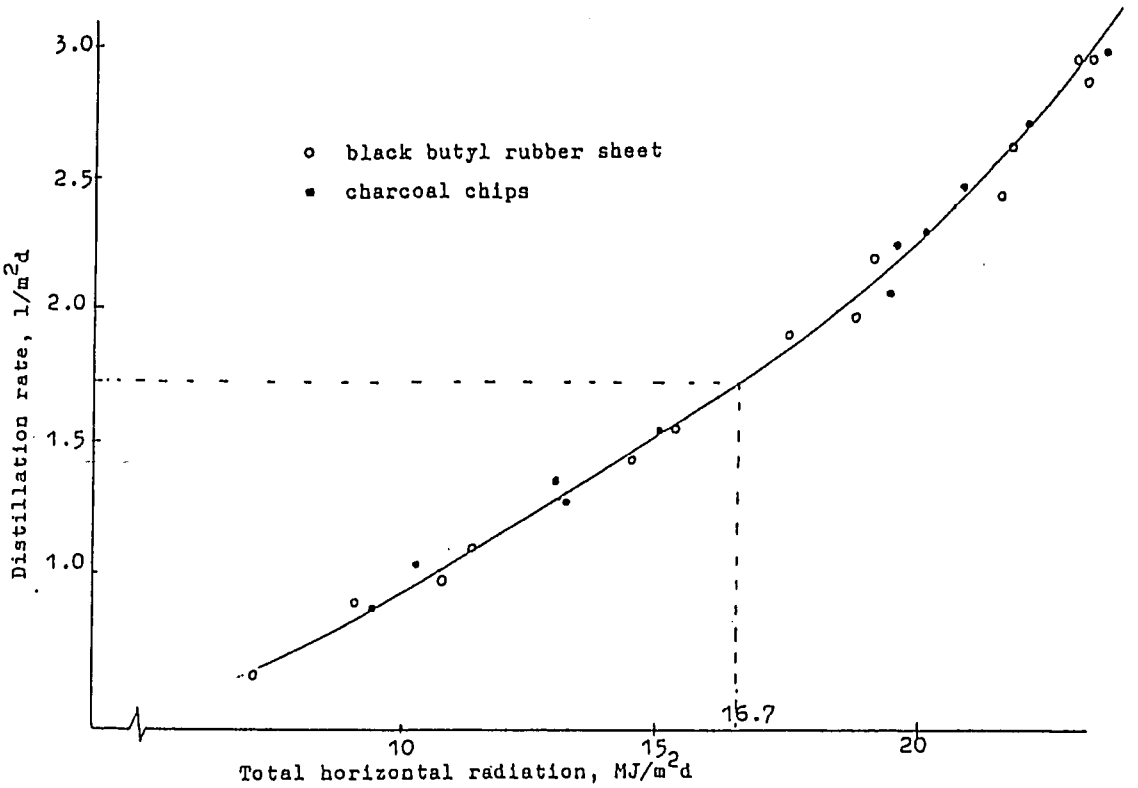

Fig. 11 Comparison between two absorbing materials namely black butyl rubber sheet and charcoal chips.

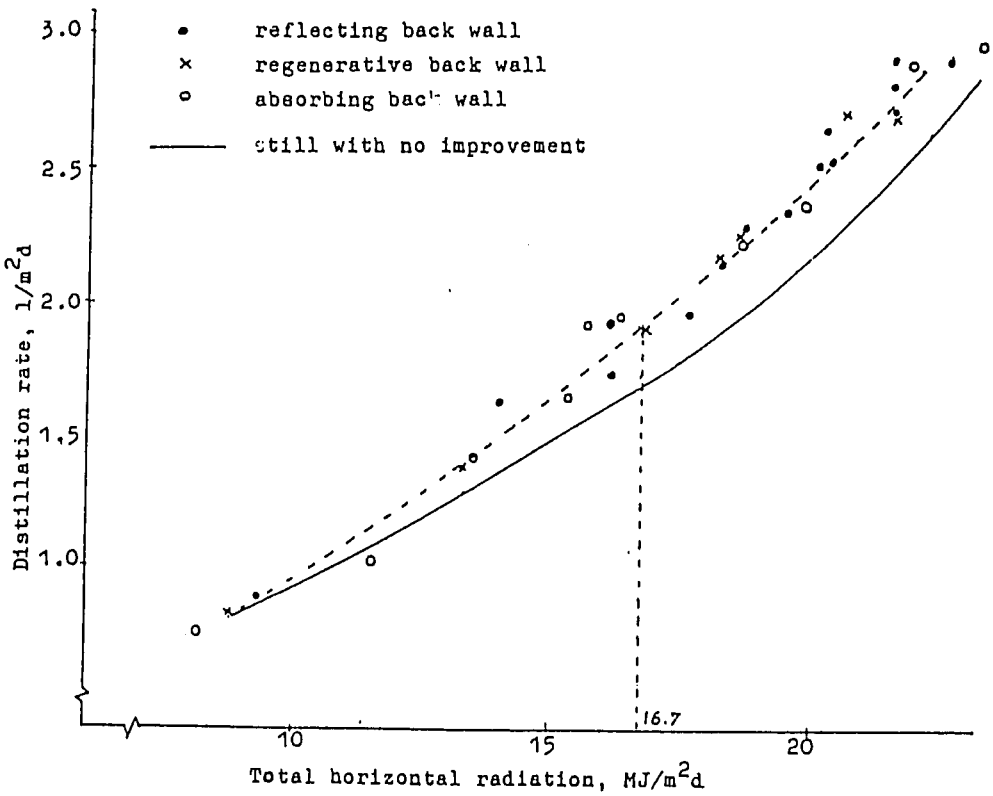

Fig. 12 Comparison of distillation rates obtained from three methods of improvement.

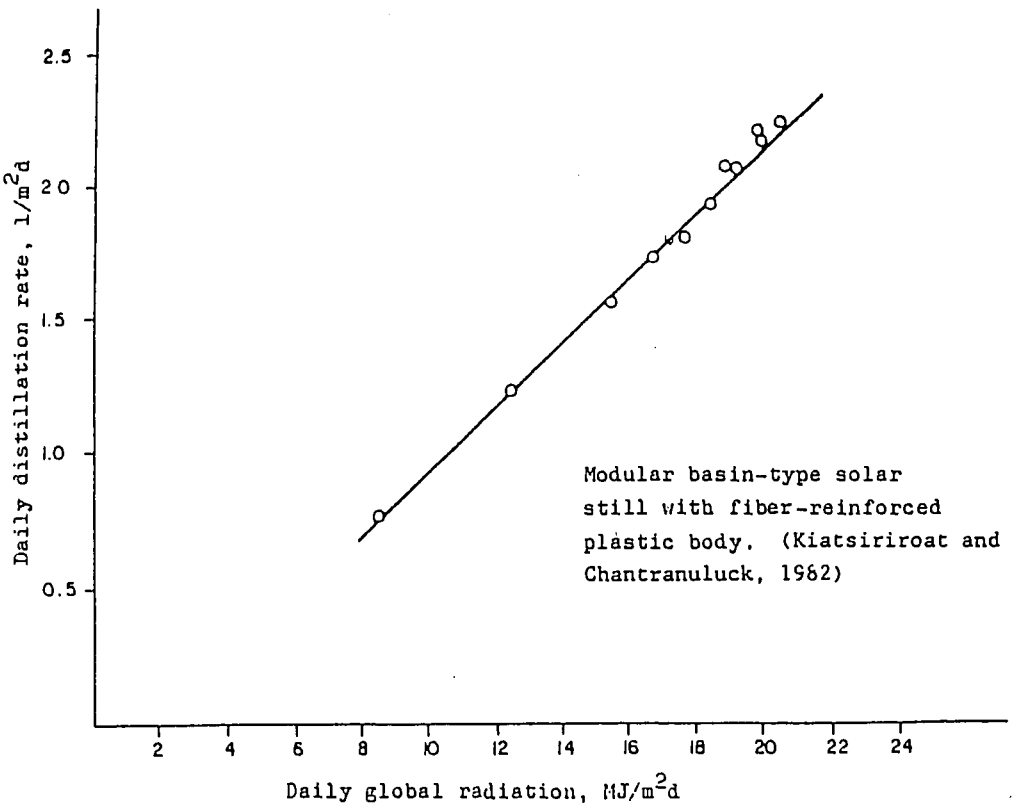

Fig. 13 Variation of daily distillation rate with daily global radiation.

Physical and Chemical Properties	Tested Water		WHO Standard	
	Raw	Distilled	Maximum	Minimum
pH	7.2-10.5	7.2	7.0-8.5	6.5-9.2
color, Pt-Co scale units	5	5	5	50
turbidity, silica scale mg/l	5	5	5	25
total solids mg/l	223	3	500	1500
hardness (as $CaCO_3$) mg/l	130	26	100	500
iron (as Fe) mg/l	0.15	0.1	0.1	0.1
chloride (as Cl) mg/l	195	0	200	600
total plate count at 37°C 24 hrs (colonies/ml)	7.6×10^3	50	less than 2	
coliform bacteria (MPN/100 ml)	12	0		

Fig. 14 Physical and chemical analysis of raw and distilled water from basin-type solar still with fiber-reinforced plastic body. (This was a sample taken soon after the field tests began before the pH dropped to 4-4.5).

Long-term test results (up to seven months) from the sixteen solar stills installed at the four locations in the country, indicated that distilled water was too acidic with pH values varying from 4 to 4.5. Moreover, a strong smell of resin was detected in the distilled water which then appeared to be unfit for drinking.

The short-term test at KMITT on the improved modular basin-type solar still having an aluminium inner-basin yielded better distilled water with a pH value of about 6.5.

C. SOLAR STILL MODELS WITH VERTICAL AND FLAT ABSORBING PLATES (Atthasreth, 1984)

Variations of daily distillation rates with the daily horizontal global radiation are shown in Figs. 15 & 16 for the solar still models with vertical glass and plastic covers facing east-west and north-south, respectively. The still model with the glass cover gave higher distillation rates than the model with the plastic cover by about 10%. At a value of the global radiation above 20 MJ/m^2d, the stills with the covers facing east-west yielded higher distillation rates than those with the covers facing north-south. However, at a value of the global radiation below 20 MJ/m^2d, reversed results were obtained.

It should be remembered that in Fig. 9, the distances between the absorbing plates and the vertical covers of both solar still models were about 200 mm which were much greater than the optimum gap established through mass transfer consideration using electric energy as a heat source (Ramli and Wibulswas, 1984). As a result, the global radiation entering the tops of the covers around noon was more effectively absorbed in the still models when the absorbing plates faced north-south. However, at a high daily global radiation, a greater proportion of the radiation was absorbed in the still models during the morning and afternoon when the absorbing plates faced east-west.

To study the mass transfer process in the still models, a calibration graph between the wet bulb temperature inside an enclosed space against the true wet bulb temperature in an open space was established as shown in Fig. 17.

A comparison between the predicted (see Eqs. 5.5, 6.2, 7.2) and measured distillation rates was shown in Fig. 4 for the solar still model with the absorbing plate facing east-west. Within the range of the horizontal global radiation between 600-900 W/m^2, the predicted values are about 10% higher than the measured rates of distillation. They seem to be reasonably accurate as far as the mass transfer study is concerned.

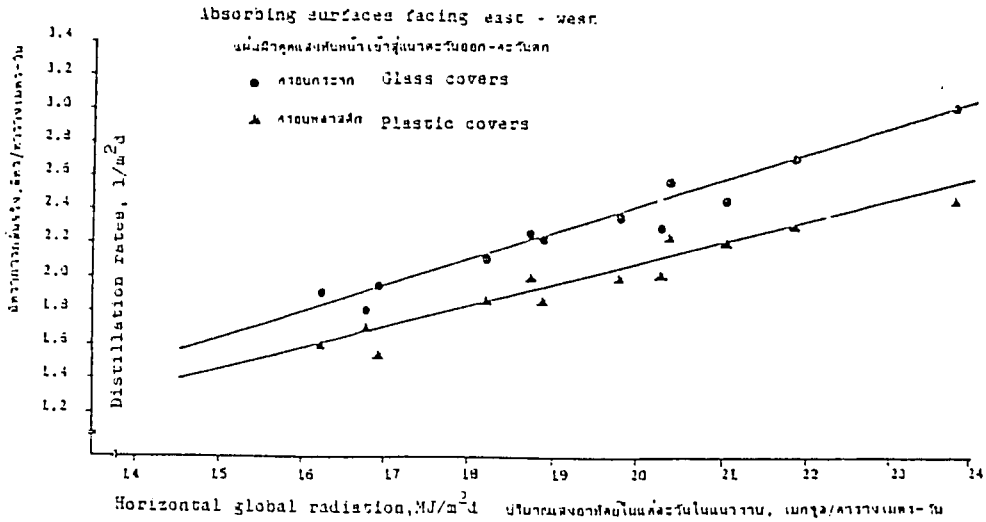

Fig. 15 Variations of daily distillation rates with horizontal global radiation for vertical solar stills with glass and plastic covers facing east - west

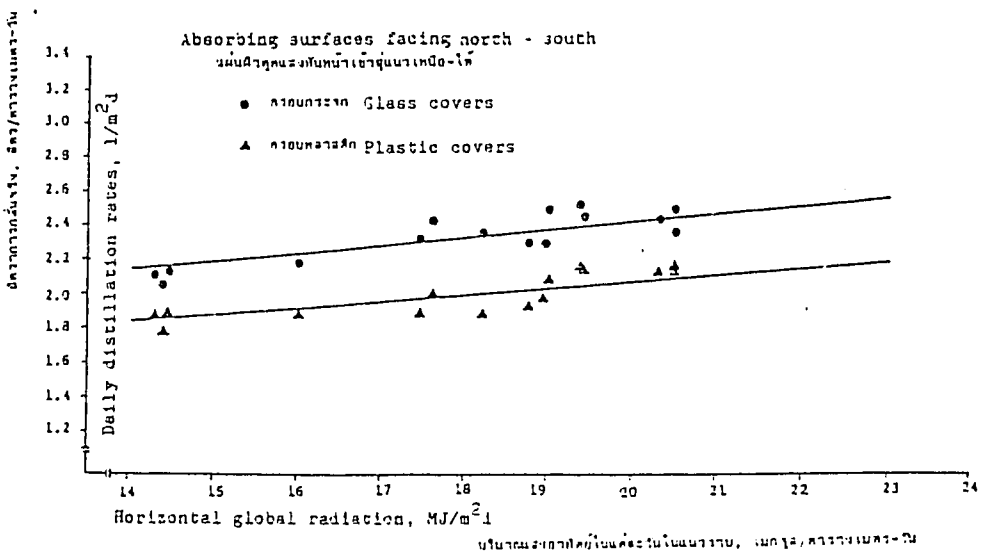

Fig. 16 Variations of daily distillation rates with horizontal global radiation for vertical solar stills with glass and plastic covers facing north - south

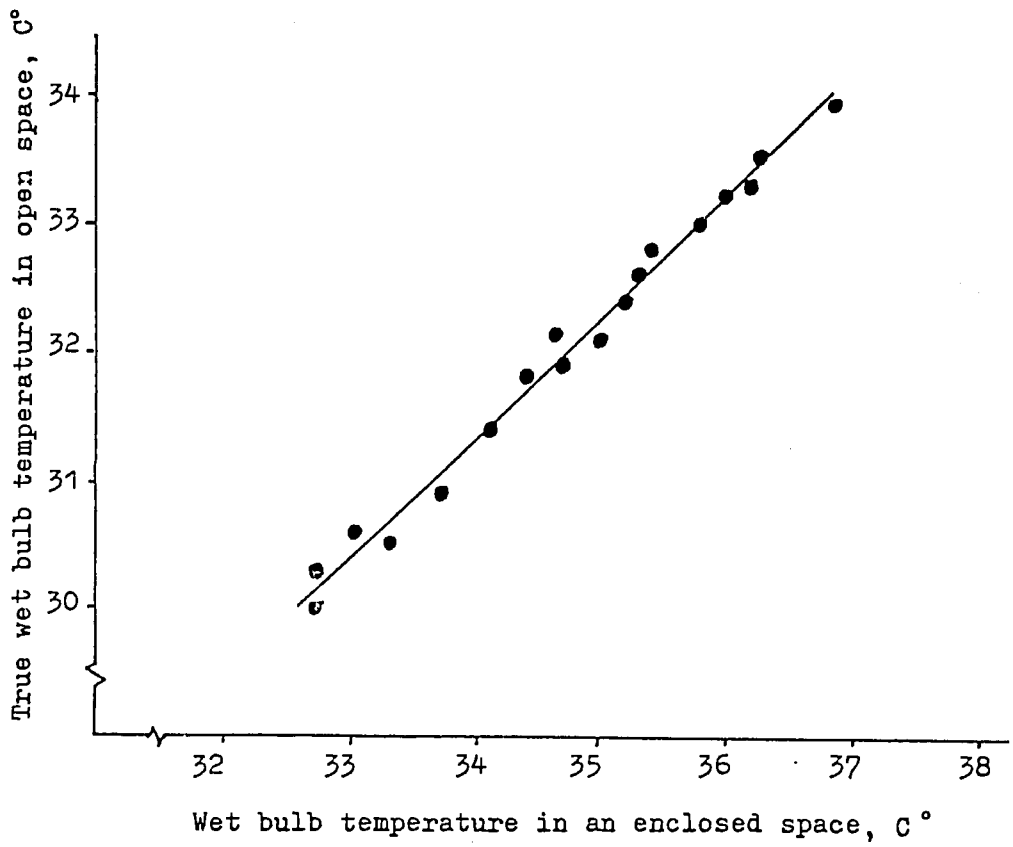

Fig. 17 Calibration graph between the wet bulb temperature in an enclosed space against the true wet bulb temperature in open space, in degrees Celsius.

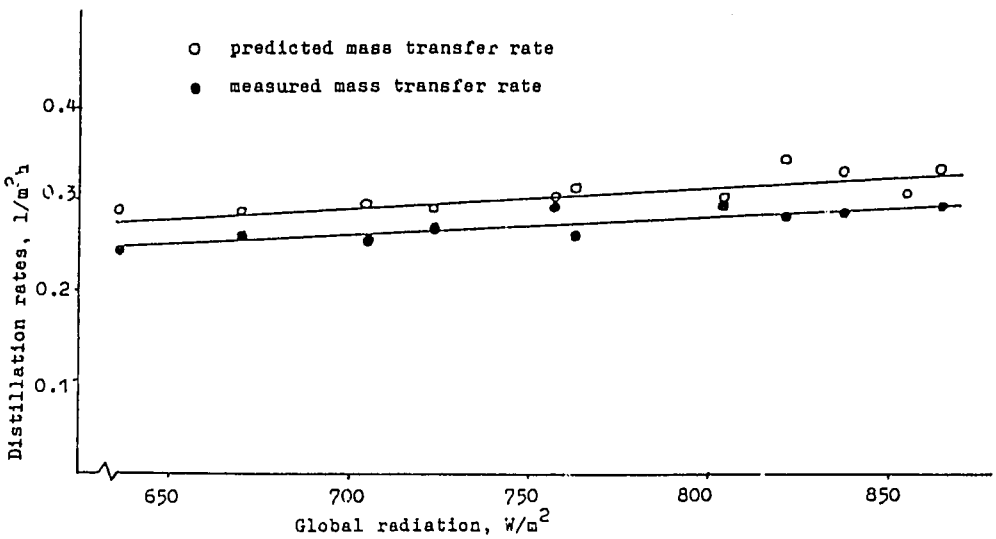

Fig.18 Comparison between predicted and measured mass transfer rates inside the vertical solar still with the absorbing surfaces facing east- west directions.

Chapter 7

Conclusions

Previous Page Blank

CONCLUSIONS

A. BASIN-TYPE SOLAR STILL WITH ONE ACRYLIC PLASTIC COVER

1. The acrylic plastic cover is less prone to be broken by accidents than the glass cover. Resistance to degradation by solar radiation of the plastic cover however, may be less than that of the glass cover.

2. Charcoal chips are preferable as the absorbing material to the black butyl rubber sheet since the former perform equally well, are cheaper and locally produced, and they can also absorb any undesirable smell in raw water.

3. All the three improvement methods on the vertical back wall of the still increased the daily distillation rate by about 13%. Therefore, the addition of the black cotton cloth is preferable since it is the cheapest method.

B. MODULAR BASIN-TYPE SOLAR STILLS WITH FIBER-REINFORCED-PLASTIC

1. After long term tests, distilled water obtained from sixteen modular basin-type solar stills with double-walled fiber-reinforced-plastic bodies was too acidic with pH values of about 4-4.5.

2. When the fiber-reinforced-plastic inner basins were replaced by aluminium ones and charcoal chips were employed as the absorbing material, the quality of distilled water improved considerably with pH values of about 6.5. The water is now suitable for drinking.

C. SOLAR STILL MODELS WITH VERTICAL AND FLAT ABSORBING PLATES

1. The solar still model with the vertical glass covers gave higher distillation rates than those with the plastic covers by about 10%.

2. At a high global radiation above 20 MJ/m^2 d, the still models with the vertical absorbers facing east-west yielded higher distillation rates than those with the absorbers facing north-south. At a radiation below 20 MJ/m^2 d, the reverse results occurred.

3. Distances between the vertical absorbers and covers were much wider than the optimum gap obtained from the mass transfer consideration alone.

Previous Page Blank

Chapter 8

Recommendations

Previous Page Blank

RECOMMENDATIONS

A. BASIN-TYPE SOLAR STILL WITH ONE ACRYLIC PLASTIC COVER

1. Long-term outdoor tests should be conducted on the still to determine the life-times of the acrylic plastic cover and of the cotton cloth on the vertical back wall.

2. An economic and social assessment of the still should be carried out before it is promoted for field applications.

B. MODULAR BASIN-TYPE SOLAR STILLS WITH FIBER-REINFORCED PLASTIC BODIES

1. After long-term field tests, economic and social evaluation of the stills with aluminium inner basins should be attempted by means of large-scale demonstration units.

2. A more suitable resin should be selected as the material for the inner basin in order that distilled water does not become too acidic. Advantages of the true fiber-reinforced plastic basin can then be achieved.

C. SOLAR STILLS MODELS WITH VERTICAL & FLAT ABSORBERS

1. Taking the effects of mass transfer and global radiation into account, true optimum gaps between the vertical absorbing plates and covers should be determined for east-west and north-south orientations.

2. Transient phenomena inside the vertical solar still should be studied so that the still performance can be accurately predicted.

3. Long-term outdoor tests should be conducted on large vertical-surface solar stills with acrylic covers facing north-south and east-west directions so that their technical and economic performance can be assessed.

D. MASS TRANSFER THEORY

The prediction of the distillation rate by means of the convective mass transfer theory in this work still requires the values of the wet and dry bulb and interface temperatures inside the solar still. The theory should be further developed so that the measurement of these temperatures will not be needed for the prediction.

REFERENCES

Atthasreth T., "Vertical Solar Still Models", Master degree thesis, Energy Technology Programme, KMITT, Bangkok, 1984.

Bayley, Owen & Turner, *Heat Transfer*, Nelson, London, 1972.

Biological and Physical Sciences, Sukothai University Press, Bangkok, 1982, p.48.

Coffey J.P., "Vertical Solar Distillation", *Solar Energy*, Vol. 17, 1975, pp. 375-378.

Cooper, P.I, R & D Pregress Report No. 190, The Office of Saline Water, Battelle Memorial Institute, May, 1966.

_____"Digital Simulation of Transient Solar Still Processes", *Solar Energy*, 12(3), 1969, pp. 313-331.

Gong-prasert T., "Thailand and Solar Energy", *Economic Journal*, 12(6), June, 1980, pp. 180-181.

Kays, W.M. & Crawford M.E., *Convective Heat and Mass Transfer*, McGraw-Hill, New York, 1980.

Kiatsiriroat T. & Chantranuluck S. "Uses of Fibre-Reinforced Plastic in Solar Collectors", KMITT R & D Bulletin, Vol 5, No. 2, December, Bangkok, 1982, pp. 75-83.

Malik M.A.S., et al., *Solar Distillation*, Pergamon Press, Oxford, 1982, p.4.

Maung Nay Htun & Aftab M.P., "A Study of the Efficiencies of Various Designs of Solar Stills, *J. Sci. Soc. Thailand*, Vol.2, March, 1976.

Ramli M. & Wibulswas P., "Solar Stills With Vertical Absorbing Surfaces", Regional Seminar on Simulation and Design in Solar Energy Applications, UNESCO-KMITT-USAID, Bangkok, May, 1984.

Spalding, D.B., *Convective Mass Transfer*, Arnold, London, 1963.

Uppalanond, K., "A Double-Sloped Solar Still", MEng, Dept. of Mechnical Eng., KMITT, Bangkok, 1979.

Wibulswas P., "Economics of Solar Stills", *Journal of Technological Promotion Association*, Bangkok, July, 1977.

_____et al., "Development of Solar Stills Having Acrylic Plastic Covers in Thailand", *Alternative Energy Sources IV*, Ann Arbor Science, Michigan, 1982, pp. 385-393.

_____and Pothihom A., "Economic Analyses of Solar Water Heater and Solar Stills in Thailand", Solar Energy: International Progress, Pergamon Press, Oxford, 1980.

_____and Tadtiam S., "Improvement of a Basin-type Solar Still by Means of a Vertical Back Wall", Int. Symposium Workshop on Renewable Energy Sources-Lahore, Elvier, Amsterdam, 1984.

PART II

SOLAR REFRIGERATION

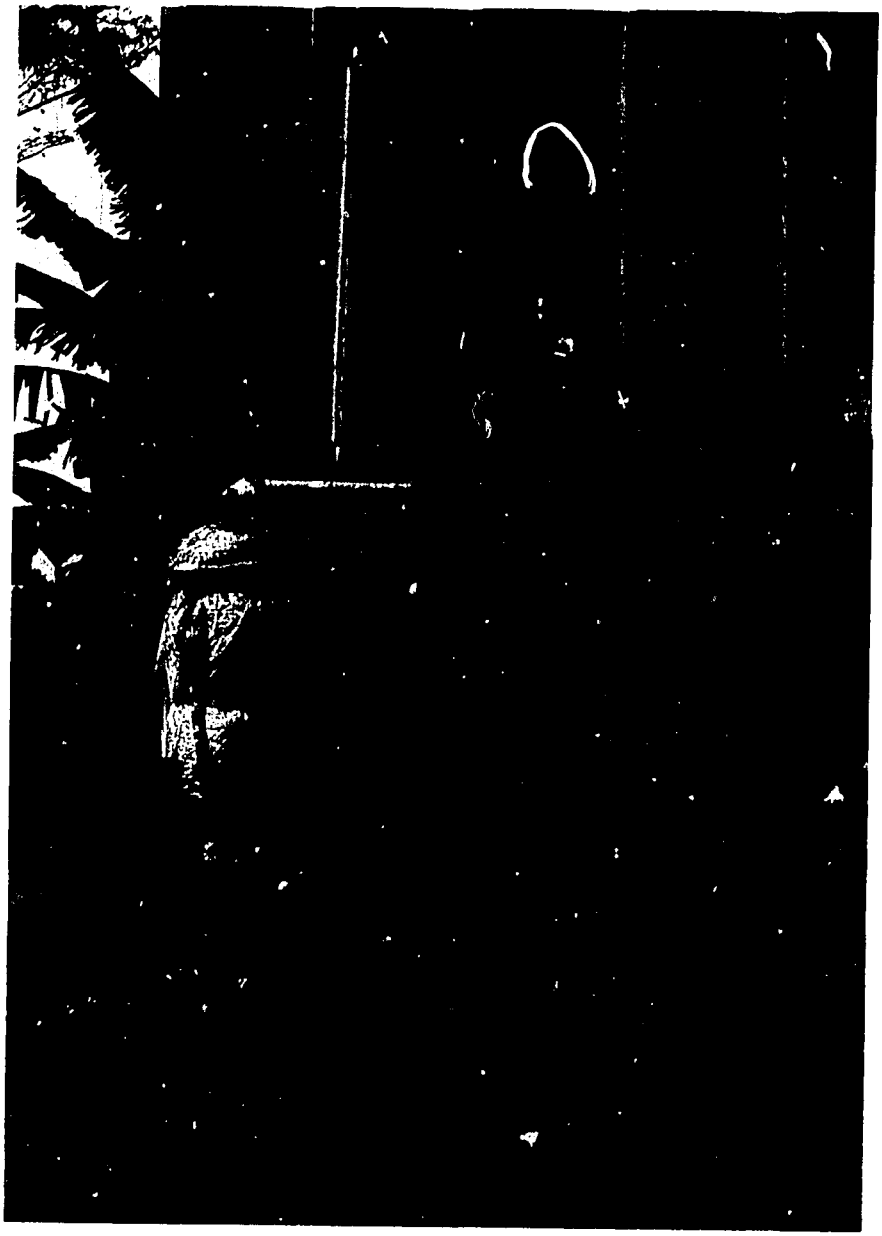

Solar Refrigerator

ACKNOWLEDGEMENTS

The authors wish to acknowledge the financial assistance provided by USAID. We are grateful for the contribution made through many discussions with the staff of Faculty of Engineering and School of Energy and Materials, KMITT, and of particularly, Dr. Somchart Sophonronarit. We also wish to acknowledge the contributions of Mr. Utis Teravaninthorn and Mr. Pairote Kiriratana who have provided technical assistance.

Dr. Sakarindr Bhumiratana
Associate Professor, KMITT
Dr. Wittaya Teppaitoon
Lecturer, KMITT

Preceding Page Blank

EXECUTIVE SUMMARY

The purpose of this research project was to design, construct, and test on ice-maker suitable for use in rural communities. After approval, the project commenced in October 1982.

An ice-maker having the capabilities to produce 15 kg of ice per day was designed as a test-model. An ammonia-water absorption system was selected. Being a test model, the design stressed flexibility of operational modes. The generator consists of a shell and tubes and uses as a heat source any hot fluid (from a biomass burner, a system of collectors, or any other source.) The condenser and absorber are submerged in a large pool of water. The transfer of aqua-ammonia between the generator and absorber is aided by gravity and inherent pressure, with a pump that can be incorporated to convert the system into a continuous unit. The vaporator is a flood-type and is designed to produce ice or to act as a cooler.

The construction of the test model was completed in April 1983. After several trial runs (with the generator temperature below 100 C in an intermittent mode), the system successfully produced 15 kg of ice in July 1983. Modifications on the heat delivered system and evaporators were made enabling subsequent tests to show operational improvement.

Based on the results of the test model, a second ice-maker producing 15 kg of ice per day has been designed with emphasis on ease of operation. A liquid-check valve is incorporated in this model. The unit was completed in May 1984 and will undergo test runs until December 1984.

Modifications and test runs on both units are expected to be carried out on a continuous basis for further improvement. It is expected, however, that a workable unit to be located at site will be available by December 1984.

CONCLUSIONS

1. The successful test run of the model unit brought about the confidence to try several modifications of the model, and experimental studies are being carried out continuously. The results obtained will be reported appropriately at the end of each specific study. Meanwhile, the prototype unit is being built; it is expected to be completed in December 1984.

2. Within a few years, the research team should be able to develop further the technological process of ice making by solar energy in the rural village. Technically, ice has been made; however, the economic and social aspects will have to be evaluated after further technological improvements.

3. The research program has served to create additional research activities within KMITT, and has resulted in an extensive training program for individuals involved in solar refrigeration research.

Previous Page Blank

LIST OF TABLES

Table	*Title*	*page*
1.	Temperature Pressure Volume of Solution of Test No. 4 (2nd Run)	134
2.	Concentration vs Time (Test No. 4, Run 2)	135

Previous Page Blank

LIST OF FIGURES

Figure	*Title*	*page*
1.	Block Diagram of Simple Intermittent Absorption Cycle	96
2.	Block Diagram of Continuous Absorption Cycle	97
3.	Thermodynamic Diagram of Ammonia-Water Solution	99
4.	Schematic Diagram of Solar Refrigerator by Chinnappa	104
5.	Schematic Diagram of Solar Refrigerator by Swartman and Swaminathan	105
6.	The First AIT Solar Refrigerator	107
7.	Block Diagram of Small Prototype Refrigerator	108
8.	Schematic Diagram of the Two Solar Refrigerator Models Developed at AIT	109
9.	Schematic Diagram of the New Solar Refrigerator Model Developed at AIT	111
10.	P-T-X Diagram for Design Condition	117
11.	Structure of Generator	119
12.	Top View of Fabricated Condenser	120
13.	The Fin Tube Used in the First and Third Part of Condenser	120
14.	Structure and Dimension of Evaporator Coil	122
15.	Absorber	123
16.	Dimension and Structure of Cooling Water Tank	124
17.	The Temperature Measuring Points in the Generation Process	128
18.	The Schematic of the System	129
19.	The Perspective View of Installed Plant	130
20.	The Variation of Temperature in the System with Time	136
21.	The Variation of Solution Concentration with Time	137
22.	The Cycle of Solution in the Generator and Absorber Based on T_3	138

Previous Page Blank

Chapter 1

Introduction

Previous Page Blank

INTRODUCTION

A. HISTORICAL BACKGROUND

The ability to produce ice at a rural village will obviously improve the existing standard of living of a rural community since medicine can then be stored, food and produce preserved, etc. Technologies do exist for producing ice by utilizing only solar heat and an ambient sink through the use of the intermittent absorption system. Unfortunately, this method is uneconomical when compared with systems based on other sources of energy. However, the comparison can not be used to judge the rural situation due to lack of conventional energy sources there.

Most of the basic research on solar refrigeration took place in the 1950's and was reported on at the United Nations' Conference on New Sources of Energy in Rome in 1961 (United Nations, 1961). Only since the "energy crisis" has the research been actively resumed. Based on this research, it is safe to conclude that the only technologies available at present, suitable or economical for application to the rural areas in developing countries, are evaporative cooling and intermittent absorption cooling. All other refrigeration processes are either too complicated or too costly to be considered. Evaporative cooling for ice-making is clearly not suitable for Thailand due to high humidity over a substantial part of the year.

B. OBJECTIVES

The main purpose of this research project is to devise the engineering design, then construct and test an ice-maker for use in rural communities. Initial library research led to an ammonia-water absorption system. The previous research efforts on ice-makers for rural use are reviewed. An analysis based on the irreversibility of the absorption refrigeration system shows that the losses are substantial due to finite temperature differences and pressure decreases in various components of this system. Hence, an unconventional design was selected and attempts were made to improve the system's performance by a more careful design of its main components. The details are given in the subsequent sections of this report.

The working objectives were twofold:

1. To develop and test a model of solar ice-maker able to produce 15 kg of ice per day. Since flexibility was stressed, several component options were tested on the model.

2. To develop a simple-to-operate solar refrigeration prototype having the capability to produce 15 kg of ice per day.

Previous Page Blank

Chapter 2

Theory

Previous Page Blank

THEORY

A. PRINCIPLES UNDERLYING OPERATION

The gas absorption-desorption cycle refrigeration systems are, in principle, very simple machines. The cooling effect is achieved by the working of two fluids, the refrigerant and the absorbent. The systems can be broadly classified as intermittent and continuous systems. The working principle can be easily explained by taking the intermittent system as an example. The schematic of Figure 1 shows the working principle of the simplest intermittent cycle, e.g. the domestic portable food refrigeration such as the American "Icy Ball" or the French "La Frigor". Both use ammonia as the refrigerant and aqua-ammonia solution as the absorbent. The system is composed of two closed connected vessels, each serving a dual function. During generation, (solar) heat is supplied to vessel A, containing the refrigerant-absorbent solution, to vaporize the ammonia refrigerant. The ammonia vapor is condensed in vessel B, the condenser. During the condensation, heat is dissipated to the surrounding air or cooling water. During this period the vessels A and B act as the generator and the condenser, respectively. For the refrigeration period, liquid ammonia from vessel B is vaporized by absorbing heat from the surrounding air or water. The vapor is subsequently absorbed by the solution in vessel A. During this period vessel A and B act interchangeably as absorber and evaporator respectively.

The continuous absorption cycle has four components as shown in Figure 2. Each serves as a single function--the absorber, the evaporator, the condenser, and the generator. To complete the cycle, the working fluid must be circulated from the low pressure side (evaporator and absorber) to the high pressure side (generator and condenser). A pump must be used or a third working fluid such as hydrogen gas must be added to aid in transferring of fluid.

Some of the disadvantages of the ammonia-water absorption system include:

(1) An ammonia-water system normally operates at fairly high pressure,

(2) a portion of the absorbent vaporizes along with ammonia when generated, and

(3) there are a number of difficulties with the thermo-circulation system not reported in the literature.

In order to eliminate some of these disadvantages, other systems have been proposed and some have been tested. They include aqueous salt-ammonia, aqueous lithium salt-water, and solid absorbents such as lithium thiocyanate, lithium and ammonium nitrate, and alkali halides.

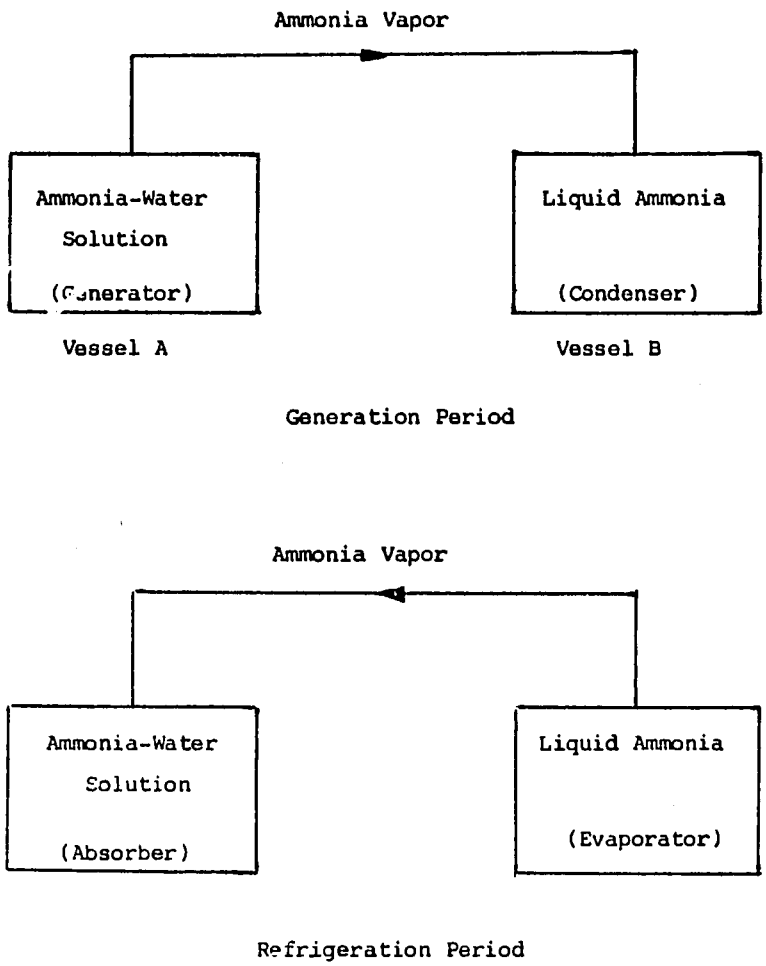

Fig. 1 Block Diagram of Simple Intermittent Absorption Cycle

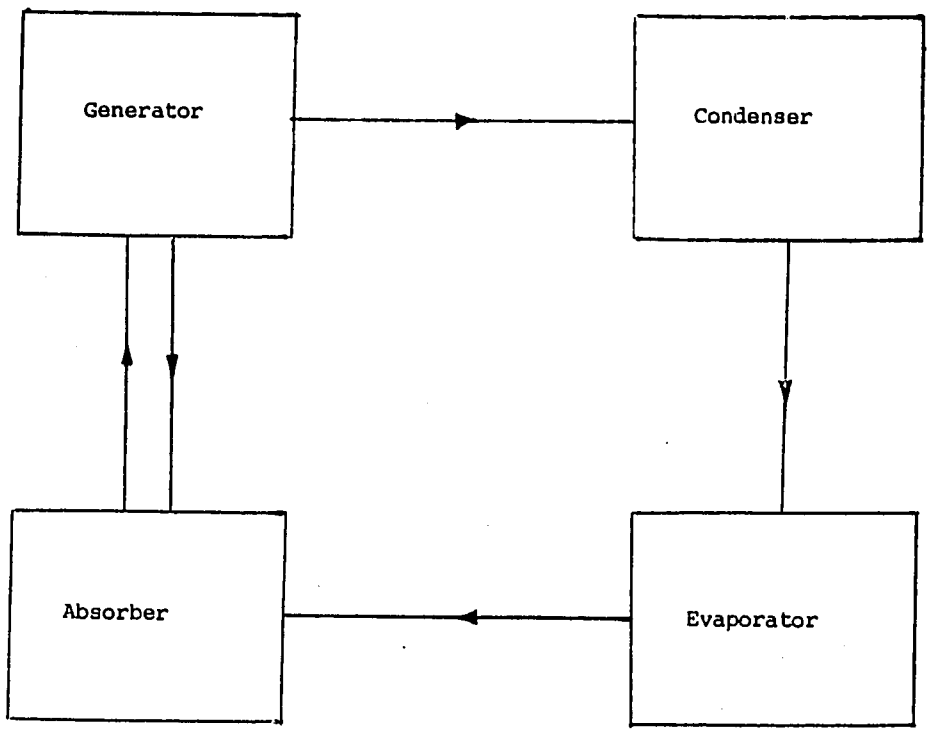

Fig. 2 Block Diagram of Continuous Absorption Cycle

B. THERMODYNAMIC CONSIDERATIONS

Thermodynamic change for ammonia solution can be explained with the aid of Figure 3, as follows:

1. C to D; the heating process. The solution is heated at constant concentration until it begins to boil at point D. Pressure increases in response to the increase in temperature.

D to A; the boiling precess. The solution starts to boil and ammonia vapor condenses in the condenser. The process occurs at a constant pressure due to a constant condenser temperature. The ammonia solution concentration decreases from point D to point A, while boiling temperature increases to the maximum value at point A.

3. A to B; the cooling process. The solution is allowed to cool at constant concentration until the temperature reaches point B. The pressure correspondingly decreases.

4. B to C; the absorption process. Ammonia vapor evaporated from the evaporator is absorbed by the solution at constant absorbing temperature. The solution concentration increases from the value corresponding to point B to that of point C. During the absorption process heat must be removed from the absorber to maintain the absorbing temperature. As the solution concentration increases, the evaporating temperature increases until point C, which is the maximum allowable temperature, is reached.

The absorption process can alternately take place at constant pressure as represented by line B to C but such a process would be difficult to control.

During the boiling process, to avoid water carrying over into the condenser due to its high volatility, a rectifier is usually connected between the generator and condenser to minimize water vapor condensing in the condenser. Even small amounts of water in the condenser can substantially diminish the cooling ability of the ammonia refrigerant.

The quantities of heat transferred to and from the solution during the different processes can be calculated from the enthalpies of the solution and the vapor as follows. The differential of heat Q transferred to a thermodynamic system with volume V and pressure P is given by

$$Q = dH - VdP \qquad \text{---- (1)}$$

where H is the enthalpy of the system

In the process that occurs in this cycle, the VdP term is less than 0.5% of the dH term. Consequently, it may be neglected and the differences in the enthalpy may be used to represent the heat transfer.

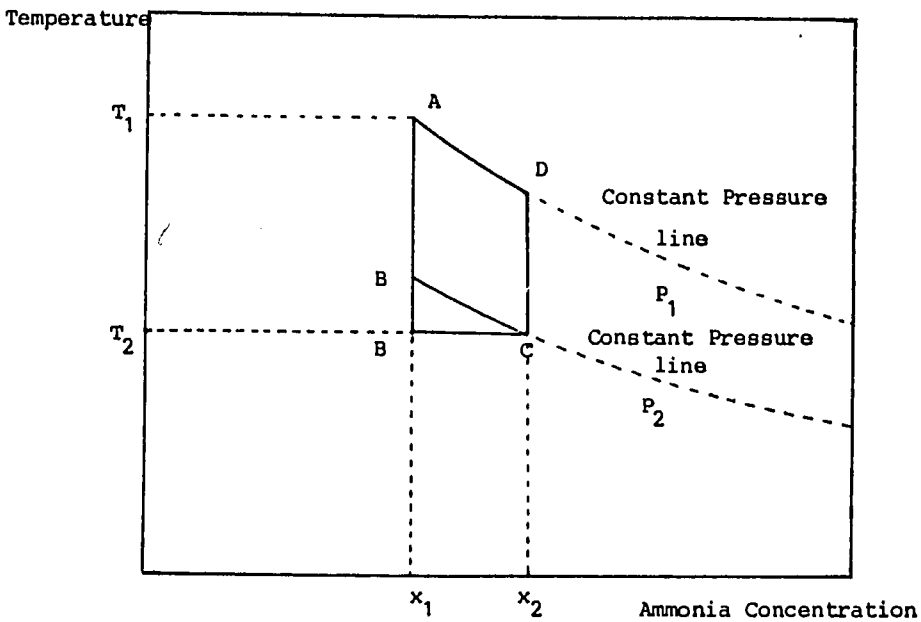

CD	heating process at constant concentration
DA	boiling process at constant pressure
AB	cooling process at constant concentration
BC	absorption process at constant temperature
B'C	absorption process at constant pressure

Fig. 3 Thermodynamic Diagram of Ammonia-Water Solution

$$Q = dH \quad \text{---- (2)}$$

Let m_L and m_V denote the mass of liquid solution and vapor, respectively; and h_L and h_V denote the corresponding specific enthalpy. Then the total enthalpy of the system will be:

$$H = M_L h_L + m_V h_V \quad \text{---- (3)}$$

$$dH = d(m_L h_L) + d(m_V h_V) \quad \text{---- (4)}$$

$$= d(m_L h_L) + m_V d h_V + h_V dm_V \quad \text{---- (5)}$$

For the intermittent cycle, one can argue that the $m_V dh_V$ term in equation (5) is negligible for the purpose of calculating the heat transfer in vessel A. After omitting this term and integrating from an initial state i to a final state f one obtains the enthalpy change of the system in vessel A during any process.

$$H = (m_L h_L)_f - (m_L h_L)_i + \int_i^f h_V dm_V \quad \text{---- (6)}$$

For most practical purposes the integral may be approximated as:

$$\int_i^f h_V dm_V = \tfrac{1}{2} (h_{Vi} + h_{Vf}) (m_{Vf} - m_{Vi}) \quad \text{---- (7)}$$

For vessel B the amount of heat transferred during the condensation and evaporation process can be calculated from the equation (2) which is the enthalpy change of state of pure ammonia at the specified condition.

Coefficient of Performance (C.O.P.)

For a batch process as in the case of intermittent cycle, C.O.P. can be define as:

$$\text{C.O.P.} = \frac{\text{Quantities of heat transferred in evaporator during refrigeration}}{\text{Quantities of heat used to generate ammonia vapor during generation}}$$

The C.O.P. of this process is fairly low in comparison with the C.O.P. of a continuous process since the heat of the solution is wasted upon cooling.

Chapter 3

Review of Literature

Previous Page Blank

REVIEW OF LITERATURE

A. SOLAR REFRIGERATION ELSEWHERE

In 1964, Trombe and Foex constructed solar ammonia absorption refrigeration operated intermittent y. The solution was allowed to flow from a cold reservoir through a pipe placed at the focal line of a cylindroparabolic reflector of aluminum-magnesium alloy. The system has a very low heat capacity since only a small part of the solution was heated. Two prototypes producing 6 and 100 kg of ice per day had been developed. The requirement of concentrating collectors made the system too expensive to build and too complicated to operate. (Trombe and Foex, 1964)

In 1962, Chinnappa built a simple solar powered intermittent ammonia-water absorption unit using flat plate collectors. The schematic diagram of the unit is shown in Figure 4. Each component worked independently. The collector area was 1.5 sqm, made of copper sheet soldered on steel pipes. Nine kg of 46% (by wt) ammonia solution was charged and 1.2 kg of pure ammonia was produced on a clear day. (Chinnappa, 1962)

Swartman and Swaminathan (1971) developed further the system built by Chinnappa. They combined the boiler, the collector, and solution reservoir into a single unit. The combined unit acted as the collector-generator system, using a large header pipe to contain the solution as shown in Figure 5. In a similar fashion, the condenser and the evaporator were combined into a single unit, a condenser-evaporator unit. During refrigeration period an absorption process took place in the collector and heat of absorption could be released by opening the glass cover. Thus the collector acted both as a generator and an absorber. About 1.9 kg of ammonia per square meter of collector was distilled. However, the refrigeration process was too slow because of ineffective absorption of ammonia vapor into the solution. This problem was later solved by proper design to aid the circulation of the solution within the collector.

Moore and Farber (1967) studied the effect of varying the center to center tube spacing, the tube diameter, and the backing sheet thickness.

Farber (1970) built a continuous ammonia-water absorption refrigerator with electrical pump. The system was able to produce 12.5 kg of ice per square meter of collector per day.

Many investigators tried to use another absorbent instead of water such as aqueous sodium chloride or aqueous sodium thiocyanate. These combinations could eliminate water vapor which could be carried over during generation into the condenser-evaporator unit and would decrease the performance of the evaporator during evaporation. However, a serious problem was the corrosion of material and the lack of thermodynamic data. The use of a solid absorbent for ammonia in a solar powered refrigerator had been studied by Worsoe-Schmidt. The absorbent was a porous solid made of Portland cement and calcium chloride. It seem to work well during a shrot-term test but for a

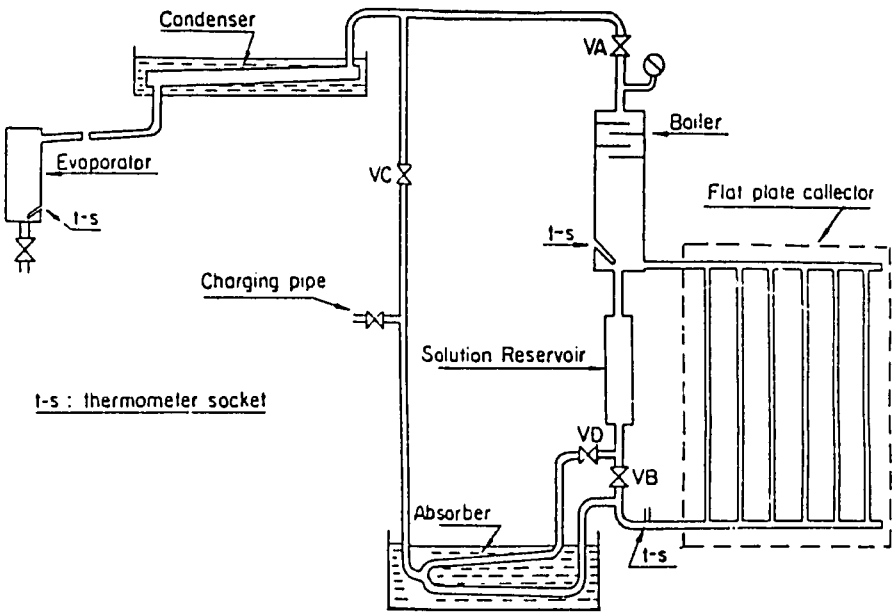

Fig. 4 Schematic Diagram of Solar Refrigerator by Chinnappa (3)

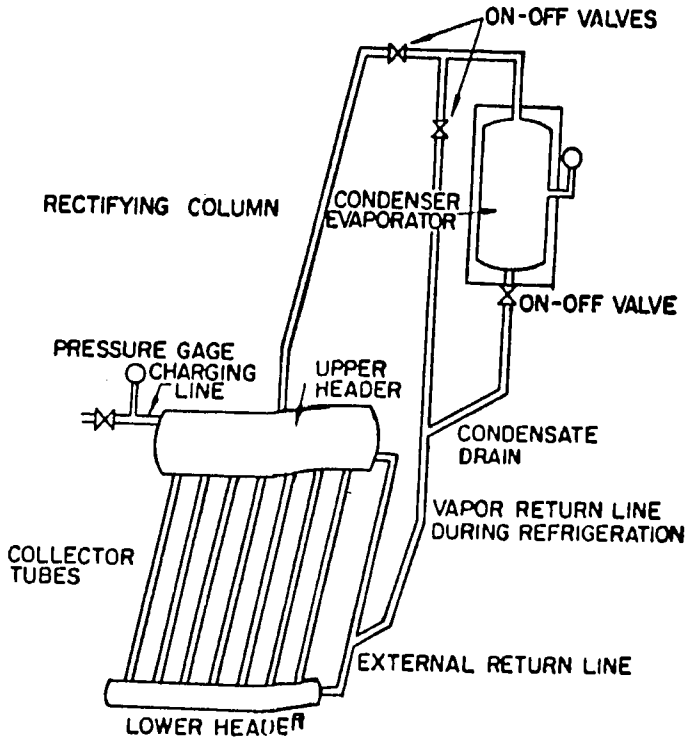

Fig 5. Schematic Diagram of Solar Refrigerator by Swartman and Swaminatham.

long run period the absorbent did not function effectively. Another problem encountered was that the system had a low heat transfer coefficient, thus requiring a large generator-absorber. (Worsoe-Schmidt, 1978)

B. SOLAR REFRIGERATION IN THAILAND

The first extensive study of solar-powered refrigeration in Thailand has been that of the researchers at the Asian Institute of Technology led by Professor Exell. In 1974 Kornskoo built a small ammonia-water intermittent absorption refrigeration unit for rural areas. The system is similar to a simple "Icy Ball" except that a generator-absorber unit also acted as a solar collector as shown in Fig. 6. The collector was a flat plate type with an area of 1.44 sqm containing 15 kg of 46% (by weight) ammonia solution. On a clear day about 0.9 kg of pure ammonia was obtained in the condenser which was surrounded by stagnant cooling water. During the refrigeration process the collector glass cover was opened to dissipate the heat of absorption.

Jarimopas (1976) modified the previous unit by connecting a new component acting only as an evaporator. Refrigeration was produced in a dry type evaporator operated by a hand expansion valve (valve B in Fig. 7) instead of a flood type as in the previous unit. This modification produced a cooling effect because of the separated function of the condenser and evaporator. On a bright day 1.59 kg of ice was produced.

Soponronnarit (1977) made further developments which were able to produce 6.4kg of ice. The improvement was the use of a flat mirror which could be adjusted at an angle east-west of the collector to increase solar radiation.

Exell and Kornsakoo (1981) developed two new models, Model I and Model II (Fig. 8). The collectors of these two models were a slightly different, ordinary flat plate collector for Model I and a semi-circular reflector below the riser fin for Model II. Each model consisted of two 2.5 square meter collectors with four flat mirrors perpendicular to the collector. The mirrors were mounted on the eastern and western edges of each collector and could be adjusted manually to obtain maximum energy input. Since Model II had half risers of Model I, the collector heat capacity of Model II was less than Model I. For the same amount of ammonia solution a reservoir containing extra solution might be added to Model II. During night refrigeration, heat of absorption was dissipated by opening the slot in the collector casing to allow fresh air to flow between the glass cover and plate. The insulation at the top header was also opened. However, the rate of heat dissipation was insufficient and dust would contaminate the absorbing surface.

The test results showed that the amount of pure ammonia distilled in Model II was less than that of Model I. This was due to the fact that the mirrors of Model II were made of stainless steel, while Model I's mirrors were made of silvered glass. However, when the mirrors were not used, the results were the same. With the help of mirrors, the expected production of ice from Model I was 24 kg per day.

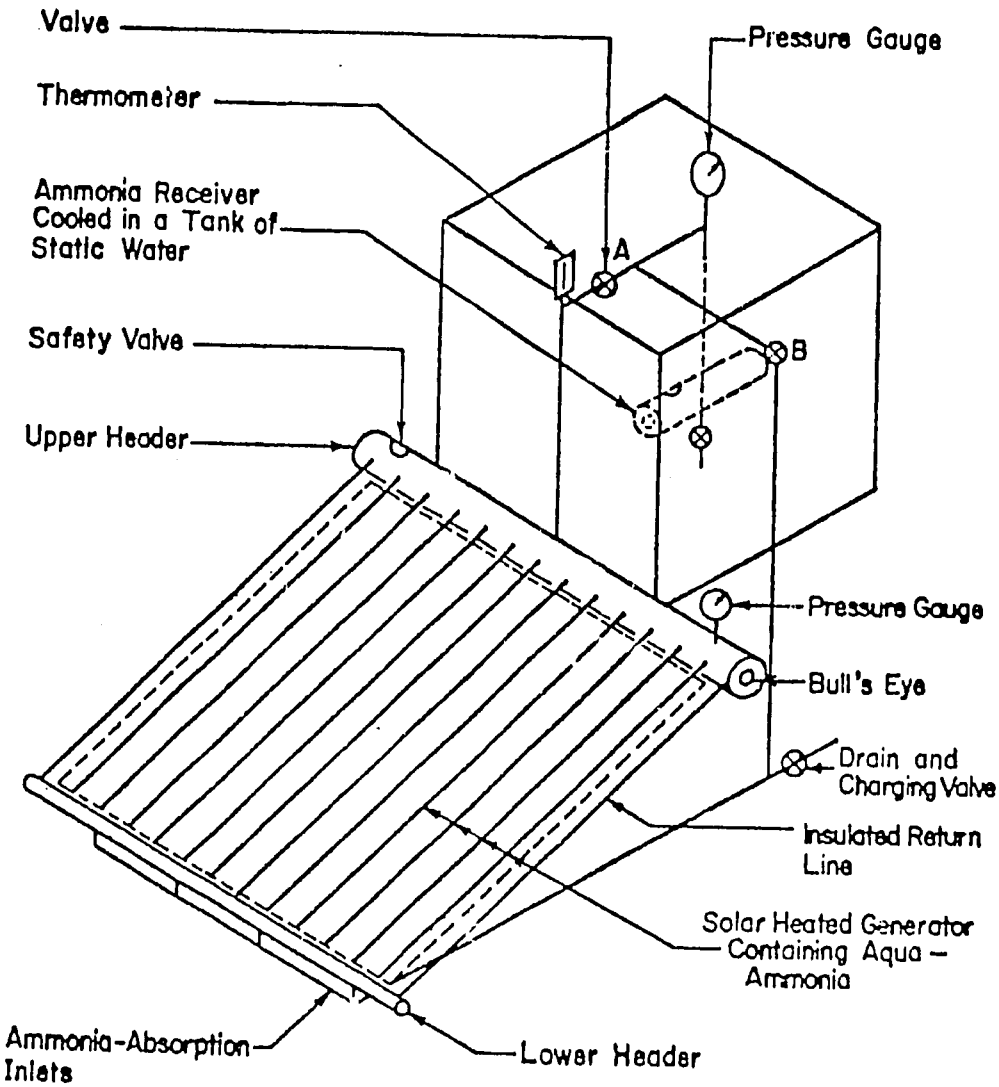

Fig. 6 The First AIT Solar Refrigerator
(Kornsakoo, 1975)

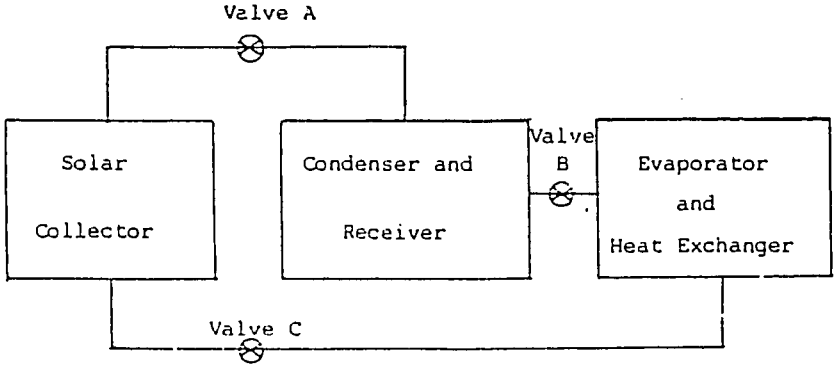

Fig.7 Block Diagram of Small Prototype Refrigerator
(Jarimopas, 1976)

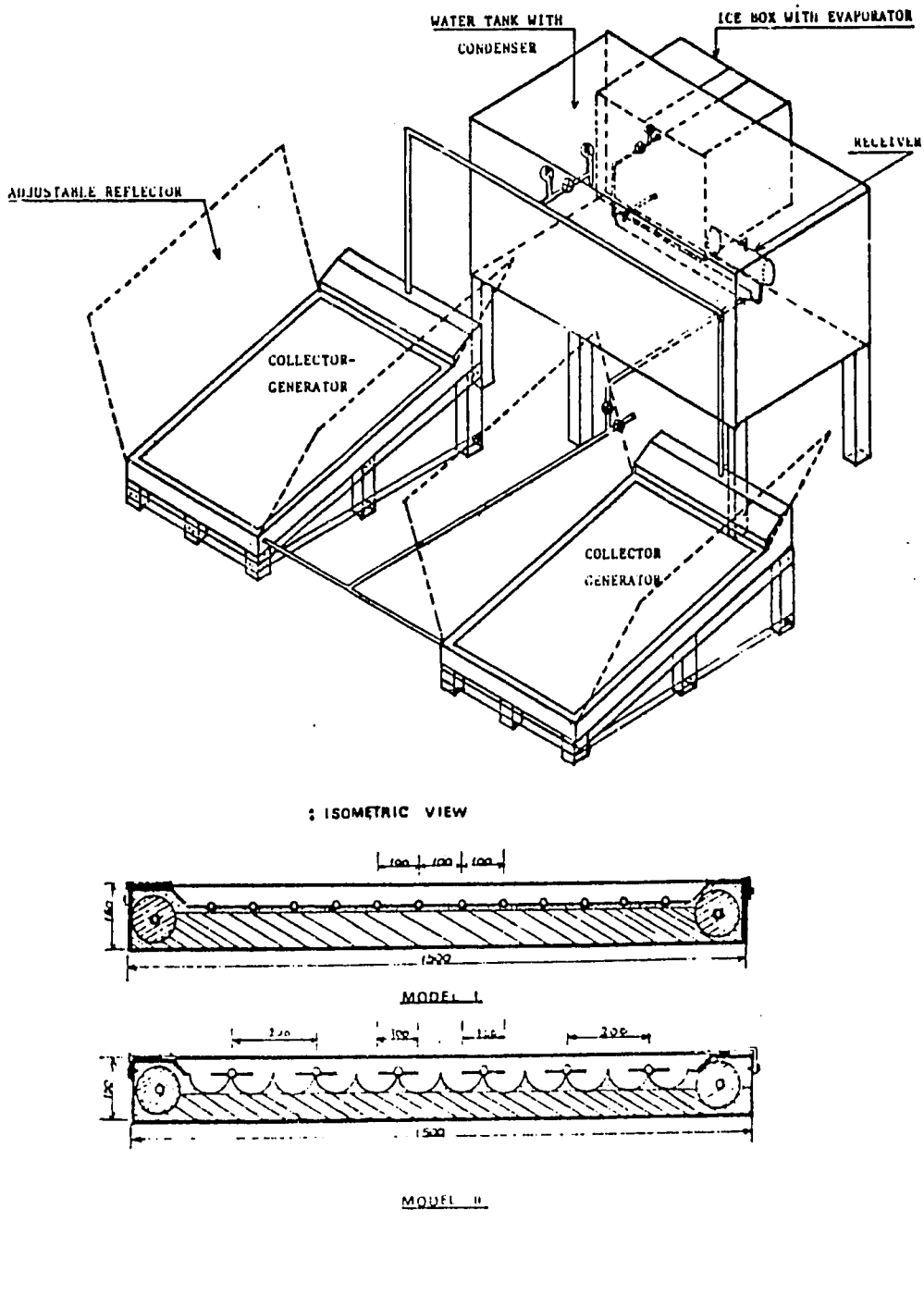

Fig. 8 Schematic Diagram of the Two Solar Refrigerator Models Developed at AIT (Exell and Kornsakoo, 1981)

In 1983 Exell and Kornsokoo further modified the collector by using liquid seal and flood evaporator instead a hand valve and dry evaporator respectively (Fig. 9). The problem of ammonia vapor leakage to the solution at the top header and hand operated expansion valve was solved. The new collector had a narrow shape with small risers and wider return lines on each side which served as a reservoir. In this way heat capacity and heat loss during generation could be reduced. Heat dissipation in the collector during refrigeration could be achieved by opening a back insulator of the collector panel.

The liquid seal acted as a directional valve, allowing ammonia vapor flow only to the condenser during generation and return only to the bottom of the collector during refrigeration. It could be automatically operated without any auxiliary power. The system was designed to produce 100 kg of ice per day using 25 square meters of collector. The results showed that only 75 kg of ice could be obtained. They concluded that the evaporator did not function well and would have to be redesigned.

C. SOURCES OF SOLAR HEAT

As the absorption refrigerator requires heat at a temperature of about 80 - 90°C for its generator, it is technically possible that solar heat may be provided from solar collectors being developed locally. Based upon the Winston's collector, (Rabl, 1976), a few designs of compound parabolic concentrators have been constructed and tested at KMITT (Jitnomrat, et al., 1982). The compound parabolic concentrators will easily supply solar heat at the required temperature. Improved designs and their economic aspects are still being investigated.

Solar heat may also be supplied from a solar pond which acts as a solar collector and storage. A preliminary study on a 16 m^2 solar pond was conducted at KMITT (Rajanasaroj and Chantranuluck, 1982). Construction on a 52 m^2 solar pond was recently completed. Experimental and theoretical studies on the pond are still in progress. Since sodium chloride salt is readily produced along the coasts of the country and from rock salt in the northeastern region, the solar pond (which can normally supply heat at about 90°C) appears to be another attractive candidate as the solar heat source for the absorption refrigerator.

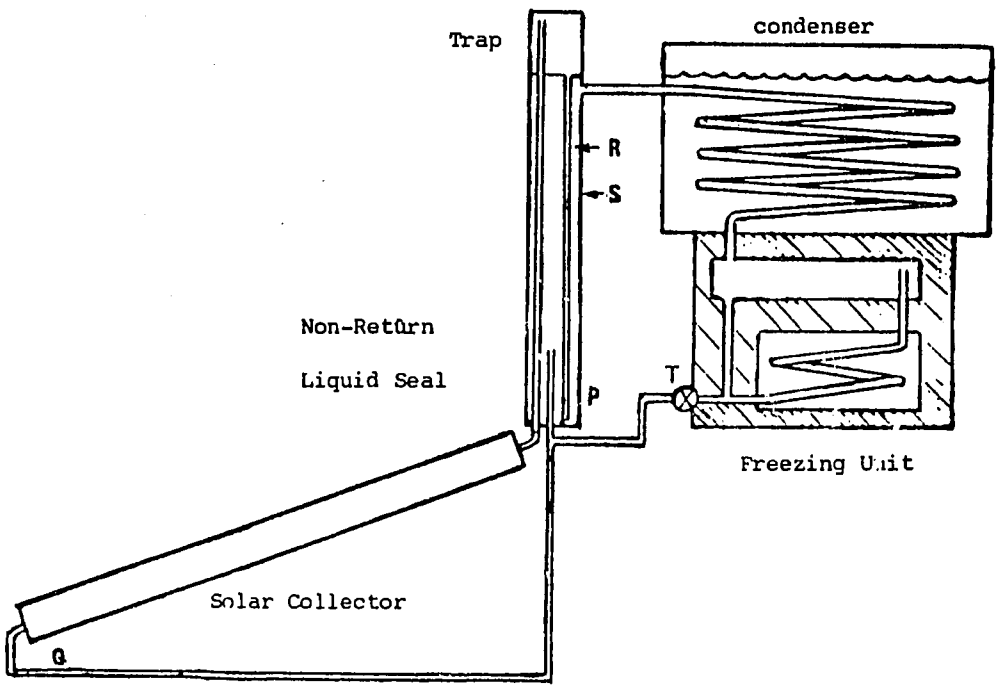

Fig. 9 Schematic Diagram of the New Solar Refrigerator Model Developed at AIT (Exell, 1984)

Previous Page Blank

Chapter 4

Project Design

Previous Page Blank

PROJECT DESIGN

A. PROJECT PLAN

Recent development on solar refrigeration has followed the path of Swartman and Swaminathan (1971), who modified the system developed earlier by Chinnappa (1962). Swartman and Swaminathan's modification was to combine various parts of the system together, e.g. the generator and the absorber, in order to reduce parts and, hopefully, to reduce the investment cost. The development at AIT has followed this path and through persistent efforts much improvement has been realized. One obvious drawback of such a system is the inability to optimize the performance of the two components which have been integrated into one. For example, the absorber-generator unit, which is also the energy (solar) collector, has gone through several stages of development in an attempt ot maximize heat gain during generation and maximize heat loss during absorption. Moreover, the collector area, thus the generator size, is directly proportional to the capacity of the system. This part of the system is particularly expensive since it must accommodate high pressure during the generation period; therefore, the system appears to lack the advantage of economy of scale. Our design is to try to eliminate the previously mentioned limitations. The generator and absorber are separated, and the collector system forms another separate unit so that each part can be optimized and, hopefully, economies of scale can be realized. Additional capacity can be achieved through the addition of cheaper collectors. Our system could also utilize a greater range of sunshine period.

Details of the design of the system are given in the subsequent section.

B. MATERIAL QUANTITY IN THE SYSTEM

For a given capacity, i.e. 15 kg of ice per working cycle, starting with liquid water at 0°C (it is assumed that the ice was kept in the evaporator during the day until it was completely melted at the beginning of the next refrigeration period -- the night), the heat of fusion was

$$15 \times 80 \times 4.19 = 5{,}028 \quad \text{kJ}$$

From the P-T-X diagram (ASHARE, 1981) (Fig. 4.1) an average heat of evaporization of ammonia between -5°C and -20°C is:

$$\tfrac{1}{2}\,(1{,}237 - 1{,}260) - \tfrac{1}{2}\,(-30 - 98) = 1{,}312.5 \quad \text{kJ/kg}$$

Thus, the liquid ammonia required would be

$$5{,}028/1{,}312.5 = 3.83 \quad \text{kg}$$

Using a safety factor of 1.5, the amount of liquid ammonia required would be 5.74 kg.

From the material balance it was calculated that 38.76 kg (approximately 40 kg) of 47% (kg wt) of ammonia solution was used.

C. HEAT BALANCE IN THE SYSTEM

The heat balance in each component of any given process can be computed from equations 2, 6, 7 in the section on theory. The following calculation was based on 40 kg of 47% ammonia solution.

Heating process CD; quantity of heat required 40 [75 - (-130)] = 8,200 kJ
Boiling process DA; " " 34.08 (170) - 40 (75) + ½ (1,500 + 1,425) (5.92) = 11,451.6 kJ
Cooling process AB; " " 34.08 (-110-170) = -9,542.4 kJ
Absorption process BC 40 (-130) - 34.8 (-110) - ½ (1,365 + 1,350) (5.92) = -9,409.2
Heat dissipated from rectifier 5.92 [1,305 - ½ (1,500 + 1,425)] = -932.4 kJ
Heat in condenser 5.92 [140 - 1,305] = -6,896.8 kJ
Heat in evaporator 5.92 (1,312.5) = 7,770 kJ
Overall Heat Balance
Heat input to the system = Heat output from the system
Heat in generator + Heat in evaporator = Heat in condenser + Heat in rectifier + Heat in cooling process + Heat in absorption process

8,200 + 11,451.6 + 7,770 = 6,896.8 + 932.4 + 9,542.4 + 9,409.2
27,421.6 = 26,780.8
Difference of heat = 640.8 kJ (2.36% Total Heat)

C.O.P. can be calcualted as
C.O.P. = 7,770/8,200 + 11,451.6
= 0.395

D. ENGINEERING DESIGN OF THE MODEL

Generator

From the P-T-X diagram (Fig. 10), it can be seen that there are two processes occurring within the generator. They are the heating process to heat the solution up to the temperature of 72.5°C and the pressure of 1,100 KPa and the boiling process at 1,100 KPa where the final solution temperature will reach 90°C. The amounts of energy required for the heating and boiling processes are 8,200 kJ and 11,451.6 kJ, respectively.

In order to meet the required surface area for heat transfer and to withstand the high pressure, the shell and tube heat exchanger design was selected. The shell-side contains aqua-ammonia, and is equipped with

Fig.10 P-T-X Diagram for Design Condition

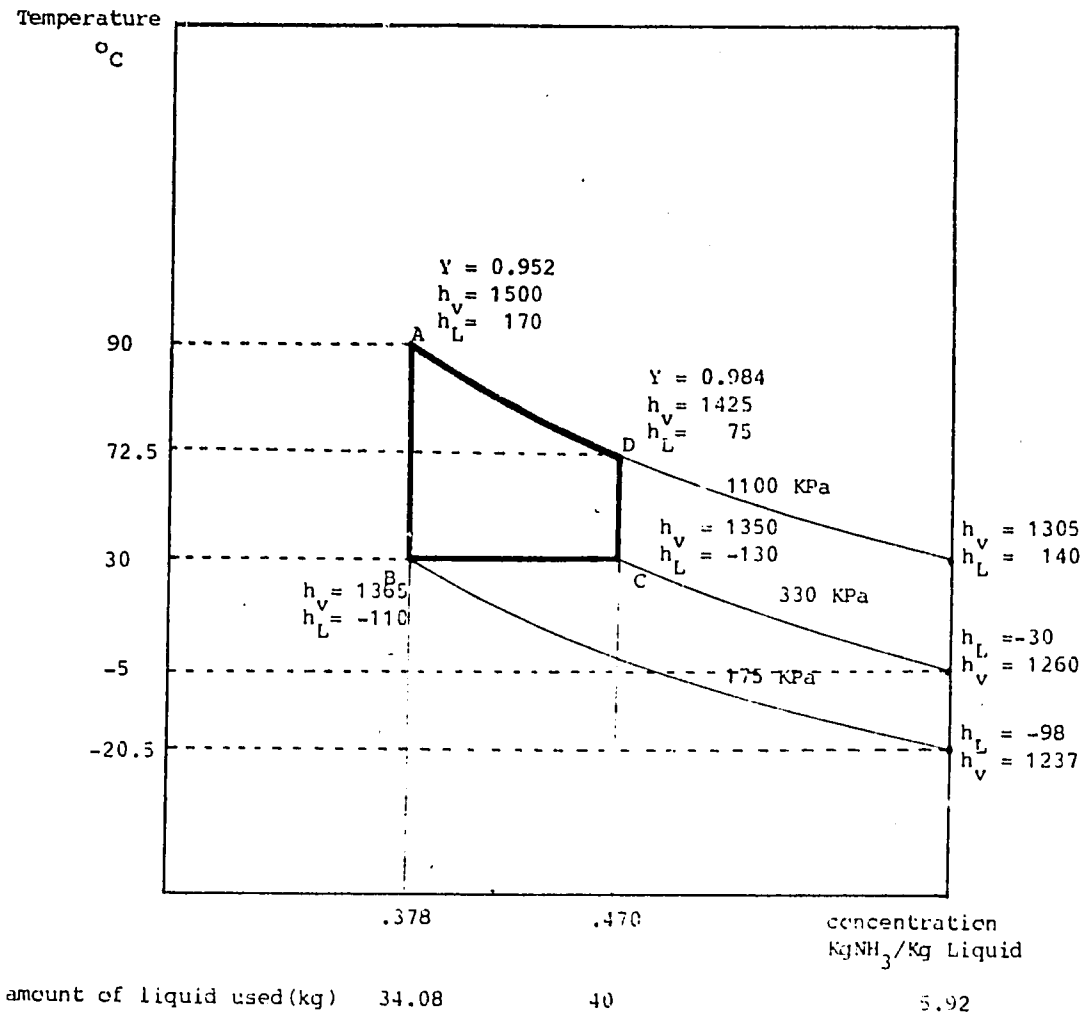

h_v = Enthalpy of Saturated Vapor KJ/Kg Vapor

h_L = Enthalpy of Saturated Liquid KJ/Kg Liquid

Y = Vapor Composition $KgNH_3$/Kg Vapor

sight-glasses and a level indicator. Hot water is passed through the tube side thermosyphonically.

The engineering objective was to produce 5.74 kg of ammonia within three hours of operation. The tubes were made of 26 steel pipes of 5.08 cm diameter, with each tube 91.4 cm in length. The square-pitch arrangement was selected. The 19.2 cm-diameter shell was made of steel of 0.9 cm thickness. The shell was equipped with sight-glasses, pressure taps and a thermo-well. The schematic drawing of the generator is shown in Fig. 11.

Rectifier

The purpose of the rectifier was to enrich the ammonia vapor from the generator, which would contain 4% by weight of water vapor at the condition of the generator. By dissipating heat to the atmosphere, the ammonia vapor leaving the rectifier should be at least 99% pure, at which point the temperature of the vapor should be less than 67.8°C. The chosen rectifier consisted of two tubes, each 3.81 cm in diameter and 152 cm in length. The rectifier was equipped with a 0.055 cm thick longitudinal fin made of copper.

Condenser

The purpose of the condenser was to transfer the heat required to condense ammonia vapor to liquid ammonia at 30°C. The condenser coil was designed to dissipate heat to the surrounding air and to a pool of water. The coil consisted of three sections:

a) Air-cooled desuperheater. This part of the coil was made of a 3.81 cm diameter tube equipped with external transverse copper fins. The fins were 7.81 cm diameter, 1 mm thick and were spaced at 1.25 cm intervals (Fig. 13). The calculated length of this section was 700 cm.

b) Water-cooled desuperheater. This part of the coil was made of steel with the same dimensions as that of part (a) but without the fins. The fin was thought to be ineffective since most of the resistance to the heat transfer process was from within the tube. The calculated length of this section was 670 cm.

c) Water-cooled condenser. This part of the coil was equipped with transverse copper fins since the condensing process within the tube would increase the heat flux, making the addition of fins beneficial. The calculated length was 1,080 cm.

The coil was placed within a pool of water; the schematic diagram of the condenser is shown in Fig. 12, 13.

Receiver

The receiver for storage of liquid ammonia was made of steel 21.91 cm in diameter and 0.82 cm in thickness. The receiver was designed to store

Fig. 11 Structure of Generator

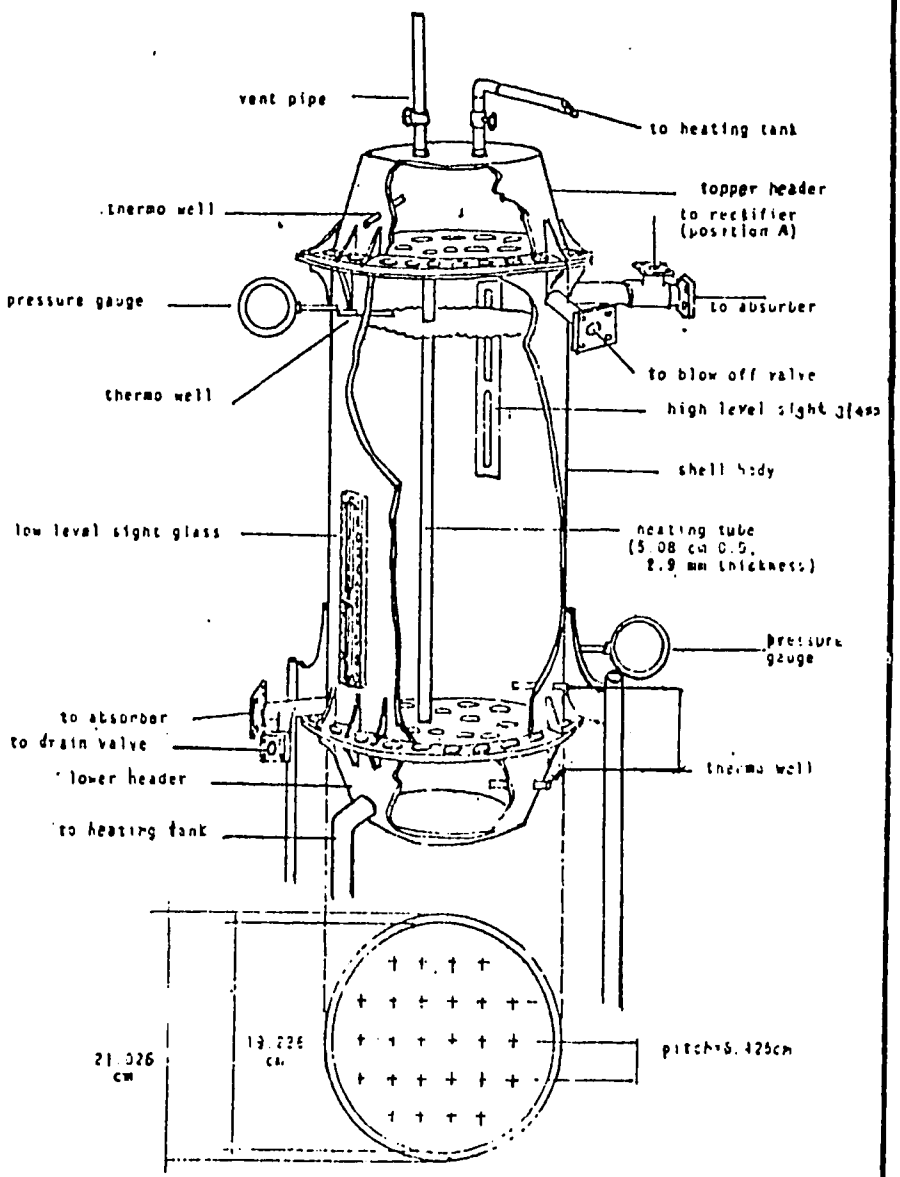

Fig.12 Top View of Fabricated Condenser

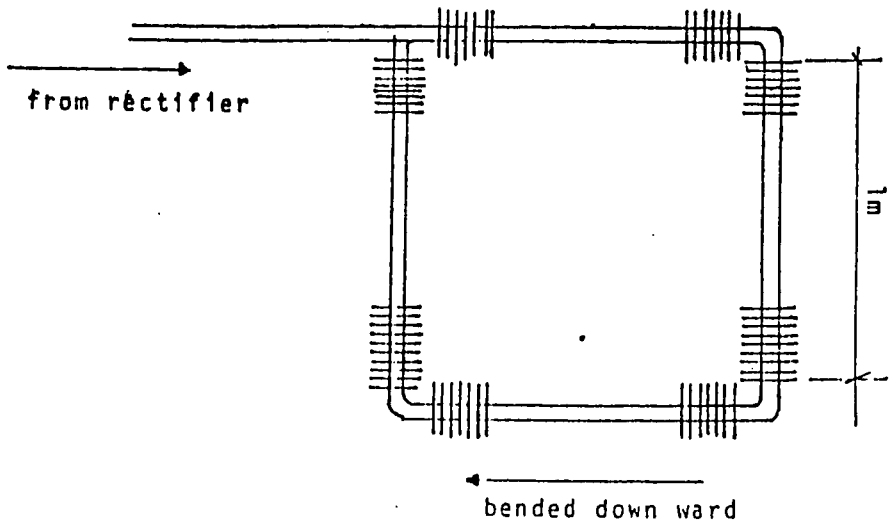

Fig. 13 The Fin Tube Used in The First and Third Part of Condenser

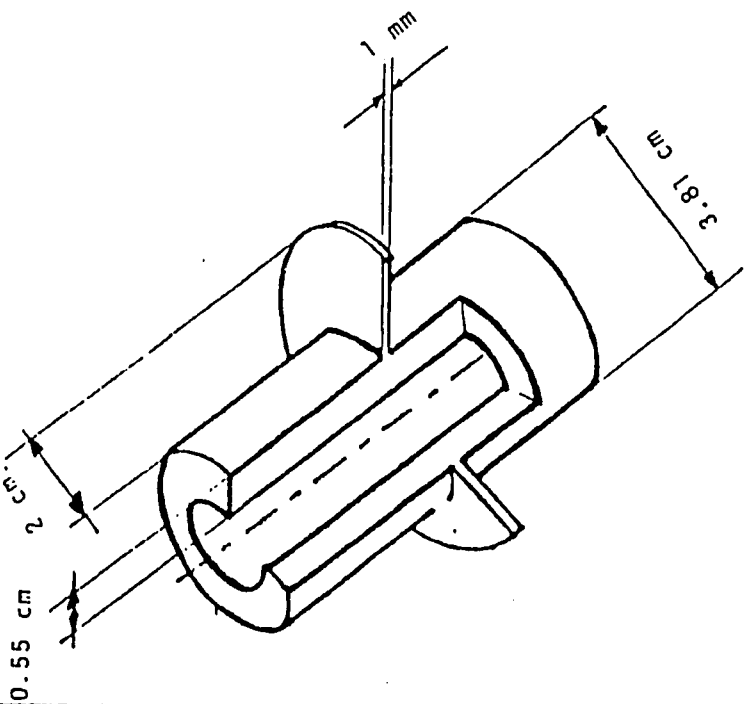

7 kg of liquid ammonia and has a volumetric capacity of 12 liters. The receiver was equipped with a sight glass and level indicator.

Evaporator

The dry type evaporator was selected for the model, but was subsequently changed to the flood type in later development. From the P-T-X diagram (Fig. 10), starting at the design pressure of 175 kPa, the temperature of the evaporator would vary from -20.5 to -5°C during the evaporative process. The evaporator was designed to operate over a ten-hour period; ethylene glycol solution (50% by volume) was used as a secondary refrigerant to aid the heat removal process. The outside surface of the evaporator was insulated using polystylene foam. The schematic diagram of the evaporator is shown in Fig. 14.

Absorber

The absorber was of the riser-header type. The risers were made of five 11.43 cm diameter tubes, with each tube 80 cm long. The headers were made of the same diameter tubes (134 cm in length). The absorber was placed vertically in a water cooling tank, with the bottom header equipped with ammonia vapor distributers, small orifices to distribute ammonia vapor during the absorption process. Fig. 15 shows a schematic diagram of the absorber.

Water Cooling Tank

The cooling tank contained 2,170 kg of water which acted as the heat sink for the condenser and the absorber units. The water temperature was not to rise more than 2°C during the process. Fig. 16 shows the schematic diagram of the tank. The absorber was installed in the deep part of the tank and the condenser in the shallow part of the tank.

E. DESIGN OF THE PROTOTYPE

After the completion of the test run of the model, many modifications were made on the original design. New concepts were tested to improve the performance of the model and details of its design were modified. At the time of the writing of this report, modifications were still being tested and a final report can not be written until the test of the prototype is completed.

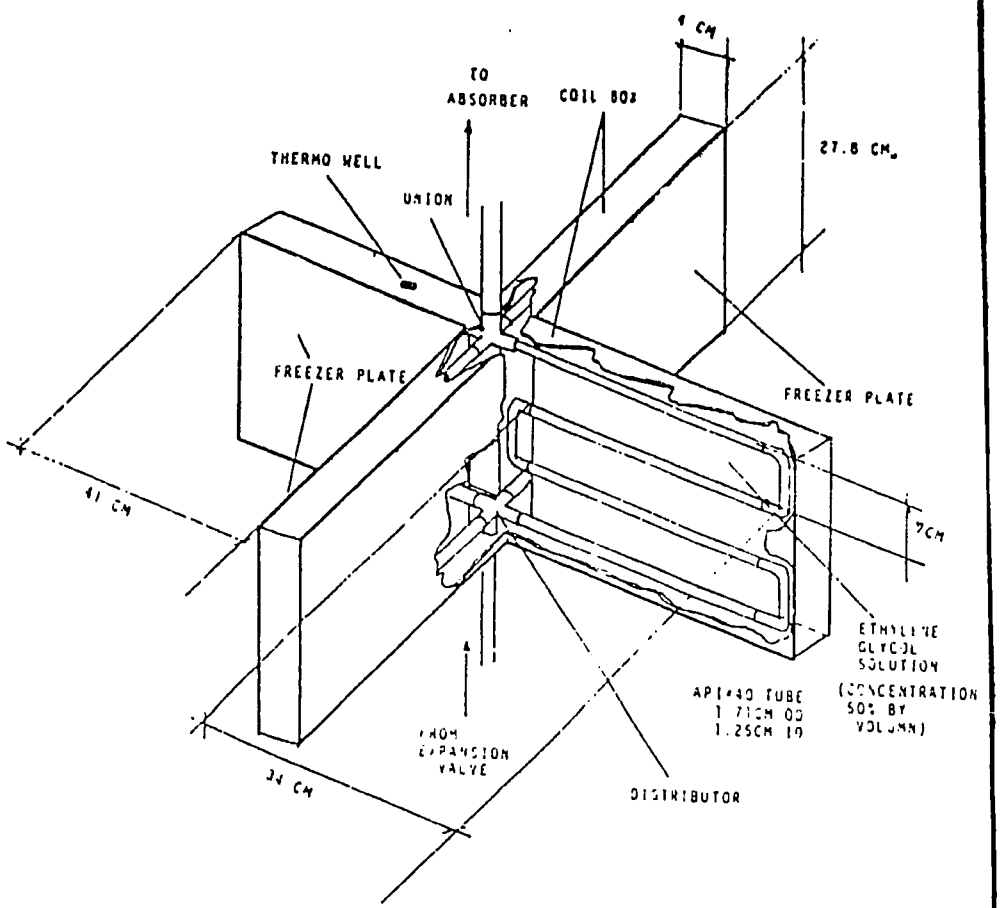

Fig. 14 Structure and Dimension of Evaporator Coil

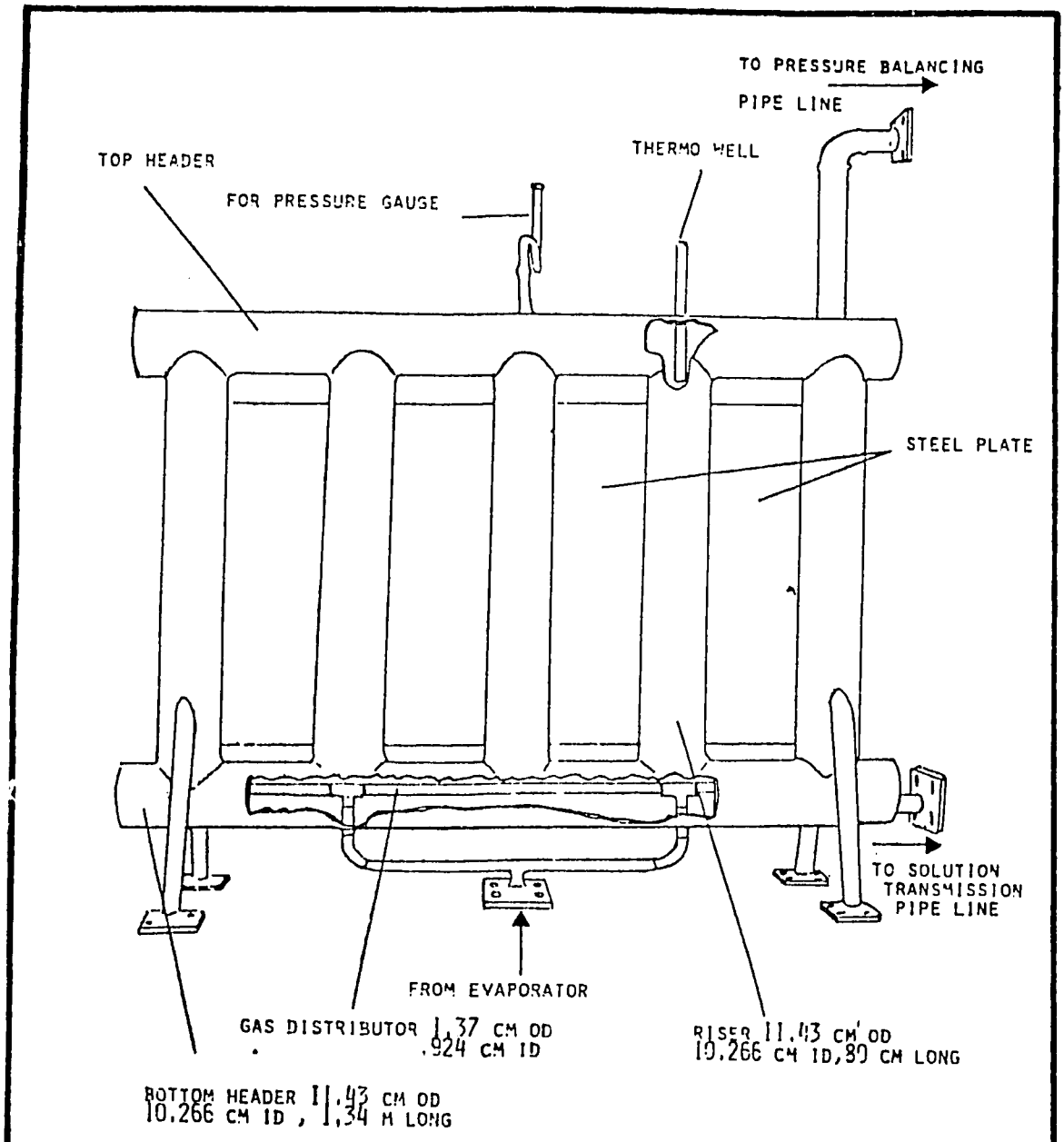

Fig. 15 Absorber

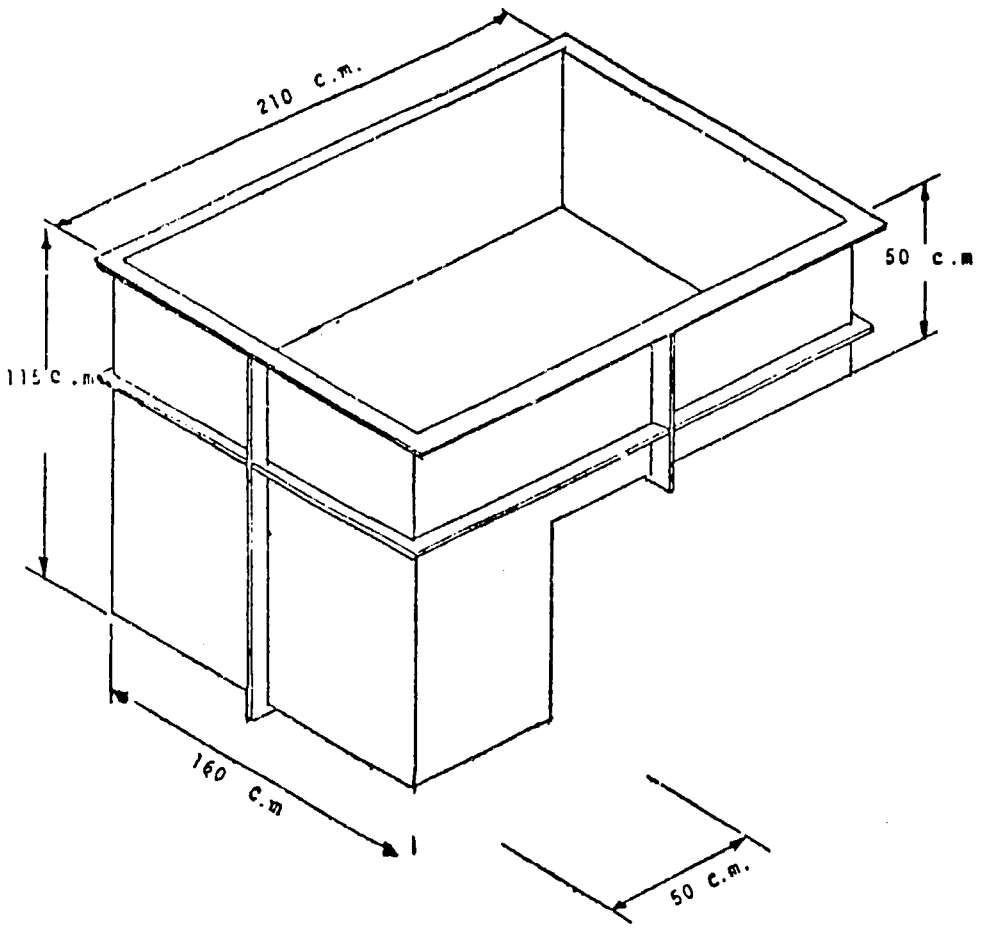

Fig.16 Dimension and Structure of Cooling Water Tank

Chapter 5

Techniques and Procedures

Previous Page Blank

TECHNIQUES AND PROCEDURES

A. MEASUREMENT METHODS

1. Due to the high pressure of the system thermo-wells were used through out. Thermocouples and thermometers were calibrated and inserted into the thermo-well for the temperature measurement. Fig. 17 shows the positions where temperature were measured.

2. Pressure in the various parts of the system was measured by a calibrated ammonia pressure gauge. Positions where measurements were made are shown in Fig. 18.

3. Volumetric measurements were made by the pre-calibrated level indicator on the sight-glasses.

4. Concentrations were calculated based on the P-T-X diagram.

B. TEST PROCEDURES

Fig. 19 shows the perspective drawing of the complete system. The hot water was supplied by a heating system equipped with one-kw and two-kw electrical heaters. The temperature can be controlled to follow the temperature pattern of a solar collector.

The system was evacuated and 42 kg of aqua-ammonia of 0.47 ammonia weight was filled into the generator. Valves V_{13} and V_{11} were turned on to allow hot water to flow into the generator. All other valves except V_2 and V_9 were closed until 5.74 kg of liquid ammonia was collected in the receiver. V_2 and V_9 were then closed, while V_4 and V_7 were opened to let the hot but weak aqua-ammonia solution to flow from the generator into the absorber. After all of the solution was transferred, valves V_4 and V_7 were closed and the solution in the absorber was allowed to cool to 30°C. Valve V_8 was slowly opened to allow the liquid ammonia to flow slowly into the evaporator and subsequently evaporate into the absorber. When the receiver was emptied, valve V_8 was closed. At this point, ice of the desired amount should be present in the ice box. To begin the next cycle of generation, valves V_4, V_7, V_3 and V_6 were opened to allow the strong solution to move down to the generator by gravity. After all of the solution was transferred, valves V_4, V_7, V_3 and V_6 were closed. The system was then ready for a new cycle.

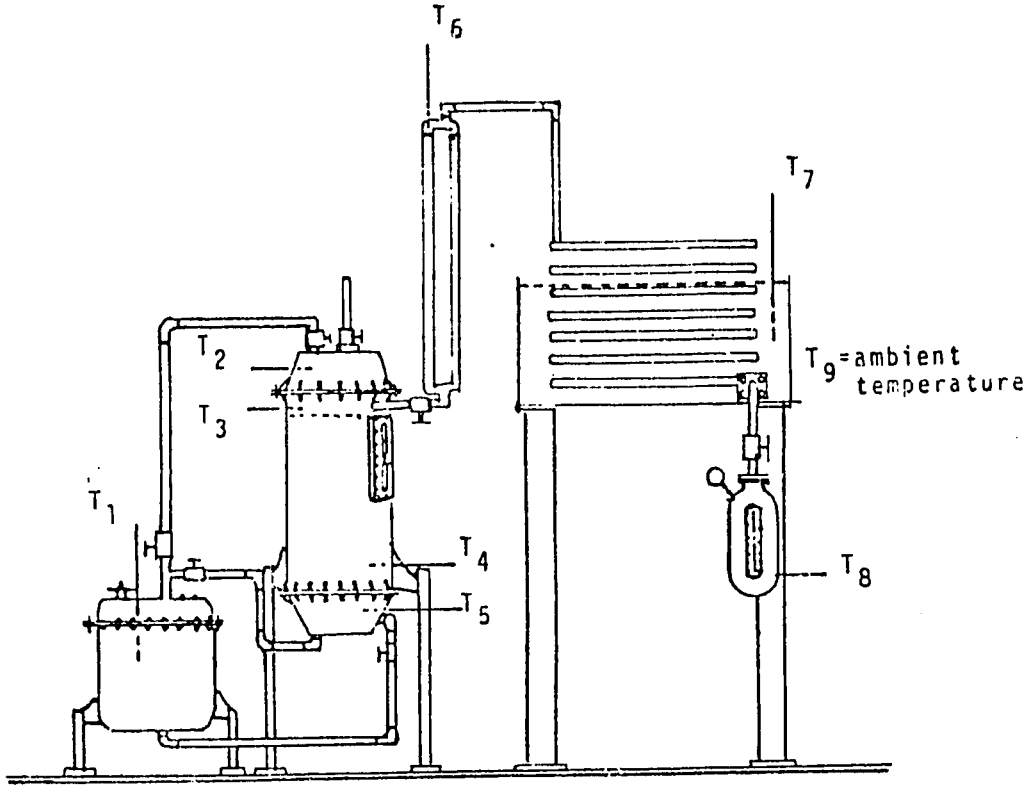

Fig. 17 The Temperature Measuring Points in the Generation Process

Fig. 18 The Schematic of the System

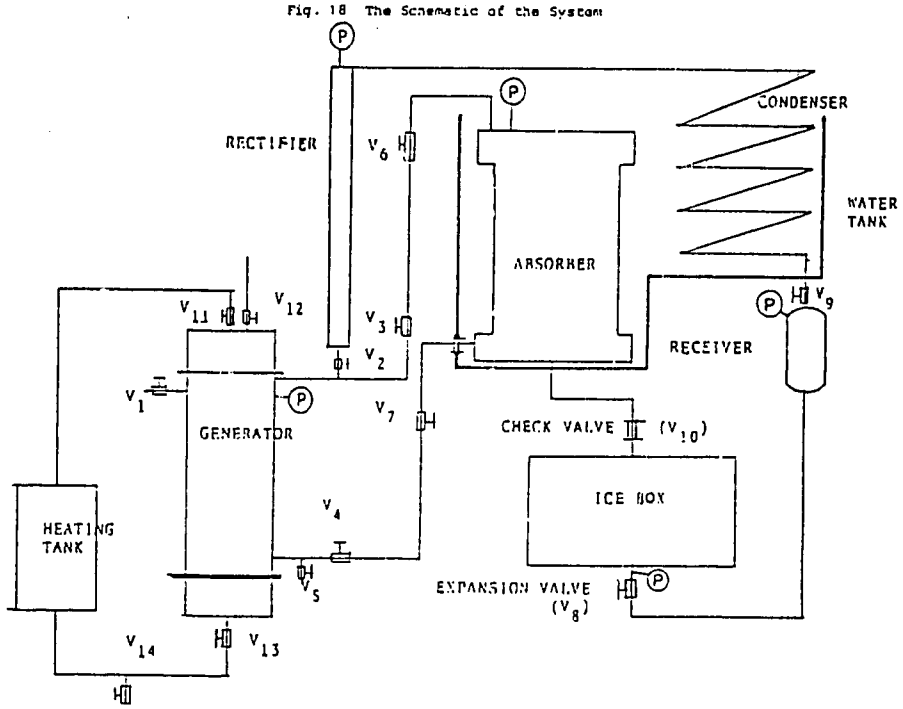

Fig.19 The Perspective View of Installed Plant

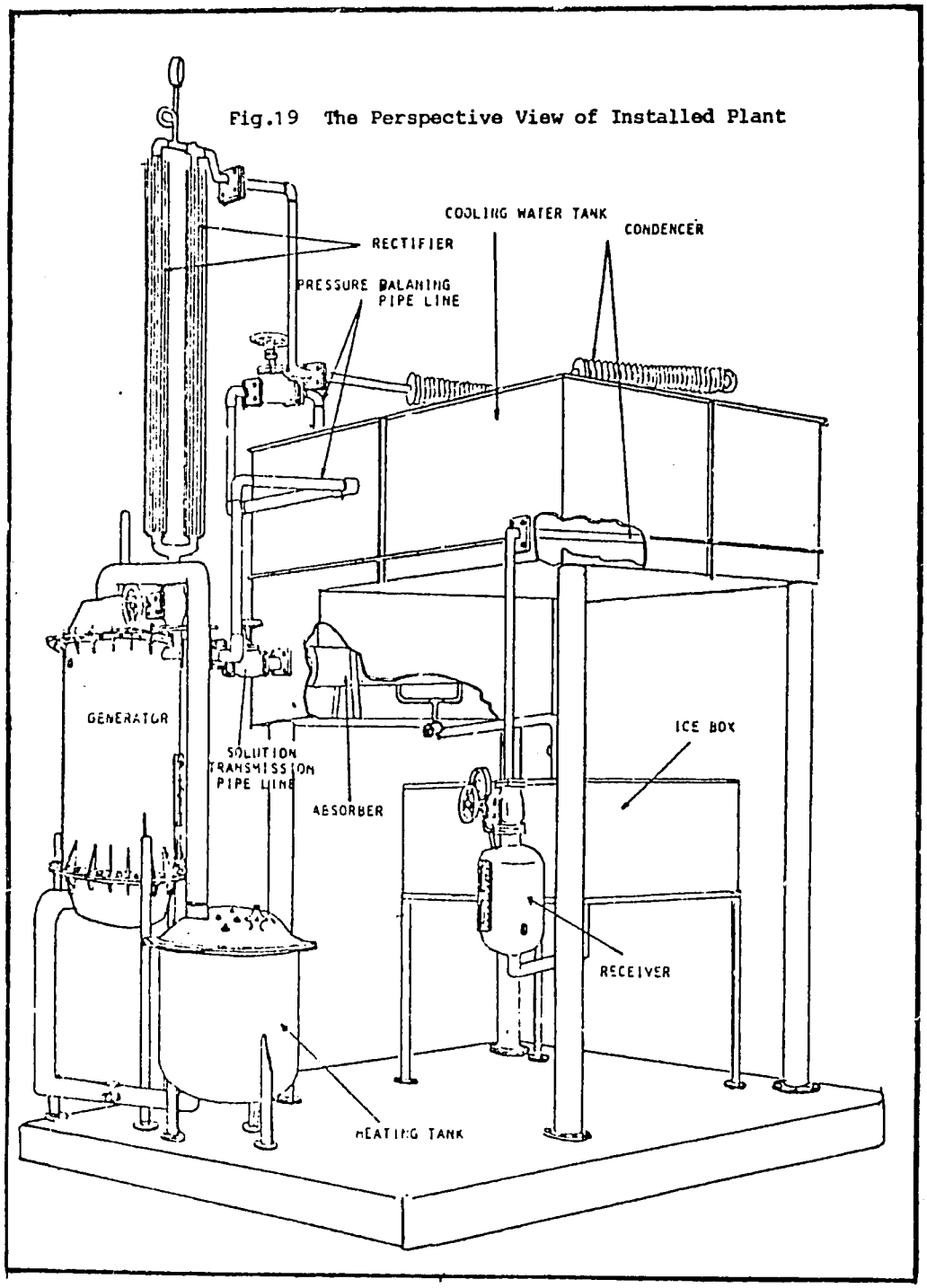

Chapter 6

Results and Discussion

Previous Page Blank

RESULTS AND DISCUSSION

Model Test Results

The output of the hot water heating system was controlled to follow the pattern of a solar collector (See Fig. 20) Starting from 8.30 A.M. the temperature of the vapor and the liquid inside the generator (T_3 and T_4) reached its highest values at 3.00 P.M. The boiling started at 11.00 A.M. The cooling water temperature in the water tank increased slightly. More than 5.5 kg of liquid ammonia was collected in the receiver.

The weak solution in the absorber took approximately three hours to cool down to 30°C after it was transferred from the generator. During evaporation, the lowest temperature obtainable at the surface of the expansion valve was -14°C. The temperature of the ethylene glycol solution was -2°C within 10 hours. A total of 12.7 kg of ice was produced. Table 1, Table 2 and Fig. 21 show representative data. Fig. 22 shows the thermodynamic cycle of the experimental results.

It was found that using the dry type evaporator required an experienced operator. The evaporator was redesigned and further studies are under progress at the time of this writing. The improvement made upon the models and their subsequent studies, together with the prototype results, will be reported subsequently, possibly in mid-1985.

Conclusion

1. The successful test run of the model unit brought about the confidence to try several modifications of the model, and experimental studies are being carried out continuously. The results obtained will be reported appropriately at the end of each specific study. Meanwhile, the prototype unit is being built; it is expected to be completed in December 1984.

2. Within a few years, the research team should be able to develop further the technological process of ice making by solar energy in the rural village. Technically, ice has been made; however, the economic and social aspects will have to be evaluated after further technological improvements.

3. The research program has served to create additional research activities within KMITT, and has resulted in an extensive training program for individuals involved in solar refrigeration research.

Table 1

Temperature Pressure Volume of Solution of Test No.4 (2nd Run)

	Time	T_1 (°C)	T_2	T_3	T_4	T_5	T_6	T_7	T_8	T_9	P_G	P_R	V_G	V_R	Note
Am	8.30	4.2	37.3	36.3	36.6	35	28.5	28.5	38.6	29	3	10	49.8	-	
	9	44.2	45	41	38	40	28.5	28.5	29	29	3.76	10.1	49.8	-	
			51.4	46.4	41	43	29	29	29.7	30	4.7	10.1	49.8	-	
			.5	52.6	44	45.4	29.5	30	29.5	30	5.4	10.2	51	-	
	10.30	63..	62.1	56.8	49.5	48	29	30	29.5	30	6.21	10.2	51.2	-	
	11	73.4	72.1	65	52.4	57	29.5	30	30	30	7.57	10.2	51.8	-	Open V_2 and V_9
	11.30	78	80.5	74	71	70.3	32	31.5	30	30	10.22	10.22	52	-	
	12	87.5	87.8	82.1	75.7	77	34	31.8	30	31	10.36	10.36	49.8	3.6	
	12.30	91.7	94.6	86.3	82.5	80	35	32	31	31	10.36	10.36	48.6	5.9	
Pm	1	98	96.4	88	86.2	87.5	35	32	31.5	32	10.22	10.22	46.1	7.25	
	1.30	96.6	98.3	89.6	87.5	89	39	30.7	31	31.4	10.36	10.36	45.6	9.28	
	2	97	99.1	90.4	89.1	90	39.8	33	31	32	10.36	10.36	45	*	
	2.30	98.4	101.4	91.1	89.5	92.2	40	31	31	32	10.36	10.36	*	*	
	3	99.5	102.5	91.8	90	94	42	30.5	31	31	10.36	10.36	*	*	* = the level of Solution (or ammonia) was unseenable
	3.30	98.6	101.5	91	90	94.5	40.2	31.9	31	31.5	10.36	10.36	*	*	
	4	99.4	100	90.6	91.1	92.6	36	30	31	31.1	10.36	10.36	*	*	
	4.30	98.6	99.4	89.3	91	91	32	30	30.5	30.4	10.36	10.36	*	*	
	5	97.3	96.4	88.4	87.3	91	31	31.5	30	30.5	10.36	10.36	*	*	
	5.30	91.6	92.1	86.1	87.1	88.7	31	30	30	30	10.36	10.36	*	*	
	6	90	91.8	85	85.4	85.2	31	30	30	30	10.36	10.36	*	*	

Table 2

Concentration VS. Time (Test No.4, Run 2)

	Time	T_2	C_{T3}	C_{T4}	C_R	W_R	W_{GT3}	W_{GT4}	W_{GR}	Note
Am	8.30	37.3	.47	.47	1	-	41	41	41	
	9	45	.476	.495	1	-	41	41	41	
	9.30	51.4	.48	.511	1	-	41	41	41	
	10	58.5	.47	.514	1	-	41	41	41	
	10.30	62.1	.468	.51	1	-	41	41	41	
	11	72.1	.456	.53	1	-	41	41	41	
	11.30	80.5	.465	.487	1	-	40.61	41.13	41	Open V_2 and V_9
	12	87.8	.423	.459	1	2.15	37.66	40.16	38.85	
	12.30	94.6	.4	.419	1	3.5	36.21	37.4	37.5	
Pm	1	96.4	.389	.395	1	4.3	35.56	35.91	36.7	
	1.30	98.3	.383	.392	1	5.5	35.218	35.74	35.5	
	2	99.1	.379	.386	1	*	34.99	35.39	*	
	2.30	101.4	.376	.384	1	*	34.82	35.27	*	
	3	102.5	.371	.379	1	*	34.55	34.99	*	
	3.30	101.5	.379	.379	1	*	34.93	34.99	*	
	4	100	.381	.377	1	*	35.1	34.88	*	
	4.30	99.4	.386	.377	1	*	35.39	34.88	*	
	5	96.4	.39	.392	1	*	35.62	35.74	*	
	5.30	92.1	.4	.394	1	*	36.21	35.8	*	
	6	91.8	.405	.402	1	*	36.58	36.34	*	

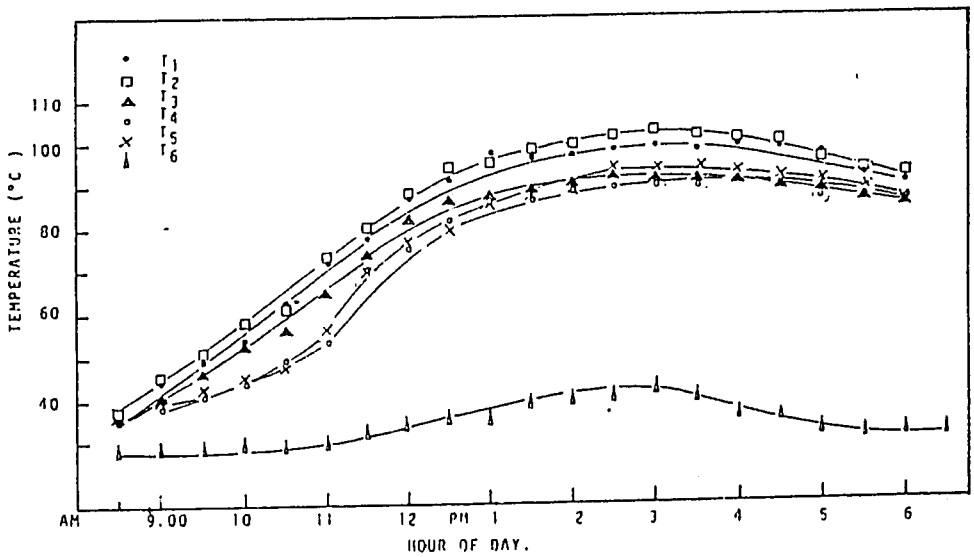

Fig. 20 The Variation of Temperature in the System with Time

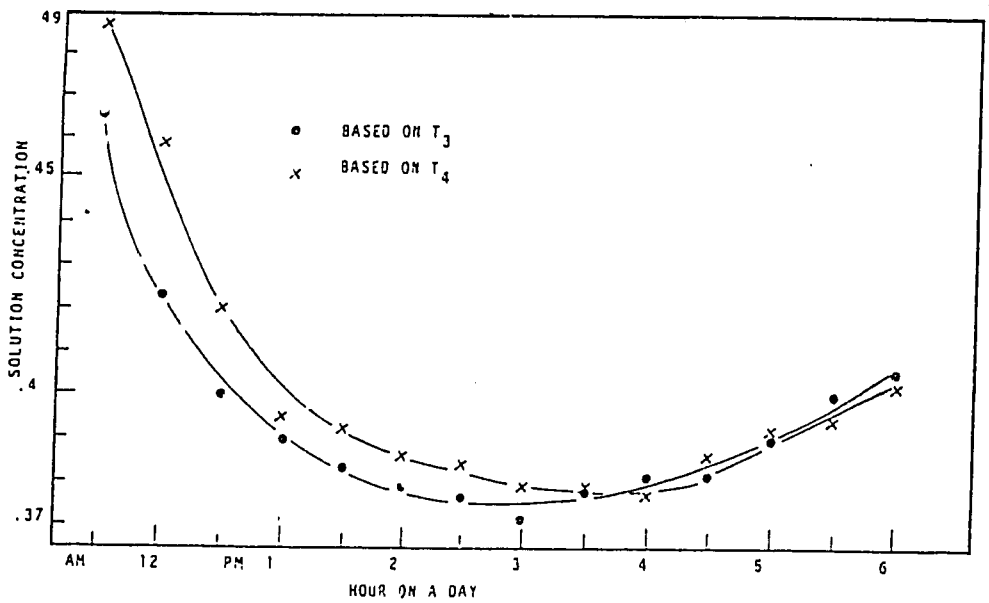

Fig. 21 The Variation of Solution Concentration with Time (Data from Table 2)

Fig. 22 The Cycle of Solution in The Generator and Absorber Based on T_3 (Data from Table 2)

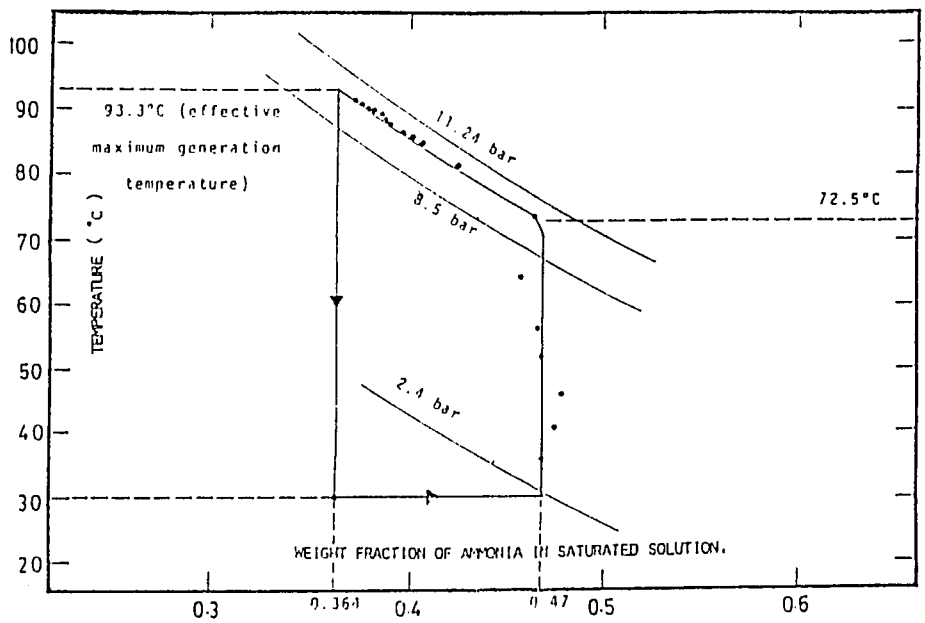

REFERENCES

ASHARE Fundamentals Handbook, New York, 1981

Chinnappa, J.C.V. *Performance of Air Intermittent Refrigerator Operated by a Flat-Collector*, Solar Energy, Vol. 6, 1962, pp. 56-59.

Exell, R.H.B. and S. Kornsakoo, *Design and Testing of a Solar Powered Refrigerator*, AIT Research Report, No. 126, 1981.

Exell, R.H.B., S. Kornsakoo, and S. Oeapipatanaku, *Village-size Solar Ice Maker*, Proceedings of Seminar on Momentum Heat and Mass Transfer, AIT and Prince of Songkhla University, Hatyai, Songkhla, April 1-3, 1983.

Farber, E.A., *Design and Performance of a Compact Solar Refrigeration System*, International Solar Energy Society Conference, Paper No. 6/58, Melbourne, Australia, 1970.

Jarimopas, B., *Development of a Solar Powered Refrigerator*, AIT Thesis No. 1098, 1976.

Jitnomrat, N., et al., *A Study of Compound Parabolic Concentrators Performances*, Research and Development Bulletin (R & D Bulletin), KMITT, Vol., 5 No. 2, 1982.

Kornsakoo, S., *The Design and Development of Solar Powered Refrigerator*, AIT Thesis, No. 1098, 1975.

Moore, G.L. and E.A. Farber, *Combining the Collector and Generator of a Solar Refrigeration System*, American Society of Mechanical Engineering, Paper 67-WA/Sol-4, 1967.

Rabl, A., *Comparison of Solar Concentrators*, Solar Energy, Vol. 18, 1976, pp. 93-111.

Rojanasaroj, S. and S. Chantranuluck, *Performance of Solar Pond for Greater Bangkok Metropolis*, Regional Seminar on Solar Electric Power Systems, KMITT-UNESCO, Bangkok, January, 1982.

Soponronnarit, S., *Improvement in the Efficiency of the Solar Powered Refrigerator*, AIT Thesis No. 1254, 1977.

Swartman, R.K. and C. Swaminathan, *Solar Powered Refrigeration*, Mechanical Engineering, June 1971, pp. 22-24.

Trombe, F. and M. Foex, *Economic Balance Sheet of Ice Manufacture with an Absorption Machine Utilizing the Sun as the Heat Source*, New Source of Energy, Vol. 4, V.N. Publication Sales, No. 63, I, 1964, pp. 56-59.

United Nations, *United Nations Conference on New Sources of Energy*, Rome, 1961.

Worsoe-Schmidt, P., *Solar Refrigeration by Means of a Solid-Absorption Process*, Technical University of Denmark, Report 01, 1978, pp. 30-78.

Annex

Previous Page Blank

ANNEX

SOLAR STILLS WITH VERTICAL & FLAT ABSORBING SURFACES

M. Ramli and P. Wibulswas

Asian Institute of Technology, P.O. Box 2754, Bangkok.

ABSTRACT

In this work, solar stills with vertical and flat absorbing surfaces were studied. To determine the optimum distances between the absorbing surface and the transparent glass cover, a physical model of a still was designed, constructed and tested indoor, using electric heating. The two vertical glass covers were made adjustable. It was found that the optimum distance was in the range of 50 to 60 mm, depending on the heat input to the absorbing surface.

A proptotype solar still having a flat absorbing plate of 1.86 sq.m was designed and constructed. The transparent glass covers were set at 55 mm from their corresponding absorbing surfaces. Raw water from a constant head tank was fed on to the top edge of the vertical absorbing plate made of black canvas. From out-door test results, the best orientation of the absorbing plate was found to be in the east-west direction where the annual average rate of distillation was about 2.0 litres per sq.m-day based upon the annual average horizontal global radiation of about 17 MJ/sq.m-day.

Prediction of the rates of distillation was attempted by using the modified Reynolds-Flow model. Deviations of the predicted values were found to be within 10% of the measured values.

Presented at Regional Seminar on Simulation & Design in Solar Energy Applications, UNESCO-KMITT-USAID, Bangkok, 8 - 11 May, 1984.

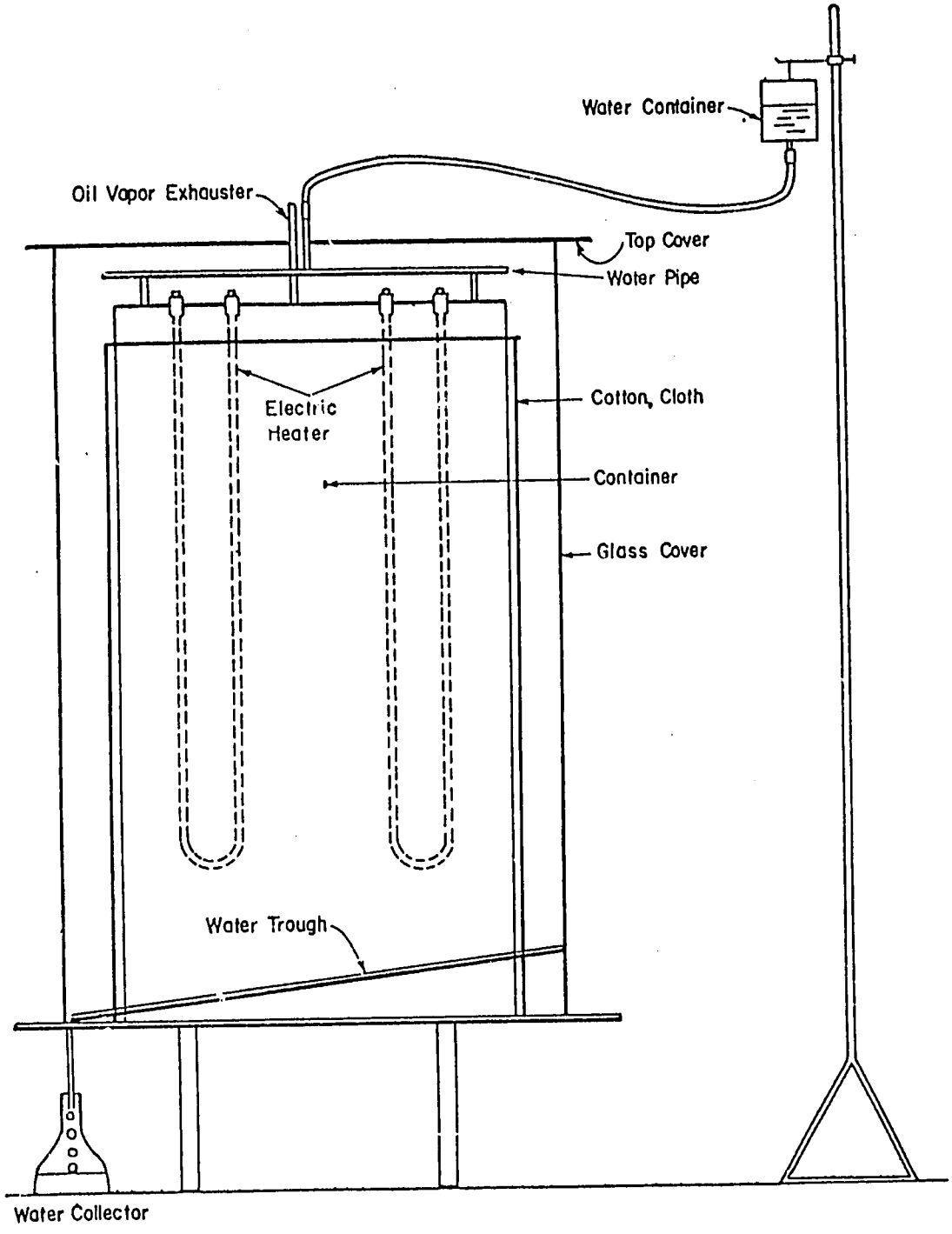

Fig. 1 Diagram of the Solar Still Model

1. INTRODUCTION

Solar stills having horizontal or tilted absorbing surfaces have been well investigated and implemented abroad and in Thailand[1] However, it is often difficult or not economically competitive to set up a large solar still in an urban area where the horizontal space required for installation is usually scarce or too expensive. In addition, the efficiency of a large solar still installed at ground-level can be considerably reduced by shadowing effects from other buildings. The short comings of a solar still having horizonal absorbing surface may be overcome by a solar still having vertical absorbing surfaces that is installed on the roof or parapet of a building.

In 1975, a solar still with a vertical cylindrical absorbing surface was first investigated in British West Indies[2]. The transparent cover was also in the form of a cylindrical tube. No analysis of the still was provided in the study. In Thailand, a solar still having a vertical cylindrical absorber of 0.1 m. diameter and 1 m. in height was studied in 1982. The cylindrical transparent cover was made of acrylic plastic of 0.3 m. diameter. It was found that at the annual average horizontal global radiation of 17 $MJ/m^2.d$, a daily distallation rate of 1.73 $l/m^2.d$ could be obtained. At a low global radiation, the distillation rate of the vertical surface still was higher than that of a norizontal-surface still with one plastic cover. Predictions of the distillation rates in the still by a simplified mass transfer theory was also attempted. Deviations of about 20 % were observed between the measured and predicted values.

2. MASS TRANSFER THEORY FOR SOLAR DISTILLATION

A simplified mass transfer theory was developed by D.B. Spalding[4] and later on advocated by W.M. Kays[5]. In this theory, the mass transfer flux is given by

$$\dot{m}'' = g^{+} \ln (1 + B) \qquad \text{.....(1)}$$

where B = driving force or mass transfer potential,

g^{+} = mass transfer conductance estimated from an appropriate heat transfer formula.

In a distillation process with only one transferred substance such as distillation of raw water in a solar still, the driving force, B may be estimated from

$$B = \frac{m_{H_2O,S} - m_{H_2O,G}}{1 - m_{H_2O,S}} \qquad \text{.....(2)}$$

where $m_{H_2O,S}$ = mass fraction of saturated water vapour close to the interface in the still,

$m_{H_2O,G}$ = mass fraction of water vapour at the bulk state.

A mass fraction of water vapour in moist air is related to the corresponding specific humidity, w by

$$m_{H_2O} = \frac{w}{1 + w} \qquad \text{.....(3)}$$

Close to the interface, the specific humidity of saturated water vapour, w_s can be determined from

$$w_s = 0.622 \frac{P_s}{P_{atm} - P_s} \qquad \text{.....(4)}$$

where P_s = saturated vapour pressure at the interface temperature, t_s,

P_{atm} = atmospheric pressure

At the bulk state in the solar still, the specific humidity, w_G may be estimated from the adiabatic saturation equation

$$w_G = \frac{w_w h_{fg,w} - C_p(t_G - t_w)}{h_{g,G} - h_{f,w}} \qquad \text{.....(5)}$$

where t_G = dry bulb temperature,

t_w = wet bulb temperature

$h_{fg,w}$ = latent heat of vaporization at t_w

$h_{g,G}$ = specific enthalpy of saturated vapour at t_G,

$h_{f,w}$ = specific enthalpy of saturated water at t_w,

w_w = specific humidity at t_w

= $0.622\ P_w/(P_{atm} - P_w)$

P_w = saturated vapour pressure at t_w,

In the case of a solar still with a vertical absorber, the mass transfer conductance, g^+ may be estimated from the equation for free convection from a vertical surface[6]

$$N_u = 0.59(Gr.Pr)^{0.25}$$

The above equation has to be modified to represent the mass transfer process into the following form,

$$N_u \equiv \frac{g^+ L\ Sc}{\mu} = 0.59(Gr.Sc)^{0.25} \quad .....(6)$$

where L = height of the vertical absorber,

μ = viscosity of moist air in the solar still,

Sc = Schmidt number of water vapour in the air,

Gr = Grashoff number,

= $L^3(t_G - t_S)\beta g/\nu^2$

β = volumetric coefficient of expansion of moist air

An experimental work on solar stills with horizontal absorbing surfaces and glass covers at Batelle Memorial Institute[7] suggested an empirical equation for the prediction of the distillation rate as

$$\dot{m}'' = [22.8 + 5.66 \times 10^{-10}(1.8\ t_w - 460)^{5.23}](t_w - t_g)\times 10^{-7}\ kg/m^2.s \quad .....(7)$$

where t_w = temperature of raw water in the still, C,

t_g = temperature of the glass cover, C.

3. TEST EQUIPMENT

A solar still model was constructed for indoor tests. The absorber of the model consisted of a piece of black cotton cloth wrapping around a hollow rectangular box of 0.96 m. high and 0.58 m. wide. The absorbing area on one side was therefore 0.557 m^2. The box was filled with heat transfer oil heated by two electric heaters, each of 750 W.

Transparent covers on both sides of the absorber were identical. The distances between the covers and absorbing surfaces were made adjustable from 20 - 120 mm. Two types of covers, namly 5 mm. glass sheets and 3 mm. acrylic plastic sheets were studied. Raw water was fed from a constant head tank onto the top edge of the absorber.

A prototype solar still with a vertical absorber was also designed and constructed for outdoor tests. The absorber was made of a piece of thick black cotton cloth of 0.98 m. wide and 1.90 m. high. The two transparent glass covers of 5 mm. in thickness were identically set at 0.55 mm. from the vertical absorbing surfaces. Raw water was fed from a constant head tank onto the top edge of the absorber. Distilled water was collected from the two troughs at the lower edges of the covers.

To study the mass transfer process in the still, chromel-alumel thermocouples were used for measuring the interface temperature on the absorber, dry and wet bulb temperatures in the still. The junction of the wet bulb thermocouple was wrapped with a piece of wet cotton cloth. Calibration of the wet bulb temperature in the still was made against the wet bulb temperature in the open air at the same dry bulb temperature.

4. TESTS AND RESULTS

The optimum gap between the glass cover and the absorbing surface of the still model was determined from the indoor tests by measuring distillation rates for different gap widths from 20 - 120 mm. at a constant heat input. Fig. 3 shows the variation of the distillation rates with the gap widths at various heat inputs from 180 - 400 W/m^2 of the absorber. The optimum gap appears to vary from about 40 - 60 mm.

Outdoor tests were conducted on the prototype solar still with the absorber facing East-West, North-South and 45°. Results in Fig. 4 indicate that with the absorber facing East-West, the solar still produced higher daily distillation rates than the still with other absorber orientations. At the annual average horizontal global radiation of 17 $MJ/m^2.d$, the daily distillation rates for the East-West and Norht-South orientations are expected to be 2.0 and 1.25 $l/m^2.d$ respectively.

A comparison of the vertical-surface solar still with basin - type solar stills in fig.5 shows that at the annual average horizontal global radiation of 4.7 $kWh/m^2.d$, the daily distillation rate of the vertical surface still facing East-West direction is comparable to that of the basin-type still with one glass cover and 15% higher than that of the basin-type-still with one acrylic plastic cover.

In fig.6, measured and predicted rates of distillation of various types of solar stills, viz the vertical-surface still with glass covers and two plastic-cover stills having horizontal and vertical absorbers[3], are compared. The predicted values based upon the simplified masstransfer theory exhibit deviations from the measured values by about 10%. On the other hand, the emperical formula used by Cooper[7] does not seem to be applicable to solar stills operating in Thailand.

5. CONCLUSIONS

At the annual average horizontal global radiation of 17 $MJ/m^2.d$, the highest daily distillation rate of 2.0 $l/m^2.d$ was obtained when the vertical-surface solar still had its glass covers set at the optimum gaps of 55 mm. from the absorbing surfaces with the East-West orientation. Relatively poor distillation rates were obtained when the absorbing surfaces with the same gaps from the covers faced the North-South directions. In this case, wider gaps between the covers and absorber may permit more radiation to reach the absorber through the top cover, especially around noon. A further study on this topic is recommended.

The simplified mass transfer theory seems to be fairly accurate for the prediction of the instantaneous distillation rate at a constant radiation intensity around noon. Extension of the theory to cover the prediction of the daily distillation rate with varying radiation intensities is suggested.

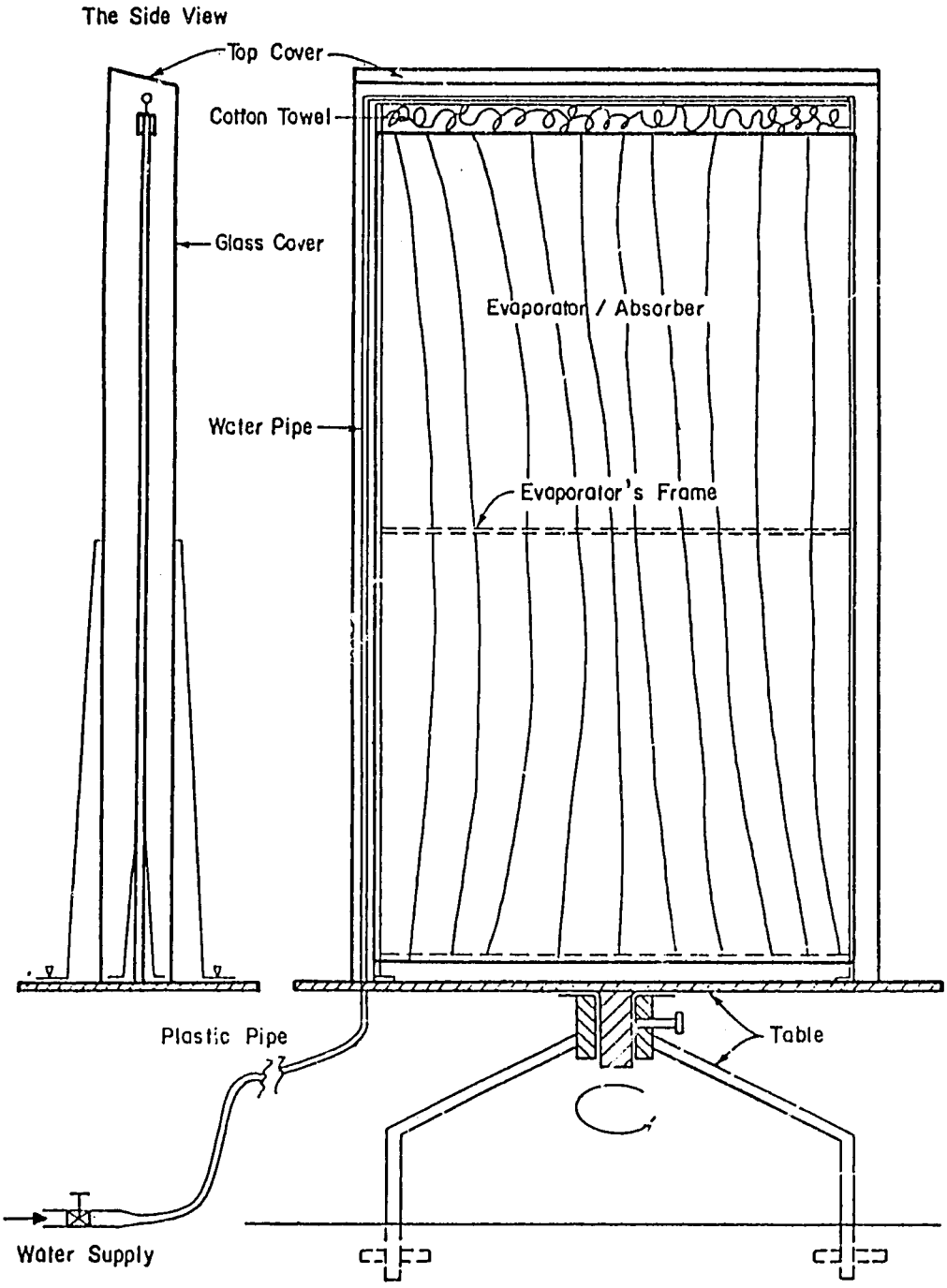

Fig. 2 Diagram of the Solar Still Prototype

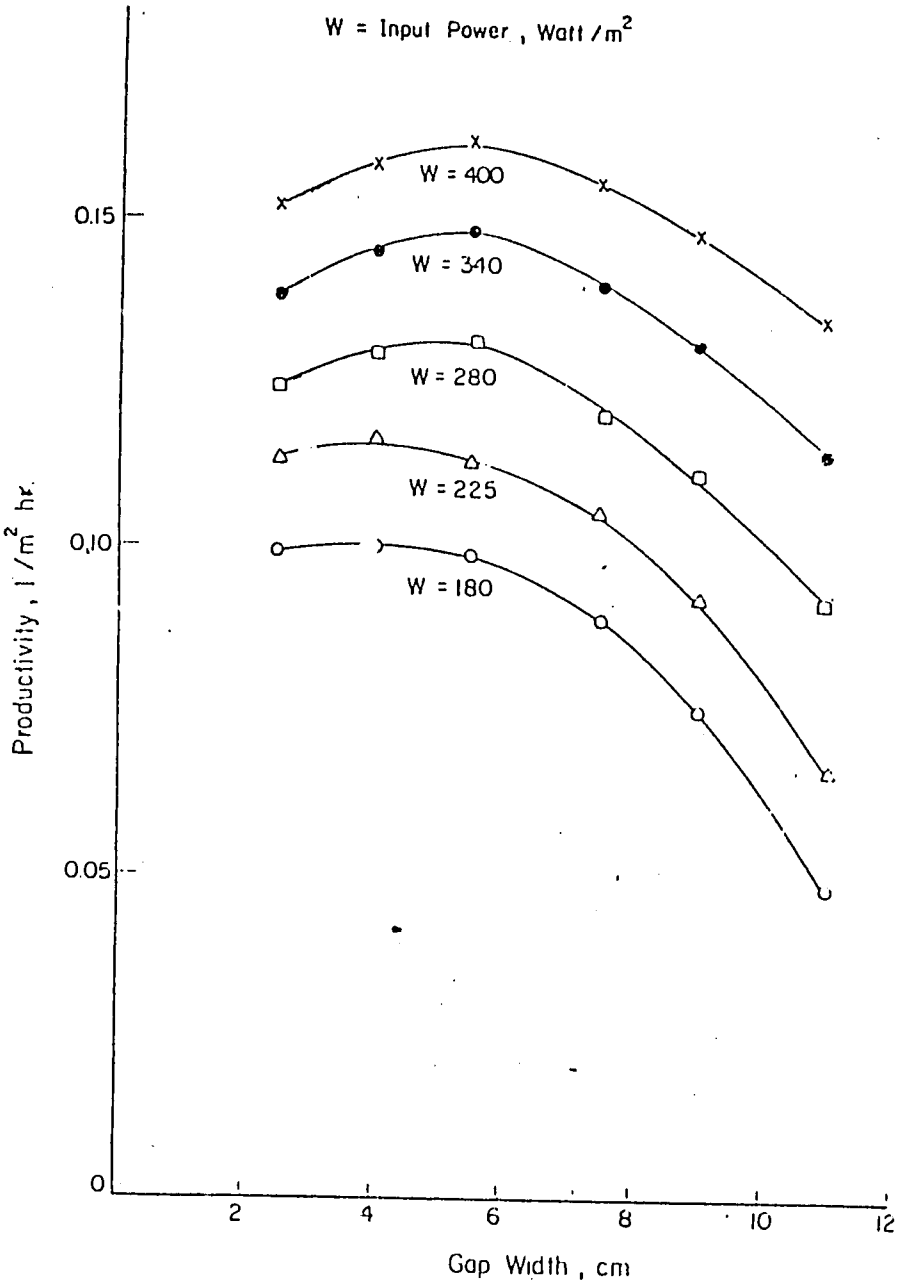

Fig. 3 Productivity vs Gap Width with Constant Input Power for the Still Model with Glass Covers

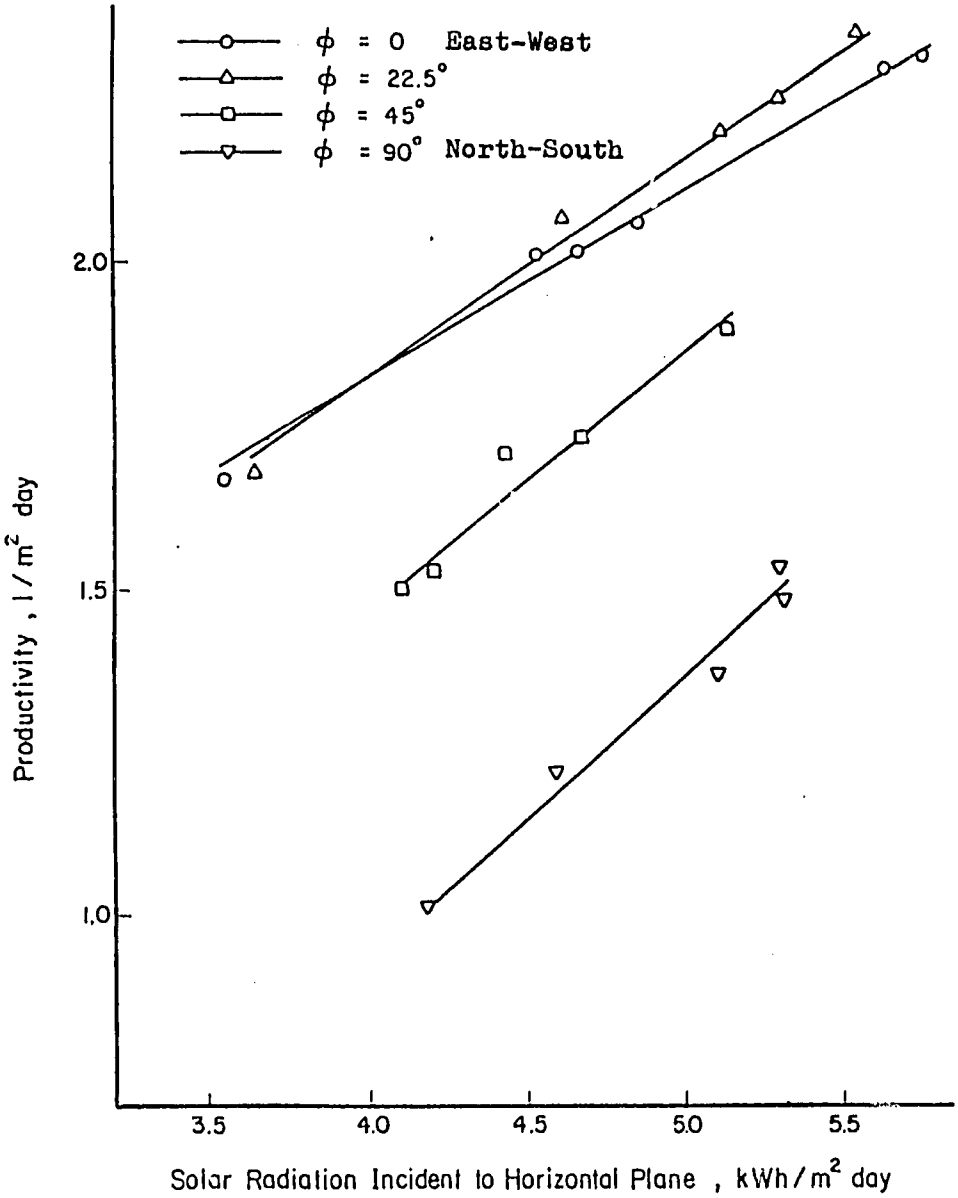

Fig. 4 Variation of Productivity with Solar Total Radiation Incident to Horizontal Plane

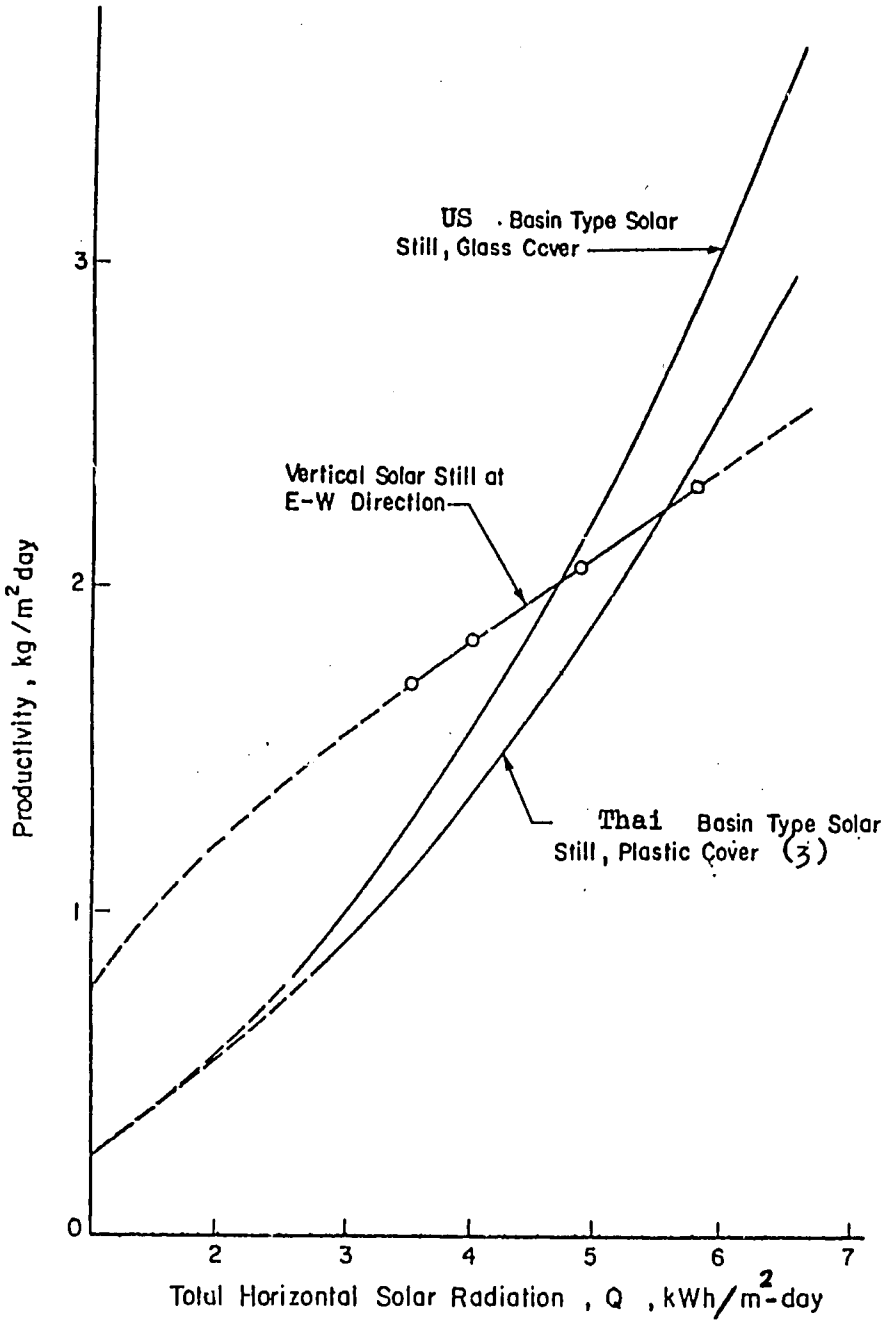

Fig. 5 Comparison of Productivities of the Vertical Solar Still and Basin-Type Solar Stills

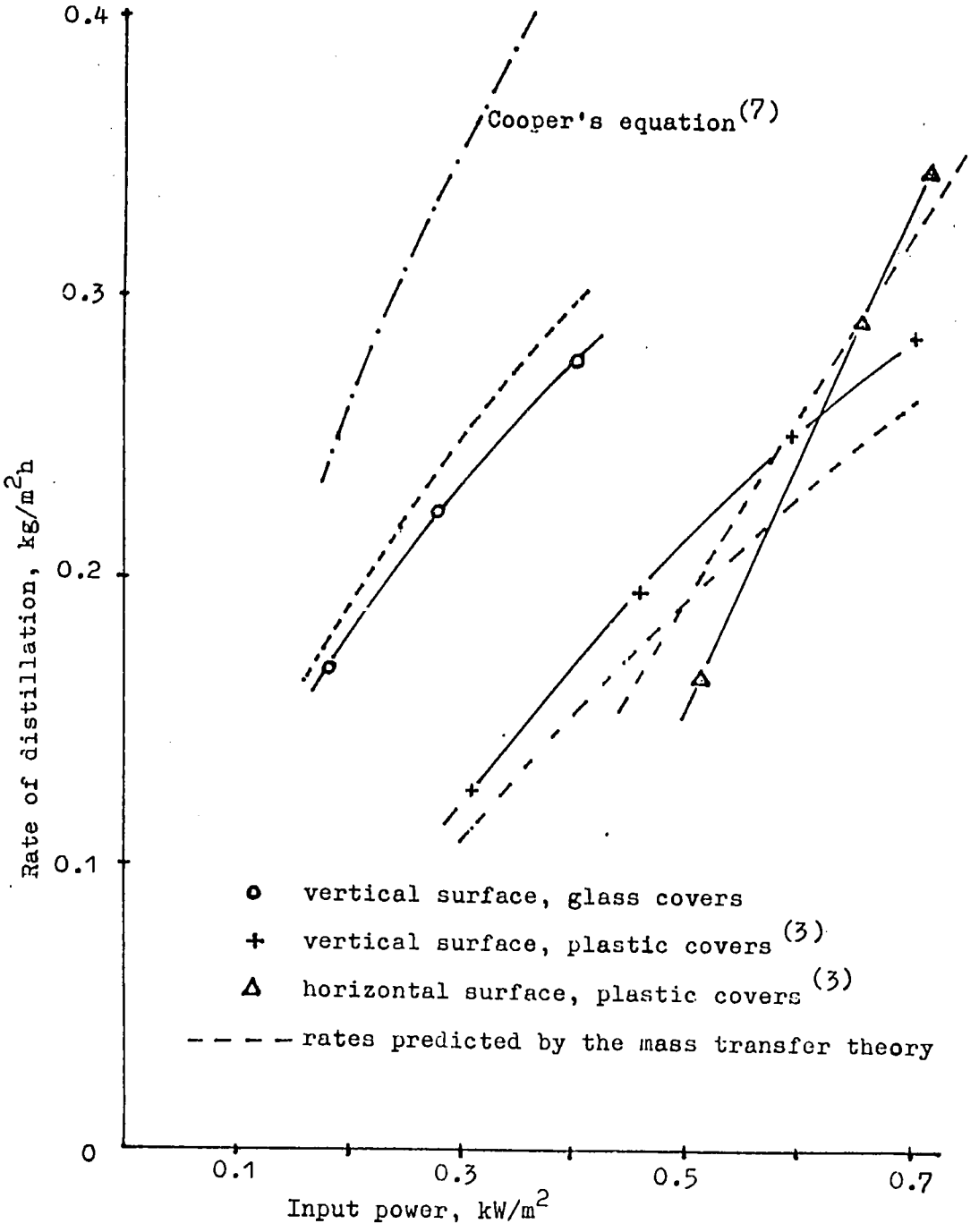

Fig. 6 Comparison between measured and predicted rates of distillation in different solar stills.

REFERENCES

1. Wibulswas P. & Pothihom A., "Economic analyses of solar water heater and solar stills in Thailand," Solar Energy : International Progress, Pergamon Press, Oxford, 1980.

2. Coffey J.P., "Vertical solar distillation", Solar Energy, Vol.17, 1975, pp. 375 - 378.

3. Wibulswas, P., et al, "Development of solar stills having acrylic plastic covers in Thailand", Alternative Energy Sources IV, Ann Arbor Science, Michigan, 1982, pp. 385 - 394.

4. Spalding D.B., "Convective Mass Transfer", Arnold, London, 1963.

5. Kays W.M. & Crawford M.E., "Convective Heat & Mass Transfer", Mc Graw-Hill, New York, 1980.

6. Bayley, Owen & Turner, "Heat Transfer", Nelson, London, 1972.

7. Cooper P.I., et al, R & D Progress Report No.190, Office of Saline Water, Batelle Memorial Institute, May, 1966.