PN-AAS-519

Best available copy -- pages 160 - 176 missing

PN-AAZ 519
ISN: 39486

Chulalongkorn University
Phya Thai Road, Bangkok 10500 Thailand

BIOMASS GASIFICATION IN THAILAND

Submitted to the
National Energy Administration
Ministry of Science, Technology and Energy

Under the
Renewable Nonconventional Energy Project
Royal Thai Government
U.S. Agency for International Development

ACKNOWLEDGEMENTS

The Biomass Gasification Component of the Renewable Non-conventional Energy Project was made possible through a grant from the United States Agency for International Development and counterpart funding by the Royal Thai Government through the Department of Technical and Economic Cooperation and the National Energy Administration. The Faculty of Engineering, Chulalongkorn University, was invited by the National Energy Administration, acting as Project Manager, to undertake the Biomass Gasification Component.

As Component Leader of the Biomass Gasification Component and on behalf of Chulalongkorn University, I would like to acknowledge the United States Agency for International Development (USAID) in providing the major part of the funding for this component, the Department of Technical and Economic Cooperation (DTEC) for its assistance in overseas procurement of equipment and for arranging participant training, and the National Energy Administration for managing the project.

I would like to express my appreciation to the following persons who played a special role in this project; Dr. Naksitte Coovattanachai, Dr. Phol Sagethong and Dr. Norkhun Sitthiphong for having devoted their energies and their knowledge to this project; to Mr. Adul Pasuraphan and Mr. Manat Boonmee whose skills at building gasifiers are now undisputed; Miss Rangsima Pipatpoka, Miss Chuenchit Umaporn and Mrs. Surudee Lorlertwit whose devotion to the project and unending patience as secretaries made this project operate; the graduate students who played a role in helping the project along the way; and finally to Dr. Albrecht Kaupp, Professor John R. Goss, and Dr. Thomas B. Reed who taught me what gasification was all about.

Dr.Woraphat Arthayukti
Assistant Professor
Chulalongkorn University
Component Leader of Biomass Gasification

CONTENTS

Page

Executive Summary 9

List of Tables 13

List of Figures 15

Chapter 1 INTRODUCTION

A. The Conversion of Biomass into a Gaseous Fuel 21

B. The Potential Utilization of Producer Gas 21

C. The Energy Situation in Thailand 22

D. The Interest in Biomass Gasification 22

E. Historical Background of Biomass Gasification 23

F. Objective and Scope to the Present Biomass Gasification Project 25

Chapter 2 REVIEW OF LITERATURE AND INFORMATION OBTAINED

A. Previous Studies in Thailand 29

B. Gasification Experience Elsewhere 30

Chapter 3 PLANNING AND DESIGN OF THE PROJECT

A. Formulation of the Project 39

B. Development Planning of the Biomass Gasification Group in Chulalongkorn University 41

C. The 500 We Gasifier System Planned 42

D. The 7 HP Gasifier System Planned 43

E. The 16 HP Gasifier System Planned 43

F. The 25 kWe Gasifier System Planned 43

G. The Direct Fire Fluidized Bed Gasifier System Planned ... 44

H. Final Selections of Gasifier Units for Each System 44

Chapter 4 EXPERIMENTAL TECHNIQUES AND PROCEDURES

A. The 500 We Gasifier (Unit Number 1) 61

B. The 500 We Gasifier (Unit Number 2) 62

C. The 500 We Gasifier (Unit Number 3) 62

D. The 500 We Gasifier (Unit Number 4) 63

E. The 7 HP Gasifier (Unit Number 1) 63

F. The 7 HP Gasifier (Unit Number 2) 64

G. The 7 HP Gasifier (Unit Number 3) 64

H. The 16 HP Gasifier (Unit Number 1 and 2) 64

CONTENTS (continued)

Page

I. The 25 kWe Gasifier 65

J. The Fluidized Bed Gasifier (Units Number 1 and 2) 65

Chapter 5 PRESENTATION AND ANALYSIS OF RESULTS

A. The 500 We Gasifier System 77

B. The 7 HP Gasifier System 79

C. The 16 HP Gasifier System 80

D. The 25 kW Gasifier System 81

E. The Fluidized Bed System 82

F. The Biomass Gasification R & D Unit in Chulalongkorn University 82

G. Comments on Gasifier Implementation Strategies 83

Chapter 6 CONCLUSIONS 87

Chapter 7 RECOMMENDATIONS 91

Annexes

Annex 1 Biomass Gasification Work in the Philippines 95

Annex 2 Biomass Gasification Work in the U.S.A. 101

Annex 3 Biomass Gasification Work in Japan 105

Annex 4 Biomass Gasification Work in France 109

Annex 5 Biomass Gasification Work in Brazil 113

Annex 6 500 We Gasifier (Unit Number 1) 117

Annex 7 500 We Gasifier (Unit Number 2) 137

Annex 8 500 We Gasifier (Unit Number 3) 149

Annex 9 500 We Gasifier (Unit Number 4) 155

Annex 10 7 HP Gasifier (Unit Number 1) 161

Annex 11 7 HP Gasifier (Unit Number 2) 173

Annex 12 7 HP Gasifier (Unit Number 3) 189

Annex 13 25 kWe Gasifier 197

Annex 14 The Fluidized Bed Gasifier (Unit Number 1).....219

Annex 15 The Fluidized Bed Gasifier (Unit Number 2).....229

Annex 16 The 16 HP Gasifier (Units Number 1 and 2) 261

Annex 17 Designs of Charcoal Gasifier Cleaning Systems Used in this Project 267

References 277

EXECUTIVE SUMMARY

The general objective of the Biomass Gasification Component of the Renewable Non-conventional Energy Project was to develop a number of gasification systems and based on testing and/or implementation programs, recommend a set of proposals for the development and/or dissemination of Biomass Gasification technology in Thailand.

Under the project twelve gasification units were planned starting from a series of microgasifiers producing five hundred watts of electricity to gasifiers producing twenty-five kilowatts of electricity, and pilot scale fluidized bed systems of sizes below one third of a million Btu per hour. At the completion of the project these twelve gasification units were at various levels of construction and testing. One unit had gone through a full implementation program in a rural site.

The main conclusions of the study indicate a reasonable amount of confidence in the development of small charcoal gasifiers and confidence in the prospect of disseminating these units; that wood gasifiers need be technically optimized before implementation; that fixed bed crop residue gasification show prospects of becoming a future gasifier raw material; and that fluidized bed gasifiers have been shown to be able to gasify rice husk.

The recommendations based on the study state that small charcoal gasifiers be disseminated; that additional development towards full operational reliability be done on wood gasifiers and that future wood gasification programs include wood production programs; that fixed bed crop residue gasification be undertaken at the research and development level, that fluidized bed crop residue gasification be implemented on an economic scale, using both local and foreign expertise; that importance be attached to fixed bed direct fire gasifiers for drying applications; and finally that gasification development, implementation, and dissemination work be coordinated by a center with various R & D groups supporting this center as resource persons.

CONCLUSIONS

The following conclusions may be presented based on the work undertaken by the Biomass Gasification Component in the development of several gasifier systems.

Charcoal Gasifiers

Charcoal gasifiers producing half a kilowatt of electricity have been developed and implemented successfully. Gasifiers producing in the range of seven horsepower have also been developed and tested successfully but not yet implemented.

Crop Residue Gasifiers

Research into novel fixed bed downdraft gasifiers using corn cob pieces has shown the possibility of developing a simple geometry gasifier that may eventually be able to gasify a variety of low ash content and high ash content shredded crop residues.

Wood Gasifiers

Choke plate downdraft wood gasifiers developed and tested in this project indicate that such a gasifier design has almost reached the point of being able to produce a comparatively tar-free gas. Furthermore such a gas can be cooled and cleaned in a packed bed water scrubber. However, both reactors and scrubber need to be further optimized in the laboratory.

Fluidized Bed Gasifiers

The fluidized bed gasifiers of up to about 20 kw, designed, built and operated in this project, indicate that rice husk can be gasified, although data from both pilot units built indicate that the units have not been fully optimized. The complexity of operating such systems means that a unit of less than half a megawatt,for example, would probably be uneconomical and the development of such a large fluidized bed gasifier would require hardware inputs from abroad and use of both foreign and local expertise.

RECOMMENDATIONS

The recommendations that the Biomass Gasification Component wishes to make from the project results and the experience gained during the project may be presented as follows:

The Dissemination of Small Charcoal Gasifiers

Based firstly on the development of microgasifier systems from sizes ranging from 500 watts of electricity to systems producing in the neighborhood of 7 hp of shaftwork, and with some limited implementation experience, and based secondly on the appraisal of low negative impact on wood resource depletion in certain areas of rural Thailand, it is the recommendation of the component leader that a dissemination program be undertaken.

One dissemination strategy that may be undertaken at low cost is the training of villagers in the construction of charcoal gasifiers either in Bangkok or at the rural energy centers.

The Development of Wood Gasifiers

The various phases of wood gasifier development should include the following items:

- Laboratory research and development of a wood gasifier system to obtain optimized systems should be encouraged including long term testing and implementation.

- Since wood gasifiers are generally designed for applications which generate shaft power up to several hundred horsepower (also utilizing up to several hundred kilograms of wood chips per hour thus creating an environmental problem), it is very much necessary to tie in a wood production and preparation system with each wood gasifier implementation and dissemination program.

- In order to minimize still further tar production from a wood gasifier, it is very interesting to study the use of semi- carbonized wood as a wood gasifier fuel. Likewise, to increase general conversion efficiency of charcoal gasifiers, it is very interesting to study the use of semi-carbonized wood as a charcoal gasifier fuel.

The Development of Fixed Bed Crop Residue Gasification

Due to the non-use of Thailand's agricultural crop residues, it is important to promote biomass conversion technology that would enable farmers to gain additional income from such wastes and at the same time convert this biomass into useful energy. The gasification of crop residues in fixed bed gasifiers offers some prospects of successful development and research and development in that direction should be promoted.

The Development of Fixed Bed Direct Fire Gasifier Systems

One of the items of development not specified in the Biomass

Gasification Component was the development of a wood or crop residue fixed bed, downdraft gasifier for direct fire applications. Such a concept not yet engineered in Thailand would seem to have wide use in small scale wood drying, agricultural crop drying, tobacco leaves drying, etc. The technology would appear to be less difficult then producing an engine grade quality gas as we would have less worries about tars which do burn in direct fire burners. Such a development direction should be looked at and worked on for subsequent work.

The Development of Crop Residues Fluidized Bed Gasifiers

Based on the results of this project it can be said that the concept of rice husk gasification is feasible. As a recommendation from this project the next step should be to build a small but economical scale gasifier (it is proposed that not less than half a megawatt thermal be considered) and to use under-utilized crop residues in a rural factory to test the economic viability of the system.

Proposal for a Gasification Technology Development Center

Based on the Biomass Gasification Component's experience acquired during the project, on the contacts with Biomass Gasification development teams in Thailand and on perceived future prospects of biomass gasification dissemination in Thailand, one recommendation proposed here is the creation of a central gasifier development facility. This center would coordinate research and development work through subcontracts to existing R & D teams and be solely responsible for overseeing planning and implementation programs. Failure to centralize activities relating to biomass gasification will result in duplication of efforts and much slower than optimal development of the technology.

LIST OF TABLES

Table	Title	Page
1.1	Economic Comparison of Gasifier	97
6.1	System Parameters for a Small Charcoal Producer Gas Unit and a Gasoline Engine Generator Unit	123
13.1	Diesel Engine Performance With and Without Supplement Gas at Constant Speed	201
15.1	Gas Composition and Caloric Values of Rice Husk and Sawdust	234
15.2	Operating Conditions and Results of One-stage Fluidized Bed Gasification of Rice Husks	240
15.3	Operation Conditions and Results of Double-stage Fluidized Bed Gasification of Rice Husks	241
15.4	Data and Results of Engine Performance Using Producer Gas	243
15.5	Data and Results of Engine Performance Using Regular Gasoline	243
15.6	Assumptions Used in the Economic Analysis	248
15.7	Breakdown of the Annual Costs for the Gasifier and the Diesel System	248

LIST OF FIGURES

Figure	Title	Page
3.1	500 We Gasifier (Unit Number 1) Downdraft Charcoal Gasifier	48
3.2	500 We Gasifier (Unit Number 2) Updraft Charcoal Gasifier	49
3.3	500 We Gasifier (Unit Number 3) Downdraft Charcoal Gasifier	49
3.4	500 We Gasifier (Unit Number 4) Downdraft Charcoal Gasifier	50
3.5	7 hp Gasifier (Unit Number 1) Crop Residue Gasifier, Experimental Unit	51
3.6	7 hp Gasifier (Unit Number 2) Downdraft Charcoal Gasifier	52
3.7	7 hp Gasifier (Unit Number 3) Downdraft Charcoal Gasifier	53
3.8	16 hp Gasifier (Unit Numbers 1 and 2) Downdraft Wood Gasifiers	54
3.9	25 kWe Gasifier - Downdraft Wood/Corn Cob Gasifier	55
3.10	Fludized Bed Gasifier (Unit Number 1)	56
3.11	Fludized Bed Gasifier (Unit Number 2)	57
4.1	500 We Gasifier (Unit Number 1) Downdraft Charcoal Gasifier	66
4.2	500 We Gasifier (Unit Number 2) Updraft Charcoal Gasifier	67
4.3	500 We Gasifier (Unit Number 4), Downdraft, Charcoal, Central Tuyere Design	68
4.4	7 hp Gasifier (Unit Number 1) Downdraft, No Throat Design	68
4.5	7 hp Charcoal Downdraft Gasifier (Unit Number 2) Producing 2 kWe Electricity	69
4.6	The 16 hp Gasifier (Unit Number 2) under construction	70
4.7	25 kWe Gasifier, Downdraft Wood/Corn Cob Gasifier	71
4.8	Fluidized Bed Gasifier (Unit Number 1) Rice Husk Fluidized Bed Gasifier	72
4.9	Fluidized Bed Gasifier (Unit Number 2) Rice Husk Fluidized Bed Gasifier	73
A6-1	500 We Charcoal Gasifier (Unit Number 1)	124
A6-2	Sketch of the Cyclones	126
A6-3	Sketch of the Gas Cooler	127
A6-4	Fine Particles Cloth Filter	128

Preceding Page Blank

LIST OF FIGURES (continued)

Figures	Title	Page
A6-5	Main Air-Gas Mixing Valve	129
A6-6	Secondary Air-Gas Mixing Valve	130
A6-7	500 We Gasifier (Unit Number 1), Downdraft, Charcoal Gasifier at the Prince of Songkhla University and at the Implementation Site, Ban Yang Ngam, Songkhal Province	131
A6-8	500 We Gasifier (Unit Number 1) Downdraft Charcoal Gasifier at Songkhla University and on site at Ban Yang Ngam, Songkhla Province	132
A6-9	500 We Gasifier (Unit Number 1) Downdraft Charcoal Gasifier: The Load Control Unit; the Operator Tuning in the Main Air Inlet after Start-up of the System; and a top view of the Central Tuyere	133
A7-1	500 We Gasifier (Unit Number 2) Updraft Charcoal Gasifier	143
A7-2	500 We Gasifier (Unit Number 2) Updraft Charcoal Gasifier	145
A8-1	500 We Gasifier (Unit Number 3)	152
A9-1	500 We Gasifier (Unit Number 4)	157
A11-1	7 HP Gasifier (Unit Number 2), Overall System	177
A11-2	7 HP Gasifier (Unit Number 2), Reactor	178
A11-3	7 HP Gasifier (Unit Number 2), Tuyere and Grate Systems	179
A11-4	7 HP Gasifier (Unit Number 2), Cyclones and Coarse Filter Systems	180
A11-5	7 HP Gasifier (Unit Number 1), Cooler and Fine Filter Systems	181
A11-6	Details of 7 HP Gasifier (Unit Number 2)	183
A11-7	Details of 7 HP Gasifier (Unit Number 2)	184
A11-8	Details of 7 HP Gasifier (Unit Number 2)	185
A12-1	7 HP Gasifier (Unit Number 3), Reactor	192
A12-2	Experimental Data for 7 HP Gasifier (Unit Number 3)	193
A13-1	25 kWe Gasifier (original design)	202
A13-2	25 kWe Gasifier (original design)	203
A13-3	35 kWe Gasifier, Water Scrubber	204
A13-4	The Tuyeres; Starting the Gasifier; the entire system; and starting the Gasifier	205
A13-5	25 kWe Gasifier: Gas Preheat System; Wood Chips Tested; Air Mixing Valve; and Gas Valve Control System	206
A13-6	25 kWe Gasifier: Scrubbing Water Recirculation; Starting-up the Gasifier; and the Grate Rotating Mechanism	207

LIST OF FIGURES (continued)

Figures	Title	Page
A13-7	25 kWe Gasifier (final design)	208
A13-8	25 kWe Gasifier (final design)	209
A13-9	25 kWe Gasifier (final design)	210
A13-10	25 kWe Gasifier (final design)	211
A13-11	Diesel Engine Test Performance at Constant Speed	212
A13-12	Diesel Engine Test Performance at Constant Speed	213
A13-13	Diesel Engine Test Performance at Constant Speed	214
A13-14	Diesel Engine Test Performance at Constant Speed	215
A14-1	Fluidized Bed Gasifier (Unit Number 1)	222
A14-2	Fluidized Bed Gasifier (Unit Number 1), Combustor Unit	223
A14-3	Fluidized Bed Gasifier (Unit Number 1), Gasifier Unit	224
A14-4	Views of the Fluidized Bed Gasifier (Unit Number 1), during construction	225
A15-1	Schematic Diagrams for a Fixed Bed and a Fluidized Bed	250
A15-2	Schematic Diagram of a Fluidized Bed Gasifier	251
A15-3	Schematic Diagram of a Two-stage Fluidized Bed Gasifier	252
A15-4	The Concentrations of CO at Various Air Flow Rates	253
A15-5	The Concentrations of CO_2 at Various Air Flow Rates	254
A15-6	Engine Performance Curves	255
A15-7	The Fluidized Bed Gasifier (Unit Number 2): View of Overall Unit; and View of Lower Feeding System	257
A16-1	16 HP Gasifier (Units Number 1 and 2) Downdraft Wood Chips Fuel	263
A17-1	Cyclone	270
A17-2	Stone Impingement Filters of 3 Sizes	271
A17-3	Air Cooler	272
A17-4	Cold Fabric Filter	273
A17-5	Final Filter (bottom) and Cold Fabric Filter (top)	274

Preceding Page Blank

Chapter 1

Introduction

INTRODUCTION

This report covers the design, construction and testing of twelve gasification units. It will evaluate each gasifier as to its economic and technological viability for use in Thailand and other developing countries. This chapter will discuss the historical background of biomass gasification, as well as present-day need for and implementation of such programs.

A. THE CONVERSION OF BIOMASS INTO A GASEOUS FUEL

Wood and other biomass materials may be converted into a gaseous fuel that can be burned or ignited in an internal combustion engine. This gaseous fuel which generally has a third or a fourth of the energy content of natural gas is commonly called "producer gas".

The process of conversion of solid biomass (with a general ash free formula $CH_{1.4}O_6$) into a producer gas is a gasification process classified as a thermochemical conversion process. Thermochemical conversion processes refer to conversion processes which use heat. Pyrolysis is another thermochemical conversion process which differs from gasification by the fact that pyrolysis processes produce three products: a solid charcoal, a producer gas, and a liquid, whereas a gasification process which occurs at a higher temperature yields mainly a gas. The producer gas thereby obtained will contain carbon monoxide (CO), hydrogen (H_2), some carbon dioxide (CO_2), some methane (CH_4) and traces of oxygen and higher hydrocarbons. As air is normally used as an oxidizing agent, then one obtains a high concentration of nitrogen (N_2) in the producer gas.

The theoretical efficiency of conversion of wood into a producer gas using air gasification is 85%. The loss results from heat losses from the reactor (or gasifier), and losses as sensible heat in the gas. The efficiency is the ratio of the energy content of the cooled gas to the energy content of the bone dry wood. The theoretical efficiency of conversion of pure charcoal into a producer gas is 72% (Vaing, 1983).

B. THE POTENTIAL UTILIZATION OF PRODUCER GAS

Past utilizations of producer gas have included home heating and cooking gas generated from coal (the city of Paris used such a gas many decades ago) and producer gas run vehicles throughout the world during the Second World War using wood and charcoal.

Today we are witnessing a re-awakening of interest in producer gas systems for applications as renewable energy systems throughout the world. The systems being studied are gasification of biomass for process heat in both developed and developing countries, and applications for rural electricity, for transportation and for water pumping mostly in developing countries. However, the successes of implementation of such biomass

Previous Page Blank

gasification systems have been less than satisfactory throughout the world from the end of the Second World War up to the present.

C. THE ENERGY SITUATION IN THAILAND

The foreign currency used to purchase petroleum products in 1983 amounted to some 60,000 million baht and equalled the balance of trade deficit Thailand suffered in that year. The imported petroleum product was equivalent to 12 million MTOE (Metric tons of oil equivalent). In the next few years the hope of seriously diminishing the petroleum import bill rests with the discovery and exploitation of national petroleum resources in addition to the existing natural gas and oil fields in Thailand. Further exploitation of locally available lignite is also a key factor in diminishing the cost of imported energy. These newly-found traditional energy sources will reduce demand for fuel oils used to generate electricity and used as process heat, for imported LPG used in households and in vehicles, and for gasoline used in vehicles. These traditional energy sources, however, neither reduce demand for diesel oil, kerosene, fuel oil for rural industry, nor reduce the retail price of such fuels.

Renewable sources of energy are expected to play a role in reducing this importation of petroleum products by replacing petroleum fuels in existing energy systems and by being increasingly used in future energy systems. However, the renewable sources of energy will inevitably play a smaller role in the replacement of imported energy when compared to locally available oil, gas and lignite resources. Among renewable sources of energy such as wind, solar, geothermal, and biomass energy, the last item has the theoretical potential of producing every year far greater energy than the 12 million MTOE that Thailand imported in 1983. However, due to social, economic, cultural, technological and practical constraints, only a minute fraction of all available biomass energy is used efficiently.

The biomass resource infrastructure includes mangrove wood, rubber wood, and other naturally growing wood that is sold as working wood or that is carbonized into charcoal and sold mostly as cooking charcoal. The entire sugar industry is fueled by direct combustion of the sugar mill bagasse, and the large rice mills are fueled by direct combustion of rice husk. These are the major bio-energy systems which have an impact on a national scale. On the other hand, idle land is not being used for planting trees and most crop residues except both residues mentioned above are not being used as an energy resource base.

D. THE INTEREST IN BIOMASS GASIFICATION

Biomass, whether wood or crop residues, can be used in combustors for process heat. This is being done in Thailand for bagasse and for rice husk to a certain extent. This is being done in at least one large sawmill in Sriraja, Cholburi Province (Srimaharaja Company, Personal Communication). Other biomass combustion systems are also believed to exist. The major cooking fuels in rural Thailand are wood and charcoal and both are sold as commodities. The estimated 1980 Thailand consumption of fuelwood was 13.7 million cubic meters and the consumption of charcoal was 0.79 million cubic meters (Thailand Nonconventional Renewable Energy Project, 1983). A large source of wood being forest lands, the above report forecasts that if

forest encroachment continues at the present rate all forests will be destroyed within 26 years.

Besides the above mentioned biomass materials which are being used as a biomass resource infrastructure, there exist a spectrum of crop residues and other miscellaneous biomass materials which have vast energy content and which are being largely unused. For example the statistics of the 1981-1982 crop permitted the calculation of the energy content of the following crop residues: rice husk, rice straw, cassava stem, maize stem, sugar cane tops, cotton stalks and coconut shells. The calculated heat content was 9.69 million MTOE (Arthayukti, Unpublished communication). However, it must be emphasized that the technology for collecting, processing, cubing, and utilizing these biomass materials have not been fully developed and it does not seem that they will be in the near future. This is also true for crop residue gasification technology for more effort must still be devoted to develop a reliable crop residue gasifier that can be marketed.

With the existing biomass infrastructure based on wood and charcoal on one hand and based on all the other biomass materials on the other hand, the National Energy Administration within the Ministry of Science, Technology and Energy has felt the need to study the possibilities of setting up rural energy systems based on gasification of biomass. The purpose of such studies are to reduce demand for traditional liquid fuels: kerosene, diesel, gasoline, fuel oil, by substituting a renewable energy source such as biomass. This biomass gasification component of the renewable Nonconventional Energy Project is intended to study this question of the possibilities of setting up rural energy systems based on gasification of biomass for NEA.

E. HISTORICAL BACKGROUND OF BIOMASS GASIFICATION

Extent of Adoption of Gasifiers

The period during which gasifiers earned notoriety was between the late twenties to the latter part of the Forties, mostly in Europe but with some reported applications in Asia and elsewhere. In Thailand today most of our senior citizens still remember the charcoal run buses used during the war years. Two countries where hundreds of thousands of gasifiers were built and used for transportation vehicles were Germany and Sweden. The extent of adoption of gasifiers in Sweden was linked to unavailability of gasoline, and the number of producer gas vehicles mushroomed from dozens of units to thousands of units in only months. In Germany the use of gasifier-run vehicles was a strategic necessity due to a shortage of oil fields in Germany. Elsewhere in Europe and in other foreign countries gasifiers were also used for vehicles (Goss, et al, 1983; Barnard and Timberlake, 1983). The author remembers the mention of a rice husk gasifier used as prime mover in an Italian rice mill. Generally, the gasifiers built during those years where primarily used for vehicles. There was no reported use of gasifiers for electricity generation in Europe.

Social Acceptance of Gasifiers

Reading through the literature mentioned above the author felt that not all operators of gasifiers remembered them with fondness. It is a

certainty that were gasoline available in those times, the users would have been very glad to throw away the cumbersome gasifiers and switch back to gasoline. However, during the war years there was no gasoline or very little and the necessity for people to move around was itself a prime mover for the temporary adoption of gasifiers. Responding to a question as to why he did not remember his producer gas vehicle with great joy, an Italian gentlemen recently responded (Bonino, Personal Communication) by saying that he still remembers getting up at four in the morning to open up the engine and clean the tars so that the vehicle would be ready to go in the morning. However, this Italian gentleman conceded that gasifiers had, in fact, made transportation possible when it was acutely needed and that gasifiers had played their role very well in a time of need. However, after the Second World War, in the latter part of the forties, as the availability of gasoline was no longer a problem, all the gasifiers became obsolete and were discarded to the point that no gasifier relic from that era can be found today.

Gasifier Raw Materials

The producer gas vehicles of that era used wood and charcoal as fuels. Size of the wood chips was important in gasification. The wartime Swedish gasifiers, for example, could use billets of up to 9 cm in diameter and 7.5 cm long (Seri, 1979). In contrast, modern Swedish designs now require small wood chips with a maximum dimension of just a few centimetres. A problem with woodchips is lack of size uniformity, causing channelling in the generator and poor gas quality. From the World War experience charcoal had been proved a more reliable and trouble-free fuel. However one of the problems concerning the distribution of charcoal was that it would easily break into charcoal fines unsuitable for gasifier operation. To overcome these problems, charcoal briquettes were also produced and occupied only a third of the space required by ordinary charcoal.

Gasifier Designs

The gasifier designs of that era numbered in the hundreds and were either updraft, downdraft or crossdraft. The appendix has a section devoted to various gasifier designs. Almost all the gasifiers were of the downdraft or crossdraft type. Crossdraft gasifiers because of faster response to loads were generally used for vehicles that were used for unsteady loads such as city traffic or uphill, downhill type of driving, whereas downdraft gasifiers were best used on vehicles meant for steady loads such as trucks used on highways. A design detail of importance which was pointed out to the author (Goss, Personal Communication) was that the vehicular gasifiers prior to and during the Second World War did not need to have rotary grates to remove wood ash so as to facilitate the flow of biomass down through the gasifier. They did not need such rotary grates as the vehicle was constantly moving and the shaking action enabled a good flow of biomass down through the gasifier with the ash falling through the grates. As gasifier designs for today's applications will tend to be for stationary applications, the flow of solid fuel down through the gasifier will present problems and for this reason many new designs have rotary agitators and/or rotary grates. During the Second World War, it was quickly found that updraft gasifiers could only be operated using charcoal as fuel. However, no data are available on the ratio of the three different basic gasifier designs used. One feature of the Second World War

gasifier was that many gasifiers had a water sprinkler used to cool the combustion zone and increase the thermal quality of the gas. It is to be noted that the dry weather of Europe had something to do with this water sprinkler system. Most downdraft gasifiers built during and prior to the Second World War were designed with a throat in order to crack any tar produced. This type of gasifier gave generally fair quality gases and enabled uncarbonized fuels such as wood to be gasified. Crossdraft gasifiers were widely used during the war but they needed clean charcoal as fuel. One important problem with gasifier operation was found to be the problem of ash fusion which occured when the flame temperature was very high due to a particularly small tuyere (Vaing, Personal Communication). Besides the above mentioned basic gasifier designs, the Second World War and Pre-war years experience had very little influence on other gasifier designs such as fluidized beds which will probably become more important in the future.

Activities in Biomass Gasification after 1973

In the years following the oil crisis of 1973 there was a surge of renewed interest in biomass gasifiers. The emphasis was now on using gasifiers in developing countries as a renewable energy source to substitute for imported petroleum products where the emphasis in World War II was to use gasifiers because gasoline was just not available. The emphasis was now on electricity-producing systems, shaft power systems, process heat systems, with some interest in automobile use, whereas the emphasis during World War II was the automobile market mainly. At the beginning of this study only a few institutions, many of them universities, were doing research and development work in biomass gasification systems. Among private companies developing their own gasifiers, it was impossible to obtain an off-the-shelf unit for which the manufacturers would guarantee smooth operation. One of the earliest experiences came from the development and implementation work in Tanzania by the Twente University of Technology of the Netherlands, (Stassen and Zijp, 1980) but most of these implementation programs were at a very early stage and needed to be evaluated in the long term. At the beginning of this study some experience on gasifiers had been accumulated in various places in Thailand. It was therefore decided to base part of the project on the technology development effort already made at the Department of Mechanical Engineering, Prince of Songkhla University.

F. OBJECTIVES AND SCOPE OF THE PRESENT BIOMASS GASIFICATION PROJECT

The objectives of the Biomass Gasification Component of the Renewable Nonconventional Energy Project were to design, build, and implement biomass gasifiers and, based on the experience obtained, give recommendations about the proper actions to further develop and implement the technology. The scope of work as originally formulated involved the design development and implementation of a gasifier in the power range of 20 - 50 kWe for the production of electricity. However, the project called for the possibility of modifying the scope of work according to the views of the project manager, NEA, and all parties concerned in the overall project. The final scope of work involved the development of 5 major gasification systems for varying applications.

Chapter 2

Review of Literature and Information Gained

Previous Page Blank

REVIEW OF LITERATURE AND INFORMATION GAINED

A. PREVIOUS STUDIES IN THAILAND

At the beginning of this study (1981) reported developments of gasifiers in Thailand came from various sources such as the Agriculture Technical Department, Ministry of Agriculture and Cooperatives, from an automobile repair shop in the Ladya District of Kanjanaburi and from the Department of Mechanical Engineering, Prince of Songkhla University in Songkhla Province. The most extensive and the only widely published effort was made at the Prince of Songkhla University in Songkhla Province (Coovatanachai,1981;Coovatanachai,1982;Coovatanachai,et.al.,1983).for gasifiers using charcoal and wood as fuel.

From 1982 onward several gasifiers that became known to the author were built in Thailand. The author saw a gasifier designed and built by the Public Works Department, the Ministry of Interior, shown in the Annex.The unit, believed to be an adoption of a local or Japanese World War II design, is said to be able to gasify charcoal, wood, and other crop residues and is said to produce in the neighborhood of 15 kWe. The author has seen this unit under demonstration at the Public Works Department and operating at a sawmill in the town of Sriraja, Cholburi Province. Several units are reported being used throughout the country but the author has not seen performance results nor any publications. The author has seen a fixed bed rice hulls gasifier at a rice mill in Chachoengsao Province which was used to manufacture ice. The gasifier was linked to an engine of the order of 250 hp and subsequently to a generator. The author saw another gasifier of the downdraft type at a Company in Chiang Mai Province but the capacity of the unit was not obtained (The Mining Industry Factory of Chiang Mai, Chiang Mai Province). Besides these gasifiers the author has heard of a few more gasifiers but has not seen them and does not know the specific designs. These include a reported updraft gasifier coupled with a 120 hp diesel engine, using charcoal, driving a passenger boat at the Gai river in Kanjanaburi Province since 1981. Another one is an updraft unit coupled to a 260 hp diesel engine, using charcoal, and providing power to a rice mill (Amnualpol mill) in Suphanburi since 1981. Still another updraft coupled to a 260 hp diesel engine using charcoal and lignite as fuel has reportedly been in operation in Petchabun Province, and is used to drive a 150 hp compressor.

The lessons that could be learned from the local experience are as follows:

- that gasifiers could be built in Thailand.
- that besides charcoal and wood, rice husk was being used as gasifier fuel.
- that the understanding of downdraft gasifiers for charcoal and downdraft gasifiers with throats for wood was at a stage where development and limited implementation work could be attempted.
- Most of the gasification work was done with no measurements of

particulates and tars and long term experience could not be reported. The Prince of Songkhla University team was the only one to look at and to scientifically attempt to solve the problem of dirty gas.

B. GASIFICATION EXPERIENCE ELSEWHERE

In 1981 at the beginning of this study a search for gasifier manufacturers was undertaken for a 20-50 kWe unit, in the U.S., Sweden, Germany, France, Switzerland, Canada. The search was not successful and indicated that gasifiers were not items that could be purchased off the shelf. Eventually, since 1981, several gasifier groups implemented projects throughout the world such as the corn cob gasification unit in Tanzania and coconut hulls gasifier in Sri Lanka, both designed and installed by the gasifier team of Twente University in The Netherlands (Stassen and Zijp, 1980; Rattanaprakan).

In 1981 the University of California at Davis published a report entitled "state of the art for small gasifiers (less than 50 kW)" which was an excellent review of the fundamentals of gasification and was extremely well received in Thailand. Thus the present project kept open a line of communication with the U.C. Davis research group. Of particular interest was the research group's development of a crop residue downdraft gasifier with rotating grate (Kaupp and Goss; Williams and Horsfield,1977). which proved to work for crop residues of ash content not exceeding 5%.

Subsequently after the conceptualization of the present project, the author became aware of gasification work in the Philippines (Annex 1), in the U.S. (Annex 2), in Japan (Annex 3), in France (Annex 4) and Brazil (Annex 5).

C. PROBLEM AREAS OF GASIFICATION DEVELOPMENT

Technology of charcoal gasification systems

Based on all references it had been reported that the charcoal gasification system was technologically the simplest.It was Technologically the simplest with regards to low tar content of the producer gas, hence requiring less elaborate cleaning trains. This seemed to be the most important difference with systems using uncarbonized fuels. World war II saw the most widespread use of gasifiers with more than one million vehicles running on gasifiers using both wood and charcoal. Since the World War II experience, the operation of gasifiers has never been implemented in such a magnitude.

At the early stages of this project no widespread implementation scheme was known to the author but subsequently the Philippine charcoal gasification program came to light as the largest or one of the largest implementation program (Foley and Bernard,1983). The author's own visit to the Philippines' Bioenergy program in March 1983 and the demonstration of the charcoal gasifiers revealed very strongly the technical viability of the process although some technical aspects still had to be ironed out. Such aspects include exact exit gas specifications, start-up procedures,

and full proof reliability of the system.

In Thailand the first charcoal gasifier had been tested somewhat before 1981 by the Agriculture Technical Department but further development had abruptly stopped. Prototypes were designed and built in Thailand but the most important effort was that of the Prince of Songkhla University (Coovatanachai,1981 and 1983) which demonstrated that charcoal gasification systems for stationary applications such as water pumping and electricity generation was possible and could be developed in Thailand. The units developed in the Philippines were of the order of 7 hp upward to 250 hp (Annex 1), whereas the Prince of Songkhla experience was at the time confined to systems in the 10 hp range. However, subsequently slightly larger units were developed. Thus it was recognized that charcoal gasifiers could be made to operate in Thailand. However, the author learned that besides gasifier design and construction, gasifier operation was itself part of the technology and was a crucial link for operator and social acceptance of the technology.

Technology of Wood Gasification Systems

It was known at the beginning of the study that wood (which normally has an ash content less than 1% and a bulk density somewhat less than one g/cu.cm) when chipped into pieces could be gasified in downdraft gasifiers only (Kaupp and Goss,1981;Seri,1979;Foley and Bernard,1983). The main feature of such gasifiers was a throat made up of a choke plate or some other constrictions in the middle of which temperatures were very high (perhaps above 1,000℃) and through which nearly all passing tars would be cracked into gas. The resulting gas would be relatively free of tar, particularly at full load operation. Nevertheless an efficient cleaning train, more stringent than for charcoal gasification, was called for in wood gasification systems. However, no consensus on optimal cleaning train design existed. As in the case of charcoal gasification, actual implementation programs of wood gasifiers were not widespread although some units were known to exist in the world. Again the comment often heard in Thailand by the author was the problem of deforestation if large implementation programs were carried out. At the beginning of this study the only reported extensive wood gasification experiments had again been conducted at the Prince of Songkhla University (Coovatanachai,1981; Coovatachai,1982; Coovatanachai,et.al.,1983). The status reported at the time was that the confidence in producing a tar-free gas from a wood gasifier was less than producing a tar-free gas from a charcoal gasifier. The development attitude of the Prince of Songkhla University research team seemed to favor the elimination of the tar in the gasifier with the help of a throat rather than producing a tar-laden gas and cleaning the gas in an elaborate cleaning train. The Prince of Songkhla University research team subsequently achieved success in designing a relatively good wood gasifier (Coovatanachai,Personal Communication). As in the case of charcoal gasifiers, the operation of wood gasifiers was itself elaborate.

Technology of Crop Residue Gasification Systems

At the time of the beginning of this study, crop residue gasification was absolutely not known to the author. Subsequently the corn cobs and coconut hulls gasification programs in Tanzania and Sri Lanka came to light. Still later on some rice hulls gasification in Thailand and China

came to light (Cha Cheng Sao Rice Mill, Personal Communication;Jia,1982). The technology,however, was very different from one residue to another. The gasification of crop residues was believed to be classifiable into downdraft concurrently moving beds and into fluidized beds. There was particular interest in Thailand to gasify crop residues due to their abundance and the fact that most of such residues were not used. To summarize the status of crop residue gasification at the beginning of this study, it may be said that very few prototypes had been built and even fewer had been implemented in the field with the result that no information was available on this topic as of 1981 at the start of this study.

Designs of gasifiers from the literature

In making a summary of various gasifiers that have been developed it is perhaps interesting to present various designs with respect to types of raw material utilized.

Wood Charcoal Gasifiers

The design of gasifiers using wood charcoal as fuel is traditionally based on updraft, crossdraft or downdraft fixed bed designs only. The use of fluidized beds which are sophisticated in construction and operation is disadvantageous for charcoal gasification mainly because charcoal gasification is done more easily on fixed bed gasifiers. The designs that have had the most success before 1945 were the downdraft and crossdraft types whereas the post-1973 gasifiers have mostly been designed around the downdraft type. The main difference between downdraft and crossdraft designs of pre-1945 gasifier vehicles was that crossdraft designs were used in applications that necessitated frequent load changes such as city traffic as responded faster to load changes; downdraft gasifiers were better suited for constant load vehicular application such as intertown flat road driving as downdraft gasifiers were slower to respond to load changes (Arthayukti,1984). In post-1973 gasifier uses the vehicular applications are perhaps of less interest than stationary applications and very little development work of crossdraft gasifiers are believed to be done today. Another factor concerning downdraft and crossdraft gasifiers is that for a given charcoal charge, and particularly for a charcoal with some remaining volatile matter, the gas quality from a downdraft gasifier is believed to be cleaner with regards to tar content. However, data is not available to substantiate this assessment. Still another factor is the existence of dead zones in a crossdraft gasifier resulting in the need to clean the reaction chamber once in a while to remove unreacted charcoal. Updraft gasifiers have had a history of use before 1945 but it is believed that downdraft units were more popular especially during the war years. Two advantages of updraft gasifiers are as follows: first, we have a countercurrent flow of solid fuel and gas, with the gases exiting from the combustion and reduction zones preheating the top layers of charcoal and leaving at low temperatures. This thereby makes the design more efficient than a downdraft unit in which the exiting gases are hot. Secondly, the combustion being at the bottom near the grate, there is little chance for unreacted carbon to fall through the grate with the ash. This is what happens in downdraft gasifiers where less than 100% of the carbon is reacted (Goss, Personal Communication). However, the updraft gasifier has the very serious disadvantage of producing tar if the charcoal contains volatile matter. This tar is formed when the hot gases pass through the

pyrolysis zone just above the reduction zone.Thus, in order to use updraft gasifiers, the charcoal must be of the highest quality. The use of non-carbonized fuels would not be possible in an updraft gasifier due to an excessively high production of undesired tars. The author built such a unit at the beginning of the project and found that an updraft gasifier using wood chips was producing high amounts of pyrolytic oils and tars. One possible use of updraft gasifiers with charcoal containing some volatile matter would be to burn the gas for heat applications. Another point concerning charcoal gasifiers in general is that the sizes of charcoal fed into the gasifier determine the smooth operation of the gasifier (Seri,1979). Too large a size of charcoal is undesired. It is to be noted that besides wood charcoal the only other biomass charcoal that has been used in gasifiers is coconut shell charcoal. The Philippines operate some of their gasifiers using coconut shell charcoal in small downdraft gasifiers (Philillines Bioenergy Program Visit, 1983).Another feature of importance is the use of a movable grate at the bottom of the gasifier whenever we have a stationary application. In small charcoal gasifiers that the author has built, a hand shaker was sufficient to prevent ash from blocking the grate. For vehicle application this feature is perhaps not necessary as the gasifier will be constantly in motion (Goss, Personal Communication).

Wood Gasifiers

Since wood contains a high percentage of volatile matter the utilization of wood chips in crossdraft and updraft gasifiers will likely produce a bad quality gas. The author has never tested a crossdraft gasifier but recalls no instance in the literature where used of wood chips was reported. Thus, besides eventual use in fluidized beds which we shall briefly mention later, the only other design that has traditionally been used to gasify wood is the fixed bed downdraft gasifier design. One of the practical problems of wood gasifiers is the labor or the mechanical chipper investment cost problem. Some downdraft wood gasifier designs are equipped with a double jacket in the upper part of the gasifier that allows water vapor from the wood chips to condense upon contact with the outside shell. An excess of water participating in the reaction is detrimental to gas quality. However, there exists a water content that optimizes gas quality as seen by some charcoal gasifiers injecting water in their units to increase hydrogen production. The downdraft wood gasifiers used for vehicular applications in World War II were not built with a movable grate as the vehicles themselves were constantly moving. Some post-1973 gasifiers used for stationary applications have been equipped with movable grates (Kaupp and Goss,1981;Williams and Horsfield,1977). Wood gasification may also be performed in a fluidized bed. However, the design, construction and operation of wood gasifiers is somewhat sophisticated. The requirements for fluidized bed gasification would seem to be medium to large scale gasification of wood waste, or the gasification of municipal tree trimmings which include leaves and branches which cannot be gasified in ordinary fixed bed gasifiers. However, for small applications the fluidized bed technology requires too sophisticated and expensive instruments and too much skill to operate (Goss, Personal Communication). However, its condition of use is now being investigated in Thailand.

Gasifier Designs from Other Crop Residues

It is often said that a gasifier design must be tailored to fit the raw material. There are two crop residues that come in shapes and sizes that can make them interchangable with wood, namely coconut shells and corn cobs. The designs will invariably be downdraft with a throat (Stassen and Zijp, 1980; Rattanaprakan, Personal Communication). Another crop residue that has received widespread interest in rice-producing countries is rice husk. There are various designs available (Kaupp,1983; Kaupp,1984; Cruz,1983; FAO/FHI Proceedings,1982; FAO Second Expert Proceedings,1983). including many undocumented designs even in Thailand itself. Perhaps, the most famous rice husk gasifier is the Chinese design illustrated in the above references. The gasifier is of the downdraft type with a very large diameter without any throats. Combustion takes place in the middle of the bed with charred rice husk in the bottom half and fresh rice husk in the top half. The grate is a movable one and is perforated to allow for the ash to drop into a water seal. The combustion is regulated by the rotation of the grate which removes the ash from the gasifier. The combustion level has been said to be measured by placing an iron rod inside the bed then taking it out to see at which level combustion took place. The gas obtained then goes through an elaborate water scrubbing and filtering train to remove the particulates and the tars formed.

Other crop residues for which little gasification information is available are rice straw, corn stalks, cotton plants, cassava stem, bagasse, coconut fibers, etc. Such residues are available in Thailand and much of it is unused in rural areas (Saunier,1983). For medium to large scale applications the fluidized bed design would seem to be the best alternative to consider to gasify such materials. Fluidized beds can handle shredded crop residues even with ash content as high as 20% with no difficulties which would mean that all crop residues could be gasified. The author has seen a medium size fluidized bed in operation at the University of California at Davis. The major problems are the shredded raw material getting entangled in the rotary screw feeders that feed the biomass into the bed, and the problem of knowing the properties of the ash contained in the biomass to prevent the fluidizing material from hardening. The operation of a fluidized bed system requires engineering skills; this technology would certainly not be appropriate in a village, but perhaps appropriate in a rural factory. The problem with crop residues is that they are heterogeneous, low denisity materials and when they descend through a downdraft gasifier with a throat, they either fall with difficulty due to their low density or their ash fuses and blocks passage of additional biomass. The University of California at Davis has experience with gasifying an array of crop residues (Kaupp,1981; Williams and Horsfield,1977) in a fixed bed downdraft gasifier with a throat and a rotary grate and concludes that gasification of crop residues is feasible if the ash content does not exceed 5%. Besides traditional downdraft gasifiers with throats, some gasification engineers have asked themselves why it would be impossible to gasify biomass in vertical no-throat gasifiers (Kauppm1984; Kaupp,1983). The advantage of a no-throat gasifier would be to ease flow of biomass down through the gasifier, and make it much simpler to construct. A potential disadvantage would be that for non-carbonized fuels there would be excessive tar. Even if the system could be optimized with the proper air flow rate, the proper temperature inside the combustion zone, as well as proper depth of combustion zone, the system

would not be able to respond to changes of load. However, little work has been done in this direction except the work done at UC Davis (Kaupp,1983; Kaupp,1984) and at the Solar Energy Research Institute (Reed,et.al.,1983; Reed and Markson,1983).

Designs of the Cleaning Train

Producer gas that is to be used in internal combustion engines must be cleaned of particulates, volatile matter such as pyrolytic oils and tars and water, and must be cooled down. The reason for this is that internal combustion engines will not tolerate excessive particulates and tars. A review of biomass gasification commissioned by the World Bank and published in 1983 (Foley and Bernard,1983) mentioned a World War II figure for an acceptable level of tar content in producer gas of up to 0.6 mg/cubic meter and an acceptable level of particulate concentration of 10-20 mg/cubic meter (Australia's standard was 5 mg/cubic meter during the war). The amounts of both particulates and tars in producer gas depend on the design of the gasifier and the fuel used. The gas cleaning trains will be more or less efficient, but in general efficiency of gas cleaning will be followed by high pressure drops. The same reference as above sets a maximum economic pressure drop on the cleaning train of 1,000 mm water but this figure is perhaps too high for very small gasifiers. The cleaning will normally consist of a hot cyclone which will be placed immediately after the gasifier. This cyclone uses a centrifugal action to separate large particulates from the main gas stream. The gas then normally goes into a cooler which is usually air-cooled and only rarely water-cooled. If the raw material is wood, some designs do make use of water scrubbing devices. Although tar removal is not particularly efficient in water scrubbers, an oil scrubber would perhaps be more efficient but would certainly be more expensive. Also for wood fuels the literature mentions volume filters filled with adsorbent materials such as cork, wood-wool, sawdust, and recently fiber glass. Coming back to ordinary charcoal gasifiers, the cleaning unit after the cooler would need to be only a fabric filter. Many gasifier systems like to have a final fabric filter to act as a final safety filter and an indicator of the status of the cleaning train.

Social, Cultural and Economic Problems of Gasifier Systems

After reading the literature described in the bibliography, the author feels that there exist social, cultural and economic thresh hold requirements above which gasification systems will be accepted. In the Second World War non availability of gasoline forced such thresh holds to be reached and the use of gasifiers climbed to over a million vehicles. Since the Second World War no implementation programs have reached such a magnitude. Perhaps the only two countries that have achieved some degrees of success in gasifier implementation are Brazil and the Philippines as described in the Annex. Brazil with an existing wood supply has developed its gasifier program through its private industry. The main outlets of gasifiers have been vehicular applications and process heat using wood and charcoal and with the number of units around the thousand mark at most (Foley,et.al.,1983). The Philippines with no existing wood supply has developed its gasifier program through government instituted organizations and companies. The main outlets have been vehicular application, boat transportation, water pumping, rural electrification, mechanical applications in rural areas, drying applications, with fewer

uses in industry. The Philippines has had the additional difficulty of being forced to set up dendroplantations and charcoal manufacturing facilities to supply charcoal fuel to the eventual gasifiers used througbhout the country. The number of operating gasifiers in the Philippines is now around the thousand figure also. In a country such as Thailand, although the potential of gasifiers has been recognized, the deforestation problem presents the National Energy Administration with problems in its gasifier development effort.In Integrating the various experiences in biomass gasification,the factors that are problem areas for the government, for the user, and the operator of the technology may be summarized by the following key words.

At the national level:	Lack of wood supply Deforestation problem Rural electrification policy Existence of a government that will develop the technology
At the user & operator level:	Availability of gasoline, diesel, kerosene Cost of gasoline, diesel, kerosene Cost of gasifier system Ease of operation and maintenance of system Cost and availability of the fuel

From the list of criteria relevant to gasifier implementation success, no generalized model can be written to inform the decision maker of specific applications of a certain technology and its implementability. Some household energy models have however been developed that can analyze parameter sensitivities. For example, gi en a household with a choice of energy technologies, biomass gasification being one, the household energy model is able to modelize the adoption or rejection of a biomass gasifier using start-up time plus maintenance time as parameters based on a model of the operator's time value (Arnold, Personal Communication). However based on the information available today,any prediction a priori of implementation sites and systems does not exist.

Chapter 3

Planning and Design of the Project

PLANNING AND DESIGN OF THE PROJECT

A. FORMULATION OF THE PROJECT

The formulation of the initial project started with talks on a USAID - Thai Government jointly funded Renewable Non-Conventional Energy Project between USAID, DTEC (The Department of Technical and Economic Cooperation), and NEA (The National Energy Administration, Ministry of Science Technology and Energy). Having determined that biomass gasification was to be one of fourteen components of the Project, the author was approached to take the direction of the biomass gasification component. The objectives of the component was to present a set of recommendations to the NEA on future activities in Thailand on biomass gasification based on experimental and implementation work of gasifier systems. The consultant to the project leader had originally recommended that a 20-50 kWe gasifier system be purchased abroad and implemented in Thailand, making use of foreign expertise. But after subsequent meetings between all parties concerned, it was decided to make use of a maximum of local expertise and increase the scope of work to include a number of gasifier systems that will be presented in a subsequent section.

The primary objectives of the biomass gasification component was to design, construct, test run, implement and produce conclusions and recommendations on the following gasification systems:

1. A 500 We electricity generation gasifier system
2. 7 hp (mechanical and/or electricity) gasifier system
3. A 16 hp (mechanical and/or electricity) gasifier system
4. A 25 kWe electricity generation gasifier system
5. A direct fire fluidized bed gasifier system

The reasons for including item (1) was that such a system would partly solve the problem of rural electrification at the household or extended household level,banking on the user owning, utilizing, and profiting from the system. The uniqueness of this system was its small size and the removal of problems arising from communal ownership of an energy system. The initial objective was also to investigate the possibilities of using fuels other than wood charcoal. Items (2) and (3) had been included as they would fit with small engines, both gasoline and diesel, that were already widespread in rural Thailand. The applications of items (2) and (3) were to be aimed at either mechanical power or electricity or both, and with either gasoline engines or diesel engines or both. The fuels to be used were to be crop residues for item (2) and wood for item (3). For item (4) it was decided to operate a diesel engine on a dual fuel mode to produce 25 kWe of electricity using corn cobs or wood as fuel. Item (5) was meant to demonstrate the technical feasability of constructing and operating a crop residue fluidized bed gasifier in Thailand.

Previous Page Blank

The secondary objectives of the biomass gasification component was to create a research and development unit around the component leader in order to assist the NEA and other private gasifier entrepreneurs, in order to serve as information focal point, and in order to pursue research and development work on the topic. This institutional building aspect of the overall project was seen to be an important element in order to continue research, development, and implementation work in the future. There were two aspects to this topic: namely, the equipment used in this project that would continue to be used for future work, and the technical experience gained by the component leader and his associates in this project that would be used in future activities.

Foreign technical inputs to the component

As the technical assistance to the component was to be achieved using local expertise, the component leader felt that some limited foreign technical assistance input should be programmed. This foreign technical input would be used to familiarize the component leader with the state of the art on biomass gasification outside Thailand and help him during the project. One technical assistance scheme worked out was to have an exchange of questions and answers between component leader (in Thailand) and expert (in the U.S.) by letter. Long term visits of "hands on" experts was also envisaged in the early stages of the project.

Foreign Training and Workshops

Early in the formulation of the project a need had been defined to have the component leader and/or his associate(s) to spend four man-months' worth of training abroad. It was argued that this activity would promote the overall project objectives. If a component had progressed satisfactorily enough the project managers would recommend that workshops be held. Such workshops would bring in resource persons and would aim at disseminating the technology to a group of workshop participants. This activity would be beneficial in the dissemination of the technology on one hand and would be beneficial to the component in question by bringing together various resource persons both within and outside Thailand.

Local Technical Inputs to the Component

The primary known inputs from the Thai side had originally been identified as university researchers, namely from Chulalongkorn University and the Prince of Songkhla University. These experts and the component leader were to be responsible for various units to be developed within the various systems, meaning that for some gasifier systems more than one unit could be developed. The details of the various units will be presented in a later section. Besides gasifier experts the component could call upon technical and secretarial work during the project.

Financial Arrangements of the Project

The initial financial commitment to the biomass gasification component came from three sources: USAID, NEA and DTEC. USAID's contribution was of the order of 3 million baht, NEA's contribution started at 50,000 baht a

year and eventually reached a total of 483,000 baht over a period of three years, DTEC's contribution amounted to about 60,000 baht. The contribution from USAID was renegotiable every fiscal year as each component's objectives could be changed upon debate and clearance in the annual meetings of the funding organizations, the project leader and the component leaders. Thus the actual amount of USAID funds finally spent will be substantially lower than the above quoted estimate. The flow of funds from government sources was to be channelled through NEA to Chulalongkorn University with money for a given fiscal year (from October to September) available and to be used from the month of February to mid-August. The flow of funds from USAID would follow any one of four channels. For outside Thailand equipment purchases USAID money was channelled through DTEC. For foreign and technical assistance payments USAID money was channelled through an NEA consultant, for in-country equipment purchases and expendables purchases and services USAID money would be channelled to Chulalongkorn University. The funds received by the component leader were to be deposited in the Bank of Thailand under the name of the biomass gasification component, Faculty of Engineering, Chulalongkorn University and under the supervision of the Dean of Engineering. The fund deposited in the Bank was an advanced sum of money which upon proof of purchase forms from the component leader would be refunded by USAID to maintain a supply of funds in the account.

B. DEVELOPMENT PLANNING OF THE BIOMASS GASIFICATION GROUP AT CHULALONGKORN UNIVERSITY

Institutional Background Prior to Project

The component leader and his colleagues at Chulalongkorn University had had no previous experience with producer gas technology. The component leader himself is on the Faculty of the Department of Chemical Engineering. The Department has bachelor's and master's degree programs with an undergraduate class of 35 and a graduate class of 15. The Department had at the early stages of the project some analytical chemistry laboratory facilities and limited experimental platform space. The various libraries within the University had absolutely no up-to-date information on biomass gasification. The component leader had no contacts with researchers in the field either in Thailand or abroad. Thus laboratory facilities, equipment and technical expertise had to be obtained.

Testing Facilities and Equipment Requirements

In order to test gasification systems it was felt that a test platform with no walls would be required within the campus of Chulalongkorn University. The test platform was to be far from other buildings due to the danger of carbon monoxide leakages. During the early stages of the project there was debate as to the scientific equipment needed to fulfill the objectives of the project and it was finally agreed that a sufficient amount of scientific equipment would be purchased upon consideration by the funding agencies concerned. As component leader the equipment necessary was to be equipment which would serve the primary objectives of the project and provide an equipment infrastructure for future research and development work.

The Acquisition of Technical Expertise

Starting from very little knowledge of biomass gasification, the component leader aimed at obtaining relevant information by contacting local experts, contacting foreign experts, purchasing books, collecting articles and reports, going on study tours abroad, and learning by building some gasifiers in the laboratory. The biomass component project had a study tour programmed as one activity and the component leader subsequently attended that study tour. The project also had funds to hire foreign consultants, but on a limited scale, and use was subsequently made of this possibility to acquire additional knowledge. Toward the end of the project, funds had been made available to organize technical meetings such as seminars or workshops through which contacts with foreign researchers could be made. A workshop was eventually prepared.

Management Aspects of the Biomass Gasification Group

Soon after the start of the project it became clear that the biomass gasification component had to be managed efficiently to coordinate the various systems being developed in various places, to manage the flow of funds from USAID down to the component leader, to type the various letters and purchase forms according to Government regulations, to send telegrams and telexes and several more duties. The component was eventually allowed to hire secretarial help to handle such details.

C. THE 500 We GASIFIER SYSTEM PLANNED

The concept behind the idea of developing a very small gasifier was that a non-electrified rural household (or extended household) would accept an energy system that it could own, operate, and use for its basic needs. This producer gas system would probably be the smallest that could be engineered. The expected advantages of this system would be as follows:

- a system that a rural household can afford (a gasifier, an engine, a generator or a water pump);
- a system where the solid fuel can be obtained cheaply;
- a system that needs no labor outside the household and no technical expertise;
- a system that fulfills on energy need (lighting or water pumping).

Expected problem areas that would have to be studied were as follows:

- the capital investment of the system may be too high compared to benefits obtained;
- the energy system may be too time-consuming in terms of solid fuel preparation, start-up procedures, and maintenance operation for the household to accept;

- the complexity of the technology may be too high for the technical competence of the household;

- the gasifier system may fulfill an energy need, but another energy system may be more acceptable to the rural household.

The estimated size of the gasifier (500 We) was based on the energy needs of one rural household (or extended household) only but it was not known whether such a small system could be engineered. The fuel to be used had not been clearly defined; it had been hoped that a fuel besides charcoal could be used as it would eliminate the problem of having the charcoal manufactured in the household. The complexities involved with the entire system were also not known at the beginning of the project. It was, however, decided that a household electricity generation system be built to be used for lighting, television watching and miscellaneous applications. It was understood that one unit would be built; however, subsequently several 500 We units were eventually built.

D. THE 7 hp GASIFIER SYSTEM PLANNED

The concept behind the 7 hp system was that a gasifier system for prime mover applications (either for mechanical power or electrical power) in this range would be needed for farm applications. In the initial stages of the project it was felt that a system of this size could be coupled with engines of such power ranges for miscellaneous applications such as water pumping on the farm. Initially it was felt that the design should be made to utilize a crop residue instead of wood or charcoal. It was also not determined whether to use this system with a gasoline or a diesel engine. Once the system was built and tested, the idea was to test it in the countryside but no defined sites had been set beforehand.

E. THE 16 hp GASIFIER SYSTEM PLANNED

The concept behind the 16 hp system was to develop a gasifier system using wood chips as fuel with no set requirements as to end use (either for mechanical power or electrical power) and no requirements as to types of engines to be used (either gasoline or diesel engine). As with the above systems, it was felt that there were a number of engines in this size in the countryside and that it was necessary to design such a unit.

F. THE 25 kWe GASIFIER SYSTEM PLANNED

The concept behind the 25 kWe gasifier system had originally been to purchase a 20-25 kWe unit from abroad and to implement the unit in Thailand as a direct transfer of the specific technology. It was later decided to modify the concept and develop the entire system locally. The raw material to be used was to be wood chips or corn cobs. The unit was to be used to produce electricity in a rural setting, if possible near a diesel Provincial Electricity Authority site. The unit was to be linked to a diesel-generator unit so that an implementation success could be repeated

within the PEA diesel infrastructure. It had originally been planned that PEA would be interested in the system and would oversee the implementation work.

G. THE DIRECT FINE FLUIDIZED BED GASIFIER SYSTEM PLANNED

The National Energy Administration had doubts over the use of wood and wood charcoal in gasifiers without a successful village woodlot program, especially in view of the very serious problem of deforestation in the country. Thus there was great interest in the possibility of use of agricultural crop residues or other non-wood biomass as a source of gasifier raw material. It was well known, especially from the work at the University of California at Davis, that gasifying crop residues in downdraft fixed bed gasifiers was not a straight forwardtechnology; indeed it was feasible on certain crop residues, notably those with an ash content less than 5% and with a fair density, whereas high ash content materials could not be gasified as readily. Citing the experience of the University of California at Davis with crop residue gasification and their subsequent interest in fluidized bed gasification, the project leader agreed to develop a fluidized bed system using crop residues. The objective of the unit was to develop process heat in rural industries as it seemed that rural industries would have sufficient technical expertise to make the technology work. The principal concern of the National Energy Administration was first, whether the technology could be made to work with local expertise so that scale-up work could be considered in the future. A second concern was determining which design would be most appropriate to use in Thailand. No size restrictions had been placed upon the system to be developed as it was to be a laboratory model for demonstration purposes only.

H. FINAL SELECTIONS OF GASIFIER UNITS FOR EACH SYSTEM

During the progress of the biomass gasification component a certain number of changes were made for various reasons. Presented here is a final set of designs that was agreed upon including the reasoning behind their conception. Eventually for some gasifier systems several gasifier units were built. There were several reasons for having built many units instead of only one; it was sometimes a question of technology trial and error, as the component had to go through a learning process.

Selection of Units for the 500 We Gasifier System

A total of four 500 We gasifier units were designed. The designs and the main features are presented in this section.

- 500 We gasifier (Unit number 1): The gasifier chamber of the unit is shown as a sketch in Figure 3.1 and details of the construction may be found in Annex 6. This downdraft gaifier is designed to operate on charcoal and is of the central tuyere type with air entering through the tuyere and exiting at the bottom. This particular design is based on the gasifier development work at the Prince of Songkhla University.

- 500 We gasifier (Unit number 2): The gasifier chamber of the unit is shown as a sketch in Figure 3.2 and details of the construction may be found in Annex 7. This unit is an updraft gasifier designed to operate on charcoal with air entering through the grate and exiting some 24 cm above the grate as shown. The main reason for designing this unit was the fact that updraft gasifiers had little uncarbonized charcoal falling down through the grate and were thus more efficient than downdraft gasifiers which had a small percentage of fuel as unreacted charcoal coming down through the grate. The problem was to see if the gas was clean enough to run an engine as updraft gasifiers are well-known to generate dirty gas.

- 500 We gasifier (Unit number 3): The gasifier chamber of the unit is shown as a sketch in Figure 3.3 and details of the construction may be found in Annex 8. This unit is a downdraft gasifier using charcoal with air entering through to side tuyeres and exiting at the bottom below the grate. The difference between units 3 and 1 is that unit 1 uses a central tuyere. The reasoning behind unit 3 was that the central tuyeres as developed by the Prince of Songkhla University tended to be exposed to high temperatures and to deform after an extended period of operation. Thus a side tuyere system open to the exterior (and not hidden by a heat transfer jacket) seemed to be a good alternative design.

- 500 We gasifier (Unit number 4): The gasifier chamber of the unit is shown as a sketch in Figure 3.3 and details of the construction may be found in Annex 9. This unit is a downdraft gasifier using charcoal as fuel with air entering through a central tuyere, like unit number 1, and exiting below the grate. The size of units 4 and 1 being roughly equivalent, the differences are in the design details inside the gasifier chamber and also at the cooling train system level.

Selection of Units for the 7 hp Gasifier System

A total of three 7 hp gasifier units were designed. One was for purely experimental purposes for studies of crop residue gasification and the other two for charcoal gasification. This 7 hp gasification system had originally been selected for crop residue gasification; however, in the course of the study, crop residue gasification was found to be beset with many problems. The designs eventually decided upon and their main features are presented in this section.

- 7 hp gasifier (Unit number 1): The gasifier chamber of the unit is shown as a sketch in Figure 3.5. The idea behind this particular design was to study the possibility of gasifying crop residues, in particular rice husk and corn cob, in a straight tube downdraft gasifier. The concept had been obtained through discussions with a U.S. based consultant of the project. The concept was quite new and it was felt was worth trying in the laboratory to test its technical potential. The main features of this gasifier was that it had no throats, and was open at the top, thus easy to build. This gasifier was designed as a batch gasifier but could be

converted into a continuous unit. A report is presented in Annex 10.

- 7 hp gasifier (Unit number 2): The gasifier chamber of this unit is sketched in Figure 3.6 and details of the construction may be obtained in Annex 11. This unit is a downdraft gasifier using charcoal as fuel. Its major feature is that it has six inner tuyeres connected to the outside by a single pipe air inlet. This particular unit was to be connected to a gasoline engine and generate electricity.

- 7 hp gasifier (Unit number 3): The gasifier chamber of this unit is sketched in Figure 3.7 and details of construction may be obtained in Annex 12. This unit is a downdraft gasifier using charcoal as fuel. Somewhat similar to the 7 hp gasifier (Unit number 2), this unit was to be used with a diesel generator system. The only point of caution with this unit was the need to have a very clean gas go into the diesel engine because of the difficulty of taking diesel engines apart for cleaning.

Selection of units for the 16 hp gasifier systems

A total of two 16 hp gasifier units were designed. The designs and the main features are presented in this section.

- 16 hp gasifier (Unit number 1): The gasifier chamber of the unit is sketched in Figure 3.8 and details of construction may be found in Annex 16. This downdraft gasifier is designed to operate on wood chips and uses side tuyeres with the gases exiting below the grate. This design was to be used to generate electricity.

- 16 hp gasifier (Unit number 2): The gasifier is the same type as unit number 2 but this unit was designed for water pumping purposes.

Selection of Units for the 25 kWe Gasifier System

For this size only one unit was designed as shown in a sketch in Figure 3.9. Additional details may be obtained from Annex 13. This downdraft gasifier was designed to handle wood chips or crop residues which behaved like wood i.e., low ash content and in pieces such as corn cobs. The gasifier was to be used with a diesel engine generator and the maximum output was to be 25 kWe.

Selection of Units for the Direct Fire Fluidized Bed Gasifier

For this fluidized system it was decided to have two separate designs made:

- The fluidized bed gasifier (Unit number 1): The fluidized bed gasifier (Unit number 1) was designed for direct fire and the design is sketched in Figure 3.9. Additional details may be obtained in Annex 14. The principle behind this fluidized bed is the separation of the combustion zone and the reduction zone as against a single fluidized vessel where all reactions occur in a single fluidized bed.

- The fluidized bed gasifier (Unit number 2): This fluidized bed gasifier was designed for use with an engine and its main feature was to incorporate two fluidized beds into one shell as shown in Figure 3.11. Additional information on this system may be obtained in Annex 15.

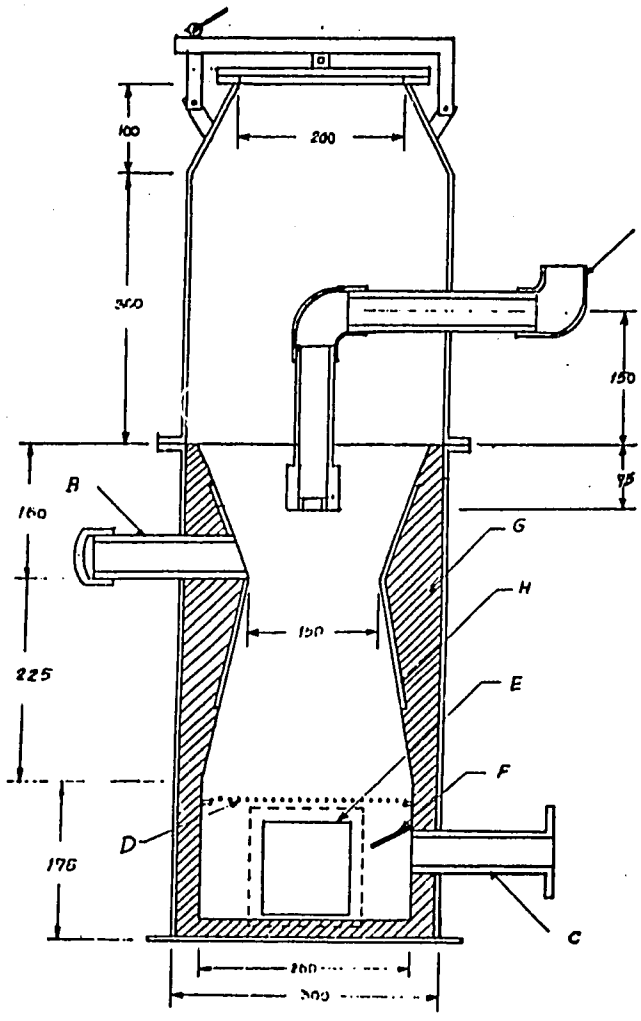

Figure 3.1 - 500 We Gasifier (Unit Number 1)
Downdraft Charcoal Gasifier

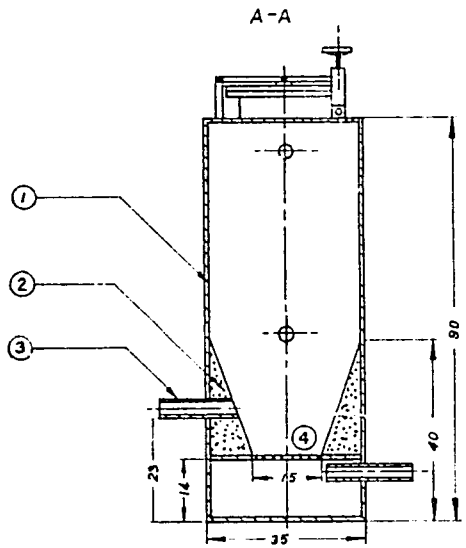

Figure 3.2 - 500 We Gasifier (Unit Number 2)
Updraft Charcoal Gasifier.

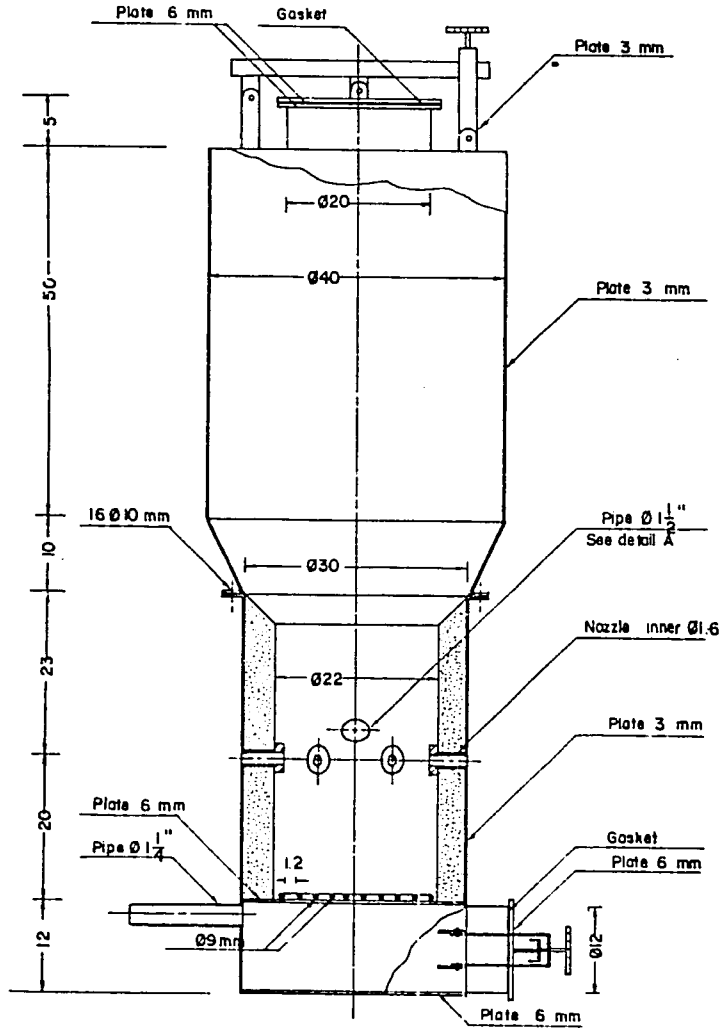

Figure 3.3 - 500 We Gasifier (Unit Number 3)
Downdraft Charcoal Gasifier.

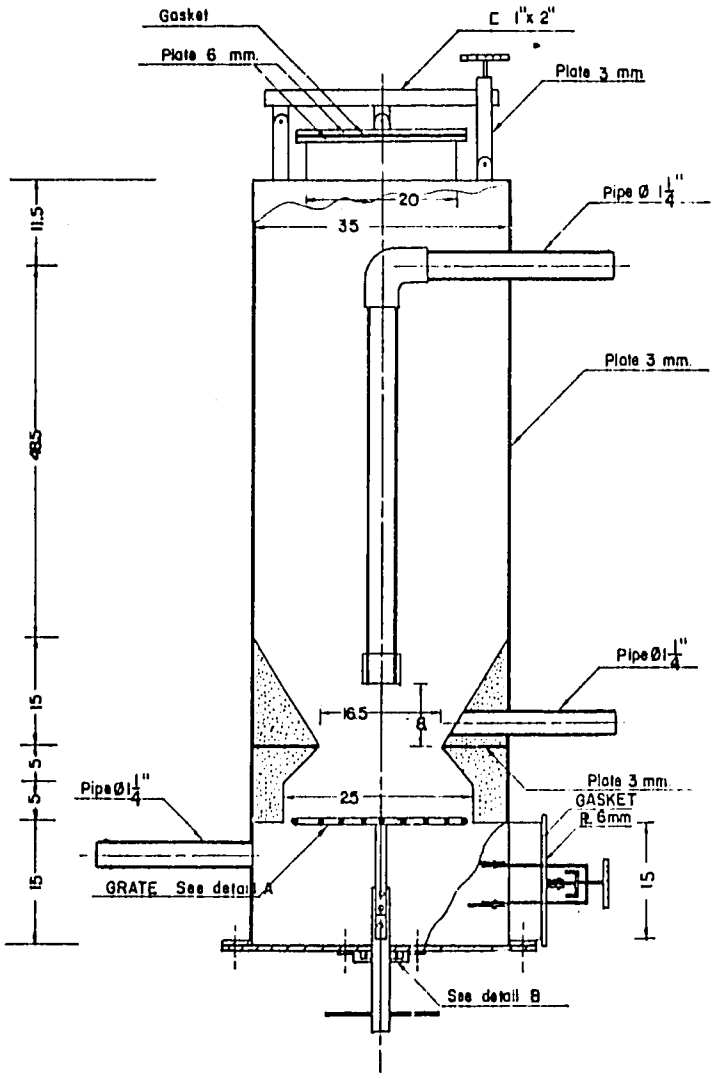

Figure 3.4 - 500 We Gasifier (Unit Number 4)
Downdraft Charcoal Gasifier

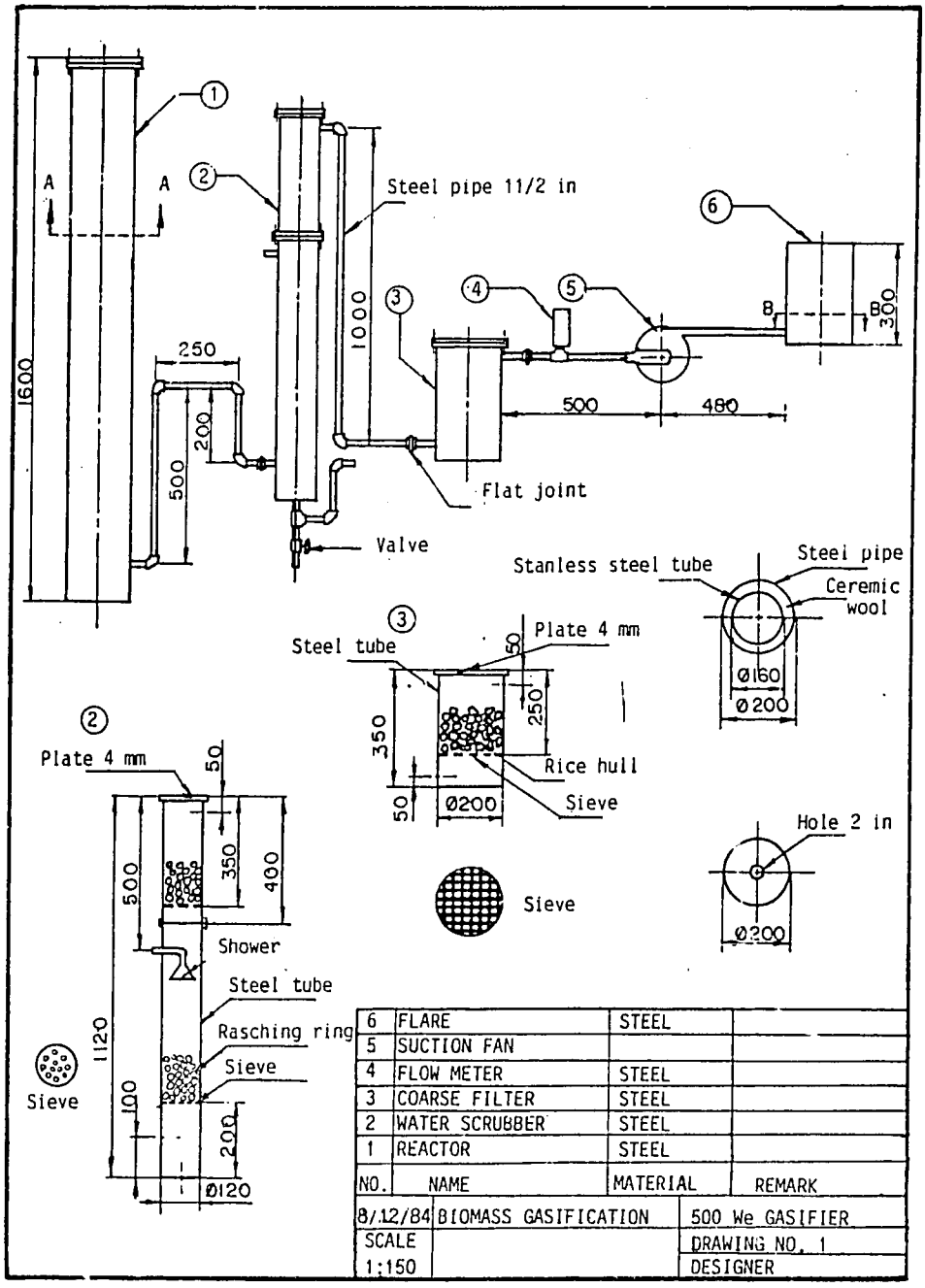

Figure 3.5 - 7 h.p. Gasifier (Unit Number 1)

Crop residue gasifier, experimental unit

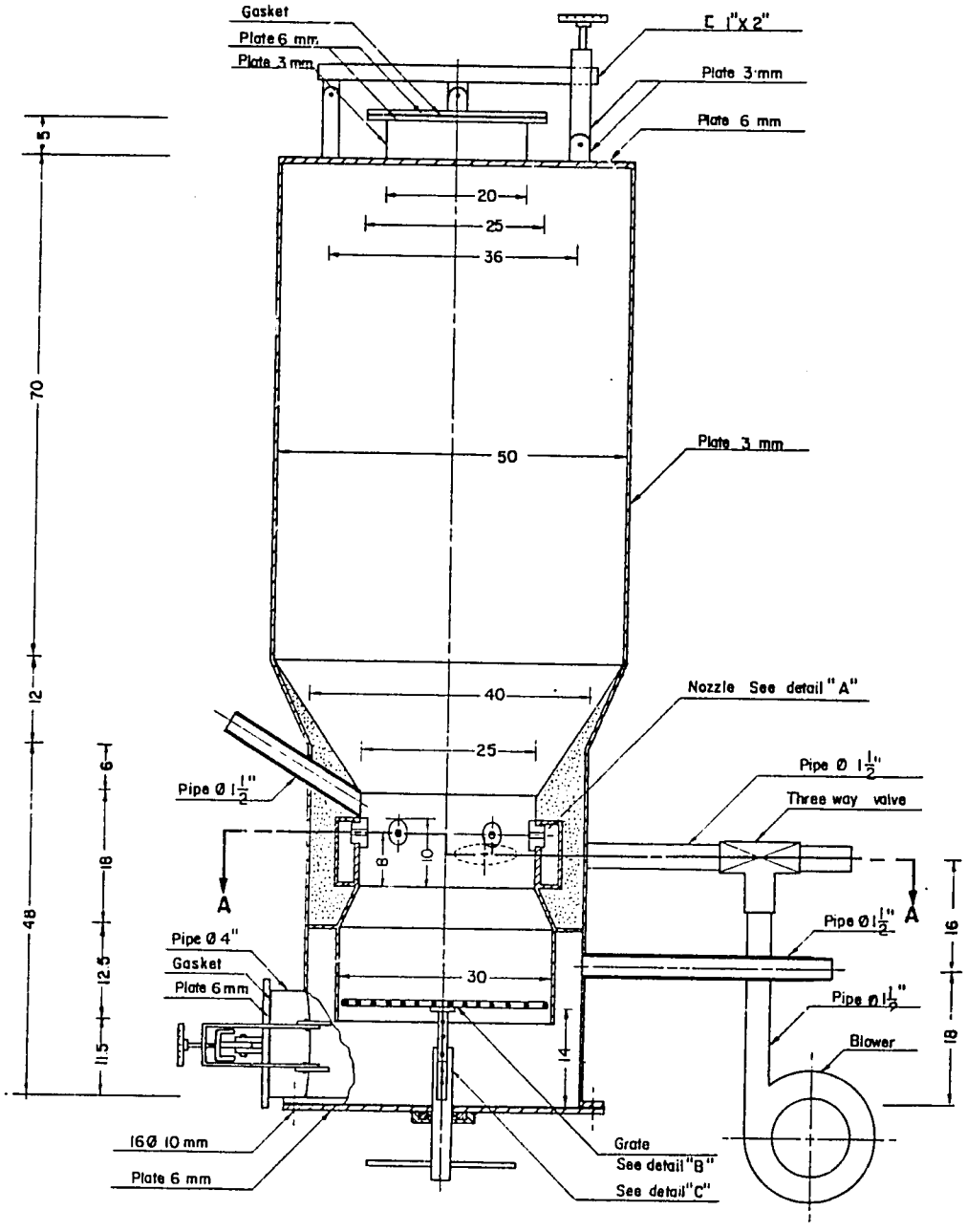

Figure 3.6 - 7 h.p. Gasifier (Unit Number 2)
Downdraft Charcoal Gasifier

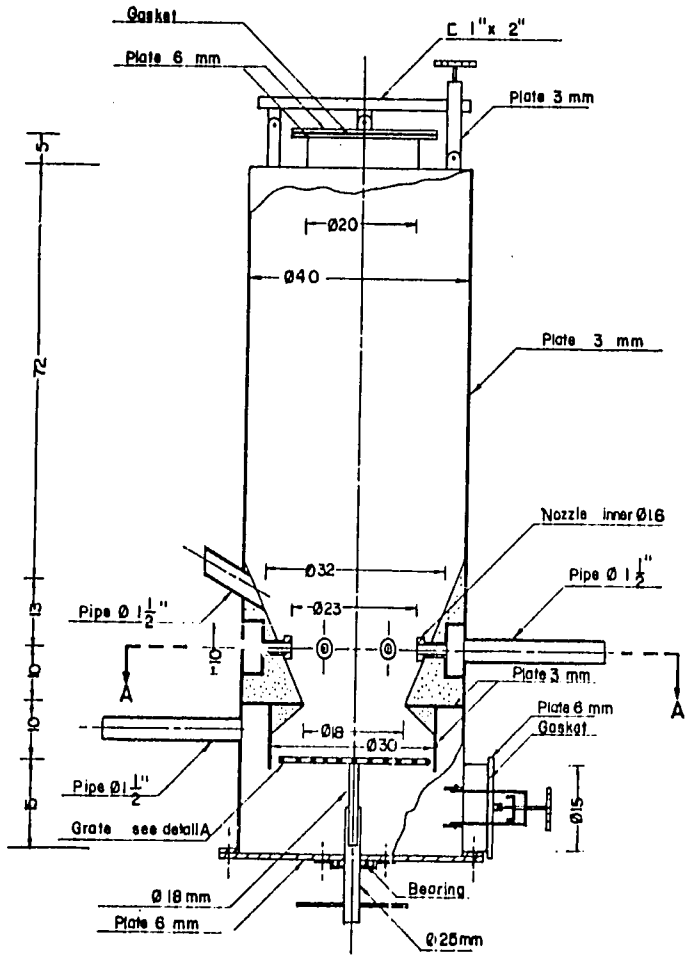

Figure 3.7 - 7 h.p. Gasifier (Unit Number 3)
Downdraft Charcoal Gasifier

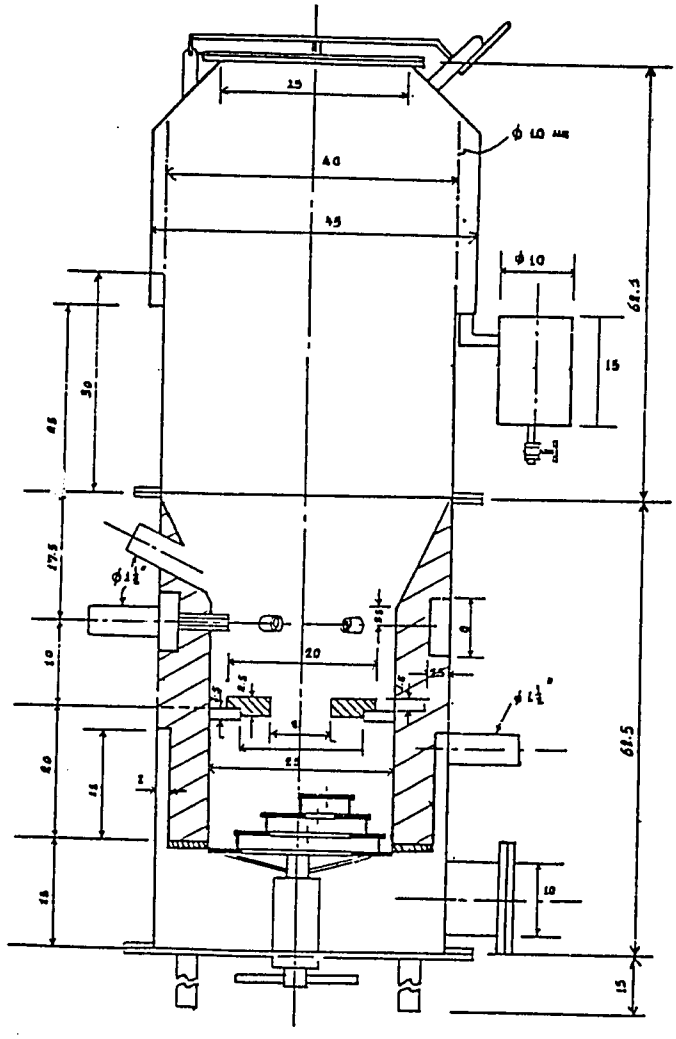

Figure 3.8 - 16 h.p. Gasifier (Unit Numbers 1 and 2)
Downdraft Wood Gasifiers.

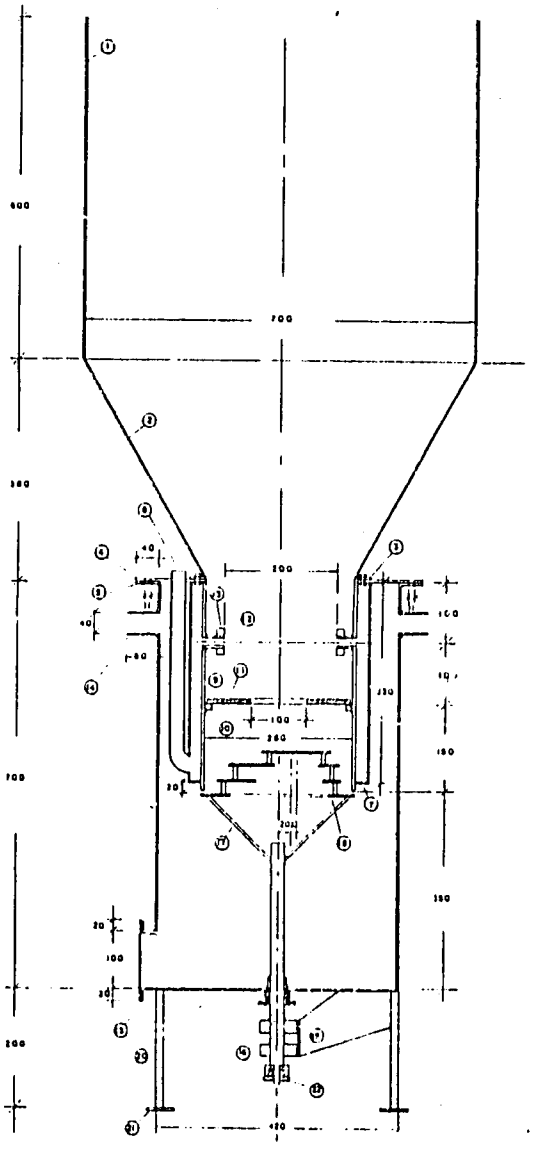

Figure 3.9 - 25 KWe Gasifier - Downdraft Wood/Corn Cob Gasifier

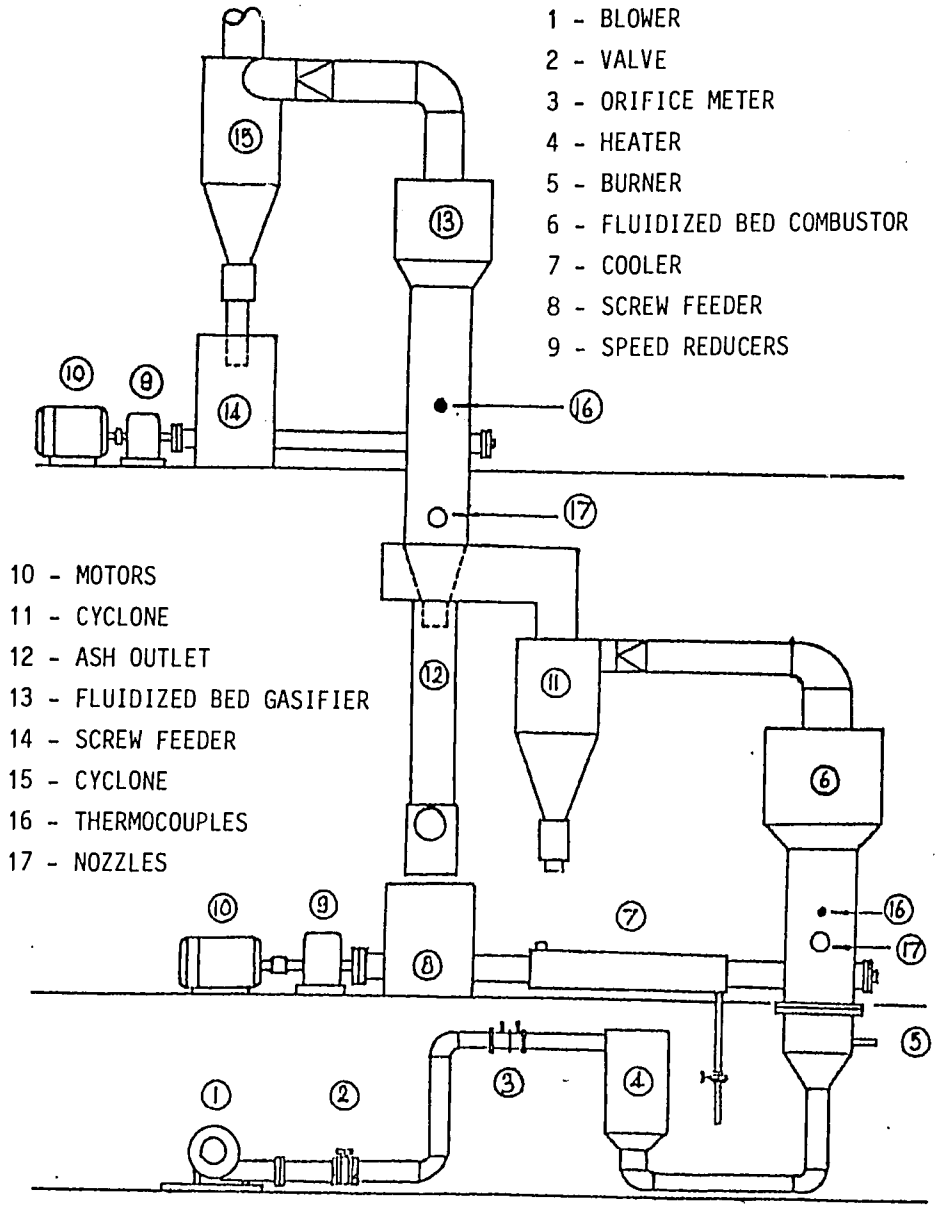

Figure 3.10 - Fluidized Bed Gasifier (Unit Number 1)

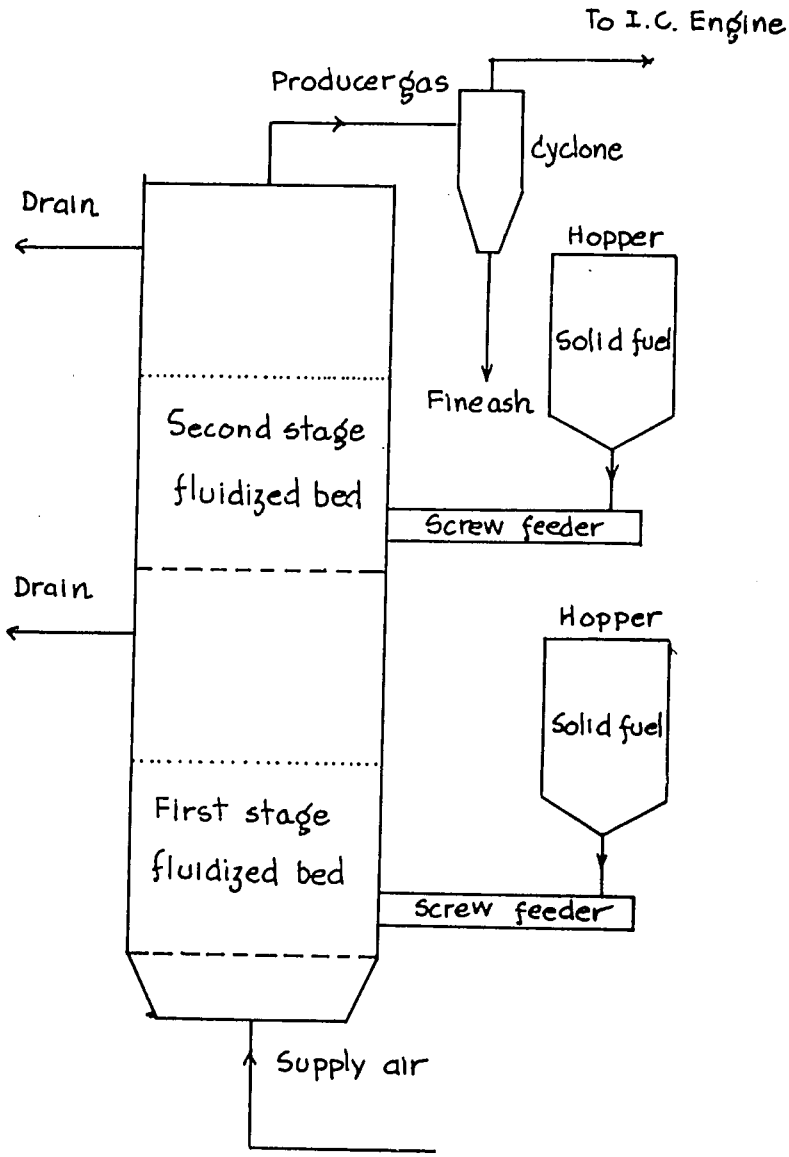

Figure 3.11 - Fluidized Bed Gasifier (Unit Number 2)

Previous Page Blank

Chapter 4

Experimental Techniques and Procedures

Previous Page Blank

EXPERIMENTAL TECHNIQUES AND PROCEDURES

This chapter is concerned with the construction, testing, and implementation of the various gasifier systems in the project. This chapter also mentions some of the other activities that were undertaken in support of the overall project.

A. THE 500 We GASIFIER (UNIT NUMBER 1)

The Charcoal gasifier system was built according to the detailed sketches presented in the appendix. The design is downdraft with a single central tuyere. The gasifier system included a 5 hp Honda gasoline engine on which was attached a 2 KVA electric generator. The entire system is shown in Figures 4.1a and 4.2b. The final report is presented in the Annex. The main points that should be mentioned are as follows:

- The construction of the equipment uses material that can be obtained in Thailand. Care must be taken to purchase heat resistant cement for internal gasification chamber application as shown in the sketch in the Annex. Care must also be taken in selecting the central tuyere, as after a certain number of operating hours, the tuyere has a tendency to deform due to the heat exposure. Although this particular unit did not use a stainless steel central tuyere, the use of stainless steel would eliminate the problem.

- The major feature determining gas quality and efficiency of operation is the distance from tuyere to grate which for this design was set at 22.5 cm. The basis for this figure is the experience developed at the Prince of Songkhla University and depends upon air flow rate and size of charcoal particles. Due to the unavailability of a carbon monoxide-hydrogen analyser, the various parameters of operation and this one in particular had to be estimated from experience.

- The gasifier system designed for 500 We was able to deliver 800 We with the engine chosen. The engine capable of producing 2 kWe with gasoline was derated to 800 We when using producer gas.

The gasifier was then taken to an implementation site (Annex 6) and the local operators were trained in the unit's handling and operation. The local operators were finally able to perform all the various tasks connected with the handling and operation of the gasifier as follows: wood branches collection, manufacture of charcoal, start-up of gasifier, tune the air-gas valve as load is being increased, perform the daily weekly and other maintenance chores.

The implementation program started in May 1983 indicates that the program has received a certain amount of success as the unit was still being used as of February 1984. The complete report may be found in the above mentionned Annex.

Previous Page Blank

B. THE 500 We GASIFIER (UNIT NUMBER 2)

This 500 We charcoal gasifier is an updraft gasifier and was built according to the details presented in the Annex. The gasifier system included a 5 hp 192 c.c., one cylinder Honda gasoline engine complete with governor, and connected to a 2 KA electric generator. The unit was equipped with a governor that was able to regulate fuel input with changes of load. The entire system is shown in Figure 4.2. Following the gasification chamber the gas passes through a cyclone, a stone impingement filter, a cloth filter, and a safety filter. The final report and the blueprint of the unit are presented in the Annex.

- The construction features of the updraft gasifier are the same as unit number 1 concerning the use of locally available material. Unlike unit number 1 this unit has no tuyeres and hence no problem of tuyere deformation due to excessive heat. This unit was also designed not to need a cooler system as it was found that the existing piping and exposed metallic parts were sufficient enough to cool down the gas to an acceptable level.

- Due to redesign in the start-up system it was possible to start this unit within 10 minutes, using a trained operator. The start-up details are presented in the Annex.

The testing program of this updraft gasifier had for its original aim to determine whether an updraft gasifier could be made to operate smoothly and whether the gas obtained was clean enough to operate an engine. This phase took no less than 100 hours of testing the gasifier with redesign between tests. The method used to check charcoal consumption was to place the entire unit on a balance capable of weighing up to 500 kg loads and obtain charcoal consumption by weight differences. The quality of the gas obtained, using different cleaning train systems as explained in more detail in the Annex, was done very qualitatively by taking the Honda engine apart and inspecting it for deposits. The engine given was obtained by placing in varying electric loads and measuring the resulting voltage, then determining at what power output the generator was still able to give a voltage of 220 V. For purposes of having an idea of gas quality and orsat apparatus was used to measure concentrations of CO, CO_2, O_2 of the producer gas. Temperature inside the hearth were also measured be direcrt levels of temperatures were being reachedk. No implementation progra,s were being envisaged for this unit until satisfactory testing could determine that the unit was technologically viable. During testing it was also not the idea to optimize the unit until the updraft charcoal gasification principle could be shown to be able to produce a gas easily cleaned for engine use.

C. THE 500 We GASIFIER (UNIT NUMBER 3)

This charcoal gasifier system was built according to the detailed sketches presented ;in the Annex. The design is downdraft with six side tuyeres with corresponding side air inlets. The main difference between this unit and unit number one is that the central tuyere concept was eliminated and replaced by six side tuyeres directly opened to the atmosphere based on the reasoning that central tuyeres tended to deform after so many hours of operating. This side tuyere design would, it was hoped, last longer. The gasifier design as described in the Annex has the

following sequence: gasifier - stone impingement filter - rice husk filter - 5 hp gasoline engine - generator. As for other gasifiers, the material of construction is entirely local. The distance between tuyere to grate was designed to be 20 cm, or some 2.5 cm shorter than the distance from the central tuyere of unit one to the grate. The main testing program centered around making the system operate rather than to seek precise scientific data. One important aspect was to construct a system which would start-up easily. A second aspect was to obtain a gas that could fuel an engine and maintain the engine clean. We chose to do this by operating the engine for a number of hours and opening up the engine for inspection to look for solid and liquid deposits. To determine charcoal consumption the entire unit was lifted on to a balance and fuel consumption measured by weight loss during operation. A Gas quality test was performed to check whether the gas quality came close to known producer gas compositions and one gas quality measure was taken at the optimal operating condition (the maximum power output at 220 V). No implementation program was performed for this unit as the concept of this unit was based on improving previous designs.

D. THE 500 We GASIFIER (UNIT NUMBER 4)

This central tuyere downdraft charcoal gasifier has the same concept as unit number 1. The unit was built according to detailed sketches presented in the Annex. A picture of the unit is presented in Figure 4.3. This unit was designed based on experience obtained from the previous three units. The gasifier cleaning train not shown in the sketches of the unit has the following sequence: gasifier - cyclone - stone impingement filter - rice husk filter - cotton safety filter - 5 hp gasoline engine - generator. As with the other four gasifiers the material of construction is entirely local. The main differences between unit number 4 and unit number 1 are distances between tuyere to grate which was reduced to 18 cm, the diameter of the slight throat which was increased to 16.5 cm, the removal of the cyclone and the air cooler.

The main objective of construction and testing program was to engineer a system that could produce electricity in the 500 We range and deliver a gas clean enough to operate the engine over a long period of time. Again the main methodology followed was to operate the system and directly inspect the engine combustion chamber. Consumption of fuel was done as previously by placing the entire unit on a large balance and measuring weight loss. As this report is being written the unit had been borrowed by a Thai Government Agency in order to test the operation of the unit in a rural site.

E. THE 7 HP GASIFIER (UNIT NUMBER 1)

This downdraft no-throat uncarbonized fuel gasifier was constructed according to the sketches presented in the appendix and is shown in Figure 4.4. The principle of this unit is based on the concept of batch gasification in a straight pipe gasifier of 4 inches internal diameter. The operating technique is to ignite the bottom of the gasifier and allow the air in through the top. As gasification takes place the oxidation zone goes up and after a certain time the combustion surfaces at the top and gasification stops. The principle is now at the development stage and has been attempted for rice hulls (32,33) but no information is available for

other crop residues. The proposed advantages of such a gasifier system are its low cost, low solid particle flow resistance, open top design, and possibility of modeling the system mathematically. The possible disadvantage is excessive tar formation. This work is thus seen as an exploratory research into a novel gasification principle which may have potential applications for shredded crop residue gasification. The report of some initial runs have been presented in the Annex.

F. THE 7 HP GASIFIER (UNIT NUMBER 2)

This downdraft charcoal gasifier was designed to produce 2 kWe. Figure 4.5 shows a picture of the unit under testing. The details are shown in the Annex. This unit is a size above the 500 We systems and is a natural scale up of the 500 We designs. Direct scale up cannot be made for a variety of reasons, especially at the tuyere level where for such a system it was judged better to install six side tuyeres connected to a single air inlet rather than a centrally located vertical tuyere. Again in this design the construction of equipment used material obtainable in Thailand. The construction included a grate that could be moved up and down; during testing the distance between grate and tuyere was changed until the optimal distance was obtained using as a measuring device the electric loads that were connected to the generator. The testing program was based on visual inspection of the various parts of the gasifier system. This was the main procedure used in most gas quality testing in this project. The final report in the appendix gives a complete report of what was done. This unit has yet to be tested at a testing site for a long period of time or to be directly implemented.

G. THE 7 HP GASIFIER (UNIT NUMBER 3)

This downdraft charcoal gasifier was designed to operate on a dual fuel mode with a 8.5 hp diesel engine. The details of this unit are presented in the annex. This unit has a size almost as large as the 7 hp gasifier (unit number 2) but not large since the gasifier was designed to supply gas on a dual fuel mode. The tuyere entrances were of similar design as unit number 2. Again for this design the construction of equipment made use of locally available material. The main point of interest in this unit was to determine the amount of diesel fuel that could be replaced at various loads and rpm. The final report in the Annex gives an account of what was obtained in the test runs. No implementation programs were earmarked for this unit.

H. THE 16 HP GASIFIER (UNIT NUMBER 1 AND 2)

This downdraft wood gasifier (unit number 1) was designed to generate electricity in the neighborhood of 10 KWe. Figure 4.6 shows unit number 2 being built (both units have the same gasifier design). This gasifier design has a total of six tuyeres connected to a single air entrance pipe and as shown in Figure 4.6b has a choke plate designed to force the tars through restricted passage (unlike the charcoal gasifier concept where the throat is much wider for a given size of gasifier) and force tar cracking into a gaseous product. The main design factor of this gasifier is whether the gas will be sufficiently tar-free to clean with a relatively simple cleaning train and guarantee its use in an internal combustion engine. The report in the Annex will give an account of what was done. This unit will

eventually be implemented in a rural site as time did not allow this to be done in this present project.

This downdraft wood gasifier (unit number 2) was designed similarly to unit number one and was meant to operate an engine attached to a water pump. The design of the gasifier itself is exactly the same as for unit number 1. Again the main design factor of this gasifier is whether the gas can be produced sufficiently tar-free to clean with a relatively simple cleaning train and guarantee its use in an internal combustion engine. The report in the annex will give an account of what was done. This unit will also be implemented in a rural site as time did not allow this to be done in this present project.

I. THE 25 kWe GASIFIER

This downdraft wood/corn cob gasifier was designed to operate a 40 hp diesel engine on dual fuel mode. Figure 4.7 shows a picture of the final design of the unit operating on wood. The final report of the construction and testing phase is presented in the annex. The main emphasis of the testing phase with the unit operating with wood was to measure what diesel fuel replacement could be achieved. The next item of interest was the quality of gas entering the diesel engine using visual inspection in the piping system leading to the engine. This unit has yet to be tested over a long period of time using wood. It was originally designed to be implemented in a rural site but due to time constraints the implementation phase had to be reported.

J. THE FLUIDIZED BED GASIFIER (UNITS NUMBER 1 AND 2)

This rice husk fluidized bed gasifier (unit number 1) designed to produce process heat is shown in figure 4.8. The construction and testing report of this gasifier is presented in the annex. The operation and testing of the gasifier was meant to explore the possibility of utilizing the design to gasify a crop residue such as rice husk. No implementation programs had been earmarked for this unit as this size would be too small to be economically feasible on an industrial installation. However, the results obtained would help formulate suggestions on future industrial scale implementation programs.

This rice husk fluidized bed gasifier (unit number 2), originally meant for process heat, was built to operate an engine. The design of this gasifier shown in Figure 4.9 is different from unit number 1 in that both columns have been placed in the same column. Again the operation and testing of the gasifier was meant to explore the possibility of utilizing the design to gasify a crop residue such as rice husk. The final report of the construction and testing phase is presented in the annex. Again no industrial scale implementation programs were planned for this particular unit due to its small size. However the results obtained together with the results of unit number 1 would help formulate suggestions on future industrial scale implementation programs.

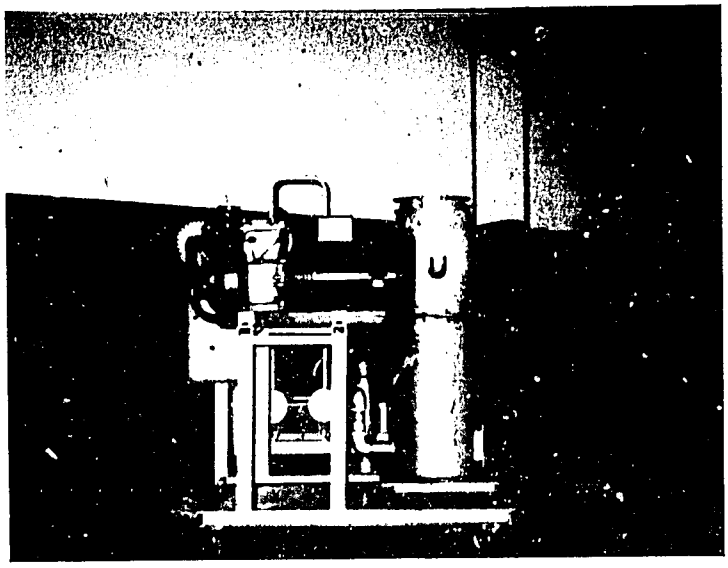

Figure 4.1 a - 500 We Gasifier (Unit Number 1)
Downdraft Charcoal Gasifier

Figure 4.1 b - 500 We Gasifier (Unit Number 1)
installed at implementation site,
Songkhla Province

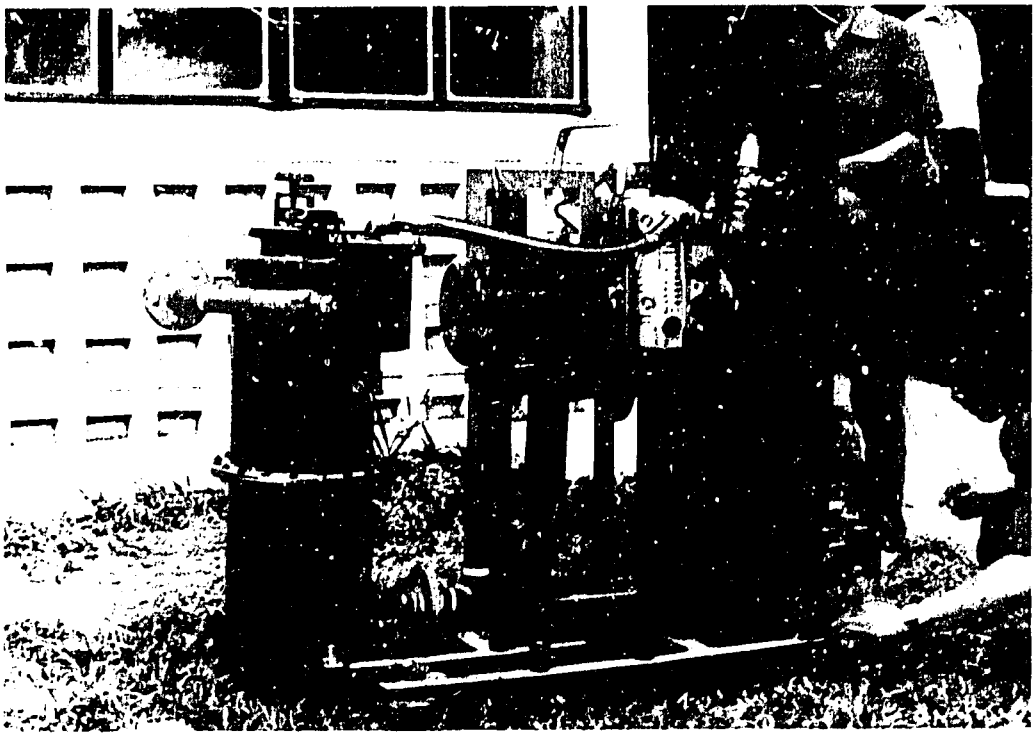

Figure 4.2 - 500 We Gasifier (Unit Number2) Updraft Charcoal Gasifier

Figure 4.3 - 500 We Gasifier (Unit Number 4)
Downdraft, charcoal, central tuyere design.

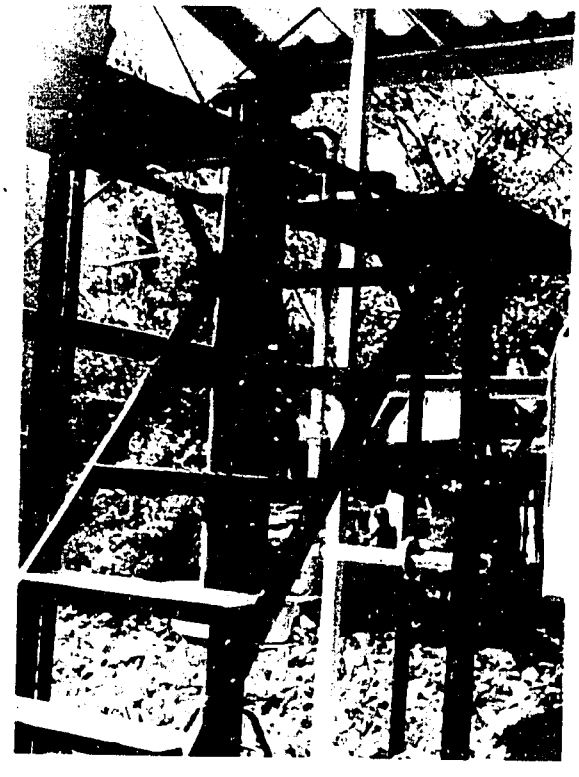

Figure 4.4 - 7 HP Gasifier
(Unit Number 1)
Downdraft, no throat design.

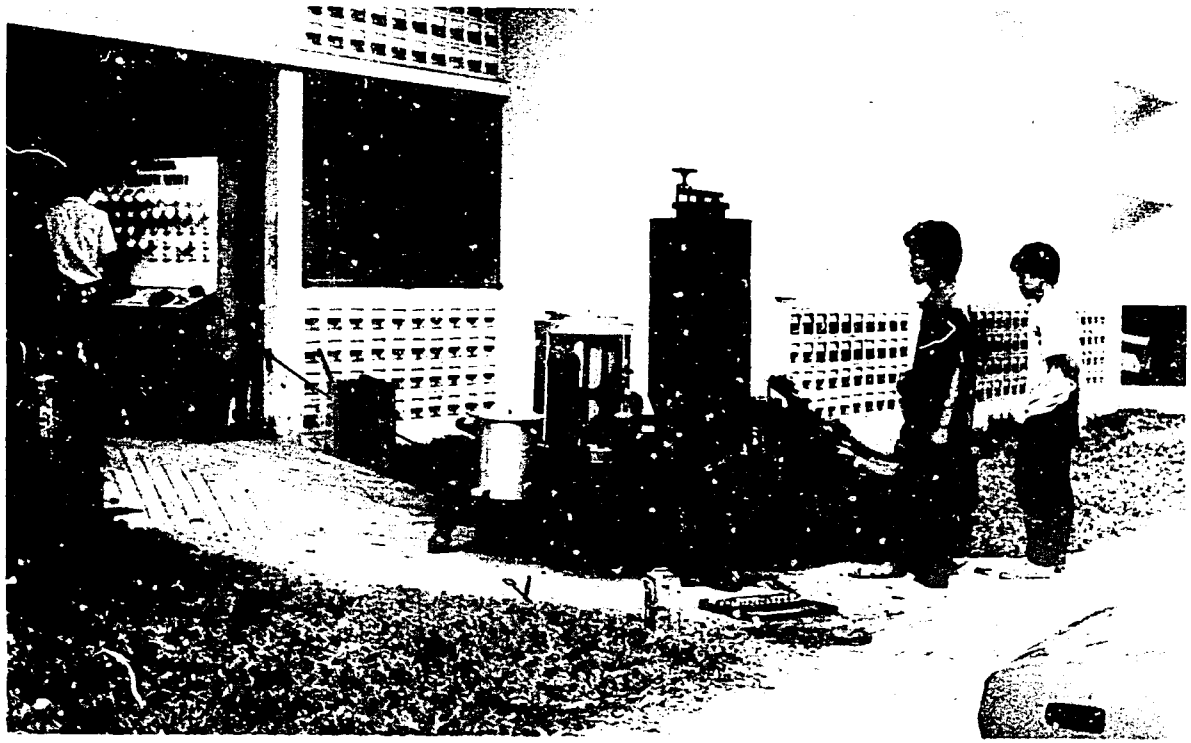

Figure 4.5 - 7 HP Charcoal Downdraft Gasifier
(Unit Number 2) producing 2kWe electricity.

a

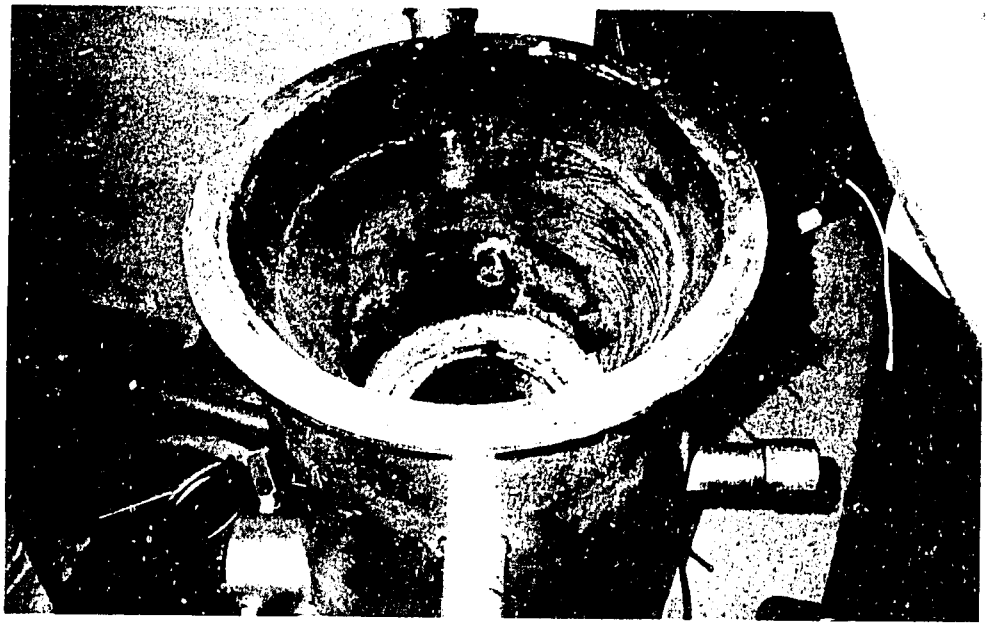

b

Figure 4.6 a,b - The 16 h.p. gasifier (Unit Number 2) under construction.

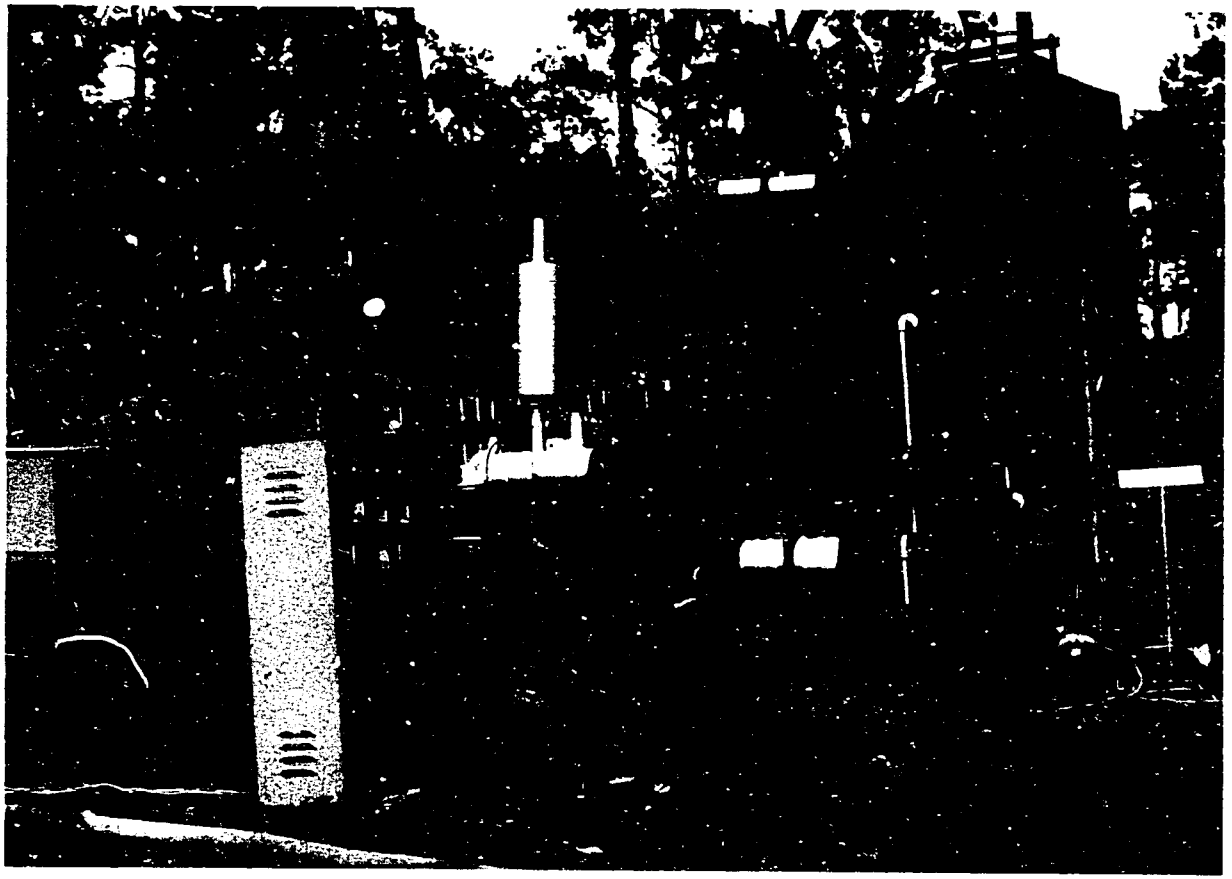

Figure 4.7 - 25 kWe Gasifier Downdraft Wood/Corn Cob Gasifier.

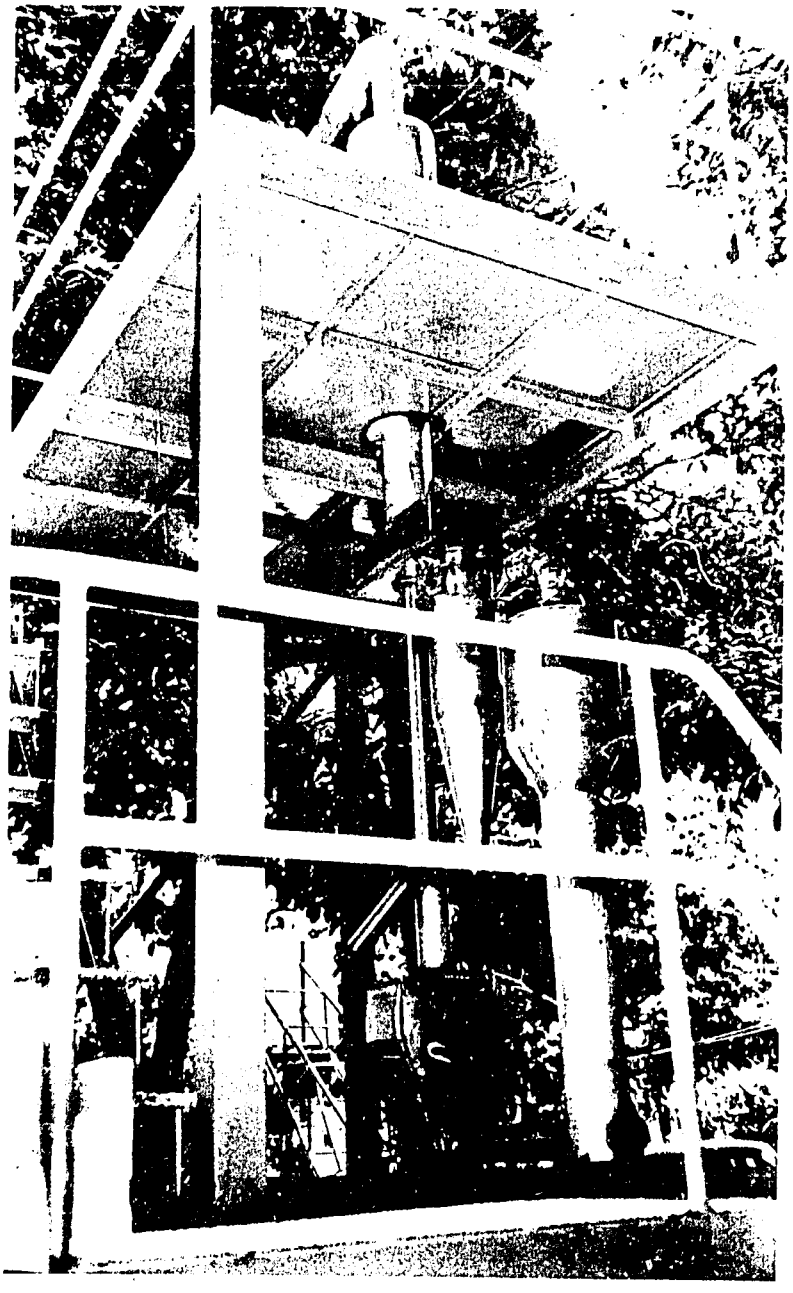

Figure 4.8 - Fluidized Bed Gasifier (Unit Number 1)
Rice husk fluidized bed gasifier.

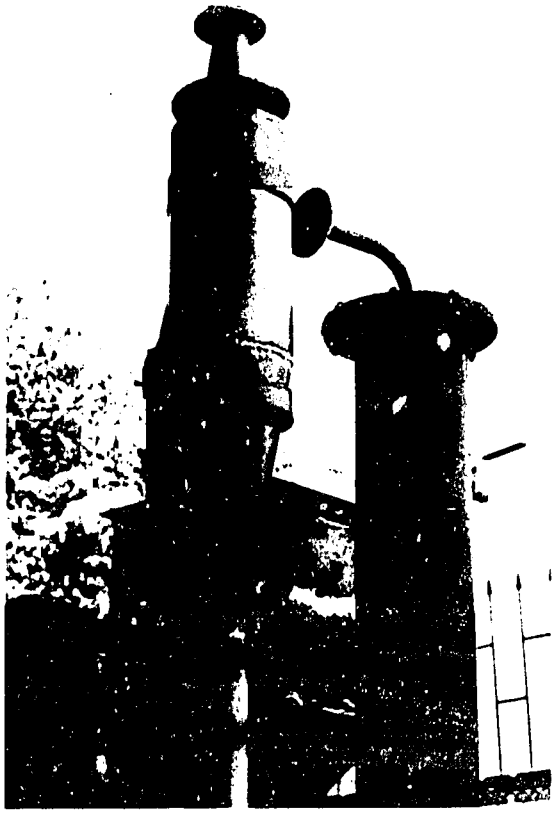

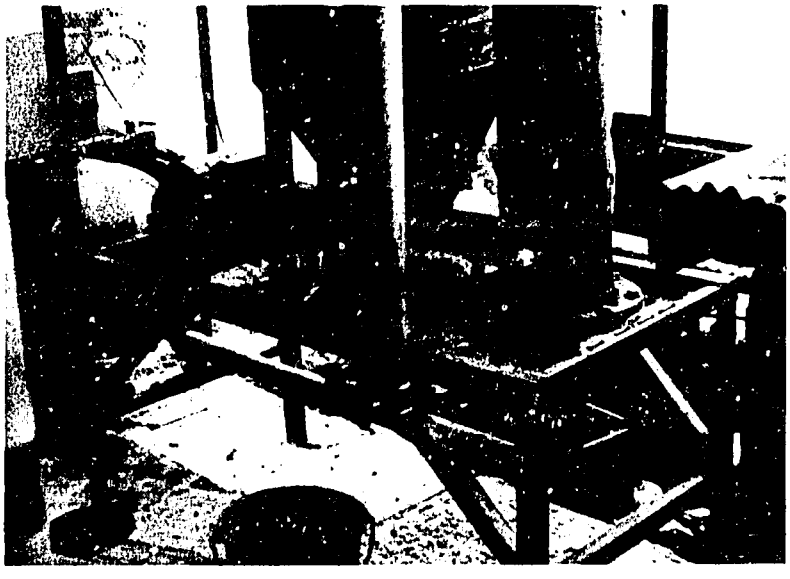

Figure 4.9 - Fluidized Bed Gasifier (Unit Number 2)
Rice husk fluidized bed gasifier.

Chapter 5

Presentation and Analysis of Results

Previous Page Blank

PRESENTATION AND ANALYSIS OF RESULTS

In this chapter the objectives of the project relating to each of the five gasification systems will be restated in a general manner and an analysis of what was obtained in the project presented. The analysis of what was obtained will also include items of high interest that either were covered in the original objectives but were not achieved in this project or items that were not specifically covered in the original objectives.

In addition to the primary objectives of the project dealing with the five gasification systems, mention will be made of the development of an R & D unit in the general area of biomass with emphasis on biomass gasification at Chulalongkorn University.

A. THE 500 We GASIFIER SYSTEM

Based on the fact that a microgasifier capable of producing 500 We of electricity did not exist anywhere, the objective of the project was to build one using either wood or charcoal as fuel. The main user target group would be the single, remote household (or extended household) where wood and or charcoal would be available. The specific objectives were to design, build, test, and implement such a system.

Based on the development of four prototypes detailed in the annex as units number 1 to 4, the four specific objectives relating to design construction, testing and implementation of the 500 We system were met. The significant results may be presented as follows.

The overall system

A charcoal gasifier producing at least 500 We at a voltage of 220 V using 5 hp one cylinder gasoline engine can be built. The cost of material of the gasifier itself depending on the specific design may be 5,000 baht upward. The cost of the engine-generator set is in the neighborhood of 6,000 baht including governor (care must be taken to choose a generator that is able to maintain a steady RPM with governor action, which is not the case for a large percentage of such units sold in Thailand). The consumption of charcoal is estimated at between 1.9 to 2.0 kg/kWe-h at loads between 500 We and 800 We. However, at loads below these maximum values, the savings in charcoal consumption is not substantial.

An economic analysis indicates that based on a charcoal cost of 2 bahts/kg the fuel cost for electricity generation is four times less than gasoline. Based on an operation of 10 hours a week (2 days at 5 hours a day every week) the electricity is more expensive than electricity from the grid (if it were available). This is based mainly on the interest rate of the capital investment to purchase the unit and the low utilization hours per year. Of course the gasifier system is more economic at than gasoline.

The technical details

A comparison of the concepts of downdraft central tuyere, downdraft,

Previous Page Blank

and downdraft side tuyeres indicates that for practical reasons the concept of downdraft central tuyere is superior. Also on such microgasifiers it is not necessary to provide an air cooler as cooling load is small and is done by direct heat dissipation in the cleaning train.

The overall manpower required to cold-start the unit ranges from a maximum of 20 minutes to a minimum of about 9 minutes, depending on specific designs and the efficiency of the operator. The length of time and the ease of start-up procedure has been reported to be important for operator acceptance. Maintenance and start-up procedures take a yearly average of 1 hour per operating day for some of the units developed, whereas gasoline use requires negligible maintenance and start-up time.

The implementation of unit 1(on which we have a report) and the present use of unit 4 in rural Thailand(on which we have yet to receive a report) indicates a great deal of interest in the microgasifier.

The analysis of the results and comments with respect to what should be done in the future may be summarized as follows.

Dissemination of the Technology

The result of the implementation program and the interest in the microgasifier indicate that there should be an attempt at disseminating the unit in rural areas. The target groups should be unelectrified rural households with availability of charcoal or wood. Various means of dissemination would include the following: demonstration of the units in the rural energy centers, selection of rural households and giving away units for implementation, training local villagers to build such small gasifiers at the rural energy centers. The problems that such dissemination programs will confronted are the cost/benefit aspect on behalf of the user, the manufacture of the charcoal in the event the operator does not have charcoal available, the sizing of the charcoal into pieces not greater than 3 cubic inches, the skill of the operator at starting up and doing maintenance work on the unit, daily time allotted to starting up and maintaining the unit, perhaps lack of follow-up servicing activities, and the lack of standardization of the various parts. Only after a relatively successful implementation program of several units will private companies or other organizations we feel become interested in constructing and selling such gasifers.

Research and Development Aspects

The microgasifier has yet to be optimized with respect to a number of factors: size of carbon pieces with height of reduction zone to minimize unreacted charbon loss at the grate, determination of water content (in air, in charcoal, as additional water) for optimal gas calorific content (CO, H_2, CH_4 dertermination), increased efficiency of gas cleaning for the same level of technology, a technique to dehydrate the gas to prevent engine corrosion, a quicker start-up time for the operator.

The quality of charcoal used in a gasifier is important. There are two conflicting aspects. Firstly, a charcoal with low volatile matter will result in low levels of tars. Secondly, a low volatile charcoal contains the least percentage of energy based on the energy content of the

original wood; thus, in this respect it is least efficient. We do not know what quality charcoal makes a good compromise for each charcoal gasifier. However, if we had charcoal gasifiers operating in the thousands, knowing the worst quality (with the most volatiles but highest calorific content of the original wood) of charcoal to be used for each gasifier would be greater energy conversion efficiency on a nationwide scale. The result of such a study could result in a new approach at gasification based on a semicarbonized wood retaining most of the energy content in the wood and without some of the volatile matter.

B. THE 7 HP GASIFIER SYSTEM

The basis behind this 7 hp gasifier system was that no general fixed bed crop residue gasifier existed, and although we know that the development of such a unit would be difficult, we felt that it was worth trying. This unit was named unit number 1. During the length of the project there happened to be a demand for two gasifier systems in this range of power, and units number 2 and 3 were eventually built using charcoal as fuel.

The 7 hp Gasifier (Unit Number 1)

The significant results of the design, construction, and initial testing phase of this crop residue gasifier may be presented as follows:

> Based on a batch gasification concept using a downdraft, straight tube gasifier it was possible to gasify fresh hammermilled corn cobs. The calorific content of the gas was however somewhat below the quality of a charcoal gasifier. The tar content of the product gas was too high for engine operation, especially in the range of equivalence ratio which is known to be appropriate for gasification (0 = 0.25 to 0.40).The operation of this gasifier indicated the creation of cavities in the fuel bed during operation caused by resistance to flow of raw material.

The analysis of the results and comments may be summarized as follows:

> The enhancing of gas calorific value and the minimizing of the tar production may be done through better understanding of the process occuring in the gasifier. This will require a proper modeling of the gasifier which will inevitably involve the study of temperature profiles inside the bed. Among parameters of importance in any subsequent study will be bulk density of fuel, water content of fuel, effect of reactor insulation.The mechanical flow problems of the fuel (in a batch reactor the decrease in biomass volume causes the fresh material on top to flow down to fill in the cavities) in such a gasifier may necessitate a mechanical agitation device in future systems.In a second level of experiments would be the testing of raw materials in the form of cubes or pellets, carbonized or uncarbonized, with low or high ash content (either collapsible or non collapsible cubes or pellets).Finally a continuous prototype should be built based on the results of the batch gasifier.

The 7 hp Gasifier (Unit Number 2 and 3)

The significant results of the design, construction, and initial testing phase of both charcoal gasifier systems may be presented as follows:

> Both units number 2 and 3 were able to produce a tar-free gas of high enough calorific content to operate engines with and generate electricity. Unit number 2 operating with a gasoline engine could be used to follow changes in loads up to 2 kWe with no particular problems as total governor action could be obtained. However, unit number 3 (operating with a compact yanmar diesel engine) was not able to automatically follow load changes unless an operator was present to manipulate the air inlet valve, but it was able to operate at steady loads. The diesel replacement ratio varied from 50 to 80%.

The analysis of the results and comments may be summarized as follows:

> Two gasifier systems of similar designs but not exactly similar details were made to produce 7 hp using charcoal as fuel. The testing of these units indicates that the gas produced may be cleaned simply and serve as fuel for internal combustion engines. Both of these units have each been tested over 100 hours and the next step is to implement them in the countryside. Further research and development of start-up and maintenance concentrated on mechanical details, more efficient air cleaning devices, appropriate size of charcoal, volatile content of the charcoal, optimiization of reduction zone length as a function of charcoal size, dehydration of the gas prior to engine use, and the study of influence of open top operation. Again it must be emphasized that an implementation program should be undertaken based on what has been achieved so far. A dissemination program would come shortly after a limited implementation program. A risks however are not high for a limited dissemination program as we have confidence that these units will work well.

C. THE 16 HP GASIFIER SYSTEM

The basis behind the 16 hp Gasifier System was to study the gasification of wood in this range of power. Thus 2 units one to produce electricity and one to pump water, were planned. Eventually at the end of this project, only one unit was tested (unit number 2) while the other unit (unit number 1) is currently under construction (August 1984). In the original program an implementation program had been earmarked but time did not allow an implementation program to take place.

The significant results of the design, construction and testing of unit number 2 may be presented as follows:

> The choke plate design of both units is able to produce a gas relatively tar free in comparison with other wood gasifier designs. A packed bed water scrubber gas cleaning system for gas from wood gasifiers seems to be able to clean the gas to engine grade levels. However some optimizations have yet to be made.

The analysis of the results and comments may be summarized as follows:

Before an implementation program is undertaken it is important that an extended testing program currently underway be done for a few hundred hours. The critical point is that no tars nor particulates enter the engine.It is important to design and build a tar and particulate measuring instrument in order to quantify gas quality in wood gasifiers along the cleaning train. This instrument, unfortunately, does not exist (as far as the author knows) but its principles are known. Using the choke plate designs of unit 1 and 2 it is very interesting to consider gasifying semi-carbonized wood of various volatile contents in order to be able to produce a gas which can be cleaned with a minimum of equipment. A total dissemination program is perhaps not yet appropriate at this stage for these particular units.

D. THE 25 kW GASIFIER SYSTEM

The final design of the 25 kW gasifier was a choke plate design that used wood chips as fuel. The reduction is equipped with a simple grid grate with no automatic rotating system. The gasifier was attached to a diesel engine generator system and was designed to operate on a dual fuel with full governor operation. The gas was then passed through a packed bed water scrubber and a filter.

The major results of the testing program may be summarized as follows:

The gasifier system was able to operate satisfactorily on a dual fuel. However, the gas quality (with regards to tars and particulates) could not be quantified, but the engine was able to operate for several hours, and visual observation of the pipes showed some traces of deposits but not excessive amounts. During dual fuel operation the maximum diesel fuel substitution was 40 percent.

The analysis of the results and comments with respect to what should be done in the future may be presented as follows:

The diesel fuel substitution of 40 percent of this unit is quite low compared to what may be done on other systems. The reason for this low substitution rate is not yet known. It would thus be worthwhile to optimize this system by systematically studying gas compositions and dual fuel governor operation. The efficiency of the cleaning system should be studied more closely by measuring tar contents and particulate contents. However, the measuring equipment would have to be made locally. A long-term testing program lasting several hundred hours should be undertaken to finalize the optimisation of the system. This should be followed by an implementation program. We do not think that a dissemination program would be called for at this stage or in the near future as the technology of such a large gasifier has not yet been mastered. Also the problem of wood availability and wood preparation would be a problem for dissemination programs.

E. THE FLUIDIZED BED SYSTEM (UNITS NUMBER 1 AND 2)

The design, construction, and testing of the two fluidized bed designs already presented had for itsaim firstly, to study the principle of crop residue fluidized bed gasification in a pilot scale unit; and secondly, to get involved in the nuts and bolts aspects of fluidized bed construction so to appreciate the ease or difficulty to scale up the units several times, say 10 or 20 times.

The main results may be listed as follows:

> Unit Number two was able to obtain a proper gas but perhaps with a little low CO content (maximum of 18% CO). The operation of the gasification (despite some early problems of husk clogging beneath the upper distributor) was smooth. No data, however, was obtained on unreacted carbon in the ash. The rice husk feed rate for the lower and upper stages were 13.2 kg/h and 10.8 kg/h respectively (Based on no heat losses this is equivalent to about 360,000 Btu/h). Unit Number two operated on a feed rate of 3 to 4 kg/h of rice husk to the combustion chamber and 4 to 5 kg/h of rice husk to the gasification chamber. Although gas compositions were not available to the component leader at the time of editing of the report (August 1984), the percent conversion of carbon in the combustion chamber was 90% whereas the conversion of carbon in the gasifier chamber was only 40%.

The analysis of the results and comments with respect to what should be done in the future may be summarized as follows:

> Units Number 1 and 2 have demonstrated that fluidized beds may be used to gasify rice husk and probably other crop residues as well. Both units do not seem to be optimized, however, it is believed that both can be optimized with additional effort. Units Number 1 and 2 having not been optimized at the present time, it is difficult to envisage the local engineering of an economic scale plant, let us say half a megawatt. One problem is the local availability of components for a large fluidized bed gasifier such as air tight rotary valve feeders, etc. The fluidized bed option offers on instantaneous and technically feasible crop residue gasification possibility. The technology is known to exist in the United States. As appropriate follow up project should be the custom manufacture of a fluidized bed gasifier with US technology. This would be implemented in a Thai rural factory for process heat applications with consultant input both from the US and Thailand. The main item would be to demonstrate economic viability.

F. THE BIOMASS GASIFICATION R & D UNIT IN CHULALONGKORN UNIVERSITY

he biomass gasification component has enabled Chulalongkorn University to become involved in research and development in biomass conversion technologies, particularly biomass gasification. The component has collected a huge amount of up-to-date information on the subject,and a certain amount of experience on the subject, both as hands-on experience and as a theoretical consideration of gasification. The

component, furthermore, has some equipment with which to function as a laboratory to support research and development projects by faculty members and students and in support of outside agencies dealing with gasification. It is the hope of the biomass gasification component to be able to contribute to the technology in the near and distant future for the development of Thailand and other developing countries.

G. COMMENTS ON GASIFIER IMPLEMENTATION STRATEGIES

During the course of the project the biomass gasification component leader has been concerned with gasifier implementation programs that Thailand may adopt in the future. The component leader has had the opportunity to see the Philippine gasifier program firsthand and has read developments in Brazil. The component leader has also participated in this project which called for the development of five gasifier systems and has some experience on the problems, limitations and opportunities of research and development activities.

The component leader sees two possible development strategies and the possible positive and negative aspects of these two strategies. The first strategy is a 'laissez faire' strategy. The second strategy is an 'integrated gasifier development' strategy.

The 'Laissez Faire' Strategy

This strategy will consist in doing what is currently being done, that is leaving the various government agencies dealing with gasifier development conduct their own development and limited implementation work in the hope that interesting designs will be invented and be disseminated little by little. The positive aspects of this strategy are that private entrepreneurs may become interested in the technology and create a new industry in Thailand. On the other hand, lack of success in gasifier implementation projects handled by government organizations may inhibit people's interest in gasification technology. This strategy has a high risk of failure in the common goal of wanting to convert biomass into metric tons of oil equivalents. Another Furthermore, the development of gasifiers (be it privately developed or developed by an unorganized number of government agencies) may put pressure on our remaining dwindling forest resources by implementing wood or charcoal gasifiers in certain areas of the company's or the government agency's choice without prior approval from a better informed body.

This strategy, instead of pulling together research and development personnel, already scarce in Thailand in the field of gasification, serves to create research and development duplication, lack of communication with researchers, and prevent a 'critical mass' to be reached that would allow for optimal development and dissemination of the technology at the National level.

The 'Integrated Gasifier Development' Strategy

This strategy will consist in the creation of a central gasifier construction and implementation service facilities, including a gasifier development facility. This central gasifier organism would provide'

planning of gasifier implementation programs, construction or construction supervision, financing chores, implementation, some research on gasification, and most hardware development work. It would consider benefit to cost criteria as being the creation of MTOE with the least investment but within environmental constraints. This central gasifier organism would coexist with other research and development programs and would oversee and support all implementation programs. This organism would operate with a government budget every year but would also be able to receive aid from foreign donors. This organism would see to it that other research and development teams would be given research funds to operate constructively in a common effort.

The positive aspects of this strategy is that it centralizes all the gasifier effort, both in terms of research and development as well as implementation. With such a sense of direction can MTOE's be created and have a national impact. This is in a sense tne direction chosen by the Philippines since shortage of wood made gasification an unprofitable venture for private industry. This is not the direction chosen by Brazil which found itself developing gasifiers through its private industry, probably because Brazil has no shortage of wood.

One negative aspect of this strategy is the management of such a Government-owned organism. Another negative aspect is the possibility of insufficient funding which could cause it to fail.

The biomass gasification component leader prefers strategy number two but questions the management system of the organism which, if badly managed, would be worse than strategy number one.

Chapter 6

Conclusions

Previous Page Blank

CONCLUSIONS

The following conclusions may be presented based on the work undertaken by the Biomass Gasification Component in the development of several gasifier systems.

Charcoal Gasifiers

Charcoal gasifiers producing half a kilowatt of electricity have been developed and implemented successfully. Gasifiers producing in the range of seven horsepower have also been developed and tested successfully but not yet implemented.

Crop Residue Gasifiers

Research into novel fixed bed downdraft gasifiers using corn cob pieces has shown the possibility of developing a simple geometry gasifier that may eventually be able to gasify a variety of low ash content and high ash content shredded crop residues.

Wood Gasifiers

Choke plate downdraft wood gasifiers developed and tested in this project indicate that such a gasifier design has almost reached the point of being able to produce a comparatively tar-free gas. Furthermore such a gas can be cooled and cleaned in a packed bed water scrubber. However, both reactors and scrubber need to be further optimized in the laboratory.

Fluidized Bed Gasifiers

The fluidized bed gasifiers of up to about 20 kw, designed, built and operated in this project, indicate that rice husk can be gasified, although data from both pilot units built indicate that the units have not been fully optimized. The complexity of operating such systems means that a unit of less than half a megawatt,for example, would probably be uneconomical and the development of such a large fluidized bed gasifier would require hardware inputs from abroad and use of both foreign and local expertise.

Chapter 7

Recommendations

Previous Page Blank

RECOMMENDATIONS

The recommendations that the Biomass Gasification Component wishes to make from the project results and the experience gained during the project may be presented as follows:

The Dissemination of Small Charcoal Gasifiers

Based firstly on the development of microgasifier systems from sizes ranging from 500 Watts of electricity to systems producing in the neighborhood of 7 hp of shaftwork, and with some limited implementation experience, and based secondly on the appraisal of low negative impact on wood resource depletion in certain areas of rural Thailand, it is the recommendation of the component leader that a dissemination program be undertaken.

One dissemination strategy that may be undertaken at low cost is the training of villagers in the construction of charcoal gasifiers either in Bangkok or at the rural energy centers.

The Development of Wood Gasifiers

The various phases of wood gasifier development should include the following items:

- Laboratory research and development of a wood gasifier system to obtain optimized systems should be encouraged including long term testing and implementations.

- Since wood gasifiers are generally designed for applications which generate shaft power up to several hundred horsepower, also utilizing up to several hundred kilograms of wood chips per hour thus creating an environmental problem, it is very much necessary to tie in a wood production and preparation system with each wood gasifier implementation and dissemination program.

- In order to minimize still further tar production from a wood gasifier, it is very interesting to study the use of semi- carbonized wood as a wood gasifier fuel. Likewise, to increase general conversion efficiency of charcoal gasifiers, it is very interesting to study the use of semi-carbonized wood as a charcoal gasifier fuel.

The Development of Fixed Bed Crop Residue Gasification

Due to the non-use of Thailand's agricultural crop residues, it is important to promote biomass conversion technology that would enable farmers to gain additional income from such wastes and at the same time convert this biomass into useful energy. The gasification of crop residues in fixed bed gasifiers offers some prospects of successful development and research and development in that direction should be promoted.

The Development of Fixed Bed Direct Fire Gasifier Systems

One of the items of development not specified in the Biomass

Previous Page Blank

Gasification Component was the development of a wood or crop residue fixed bed, downdraft gasifier for direct fire applications. Such a concept not yet engineered in Thailand would seem to have wide use in small scale wood drying, agricultural crop drying, tobacco leaves drying, etc. The technology would appear to be less difficult then producing an engine grade quality gas as we would have less worries about tars which do burn in direct fire burners. Such a development direction should be looked at and worked on for subsequent work.

The Development of Crop Residues Fluidized Bed Gasifiers

Based on the results of this project it can be said that the concept of rice husk gasification is feasible. As a recommendation from this project the next step should be to build a small but economical scale gasifier (it is proposed that not less than half a megawatt thermal be considered) and use under utilized crop residues in a rural factory to test the economic viability of the system.

Proposal for a Gasification Technology Development Center

Based on the Biomass Gasification Component's experience acquired during the project, on the contacts with Biomass Gasification development teams in Thailand and on perceived future prospects of biomass gasification dissemination in Thailand, one recommendation proposed here is the creation of a central gasifier development facility. This center would coordinate research and development work through subcontracts to existing R & D teams and be solely responsible for overseeing planning and implementation programs. Failure to centralize activities relating to biomass gasification will result in duplication of efforts and much slower than optimal development of the technology.

ANNEX I

ANNEX 1

BIOMASS GASIFICATION WORK IN THE PHILIPPINES

The author visited the bioenergy activities in the Philippines in March 1983 and found that the Philippine biomass gasification program was the most extensive in Asia (Philippines Bioenergy Program Visit, 1983).

Description of the overall program: The political leaders of the Philippines decided that biomass gasification, as part of a national set of bioenergy activities, should be pushed ahead to propel the country towards energy self-sufficiency. The overall program may be divided into four parts: the setting up of dendroplantations for wood harvesting, the setting-up of rural charcoal making facilities, the setting-up of factories developing and producing gasifiers as an off-the-shelf item, and the implementation of such gasifiers mainly in rural areas of the Philippines.

The dendroplantations of the Philippines are manmade plantations of ipil-ipil managed by cooperatives. The fast growing ipil-ipil trees (leucaena leucocephala) are harvested after a year or two of growth depending on local rates of growth. The trees are then used to fuel a rural charcoal industry to be used for home cooking and for gasification. In mid-1982 the Government created the National Dendro Development Corporation (NDDC) to oversee national wood and charcoal prices from dendroplantations. The overall project called for the exploitation of 750,000 hectares of land, the construction of 75,000 one-ton charcoal kilns, and the manufacture of 70 million bricks a year for kiln construction for the duration of the project. This would generate employment for an estimated 240,000 families distributed as follows; 150,000 families each to look after 5 hectare woodlots, 50,000 families to produce bricks, 25,000 families to run the kilns, and 10,000 families to be involved in gasifier operation. The projected savings in petrodollars per year would amount to half a billion US dollars.

The success of the bioenergy project also hinges on the successful dissemination of charcoal gasifiers that create a demand for charcoal. The Philippines has made the decision to push the development and utilization of charcoal gasifiers (the bulk of which would be used for transportation, some of which to be used for irrigation systems, electricity generator systems, thresher uses, ice plant uses, etc). In mid-1981 the Government of the Philippines created the Gasifier and Equipment Manufacturing Corporation (GEMCOR) to build gasifiers. Then in early 1983 the Government set up the Philippines Dendro Gasifier Corporation (PDGC) which also deals with the manufacture of gasifiers. Eventually, both companies will manufacture 40% of the gasifiers to be used in the country. The project called for eventual construction of 500,000 units from 1983 to 1989 if the implementation of the entire project is a complete success. The Farm Systems Development Corporation (FSDC) which overlooks rural development, participates in all aspects of the national project from the national dendro energy development program to the production of charcoal and the implementation of gasifiers.

The gasifiers produced by GEMCOR (as of March 1983) were all downdraft designs and believed to be models developped from the Second World War

Previous Page Blank

European (and particularly Swedish) designs. All the units manufactured and sold by GEMCOR used carbonized fuels as raw material--in particular wood charcoal and coconut shell charcoal. The gas cleaning systems used for the various models consist of cyclones, gas scrubbers (for stationary applications only), and impingement filters. The gas cooling methods use water-cooling or air-cooling systems.

The 15 gasifier models built and sold by GEMCOR are as follows:

1.	10-30 HP	
2.	31-60 HP	irrigation system
3.	above 60 HP	
4.	10-30 HP	ricemill and dryer
5.	31-60 HP	
6.	40-80 HP	generator set
7.	81-250 HP	
8.	7-20 HP	thresher
9.	40-80 HP	ice plant
10.	81-250 HP	
11.	40-100 HP	Jeepney
12.	40-150 HP	Truck and bus
13.	10-20 HP	Banca
14.	21-90 HP	Banca
15.	40-100 HP	Tractor

The following table offers some data on the economics of systems 2,4,5,8,9,12 and 13 as calculated by GEMCOR.

During the Biomass Gasification Workshop held at Chulalongkorn University between May 30 - June 1, 1984, Mr. Luis C. Baja, Marketing Manager of GEMCOR, presented a communication on the Philippine gasifier implementation campaign between 1980 and 1983. The highlights of the implementation campaign may be summarized as follows:

- Applied research on gasification had been available in the universities several years before 1980.

- The Farm Systems Development Corporation (Government owned) willingness to try the technology with technical assistance from the University of the Philippines Engineering Research and Development Foundation Incorporated (UPERDFI) and PSB. Finally the Gasifier and Equipment Manufacturing Corporation (GEMCOR), a Government owned organization, handled the construction and commercialization of the gasifiers.

- Recognition of market potential in addition to irrigation systems to include other shaft power and direct heating.

- Other items of importance were: strong support from national leadership, a transfer of technology organization, an adaptation of the gasifier models, an availability of gasifier feedstock and a program to support this availability, a promotional campaign,and availability of financing for interested end users.

- An implementation scheme for gasifiers within a wide bioenergy system.

Table 1.1 Economic Comparison of Gasifier

Applications	Engine (h.p.)	Space requirement (m^2)	Economic life (yrs.)	Cost of gasifier equipment ($)	OPERATIONAL DATA (per annum)																			Payback period	Remarks
					WITHOUT GASIFIER					WITH GASIFIER										SAVING			
					A (hr)	B (l/hp-hr)	C (l)	D ($/l)	E ($)	A (hr)	B (l)	C (kg/l)	D (kg)	E (kg/l)	F ($)	G ($)	H (l)	I ($)	J ($)	A (l)	B ($)		
MICROMILL	90 (DIESEL)	5	min. 6	48,804	2,000	0.23	59,616	5.16	307,773.36	2,000	50	-	42,300	-	1.86	79,712	29,000	152,886.70	225,998.76	29,000 90%	82,174.30 27%	0.593 yr or 7 months 4 day	
THRESHER	16 (GASOLINE)	2	min. 6	14,110	900 (hr/yr)	0.38	4,300.8	0.217	38,333.1	900	100	1.2	5,160.96	-	1.86	9,967.19	-	-	-	4,300.8	16,124.84 70%	0.33 yr or 4 months 11day	
DRYER	10 (GASOLINE)	2	min. 6	14,110	2,016	0.10	2,016	0.22	10,905.47	2,016	100	1.15	2,318.40	-	1.86	3,848.54	-	-	-	2,016 100%	12,716.86 77%	1.10 yr or 1yr 2 months	
IRRIGATION SYSTEM	40 (GASOLINE)	1.5	min. 6	29,000	8 hrs/day at 305 day/year	0.125	8,200	5.16	42,320.32	8 hrs/day at 305 day/year	70	-	5,200	8	1.86	13,612	2,400	12,809	-	5,740 70%	16,027.32 38%	1.86 yr or 1 yr 10 months 10 days	* Total CPO-charcoal consumption cost 28,312 $
Pur Plant to market transport vehicle	FORD FICON 1000 OR (GASOLINE)	45 ft x 2 ft	min. 6	24,900	12 hr/day at 264 day/yr 8 hr/l consumption	0.1357 (specific fuel)	27,746	0.22	227,742.04	12 hr/day at 264 day/yr	100	1.23	34,091	-	1.86	98,894.8	-	-		27,746	171,150.96 70%	1.1436 yr or 1 month and 23 days	
ICE PLANT	TOYOTA 50 OR (GASOLINE)	7.5	min. 6	30,520	2,200 hr/yr	7	16,044	0.22	131,882.14	2,200 hr/yr	100	-	20,592	9	1.86	34,102.72	-	-	-	16,010	97,420.71 76%	0.37 yr or 4 months and 13 days	
SMALL FISHING BOATS	16 (GASOLINE)	1.0	min. 6	8,300	12 hr/day at 264 day/year	0.12	8,802.56	0.22	49,500.39	12 hr/day at 264 day/yr	100	1.15	8,904.54	-	1.86	11,811.86	-	-	-	8,802.56	38,388.71 77%	0.216 or 2 yr 3months and 10 days	

NOTE : WITHOUT GASIFIER

A. Annual operating time (hr)
B. Fuel consumption (l/hp-hr)
C. Total fuel consumption (l)
D. Total fuel consumption ($)

WITH GASIFIER

A. Annual operating time (hr)
B. l fuel consumption
C. Charcoal conversion rate (kg/l Gasoline)
D. Total charcoal consumption (kg)
E. Charcoal consumption (kg/hr)
F. Cost of charcoal ($/kg)
G. Total charcoal consumption cost ($)
H. Total diesel fuel consumption (l)
I. Total diesel fuel oil consumption cost ($)
J. Total fuel consumption cost ($)

SAVING

A. On fuel oil (l)
B. On fuel cost ($)

Mr. Luis C. Baja also mentioned some problems and challenges to be addressed as follows (selected items):

- To keep prices of systems within reach of end users.
- To improve cleaning trains, reduce cost of operation and maintenance.
- To reduce weight and size of units for mobile transportation.
- To educate end users on strengths and weaknesses of each unit.
- To extend versatility with regards to range of densified fuels.

ANNEX II

ANNEX 2

BIOMASS GASIFICATION WORK IN THE U.S.A.

No reference has been found by the author concerning utilization of gasifiers in the U.S. during the Second World War. Utilization of gasifiers for transportation during the war seems even less likely as gasoline was not known to ever have been in critically short supply. The interest in biomass gasifiers seems to have come only after the oil crisis of 1973.

META SYSTEMS INC., of Cambridge, Massachusetts, prepared a report in January 1982 (23) entitled "Initial Renewable Nonconventional Energy Technology Monitoring Report" for the National Energy Administration with a list of organizations dealing with biomass gasification. The author has selected a few U.S. organizations which could be of interest for any future work in biomass gasification in Thailand. Here is a list of such U.S. organizations, the addresses of which can be obtained from the original reference.

1. Battelle Memorial Institute, Pacific Northwest Laboratory, Washington: manages several biomass gasification projects.

2. Department of Agricultural Engineering, U.C. Davis, California: 35 hp downdraft gasifier, fluidized bed gasifier, small rice hulls gasifier.

3. College of Engineering, University of Florida, Florida: very small gasifiers.

4. Energy Research Laboratory, Georgia Institute of Technology, Georgia: general gasification work.

5. Division of Applied Science, Harvard University, Massachusettes: small gasifiers.

6. Hoddam and Associates, California: downdraft gasifiers.

7. Agricultural experimental station, University of Kentucky, Kentucky: experimental updraft gasifiers.

8. Agricultural engineering Department, Purdue University, Indiana: downdraft research units.

9. Solar Energy Research Institute, Golden, Colorado: oxygen wood gasifiers for methanol production, modeling of gasifiers.

10. Department of Chemical Engineering, Texas Tech. Univ., Texas: fluidized bed gasification.

11. Woodex Corporation, Oregon: updraft 10 MM Btu/h commercial gasifiers.

Not mentionned in the META Systems report is the following University:

Previous Page Blank

12. The GROW Project, the University of Missouri, Missouri: fluidized bed gasifiers.

In the META SystemsINC. report there is reference to only two commercial uses of biomass gasifiers in the United States. The first reference is a rice hulls, charcoal and oil fluidized bed system built by Alberta Industrial firm, a Canadian company, and installed in North Carolina to dry peat. The second reference is a 100-150 kWe downdraft, rotary grate gasifier built by the Biomass Corporation, a US firm, installed and operating in an Alaskan electric cooperative. One of three units sold (as of the time of the META System's report), the system uses a raw material (believed to be wood chips) of size 0.5-2 inches and uses a CAT G353 engine modified to use low Btu gas.

In October 1983, the author visited a recently installed but as yet inoperative biomass fluidized bed unit in Sacramento, California. The unit, installed in downtown Sacramento, was to provide part of the heat and power needed for the State Capitol. The unit was said to be the biggest commercial fluidized bed ever installed. The unit was not yet operating at the time of the visit as there was a little problem in trying to purchase biomass with ash content lower than 5%, the design limit of the gasifier.

The implementation of U.S.-made gasifiers outside the U.S. is not well documented. The author does not have data on such units. For the gasification of crop residues the author seems to have noticed the following trends in the U.S. One trend is the use of low ash content crop residues (less than 5%) in downdraft gasifiers with throats or choke plates such as the experiments of the University of California at Davis (5,24). Another trend is to gasify crop residues in fluidized beds; this is being studied very closely at U.C. Davis and elsewhere in the U.S.

ANNEX III

ANNEX 3

BIOMASS GASIFICATION WORK IN JAPAN

Although Japan was an user of wood and charcoal gasifiers for vehicles in the Second World War biomass gasifier use has not spurred excessive interest in Japan during the post oil crisis era. The only two University groups (known to the author) which have worked in this area are the Department of Agricultural Machinery of Mie University (Takeda, 1982; Takeda, 1983) and the Department of Chemical Engineering at the University of Tokyo (Kunii, 1981; Kuramoto,et.al., 1984).

The Mie University group has been working on small rice hulls gasifiers and (Takeda, 1983) was able to obtain a gas quality of 2-3 gm/cubic meter of particulates and 500 mg/cubic meter of tar, much higher than the Earthscan report (Cha Cheng Sao Rice Mill, Personal Communication) indicated as maximum permissible levels. Utilization of the gas in an engine resulted in carbon deposits at the piston head and on the inner surface of the cylinder head after 30-50 hrs of operation, when the piston rings began to stick and carbon pollution on the spark plug was found. The author recommended the use of additive agents in lubricating oil to prevent the engine from wear.

The Tokyo University Group has been working on fluidized bed gasification of biomass for several years. The research group is comprised of very well known experts of fluidization and applied its knowledge to biomass gasification with the development of some original fluidized bed gasification designs.

Previous Page Blank

Previous Page Blank

ANNEX IV

ANNEX 4

BIOMASS GASIFICATION WORK IN FRANCE

France seems to have very good knowledge of biomass gasification technology obtained from the Second World War and further recent improvements. Among the various firms to produce biomass gasifiers are the Duvant Moteurs Company, the Pillard Company, and several smaller entrepreneurial companies. One unnamed company took the pain to ship one charcoal gasifier to Bangkok in 1982 for demonstration purposes but the author has not heard further about this gasifier although he has seen it operating for a few hours. However this unit is not believed to have been implemented in rural areas. Much biomass gasification activities in France was found to have been undertaken at the Tropical Agricultural Machinery Center (CEEMAT) and the French Institute for Agricultural Engineering (CEMAGREF).

CEEMAT has recently designed a downdraft crop residue gasifier for use on a 20-28 hp light tractor to be used in Africa. The design of the gasifier itself was made by CHEVET FRERES at Croissy Beaubourg and was modified from Second World War designs (vaing, 1983; Cotrait,et.al., 1981). The raw material used are newly cut wood, shredded or unshredded cotton stalks or carbonized cotton stalks, coconut fibers with or without hulls, and wood charcoal. The engine used was a RENAULT R18, 1400 cubic centimeters, 4 cylinders.

For purposes of illustration the maintenance procedures that must be followed may be summarized herewith: Every 50 hours the middle of the hearth must be cleaned and new bone-dry charcoal put in for ease of start-up. The ash pit must be cleaned every 4-5 hours of operation. Daily tars and other condensates must be removed using the various valves. The pipes from the gas generator to the condenser must be cleaned eriodicallyp. All liquids must be drained from the condenser daily and the impingement blades must also be cleaned daily. Both cork vessels must be rinsed every 10 hours of operation. Every 4-8 hrs. of operation the filter paper cartridge must be changed. Additional test reports on site in Africa are not yet available.

The author has visited one installation in Marseilles built by the Pillard Company consisting of a downdraft direct fire gasification system using 700 kg/h of biomass made up of a mixture of chipped "canes de Provence" and wood chips. The producer gas was then burned in a rotary drier to dry alfalfa weed used as animal feed. This unit was one of the first prototypes of the Pillard Company and seemed to be operating properly (Arthayukti, 1984).

CEMAGREF is another research center which is at the forefront of development work on thermochemical processes in general (Molle, 1984).

Previous Page Blank

ANNEX V

Previous Page Blank

ANNEX 5

BIOMASS GASIFICATION IN BRAZIL

An account of Biomass gasification work in Brazil has appeared in an Earthscan review (10) and is summarized in this annex (Foley and Bernard, 1983).

Brazil is reported to have made the greatest progress in its gasification program mainly through private industry efforts. There are at present some 60 private manufacturers claiming competence in gasifier manufacture. Some popular gasifier systems are described as follows:

System	Fuel	Installed cost	Manufacturer
1. Crossdraft 67 hp W/gasoline engine, 100 hp W/diesel engine used for vehicles mainly	charcoal	$ 750 (installed)	Industria Siquicroli has sold 650 units
2. Downdraft 3.35 hp uses an 8 hp engine used for pumping (30 cu.m. an hour for 28 hours per batch)	charcoal	$ 1,000 including engine and pump. (installed)	Industria Siquicroli (under development)

System	Fuel	Installed cost	Manufacturer
3. Downdraft 35-188 hp w/gas. eng. 50-260 hp w/dies. eng.	charcoal (or well dried wood)		Frank Equipamentos Industrias companies (under production and even export).
4. Downdraft 40-60 hp tractors 60-107 hp tractors	charcoal	$ 3,100 (installed) $ 3,500 (installed)	Explo Industrias Quimicas & Explosivas (under sales test)
5. Downdraft direct heat 0.25-2.5 GJ/hour (in 4 sizes)	wood	$ 7,000 - $30,000	Termoquip (sold 30 units to ceramics, bakeries, foundries, crop drying, chemical industries)

Previous Page Blank

6. Undetermined gasifier type but for direct heat applications	high quality charcoal bags.		Hatsuta Co.(potential sales to glass making ceramics industry where very high flame temperatures are required)
7. Updraft (16-25 GJ/h direct heat systems)	10 cm wood logs	about $100,000	GTI Co. (for lime making plants)
8. Various types of gasifiers	-	-	Florestal Acesita Co.

It is to be noted that Brazil has an ample supply of wood and all its gasifiers are designed for wood and charcoal.

ANNEX VI

ANNEX 6

500 We GASIFIER (UNIT NUMBER 1)

This 500 We Downdraft charcoal gasifier prototype was given to the Prince of Songkhla University's Department of Mechanical Engineering to develop, test, and implement. This is the final report submitted.

A. INTRODUCTION

Due to the oil crisis in almost every country there has been increased effort at searching for alternative sources of energy to replace oil. Dr. Naksitte Coovattanachai of the Department of Mechanical Engineering, Prince of Songkhla University, has been doing research work in the field of producer gas systems. His initial work was centered around the development of charcoal gasifiers to produce electricity.

The electricity from a charcoal unit uses the principle of the combustion of charcoal in a controlled volume of air. The gas thereby produced from the gasifier is then fed into an internal combustion engine. In rural areas this is particularly interesting since the charcoal can easily be found and the particular importance of this unit will be shown in unelectrified areas. In areas making use of liquid fuels, the producer gas system can save liquid fuels purchased from outside.

The unit was designed, built and test-run under an electric load for no less than 400 hours at the Department of Mechanical Engineering, Prince of Songkhla University. The tests conducted were tests of performance, details of maintenance requirements, and necessary improvements until the unit proved to be technically reliable.

This particular unit was built, tested and implemented by the Mechanical Engineering Department, Prince of Songkhla University as part of the biomass gasification component of the Renewable Non-conventional Energy Project funded by NEA/USAID/DTEC and headed by Dr. Woraphat Arthayukti, Department of Chemical Engineering, Chulalongkorn University. The actual implementation was done by setting up a gasifier unit at the house of one teacher at the Yang Ngam School, Tambon Tha Chang, Haad Yai District, Songkhla Province. The unit has been in operation ever since May 3, 1983.

B. DETAILS OF THE SYSTEM

The charcoal gasifier system may be divided into the following important parts as follows:

(i) Gasifier: This is the central part of the unit where combustion takes place and from which the gas is obtained. The operation of the gasifier is started by adding the necessary charcoal. The charcoal at the center of the combustor is ignited and air is allowed in at regulated flow rates so as to have ignition exactly at the center of the gasifier. The hot gases will then pass through a layer of charcoal below the fire zone and will be reduced into producer gas. The next process will be the cleaning train and the cooling of the gas before it is fed into an internal combustion engine. Figure A6-1

Previous Page Blank

shows a cross-section of the gasifier.

(ii) Cyclone: The cyclone is designed to be a large solid particle removal apparatus. The cyclone is placed adjacent to the gasifier and the hot gases coming out of the gasifier are fed into the cyclone where whirling action separates the coarse particulates made up partly of ash and partly of unburned charcoal from the main gas. The fines go through the cyclone with the main body of gas to the fine filter apparatus and the coarse particulates stay at the bottom of the cyclone and may be removed through a valve. Figure A6-2 shows a sketch including dimensions of the cyclone built for this particular gasifier system.

(iii) Cooling System: The hot gases from the gasifier are still hot after passing through the cyclone and must be cooled. Cooling is done using several cooling tubes of 2 cm internal diameter as shown in Figure A6-3 Cooling is achieved using natural convection.

(iv) The Cloth Filtering: After processing the gas through the cyclone and the heat exchanger, the gas is processed through a cloth filter to remove additional particulate fines. This is achieved using easily found coarse cloth material placed on a metal frame as shown in Figure A6-4 There are actually several sheets of the cloth placed on top of one another. The dimensions of the unit are also presented in the figure.

(v) Air-Gas Mixing: After the fines filtering process, the gas must be mixed with air before entering the combustion chamber of the engine just after the spark plug ignition. The mixing must be done so as to obtain complete combustion. Figure A6-5 shows a sketch of the mixing valve used on the gasifier unit.

(vi) Start-Up Air-Gas Mixing: This additional mixing device was especially designed for this particularly small gasifier and is used to start up the gasifier more easily. Using the main air mixing apparatus the start-up is much more difficult for this particular gasifier system. After the start-up has been achieved, then the main mixing apparatus is used and the auxiliary is closed off. Figure A6-6 shows a sketch of the auxiliary mixing apparatus.

(vii) Engine: The engine used is a four strokes side valved HONDA gasoline engine widely available on the market. The details are as follows:

Piston chamber volume	197 cc.
Maximum horse power	5 h.p. at 3,600 rpm
Maximum torque	7.7 ft-lb
Gasoline consumption	290 gm/TS per hour
Total weight	15 kg

The only changes made to the engine for use with producer gas was the removal of the carburator and the fitting in of a gas pipe to replace the carburator. It is to be noted that the governor was removed from this unit and governor action was done manually.

(viii) Generator: To this engine was attached an electric generator with the following specifications: 2 KVA, 220 V, 50 cycles, 3,000 rpm, single phase, 9 amp. No additional modifications needed to be made to the generator.

C. OPERATION OF THE SYSTEM

Prior to the start-up of the system the gasifier had to be ignited. The gasifier ignition sequence goes as follows:

- open both gasifier top and ash removal door at bottom.

- open the valve at the bottom of the cyclone and open all valves in the gas flow sequence.

- fill the gasifier with 1 cubic inch size charcoal up to the constriction.

- ignite a gasoline impregnated or diesel fuel impregnated cloth on top of the charcoal and in the center of the gasifier and use a blower to blow from the top until the charcoal is ignited and until a good gas is produced. This can be noticed when the smoke coming out from both top and bottom becomes clear.

- close the ash door at the bottom and all other valves except the valves leading the gas to the engine, and then start the engine. A note of caution at this stage because flames may shoot out from the orifices in the gasifier when the vacuum pull of the engine stops when the engine does not start. The operator must be careful at this stage.

- to aid initial start-up it is recommended that the blower be used to facilitate the passage of air to the engine as the suction power of the engine will be small at the start-up. If this is to be done then the mixing apparatus air inlet should be closed on the main mixing apparatus. Then fine tuning of the air mixing is done on the secondary mixing apparatus. This procedure will help the start-up.

- then the start-up cord is pulled to start the engine.

- after start-up, ease down on the air coming in at the secondary mixing valve and open the main mixing valve until the secondary mixing valve is entirely closed and make use now of the primary air mixing valve to adjust for increased load on the engine.

- as the engine runs, switch on the loads one by one, regulate the air input accordingly and, while doing this, make sure that the voltage reads 220 V which will enable 6 to 8 lights to be turned on at the unit's load control board (made up of 8 light bulbs on one control board).

- when it is desired to turn on a light in a particular place in the house or in the adjacent school building one or two light bulbs are turned off at the control board and one or two bulbs are immediately switched on where they are to be used. During the switchover the

engine may run a little faster and will be more noisy but it will soon come back to normal and the voltage will remain fairly constant at 220 V.

The entire starting operation should take between 15-20 minutes in all. However for wet charcool more time may perhaps be needed.

D. PERFORMANCE DURING ACTUAL USE

This engine-generator set rated at 2 kWe using gasoline was implemented at the above mentioned school in May 1983 and is being used to this day. Its performance was as follows:

- the system was reported used 3 hours a day, everyday, for several months. But during a visit by the component leader to the site in February 1984 the system was used twice a week for more than 3 hours for each day of use. The reasons will be presented later in this report.

- the system was able to deliver 800 We.

- the charcoal consumption was measured at 1.5 Kg/h.

E. MAINTENANCE SCHEDULE

The operational experience accumulated suggests that the following maintenance schedule should be followed:

- The ash, the unburned charcoal and the partially burned charcoal should all be removed from the gasifier once a week or every 20 hours of operation of the gasifier.

- Everytime before use of the system, the accumulated ash should be removed from the cyclone bottom, and water should be removed from the bottom of the heat exchanger. If the system is to be used every day this is what should be done every day.

- Every two weeks, assuming the system is being used every day, the cloth filter should be changed.

- Every month, also assuming everyday use, the engine should be cleaned by cleaning the top of the ignition chamber, the chamber walls, the spark plugs and parts that can be removed easily and cleaned with liquid lubricants.

- Every day the system is used and, just before turning the engine off, it is recommended that a lubricant be injected through the secondary air mixing valve into the combustion chamber of the engine. This procedure decreases corrosion of the engine parts by covering all parts with a thin film of lubricant. This is especially important when the system will stand idle for a few days or more.

- Change the lubricating oil every 45 days.

On the 28 of July 1983, after 250 hours of use, the inlet air

pipe had to be replaced as it had burned out.

F. PROBLEMS WITH THE ENGINE

- Valves wear: It has been found that valves wear faster with producer gas operation than with gasoline operation and that the valves must be removed and ground more often.

- Valves sticking after prolonged idleness of system: It was found that after prolonged idleness the valves are apt to corrode on the shaft, preventing the valve from functioning. Every time this happened the valves had to be removed, cleaned and oiled, then replaced. The best remedy was found by injecting a lubricant at the end of use, just before turning off the ignition, and to see to it that the system did not stay idle for a prolonged period of time.

G. INTERVIEW WITH THE LOCAL OPERATOR OF THE SYSTEM

It was found that, foremost to all other comments, the user stated his satisfaction with the gasifier system. The main reasons for this satisfaction stemmed from the following comments: It solved the problem of non-availability of electricity for the user himself, it was a system which did not pose insurmountable operational inconvenience for the user; and it was a system which offered energy at no fuel cost to the user. However the user had some suggestions to offer that could improve the system:

- The ash door at the bottom of the gasifier should be designed in such a way as to make opening and closing the door more easy and faster.

- During the removal of all the ash and charcoal from the gasifier too many parts have to be removed. It would be better if everything could fall down through the grate so that the whole gasifier would not have to be taken apart.

- During the manual mixing of air and producer gas a lot of difficulties arose for the user and a better mixing system and procedure should be developed to help the user. The closer we get to the ease of operation of the gasoline engine running on gasoline, the better for the user.

- The manually operated blower should be replaced by an electric motor for ease of use by the operator.

- There are too many valves in the entire system. Some valves are never used at all.

H. ECONOMIC ASSESSMENT

An economic assessment of the system was made based on daily operations and compared to use of an equivalent gasoline system. The results are presented in Table A6-1.

Based upon an operation of two evenings a week, the cost of

electricity is deemed higher than the value given above.

I. SUMMARY AND CONCLUSIONS

- A 500 We charcoal gasifier unit has been used to provide electricity in a rural household since May 1983 (the latest visit to the site by the component leader was made in February 1984).

- The rural household using the gasifier system operated the unit every evening for a few months. Later on it optimized use of its gasifier by minimizing the labor that had to be put into the system while enjoying the use of electricity every evening. Neighboring households (hundreds of meters away) purchased 12 Volts, 120 amperes batteries that could be used for up to 30 hours; they used the gasifier to charge these lead-acid batteries twice a week. Thus, the household operated the gasifier twice a week instead of seven times a week and was still able to enjoy electricity every evening. In addition , other households were also able to enjoy electricity every evening by bringing their batteries to be charged twice a week.

- The user indicated that manufacture of its own charcoal, and the length of start-up of the gasifier was troublesome. Modifications for ease of start-up would be welcome. However the user was generally satisfied with the unit.

- The user took very good care of his gasifier based on the component leader's assessment during two trips to the implementation site. The neighboring villagers have also shown great interest in the unit but would like to have improved versions of the unit such as a battery operated blower to replace the manually operated blower now in use during start-up.

- It is to be noted that this gasifier was made available to the household for testing free of charge. Other households have indicated interest in obtaining a similar unit under similar conditions but none has come forward to say that it would pay for a unit.

Table 6-1

System parameters for a Small Charcoal Producer Gas Unit and a Gasoline Engine Generator Unit.

		Charcoal	Gasoline
(1)	Power output	750 W	750 W
(2)	Fuel		
	- moisture content	6% - 9%	-
	- size	3 cm	-
	- fuel consumption	1.5 kg/hr	1.05 1/hr
	- specific fuel consumption	2.0 kg/kW-h	1.4 1/kW-h
	- fuel cost	2 B/kg	11.40 B/1
	- fuel cost in electricity generation	4 B/kW-h	15.96 B/kW-h
(3)	Heating value	30710 kJ/kg	41170 kJ/kg
(4)	Overall efficiency	5.9%	8.2%
(5)	Service and maintenance		
	- starting-up time	15-20 min	-
	- refuelling interval	4 h	4 h
	- annual man hours of labor input needed in servicing the unit	365 h	4 h
(6)	Economics of operation (5 hours operation per day)		
	- capital cost	16,000 B	6,000 B
	- annual fuel cost	5,475 B	21,845 B
	- annual repair and maintenance cost	985 B	270 B
	- annual labor cost	3,650 B	120 B
	- production cost of electricity	12, 2 B/kW-h	17.9 B/kW-h

Note: 1 US$ = 23 B (approx.)

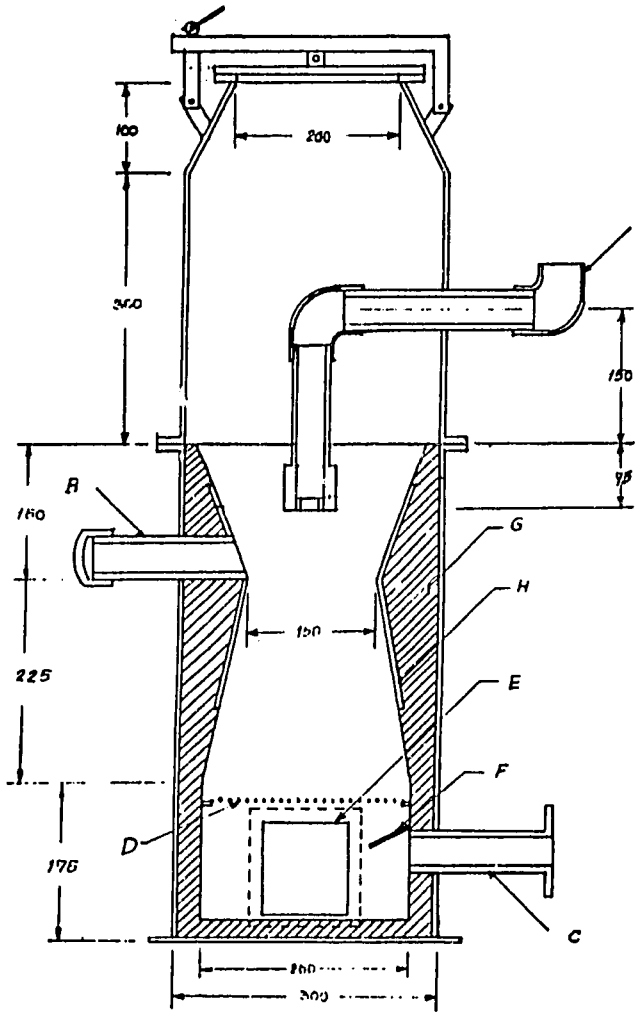

Figure A6-1

500 We Charcoal Gasifier (Unit Number 1)

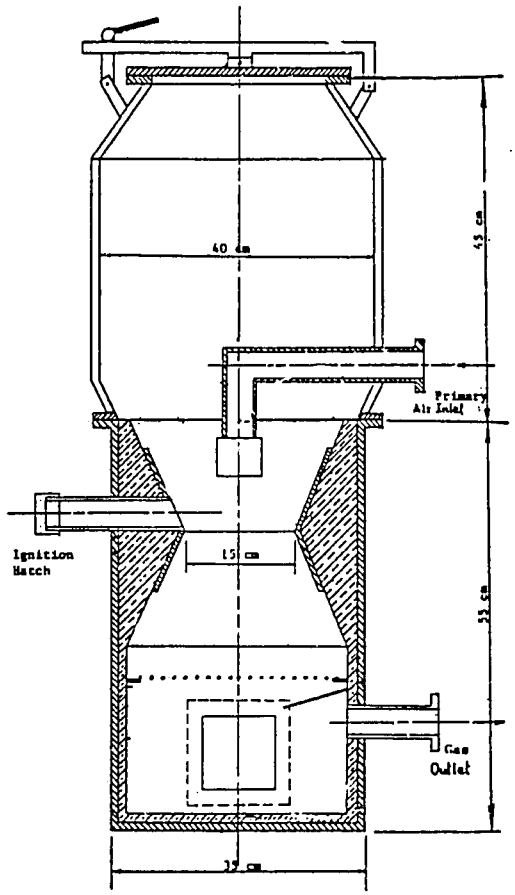

Figure A6-1 (continued)
500 We Charcoal Gasifier (Unit Number 1)

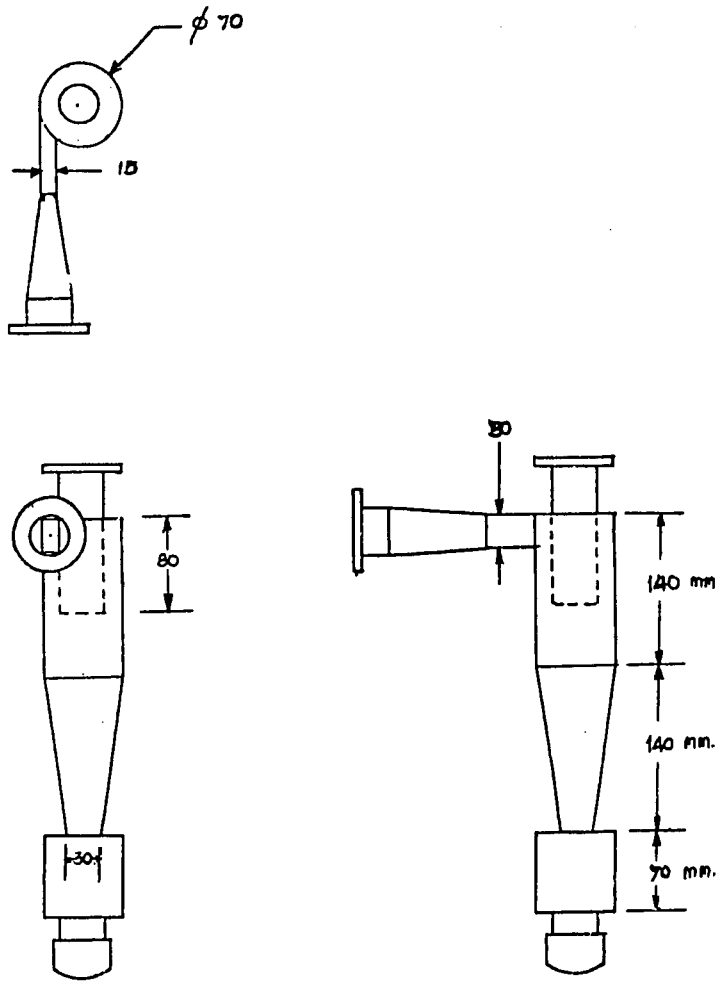

Figure A6-2 Sketch of the cyclones

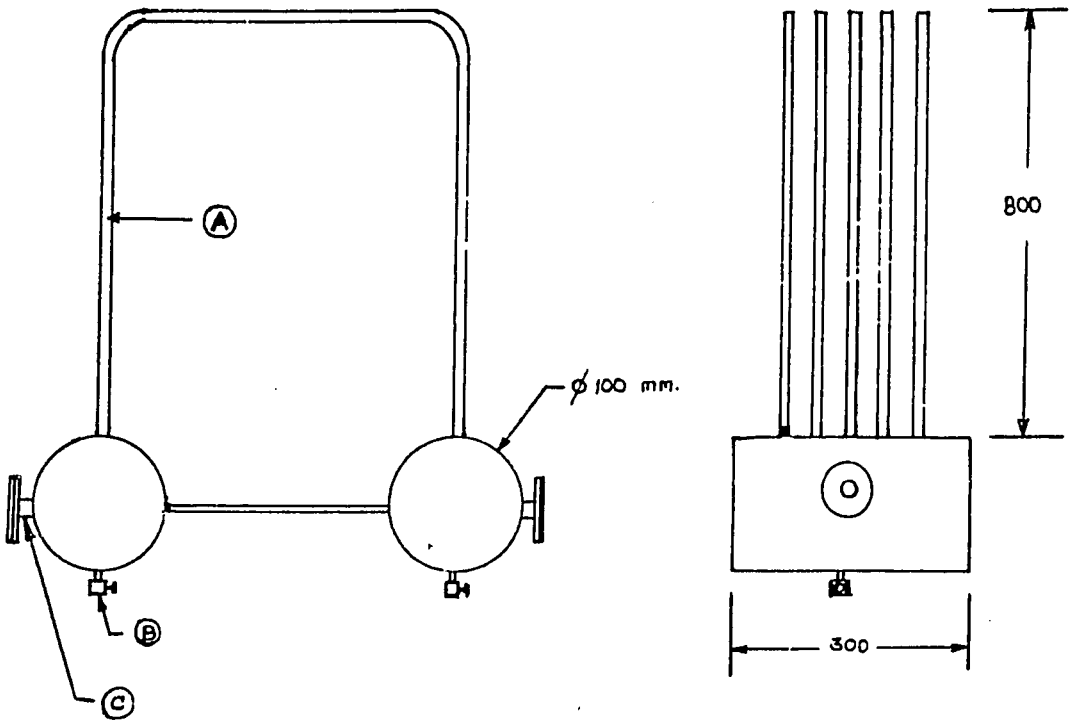

FigureA6-3-Sketch of the gas cooler.

A) Iron pipe (20 mm)

B) Valve (for removal of water)

C) Iron pipe (45 mm) plus flange

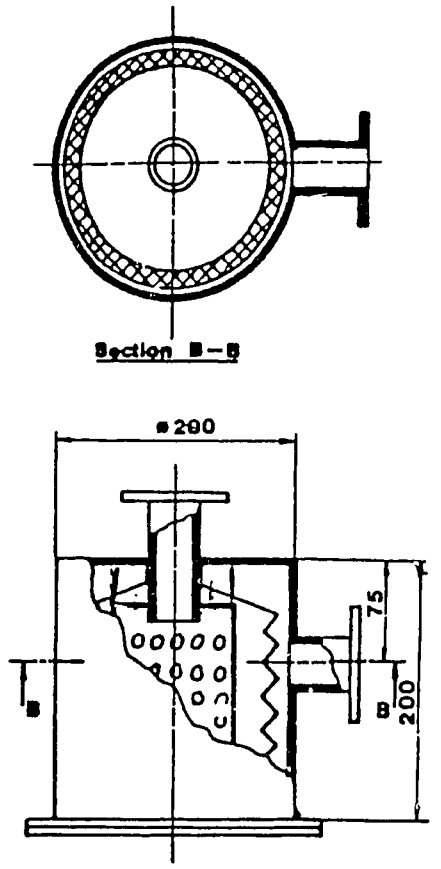

Figure A6-4 - Fine particles cloth filter.

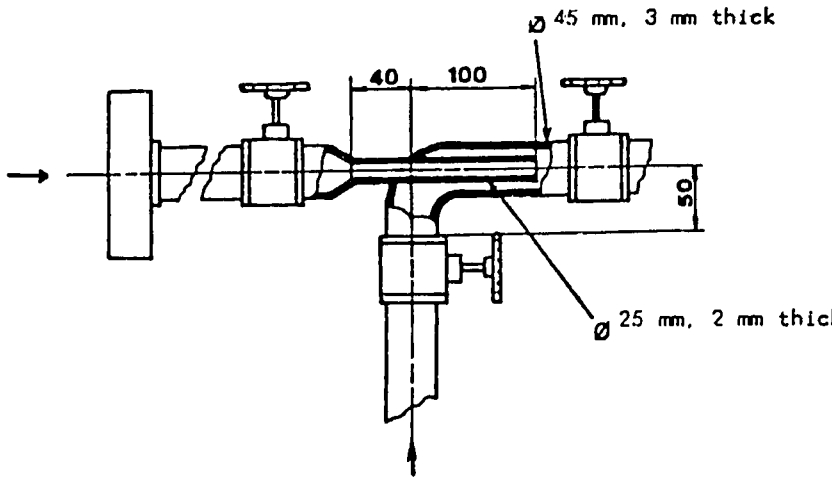

Figure A6-5 Main air-gas mixing valve.

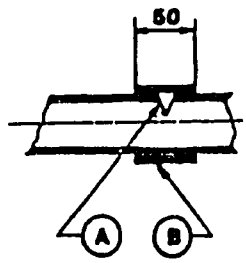

Figure A6-6 Secondary air-gas mixing valve.

A) The slit is 15 mm wide & 15 mm deep.
B) Laterally movable ring.

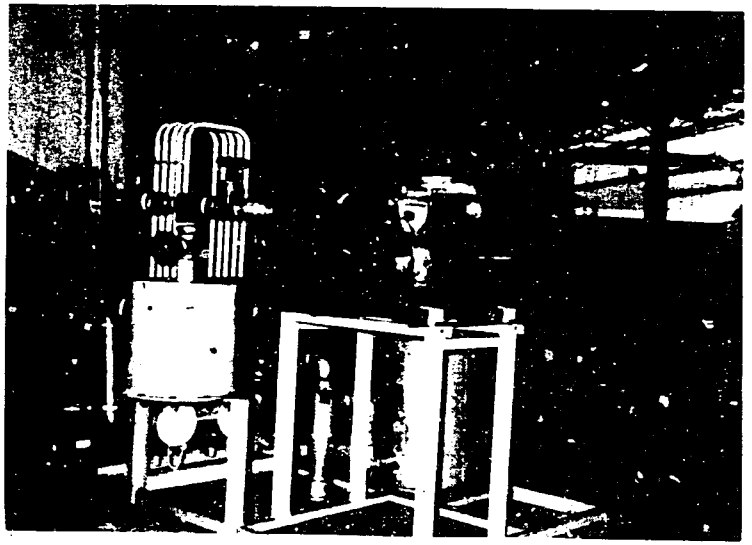

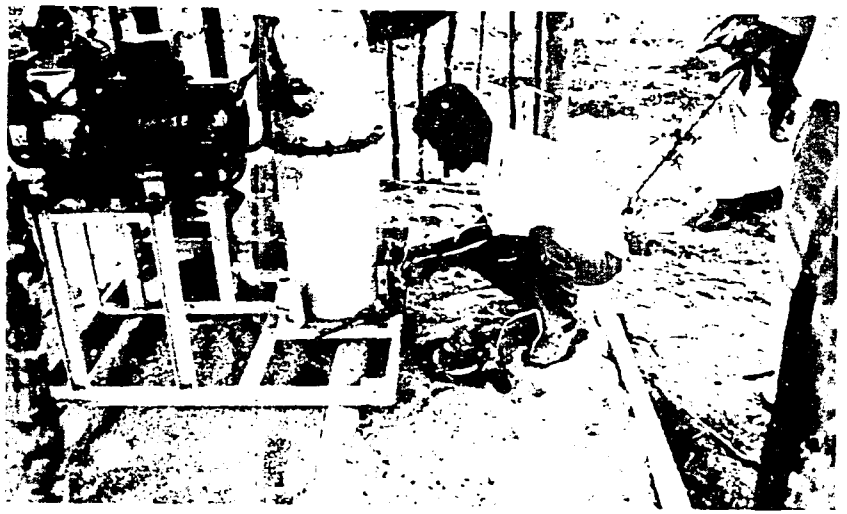

Figure A6-7 - 500 We Gasifier (Unit Number 1), Downdraft, charcoal gasifier.

upper left : the unit at the Prince of Songkhla University.

left & above : the unit at the implementation site, Ban Yang Ngam, Songkhla Province.

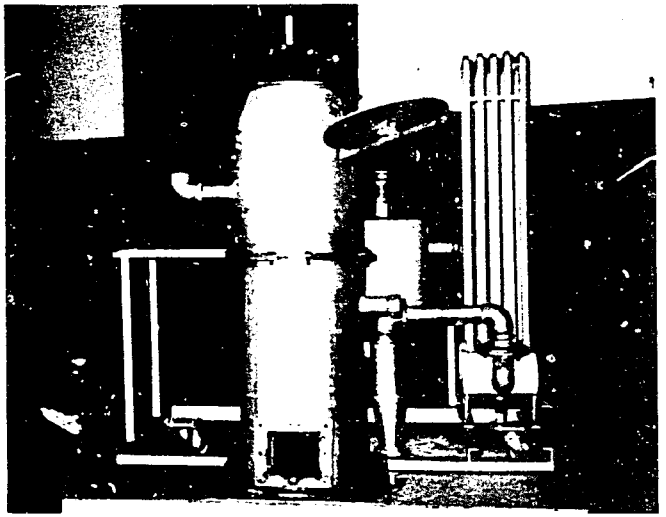

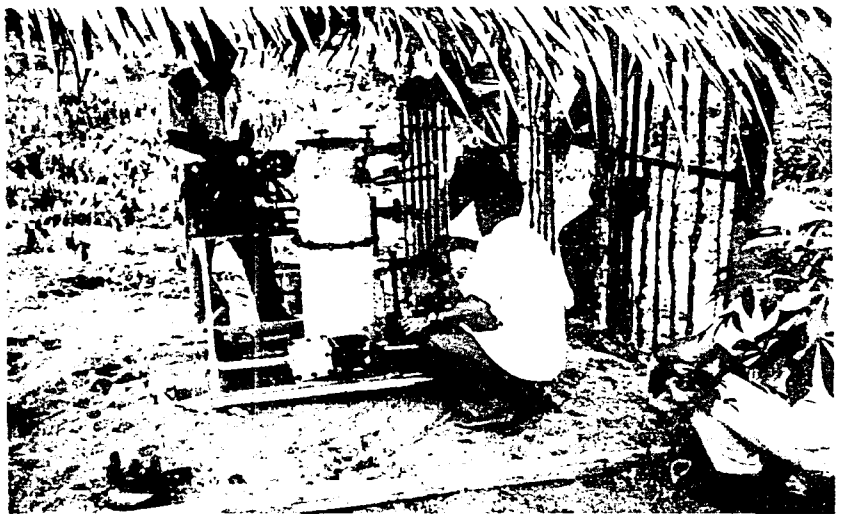

Figure A6-8 - 500 We Gasifier (Unit Number 1)
Downdraft Charcoal Gasifier.
above left : at Songkhla University
above, and at left : on site at Ban Yang Ngam,
Songkhla Province.

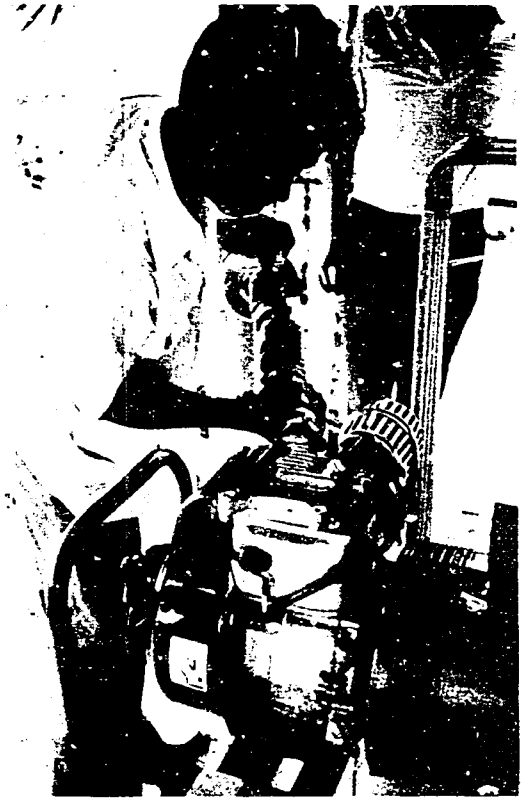

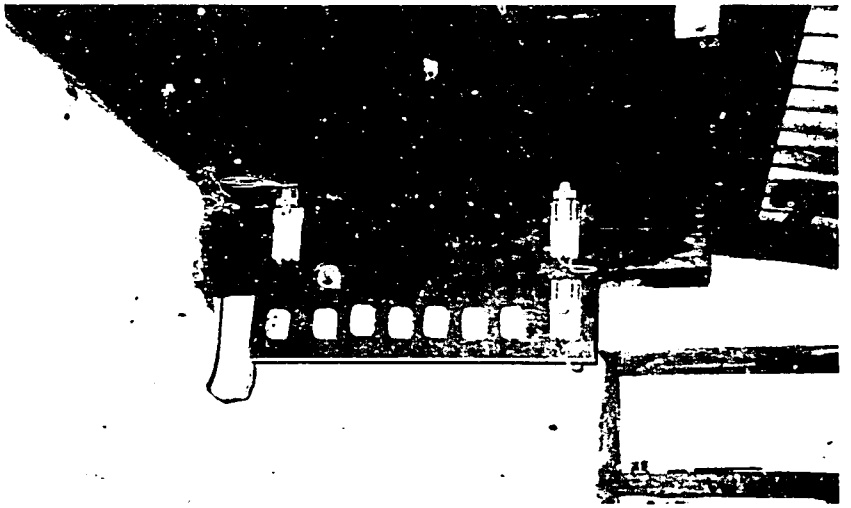

Figure A6-9 - 500 We Gasifier (Unit Number 1), Downdraft, charcoal Gasifier.

above right : the load control unit.
above : the operator tuning in the main air inlet after start-up of the system.
right : a top view of the central tuyere.

Previous Page Blank

ANNEX VII

Previous Page Blank

ANNEX 7

500 We GASIFIER (UNIT NUMBER 2)

This 500 We Updraft Charcoal Gasifier prototype was designed, constructed and tested at Chulalongkorn University. This is the initial construction and testing report.

A. INTRODUCTION

When downdraft gasifiers are operated it is often said that 5 to 10% of the unreacted carbon leaves with the ash (Goss, Personal Communication). From our experience with downdraft gasifiers we know this to be true but we do not know the exact extent. The reason for this is probably that the raw material flow is difficult to control. When we operate very small downdraft gasifiers the flow of raw material itself is not smooth as it is easy, for example, to create a cavity in the middle of the combustion zone. An undraft gasifier would seem to be able to correct the unreacted carbon problem as the combustion occurs now at the bottom of the gasifier and all carbon there would probably be oxidized. Although we had no information, we felt that an updraft gasifier would make it easier for a piece of solid fuel to make its way down the gasifier.

B. DETAILS OF THE UPDRAFT GASIFIER

The design of this small updraft charcoal gasifier is shown in the following figures. During the course of the construction of the unit many changes in the design details were made and after some experimentations these details were remade when the system was found to still have some deficiencies. The following is a listing of the various modifications that were brought to the system more or less in a sequential fashion.

(i) The initial design did not incorporate a particulates removal cyclone. The cleaning train consisted of a stone impingement filter bed (1 cubic inch stones) and a cloth filter. The cloth was wrapped four times around a metal frame in such a way as to make a cartridge. The cloth used may be found easily in Thailand and is locally called "Pah Dip". It is locally used to make cloth bags. The cleaning train did not incorporate a cooling system as the pipes and vessels removed sensible heat from the gas very well already. This cleaning train still let pass some particulates of small sizes although sizes and quantities were not determined.

There was evidence of tar as a gluey substance in the cylinders, and along pipes could be seen black deposits. After 3 or 4 hours of operation the filter cloth was very heavily loaded with particulates and the stone impingement filter was also loaded with particulates. The deposit on the filter was wet, indicating that both particulates and tar had deposited and the cloth was thrown away as there seemed to be no way to clean it and reuse it again.

The charcoal size used in the testing was of the order of 3 x 3 x 3 cm. The operation of the unit coupled to a generator on an electric load yielded 700 We at 220 V for a length of time of 7 hours per batch. The

engine used in this set of experiments and subsequent sets of experiments on this particular system was a 5 hp 192 cc one-cylinder Honda gasoline engine with no governor attached to it. The engine had an electric generator built into it.

The initial system was equipped with the gas exit pipe at the top of the updraft gasifier bed. The unit was tested for about 10 hours and it was observed that tar content was too excessive to use the unit as such in the long term. It was difficult to say if the quantity of particulates going into the engine was tolerable over the long term, but during the testing period there seemed to be no particulate problem. But, in order to improve gas cleanliness, it was decided to move the position of the gas exit pipe downward.

(ii) The first design change was to move the position of the gas exit pipe from the top of the gasifier to another position below that level as shown in the figures, the remaining details of the gasifier system being the same. After this design change, the system was tested and it was discovered that the cloth filter was no longer full of black tarry particulates but was now full with a layer of seemingly white ash but with a little less tar on the cloth. The amount of particulates had seemed to increase but such particulates looked like white ash. The power obtained was again the same with 700 We at 220 V. The unit was tested for another 10 hours with close inspection of all the parts after 3 or 4 hours of operation, especially to look for the presence of tars. Indeed the tar content of the gas was again too high which necessitated engine cleaning too often. It was again felt that over the long term the design was not satisfactory.

(iii) The second design change was to add an oil bubbling box after the cloth filter with the idea of removing tars and particulates. The gas pipe was originally inserted 1 cm into the diesel oil in the oil bubbling box. But this created a resistance to air flow and the engine became difficult to start. In the oil bubbling box half full-of diesel oil the top half was full of wood chips (0.5 x 0.5 x 0.5 cm sizes to a height of 7 cm) placed there to act as impingement filter and also to slow down liquid entrainment towards the engine. For ease of starting the engine the gas pipe was inserted just below the diesel oil line and only then did the engine start easily. On the first test run which lasted 3 or 4 hours, the system was inspected and it was found that the diesel oil had disappeared from the oil bubbling box probably due to a suction effect. The cylinders were also inspected and found to contain a black deposit; however, it was difficult to differentiate between tar and diesel oil.

(iv) The third design change to further improve the design as presented in section (iii) was to replace the diesel oil and wood chips inside the oil bubbling box by iron filings. But the iron filings oxidized and the rust powder entered the engine, causing the combustion chamber to become very dirty.

(v) The fourth design change was to improve the design as presented in section (iv) by using water instead of diesel oil in the oil bubbling box but retaining wood chips on top. We again had the start-up problem if the inlet pipe was too deeply inserted into the water. After

testing and inspection it was found that the combustion chamber in the engine appeared cleaner but particulates and tars remained, and it was also discovered that the water had been sucked out of the oil bubbling box.

(vi) As a fifth design change was to install a cyclone after the gasifier. Upon installation of the cyclone it was observed that the particulate load on the cloth filter had dramatically decreased. However the tar problem was exactly the same as before.

(vii) The sixth change in the design was to remove the oil bubbling box and the cloth filter and add a water scrubber to the system. The scrubber was made of a pipe 90 cm long, 3 central perforated plates (90 mm perforations throughout the plate, 4 cm between each plates), a water distributor above, another perforated plate still above with a 10 cm layer of wood chips on top to prevent water entrainment, and the whole pipe placed in a water seal. The operation involved starting up the system with the scrubber turned off. At the first try the system just stopped as soon as the scrubber was turned on. After various adjustments, the central perforated plates were removed and the layer of wood chips on top was increased from 10 to 15 cm. Again start up was difficult but the system operated. Particulate presence was very important (the exit gas pipe was at the low position) and tar, although somewhat reduced, was still significant (in this set of experiments the cloth filter had been totally removed). The scrubber design was tested corrected and tested again over a period of 15 days but it was not possible to improve gas quality.

(viii) As a seventh design change it was decided to come back to the cyclone, the stone impingement filter and cloth filter cleaning train and only change the stones into porous coke (sizes 2 x 2 x 2 cm). This material, reputed to be an adsorbent, was used for iron reduction and cost 5 baht a kilogram in Thailand. After testing this system for several hours, inspection showed that the combustion chamber was covered with hard ash of brownish color. The particulate load on the cloth filter was much better than when stones had been used in the filtering system.

(ix) As an eighth design change, to the design described in (viii) fiberglass insulation material was placed in the empty oil bubbling box as a safety filter and this seemed to prevent particulates from entering the engine.

(x) As a ninth change, from the design in (ix) the coke filtering material was changed to coal, and the fiberglass in the oil bubbling box was changed to carbonized rice husk plus an iron fabric material (the scotbright dishwashing material). The problem with this arrangement was that broken rice husk pieces were sucked into the engine. Thus this design change brought no improvement to the system.

(xi) As a tenth change to the design described in (x), the stone filter was replaced by non-carbonized rice husk, the other cleaning system consisting of the cyclone, the cloth filter and the fiberglass insulation in the box. After testing and inspection it was found that the cloth filter was clean, the combustion chamber was a little bit

covered with a slightly sticky material, the fiberglass insulation which served as safety filter was not dirty. After 3 or 4 days of operation the clear plastic pipes began to turn yellow. The combustion chamber was found to be a little dirty.

At this stage the Honda engine had been tested with bad quality gas and had been taken apart countless times. We suspected that lubricating oil was leaking into the combustion chamber. Thus, it was a little bit difficult to comment on the state of the combustion chamber and the reasons.

(xii) The final cleaning train tested consisted of a cyclone, a coke filter, a cloth filter, a cotton wool as safety filter. This cleaning train was tested for 2 or 3 days and then the engine inspected. It was found that there was a liquid very much resembling lubricating oil in the cylinder but the engine was not overly dirty.

It is to be noted that the updraft gasifier blueprint that is included in this appendix does not include the cleaning train. The gas exit pipe is connected to a cyclone designed very much like the cyclone presented in detail for the 7 hp unit (unit number 2) designed to produce 2 kWe. The gas then leaves the cyclone and is fed into a filter chamber placed at the bottom of a stone impingement filter and at the top of a cloth filter. The overall dimension of this unit is 65 cm for the diameter and 25 cm for its height. Principles of construction may be obtained again from the above mentioned design. The gas then was connected to an oil bubbling box of 13 cm internal diameter and 15 cm in height. The gas was then fed directly into the engine as shown in the picture.

C. OPERATION OF THE GASIFIER

As a first step the gasifier is filled with 1 cubic inch sized charcoal pieces through the top of the gasifier and the hatch left open. An oil impregnated piece of cloth is then placed into the gasifier through a side ignition port positioned some 10 centimeters above the grate and the cloth ignited. A hand held blower (we used an electric blower) directed inward through the ignition port will allow the charcoal to become ignited. This operation will last 3 minutes, after which the ignition port is closed. The blower is now placed at the air entrance pipe below the grate to allow the charcoal just above the grate to become red hot. This operation will last 5 minutes after which the top hatch is closed and fastened. Just before the gas is fed into the carburator of the engine there are two valves, one being the gas valve and the other the air valve. The next thing to do is to open both valves which will allow the gas to exit through what is to become the air inlet, and ignite the gas there to test gas quality. If the gas burns we deduce that the gas can now be fed into the engine. The air inlet valve is now turned off and the air inlet slit immediately at the entrance of the carburator is opened. The blower may now be turned off and the engine started manually.

While the engine is running the air inlet must be slowly switched from the start-up air inlet slit to the main air inlet pipe. This is done gradually by closing the inlet slit and opening the air inlet valve. The air inlet valve through which all the air now passes through is adjusted to

50 as to have optimal power output. The automatic governor attached to the engine will thus close the built in butterfly valve to allow for a minimum flow of gas in. It is now time to put a load on the engine. On this updraft gasifier a load of 700 We (7 light bulbs of 100 We each) can be connected to the generator and still obtain a voltage of 220 V. If more than 700 We is connected then we have a voltage drop. The maximum load at which the voltage remains at 220 V is about 700 We.

D. THE GASIFIER TESTING PROGRAM

The updraft gasifier testing program dealt partly with testing to make the unit operational and making it more efficient with design changes of the cleaning train as presented in a previous section. Then the program also attempted to obtain some rough measurements of operation performance. The results are presented as follows:

- Charcoal consumption 1.2 kg/hp - h (1.61 kg/kWe-h)

- Charcoal water content (obtained from one charcoal sample) 8.6%

- Regular gasoline estimated consumption 380 c.c./hp-h (the estimation comes from the brochures obtained with the engine).

- Load (in Watts) Flow rate (cm /s) (at T = 105 F) (in the oxidation zone) T c

Load (in Watts)	Flow rate (cm /s) (at T = 105 F)	(in the oxidation zone) T c
200	2549	1171
400	2821	1199
700	2912	1234

- At the maximum load of 700 We where voltage could be maintained at 220 V the following gas composition was obtained from an Orsat parameter (the fine calibration of which was not made) with the following results:

	CO2	O2	CO
1st sample	4.6	0.5	24.5
2nd sample	3.0	0.7	22.1

The values are in percentages. The hydrogen concentration value was not obtained.

- The temperature of the gas at the inlet of the carburator was measured as 105 F.

It is to be noted that the updraft gasifier was operated for above 100 hours between which several design changes were made and during which the above measurements were made. The charcoal consumption was made by placing the entire system (weighing around 100 kg) on a 500 kg balance so that loss of weight with time could be measured over a length of time of 3 hours. Concerning the calculation of the flowrate this was done using a hot wire anemometer designed to measure flow rates of low temperature gases. The temperature in the middle of the oxidation zone was obtained using a thermocouple probe through the ignition pipe at a level believed to be the oxidation zone. Finally an orsat analysis of an exit gas sample was made as presented above. However fine calibration of the orsat apparatus was not made and accuracy of measurement cannot be certified.

E. SUMMARY AND CONCLUSIONS

The summary and conclusions of the development of the 500 We updraft charcoal gasifier may be listed as follows:

- The water scrubber concept could not be used with high efficiency on a 500 We system. The most probable reason is the low tolerable pressure drops allowed.

- The cyclone was found to remove particulates very well and its absence from designs should be considered carefully. In addition to a cyclone a cloth filter and a safety filter would be needed to ensure proper particulate removal. Perhaps more investigation should be performed on rice husk and cotton wool as filtering materials.

- On the question of tar, the design does not eliminate all of the tar and this is a problem. At this stage of the development of updraft charcoal gasification, the best recommendation to be made is to use very good charcoal.

- On the ease of use and smooth mechanical operation of the gasifier with respect to start-up and flow of solid fuel down through the unit, the unit is operating satisfactorily.

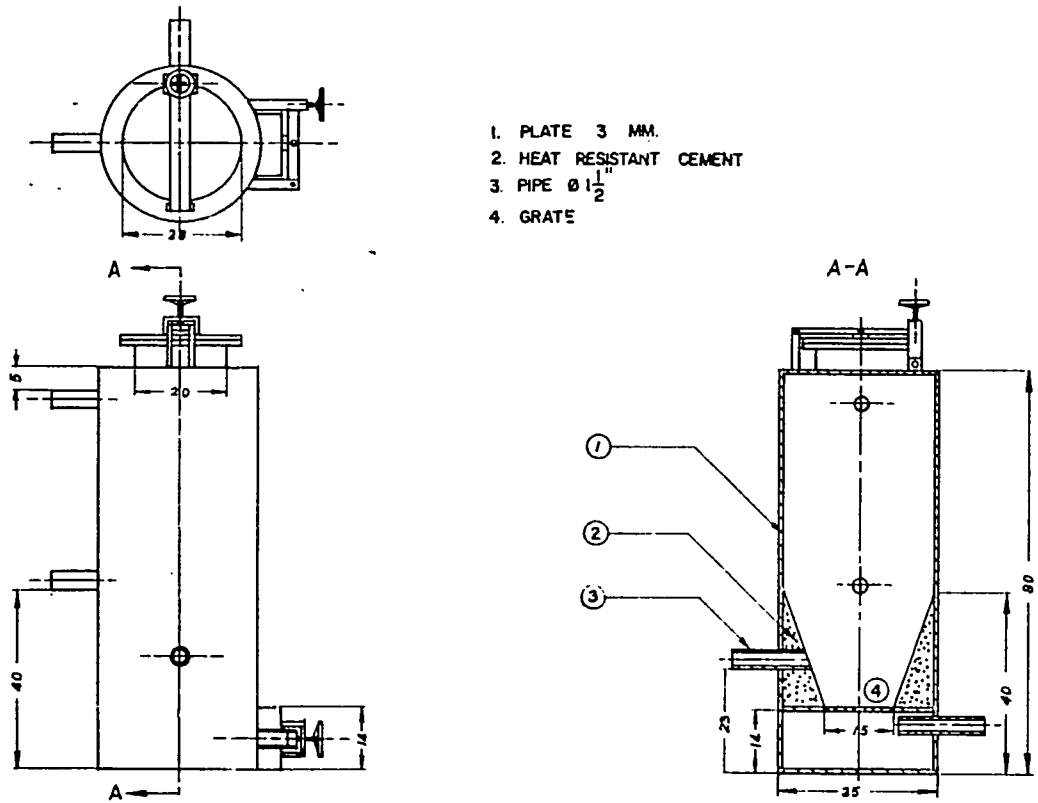

4/25/84	BIOMASS GASIFICATION PROJECT	800 W GASIFIER SYSTEM
SCALE 1:10	Detail REACTOR	Drawing Nº
		Designed

Figure A7-1 500 We Gasifier (Unit Number 2) Updraft Charcoal Gasifier.

Previous Page Blank

Figure A7-2 - 500 We Gasifier(Unit Number 2)
Updraft Charcoal Gasifier

Preceding Page Blank

ANNEX VIII

Previous Page Blank

ANNEX 8

500 We GASIFIER (UNIT NUMBER 3)

This 500 We Downdraft Charcoal Gasifier prototype was designed, constructed and tested at Chulalongkorn University. This is the construction and testing report.

A. INTRODUCTION

The major handicap of the 500 We gasifier (unit number 1) was the problem of central tuyere deformation and the need to replace it every so many hours (from operational data of unit number 1 the central air inlet pipe had to be removed after 250 hours of use). The intent behind this particular design was to replace the central tuyere by side tuyeres in the hope of developing a gasifier in which no parts would have to be replaced after so many hours of operation.

B. DETAILS OF THE SIDE TUYERES DOWNDRAFT GASIFIER

The design of this small downdraft gasifier is shown in the blueprint presented under the heading 500 We Gasifier (unit 3). The main features of the gasification chamber are like units 1,2 and 4 in that its small dimensions are meant to generate in the neighbor hood of 500 We. The gasoline engine this system was attached to was a 5 hp 206 cc. (65.09 x 61.31 mm) Briggs and Straton single cylinder engine (connected to a 1 kWe, 220 V 50 cycle AC generator, 3000 rpm manufactured by Daichi Electric Company and called 'Winchester Super Generator', 5 hp at 3600 rpm, max torque 7.66 ft-lb at 3200 rpm, 5 hp at 3600 rpm, L-head air cooled type). The construction and testing sequence that was followed is listed as follows:

a. The unit was originally fitted with 2 tuyeres of 1.1 cm each coming in at 18 cm from the grate. Upon construction and testing of the unit, it was found that the power output was of the order of 300 We at 220 V only, well below the expected 700 We.

b. The problem with design a was believed to be the height of the reduction zone. Thus we increased the reduction (from throat of gasifier to grate) zone from 10 cm to 18 cm. Again upon testing only 300 We of power output was obtained.

c. From design a a third tuyere was installed, and the inside diameters increased to 1.2 cm, and the unit retested. Again only a power output of 300 We was obtained.

d. The next design was to close all 3 tuyeres, and put in a 3.8 ID central tuyere, and have the unit retested. Again a power output of only 300 We was obtained as before.

e. We came back to design c but put in a 4th tuyere of 1.2 cm. The unit was again tested and again only a power output of 300 We was obtained.

f. We decided to change the basic design to include a throat some 8 cm below the side tuyeres of design e. Again a power output of only 300 We was obtained.

g. It was then decided to use design "f" with a central 3.8 ID tuyere and to close off the side tuyeres. The modification was made, the unit tested, and this time the power output obtained was 700 We as expected.

h. In order to check again into the cause of the side tuyere design malfunctioning it was decided to have 5 side tuyeres of 1.6 cm diameter installed.The power output obtained was 700 We as desired.

C. OPERATION OF THE GASIFIER

The start-up operations were fairly similar to the start-up operations of units 1 and 2. However, the major difference was that during the initial combustion of the central part of the hearth through the ignition pipe it was necessary to close all six tuyeres to allow for the flames to propagate downward towards the grate (the grate cleaning port being open). The closing off of these tuyeres during the heating sequence was found to be time-consuming as the operator had to go around and close off all the tuyeres with pieces of wood. Thus,having for a small 500 We gasifier worry about closing off 6 tuyeres is an additional operator concern. A second operator concern is the element of safety if one of the tuyere plugs were to fall off or if flames accidentally shoot out from the tuyeres during warm-up of the charcoal bed with a blower.

From limited operation of this gasifier the following statistics were obtained

- charcoal consumption 1.5 kg/hp-h (2.01 kg/kWe-h)
- charcoal water content (obtained from one charcoal sample) 8.6%
- regular gasoline estimated consumption 380 cc./hp-h (the estimation comes from the brochures obtained with the engine)
- At the maximum load of 540 We where voltage could be maintained at 220 V the following gas composition was obtained from an Orsat gas meter (the fine calibration of which was not made) with the following results:

	CO	O	CO
1st sample	5.6	1.1	24.5
2nd sample	4	0.7	19.6

The values are in percentages. The hydrogen concentration value was not obtained.

The qualitative gas quality of the gasifier was determined by opening the engine and inspecting solid and liquid deposits after a few hours of operation. The engine was clean and showed no solid and liquid deposits. A test lasting several hundred hours was not made on this unit. However, this unit was able to produce a gas much cleaner than from the updraft

unit (unit number 2). It was not determined whether the gas was of better or worse quality with regards to tars and particulates than unit number 1 (also a downdraft unit). Another factor discovered during the development of this gasifier was that the smooth operation of the gasifier was very sensitive to charcoal size. From the limited experience of this study it was felt that the charcoal size should be below 3 cubic inches. For larger size charcoal pieces the system would sometimes shut down by itself indicating bad flow of the solid fuel.

D. SUMMARY AND CONCLUSIONS

The summary and conclusions of the development of the 500 We downdraft gasifier with side tuyeres (unit number 3) may be listed as follows:

- The concept of having several side tuyeres as against one central tuyere in a small (500 We) gasifier has been shown to be more troublesome for the operator especially during start-up of the engine.

- On a small 500 We gasifier unit it may not always be necessary to incorporate an air cooler and a cyclone as cooling occurs by exposure of the hot metal parts to ambient air and as large particulate removal may be done in a stone impingement filter.

- The gas quality of this downdraft gasifier was found by engine inspection after a period of operation to be superior to the updraft gasifier (unit number 2) of similar size.

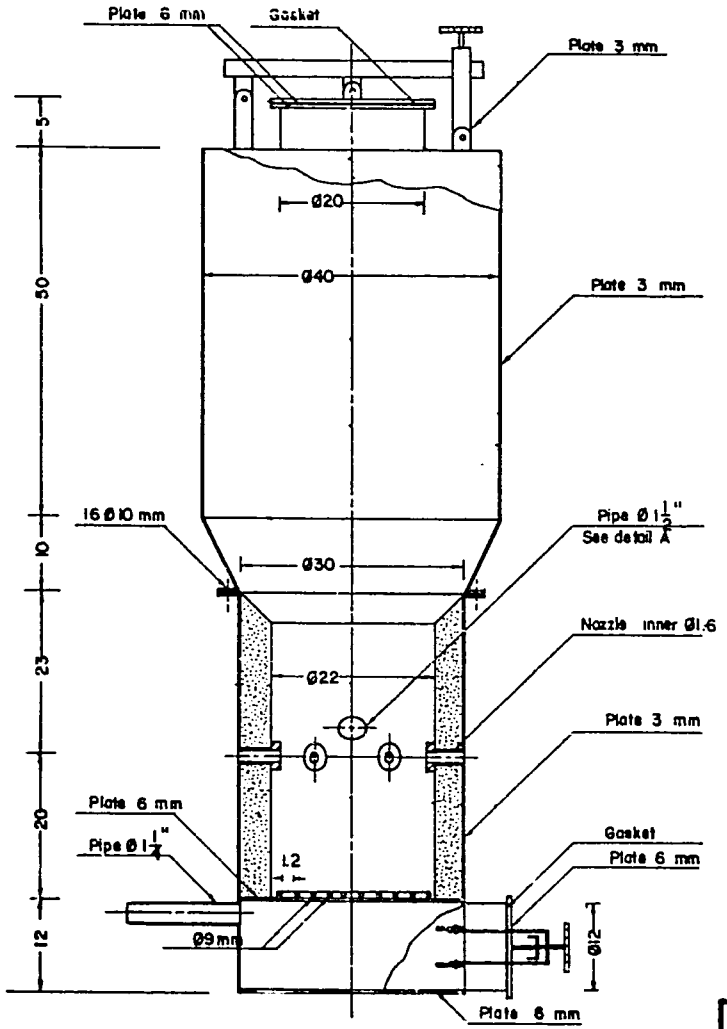

REACTOR 1:6

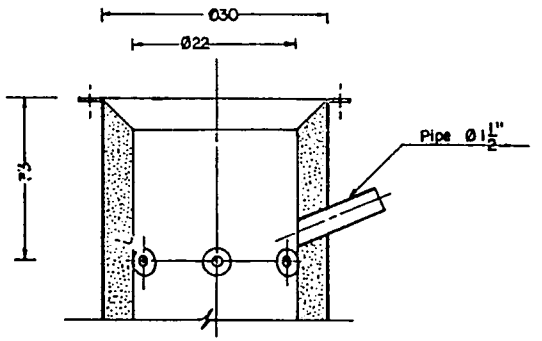

DETAIL "A" 1:6

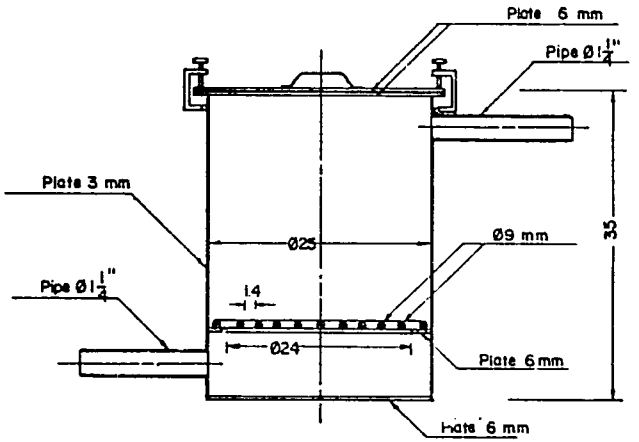

COOLER 1:5

4/25/82	BIOMASS GASIFICATION PROJECT	800W GASIFIER SYSTEM
SCALE 1:6 / 1:5	DETAIL REACTOR & COOLER	DRAWING Nº 1
		DESIGNED

Figure A8-1 - 500 We Gasifier (Unit Number 3)

ANNEX IX

Previous Page Blank

ANNEX 9

500 We GASIFIER (UNIT NUMBER 4)

This 500 We Downdraft Charcoal Gasifier prototype was designed, constructed and partially tested at Chulalongkorn University. This is the construction and testing report.

A. INTRODUCTION

Based on the experience of this project and in particular on the three 500 We prototypes (unit number 1: downdraft central tuyere; unit number two: updraft; unit number three: downdraft with six side tuyeres) it was felt that the most practical design was unit number one, a unit designed by the Prince of Songkhla University. However it was felt that unit number one had several details where improvements could be made, namely a simpler start-up procedure, the installation of a battery operated fan to replace a hand operated fan for start-ups, compactness of size for the entire system, removal of the air cooler, and reduction in volume of the reduction zone to avoid dead zones.

B. DETAILS OF THE DOWNDRAFT CENTRAL TUYERE GASIFIER (UNIT NUMBER 4)

The design of this gasifier is shown in the blueprint presented in this section. The gasifier like units 1,2,3 was designed to generate also in the neighborhood of 500 We. The unit has a similar concept as unit number one, namely a downdraft central tuyere. The main differences lie in the distance between central tuyere to the grate which is 18 cm (for unit number 1 this figure was 22.5 cm), and the slight throat which is 16.5 cm in diameter (for unit number 1 this figure was 15 cm). In this unit the ignition pipe was designed horizontally into the middle of the gasifier hearth. The gas cleaning train was made up of a cyclone, a stone impingement filter followed by a rice husk filter and a final cotton safety filter. The engine to which the gasifier was attached to is 5 hp a Kubota gasoline engine (GS 200 engine type, 4 cycles, forced air cooling, 1 cylinder with 201 cm^3 displacement, 69 x 54 mm, 5.2 hp at 3600 rpm, 1.04 kg-m torque at 3200 rpm, electronic ignition, splash lubrication).

Although there had been talk of designing a battery operated blower for ease of start-up, the idea was not implemented as it was felt that during operation substantial energy would have to be used for battery recharging.

The system is equipped with a governor and changes in loads from no load to 500 watts can be handled by the built in governor. Thus there is no need for a manual system for changes of loads as described in unit number one. This particular governor action depends on the quality of the generator used and it is has been found that many generators found in Thailand are not able to maintain the proper rpm with the governor action.

C. OPERATION OF THE GASIFIER

The start-up operations of this gasifier is done by filling up the gasifier, keeping the top hatch open, and lighting the charcoal through the ignition pipe with the help of a hand held blower, using previously

mentioned methods for 4 minutes. Then close the top hatch and open the bottom hatch and place the hand blower at the central tuyere inlet pipe for another 3 minutes to ignite the oxidation and reduction zones homogeneously. The gas may now be tested in the air mixing pipe just before the engine by burning the gas with a match. With experience the operator will have a feel for gas quality without burning the gas and will be able to start the engine after at least 7 minutes from charcoal ignition (with bottom hatch now closed). Operation of the gasifier was done for several hours and basic information obtained may be described as follows:

- Charcoal consumption is 1.5 kg/hp-h (2.01 kg/kWe-h)
- Charcoal water content (obtained from one charcoal sample) 8.6%
- maximum load at 220 V was 500 We
- the gas quality was good and comparable to units 1 and 3 (500 We) based on inspection of combustion chamber (based on 80 hours of operation)

D. SUMMARY AND CONCLUSIONS

The summary and conclusions of the development of the 500 We downdraft central tuyere charcoal gasifier (unit number 4) may be listed as follows:

- The start-up and operation of this gasifier is the simplest of all four 500 We gasifiers built.
- The gas quality with regards to tars and particulates is as good as units 1 and 3 based on engine inspection, the power output of this unit was rated at about 500 We for 220 V.
- On this small gasifier it was found that it was not necessary to have an air cooler as cooling occurred during flow of gas through the system. It may also not be necessary to have a cyclone.
- Based on limited operation and testing, this particular unit incorporates advantages learned from the previous three 500 We units built and should be optimized and implemented.

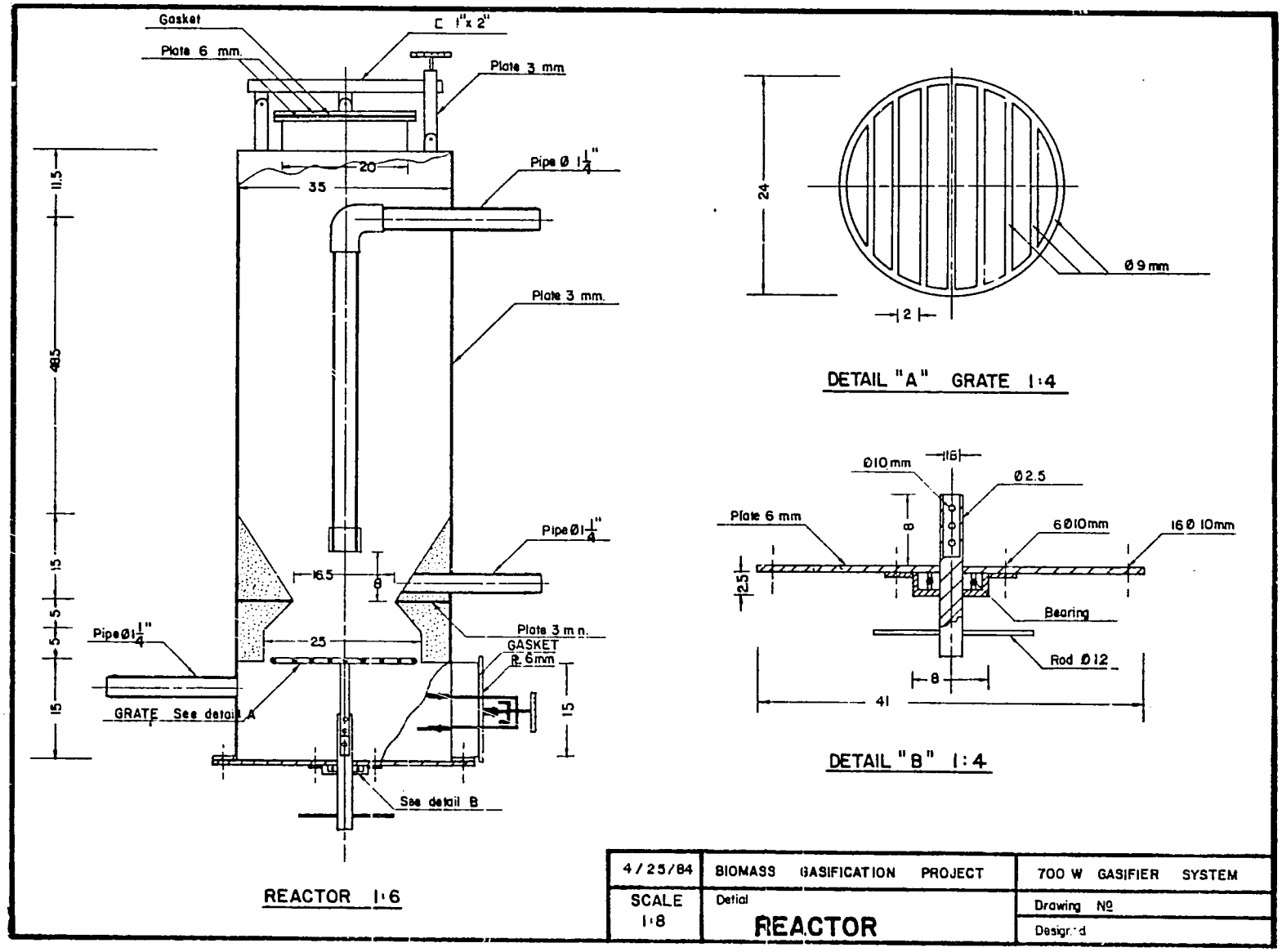

Figure A9-1 - 500 We Gasifier (Unit Number 4)

Previous Page Blank

ANNEX X

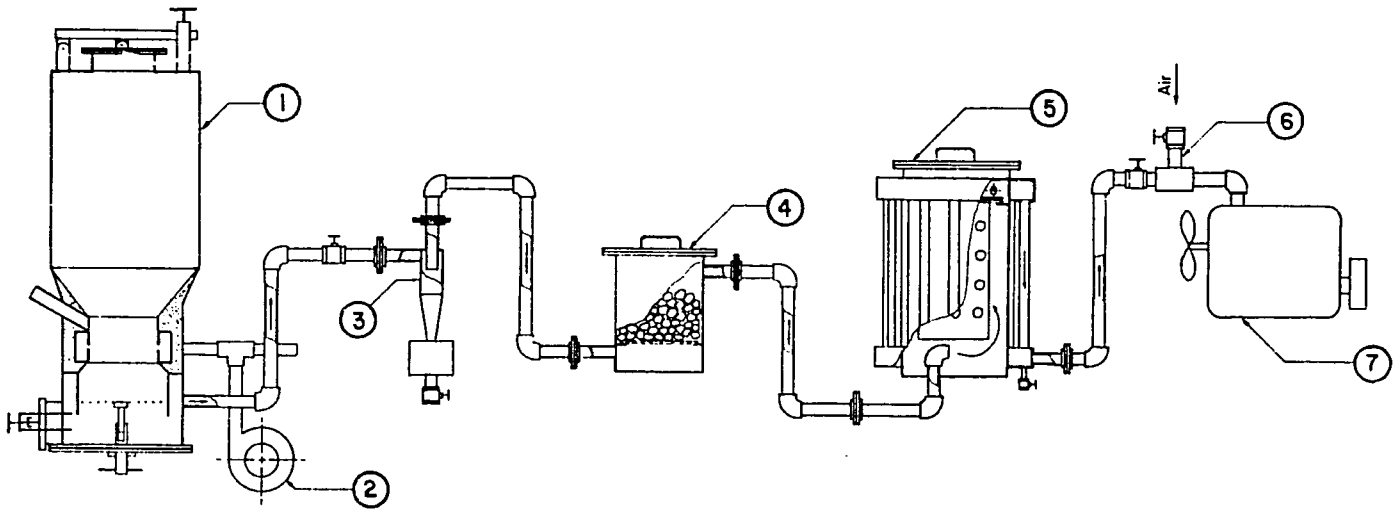

1. REACTOR
2. BLOWER
3. CYCLONE
4. COURSE FILTER
5. COOLER AND FINE FILTER
6. MIXER
7. ENGINE AND GENERATOR

2/29/84	BIOMASS GASIFICATION PROJECT	2 KW GASIFIER SYSTEM
SCALE 1:15	DETAIL FLOW DIAGRAM	DRAWING Nº 1
		DESIGNED

Figure A11-1 - 7 HP Gasifier(Unit Number 2), Overall System.

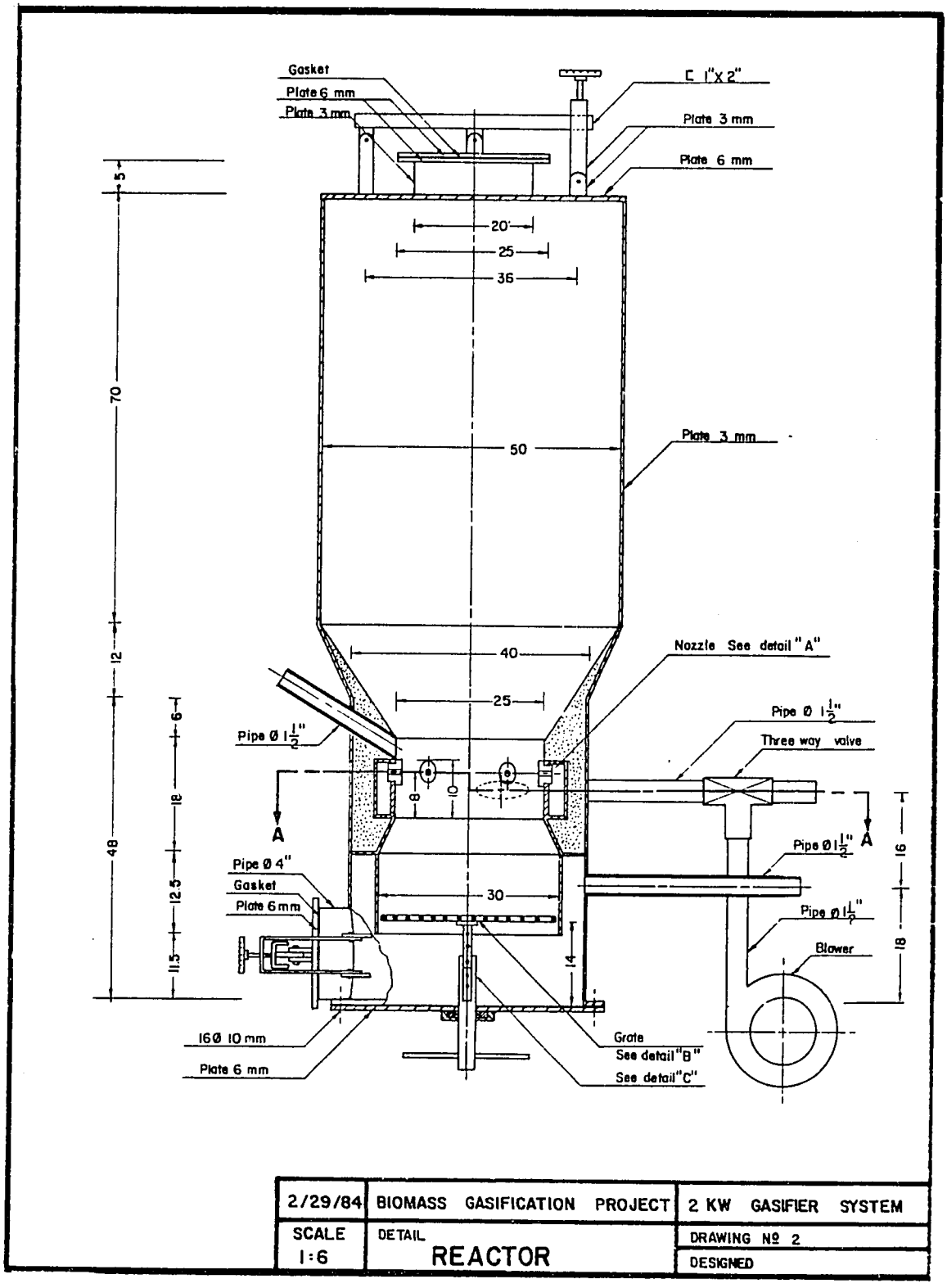

Figure A11-2 - 7 HP Gasifier (Unit Number 2), Reactor.

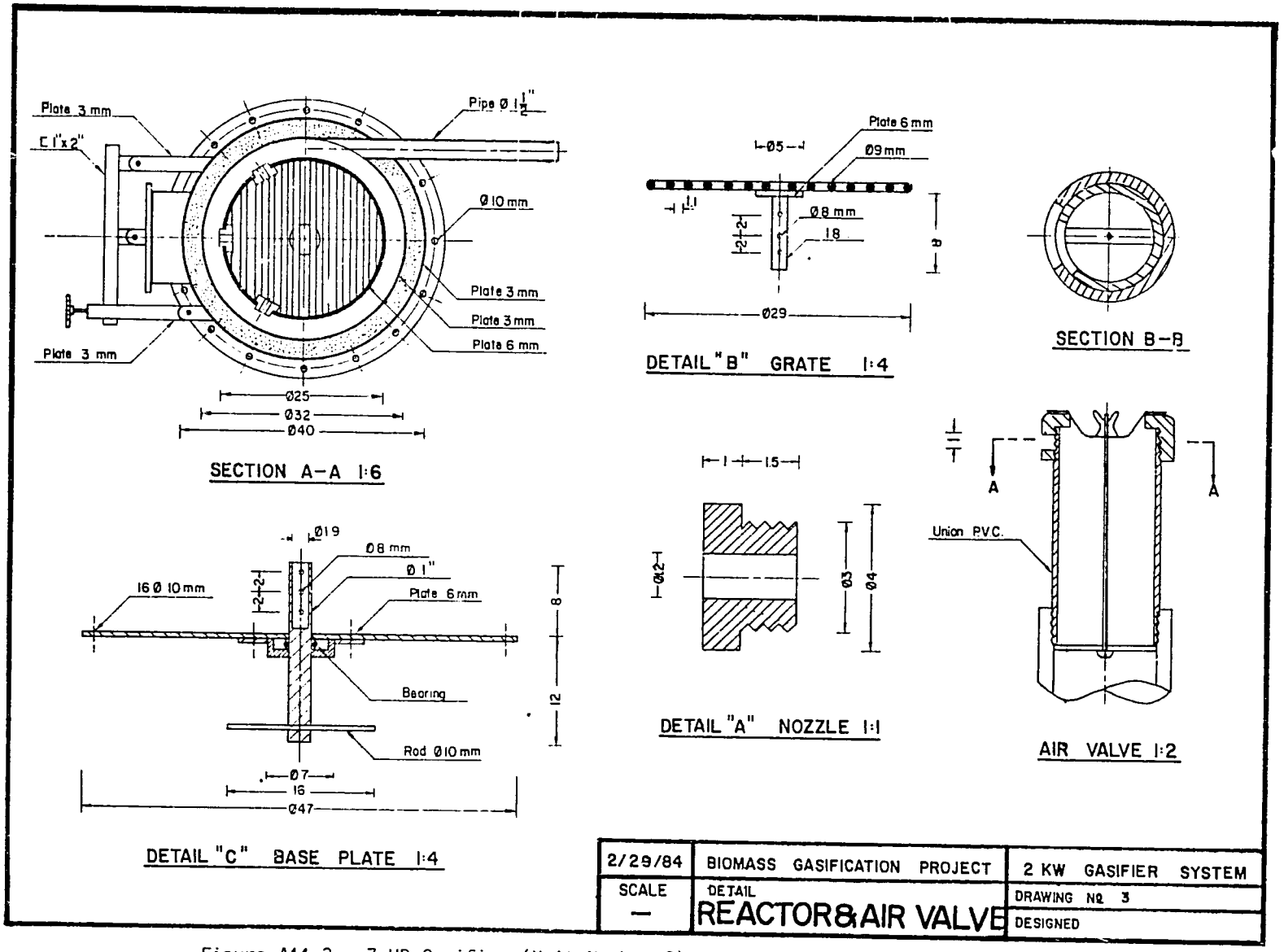

Figure A11-3 - 7 HP Gasifier (Unit Number 2), Tuyere and Grate Systems.

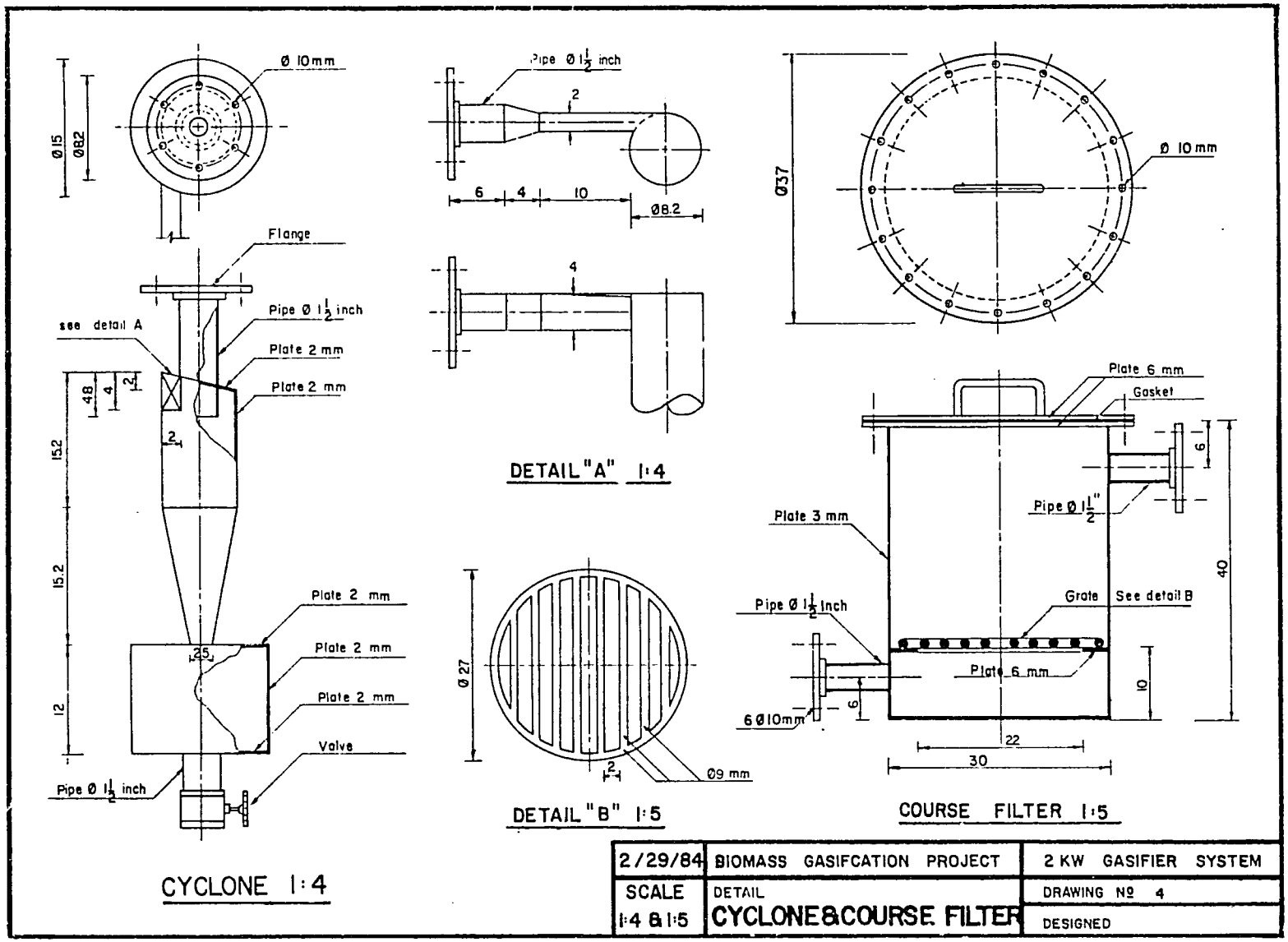

Figure A11-4 - 7HP Gasifier (Unit Number 2), Cyclones and Coarse Filter Systems.

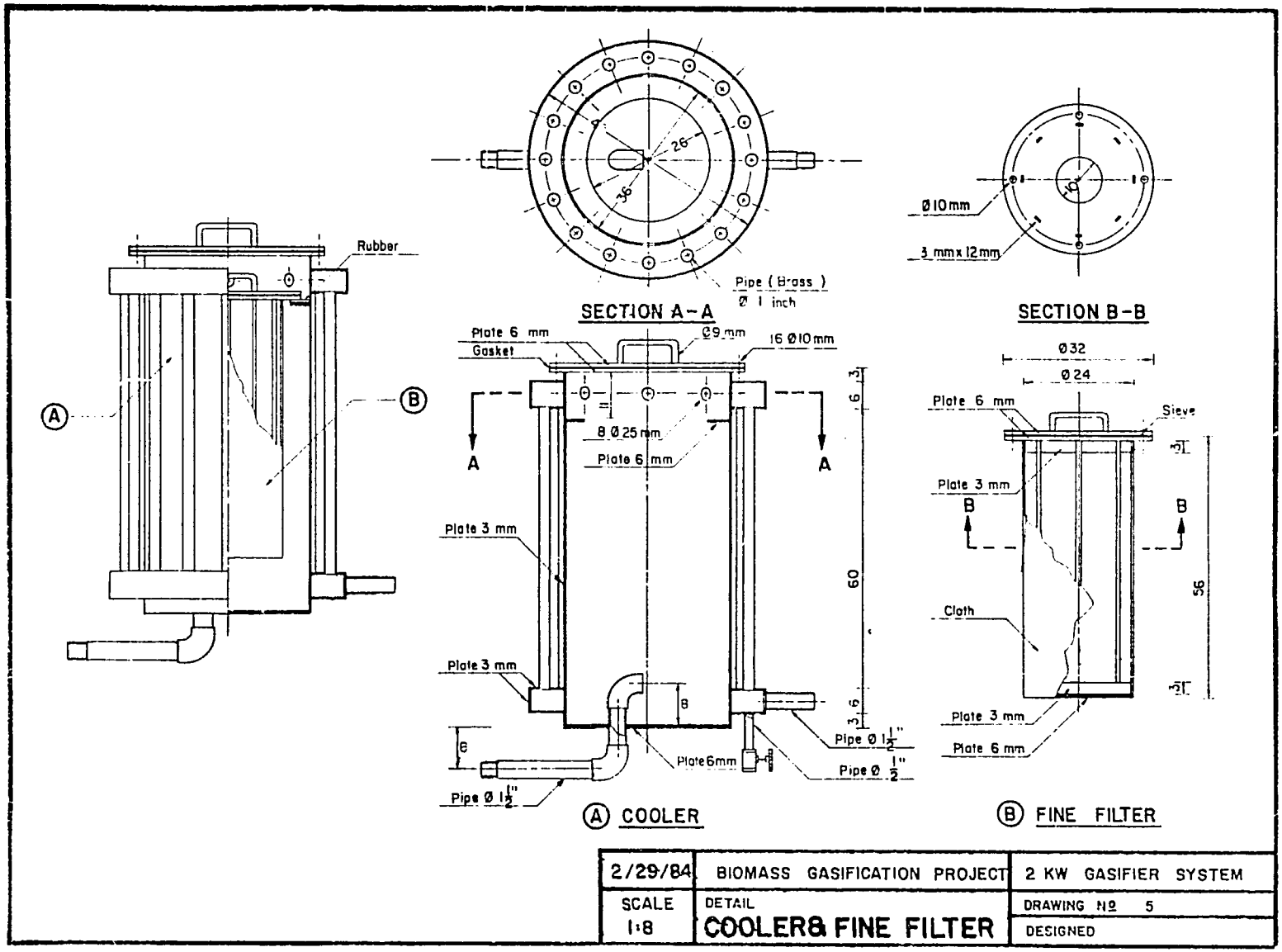

Figure A.1-5 - 7 HP Gasifier (Unit Number 1), Cooler and Fine Filter Systems

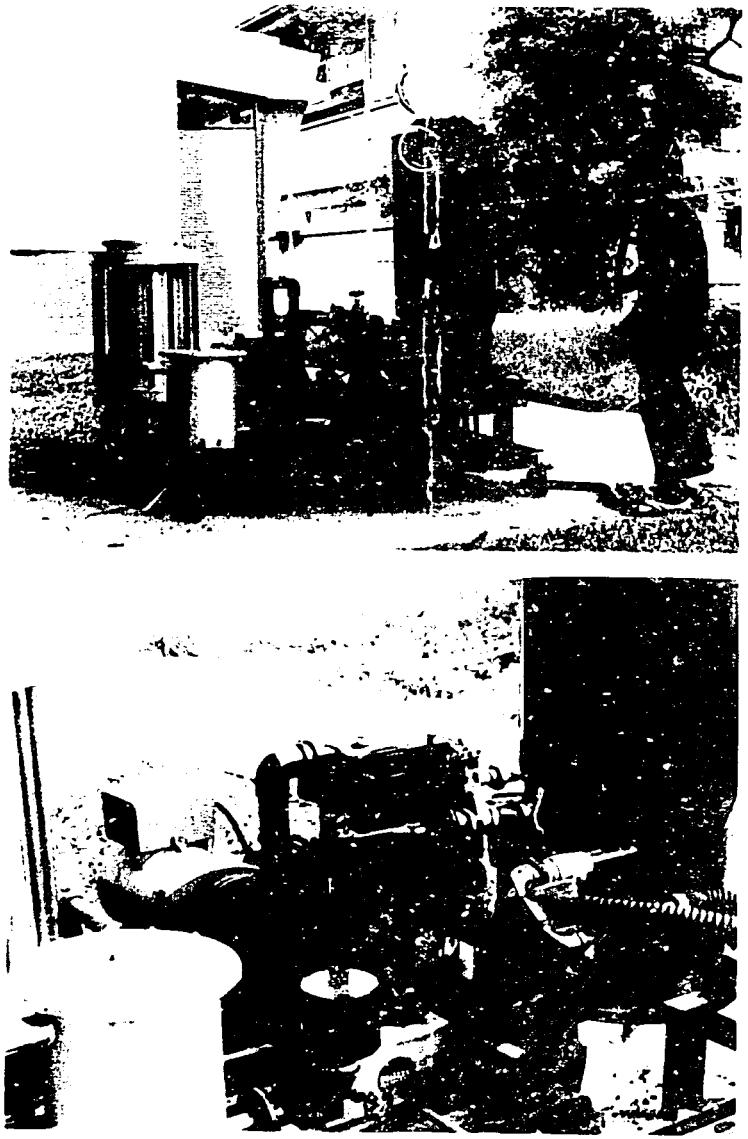

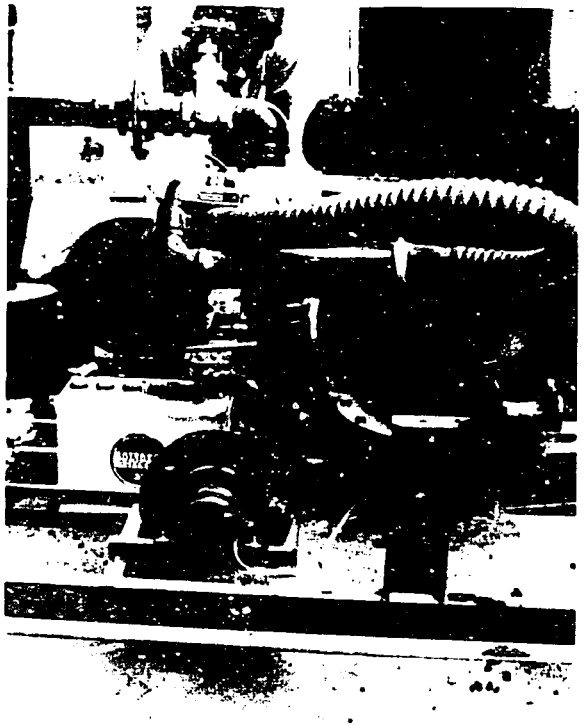

Figure A11-6 - Details of 7 HP Gasifier (unit Number 2)

Previous Page Blank

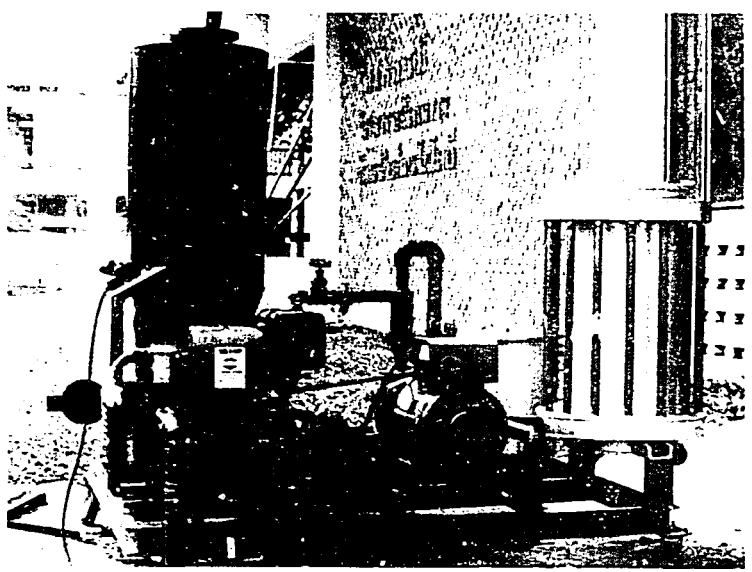

Figure A11-7 - Details of 7 HP Gasifier (Unit Number 2)

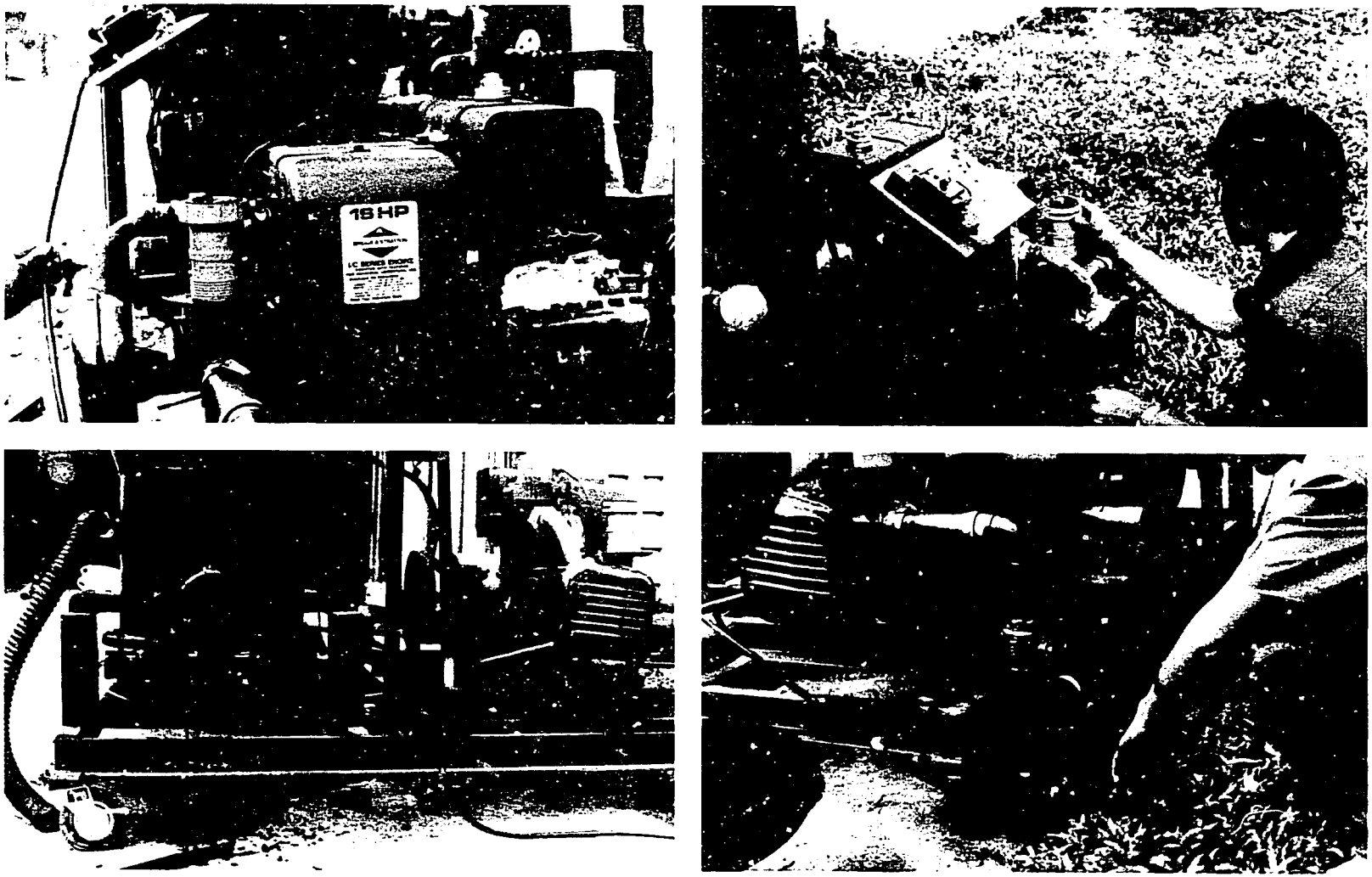

Figure A11-8 - Details of 7 HP Gasifier (Unit Number 2)

Previous Page Blank

ANNEX XII

ANNEX 12

7 HP GASIFIER (UNIT NUMBER 3)

This 7 hp charcoal downdraft gasifier prototype coupled to a diesel engine was designed, constructed and tested at Chulalongkorn University. This is the construction and testing report.

A. INTRODUCTION

The basis of this gasifier system was that many households in rural areas owned diesel engines of about 7 hp. Since we knew from the manufacturer that placing a spark plug in such compact engines was not possible (we made a request for this to the YANMAR Company in Bangkok and they replied that it was not possible to put in spark plugs and turn it into a gasoline engine) we wanted to know what diesel fuel replacement could be obtained with producr gas on a dual fuel mode. Such diesel engines are so widespread in Thailand and are used for such a wide variety of applications: land tilling, water pumping, night-time electricity generation, for light truck transportation; since hundreds of thousands of units have been sold throughout the country it was felt that the replacement of a fraction of the diesel oil consumed would lead to a substantial saving in foreign exchange.

B. DETAILS OF THE GASIFIER AND ENGINE

Figure A12-1 shows the details of the 7 hp gasifier (unit number 3). The diameter of the hearth area where the side tuyeres protrude is 23 cm (as against 25 cm for unit number 2). Distance from tuyere to grate is 20 cm (in unit number 2 it is about 25 cm).

The engine used has the following specifications:

- Type: TA80-H 4 cycle diesel engine
- Displacement: 487 cm (84 x 88 mm)
- Maximum power: 8.5 hp at 2400 rpm
- Compression ratio: 22

The cleaning system used is presented in Annex 17 and includes a cyclone, a stone impingement filter, a cold fabric filter and a final filter.

C. THE OPERATION OF THE GASIFIER

The start-up procedure was as follows:

- The hopper is filled with 1 in charcoal pieces and the top hatch is left open.
- Ignite the charcoal with a diesel oil impregnated cloth using the slanted ignition pipe with the help of a hand held blower. Do

this for two minutes after the charcoal has ignited. Then close the slanted ignition pipe.

- Now blow the blower through the air entrance pipe for a total of 4 minutes to heat the area near the tuyeres towards the top.

- Now open the ash door and close the top hatch and use the blower for another 3 minutes to heat the area near the tuyeres but towards the bottom.

- After the above sequence, close the ash door and prepare to start the diesel engine.

- Before explaining the start-up procedure the engine hook up must be presented first. The producer gas pipe connection is placed in at the ordinary diesel engine air inlet, and forms a tee with the air inlet. The producer gas pipe is not equipped with a valve but the air inlet can be regulated with a valve. Another point of importance is that the governor that comes with the engine controls diesel injection and the air valve must be adjusted manually. We now open the air valve fully and start the diesel engine and run at no load. The producer gas will be sucked into the engine automatically but since the fully opened air valve offers little resistance to air flow what enters will be mostly air. The next step is to put a load on the system. The procedure is to manually open the diesel injection setting to a predetermined point, which will result in the engine running slightly stronger, then as the load is put on the voltage will come down to 220V. We now optimize air flow by regulating the air valve to the minimum level below which a white smoke forms at the exhaust. The engine is now operating on a dual fuel mode. For additional load the diesel fuel injection will be regulated by the governor, but there is a need to manually adjust the air valve as no governor action plays on the air valve (it would also be too cumbersome to engineer a dual governor action).

The operating date obtained may be summarized as follows:

Load (watts)	Diesel Oil (cc/min)	RPM 1000	1330	1500	1660
500	8,8,8	2,2,2	4,4,4	1	3,3
1000	10,10,10	4,4,4	5,5,5,	2	4,3,3
1500	12,13,12,12	7,7,7,8	6,6,6,5	2.5	4,3,4,3,3
2000	15,14,14,14	12,12	7,7,7	4	4,4,5,5
2300	16,16,16		11,10,10,10	6	5,5
3000	24,24,23,24				16,16

This data is presented after analysis in figure A12-2.

D. SUMMARY AND CONCLUSIONS

The following points are the summary and conclusions of the results obtained:

- The dual fuel operation of the 7 hp gasifier indicates the feasibility of replacing between 50 to 80 percent of the diesel oil injection, depending on loads and rpm.

- The dual fuel operation is not fully automatic. A governor and an operator would be needed to operate the system on a variable load mode. It, however, can operate on a steady load with no operators.

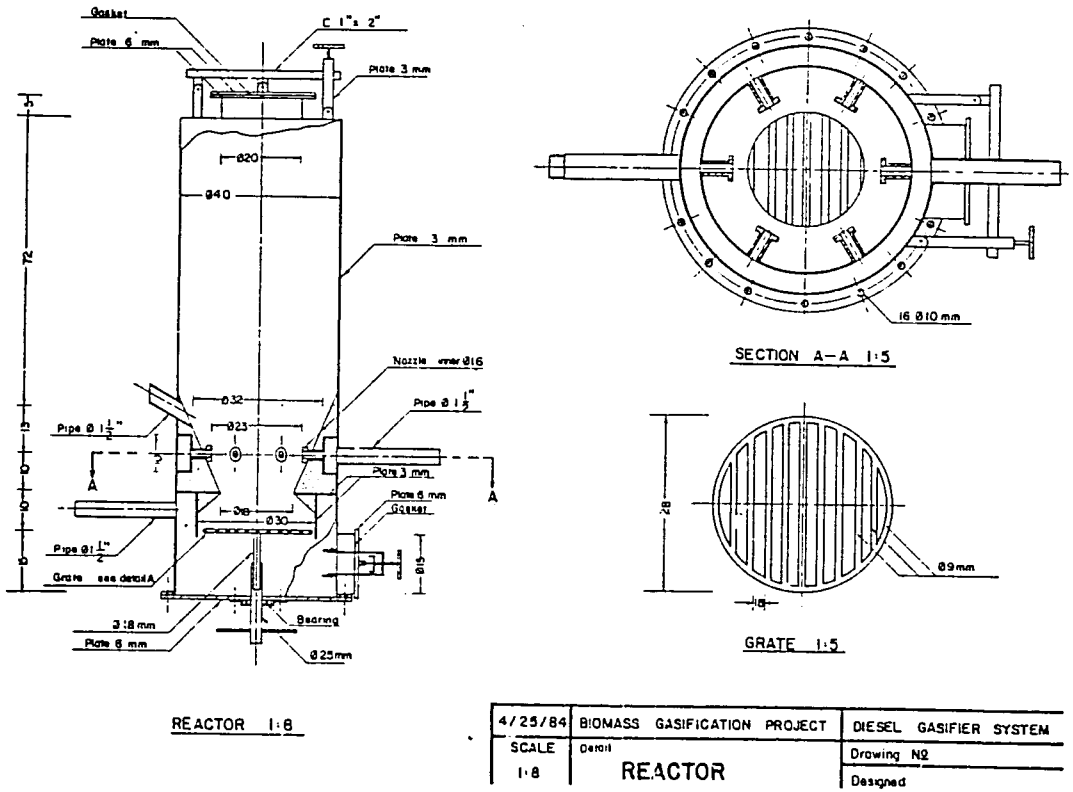

Figure A 12-1 - 7 HP Gasifier (Unit Number 3), Reactor

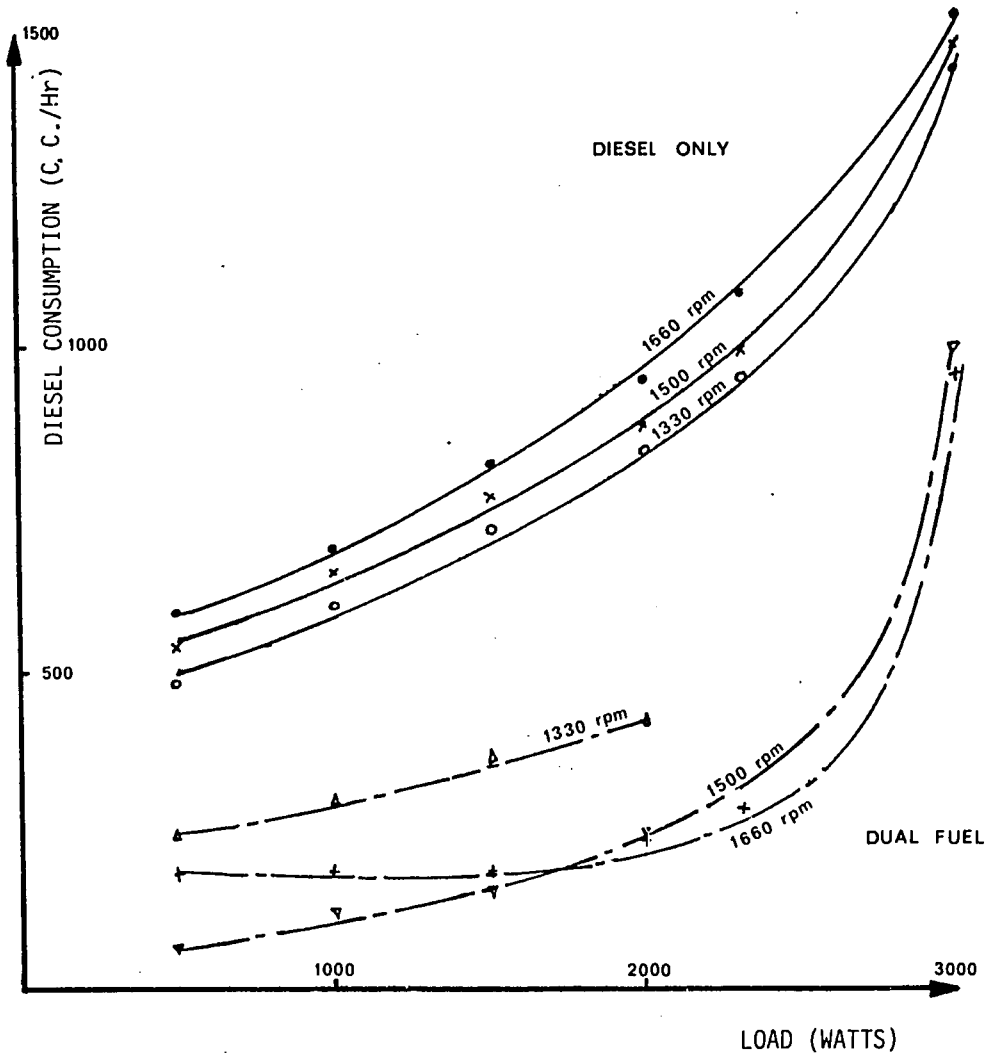

Figure A12-2 - Experimental Data for 7 HP Gasifier (Unit Number 3)

Previous Page Blank

ANNEX XIII

Previous Page Blank

ANNEX 13

25 kWe GASIFIER SYSTEM

A. INTRODUCTION

The original intent of the project, as previously mentioned had been to import a gasifier from abroad, possibly from the United States, in the range of 20 to 50 kWe and make it operate with the necessary foreign expertise. Two developments occurred in the initial stages of the project. Firstly, the Renewable Non-Conventional Energy project consultants, META Systems Inc., were not able to find a manufacturer who would sell and guarantee the performance of a gasifier. This was in 1981 and 1982. Then the project leaders felt that the original objectives should be changed from a direct transfer of gasifier technology from a country like the U.S. to the local development of such a unit. It was finally agreed to design a 25 kWe gasifier system locally. The unit would be dual fueled and be able to generate 25 kWe of using from wood and corn cobs as fuel.

B. DESIGN OF THE GASIFIER

The design of the gasifier was a design based on the experience of the University of California at Davis team. Dr. Albrecht Kaupp, our foreign consultant and at the time at U.C. Davis, supplied us with the design presented in Figure A13-1 for use with corn cobs. The main feature was a rotating grate and an open top. It was decided to retain that unit for the gasification chamber.

For the design of the cleaning train it was felt by the biomass gasification team leader that a cyclone followed by a hot filter followed by a cooler would be best; but to find the necessary fabric to design a hot filter was very difficult in Thailand. It was thus decided to clean the gas using a cyclone followed by a packed bed water scrubber followed by a cooler. The cleaning train finally agreed upon is presented in Figures A13-2 and Figure A13-3.

The unit was commissioned to a private company in Chiang Mai (the Mining Industry Iron Works of Chiang Mai, Tung Hotel Road, Chiang Mai). During the construction and initial testing of the system the following things happened.

- The contractor had some doubts about the open top geometry of the gasifier chamber since this design would supply too much oxygen to the gasifier and generate a substandard producer gas. It was thus decided to put in a top cover that could be opened or closed and on which a small hatch would be placed. In addition, it was decided to place a slanted ignition port in order to start the gasifier.

- Although not indicated in the designs, the contractor and component leader agreed that there should be a motor to rotate the grate at a very slow speed in the event that a mechanical drive would be needed.

- During the early testing of the unit at the constructor's workshop it was found that the tar produced during gasification would plug the top

of the scrubber. A solution was found by adding in the scrubbing water a wood tar solvent found in a shop in Chiang Mai but of unknown constitution. This completely eliminated the problem.

Pictures of the unit are shown in Figure A13-4a,b,c,d, Figure A13-5a,b,c,d and Figure A13- 6a,b,c.

One major problem found with this unit was that the gas composition seemed to be of low quality. Although gas measurement equipment was not available, it was found that replacement of diesel was at most 19% on some loads and less than that for other loads. The problem was traced to an erroneous manufacture of the reduction zone where throat to grate distance was less than sketched in Figure A13-1. There was also the presence of tars and some particulates in the system. At about this time in the testing of the unit the National Energy Administration called upon the Biomass Component of the Renewable Non-conventional Energy Project to demonstrate the 25 kWe unit in Chiang Mai Province within matters of days (early 1984). It was thus decided between contractor and component leader that the gasifier would have to be redesigned for use with wood but the remaining system would remain intact. The gasification chamber would now have a longer reduction zone with a different grate; there would be an enlarged raw material hopper but without a mechanical grate rotating apparatus. The design is presented in Figure A13-7, and pictures of the redesigned system is shown in Figure A13-8, Figure A13-9, and Figures A13-9a,b.

C. TESTING PROGRAM

The testing program for the 25 kWe gasifier was performed as follows:

Objective

The objective of this study is to investigate a diesel engine performance operating on diesel fuel only and on diesel fuel with producer gas as a supplement.

Instrumentation

The experiments were conducted at the Automotive Building, Department of Mechanical Engineering, Chiang Mai University. A hydraulic torque dynamometer and an engine test bench were used in this study. A new 35 kW diesel engine was mounted on the engine test bench. A downdraft wood gasifier with the completed cooling system and dust-tar removal system was set and placed near the test bench.

Test Procedure

Two series of tests were conducted as follows:

(1) Testing the engine on diesel fuel only:
The experiments were conducted at engine speeds of 1100, 1300, 1500 and 1750 rpm respectively. At a particular engine speed, the engine load was gradually increased by adjusting the hydraulic load. The data which were measured and collected included the engine speed (rpm), the brake torque (N-m) and the rate of fuel consumption (liter/hr).

(2) Testing the diesel engine on diesel fuel and producer gas as a supplement:
The experiments were also repeated at the same engine speeds of 1100, 1200, 1500 and 1750 rpm respectively. Producer gas from the gasifier was connected to the mixing chamber through a regulator. The experiments were repeated using the same previous procedure.

Results

The brake power, BP (kW) and the brake specific fuel comsumption, BSFC (litre/kW-hr) can be calculated using the following equations.

BP = brake torque (N-m) x engine speed (rpm) x 2 /60
BSFC = rate of fuel consumption/BP

The results of the brake power and the brake specific fuel consumption of the diesel engine performance at constant speed when running on both diesel fuel, and diesel fuel with producer gas supplement are shown in Table 1. The results of fuel consumption rates with and without producer gas supplement at 1100, 1300, 1500 and 1750 rpm are shown in Figure A13-10, A13-11,A13-12 and A13-14 respectively.

Discussions

It can be seen from Figure 1,2 and 3 that the rates of diesel fuel consumption of the diesel engine operating on diesel fuel with supplement producer gas are lower than the ones for diesel fuel alone. At an engine speed of 1500 rpm, which is the operating condition of the diesel engine connected to the A/C generator, the favorable rate of fuel consumption occurred when the brake power was over 9 kW. Also, the diesel fuel saving was found to vary between 35-40% at medium load (16-20 kW) and at the same engine speed of 1500 rpm.

However, operating a diesel fuel at a speed that was higher than the setting condition proved to be very ineffective. Figure A13-4 indicates that the rates of fuel consumption with supplement producer gas were higher than the ones for diesel fuel alone. This was due to the operating of the engine regulator.

Conclusions

At the normal operating speed of 1500 rpm and at a medium load, the diesel fuel saving was about 35-40%.

D. SUMMARY AND CONCLUSIONS

The Summary and conclusions of the design, construction and testing of the 25 kWe gasifier system.

- The 25 kWe gasifier was made to operate up to and beyond 25 kWe.

- The dual fuel system savings data indicated that 35 to 40% of diesel fuel saving could be obtained at a normal operating speed of 1500 rpm and a medium load using wood chips.

Particulate and tar presence could not be quantified in both the original and final designs, although in the original design inspection of the parts leading to the engine showed some presence of deposits.

F. NOTES

The engine used with the 25 kWe gasifier had the following specifications.

Tractor engine, Ford Motor Company
4 cyclinders, 4.4 liters, 128 hp at 3600 rpm.

TABLE 13-1

DIESEL ENGINE PERFORMANCE
WITHOUT SUPPLEMENT GAS
AT CONSTANT SPEED

RPM	POWER WATT	F.CONSUMED L/HOUR	SFC L/KWHR
1100	172.79	3.715	21.500
	403.17	3.754	9.311
	794.82	3.846	4.839
	1382.30	3.944	2.853
	2073.45	4.083	1.969
	4093.31	4.438	1.084
	6853.90	5.028	0.734
	8178.60	5.278	0.645
1300	204.20	2.573	12.600
	775.97	2.683	3.458
	1511.11	2.858	1.891
	2464.06	3.087	1.253
	3811.80	3.326	0.873
	7541.92	4.417	0.586
	12456.40	5.845	0.469
	15043.00	6.593	0.438
1500	314.16	3.093	9.845
	942.48	3.279	3.479
	1916.37	3.522	1.838
	3188.72	3.734	1.171
	4869.47	4.100	0.842
	9581.86	5.014	0.523
	16571.90	6.766	0.408
	19477.90	7.826	0.402
1750	494.80	4.226	8.541
	1539.40	4.395	2.855
	3115.40	4.698	1.508
	4856.38	5.041	1.038
	7623.60	5.487	0.720
	15118.90	7.377	0.488
	24740.00	10.651	0.431
	29321.50	13.543	0.462

DIESEL ENGINE PERFORMANCE
WITH SUPPLEMENT GAS
AT CONSTANT SPEED

RPM	POWER WATT	F.CONSUMED L/HOUR	SFC L/KWHR
1100	714.19	3.025	4.236
	1198.00	3.478	2.903
	1900.66	3.505	1.844
	3283.00	3.814	1.162
	7452.90	3.589	0.482
	8812.17	3.294	0.374
1300	748.75	3.543	4.732
	1334.13	3.659	2.743
	2695.49	3.947	1.464
	5241.22	4.176	0.797
	11843.80	4.972	0.420
	14158.10	5.389	0.381
1500	769.70	2.683	3.486
	1853.54	4.762	2.569
	3848.45	4.800	1.247
	7853.89	4.986	0.635
	17750.00	4.432	0.250
	21834.07	7.031	0.322
1750	916.30	15.000	16.370
	2419.03	8.257	3.413
	5589.40	7.930	1.419
	12003.50	7.627	0.635
	23182.34	16.514	0.712
	24373.50	16.216	0.665

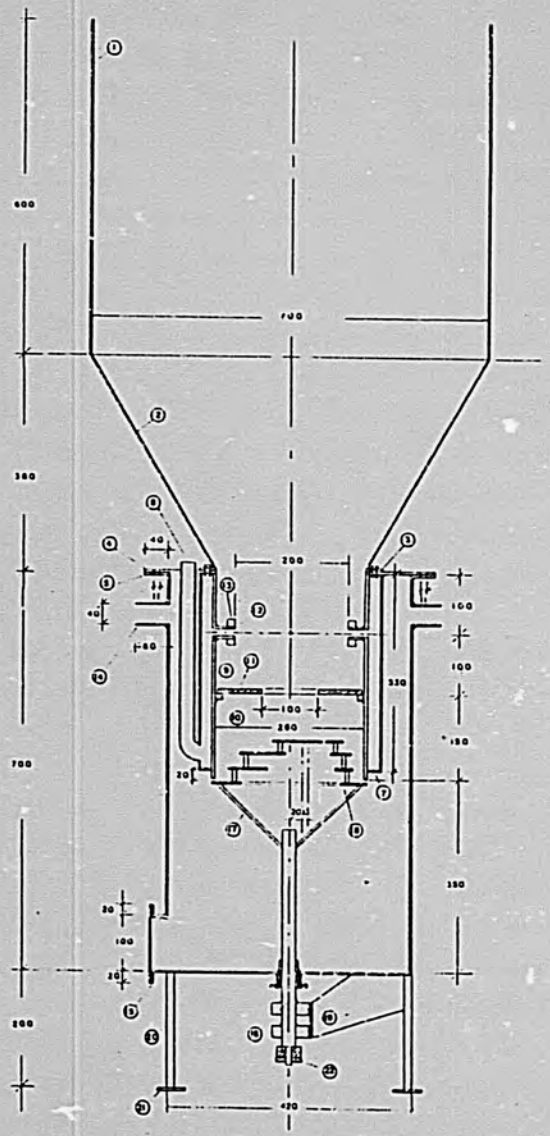

25 KWe GASIFIER GAS PROCESSER SYSTEM

GAS PRODUCER

LIST OF PARTS:

1) CYLINDER, O.D 70 CM., WALL 1-1.5 MM., HEIGHT 80 CM.
2) CONICAL TRANSITION, TOP O. 70 CM., WALL 1-1.5 MM., HEIGHT 38 CM., BOTTOM O. 26 CM.
3) FLANGE, O.D. 34 CM., I.D 26 CM., THICKNESS 5 MM., 6 EQUALLY SPACED HOLES, 9 MM., FOR 8 MM. BOLTS
4) FLANGE, O.D 50 CM., I.D 26 CM., THICKNESS 5-6 MM., 8 EQUALLY SPACED HOLES 11 MM., FOR 10 MM. BOLTS
5) FLANGE, O.D 50 CM., I.D. 42 CM., THICKNESS 5-6 MM., 8 EQUALLY SPACED HOLES NEED TO MATCH 4)
6) CYLINDER FOR AIR CHAMBER, O.D 34 CM., HEIGHT 33 CM., WALL 1-1.5 MM
7) RING, O.D. 31 CM., I.D. 27 CM., WALL 1.5 MM.
8) AIR INLET, STRAIGHT PIPE + 90° ELBOW, DIAM. 3 CM
TWO ON OPPOSITE SIDES ARE OPTIMAL. ONE WILL DO
9) FIRE BOX CYLINDER, O.D. 27 CM., HEIGHT 35 CM., WALL NOT SMALLER THAN 5 MM
10) SUPPORT RING FOR CHOKE PLATE, O.D 26 CM., I.D. 22 CM., SPOT WELDED TO CYLINDER WALL, THICKNESS 5 MM
11) CHOKE PLATE, O.D 25.5 CM., I.D. 10 CM., THICKNESS 1-1.5 MM. (SEE NOTE 2. BELOW)
12) AIR NOZZLES, 8 EQUALLY SPACED, I.D. 12 MM.
13) NUT, STAINLESS STEEL
14) TWO GAS EXITS, TUBING AT LEAST 30 MM. DIAM.
15) ASH BIN DOOR ASSEMBLY, RECTANGULAR HEIGHT 10 CM., 15 CM. WIDTH, 2 CM. FLANGES, THICKNESS 3 MM., BOLT DOOR ON WITH 6 EQUALLY SPACED BOLTS 8 MM
16) SHAFT, 25 MM. DIAM.
17) SUPPORT FOR GRATE, 4-45° RECTANGULAR CROSS SECTION (OR ROUND) 1 x 1 CM.
18) ECCENTRIC PLATES, 2 CM. SPACING, ECCENTRICITY 20 MM. AND 10 MM RESPECTIVELY, THICKNESS 5 MM.
19) COMMUNICATION FITTING (DETAILS SEE HALPP'S LETTER)
20) FOUR LEGS, USE BEAMS, 6 CM., 20 CM. LONG
21) GROUND SUPPORT PLATES, 8 x 8 x 1/2 CM.,
22) GRATE DRIVE SPROCKET

NOTES

1. THE GAS PRODUCER IS DIVIDED IN THREE DISTINCT PARTS:
A) BIN HOPPER BOLTED TO THE TOP FLANGE OF THE FIRE BOX (NEED TO SPOT WELD THE BOLTS FROM BELOW)
B) FIRE BOX, WHERE THE AIR INLET IS AN INTEGRAL PART OF THE FIRE BOX.
C) OUTLET CYLINDER WITH ASH BIN

2. IN CASE TO ADJUST THE LOCATION, PUT AN ADDITIONAL SUPPORT RING ON THE EXISTING ONE (PART 11)
CUT CHOKE PLATE IN HALF FOR EASY ASSEMBLE. (PART 11)

BIOMASS GASIFICATION SUBCOMPONENT (CHULALONGKORN UNIVERSITY)				
DESIGNED F. Kiwing			REFERENCE	25 KWe GASIFIER SYSTEM
DRAWN Mr. Kiwing W				
TRACED			CONCURRED	GAS PRODUCER
CHECKED Wongsawat A.	SUBMITTED			

Figure A13-1 - 25 kWe Gasifier (original desing)

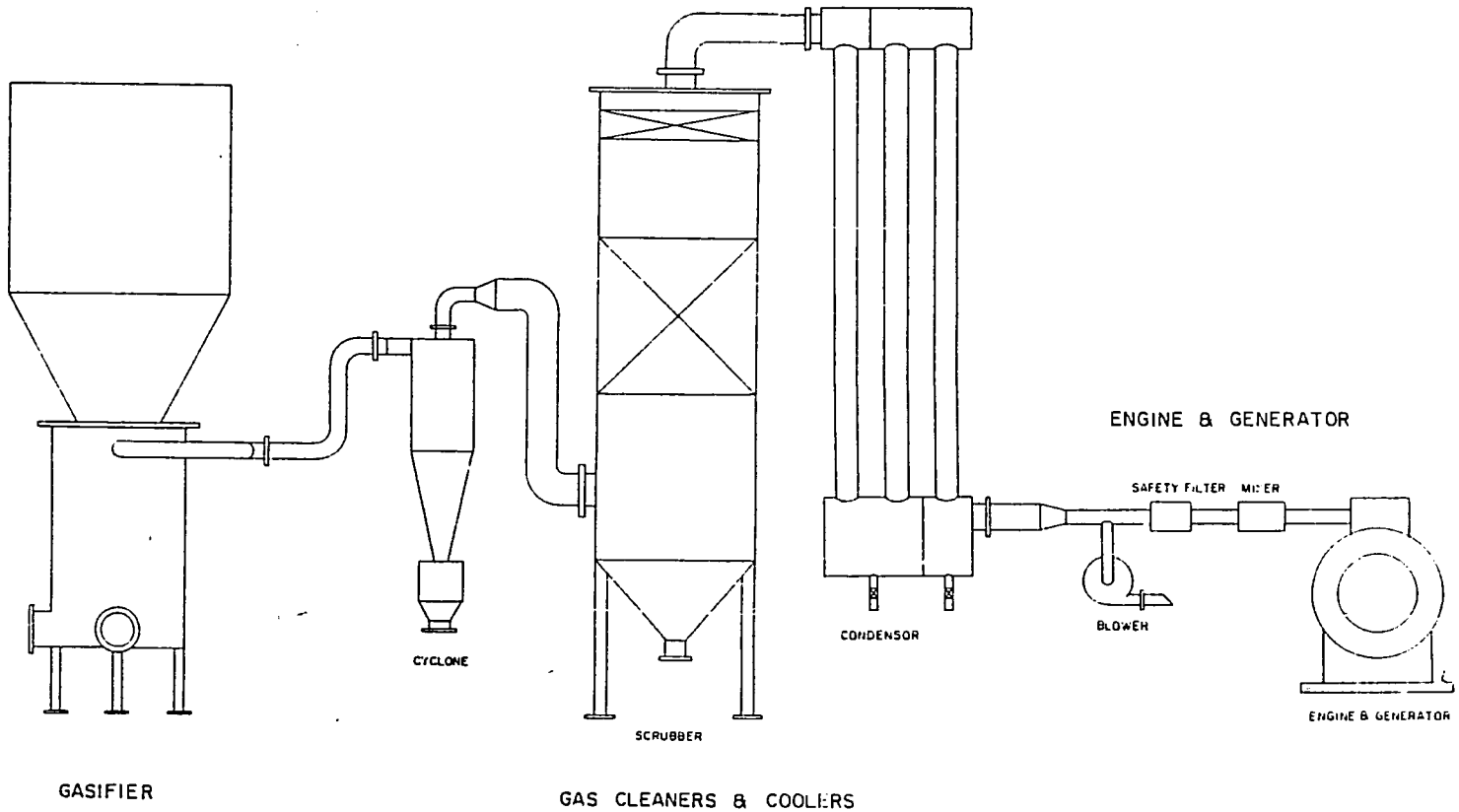

BIOMASS GASIFICATION SUBCOMPONENT (CHULALONGKORN UNIVERSITY)				
DESIGNED		RECOMMENDED	25 KWe GASIFIER SYSTEM	
DRAWN				
TRACED	SUBMITTED	CONCURRED	SYSTEM FLOW DIAGRAM	
CHECKED				
APPROVED	DATE		REPLACE	

Figure A13-2 - 25 kWe Gasifier (original design)

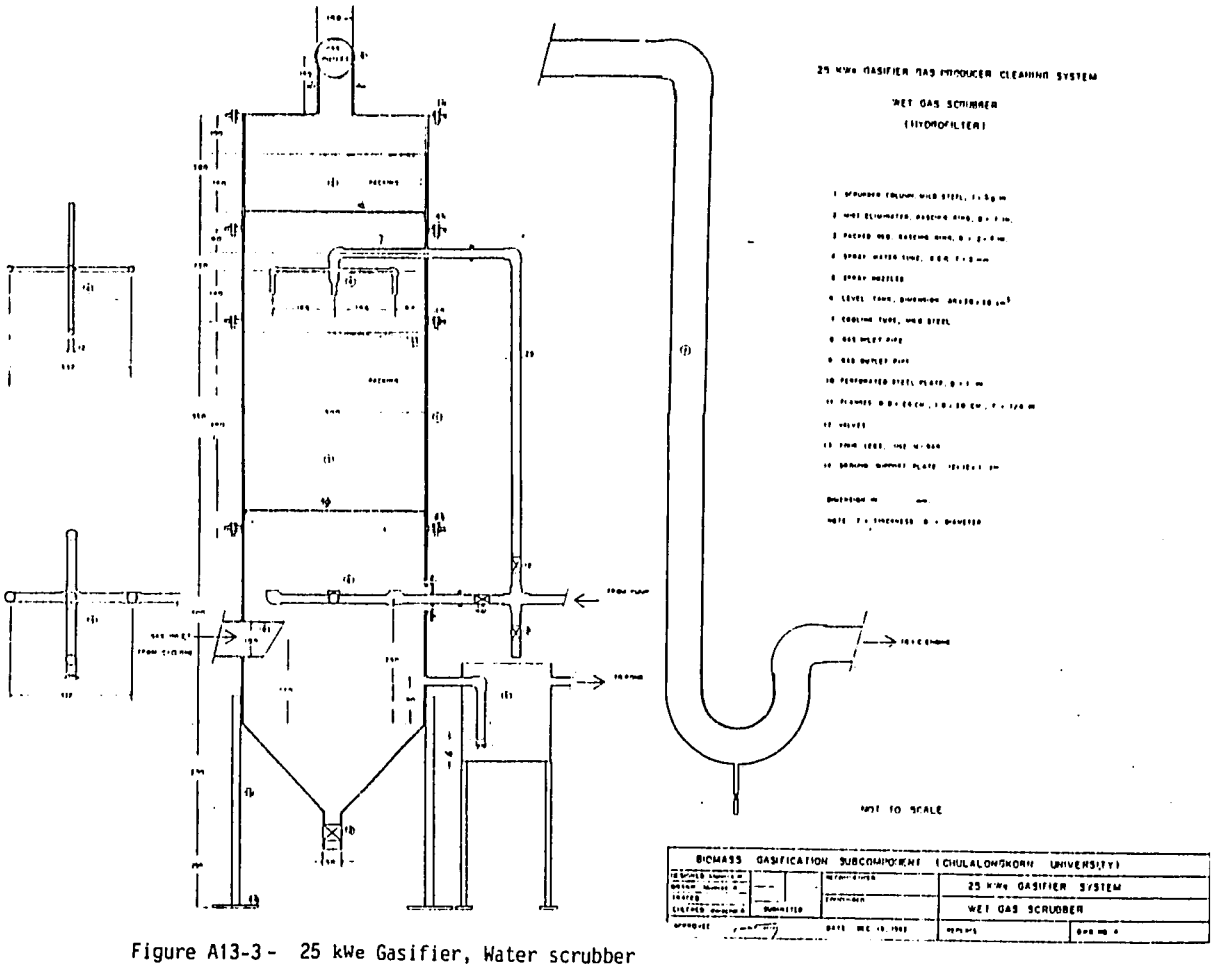

Figure A13-3 - 25 kWe Gasifier, Water scrubber

a

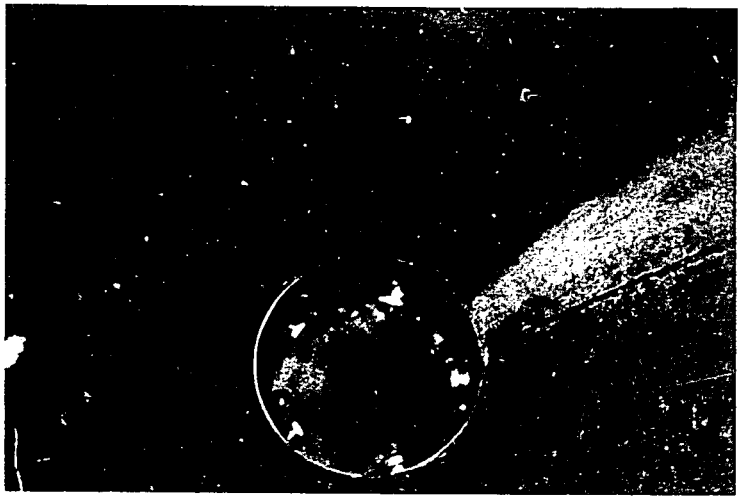

b

c

d

Figure A13-4 - a - The tuyeres, b - starting the gasifier
c - the entire system, d - starting the gasifier

a

b

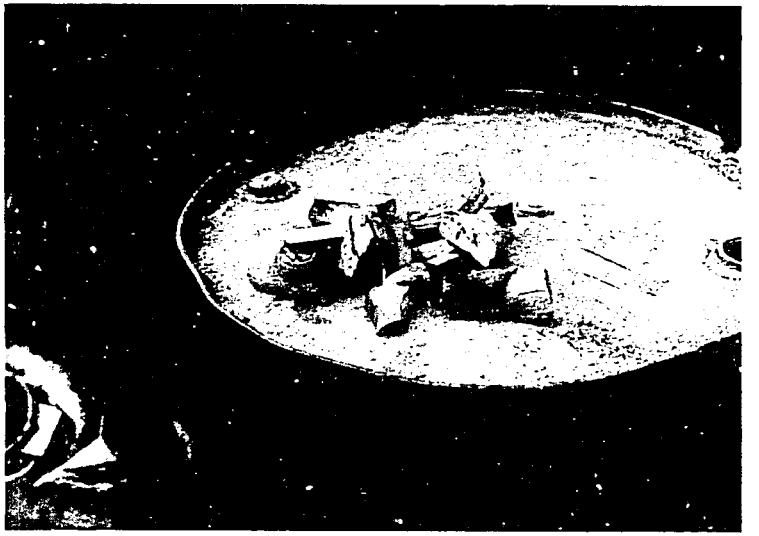

c

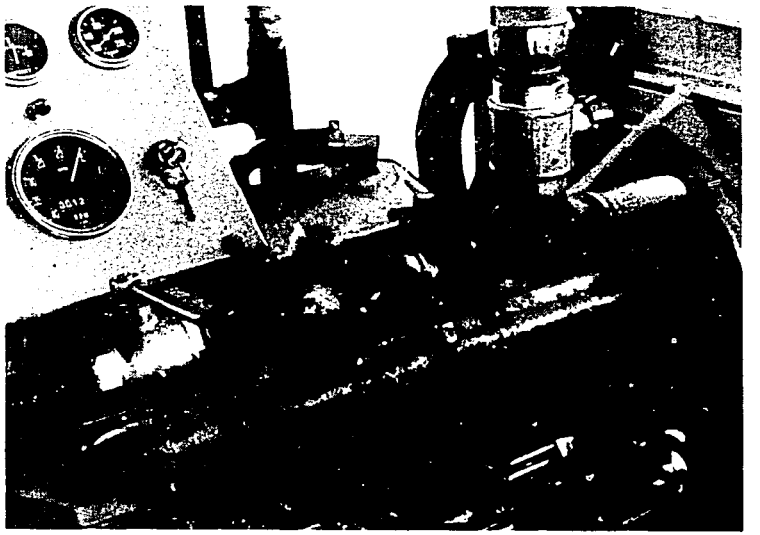

Figure A13-5 a, b, c, d, 25 kWe Gasifier : a - gas preheat system, b - wood chips tested
c - air mixing valve, d - gas valve control system

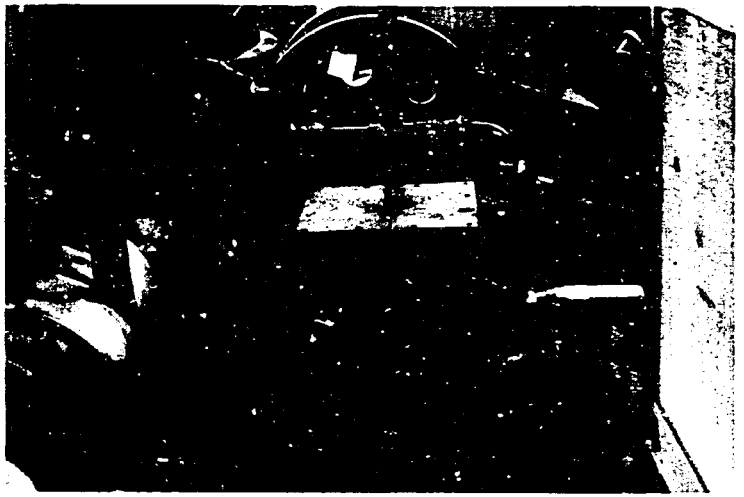

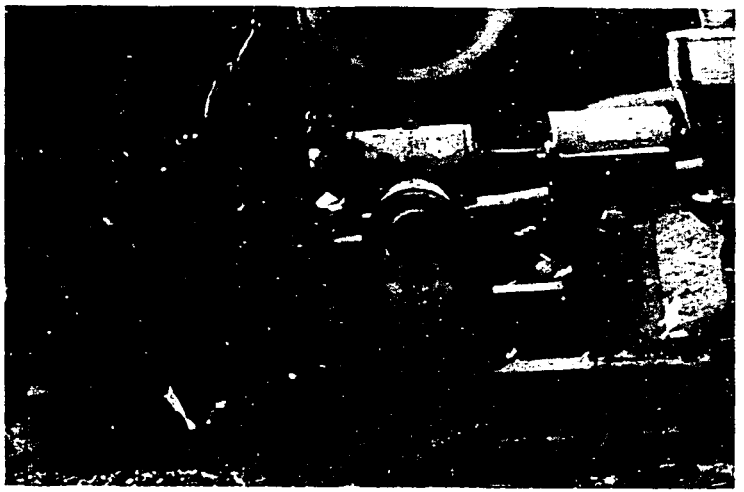

Figure A13-6 a, b, c, 25 kWe Gasifier

a - scrubbing water recirculation

b - starting-up the gasifier

c - the grate rotating mechanism

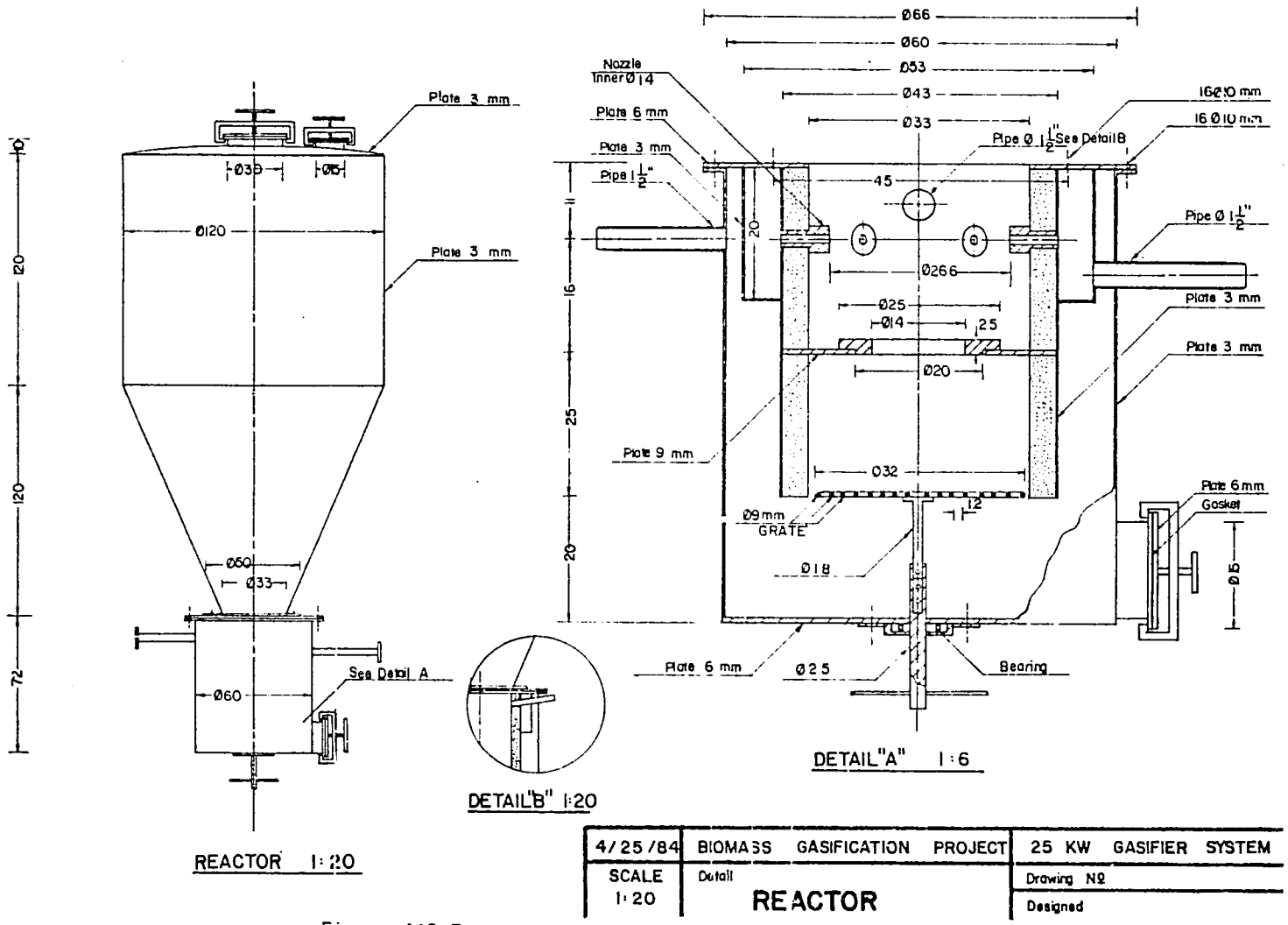

Figure A13-7 - 25 kWe Gasifier (final design)

Figure A13-8 - 25 kWe Gasifier (final design)

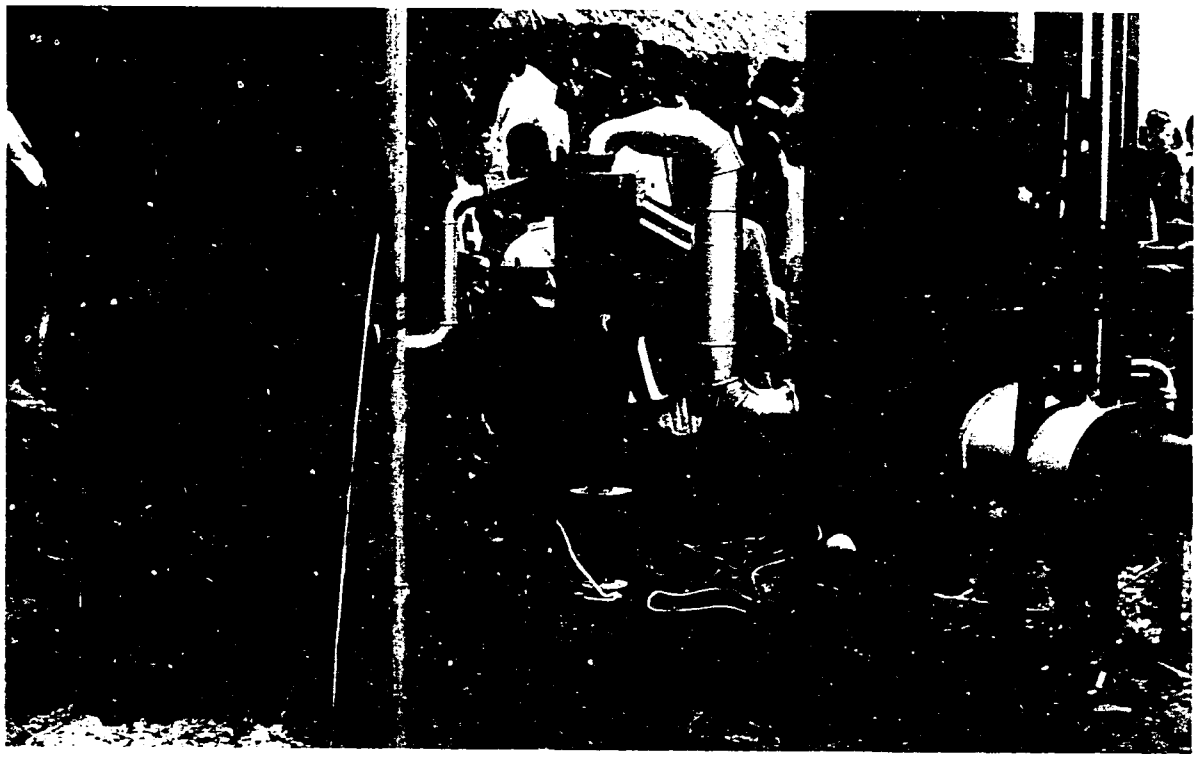

Figure A13-9 - 25 kWe Gasifier (final design)

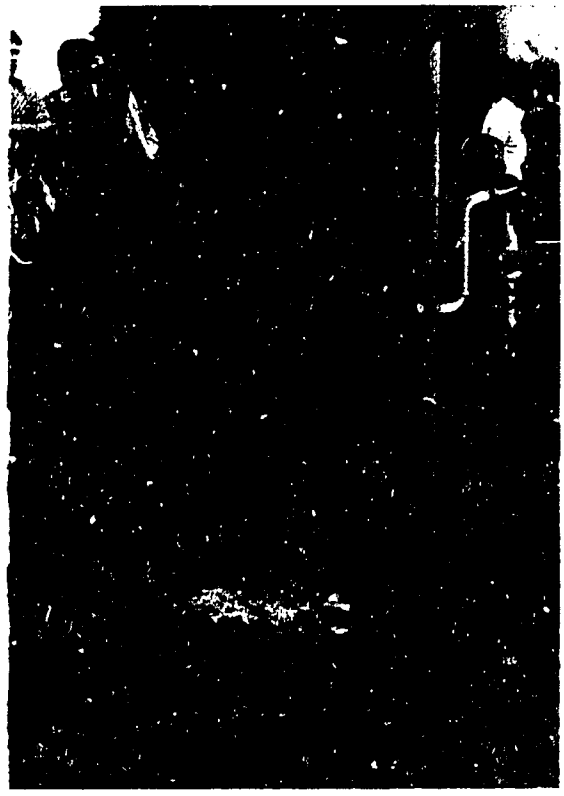

Figure A 10 - 25 kWe Gasifier (final design)

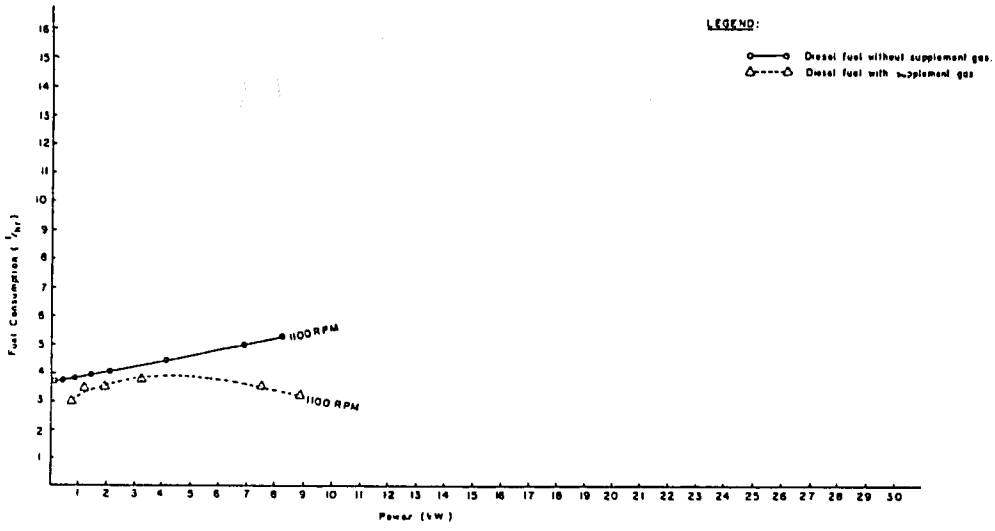

Figure A13-11 - Diesel engine test performance at constant speed

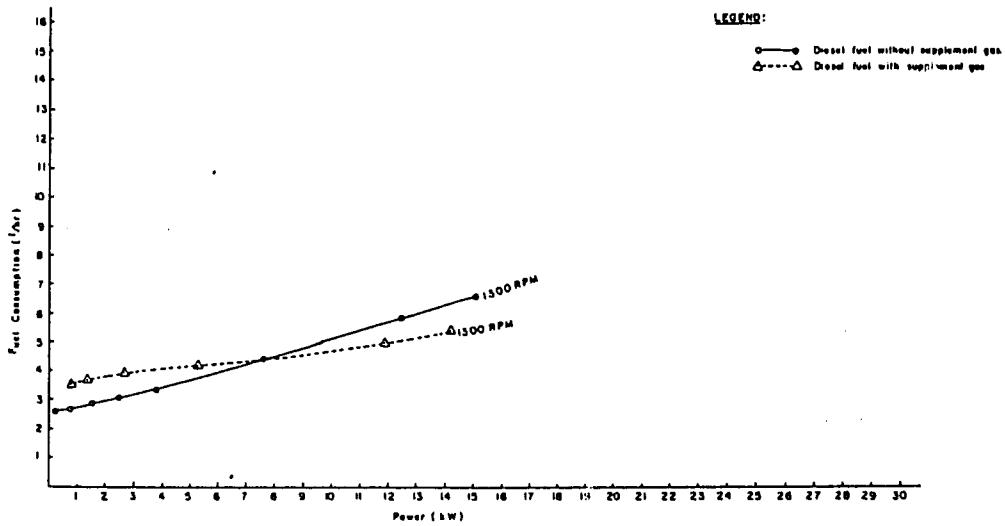

Figure A13-12 - Diesel engine test performance at constant speed

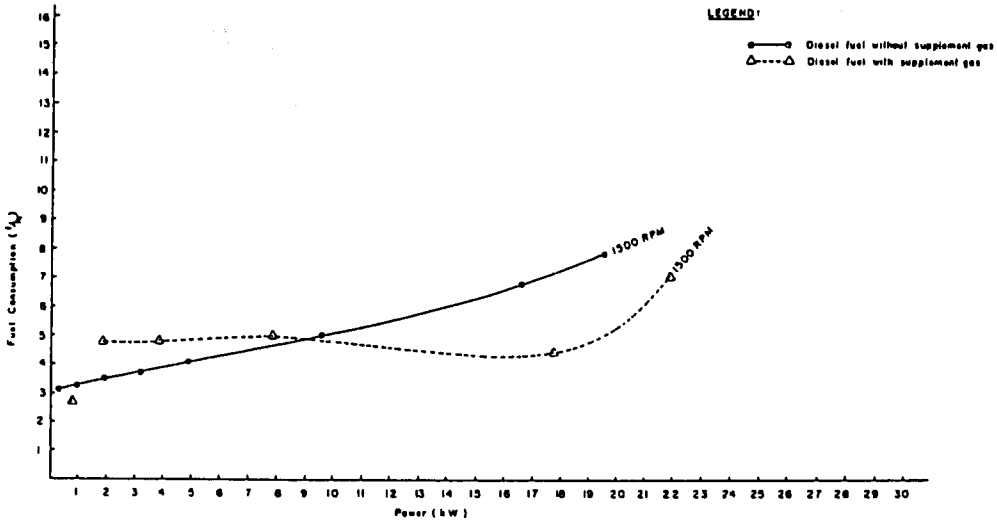

Figure A13-13 - Diesel engine test performance at constant speed

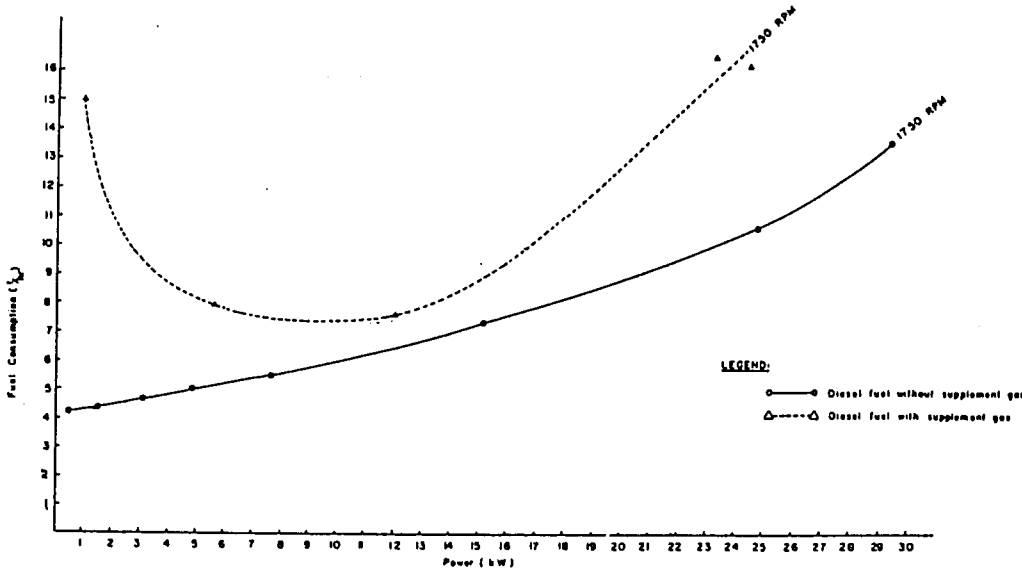

Figure A13-14 - Diesel engine test performance at constant speed

Previous Page Blank

ANNEX XIV

ANNEX 14

FLUIDIZED BED GASIFIER (UNIT NUMBER 1)

This direct fire fluidized bed gasifier was given to the Department of Chemical Technology, Chulalongkorn University, under the direction of Dr. Phol Sagetong to design, construct and test on behalf of the project.

A. INTRODUCTION

Gasification of carbonaceous materials in the presence of oxygen and heat has been widely studied for wood and crop residues such as rice hulls. The research has centered around the combustion phenomena to achieve solid fuel reaction in a most efficient manner. Most gasifiers studied in the past have been fixed beds of the updraft, crossdraft and downdraft type. There has been a past history of use of such systems but the utilization of such units has not been permanent for various technological, economic and social reasons. This study is eventually aimed at solving problems of gasification of biomass for large-scale operation; this particular work is aimed at developing a pilot scale gasifier that will be scale 2 up in the future. The design of the gasifier will be based on the well established fluidized bed technique. One of the solid fuels which is gasified with difficulty in fixed bed designs is believed to be readily gasified in such fluidized beds. Rice hulls is a crop residue obtained in large volumes in Thailand and is found in large quantities around rice mills. It is also easily handled. The main problem with rice hulls is the high percentage of SiO; in a combustor this silica may fuse into a solid mass impeding the flow of fuel through fixed bed gasifiers. Therefore this particular study decided to use rice hulls as fuel in the fluidized bed gasifier.

B. OBJECTIVES

The objectives of this study was to answer two basic questions. Does the principle of fluidization work on gasification of crop residues? Can a relatively trouble-free fluidized bed system be built in Thailand?

C. CONSTRUCTION OF THE FLUIDIZED BED

The fluidized bed unit designed consists of two fluidized bed columns. The first column will be a combustor to heat air to be used in the second column which is the gasifier. Both units will use rice husk as fuel, using an automatic feeding machine. Both columns will be controlled through temperature measurements in the beds and control of the raw material feeding systems.

The fluidized bed gasifier is shown in Figure A14-1, A14-2 and A14-3. Figure A14-1 shows the details of the combustion column (No.6). This unit burns rice husk which contains unreacted carbon from the gasifier and if need be, fresh rice husk may be fed in to increase the temperature as desired. Air from the air compressor will enter at the bottom of the combustion column. The hot gases from the combustion column including unreacted carbon and ash as particulates will exit at the top of the column and pass through a cyclone (No. 11) to separate particulates and ash from

the hot gases. The hot gases will pass through the distributor of the gasifier column (No.13) and will gasify fresh rice husk fed into the gasifier through a feeding system (No.14). The gases obtained will exit at the top of the upper column and will pass through another cyclone (No.15) that will remove fine particles from the produced gas and return to feeding system. The ash from the gasifier which contain unreacted carbon will be transported to the feeding system of the combustion column for further combustion. There is a temperature recording device in both columns. The temperature recorder and feeding systems are synchronized so as to maintain desired temperatures inside the column. There is an insulator which covers all hot parts of the fluidized bed.

Figure A14-2 shows details of the combustion unit. The column is a stainless steel tube No.304 3 mm thick 150 mm ID. The distributor is fixed to the column through a flange that can be removed. A perforated plate is used as a support for the rice husk and as distributor of air into the bed. The raw material feeding system is placed above the perforated plate. Above this feed point a thermocouple port hole is placed into the bed. At the top of the column the hot gases and the ash will exit the column to enter the cyclone. At the distributor we have a nozzle to aid in the initial combustion.

Figure A14-3 shows the details of the gasifier bed which are very similar to the combustion bed. The details are as follows: At the top of the column is a stainless steel tube No.304 3 mm thick of 150 mm ID. The distributor is different from the combustor in that the air enters on the sides of the distributor. A device at the bottom of the distributor is used for removing incompletely converted carbon from the combustion column. Ash removal is done with a srew conveyor system which can be controlled. The raw material feeding port enters the side of the gasifier column. Above the raw material feeding port a thermocouple port was installed to record inside temperatures. At the top of the column, the gases enter the cyclone to separate fine particles from produced gases.

D. RESULTS OBTAINED

The gasification of rice husk was said to be successful although data of gas concentrations was not available at the time of the preparation of the final report (August 1984).

The data of percentage conversion of carbon in the combustion chamber was 90%. The data for conversion of carbon in the gasification chamber was 40%.

The feed rate of rice husk for the combustion zone and the gasification zone was 3-4 kg/h and 4-5 kg/h respectively.

E. CONCLUSIONS AND DISCUSSIONS

- The major conclusion to be made is that this fluidized bed gasifier design was able to gasify rice husk. The optimal gasification point, however, was not reached, leaving room for improvement.

- A series of tests will have to be conducted in the near future to optimize this system before an implementation program may be undertaken

based on this unit.

- A dissemination program cannot be made at this stage as a successful implementation program must first be achieved.

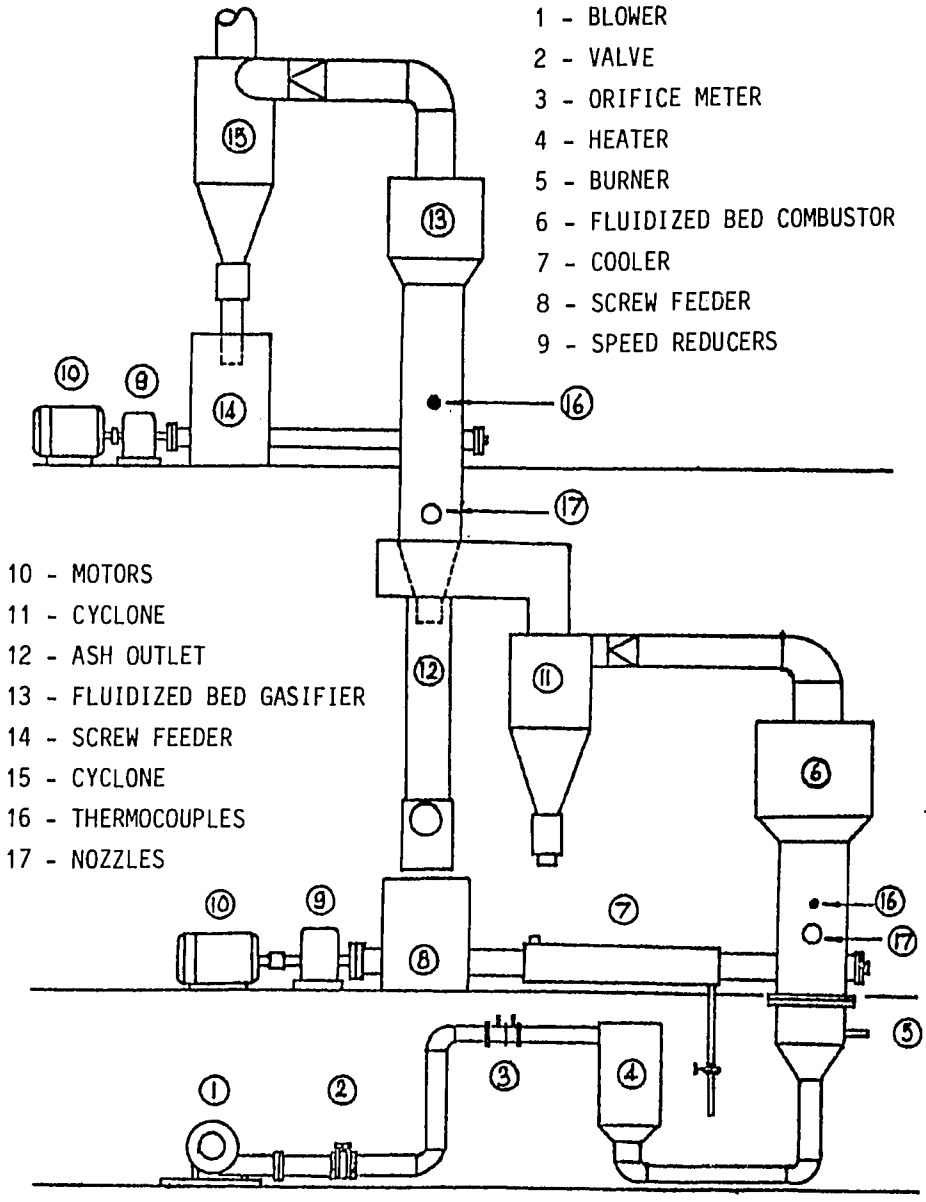

Figure A14-1 - Fluidized Bed Gasifier (Unit Number 1)

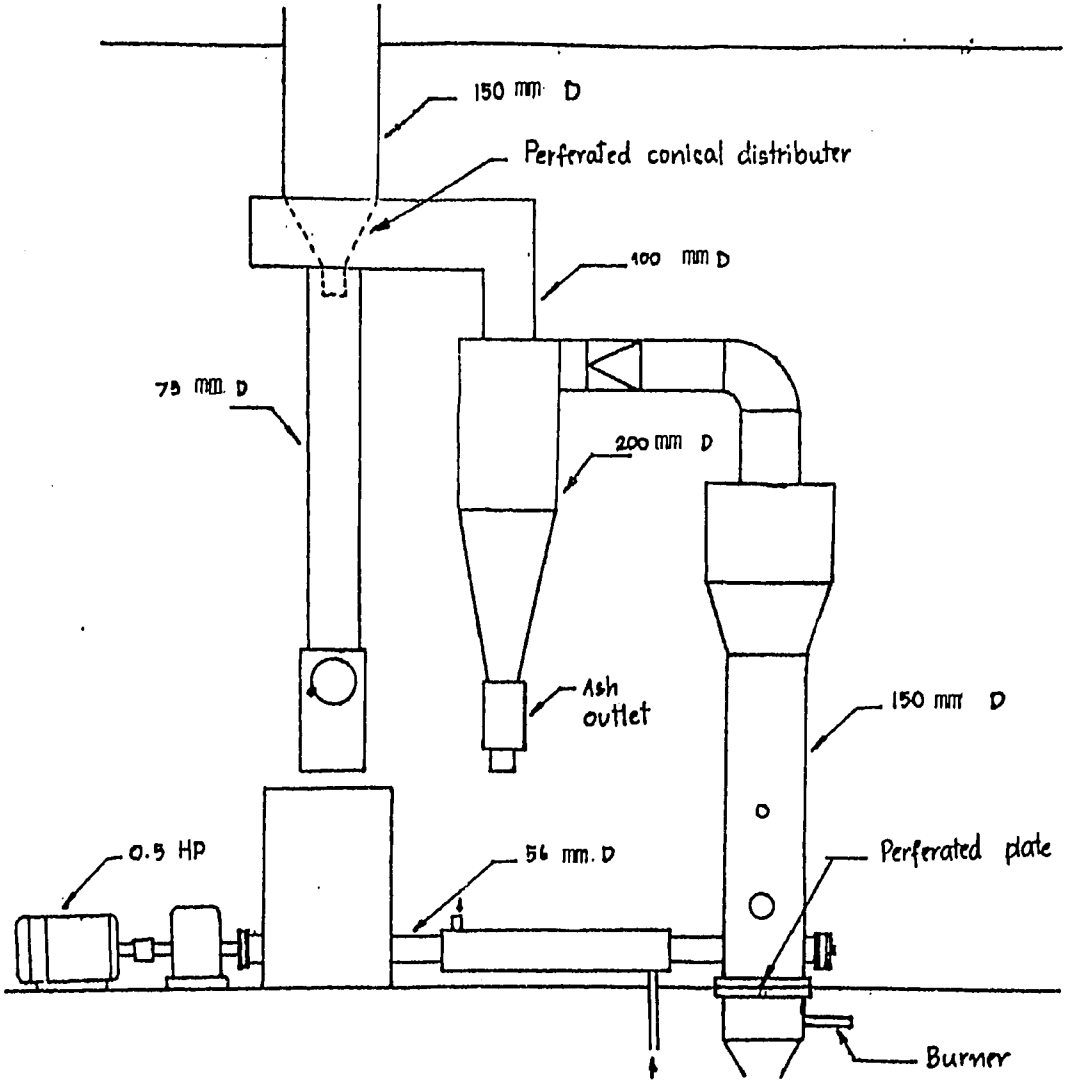

Figure A14-2 - Fluidized Bed Gasifier (Unit Number 1), Combustor Unit.

Previous Page Blank

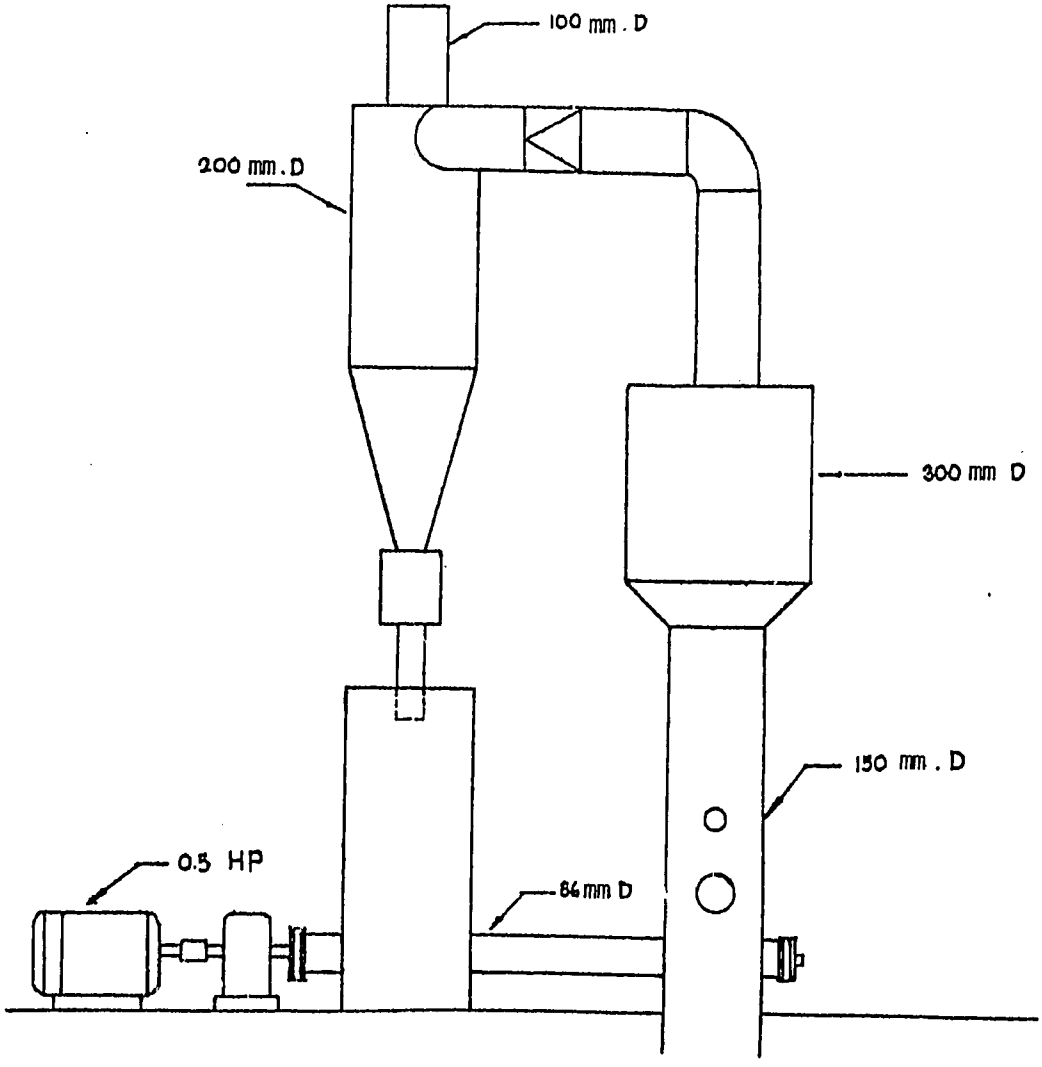

Figure A14-3 - Fluidized Bed Gasifier (Unit Number 1)
Gasifier Unit

Figure A14-4 - Views of the Fluidized Bed Gasifier (Unit Number 1), during contruction.

ANNEX XV

Previous Page Blank

Previous Page Blank

ANNEX 15

FLUIDIZED BED GASIFIER (UNIT NUMBER 2)

This fluidized bed gasifier was given to the Department of Mechanical Engineering, Chiang Mai University, under the direction of Dr. Norkun Sitthipong to design, construct and test on behalf of the project.

FLUIDIZED BED GASIFICATION OF AGRICULTURAL WASTES FOR RURAL COMMUNITIES IN THAILAND

A. INTRODUCTION

Background

The energy problems that rural agricultural sectors are facing come from high costs of gasoline, diesel oil, and availability and cost of electricity. The solution lies in research and development of new technologies in order to substitute with other sources of energy available in rural areas for petroleum products.

In rural Thailand, agricultural wastes or crop residues, i.e., rice husk, rice straw, cassava plant, bagasse, bean husk and corn stalk are mostly unused and simply burned in the fields. Amyot (1983) indicated that the total rice cultivation area for the whole kingdom in 1980 was 56 million rais (9 million ha.) and the average yield per rai was 608 kg. This brought the total production yield of paddy up to 34 million tons. Beagle (1978) indicated that rice husks are the largest milling by-product of rice, constituting one-fifth of the paddy by weight. With current annual rice production, about 10 million tons of rice husks are produced each year. Traditionally, one of the major uses of husks was as fuel to provide energy for large-scale rice-mill operation.However, most of the small rice-mills make use of either gasoline or diesel engines. The capacity of these rice-mills can vary from 100 kg/hr to 1000 kg/hr of paddy. The power requirements can also vary considerably from 3 kW to 18 kW. The value of such rice husks produced from these local mills is usually low.Rice husks can be converted into energy through a variety of methods, i.e., combustion, destructive distillation, pyrolysis and gasification. Only the gasification method will be discussed in this report.If rice husk is burned in a controlled environment with a limited supply of air, it will give rise to a mixture of gases, known as producer gas, consisting mainly of carbon monoxide and hydrogen (which are combustible),and carbon dioxide and nitrogen (which are non-combustible). The producer gas can be used in either shaft-power systems or direct-heat systems. Shaft-power systems include spark-ignition engines, compression-ignition engines, and Stirling engines. Only the spark-ignition system will be discussed in detail in this report since this system can be totally operated using producer gas.Gasifiers can be classified according to the direction of gas flow into three types, i.e., up-draught, down-draught and cross-draught gasifiers.In additions, the gasifier can be classified according to the state of fuel in the bed into two types, i.e. fixed-bed and fluidized-bed gasifiers.At present, the fixed-bed gasifiers are successfully being operated using either charcoal or wood as fuel and are again becoming commercially available. Gasification of other biomass,

especially rice husk is considered to be extremely difficult because of its low density, poor flow characteristics, high ash content, and low melting point of ash. These serious problems can be effectively solved by using a technique known as fluidized bed gasification which will be discussed in detail in this report.

Objectives

One of the objectives of this report is to develop, construct and test a fluidized bed gasifier using either rice husk or sawdust as fuel. The size of the fluidized bed gasifier was to be appropriate for a village-size application. The aim was to generate producer gas which could be adequately used as fuel for an internal combustion engine. A spark ignition engine was to be used as prime mover for electricity generation.The gasifier, prime mover,and generator was to be used in a stationary application. The generator set was to be large enough to electrify a village of average size (100 households). During the day the system was to be suitable for other applications in rural communities, i.e., water pumping for irrigation, power for small rice mills and small farm machineries.

B. FLUIDIZED BED GASIFICATION

Behavior of Fluidized Beds

Considering a bed of fuel particles such as in Figure A15-1, if the upward flow of gas through the bed is low, the bed height remain unchanged and the bed is known as a fixed bed. However, if the upward velocity is sufficiently high, the fuel particles in the bed will be freely supported in the gas to give rise to a fluidized bed. At that moment, the state of the fuel particles is changed from a fixed state to a fluidized state. The bed will expand so that the average distance between the fuel particles will become greater, and the excess gas will pass through the bed in the form of bubbles.

Thus, a fluidized bed can be formed by increasing the upward flow velocity through a fixed bed. The velocity that marks the transition from the fixed state to the fluidized state is known as the fluidizing velocity at minimum conditions (U_{mf}) which is a function of the densities of solid particles (ρ_s) and upflow gas (ρ_g), the size of the solid particles (ρ_g) and the viscosity of the upflow gas (μ_g). Kunii and Levenspiel (3) stated that the superficial gas velocity at minimum fluidizing conditions could be obtained from,

$$U_{mf} = d_p^2 (\rho_s - \rho_g)g/1650\mu \qquad \text{for small particles} \quad (1)$$

$$U_{mf} = d_p^2 (\rho_s - \rho_g)g/24.5\mu \qquad \text{for large particles} \quad (2)$$

The fluidized bed is known to have several advantages in particular mixing of solid particles, rapid heat and mass transfer between solids and upflow gas. Hence, fluidized beds are widely used as chemical reactors and heat exchangers, especially when a precise temperature is required.

The other behavior of the fluidized bed that has to be mentioned is the pressure drop across the bed. If the upflow gas velocity is increased,

the pressure drop across the bed will rise significantly. When the gas velocity has reached the fluidizing velocity at minimum conditions, the pressure drop will be equal to the buoyant weight per unit area of the solid particles. Any further increase in gas velocity will result in expansion of the bed but the pressure drop will remain constant. Since the pressure drop across the bed is rather high, more power is required and occasionally power consumption can be so high that it may cancel the advantages that have been mentioned.

Gasification

Producer gas can be obtained from the incomplete combustion of carbon to carbon monoxide and the reduction process of carbon dioxide and water vapor to carbon monoxide and hydrogen. The main reactions of the conversion processes are:

1. The Combustion or Oxidation Process: The carbon in the solid particles is burned with oxygen in the air forming carbon dioxide.

$$C + O_2 \qquad CO_2 \qquad (3)$$

2. The Reduction Process: The carbon dioxide reacts with excess carbon in the solid particles to form carbon monoxide.

$$C + CO_2 \qquad 2CO \qquad (4)$$

3. The Shift Process: The water vapour in the air also reacts with excess carbon to form carbon monoxide and hydrogen.

$$C + H_2O \qquad CO + H_2 \qquad (5)$$

Fluidized Bed Gasification

Consider a schematic diagram of the fluidized bed gasification system designed in this work in Figure A15-2. The system includes a reactor made up of stainless steel, a flat perforated plate used as ca gas distributor, a solid fuel screw feeder, a forcedraft fan and a cyclone for fine ash removal.

The reactor is loaded with silica sand and the bed is heated by an external fuel source until a sufficiently high temperature is reached. The solid fuel which must be in the form of small solid particles is introduced into the bed by a screw feeder system. Air is blown-upward through the bed at a suitable velocity to keep the bed fluidized. Reactions (3), (4) and (5) take place in the reactor and the products leave the bed through the cyclone where fine ash is removed by centrifugal effect. Coarse ash and part of the unburnt solid fuel are drained from the bed through an overflow port.

The amount of air that flows upward through the bed must be less than the amount of air required for complete combustion of the solid fuel in the bed. The temperature inside the bed can be controlled by the amount of upflow air and the amount of solid fuel intake. The composition of the

producer gas is mainly carbon monoxide, carbon dioxide, hydrogen and nitrogen. The variation of the composition depends on several factors, i.e., bed temperature, bed height, superficial velocity, solid fuel feed rate, and the composition of the solid fuel.

In order to maximize the amount of carbon monoxide in the producer gas, an additional stage of fluidized bed was eventually considered. Consider a schematic diagram of a two-stage fluidized bed gasification in Figure 3. An identical reactor with the same size was connected on top of the first stage. The upper stage of the fluidized bed was designed to be the reduction zone where reactions (4) and (5) would take place. The hot gas from the first stage flowing upward was designed to heat the bed material in the second stage up to the required temperature. Solid fuel in the form of small solid particles was fed into the bed by a screw feeder system and carbon dioxide from the first stage was reduced to carbon monoxide.

C. THE DESIGN WORK

One of the basic needs for a village in rural areas is electricity for lighting. Consider an average village size of 100 households. If the basic requirements for each household is two light bulbs, 50 W each, a 10 kW generator set will be sufficient.

The system will consist of a fluidized bed gasifier, a gasoline or spark ignition engine, and an electric generator. Usually, the typical efficiencies for the generator and the gasoline engine are 90% and 25% respectively. For the fluidized bed gasifier, the efficiency is defined as,

$$\eta_G = \dot{m}_g c_g / \dot{m}_s c_s \qquad (6)$$

where $\dot{m}_g$ and $\dot{m}_s$ are the mass flow rate of the producer gas and the solid fuel respectively, c_g and c_s are the heating values of the producer gas and the solid fuel respectively. For a conservative approximation, a value of 60% is assumed for the fluidized bed gasifier efficiency. Thus, the total efficiency of the whole system is 13.5%.

The minimum power required as input to the gasifier which is the product of $\dot{m}_s$ and $\dot{c}_s$ 74 kW. If the heating value of rice husk is 12.5 MJ/kg (2), the mass flow rate of the rice husk for the system will be 0.006 kg/s or 22 kg/hr. The system will be operated 4 hours daily from 6 to 10 P.M. Thus a total amount of 32,120 kg. of rice husk will be required annually. Based on the data that rice husk constitutes one-fifth of paddy by weight, the total production yield of rice per village must be 160,600 kg. If the production yield of rice per rai is 600 kg/rai, the area required for planting rice will be 268 rai or 2.68 rai per household which is reasonable for a typical village.

The Spark Ignition Engine

In order to determine the appropriate size of the spark ignition engine which will be fitted to the gasifier and the generator, several data on producer gas and engine performance must be known first.

Table 15.1 provides basic data on gas composition and caloric values of rice husk and sawdust (2). If the efficiency of the engine is 25% and the required power output is 11.11 kW, the power input from the producer gas must be 44.44 kW. The caloric value of the producer gas must be 8.85×10^{-3} m^3/s. If the gas density at room temperature is 1.05 kg/m^3, the mass flow rate of the producer gas must be 9.29×10^{-3} kg/s or 0.557 kg/min.

From the data on gas composition, it can be seen that most of the combustible gas which is CO is about 32.2% and the non-combustible gas which consists of CO_2 and N_2 is about 60%. The combustion processes that will occur inside the combustion chamber of the engine are as follows:

$$2\ CO + O_2 \qquad CO_2 \qquad (7)$$

$$2\ H_2 + O_2 \qquad H_2O \qquad (8)$$

$$CH_4 + O_2 \qquad CO_2 + 2H_2O \qquad (9)$$

The amount of CO in the producer gas is 32%. Thus the mass flow rate of CO is 0.178 kg/min and using equation (7), 0.102 kg/min of O_2 must be required for complete combustion. The percentage of O_2 in standard air is 23%, thus the mass flow rate of air is 0.440 kg/min or 0.367 m^3/min. This indicates the total mass flow rate of the gas mixture(producer gas and O_2) must be 1.0 kg/min or 0.90 m^3/min.

Table 15.1 Gas composition and caloric values of rice husk and sawdust.

Fuel Data	Rice-husk	Sawdust
Caloric value (MJ/kg, dry)	14.70	14.73
Fixed carbon (%)	17.4	20.67
Moisture (%)	-	-
Volatiles (%)	60.9	78.4
Ash (%)	21.7	0.93
kg/kW (dry)	1.34	1.34
kg/kW (29% moisture)	1.70	1.70
CO (%)	3.0	12.2
O (%)	0.4	0.8
CO (%)	32.2	18.2
H (%)	6.4	10.2
CH (%)	0.6	3.2
N (%)	57.1	55.4
Caloric value (MJ/m^3)	5.02	4.57
Gas yield (m^3/kg, dry)	1.87	2.05
Gas Yield (m^3/kg, 20% moisture)	1.49	1.62

Results from many investigators indicated that an engine running on producer gas should have a relatively slow speed and the engine speed of around 1500 rpm is widely regarded as being the optimum engine speed. Thus, the suitable displacement volume of the combustion chamber for a four-stroke S.I. engine is 1200 c c.

The Fluidized Bed Gasifier

In order to generate a sufficient flow rate of producer gas for the S.I. engine, the mass flow rate of air and solid fuel required for the fluidized bed must be known. The mass flow rate of air can be stated in term of superficial gas velocity through the fluidized bed.

The Superficial Gas Velocity

By using the data of producer gas composition from Table 1 and the mass flow rate of producer gas which is 9.29×10^{-3} kg/s, the mass flow rate of air required for the fluidized bed will be 8.24×10^{-3} kg/s. Usually, the acceptable superficial gas velocity through the fluidized bed can be varied between 1 U_{mf} and 5 U_{mf}.

The superficial gas velocity at the minimum fluidizing condition (U_{mf}) can be calculated from equation (1).If the surface mean particle size (d_p) of the bed particle (silica sand) is 1 mm, the density of the bed particle is 2000 kg/m^3, the gas density at 800 °C is 0.329 kg/m^3 and the viscosity of gas (μ) at 800 °C is 60×10^{-6} kg/ms, the superficial gas velocity at the minimum fluidizing condition will be 0.20 m/s.

If a cylindrical fluidized bed having an internal diameter of 0.20 m (8 inches) is chosen, the superficial gas velocity (U) through the fluidized bed will be

$$U = \dot{m}/\rho A \qquad (10)$$

where the mass flow rate ($\dot{m}$) of air is 8.24×10^{-3} kg/s, the gas density at 800 °C is 0.329 kg/m^3 and the cross-sectional area (A) is 0.031 m^2. Thus the superficial gas velocity from the calculation is 0.807 m/s which is about 4 times that of the U_{mf}.

In the case of sawdust, the mass flow rate of the producer gas is 10.2×10^{-3} kg/s. Thus, the mass flow rate of air required for the fluidized bed must be 8.47×10^{-3} kg/s and the superficial gas velocity is 0.830 m/s which is also about 4 times the U_{mf}.

Pressure Drop in the Fluidized Bed

In order to determine the pressure drop across the fluidized bed (ΔP), the following equation will be used,

$$\Delta P = W/A \qquad (11)$$

where ΔP is the pressure drop across the fluidized bed, W is the weight of the bed particle which is equal to 184.3 N, and A is the cross sectional area of the 0.20 m diameter bed (0.031 m^2). Thus, the pressure drop from equation (11) will be 5.95 kPa.

Design of the Gas Distributor

Fluidized beds may operate in two modes: a particulate bed or bubbling bed. The Froude number at minimum fluidizing conditions defined as

$$Fr_{mf} = U_{mf}/d_p g \qquad (12)$$

will be used. If the Froude number is less than 0.13, the mode of the fluidized bed will be the particulate or smooth bed. On the contrary, if the Froude number is greater than 0.13, the mode of the fluidized bed will be the bubbling or aggregative bed.

From the calculations, a value of 4.08 for the Froude number was obtained. Thus, the mode of the designed fluidized bed is a bubbling bed.

When the fluidized bed is in the bubbling mode, the quality of bubbling fluidization is highly influenced by the type of gas distributor. The gas distributor should have a sufficient pressure drop to achieve equal flow through the opening. Kunii and Levenspiel (1969) concluded that the suitable pressure drop across the gas distributor should have a maximum value of either 10% of ΔP_{bed} or 0.35 m of water. From the previous section, the pressure drop across the bed is 5.95 kPa; thus, the suitable pressure drop across the gas distributor (ΔP_d) should be 0.35 m of water or 3.43 kPa.

In order to determine the number and size of the openings, the gas flow through an orifice theory will be used. The velocity of fluid through the orifices can be obtained from

$$U_{or} = c_d \ (2\Delta P_d/\rho_g)^{0.5} \qquad (13)$$

where c_d is the orifice coefficient which is a function of the Reynolds number and can be obtained experimentally. In this calculation, the value of 0.70 is assumed for the orifice coefficient. Thus, the gas velocity through the orifices is 100 m/s.

The number and size of orifices can be found from

$$A_{or} N \ U_{or} = AU \qquad (14)$$

If the diameter of orifices is chosen to be 1 m, then the numbers of orifices in the gas distributor will 87. The gas distributor is made of a single perforated steel plate of 3 mm thickness.

Solid Fuel Feeding System

By using the data of solid fuel composition from Table 1 and the required mass flow rate of producer gas, the mass flow rate of the solid fuel can be calculated. When rice husk with 17.4% of fixed carbon is used as fuel, the amount of rice husk required to be fed to the fluidized bed will be 7.80×10^{-3} kg/s. In the case of sawdust with 20.7% fixed carbon, a feed rate of 5.49×10^{-3} kg/s is required.

There are several feeding systems that are used in practice in small

scale fluidized beds. In this study, a screw-feeder which is considered simple, low cost and effective is used. It consists of a 2.54 cm in diameter solid shaft with screw blades of 7.62 cm outside diameter and a pitch of 3.8 cm.

The rotation speed in rpm of the screw-feeder can be calculated from

$$ms / \rho_s = (\pi/4)(d_1^2 - d_2^2)(\text{pitch})(\text{rpm})$$

where d and d are the outside and inside diameters of the screw blade (7.62 cm and 2.54 cm respectively). When rice husk with an average bulk density of 112 kg/m is used, the rotation speed of the screw feeder must be 27 rpm.

The screw-feeder is driven by a 0.373 kW (0.5 hp) induction motor with a rotation speed of 1450 rpm. The rotation speed of the screw feeder is reduced from the motor speed by using a 50:1 reduction gear box and a belt-pulley system.

Gas Cleaning and Cooling Systems

Producer gas for an internal combustion engine must be free of tar, dust particles and excessive water vapor. Also, the temperature of the producers gas must be as close to the ambient temperature as possible.

Dust particles and fine ash can be removed from producer gas by passing the hot gas from the gasifier through a cyclone. The cyclone is made of a wrapped metal sheet forming a cylindrical container of 0.20 m. in diameter and 0.80 m. in length.

After leaving the cyclone, the hot gas must be further cooled and cleaned by passing the hot gas through an array of vertical pipes. The natural free convection of air around the vertical pipes will provide sufficient cooling for the tube array. The tube array consists of eight vertical pipes of 3.8 cm. in diameter placed parallel and 20 cm apart.

Two drain plugs were installed at the bottom of the tube array for the removal of condensed water and tar. Water vapor and tar will condense in the cooling system when the gas is cooled to dew-point temperature.

Before the gas enters the combustion chambers, it must be mixed with ambient air by using two regulated ball valves. Finally, the mixture of producer gas and air must be passed through a fabric filter which is a typical internal combustion engine dust filter.

D. EXPERIMENTAL WORK

In order to generate a producer gas adequate for a given application (in this case an internal combustion engine which will be used as prime mover for a 10 kWe electricity generator set), data on solid fuel feed rate, air flow rate and producer gas concentration must be obtained first.

The test work was performed at the Automotive Building, Faculty of Engineering, Chiang Mai University on a 20 cm fluidized bed gasifier as

shown in the attached blueprint.

Experimental Facilities

The experimental facility of the bench-scale fluidized bed gasifier is shown schematically in Figure 3. The fluidized bed is a 20 cm diameter, refractory-lined, cylindrical vessel. The height of the lower stage is 100 cm. The gas distributor of the lower stage is a single plate with 64 perforations of 0.10 cm diameter in a square arrangement. The height of the upper stage is also 100 cm. The gas distributor of the upper stage is a single plate with 64 perforations of 0.40 cm diameter in a square arrangement.

A screw feeder was used for accurate solid feeding. The feed rate of the lower and the upper stage was set at 3.67×10^{-3} and 3.07×10^{-3} kg/s respectively. However, an adjustment of the feed rate can be easily performed by changing the ratio of the pulley system.

Fluidizing air was supplied to the fluidized bed by a single stage air compressor which was able to deliver the maximum flow rate at an initial condition of 40 m^3/hr. The actual flow rate of supplied air was measured by a calibrated B.S. orifice plate and an inclined manometer.

The composition of the producer gas was determined by an orsat gas analyzer which was able to measure the concentration of CO_2 , O_2 , CO. Producer gas after passing through the cyclone and cooling pipes was drawn from the system and kept in a glass cylinder by water replacement.

The experimental study was divided into three series of tests. The first series of tests were for the lower stage only which were accomplished by removing the gas distributor of the upper stage. The purpose of this study is to determine the concentrations of the producer gas at different gas velocities in a single stage fluidized bed.

The second series of tests were for both stages. Solid fuel was fed into both the lower and upper stages. Also, the concentrations of the producer gas at different gas velocities were measured for comparison with the data from the first series of tests.

Using the results from the second series, the last series of tests were conducted at the conditions which were indicated as the best or optimum conditions of the double-stage fluidized bed gasifier in conjunction with an internal combustion engine.

Experimental Procedures

First Series

Usually, starting-up a fluidized bed is accomplished by conventional methods, using oil or LPG as fuel. However, in this study, a new start-up method was developed. After a bed material (rice husk) was loaded to a certain height, about 50 c c. of kerosene was spread uniformly over the slumped bed. A piece of cloth soaked in kerosene was lit and dropped on the bed through a drain port. Air was adequately supplied into the bed for complete combustion. Additional rice husk was fed into the bed and the

temperature started rising.

After the temperature inside the bed reached a certain temperature, air supply was reduced so that partial combustion could occur in the bed. The bed was fluidized until a stable condition was reached, then data acquisition was started. The stable condition was determined by using an automobile exhaust gas indicator which measured the concentration of CO in combustible gas. The stable condition is assumed to be the condition when the percentage of CO in the combustible gas is constant or stable.

Exhaust gas from the fluidized bed, after passing through a cyclone to remove fine particulates and a tube array to reduce the temperature, was drawn from the outlet pipe using an aspirator bulb and was kept in a cylindrical glass container using a water replacement method.

An orsat gas analyzer was used to determine the concentration of the exhaust gas which is theoretically composed of CO, CO_2, O_2, H_2, CH_4 and N_2. Unfortunately, the available orsat was able to determine the concentration CO_2, CO and O_2 only. Thus, the concentrations of the other gases (H_2, CH_4 and N_2) were combined as one value.

A number of tests were conducted by varying the air flow rates and the rice husk feed rates. The conditions for each individual run, along with the test results, are shown in Table 15.2.

Second Series

The second series of tests were intended to be for double fluidized bed gasification. The start-up procedure was also the same as for the first series. After the temperature inside the first stage was high enough, rice husk was fed into the second stage, then both stages of the bed were fluidized.

Data taking was also started when the fluidized bed was at a stable condition. A number of tests were conducted by varying the air flow rates. The conditions for each individual run along with the test results are shown in Table 15.3.

Third Series

Results from the second series indicated that the producer gas from the double fluidized bed yielded a maximum percentage of carbon-monoxide when the air flow rate was varied between 0.18 and 0.22 m /min. Thus, the third series was started using the results of this optimum air flow rate.

Table 15.2 Operating Conditions and results of one-stage fluidized bed gasification of rice husk.

Run No.	Rice Husk Feed Rate (kg/min)	Air Flow Rate (m3/min)	Superficial Velocity (m/s)	CO (%)	CO_2 (%)	O_2 (%)	N_2 + Other (%)
L1	0.22	0.150	0.26	9.1	8.9	4.0	78.0
L2	0.22	0.166	0.29	9.4	13.1	8.1	69.4
L3	0.22	0.188	0.33	7.4	9.8	5.0	77.8
L4	0.22	0.432	0.76	2.5	10.8	5.9	80.8
L5	0.22	0.340	0.59	3.7	12.8	3.3	80.2
L6	0.22	0.309	0.54	1.3	14.0	2.5	92.2
L7	0.22	0.275	0.48	2.6	11.8	3.6	82.0
L8	0.22	0.259	0.45	3.2	12.6	2.0	82.2
L9	0.22	0.241	0.42	6.9	11.6	2.2	79.3
U1	0.18	0.050	0.08	5.6	16.6	0.5	77.3
U2	0.18	0.071	0.12	13.3	16.2	0.4	70.1
U3	0.18	0.086	0.15	18.1	11.1	5.8	65.0
U4	0.18	0.112	0.19	22.4	14.8	0.6	62.2
U5	0.18	0.159	0.28	18.1	12.4	2.7	66.8
U6	0.18	0.213	0.37	15.0	11.6	2.2	71.2

Table 15.3 Operation conditions and results of double-stage fluidized bed gasification of rice husks.

Run No	Rice Husk Feed Rate of 1st stage (kg/min)	Rice Husk Feed Rate of 2nd stage (kg/min)	Air Feed Rate (m3/min)	Superficial Velocity (m/s)	CO (%)	CO_2 (%)	O_2 (%)	N_2 +Other (%)
D1	0.22	0.18	0.100	0.17	10.7	11.2	5.8	72.3
D2	0.22	0.18	0.180	0.31	16.5	8.6	2.9	72.0
D3	0.22	0.18	0.284	0.49	11.8	13.6	1.6	73.0
D4	0.22	0.18	0.301	0.52	15.8	10.0	0.9	73.3
D5	0.22	0.18	0.317	0.54	11.7	11.0	1.1	76.2
D6	0.22	0.18	0.166	0.28	11.8	13.8	1.4	73.0
D7	0.22	0.18	0.224	0.38	14.1	9.9	2.3	73.7
D8	0.22	0.18	0.431	0.74	1.5	12.4	3.0	83.1
D9	0.22	0.18	0.187	0.32	18.3	7.5	0.7	73.5
D10	0.22	0.18	0.334	0.57	10.7	14.2	2.1	73.0
D11	0.22	0.18	0.132	0.23	16.6	12.2	3.1	68.1

A four cylinders, four cycle spark ignition engine, having a displacement volume of 1300 cc., was used in this study. Producer gas, after passing through a cyclone, a cooling system and a filter, was introduced to a gas mixture chamber where mixing of producer gas and air occurred; then the mixture was carried into the combustion chambers by the vacuum effect.

The start-up procedure of the fluidized bed gasifier was also the same as of the second series. The air flow rate was set to be 1.22 m^3/min, while the rice husk feed rates of the lower and upper stage were set at 0.22 and 0.18 kg/min respectively.

The spark ignition engine was primarily started using regular gasoline. After the engine was warm, the gasoline supply was gradually decreased and the mixture of producer gas and air was introduced to the engine. After the gasoline supply was turned off, the engine was run entirely using producer gas.

In order to get the engine performance curve when using producer gas, the engine was connected to a hydraulic torque dynamometer. Load was supplied to the dynamometer and the data on brake torque and dynamometer speed were measured. The brake power was then calculated using the data on brake torque and engine speed. Data and test results are shown in Table 4.

The data on engine performance when using regular gasoline were also measured for comparison. The collected data included brake torque, engine speed and fuel consumption. The final results were the brake power and brake specific fuel consumption (bsfc) which was the ratio of the fuel consumption to the brake power. Data and test results are shown in Table 5.

Table 15.4 Data and results of engine performance using producer gas

Run No.	Engine Speed (rpm)	Torque (N-m)	Brake Power (kw)
E1	3300	8.8	3.041
E2	3000	9.0	2.827
E3	2500	12.0	3.141
E4	2000	14.8	3.099
E5	1500	27.0	4.241

Table 15.5 Data and results of engine performance using regular gasoline

Run No	Engine Speed (rpm)	Torque (N-m)	Fuel Consumption (secs.for 50 c.c)	Brake Power (kW)	Brake Specific Fuel Consumption (liter/kW-hr)
E6	3500	22.0	35.0	8.063	0.637
E7	3000	28.7	36.5	9.016	0.547
E8	2500	37.5	38.4	9.817	0.477
E9	2000	45.5	42.8	9.529	0.441
E10	1500	52.0	50.1	8.168	0.439
E11	1300	54.0	56.7	7.351	0.431

E. DISCUSSION AND ANALYSIS

Discussion on The Fluidized Bed Gasifier

In order to study the performance of the fluidized bed gasifier, results on gas composition, especially the concentration of carbon monoxide in the producer gas, must be carefully considered. The results of the carbon monoxide concentrations at different air flow rates from Table 2 and 3 are plotted and shown in Figure A15-4. It can be seen that the carbon monoxide concentrations of the producer gas obtained from the double-stage fluidized bed are much higher than the ones obtained from the single-stage fluidized bed. This indicated that the reduction reaction or Boudouard reaction occurred in the second stage, where carbon dioxide from the first stage reacted with hot carbon to produce more carbon monoxide.

However, the maximum carbon monoxide content obtained was 18% which was still rather lower than the expected value of 32% which was indicated by Beagle (1978). This might be due to the fact that the temperature inside the second stage was lower than 900 °C and less carbon dioxide was reduced to carbon monoxide.

In order to confirm this phenomenon, the concentration of carbon dioxide obtained from the results in Table 2 and 3 is plotted and shown in Figure A15-5. It can be seen that the carbon dioxide content obtained from the double stage was lower than the one obtained from the single stage.

During operation, only one problem on the double-stage fluidized bed was observed. The clogging of the second stage gas distributor was found after a short period of operation. After shutting down the fluidized bed, careful inspection of the gas distributor was done. It was found that clogging occurred because of a mixture of unburned fine particulates and tar formed beneath the gas distributor. After one hour of operation, these unburned particulates and tar could form a sticky layer about 0.5 cm in thickness, and this layer totally clogged the whole gas distributor.

Originally, the gas distributor of the second stage was a single plate with 32 perforations of 0.20 cm diameter. Some modification was done by adding more perforations and increasing the diameter size. The final gas distributor had 64 perforations of 0.40 cm diameter. This showed a lot of improvement during operation. However, clogging still occurred but took longer time. It was observed that the whole gas distributor was clogged within 4-6 hours after starting the fluidized bed.

Discussion on The Spark Ignition Engine Performance

The most important problem that had to be solved in this study was the ability to supply tar-free producer gas to the engine. In the design work, it was intended that only one array of tubes would be used for the purpose of air-cooling the gas. During the operation, it was found that the temperature had dropped below the gas dew point temperature and most of water vapor and tar condensed in this cooler. However, the designed system was not able to separate the condensate from the gas stream. Thus, an additional separator, made up of a 15 cm. diameter pipe filled with fine iron wool, was connected to the designed system. It was found that the new separator performed rather well.

In order to study the engine performance, results on brake power and brake specific fuel consumption are plotted and shown in Figure A15-6. It was observed that the maximum power output from the engine running on producer gas occurred when the engine speed was relatively slow (around 1500 rmp). At higher engine speed, performance usually decreased. This is due to the slower rate of flame propagation inside the combustion chamber.

Furthermore, it was found that the power output obtained from the engine running on producer gas was about 40-50% of that running on regular gasoline. This is due to the low heating value and density of the mixture of producer gas and air, compared to that of the mixture of gasoline and air. Also, the power output was reduced due to the gas temperature which was higher than that of the ambient air.

The most crucial result obtained from the study was the available brake power of 4.241 kW at 1500 rmp which was lower than the desired brake power of 10 kW. This was due to the low quality of producer gas that was generated. During the engine performance test, an orsat gas analyzer was also used to determine the carbon monoxide content in the producer gas. It was found that the carbon monoxide content was only 16.7% which was extremely low, compared to the expected value of 32%.

The power output can be significantly increased by increasing the compression ratio of the engine, but this method is found to shorten the engine life expectancy and also makes starting the engine more difficult.

Overall Efficiency

If the heating value of rice husk is 12.5 MJ/kg and the rice husk feed rate is 0.4 kg/min, then the overall efficiency of the system running on producer gas at 1500 rpm will be 5.08%. In case of the engine operating with regular gasoline, if the heating value of the regular gasoline is 39.2 MJ/litre, then the overall efficiency of the system at 1500 rpm will be 20.07%.

It can be seen that the overall efficiency of the system operating with producer gas generation is lower than that of the system operating with regular gasoline at the same engine speed. This is due to the loss of converting the energy from rice husk to producer gas which mainly depends on the efficiency of the fluidized bed gasifier. This low overall efficiency is quite reasonable, compared to the results obtained from charcoal gasifier developed by Coovattanachai (1982). According to his results, an overall efficiency of 7% was achieved for the small-scale charcoal gasifier.

Even though the overall efficiency of the system obtained from this study was quite low, it is still quite possible to increase the overall efficiency by improving the performance of various parts of the system, especially the fluidized bed gasifier. No attempt has been made to improve the overall efficiency of the system, since the main objective of this study is to show that the designed system is both economically and technically feasible.

Economic Analysis

In order to evaluate the system with respect to the possibility of acceptance by the intended users and to show that this system is economically feasible, the economic analysis must be carefully considered. Usually, electrification in rural areas is done using diesel electrical generation. Thus, comparison between the two systems, a fluidized bed gasifier using rice husk in conjunction with a gasoline engine and a diesel electric generator will be studied. The criteria used in this study will be the benefit cost ratio and the break-even electricity utility rate per kwh for both systems. The benefit cost ratio is the ratio between the benefit which will come solely from fuel savings as a result of replacing diesel fuel by rice husk and the investment cost of the new system.

The assumptions used in the economic analysis are summarized in Table 15.6 and can be described as follows:

a) Fixed cost: The cost of the whole gasifier system is 90,000 Baht which can be divided into 40,000 Baht for the gasifier material cost, 20,000 Baht for labor cost, 10,000 Baht for a used gasoline engine, 20,000 Baht for an air supply system and 10,000 Baht for a 5 kW 220 Volt, single phase generator set. The cost of the diesel generator, also 5 kW, 200 Volt, single phase is 30,000 Baht.

b) Maintenance cost: The maintenance cost for the gasifier and the diesel system is 5000 and 2000 Baht respectively.

c) Operating cost: Operating cost is solely the fuel cost. The operating cost of the gasifier system is nil since the rice husk is free. The small diesel engine usually consumes 0.4 litre/kWh or 3.20 Baht /kWh.

d) Power output: The power output of the gasifier system is 4 kW, since 1 kW is consumed for the air and rice husk supply system. The power output of the diesel system is 5 kW.

e) Annual operating period: Both systems are operated 4 hours daily throughout the year.

f) System lifetime: System lifetime of both systems is assumed to be 10 years.

g) Interest rate: Interest rate is 12% which is based on commercial bank rates in 1983.

h) Salvage Value: Salvage value of the gasifier and diesel system is assumed to be 20,000 and 10,000 Baht respectively.

In order to determine the break-even electricity utility rate per kWh, an equivalent uniform annual cost (EUAC) method will be used. The EUAC is the annual loan bank payment plus the M/O cost minus the salvage value.

EUAC = Annual payment + M/O cost - Salvage value

The annual payment of the gasifier system is 90,000 (CRF,12%,10 years) or 15,928 Baht. The annual payment of the diesel system is 30,000 (CRF,12%,10 years) or 5,310 Baht. The annual salvage value of the gasifier system is 20,000 (SFF,12%,10 years) or 1,140 Baht and that of the diesel system is 10,000 (SFF,12%,10 years) or 570 Baht. The M/O cost of the gasifier system is 5,000 Baht and that of the diesel system is 25,360 Baht. The EUAC for the gasifier and the diesel system is 19,788 and 30,100 Baht respectively. Thus, the cost per kWh for the gasifier and the diesel system is 3.39 and 4.12 Baht per kWh respectively. The breakdown of the annual costs for both systems is shown in Table 15.7.

In order to determine the benefit cost ratio, the present worth (PW) method of the costs and benefits will be used. The present worth of the benefits is the yearly saving plus the salvage value.

The present worth of the fixed costs is 90,000 Baht and that of the M/O cost is 3,000 (SPWF,12%,10 years) or 16,950 Baht. The present worth of the yearly saving is 23,360 (SPWF,12%,10 years) or 1140 Baht. Thus, the present worth of costs is 106,950 Baht and the present worth of benefits is 133,124 Baht. Finally, the benefit cost ratio is 1.25.

It can be seen that the designed system is economically feasible since the cost per kWh of the designed system is lower than that of the diesel system. Furthermore, the benefit cost ratio is more than one.

Table 15.6 Assumptions used in the economic analysis

Variable	Gasifier System	Diesel System
Fixed Cost (Baht)	90,000	30,000
Maintenance Cost (Baht)	5,000	2,000
Operating Cost (liter/kWh)	-	0.4
(Baht/kWh)	-	3.20
Power Output (kw)	4.0	5.0
Annual Operating Period (hr)	1460	1460
System Lifetime (years)	10	10
Interest Rate (%)	12	12
Salvage Value (Baht)	20,000	10,000

Table 15.7 Breakdown of the annual costs for the gasifier and the diesel system.

Cost Component	Gasifier System	Diesel System
Annual loan payment (Baht)	15,928	5,310
Maintenance (Baht)	5,000	2,000
Operation (Baht)	-	23,360
Annual salvage value (Baht)	1,140	570
Total annual cost (Baht)	19,788	30,100
Annual power output (kWh)	5,840	7,360
Overall power cost (Baht/kw-hr)	3.39	4.12

CONCLUSIONS

1. The results from this study indicated that electricity generation using a gasoline engine operating on producer gas from a rice husk fluidized bed gasifier was technically feasible.

2. The maximum carbon monoxide content in producer gas is 18% which was still lower than the results obtained by other researchers.

3. The only problem that was found during operation was the clogging of unburned fine particulates beneath the second-stage gas distributor.

4. The brake power output obtained from a four-cylinder, four-cycle gasoline engine operating on producer gas was 4.241 kW at 1500 rpm which was about 40% of that obtained from the same engine operating on regular gasoline.

5. The overall officiency of the whole system was quite low, about 5.08% at full load, compared to about 20.87% when operating using regular gasoline.

6. The system was also economically feasible. A comparison with a diesel electrical generation system indicated that the cost per kWh of the gasifier system was lower by 0.73 Baht/kWh. Furthermore, the benefit cost ratio of replacing a diesel generator system by a gasifier system for money saving was 1.25.

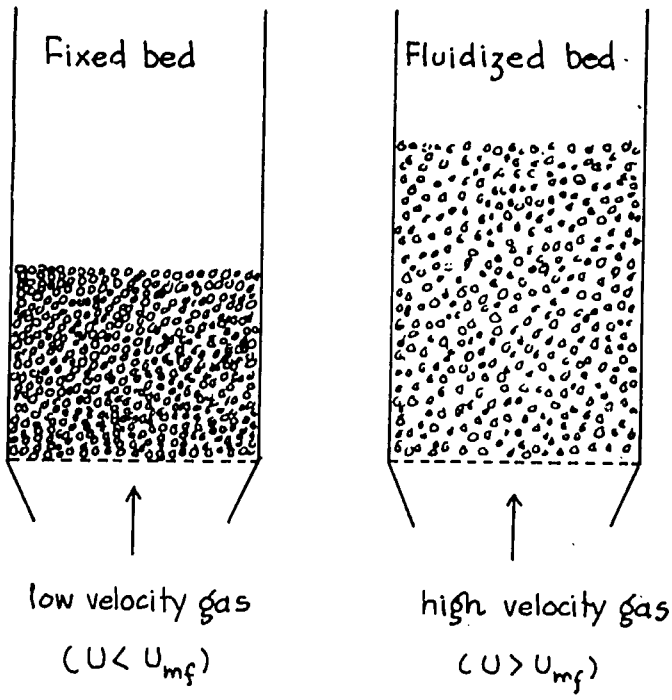

Figure A15-1 - Schematic diagrams for a fixed bed and a fluidized bed.

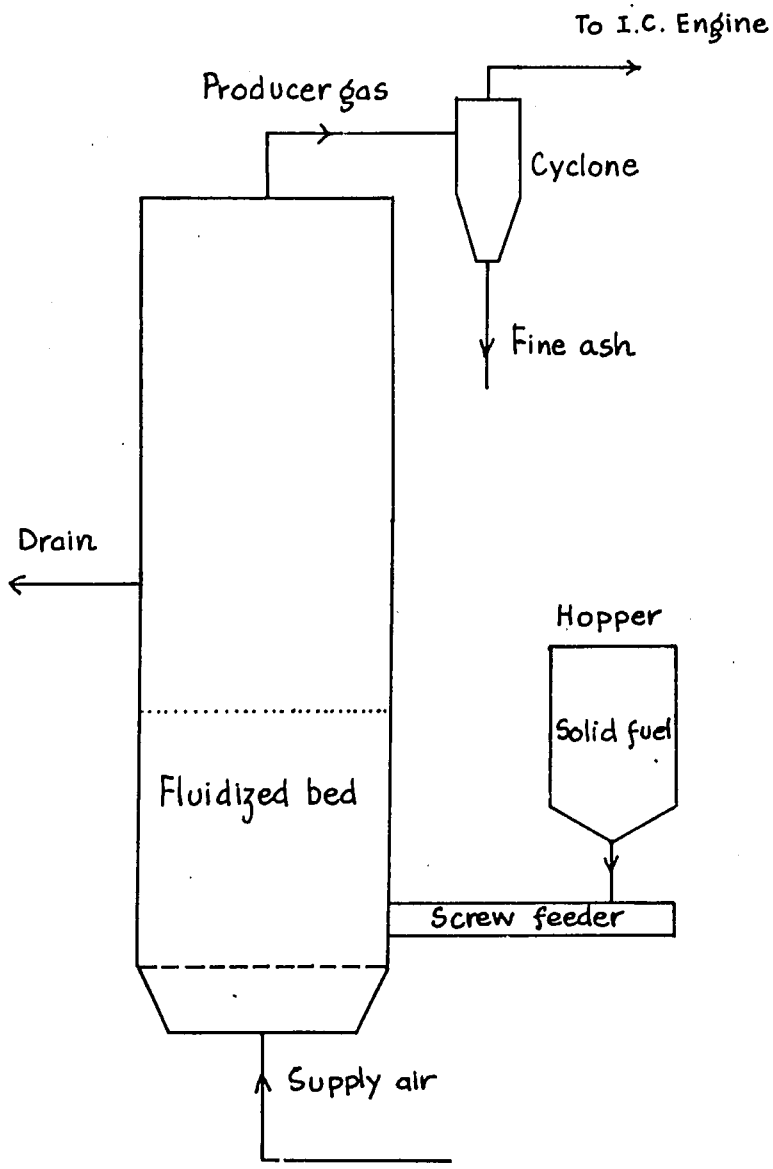

Figure A15-2 - Schematic diagram of a fluidized bed gasifier.

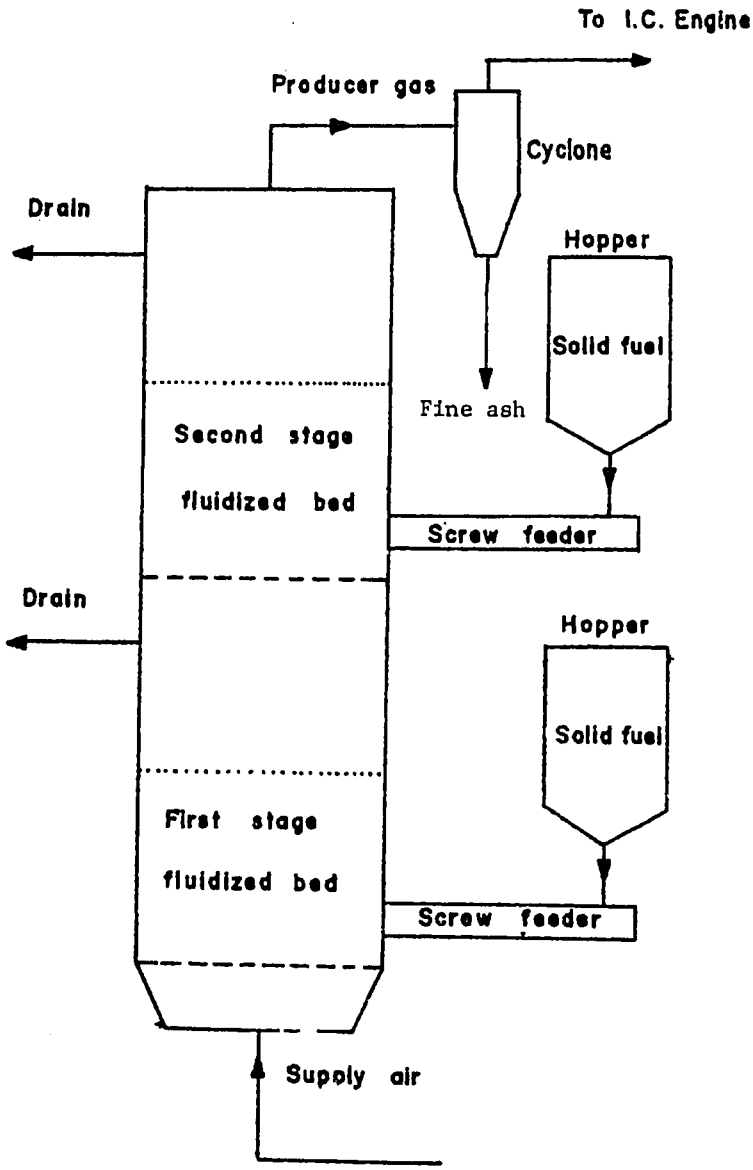

Figure A15-3 - Schematic diagram of a two-stage fluidized bed Gasifier.

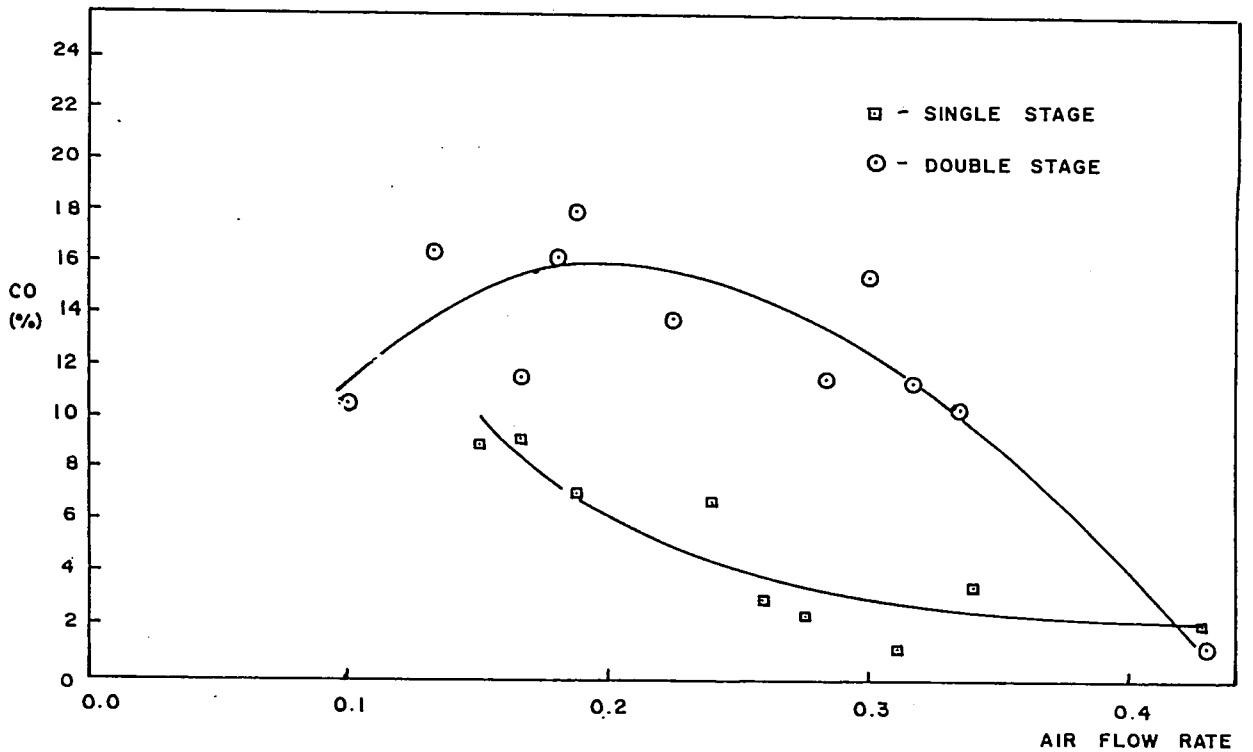

Figure 15-4 - The concentrations of CO at various air flow rates

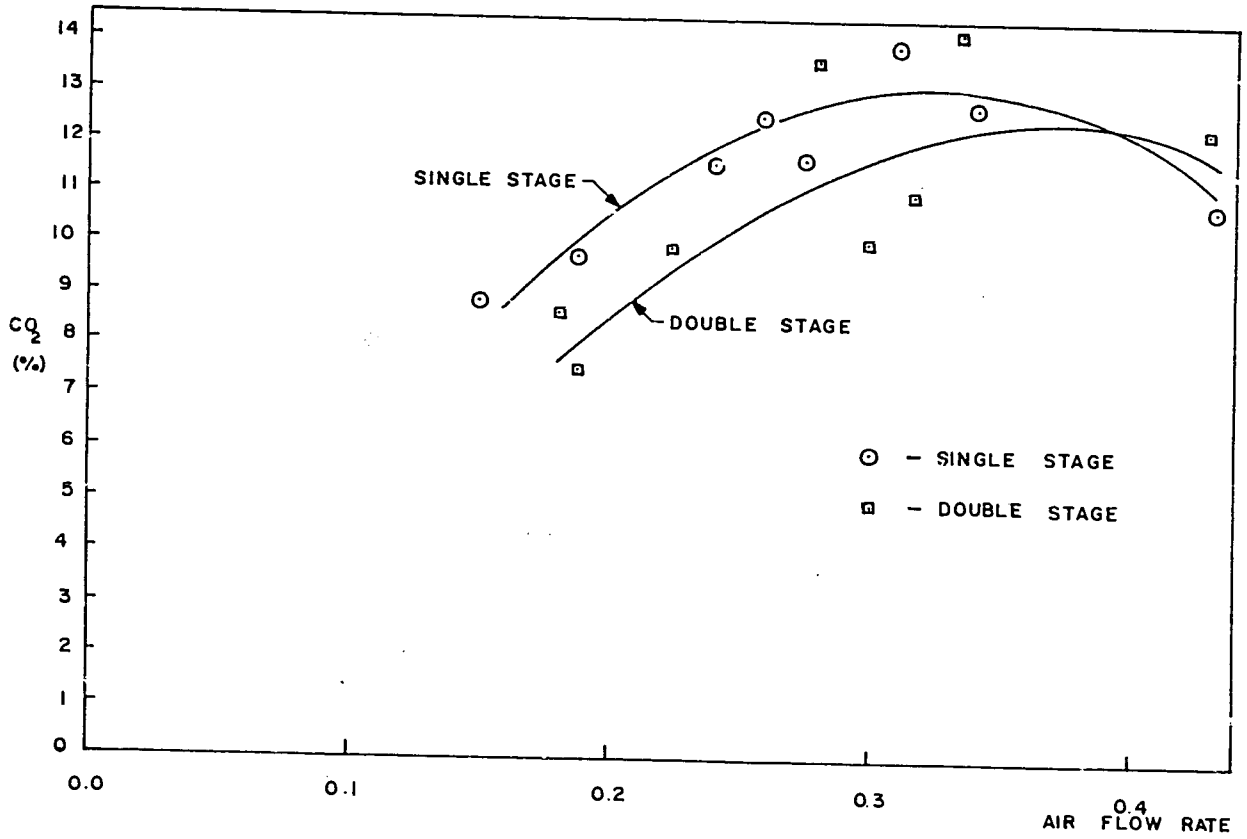

Figure 15.5 - The concentrations of CO_2 at various air flow rates

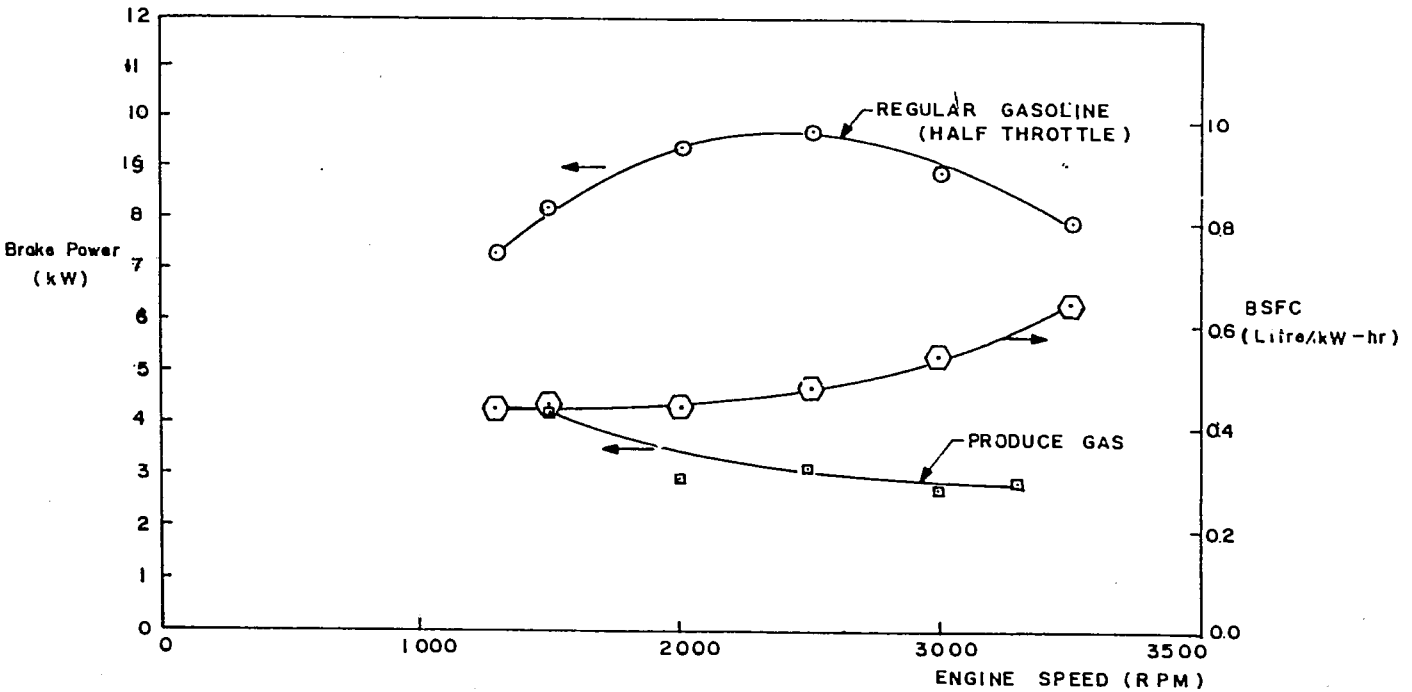

Figure A15-6 - Engine performance curves

a

b

Figure A15-7 - the Fluidized Bed Gasifier. (Unit Number 2)

a - View of overall unit.

b - View of lower feeding System.

Previous Page Blank

Previous Page Blank

ANNEX XVI

Previous Page Blank

ANNEX 16

16 HP GASIFIER (UNITS NUMBER 1 AND 2)

This 16 hp gasifier system which was divided into 2 prototypes was designed, constructed and tested at the Prince of Songkha University by Dr. Naksitte Coovattanachai. This is the report of the work done in the project.

A. INTRODUCTION

There is considerable interest in developing gasification equipment using wood as compared to against charcoal. The interest lies in the fact that charcoal contains only half of the energy of the original wood it was made from. However, gasifying wood and gasifying charcoal in the same gasifier will result in a tar-ladden gas and a more tar-free gas respectively. Thus the Philippine gasifier program decided to minimize the risk of producing tar-ladden gas from wood and opted for charcoal gasification at the expense of reducing overall conversion efficiency. The Philippine program would go in this direction until absolutely certain that gas from wood gasifiers can either be produced tar-free or at a level that can be cleaned at a reasonable cost. The aim of this 16 hp wood gasifier system is to determine whether an engine grade producer gas can be obtained. Thus unit number 1 was designed for electricity generation and unit number 2 was designed for water pumping.

B. DETAILS OF UNIT NUMBER 2

The 16 hp Gasifier (Unit Number 2) was designed to operate on wood chips and was to be used to pump water. The main point of interest was gas quality. The design chosen was a choke plate design through which the tar would be cracked into gases. The design is shown in Figure A17.1. The cleaning system used was a packed bed water scrubber as the main cleaning system. The engine used was an ISUZU 2200 cc. diesel engine connected to a 5 inch diameter water pump.

C. OPERATION OF 16 HP GASIFIER NUMBER 2

The 16 hp water pumping wood gasifier system was operated a total of 30 hours with the following major results :

The operation of the choke-plate gasifier was very smooth and the gas coming out from the gasifier was seemingly of good quality in that tar content seemed to be low (compared to past experience with other wood gasifiers).

The packed bed water scrubber gas cleaning system operated well but needed some slight improvements.

The diesel replacement percentage was a maximum of 50%.

D. CONCLUSIONS AND RECOMMENDATIONS OF THE DEVELOPMENT OF THE 16 HP GASIFIER (UNIT NUMBER 2)

- The choke plate gasifier using wood operates well and seems to be able to produce a gas that can be cleaned at reasonable cost in a small-scale (16 hp) gasifier. There is lack of evidence in the literature as to whether a smaller wood gasifier may be produced. It would be important in future work to attempt to quantify tar content of gas from wood producers.

- The packed bed water scrubber gas cleaning system seems to be a good concept for tar removal of gas from wood gasifiers but the scrubber needs to be optimized. However, the gas obtained in this project was clean enough to feed to a diesel engine.

- Although the diesel oil replacement obtained was only 50% using the above mentioned engine, it has been shown in other work both in this project and by Dr. Ibarra Cruz that diesel oil replacement depends on many factors. Depending on engine type, loads, and rpm, the diesel oil replacement can approach 100%. For the particular engine used here in this prototype a maximum diesel oil replacement of 50% is uneconomical. It would be better to continue development of this gasifier with another diesel engine or with a gasoline engine.

E. DEVELOPMENT OF THE 16 HP GASIFIER (UNIT NUMBER 1)

The 16 hp Gasifier (Unit Number 1) was meant to utilize the same gasifier as unit number 2 (Figure A16-1) and meant to generate electricity. The development of this unit is currently underway and no data is available. It is believed that the main item of interest is the dry cleaning train of unit number 1 which we may insert to compare with the water scrubber of unit number 2.

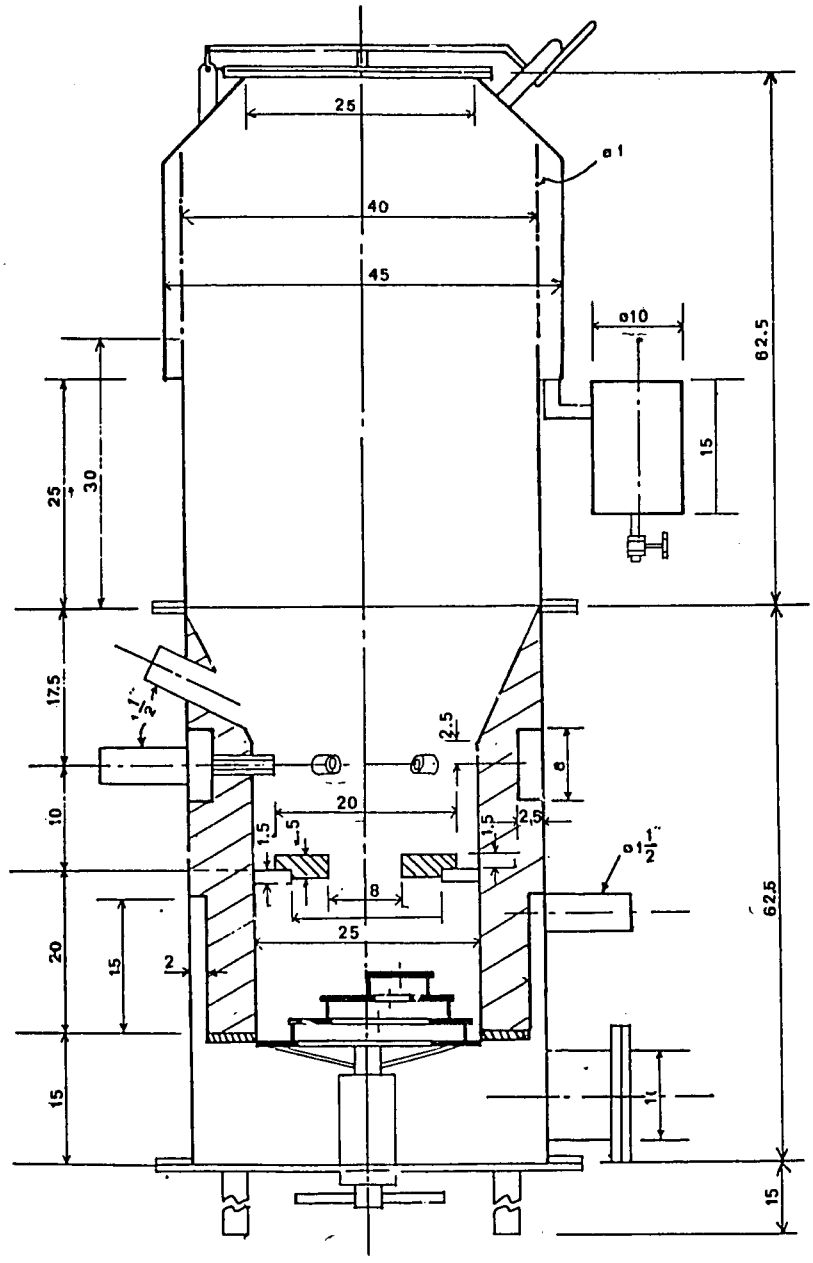

Figure A16-1 - 16 HP Gasifier (Unit Number 1 and 2) downdraft wood chips fuel.

Previous Page Blank

ANNEX XVII

Previous Page Blank

ANNEX 17

DESIGNS OF CHARCOAL GASIFIER CLEANING SYSTEMS USED IN THIS PROJECT

For most of the charcoal producers developed in this project the cleaning trains were based on units that are of similar designs. As a result the cleaning systems of some of the units were not presented in detail, in particular the 500 We Gasifier (Unit Number 3), 500 We Gasifier (Unit Number 4), 7 hp Gasifier (Unit Number 3). The 7 hp Gasifier (Unit Number 2) cleaning train has been presented in detail, in the equivalent annex and is based on similar gas cleaning designs as presented in this annex.

A. INTRODUCTION

Although charcoal gasifiers are capable of producing a relatively clear gas when compared to uncarbonized fuel gasifiers, it is not possible to utilize charcoal gasifier gas directly into an internal combustion engine. The reason stems probably from the amounts of volatile matter that still remain in the charcoal; thus depending on the charcoal volatile contents, one may obtain producer gas of differing quality. It is to be noted that if one considers wood as charcoal with 100% volatile content, then it is interesting to try to gasify a charcoal with a volatile content between 100% to 0% in order to determine what the maximum allowable volatile content is for gasifier fuel. In the future it is likely that the charcoal used in gasifiers will contain such a maximum allowable volatile content and still obtain a gas that can be cleaned within reasonable cost. Thus cleaning systems for charcoal gasifier gas are necessary and are expected to be necessary in the future.

B. PRINCIPLE OF GAS CLEANING

Producer gas from various gasifiers and from various raw materials is very different in particulate contents, tars and oils, and moisture contents. It is thus difficult to have standardized gas cleaning designs and these must be more or less custom designed for each application. However for any given system, there are two philosophies that may be used for gas cleaning. The first gas cleaning philosophy is to begin by removing particulates in a hot filter (above the dew point of the tars and oils, there is some question as to the filter temperature but some recommend temperatures above 150 ,others recommend temperatures above 200), and then remove the tars, oils, and water in a cooler. The advantage of this approach is that the particulate filter does not get wet and the particulates do not mix with the high viscosity tar to produce an even higher viscosity liquid difficult to remove from the system. The disadvantage of the hot filter system is that one must find a filtering material available locally, inexpensive enough for developing countries, and simple to maintain. The second gas cleaning philosophy is based on a cool fabric filter system for cleaning trains such as gasifier - water scrubber - filter or gasifier - air cooler - filter. The disadvantage of this second approach is that one has the risk of having tars and oil condensing on the filter fabric and quickly raising the pressure drop across the filter to an unacceptable level (for the hot filter approach the

dry cake may be removed from the fabric by cleaning with jets of compressed air impinging on the filter). The advantages of cold filters are that they are relatively easy to find and inexpensive as they operate at room temperature and do not have to be made from expensive fabric.

C. THE CHARCOAL GASIFIERS GAS CLEANING SYSTEM CHOSEN

The gas cleaning system chosen for the charcoal gasifiers mentioned in the preface of this annex is based on the old filter approach. The main cleaning trains used are as follows:

Necessary Units	(1)Gasifier	(3)Stone Impingement Filter	(5a)Cold Fabric Filter or	(56)Rice Husk Filter
Optional Units	(2)Cyclone	(4)Air Cooler	(6)Final Filter	

Some systems may utilize units 1-3-5 by themselves or units 1-3-5 plus one or more optional units.

The 500 We Gasifier (Unit Number 3) used units 1-3-5b. The 500 We Gasifier (Unit Number 4) used units 1-2-3-5b-6. The 7 hp Gasifier (Unit Number 3) used units 1-2-3-5a-6.

The cyclone use in the 3 above mentioned gasifiers is presented in Figure A17-1 and is comparable in size with the cyclone presented in the annex of the 7 hp Gasifier (Unit Number 2). This cyclone size was based on the size of cyclone used at the Prince of Songkhla University, and appropriateness of size was reiterated by Dr. Thomas B. Reed on a trip to Chulalongkorn University.

The stone impingement filter has a similar design as the designs presented in Figure A17-2. The containers shown are simply filled with stones of a chosen size which trap particulates and cool the gas. Sometimes coke particles replace the stones, but in all of the systems mentioned above stones were used.

The air cooler is shown in Figure A17-3. The figures are given as an example because none of the systems mentioned above used air coolers as gas contact with metal parts exposed to ambient air sufficient to cool the gas. We found this to be the case for the 500 We gasifier systems and 7 hp systems but not for anything larger than that. The dimensions of the gas cooler as shown in Figure A17-3 may be adequate for a system of 10 hp or somewhat higher, but probably not as high as 20 hp due to inadequate heat transfer area.

Figures A17-4 and A18-5 are sketches of two types of cold fabric filters used in this study. The fabric itself is a common piece of cotton used in bag manufacture. It is wrapped four times around a metal frame sketched in Figure A17-5. The cloth may either be washed and cleaned, or if the cloth becomes wet with tar, the cloth is thrown away and replaced. The gas enters at the bottom of the unit, passes into the center of the cloth filter assembly, then passes outwardly through the filter cloth and out of the assembly.

The rice husk filter uses a container almost exactly like the stone impingement filter described above.

The final filter element is a container sketched in Figure A17-5 and where a number of materials may be put in as final filter material. One of the best safety filter, as well as indicator of gas cleanliness, is cotton.

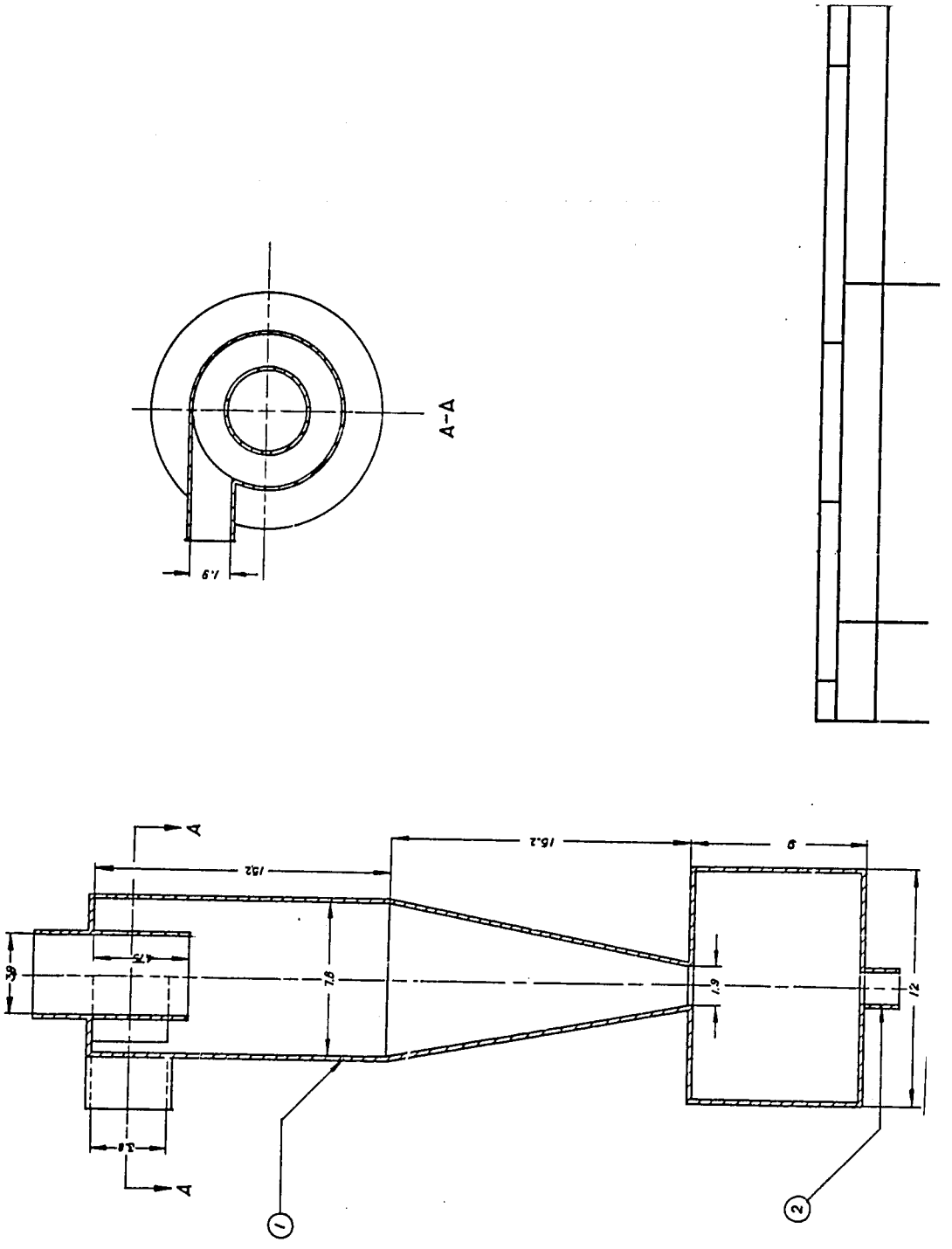

Figure A17-1 - Cyclone

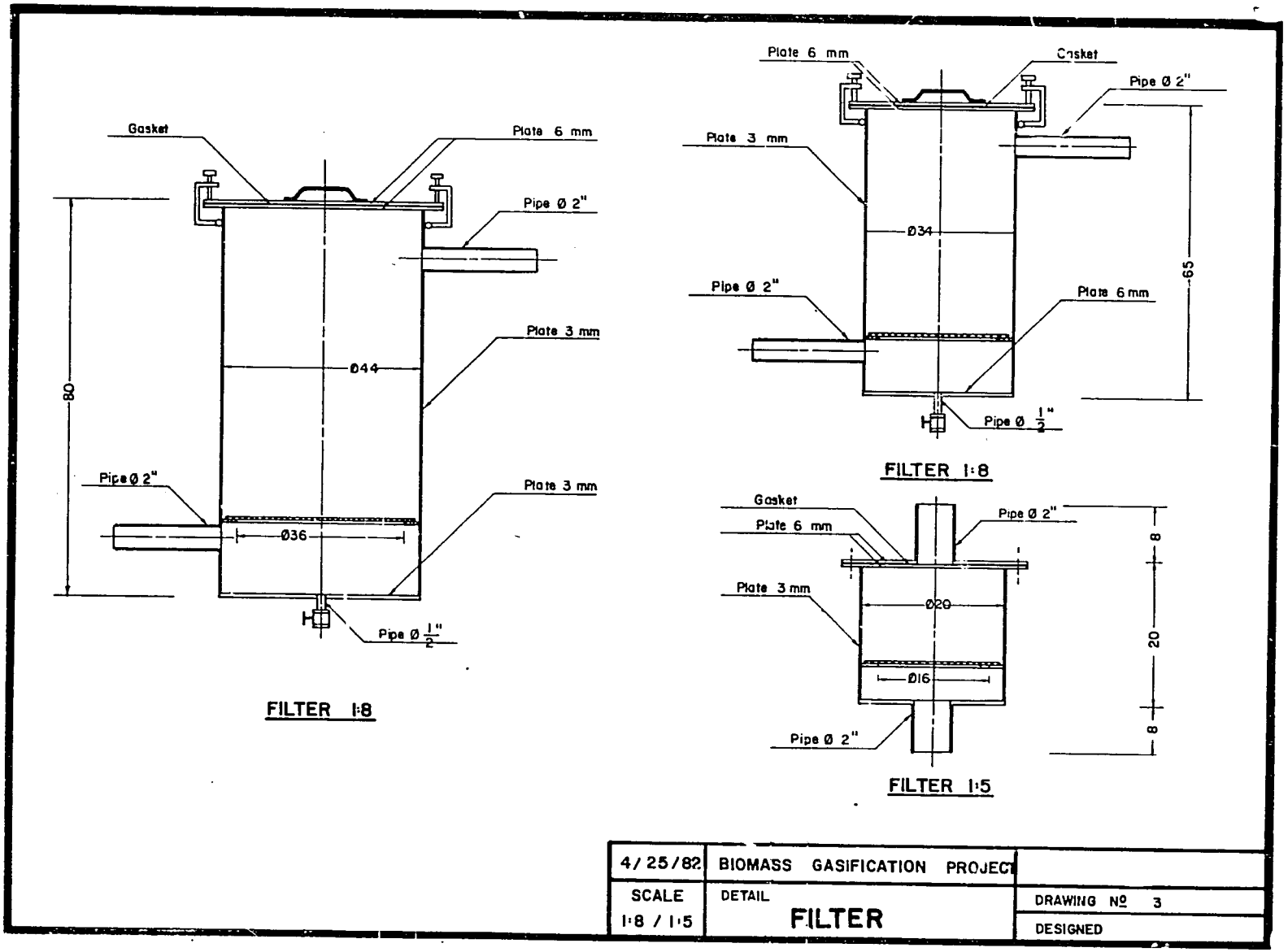

Figure A17-2 - Stone impingement filters of 3 sizes

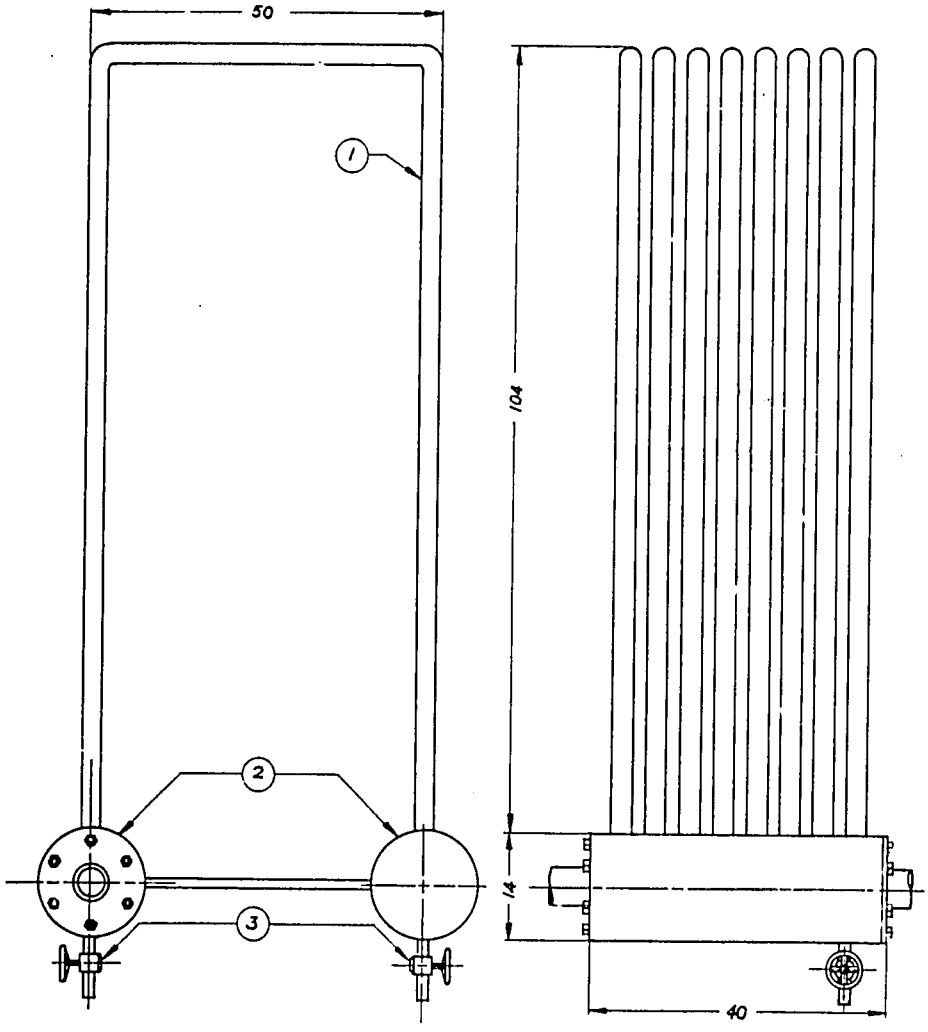

1. PIPE Ø 1" (BRASS)
2. FLANGE 1 1/2"
3. VALVE Ø 1/2"

4/25/84	BIOMASS GASIFICATION PROJECT	GASIFIER SYSTEM
SCALE 1:6	Detail COOLER	Drawing Nº
		Designed

Figure 17-3 - Air Cooler

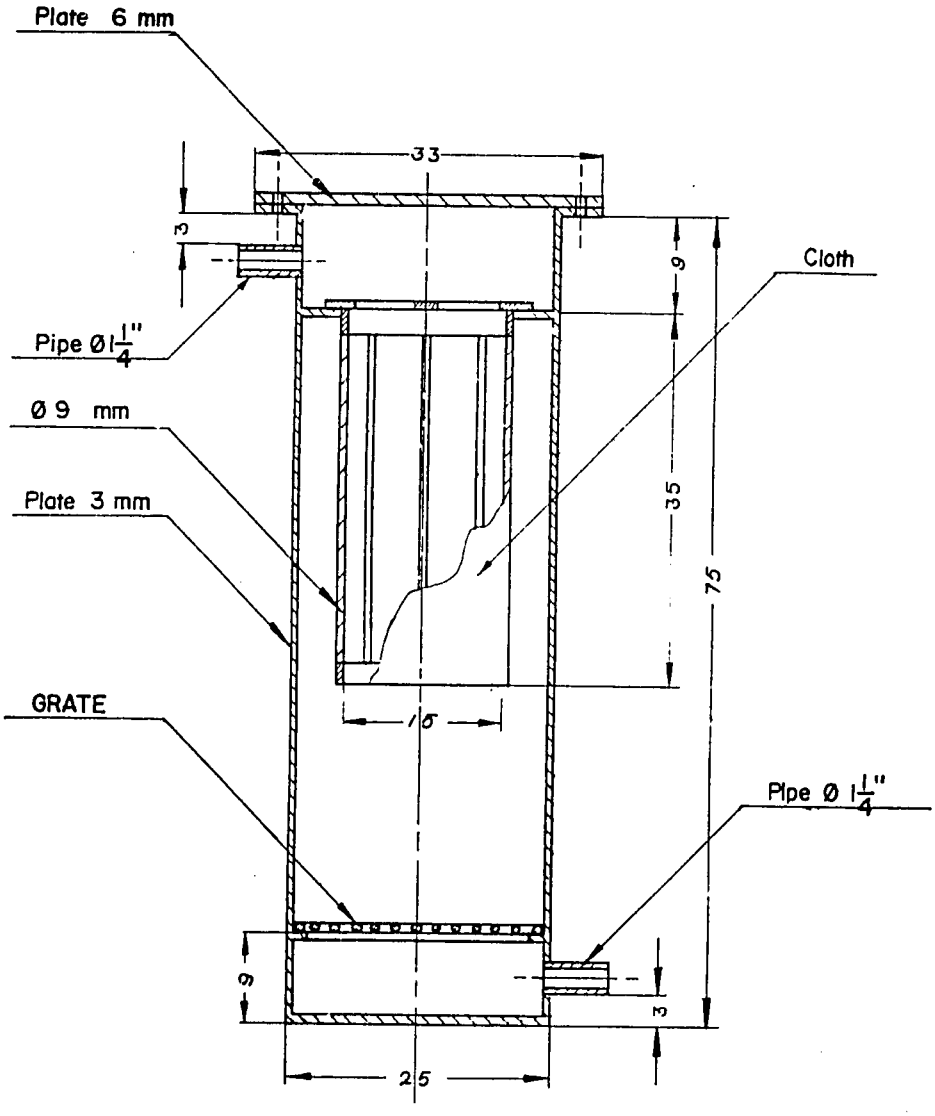

Figure A17-4 - Cold Fabric Filter

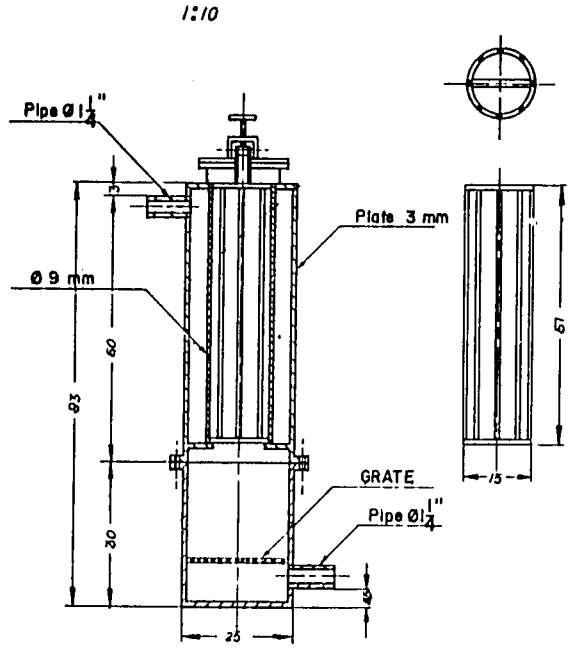

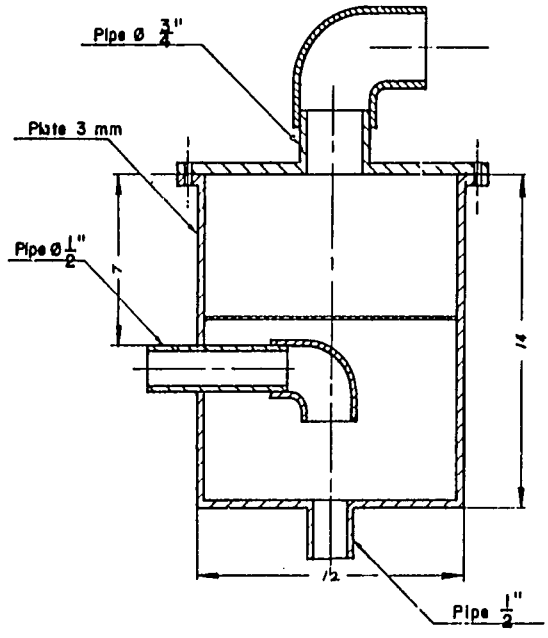

Figure A17-5 - Final Filter (bottom) and Cold Fabric Filter (top)

REFERENCES

Previous Page Blank

REFERENCES

Amyot, J., "Social and Economic Aspects of Dryer Use for Paddy and Other Agricultural Produce in Thailand", A report prepared for IDRC, May, 1983.

Arnold, John, Rural Energy Consultant, Personal Communication.

Arthayukti, W., "Biomass Conversion through Thermochemical Processes: An Overview for Research and Development Topics on Biomass Energy in Thailand", Unpublished communication in English.

Arthayukti, W., "Report of Study Tour on French Biomass Gasification Work", April 24-27, 1984.

Assavadakorn, P., "Biomass Utilization via Thermochemical Route", Master's Thesis, The University of Tokyo, March, 1984.

Beagle, E.C., "Rice-husk Conversion to Energy", FAO Agricultural Services Bulletin, No. 32, 1978.

Bonino, Jiovanni, Fiat Company, Personal Communication referring to a survey of gasifier users in Italy.

Cha Cheng Sao Province Rice Mill, Personal Communication on operating a rice husk gasifier, 1982.

Coovattanachai, Naksitte, "The Feasibility of Producer Gas in Electricity Generation", a paper presented at the First International Producer Gas Conference, Colombo, Sri Lanka, November 12-15, 1982.

Coovattanachai, Naksitte, " Gasifiers from Biomass", (in Thai), Proceedings of the Symposium on Technologies for Energy Savings and Increased Energy Use Efficiencies, The Engineering Society of Thailand, November 27-28, 1981.

Coovattanachai, Naksitte, "The Potential of Producer Gas as an Alternative Source of Energy", Proceedings of the FAO/FHI Regional Technical Consultation on Agricultural Wastes and Solar Technologies for Farm Energy Needs, June 23-30, 1982.

Coovattanachai, Naksitte, "Producer Gas in Electricity Generation", Proceeding of Papers, Fifth Miami Internation Conference on Alternative Energy Sources, Miami Beach, Florida, December 13-15, 1982.

Coovattanachai, Naksitte, Personal Communication.

Coovattanachai, Naksitte, Chongchareon, W., and Kooptarnound, C., "The Feasibility of Producer Gas in Electricity Generation", Journal of Energy Heat Mass Transfer, Vol. 4, No. 4, 1982, PP. 213-227.

Coovattanachai, Naksitte, et. al., "The Feasibility of Producer Gas in Electricity Generation", Renewable Energy Review Journal, Vol.4, No.2,1982.

Coovattanachai, Naksitte, et. al., "Milling Performance of Small Rice Milling Unit Fueled by Producer Gas", Proceedings of the Second Expert Consultation on Producer Gas Development in Asia and Pacific, FAO Regional Office for Asia and the Pacific, August, 1983.

Contrait, F. et. Al., "Volarisation Energetique des Dechets Agricoles dans les Exploitations Cotonnieres Familiales", En Petite Motorisation, au Mali, CEEMAT, France, 1981.

Cruz, I. "Producer Gas Technology for Rural Applications", FAO publication 1983.

FAO Regional Office, "Proceedings of the FAO/FHI Regional Technical Consultation on Agricultural Wastes and Solar Technologies for Farm Energy Needs," Bangkok, June, 1982.

FAO Regional Office, "Proceedings of the FAO Second Expert Consultation on Producer Gas Development in Asia and the Pacific Region," Bangkok, November, 1983.

Foley, G. and Bernard, G., "Biomass Gasification in Developing Countries", Earthscan, London, 1983.

Foley, G., Bernard, G., and Timberlake, C., "Gasifiers" Fuel for Siege Economies, Earthscan, London, 1983.

Goss, John R., University of California at Davis, Personal Communication.

Goss, John R., et. al., "Producer Gas: Another Fuel for Motor Transport", National Academy Press, Washington, D.C., 1983.

Jia, Peiyi, "The Application of Paddy Husk in Rice Mill", Proceedings of the FAO/FHI Regional Technical Consultation on Agricultural Wastes and Solar Technologies for Farm Energy Needs. FAO Regional Office, Bangkok, June,1982.

Kaupp, A., "Air Blown Gasification of Rice Hulls: Dependence of Gas and Solid Properties on Operating Variables", Ph.D. Thesis, University of California, Davis, 1983.

Kaupp, A., "Gasification of Rice Hulls Theory and Praxis", German Appropriate Technology Exchange, GATE, Eschborn 1, 1984.

Kaupp, A., and Goss, J.R., "The State of the Art for Small Scale (to 50 kWe) Gas Producer - Engine System", Department of Agricultural Engineering, University of California, Davis, 1981.

Kunni, D., "Update on Advanced Fluidization Research and Design: Fundamentals and Industrial Applications, New Fluidized Bed Oil Pyrolysis and Organic Waste Gasification Processes", Second World Congress of Chemical Engineering,Montreal, 1981.

Kunni, D., and Levenspiel, O., "Fluidization Engineering," John Wiley, 1969.

Kuramoto, Et. al., "New Circulation System to Fluidized Solids Applied to Biomass Gasification", University of Tokyo, Japan, 1981.

META Systems, "Initial Renewable Nonconventional Energy Technology Monitoring Report", A Consultant Report prepared for the National Energy Administration, Cambridge, Mass., January, 1982.

Molle, J.F., Presentation at the Biomass Gasification Workshop, Chulalongkorn University, Thailand, May 30 - June 1, 1984.

Philippines Bioenergy Program, Information obtained during the author's visit, March, 1983.

Rattanaprakan, Dr. Oran, NEA, Thailand, Personal Communication concerning the coconut shell gasifier in Sri Lanka.

Reed, T.B. and Markson, M., "Biomass Gasification Reaction Velocities", Solar Energy Research Institute, Golden, Colorado, 1983.

Reed, T.B. and Markson, M., "A Predictive Model for Stratified Downdraft Gasification of Biomass", Solar Energy Research Institute, Golden, Colorado, 1983.

Reed, T.B. and Markson, M., et. al., "A Mathematical Model for Stratified Downdraft Gasifier," Solar Energy Research Institute, Golden, Colorado, 1983.

Saunier, G.Y. et. al, "Evaluation and Selection of Lignocellulogic Wastes which can be Converted into Substitute Fuels", Asian Institute of Technology Project Report, December, 1983.

Seri, Generator Gas, the Swedish Experience from 1939-1945, (A translation of the Swedish book GENGAS), Solar Energy Research Institute, Golden, Colorado, January, 1979.

Skov, N.A. and Papworth, M.L., "The Pegasus Unit: Petroleum-Gasoline Substitute Systems", Pegasus Publishing Inc., Olympia, Washington, 1974.

Srimaharaja Company, Sriraja, Colburing Province, Thailand, Personal Communication.

Stassen, H.E.M. and Zijp, T., "The Gasification by Partial Combustion Project in Tanzania", Progress Report, Twente University of Technology, The Netherlands, July, 1980.

Takeda, S. "Experiment Test for the TK Type Biomass Producing Unit", Proceedings of the Second Expert Consultation on Producer Gas Development in Asia and the Pacific Region, FAO Regional Office for Asia and the Pacific Thailand, August, 1983.

Takeda, S., "Research on Gas Engine Driven by Agricultural Waste", Proceedings of the Second Expert Consultation on Producer Gas Development in Asia and the Pacific Region, FAO Regional Office for Asia and the Pacific, Thailand, June, 1982.

Thailand Nonconventional Renewable Energy Project, "A Survey of Charcoal Production Distribution, and Consumption in Thailand", Final Report Submitted to the National Energy Administration, August, 1983.

Vaing, G., CEEMAT, France, Personal Communication.

Vaing, G. and Delille, V. "Conception, Realisation and Essais d'un Prototype de Tracteur a Gasogene de Tracteur a Gasogene de Petite Puissance Destine aux Pays Tropicaux", Machinisme Agricole Tropical, No. 81, January - March, 1983, PP. 3-43.

Williams, R.O. and Horsfield, B. "Generation of low BTU Fuel Gas from Agricultural Residues; Experiments with a Laboratory Scale Gas Producer", Proceedings of the 1977 Cornell Agricultural Waste Management Conference, Ann Arbor Science, 1977.