PNAAC-474

39409

FEASIBILITY STUDY OF SRI LANKA TYRE CORPORATION FACTORY

FINAL REPORT

Prepared by:
EDMAC Staff
Ministry of Power and Energy
Colombo

in collaboration with

Hagler, Bailly & Company
Washington, DC

consultants financed by the
United States Agency for International Development

An activity undertaken for the
Industrial Energy Conservation Programme (IECP)

a component of the
National Energy Demand Management
& Conservation Programme (NEDMCP)

Sri Lanka

June 1984

Contents

	PAGE	TITLE
ACKNOWLEDGEMENT		
FOREWORD		
INTRODUCTION		
CHAPTER 1	1.1	TECHNICAL OPTIONS
	1.1	STEAM GENERATION AND DISTRIBUTION SYSTEM DESCRIPTION
	1.2	BOILER, STEAM DISTRIBUTION SYSTEM IMPROVEMENTS
	1.2	New Oil-Fired Packaged Boiler
	1.4	Multifuel Boiler
	1.5	Coal-Fired Boiler
	1.8	Fluidized-Bed Boilers
	1.10	COGENERATION SYSTEMS
	1.13	Oil-Fired Packaged Boiler/Back Pressure Steam Turbine
	1.15	Multifuel Conventional Boiler/Back Pressure Turbine System
	1.16	Multifuel Stoker Boiler/Extraction Condensing Turbine
	1.17	Thermal Fluid Heaters -- Packaged or Multifuel Types

	PAGE	TITLE
	1.19	Gasifier
	1.19	SELECTION OF MOST ATTRACTIVE OPTIONS
CHAPTER 2	**2.1**	**COST AND PERFORMANCE ASSUMPTIONS**
	2.1	OPTION 1: NEW OIL-FIRED PACKAGED BOILER
	2.1	Investment Cost
	2.2	Operation and Maintenance
	2.2	OPTION 2: NEW MULTIFUEL WOOD/OIL BOILER
	2.2	Investment Cost
	2.10	Operation and Maintenance
	2.10	Fuel Savings
	2.11	OPTION 3: NEW MULTIFUEL (WOOD/OIL) BOILER WITH BACK PRESSURE STEAM TURBINE
	2.11	Investment Cost
	2.11	Operation and Maintenance Costs
	2.12	Energy Savings
	2.12	OPTION 4: NEW MULTIFUEL BOILER (WOOD/OIL) WITH EXTRACTION CONDENSING STEAM TURBINE
	2.12	Investment Costs
	2.12	Operation and Maintenance Costs

	PAGE	TITLE
	2.12	Fuel Savings
	2.13	OPTION 5: NEW MULTIFUEL BOILER BURNING COAL AND OIL
	2.13	Investment Costs
	2.13	Operation and Maintenance Costs
	2.13	Fuel Savings
CHAPTER 3	3.1	FINANCIAL ANALYSIS
	3.2	FINANCIAL AND TAX CIRCUMSTANCES OF THE CORPORATION
	3.2	FINANCIAL STRUCTURE AND PROJECT PERFORMANCE
	3.5	FINANCIAL ANALYSIS OF PROJECT PERFORMANCE
CHAPTER 4	4.1	ECONOMIC ANALYSIS
	4.2	SOCIAL COST/BENEFIT ANALYSIS
	4.4	FOREIGN CURRENCY REQUIREMENTS ANALYSIS
APPENDIX A		ENERGY AUDIT REPORT SUMMARY
APPENDIX B		DETAILED RESULTS OF STEAM SYSTEM AUDIT
APPENDIX C		ENERGY AVAILABILITY AND PRICES 1984–2000

	PAGE	TITLE
APPENDIX D		TENDER DOCUMENTS
APPENDIX E		DETAILED RESULTS OF FINANCIAL/ ECONOMIC EVALUATION
APPENDIX F		EXPANSION/MODERNIZATION PROGRAM

Exhibits

Exhibit A	Sri Lanka Tyre Corporation: Capital Outlays for the Five Project Options (Values in current Rs. (000); installation begins third quarter 1984 and occurs over 4 to 6 quarters)
Exhibit B	Sri Lanka Tyre Corporation: Operating and Maintenance Expense for the Five Project Options (Values in current Rs. (000))
Exhibit C	Sri Lanka Tyre Corporation: Summary Results of Financial and Economic Analyses for the Five Project Options
Exhibit D	Proposed Project Arrangement
Exhibit 1	Tyre Production Line
Exhibit 2	Production, 1981 (units)
Exhibit 3	Production, 1982 (units)
Exhibit 4	Production, 1983 (units)
Exhibit 5	Range of Tires, Tubes, and Flaps and Production Capacity, 1984
Exhibit 6	Energy Consumption, 1981
Exhibit 7	Energy Consumption, 1982
Exhibit 8	Energy Consumption, 1983
Exhibit 9	Organization Chart -- Sri Lanka Tyre Corporation
Exhibit 10	SLTC Modernization and Expansion Program
Exhibit 1.a	Oil-Fired Packaged Boiler
Exhibit 1.b	Automatic Stoker Direct Combustion Solid Fuel Boiler
Exhibit 1.c	Coal-Fired Boilers: Types and Major Characteristics

Exhibit 1.d	Typical Industrial Fluidized-Bed Boiler
Exhibit 1.e	There are Two Basic Types of Industrial Cogeneration Systems
Exhibit 1.f	
Exhibit 1.g	Thermal Fluid Heater
Exhibit 2.a	Sri Lanka Tyre Corporation: Capital Outlays for the Five Project Options (Values in current Rs. (000); installation begins third quarter 1984 and occurs over 4 to 6 quarters)
Exhibit 2.b	Sri Lanka Tyre Corporation: Operating and Maintenance Expense for the Five Project Options (Values in current Rs. (000))
Exhibit 3.a	Sri Lanka Tyre Corporation: Development Period Outlays and Financing Requirements for the Five Project Options (Monetary values in current Rs.(000); i.e., values include general inflation at 10 percent p.a.)
Exhibit 3.b	Sri Lanka Tyre Corporation: Financial Performance for the Five Project Options (Monetary values in current Rs.(000); i.e., values include general inflation at 10 percent p.a.)
Exhibit 3.c	Sri Lanka Tyre Corporation: Sensitivity Analysis Summary for the Five Project Options (Monetary values in current Rs.(000); i.e., values include general inflation at 10 percent p.a.)
Exhibit 4.a	Sri Lanka Tyre Corporation: Social Cost/Benefit Analysis for the Five Project Options (Monetary values in constant Rs.(000) at mid-1984)
Exhibit 4.b	Sri Lanka Tyre Corporation: Foreign Currency Content of Specific Accounts for the Five Project Options (Foreign content in percent)
Exhibit 4.c	Sri Lanka Tyre Corporation: Foreign Currency Requirements Analysis for the Five Project Options (Monetary values in current Rs.(000); i.e., values include general inflation at 10 percent p.a.; positive values indicate use of foreign currency; negative values indicate generation of foreign currency)

Exhibit F.1 Status of Procurement of Machinery

Exhibit F.2 List of Equipment -- Modernization Program

Exhibit F.3 List of Equipment -- Tentative C&F Value

ACKNOWLEDGEMENT

This feasibility study was conducted under a joint program of the Energy Efficiency, Demand Management and Conservation (EDMAC) Task Force, Ministry of Power and Energy, Sri Lanka, and the United States Agency for International Development. The analyses for the study were performed using a conservation project financial evaluation model developed by Hagler, Bailly & Company, Washington, DC, USA, under contract to the Office of Energy, Bureau for Science and Technology, USAID.

FOREWORD

This feasibility study is part of the Industrial Energy Conservation program (IECP) component of a comprehensive National Energy Demand Management and Conservation Programme (NEDMCP) undertaken by the Energy Efficiency, Demand Management and Conservation (EDMAC) Task Force of the Ministry of Power and Energy of Sri Lanka.

The four-phase IECP was launched by EDMAC in late 1982. Phase 1, Sensitization, was completed in 1983, and Phase 2, which is receiving assistance from the United States Agency for International Development (USAID), has entailed extensive training of plant staff and government officials in energy management for the last 12 months, including on-site training in energy auditing techniques. A major objective of Phase 3 of the IECP is the implementation of specific projects with the potential for significant energy cost savings. A feasibility study is required in those instances when a project would involve large capital expenditure and some degree of uncertainty, but is likely to result -- if technically sound and economically and financially justified -- in significant energy savings. In Phase 4, scheduled for 1985, the IECP will be entirely self-sustaining, with private and government institutions providing energy audit consultancy services, while EDMAC plays a catalytic and policy-oriented role.

The topic of this feasibility study was identified jointly by EDMAC and the Sri Lanka Tyre Corporation plant management on the basis of previous analysis and a preliminary energy audit conducted by USAID specialists in December 1983 and confirmed by the results of a detailed energy audit undertaken by the same team in March 1984. Because of its replicability in other plants in Sri Lanka, this study is expected to trigger similar initiatives, which could ultimately help to reduce Sri Lanka's foreign exchange expenditures caused by consumption of imported oil in the industrial and commercial sectors.

This feasibility study is part of the Industrial Energy Conservation (IECP) component of a comprehensive National Energy Demand Management and Conservation Programme (NEDMCP) undertaken by the Energy Efficiency, Demand Management and Conservation (EDMAC) Task Force of the Ministry of Power and Energy of Sri Lanka.

The topic of this feasibility study was identified jointly by EDMAC and the Sri Lanka Tyre Corporation plant management on the basis of previous analysis and a preliminary energy audit conducted by USAID specialists in December 1983 and confirmed by the results of a detailed energy audit undertaken by the same team in March 1984.

The Sri Lanka Tyre Corporation, which is located on a sizable tract of land in Kelaniya, about 10 kilometers northeast of Colombo, employs approximately 2,000 people. SLTC is engaged primarily in the manufacture of tires and tubes for automobiles, motorcycles and scooters, trucks, and agricultural vehicles.

The physical plant consists of a number of buildings, including the factory, a boiler house, a chilled water plant, and a number of workshops, administrative office buildings, and employee service buildings.

The factory was built with support from the USSR; hence, most of the equipment in the plant is of Soviet or East European manufacture. The original design envisioned about 550 employees; at present, some 2,000 are employed. Since the original construction in the late 1960s, additional manufacturing capacity has been provided. The plant operates three shifts, 250 days a year.

The 1983 energy bill, including electricity demand charge, reached almost Rs.50 million, up from roughly Rs.13 million in 1979, representing almost one-fifth of total production costs.

The plant uses large amounts of oil (roughly $20m^3$/day) and electricity (roughly 1 GWh/month). The oil is mainly furnace oil, which is burned in three Russian-made boilers, each with a capacity of 6.5 tonnes of steam per hour. Two boilers run continuously, and the third one is used for back-up.

Part of the generated steam is used directly, and part is used to produce superheated water via a heat exchanger. Superheated water is used in the vulcanization process. Some of the steam is used directly for vulcanization, while the remainder is used by the extruders and calenders.

The steam generating plant efficiency is very low, at an estimated 54 percent. According to the energy audit conducted in March 1984, this low efficiency results from a variety of reasons, including:

- Burners are worn out and their parts are in physically poor condition
- Air/fuel ratio control is carried out manually and proper adjustment is made virtually impossible owing to burner conditions
- Poor insulation of boiler walls leading to excessive radiation losses
- Excessive blowdown due to lack of monitoring of solid contents in the feedwater
- Air in leakage to economizers leading to lowered efficiency of this equipment
- Inefficient and excessive soot blowing due to poor combustion conditions
- Numerous steam leaks and leaking valves in and around the boiler
- Combustion chamber relief vent permanently opened due to overpressurization caused by poor combustion and uneven firing
- Absence of reliable instrumentation.

Because of this multitude of causes for low efficiency, it has been found that it would not be cost effective to try to modify the boiler to increase its efficiency to a satisfactory level of 75-80 percent. Because the boiler is almost 20 years old, it has reached the end of its useful life. Visual inspection of the inside of the boiler has indeed revealed that the tubing and general furnace conditions were such that it was clear the boilers would not be able to sustain continuous operation for a much longer period. In addition, according to the experts who inspected the boiler, the compliance of this boiler plant with the Factories Ordinance of Sri Lanka will not be ensured in the near future.

As a consequence, both SLTC management, BF Goodrich, and the USAID/EDMAC team agreed that replacement was the only viable solution for the boilers.

Therefore, this feasibility addresses the selection of the best option for a new steam generating plant to replace the existing one.

Basis for Analysis

In studying the replacement project, it is important to first determine the size of the boiler(s) that will be needed to supply steam to the process in the future.

Plant output is expected to rise to 250,000 STs by 1988-1989 -- a 25-percent capacity increase. Based on discussions with plant management, both the planned SLTC modernization and implementation of the plant audit recommendations should result in steam savings on the same order of magnitude as the production capacity increase. Therefore, the feasibility study has been based on current steam flow characteristics: 9.5 tonnes of steam per hour (tsh) at 16 bar for maximum demand, and 7 tsh for average load. For cost evaluation and tender documents, a design capacity of 10 tsh has been retained.

Technical Options

Together with SLTC and EDMAC, we identified five options for the study:

- Option 1: new oil-fired packaged boiler
- Option 2: new multifuel (wood/oil) boiler
- Option 3: new multifuel (wood/oil) boiler/back pressure steam turbine
- Option 4: new multifuel (wood/oil) boiler/extraction condensing steam turbine
- Option 5: new multifuel (coal/oil) boiler (stoker or fluidized-bed).

Total project costs vary from Rs.13 million for option 1 (of which Rs.4.8 million correspond to the CIF value of the boiler) to Rs.64 million for the multi-fuel boiler with extraction condensing steam turbine and electric generator (of which Rs.12.3 million for the boiler alone) (see Exhibit A). These investment figures are conservative estimates as they have been based on highest quality equipment imported from the United States and Europe. They also include duties and large provisions for contingency.

Total annual operating costs range from a low Rs.76,000/quarter for option 1 to Rs.1.66 million/quarter for option 4. These quarterly O&M costs are incremental costs relative to current operation of existing boilers (see Exhibit B).

Other critical assumptions are presented in Exhibit C.

Based on extensive discussions with competent organizations, it has been established that sufficient quantities of wood (14,000-28,000 metric tonnes

Exhibit A

Sri Lanka Tyre Corporation: Capital Outlays for the Five Project Options
(Values in current Rs. (000); installation begins
third quarter 1984 and occurs over 4 to 6 quarters)

Cost element	Project options[1]				
	Option #1	Option #2	Option #3	Option #4	Option #5
Boiler system					
Equipment (CIF, Colombo)					
Boiler	4,842	7,984	11,589	12,336	7,984
Water treatment	708	720	720	1,788	720
Fuel handling and storage	0	3,398	3,756	5,497	3,398
Stack	804	1,014	1,022	1,016	1,014
Other	804	1,014	1,104	1,016	1,014
Total equipment (CIF, Colombo)	7,158	14,130	18,191	21,653	14,130
Installation					
Boiler	804	4,787	5,365	6,986	4,787
Building	603	811	1,022	1,524	811
Foundation	402	1,014	1,533	2,032	1,014
Other	502	1,105	1,104	508	1,105
Total installation	2,311	7,717	9,024	11,050	7,717
Contingency on boiler system	2,310	4,218	5,365	6,097	4,218
Engineering/design for boiler system	1,228	5,527*	6,860*	7,959*	5,416*
Total cost for boiler system	13,007	31,592	39,440	46,759	31,481
Turbine/generating system					
Equipment (CIF, Colombo)					
Turbines/generator	N/A	N/A	848	10,283	N/A
Controls & switchgear	N/A	N/A	245	1,030	N/A
Other	N/A	N/A	110	515	N/A
Total equipment (CIF, Colombo)	N/A	N/A	1,203	11,828	N/A
Installation					
Turbine/generator	N/A	N/A	291	2,159	N/A
Building	N/A	N/A	102	310	N/A
Foundation	N/A	N/A	72	310	N/A
Other	N/A	N/A	0	306	N/A
Total installation	N/A	N/A	465	3,005	N/A
Contingency on turbine/generating system	N/A	N/A	129	750	N/A
Engineering/design for turbine/generating system	N/A	N/A	125	1,500	N/A
Total cost of turbine/generating system	N/A	N/A	3,460	17,163	N/A
TOTAL PROJECT COST	13,007	31,592	42,900	63,922	31,481

[1]Option 1: new oil-fired boiler
Option 2: new multifuel boiler burning wood and oil
Option 3: new multifuel boiler burning wood and oil with cogeneration (backpressured turbine)
Option 4: new multifuel boiler burning wood and oil with cogeneration (condensing turbine)
Option 5: new multifuel boiler burning coal and oil.

*Includes system start-up and testing cost.

Exhibit B

Sri Lanka Tyre Corporation: Operating and Maintenance Expense for the Five Project Options
(Values in Current Rs (000))

Cost element	Project options[1]				
	Option #1	Option #2	Option #3	Option #4	Option #5
Operations begin	4Q/1985	1Q/1986	1Q/1986	1Q/1986	1Q/1986
Operating & maintenance expense for first operating period					
Labor	11	86	113	113	86
Electricity	0	576	576	576	576
Water and chemicals	0	68	68	68	68
Spare parts	65	247	356	586	247
Other	0	158	215	320	158
Total	**76**	**1,135**	**1,328**	**1,663**	**1,541**
Total operating and maintenance expense for subsequent time periods					
First quarter 1987	322	1,707	1,862	2,114	1,707
First quarter 1988	354	1,891	2,062	2,341	1,891
First quarter 1989	390	2,094	2,284	2,593	2,094
First quarter 1990	429	2,320	2,530	2,872	2,320
First quarter 1991	472	2,570	2,802	3,262	2,570
First quarter 1992	519	2,847	3,103	3,522	2,847
First quarter 1993	571	3,153	3,436	3,901	3,153
First quarter 1994	628	3,493	3,806	4,320	3,493

[1]Option 1: new oil-fired boiler
Option 2: new multifuel boiler burning wood and oil
Option 3: new multifuel boiler burning wood and oil with cogeneration (backpressured turbine)
Option 4: new multifuel boiler burning wood and oil with cogeneration (condensing turbine)
Option 5: new multifuel boiler burning coal and oil.

Exhibit C

Critical Study Assumptions

1. Boiler Characteristics

Size: 10 metric tonnes of steam/hour
Pressure: 16 bar
Efficiency on oil: 80 percent
Efficiency on coal: 75 percent
Efficiency on wood: 72 percent
Useful life: 25 years

2. Energy Prices

Market prices

Oil: Rs.4,922/metric tonne in 1984, increasing at 2 percent per year in real terms
Coal: Rs.1,470/metric tonne in 1984, increasing at 1 percent per year in real terms
Wood: Rs.600/metric tonne in 1984, constant
Electricity: Rs.2/kWh (total cost) in 1984, increasing at 2 percent per year in real terms

Opportunity costs (shadow prices)

Oil: Rs.3,602/metric tonne in 1984, increasing at 2 percent per year in real terms
Coal: Rs.1,347.5/metric tonne in 1984, increasing at 1 percent per year in real terms
Wood: Rs.500/metric tonne between 1984 and 1990 and Rs.700/metric tonne after 1990
Electricity: Rs.3.5/kWh (total cost) over the period 1984-2000

3. Financial Data

Debt/equity ratio:	60/40
Interest rate:	14%/year
Moratorium on principal repayment:	1 year
Marginal SLTC tax rate:	50 percent
Debt repayment period:	10 years
Depreciation:	50 percent during 4 years and 50 percent during 8 years, straight line
Discount rate:	20 percent nominal, after tax (SLTC); 10 percent real (economic)

SOURCE: Hagler, Bailly & Company.

annually depending on the option) will be available from Mahaweli clearings between 1986 (beginning of operation) and 1990-1992. For the 1990s, SLTC will have to develop or participate in the development of dedicated wood plantations, as it is recommended and strongly supported by the Sri Lankan government.

With respect to coal, for which small quantities will be required (less than 5,000 tonnes annually), it is envisioned to transport coal from Trincomalee (where a new coal-fired power plant will start operation by 1989) to Colombo by rail.

EVALUATING THE TECHNICAL OPTIONS

To evaluate the five technical options, we conducted financial and economic analyses of their expected performance. The financial analyses were conducted from the perspective of SLTC and are intended to assist SLTC's management in deciding which, if any, of the five technical options to implement. The economic analyses were conducted from the perspective of the Sri Lankan economy and encompassed two separate analyses: an evaluation of the costs and benefits to Sri Lankan society of undertaking the efficiency improvements and an analysis of the options' foreign currency requirements. The economic analyses are intended to assist the Sri Lankan government in determining the overall social merit of the alternative technical options and deciding whether an option(s) that may be preferred on the basis of its (their) financial performance may also be expected to meet society's project criteria.

Findings from the Financial Analyses

To perform the financial analyses, we projected the incremental after-tax cash flows to SLTC from undertaking each project. These projections were based on the expected technical performance of the project options and incorporated detailed information on the timing and level of the cash outlays required to undertake each option and the subsequent cash returns and expenses associated with project operation. The analyses incorporated relevant provisions of the Sri Lankan tax code and reflected the expected structure and terms of financing for the options.

On the basis of the projected cash flows, we calculated the following measures of financial performance: present value of after-tax cash flows at a discount rate of 20 percent; internal rate of return (i.e., the discount rate at which the present value of project after-tax cash flows equals zero); and the simple payback period (i.e., the length of time required for the cumulative cash flow from a project to become positive). In addition to calculating such measures on the basis of expected project performance, we also conducted analyses in which important factors influencing project performance -- namely project capital cost, value of energy savings, and cost of debt financing -- were varied from their expected levels.

17

As the result of these financial analyses, we found that options no. 2 (multifuel boiler burning wood and oil) and no. 5 (multifuel boiler burning coal and oil) could be expected to achieve the highest present value of after-tax cash flow (see Exhibit D). Specifically, for the expected case analysis, the present value of cash flow for option no. 5 is Rs.24.3 million (current Rs. escalated at 10 percent per annum general inflation; present value of cash flow analyzed over a period of 10 years from the initiation of project capital outlays) and for option no. 2, Rs.21.3 million. The present value of cash flow for the remaining three projects ranges from Rs.12.7 million for option no. 4 to Rs.20.1 million for option no. 3.

With regard to internal rate of return, option no. 1 achieves the highest performance at 98.1 percent, followed by option no. 5 at 68.9 percent and option no. 2 at 63.7 percent. Similarly, option no. 1 is the first project to achieve a positive balance of cumulative cash flow; that is, in nine quarters from the beginning of cash outlays. Options no. 5 and no. 2 achieve payback in 11 and 12 quarters, respectively. These findings with regard to the relative performance of the alternative options do not vary significantly for the non-expected case analyses. Thus, while option no. 1 achieves the highest return per rupee invested, options no. 2 and no. 5 may be expected to achieve a higher overall increase in the net worth of the firm and a greater return. Accordingly, on the basis of expected financial performance alone, we recommend that SLTC consider installation of a multifuel boiler capable of burning coal and oil or wood and oil, depending on the price and availability of the fuels.

Findings from the Economic Analyses

In the economic analyses of the five technical options, we evaluated the expected costs and benefits to Sri Lankan society from each of the five options. This analysis was conducted according to traditional principles of social cost/benefit analysis and accounted for differences in the market perception of the costs and prices of goods and services and their social value to the Sri Lankan economy. To provide a basis for comparing the performance of the technical options, we calculated such measures as the present value of net social benefits and the ratio of operating period net benefits to development period costs (benefit/cost ratio). In addition, we estimated the foreign currency effects of the five technical options. In general, the projects all involve a substantial requirement for foreign currency during the project development phase but, by reducing oil imports, achieve a larger displacement of the need for foreign currency during the operating phase. The evaluation measures computed for the foreign currency analysis included the present value of net foreign currency requirements for each project and the ratio of operating period reduction in foreign currency use to the development period need for foreign currency.

On the basis of our social cost/benefit analysis of the five project options, we found that options no. 4 and no. 2 could be expected to achieve the highest present value of net benefits to society, at Rs.33.6 million and

Exhibit D

SRI LANKA TYRE CORPORATION: SUMMARY RESULTS OF FINANCIAL AND ECONOMIC ANALYSES FOR THE FIVE PROJECT OPTIONS

PROJECT OPTIONS	OPTION #1 New oil fired boiler	OPTION #2 New multi-fuel boiler burning wood and oil	OPTION #3 New multi-fuel boiler burning wood and oil with cogeneration (back-pressured turbine)	OPTION #4 New multi-fuel boiler burning wood and oil with cogeneration (condensing turbine)	OPTION #5 New multi-fuel boiler burning coal and oil
FINANCIAL ANALYSIS RESULTS: Monetary Values In Current Rs(000) (i.e., values include general inflation at 10% p.a.)					
DEVELOPMENT BEGINS	3q/1984	3q/1984	3q/1984	3q/1984	3q/1984
OPERATIONS BEGIN	4q/1985	1q/1986	1q/1986	1q/1986	1q/1986
TOTAL DEVELOPMENT PERIOD OUTLAY	13782	33797	45766	68796	33686
DEBT REQUIRED	8269	20278	27460	41278	20212
EQUITY CONTRIBUTED	5513	13519	18307	27518	13474
PRESENT VALUE OF CASH FLOW AT 20%	18973	21344	20095	12655	24296
INTERNAL RATE OF RETURN ON CASH FLOW	98.1%	63.7%	53.1%	35.3%	68.9%
NUMBER OF QUARTERS TO SIMPLE PAYBACK	9	12	13	16	11
SOCIAL COST/BENEFIT ANALYSIS RESULTS: Monetary Values In Constant Rs(000) at mid 1984					
TOTAL DEVELOPMENT PERIOD COSTS	12361	29933	38442	55187	29933
TOTAL OPERATING PERIOD BENEFITS	58277	102585	76246	141383	58665
NET BENEFITS/NET COSTS	4.71	3.43	1.98	2.56	1.96
PRESENT VALUE OF NET BENEFITS AT 10%	23059	32601	9565	33634	5626
FOREIGN CURRENCY ANALYSIS RESULTS: Monetary Values In Current Rs(000) (i.e., values include inflation at 10% p.a.)					
FOREIGN CURRENCY REQUIRED IN DEVELOPMENT PERIOD	7764	22159	34549	45456	22078
FOREIGN CURRENCY SAVED IN OPERATING PERIOD	119793	292456	311464	372370	192875
FOREIGN CURRENCY SAVINGS/REQUIREMENT	15.43	13.20	9.02	8.19	8.74
PRESENT VALUE OF FOREIGN CURRENCY REQUIREMENT AT 10%	-60247	-142523	-140899	-163898	-86193

SOURCE: Hagler, Bailly & Co.

Rs.32.6 million, respectively (present value of net social benefits evaluated in constant Rupees as of mid-1984 and discounted at 10 percent). However, option no. 1 achieves the highest ratio of operating net benefits to development period costs (4.71) and thus would be expected to achieve the highest social return per Rupee invested. Option no. 1 is followed by option no. 2 at a ratio of 3.43 and option no. 4 at 2.56 (see Exhibit D).

The foreign currency analysis indicates that option no. 4 would be expected to achieve the highest present value of net displacement in foreign currency requirements at Rs.164 million (present value of net reduction in foreign currency requirements measured in current Rupees and discounted at 10 percent) followed by option no. 2 at Rs.143 million and option no. 3 at 141 million. With regard to the ratio of foreign currency savings during operations to foreign currency needs during development, option no. 1 achieves the highest performance with a ratio of 15.4 followed by option no. 2 at 13.2. Thus, option no. 1 again achieves the highest return per Rupee invested; however, the magnitude of net benefits from option no. 1 is considerably less than for the remaining options as it achieves a present value of net foreign currency savings of only Rs.60.2 million or less than half the savings achieved by options no. 2, no. 3, and no. 4.

On the basis of the social cost/benefit and foreign currency requirements analysis, we conclude that options no. 2 and no. 4 would be expected to achieve higher benefits to the Sri Lankan economy than the other options analyzed.

Composite Evaluation and Recommendation

On the basis of our financial and economic analyses, we found that options no. 2 and no. 5 would be expected to achieve the highest financial benefits to SLTC, while options no. 2 and no. 4 would be expected to achieve the highest net social and foreign currency benefits to the Sri Lankan economy. On balance, therefore, we concluded that option no. 2 would best satisfy both the financial and economic criteria for project selection. Accordingly, we recommend that SLTC and the Sri Lankan government support the installation of a multifuel boiler at the Kelaniya plant of SLTC (see Exhibit E). Since the multifuel boiler will be capable of burning a variety of fuels, including wood, coal, and oil, we recommend that no firm commitment to a specific fuel or fuel mix be made at this time. Rather, actual fuel usage should depend on the price and availability of specific fuels prevailing at the time of boiler operations.

Introduction

The Sri Lanka Tyre Corporation (SLTC) was established in 1962 under the name of Ceylon Tyre Corporation. This project, which was undertaken in connection with the 1958 Economic and Technical Cooperation Agreement between Ceylon and the Soviet Union, consisted of two phases. In Phase I, the plant was to achieve an annual production capacity of 250,000 tires. In Phase II, production capacity was to be expanded to 350,000 tires per year.

Phase I was completed in 1967 with the commissioning of the plant at a capacity of 250,000 tires per year, and plans are under way to expand output capacity and modernize the plant.

In connection with the support provided by USAID, a preliminary and a detailed energy audit have been conducted at SLTC. As a result of these audits, the generation, distribution, and use of steam were found to represent opportunities for substantial energy savings. This potential was corroborated by SLTC plant management and overseas consultants specializing in tire manufacturing, such as B. F. Goodrich U.S.A, which assisted the corporation in defining its expansion/modernization project. As a result, SLTC management and the Ministry of Industry welcomed the opportunity offered by EDMAC and USAID to conduct a detailed study of the feasibility of rehabilitating the steam system. The report on this study addresses several alternatives for achieving more efficient steam generation and improving the steam distribution and utilization system.

In the following sections, we discuss plant operation, the corporation's financial situation, production, energy use, and the plant's future. These sections provide the context for project options and their evaluation.

PLANT AND PROCESS DESCRIPTION

The Sri Lanka Tyre Corporation, which is located on a sizable tract of land in Kelaniya, about 10 kilometers northeast of Colombo, employs approximately 2,000 people. SLTC is engaged primarily in the manufacture of tires and tubes for automobiles, motorcycles and scooters, trucks, and agricultural vehicles. The production process is summarized in Exhibit 1.

Raw materials, in the form of natural and synthetic rubbers, are received, graded, and stored. The rubber is selected for manufacture into tires based on the requirements of the particular tire and the properties of the rubber. In a sequence of mixing and milling steps, the rubber is plasticized and mixed with chemicals and additives, chiefly carbon black and sulfur.

Exhibit 1

Tyre Production Line

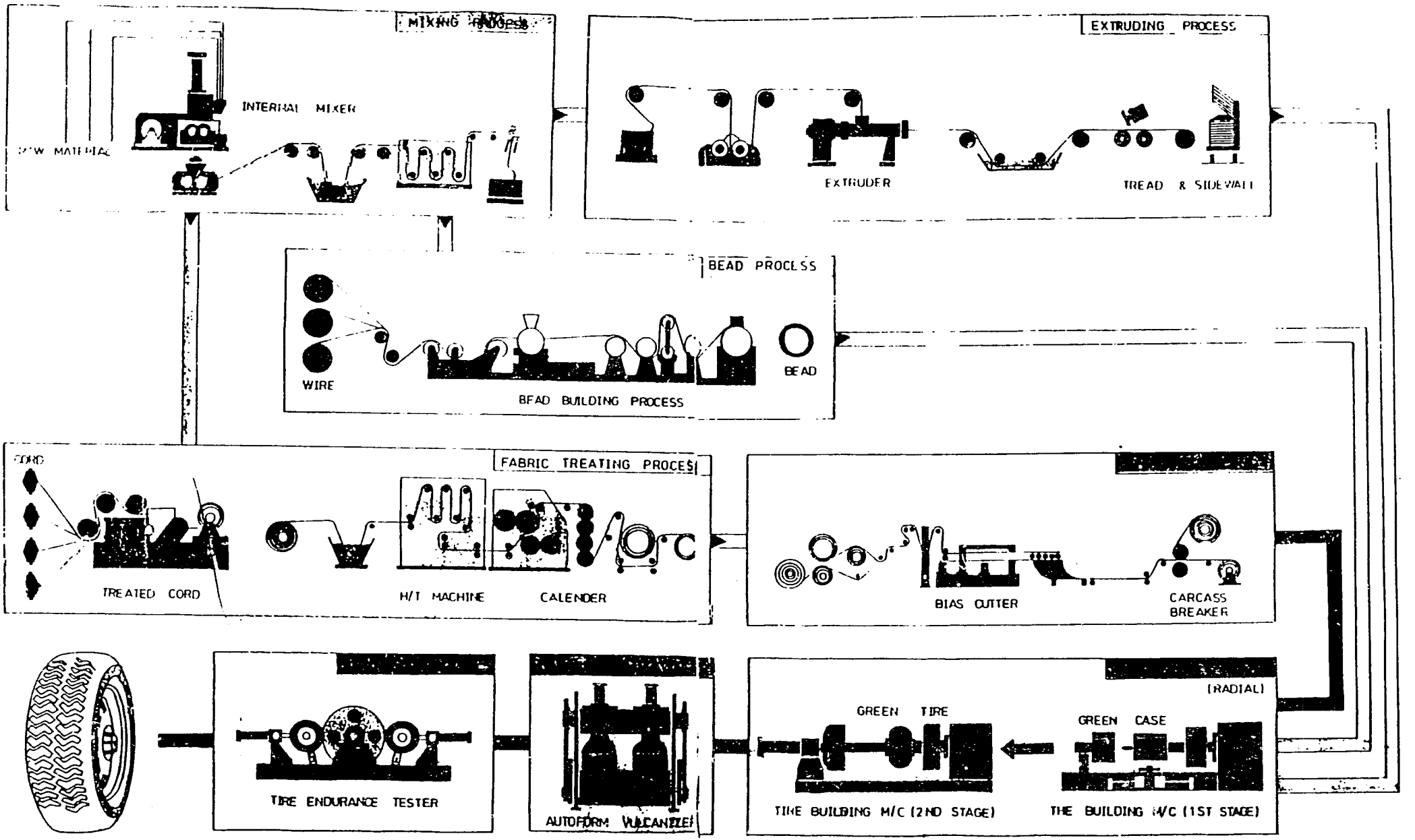

SOURCE: Sri Lanka Tyre Corporation.

The mills, which consist of rotating cylinders that operate at different speeds, process the rubber purely by mechanical means that generates heat. The mills are cooled using chilled water to prevent unwanted chemical reactions and scorching. The rubber is then cooled and dried in a festooner dryer.

In an extrusion step, the rubber is again milled and formed into the tread and sidewall shapes. A portion of the rubber is sent to a calendering operation, where it is bonded mechanically to nylon fabric to form the cord. Another portion of the rubber is bonded mechanically to copper-coated steel wire to form the bead.

In the tire building step, the cord, sidewalls, tread, and bead are assembled into a "carcass" (or "green tire") that bears little resemblance to the finished tire. This step is very labor-intensive, and operators need considerable training to assemble the components.

The last manufacturing step is vulcanization. Two types of machines are used in this process. The first type uses a curing bag, a thick-walled rubber tube that resembles an inner tube and is inserted inside the tire. Using pneumatic presses, the carcass is formed into a shape resembling the final tire. From this point, the carcass is placed in a vulcanizer. The vulcanizer contains a mold with the tire tread and sidewall patterns. Under high temperatures, the tire is formed by melting the rubber into its final form; the chemical reaction between rubber and sulfur occurs, imparting the desired strength, flexibility, and durability to the tire. Steam and superheated hot water are used to provide heat to this process.

Alternatively, a second type of machine called a Bag-o-Matic machine is used; it requires no preliminary forming step and does not use the curing bag. The Bag-o-Matic machine is slightly less energy-intensive than the vulcanizer with curing bag.

In the final step in the manufacturing process -- quality control -- tires are inspected and tested. The finished tires are then stored in a warehouse area prior to shipment.

The manufacture of tubes follows a similar sequence to that for tires, except that additional extrusion steps take place and a separate type of vulcanization machine is used.

The physical plant consists of a number of buildings including the factory, a boiler house, a chilled water plant, and a number of workshops, administrative office buildings, and employee service buildings.

The factory was built with support from the USSR; hence, most of the equipment in the plant is of Soviet or East European manufacture. The original design envisioned about 550 employees; at present, some 2,000 are employed. Since the original construction in the late 1960s, additional manufacturing capacity has been provided. The plant operates three shifts,

250 days a year. Currently, SLTC is participating in a technical assistance program with B. F. Goodrich, at an annual cost of Rs.12 million (see Appendix F).

FINANCIAL STATUS

By widely accepted financial standards, SLTC is in good financial health. As of December 31, 1983, the balance sheet contained no long-term liabilities and presented fixed assets of Rs.73.1 million (after depreciation). In addition, the firm has a net current asset position of Rs.104.2 million, for an asset-liability ratio of 2.7. Accordingly, the firm has considerable liquidity, particularly by Sri Lankan standards. On the basis of the quality of the balance sheet, SLTC should have no difficulty supporting substantial debt financing for economically advantageous energy conservation investments.

SLTC's recent financial performance has been somewhat inconsistent. SLTC realized net profits, after-tax and before repatriations to the general and special reserves, of Rs.24.9 million in 1982 and Rs. 15.3 million in 1981 on revenues (after the percent turnover tax) of Rs.267.6 million and Rs.232.4 million, respectively. However, in 1983, despite the fact that revenues rose to Rs.286.3 million, SLTC realized only a small profit before tax of Rs.329,000. After provision for income tax, the firm incurred a loss of Rs.1.2 million. Several factors appear to underlie this decline in performance:

- The total volume of factory-produced tire sales, as measured in equivalent standard tires, fell from 177,389 in 1982 to 150,710 in 1983; revenues from factory production fell by Rs.12.5 million

- Although factory produced sales declined, a total factory production (as measured by equivalent standard tires) actually rose from 165,995 in 1982 to 169,216 in 1983, leading to increased inventories and substantial production costs that were not associated with tire sales

- Net sales of imported tires and products rose from Rs.3.9 million to Rs.13.8 million, offsetting the revenue decline on factory-produced sales; however, SLTC actually incurred a loss of Rs.1.2 million on these sales

- Total operating costs increased substantially from Rs.221.0 million in 1982 to Rs.284.9 million in 1983; important components of this increase were in raw materials, Rs.45.0 million; energy costs, Rs.4.2 million; personnel, Rs.5.0 million; and interest charges, Rs.5.3 million.

Although SLTC achieved poor earnings performance in 1983, the firm still generated cash from operations of Rs.11.7 million. However, this value

is considerably less than the Rs.64.5 million and Rs.21.4 million generated in 1982 and 1981, respectively.

Despite the recently weak earnings performance, we anticipate that SLTC should have no difficulty obtaining substantial funding for quality energy efficiency improvements projects. The strength of the firm's balance sheet, together with the financial quality of the potential projects, should provide a solid basis for obtaining reduced debt.

PRODUCTION AND MARKETS

SLTC manufactures a wide variety of tire products, including tires for scooters, motorcycles, cars and jeeps, trucks, and agricultural vehicles; tubes for these tires; and flaps and carpet. All products are accounted for in one common unit called a **standard tire (ST)** weighing 33 kg. During the past 3 years, production has risen from 155,951 ST in 1981 to 165,387 ST in 1982 and 170,444 ST in 1983 (see Exhibits 2, 3, and 4 for details).

Of the 22 types of tires currently manufactured at SLTC (see Exhibit 5), truck tires account for about 40 percent of production. Most truck tires have traditionally been sold to the publicly owned Ceylon Transportation Board (CTB). However, the quality of CTB's management has been deteriorating, giving rise to serious market uncertainties. In addition, heavy and long-distance transportation has declined recently by an estimated 20 to 30 percent compared with 1983 levels. SLTC thus considers it vital to diversify and further penetrate new market segments, mainly those for light truck and motorcycle tires. These market segments are supplied at present primarily by imported new and used tires that are priced below SLTC's tires, despite substantial duties (50 percent of CIF value, which is to rise to 100 percent).

Current production costs at SLTC stand at Rs.1,847 for a 9.00-20,12 PR truck tire; the corresponding selling price is Rs.2,700, before discount to dealers. Of the Rs.1,847, Rs.1,155 is allocated for raw materials, Rs.42 for labor, Rs.292.28 for variable overheads, and Rs.357.22 for fixed overhead (plant investment mostly depreciated). Energy costs account for Rs.263 (or 14 percent of total production cost), with Rs.142 for electricity and Rs.121 for furnace oil (per truck tire).*

ENERGY USE

The plant uses large amounts of oil (roughly $20m^3$/day) and electricity (roughly 1 GWh/month) (see Exhibits 6, 7, and 8). The oil is mainly furnace oil, which is burned in three Russian-made boilers, each with a capacity

*Source: SLTC.

25

Exhibit 2

Production, 1981
(units)

	Tires						Tubes						
Month	Scooter & motorcycle	Car & jeep	Truck	Agri-culture	Total	Bear-cat	Car tube	Truck	Agri-culture	Total	Flaps	Carpet	Standard tires
January	--	9,907	8,955	1,939	20,801	--	5,529	4,817	108	10,454	1,959	446	14,963
February	--	8,857	7,994	1,615	18,446	--	5,413	7,264	--	12,677	1,800	509	13,297
March	--	8,222	7,646	1,903	17,771	--	3,542	6,052	857	10,451	1,529	298	13,208
April	--	2,432	2,519	1,040	5,991	21	1,913	1,924	69	3,906	837	79	4,759
May	--	5,813	5,468	1,639	13,020	100	5,187	7,027	315	12,529	1,599	286	10,214
June	--	6,577	5,103	1,715	13,469	74	5,541	7,315	155	13,011	1,400	--	9,963
July	--	7,464	7,923	3,634	19,287	266	5,016	11,077	645	16,738	1,647	--	14,860
August	15	7,976	7,510	2,227	17,921	193	4,926	8,948	94	13,968	1,511	23	13,722
September	81	9,070	9,532	2,816	21,671	172	8,399	5,155	774	14,328	1,436	113	16,600
October	36	7,953	8,800	2,810	19,879	280	5,624	6,162	--	11,786	2,044	--	15,558
November	294	7,253	8,822	2,861	19,417	187	5,460	6,694	120	12,274	1,625	--	14,582
December	118	7,876	7,934	2,525	18,579	126	5,132	7,477	44	12,653	2,132	--	14,225
Total	**544**	**89,400**	**88,206**	**26,724**	**206,272**	**1,419**	**61,682**	**79,912**	**3,181**	**144,775**	**19,519**	**1,754**	**155,951**

SOURCE: Sri Lanka Tyre Corporation.

Exhibit 3

Production, 1982
(units)

Month	Tires					Bear-cat	Tubes				Flaps	Carpet	Standard tires
	Scooter & motorcycle	Car & jeep	Truck	Agri-culture	Total		Car tube	Truck	Agri-culture	Total			
January	147	7,962	8,294	2,484	18,887	245	4,382	4,551	464	9,397	2,091	--	13,709
February	596	7,505	8,283	1,775	18,159	326	3,421	7,712	846	11,979	1,782	--	13,665
March	51	11,170	9,504	2,598	23,323	498	5,276	11,081	59	16,416	1,774	--	17,188
April	--	1,712	1,647	414	3,773	66	--	1,583	--	1,583	419	--	5,321
May	--	5,920	7,346	1,533	14,799	--	2,990	7,929	--	10,919	852	--	11,788
June	462	11,200	10,710	2,226	24,598	--	8,062	10,277	184	18,523	1,446	--	18,060
July	368	11,171	11,299	2,590	25,428	214	11,623	3,923	--	15,546	2,832	--	17,693
August	216	10,306	10,253	2,477	23,252	254	8,956	8,150	--	17,106	2,175	--	17,265
September	99	4,373	5,101	1,623	11,196	254	4,499	9,591	29	14,119	1,290	--	9,464
October	123	7,273	7,336	2,231	16,963	220	6,549	9,990	103	16,642	1,204	--	13,549
November	286	8,495	8,537	3,275	20,593	468	5,148	8,652	--	13,800	1,570	--	15,348
December	239	6,315	7,211	2,490	16,255	182	7,966	5,747	1,118	14,831	1,333	--	12,337
Total	**2,587**	**93,402**	**95,521**	**25,716**	**217,226**	**2,727**	**68,872**	**89,186**	**2,803**	**160,861**	**18,768**	—	**165,387**

SOURCE: Sri Lanka Tyre Corporation.

Exhibit 4

Production, 1983
(units)

Month	Tires					Bear-cat	Tubes				Flaps	Carpet	Standard tires
	Scooter & motorcycle	Car & jeep	Truck	Agri-culture	Total		Car tube	Truck	Agri-culture	Total			
January	236	8,542	7,925	1,880	18,583	253	5,327	8,462	52	13,841	1,419	--	13,979
February	322	7,771	7,842	2,652	18,587	377	3,839	8,574	50	12,463	1,763	--	13,887
March	518	9,108	10,490	4,792	24,908	--	5,592	13,381	--	18,973	2,082	--	1[illegible],607
April	60	3,200	3,507	1,085	7,852	--	--	3,040	--	3,040	810	--	5,916
May	368	4,828	5,559	1,623	12,378	22	3,507	1,989	--	5,496	508	--	9,421
June	406	7,047	9,018	2,407	18,878	02	5,937	6,580	--	12,517	3,169	--	15,285
July	320	6,846	7,005	2,497	16,668	--	5,467	7,708	453	13,628	3,888	--	12,574
August	82	10,079	8,827	2,192	21,280	57	14,642	7,158	336	22,136	2,498	--	16,003
September	386	11,815	9,739	1,050	22,990	76	3,776	6,610	862	11,248	1,433	--	16,586
October	134	10,452	8,734	1,394	20,714	70	7,183	7,659	288	15,130	1,462	--	15,056
November	508	12,103	10,136	1,364	24,111	125	10,215	7,338	119	17,672	2,270	--	17,261
December	328	8,217	8,696	2,655	19,896	117	4,737	8,086	48	12,871	1,244	--	14,869
Total	**3,668**	**99,948**	**97,478**	**25,591**	**226,685**	**1,117**	**70,622**	**86,675**	**2,208**	**159,505**	**22,546**	—	**170,444**

SOURCE: Sri Lanka Tyre Corporation.

Exhibit 5

Range of Tires, Tubes, and Flaps
and Production Capacity, 1984

	Capacity (units/ year as of March 1984)
Tires	
a. Car tires: 5.20-13; 5.60-13; 5.90-13; 5.20-14; 5.60/5.90-14; 5.60-15; 5.50/5.90-13; 6.40-15;5.25-16	100,000
b. Jeep tires and tractor front tires	30,000
c. Light truck tires: 7.00-20; 7.50-20	30,000
d. Truck tires: 8.25-20; 9.00-20	68,000
e. Tractor rear tires: 11:00-28	3,500
Tubes	
Car tubes, jeep and tractor front tubes	74,000
Light truck tubes, truck tubes	90,000
Tractor rear tubes	9,000
Flaps	
Flaps for 7.50-20; 8.25-20; 9.00-20 tires	96,000

SOURCE: Sri Lanka Tyre Corporation.

Energy Consumption, 1981

	Electricity						Fuel	
	Factory			Water treatment plant				
Month	kWh	kVA	Rs.	kWh	kVA	Rs.	Furnace oil (Imperial gallons)	Diesel (Imperial gallons)*
January	1,000,000	3,200	1,084,000.0	53,080	105	56,451.60	104,623.0	24
February	1,039,220	3,200	1,373,417.2	50,250	105	65,625.00	91,408.0	177
March	815,700	3,350	1,168,195.0	33,740	105	47,859.00	94,751.0	660
April	581,350	3,050	1,089,989.5	29,270	100	54,007.90	61,189.0	837
May	886,800	3,300	1,449,408.0	22,296	105	60,279.60	58,664.0	919
June	903,330	2,800	1,058,696.3	14,447	105	18,136.10	84,548.0	204
July	1,105,320	3,200	1,025,628.4	58,410	100	53,016.70	107,665.0	276
August	969,000	3,400	736,610.0	49,625	105	36,551.25	97,951.2	86
September	1,035,500	3,200	964,885.0	51,715	105	47,302.05	110,286	88
October	1,221,050	3,500	1,278,839.5	59,580	130	61,844.20	96,177	217
November	1,014,500	3,100	883,745.0	54,830	110	46,832.00	103,579.0	109
December	1,010,250	3,300	1,460,145.00	56,030	105	79,631.00	92,070.0	28
Total	**11,582,020**		**13,573,558.9**	**533,273**		**627,536.40**	**1,102,912.2**	**3,625**

*For standby generator.

SOURCE: Sri Lanka Tyre Corporation.

Exhibit 7

Energy Consumption, 1982

	Electricity						Fuel	
	Factory			Water treatment plant				
Month	kWh	kVA	Rs.	kWh	kVA	Rs.	Furnace oil (Imperial gallons)	Diesel (Imperial gallons)
January	969,350	3,300	1,956,232.50	50,680	105	101,136.00	91,453.7	58
February	996,170	3,550	1,923,876.20	47,320	100	9,215.20	92,347.0	26
March	1,069,100	3,500	2,257,378.00	51,220	100	106,996.12	123,167.0	18
April	465,230	3,250	1,134,098.94	39,645	100	93,304.21	37,741.8	45
May	829,500	3,250	1,488,422.00	46,580	100	90,215.20	78,436.0	45
June	1,100,000	3,500	1,625,400.00	63,980	100	90,614.80	107,448.0	334
July	1,100,000	3,500	1,625,400.00	58,258	100	83,439.10	115,444.0	96
August	1,050,000	3,500	1,625,400.00	49,960	95	72,449.60	96,804.4	124
September	800,000	3,500	1,625,400.00	49,960	95	72,449.60	96,804.4	20
October	775,500	3,500	1,161,846.00	48,430	100	71,021.80	103,439.6	08
November	1,180,650	3,600	1,613,269.80	56,520	100	82,215.20	107,976.0	197
December	914,800	3,500	1,313,961.60	47,680	100	70,076.80	94,424.0	146
Total	**11,250,300**		**19,350,685.00**	**608,770**		**1,002,256.20**	**1,048,549.5**	**1,126**

SOURCE: Sri Lanka Tyre Corporation.

Energy Consumption, 1983

	Electricity						Fuel	
	Factory			Water treatment plant				
Month	kWh	kVA	Rs.	kWh	kVA	Rs.	Furnace oil (Imperial gallons)*	Diesel (Imperial gallons)**
January	1,138,200	3,350	1,544,414.40	58,620	100	83,861.20	108,680.0	116
February	882,100	3,400	1,269,253.20	43,980	100	65,414.80	97,416.0	07
March	1,303,600	3,500	1,738,531.20	56,980	100	81,794.80	125,444.0	18
April	689,450	3,200	1,040,879.40	49,180	100	71,966.80	47,388.0	02
May	765,950	3,150	1,119,917.40	41,455	100	62,233.30	94,446.0	96
June	1,126,600	3,200	1,504,747.20	56,229	120	82,848.54	110,682.0	58
July	999,100	3,200	1,379,017.20	49,620	120	75,521.20	85,778.0	120
August	1,061,800	3,400	1,879,587.60	49,920	120	97,363.20	104,385.0	62
September	1,186,800	3,500	2,073,837.60	56,055	120	107,854.05	112,405.0	143
October	1,073,300	3,450	1,901,130.60	53,895	120	104,160.45	102,293.0	180
November	1,342,700	3,550	2,309,381.40	54,275	110	103,810.25	114,348.0	156
December	924,200	2,950	1,635,164.40	46,380	120	382,632.04	118,994.5	462
Total	**12,493,800**		**19,395,861.60**	**616,589**		**1,319,460.63**	**1,222,259.5**	**1,420**

*At Rs.21.2/Imperial gallon.
**At Rs.34.68/Imperial gallon.

SOURCE: Sri Lanka Tyre Corporation.

of 6.5 tonnes of steam per hour at 13-16 bar. Two boilers run continuously, and the third one is used for back-up.

Part of the generated steam is used directly, and part is used to produce superheated water via a heat exchanger. Superheated water is used in the vulcanization process. Some of the steam is used directly for vulcanization, while the remainder is used by the extruders and calenders.

Only a very small amount of low-pressure steam is used at the factory. Flash steam from some condensate tanks is used as low-pressure steam.

Electric power (33 kVA) is purchased and transformed to 6.6 kVA at the plant. Major electrical equipment includes five cooling compressors, three air compressors, rubber mills and rubber mixers which are all large energy users. Historical electricity use is shown in Exhibits 6, 7, and 8.

The 1983 energy bill, including electricity demand charge, reached almost Rs.50 million, up from roughly Rs.13 million in 1979, representing almost one-fifth of total production costs (see Exhibit 8). The price of furnace oil increased from less than Rs.1/liter in 1979 to almost Rs.5/liter in early 1984 (Rs.4,922 per tonne).

PLANT ENERGY MANAGEMENT ACTIVITIES AND ORGANIZATION

Under the current plant organization, both the chief engineer and the production manager are under the general manager (see Exhibit 9). The senior power engineer is the focal point for energy management activities, although his energy-related duties are considered a part-time activity only.

There is great interest at the plant in energy matters. Representatives from each department sit on the energy conservation committee, which includes individuals from each major energy-using section. Good, realistic programs exist on how to reduce energy costs. In addition, SLTC is collaborating with B. F. Goodrich, which regularly informs SLTC about interesting energy-saving measures. A good basis exists for continued work in the energy conservation field (e.g., in the form of excellent diagrams of the boiler and steam systems and the manufacturing processes).

Several energy-saving measures have been adopted, as illustrated by the following examples. A changeover has been effected from 800 sec fuel oil to 1,000 sec fuel oil, which has represented a saving of approximately Rs.0.5/Imperial gallon, or approximately Rs.580,000/year. Increase of chilled water temperature from 15°C to 18°C. Elimination of lighting during daytime by use of translucent sheet saving 200 kWh/day.

The old vulcanization units are gradually being replaced. Because the vulcanization time has been reduced, energy cost savings have probably been achieved, but the amount is not known.

ORGANISATION CHART - SRI LANKA TYRE CORPORATION

20 TH OCTOBER 1983

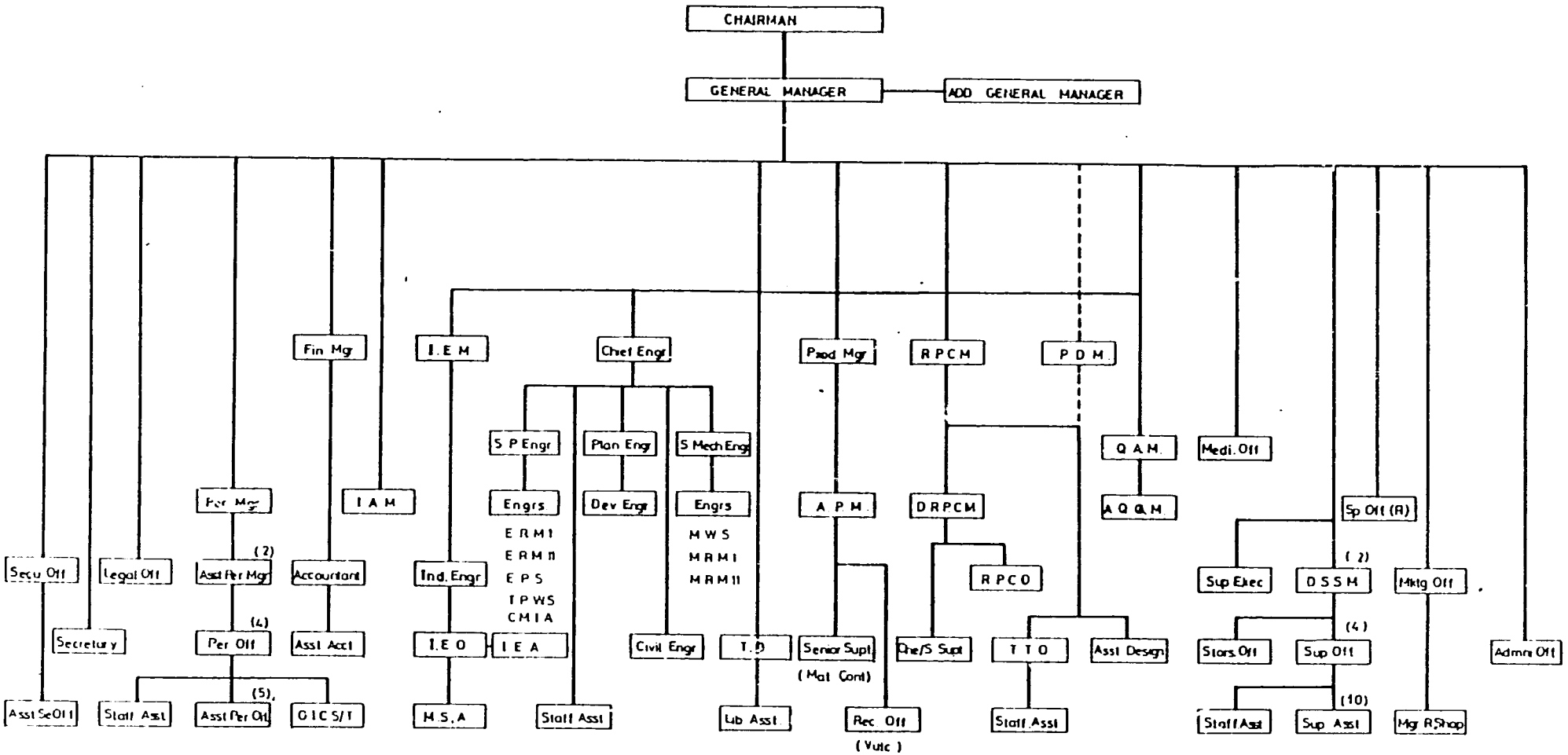

SOURCE: Sri Lanka Tyre Corporation.

PLANT FUTURE

SLTC management has taken steps to meet new challenges created by low-cost imports and deteriorating market conditions in some segments (heavy truck tires) by developing -- with the assistance of B. F. Goodrich -- a three-phase modernization and diversification program. The content, cost, and status of each phase are presented in Exhibit 10 and discussed in more detail in Appendix F.

STUDY DEFINITION AND OBJECTIVE

According to the energy audit conducted in March-April 1984, the steam generating plant efficiency is very low, at an estimated 54 percent. This low efficiency results from a variety of reasons, including:

- Burners are worn out and their parts are in physically poor condition
- Air/fuel ratio control is carried out manually and proper adjustment is made virtually impossible owing to burner conditions
- Poor insulation of boiler walls leading to excessive radiation losses
- Excessive blowdown due to lack of monitoring of solid contents in the feedwater
- Air in leakage to economizers leading to lowered efficiency of this equipment
- Inefficient and excessive soot blowing due to poor combustion conditions
- Numerous steam leaks and leaking valves in and around the boiler
- Combustion chamber relief vent permanently opened due to overpressurization caused by poor combustion and uneven firing
- Absence of reliable instrumentation.

Because of this multitude of causes for low efficiency, it has been found that it would not be cost effective to try to modify the boiler to increase its efficiency to a satisfactory level of 75-80 percent. Because the boiler is almost 20 years old, it has reached the end of its useful life. Visual inspection of the inside of the boiler has indeed revealed that the tubing and general furnace conditions were such that it was clear the boilers would not be able to sustain continuous operation for a much longer period. In addition, according to the experts who inspected the boiler, the compliance of this boiler plant with the Factories Ordinance of Sri Lanka will not be ensured in the near future.

Exhibit 10

SLTC Modernization and Expansion Program

Phase	Content	Cost (Rs., million)	Status
I	• Installation of new lines to manufacture radials and motorcycle tires • Improving services (machine, press, dryer, feeders)	10	Equipment purchased
II	• New equipment for traditional production • Building expansion • New boiler and incinerator	50-60	In negotiation with NDB
III	• Management study • New curing system • Overall plant revamping	20-30 (down from 90)	Under discussion for implementation in 1985-1986

SOURCE: Sri Lanka Tyre Corporation.

As a consequence, both SLTC management, BF Goodrich, and the USAID/ EDMAC team agreed that replacement was the only viable solution for the boilers.

Therefore, this feasibility addresses the selection of the best option for a new steam generating plant to replace the existing one.

Basis for Analysis

In studying the replacement project, it is important to first determine the size of the boiler(s) that will be needed to supply steam to the process in the future.

Plant output is expected to rise to 250,000 STs by 1988-1989 -- a 25-percent capacity increase. Based on discussions with plant management, both the planned SLTC modernization and implementation of the plant audit recommendations should result in steam savings on the same order of magnitude as the production capacity increase. Therefore, the feasibility study has been based on current steam flow characteristics: 9.5 tonnes of steam per hour (tsh) at 16 bar for maximum demand, and 7 tsh for average load.

REPORT ORGANIZATION

The feasibility study report is organized into four chapters:

Chapter 1: Technical Options
Chapter 2: Cost and Performance Assumptions
Chapter 3: Financial Analysis
Chapter 4: Economic Analysis.

The four chapters are supported by six appendices:

Appendix A: Energy Audit Report Summary
Appendix B: Detailed Results of Steam System Audit
Appendix C: Energy Prices and Availability 1984-2000
Appendix D: Tender Documents
Appendix E: Detailed Results of Financial/Economic Evaluation
Appendix F: Expansion/Modernization Program.

1 TECHNICAL OPTIONS

In this chapter, we first describe further the condition of the steam generation and distribution system. Then, we review nine technical options -- well-proven as well as new technologies -- for improving the efficiency of steam generation. These options, which were selected on the basis of the boiler audit, are:

- New oil-fired packaged boiler
- Multifuel (wood/oil) conventional boiler
- Coal-fired conventional boiler
- Multifuel fluidized-bed boiler
- Oil-fired boiler/back pressure steam turbine
- Multifuel (wood/oil) or coal conventional boiler/back pressure steam turbine
- Multifuel (wood/oil) or coal conventional boiler/extraction condensing turbine
- Thermal fluid heaters
- Gasifier.

STEAM GENERATION AND DISTRIBUTION SYSTEM DESCRIPTION

Each of the three boilers has a 6.5 tonnes/hour maximum generating capacity at 16 bar pressure, and is fitted with two burners. At present, fuel and air flow are controlled manually. The two boilers in operation and the one on standby are rotated on a regular basis.

The energy audit (see Appendices A and B) revealed extensive soot formation, indicating poor control of air/fuel ratios. The situation is aggravated by the fact that, to cope with steam demand, the operators adjust the two burners independently, without regard to optimization of air/fuel ratios. Thus, combustion efficiency measurements made with gas analyzers are not valid.

Overall efficiency, measured by relating fuel oil flows to feedwater flows, was found to be about 54 percent (see Appendix B).

The steam distribution system from the boilers to the process plant also needs major rehabilitation. The following problems were noted during the audit:

- Lack of insulation
- No condensate recovery
- Steam leaks
- Steam traps leaking steam to atmosphere.

The improved efficiency that could be achieved by fitting new burners or boilers would be negated if a comprehensive rehabilitation of the steam system were not carried out.

BOILER, STEAM DISTRIBUTION SYSTEM IMPROVEMENTS

Below, we discuss ten options for improving the energy efficiency of steam generation.

New Oil-Fired Packaged Boiler

An oil-fired packaged boiler, usually mounted on a skid, has most of the essential services, including boiler feed pumps, oil burner, burner control panel, indicating instruments, oil preheater, and other equipment (see Exhibit 1.a). The burner, which can be a new, efficient low excess air type, is fully automatic and self-contained, with integral induced draft fan and electronic control of fuel and air flow. The simpler systems operate on an on-off cycle, shifting between high firing rate and low firing rate. The more sophisticated systems are able to modulate between high and low fire to more precisely match steam demand. However, because the boiler steam drum acts as an accumulator of steam, the simpler type of burner would be quite adequate for SLTC's purposes.

Burner on-off control is based on burner steam pressure, sensed by means of a pressurestat. The required steam pressure can be set on the burner control panel. In modern packaged boilers, overall efficiencies of better than 80 percent can be achieved at high fire rates, especially using LEA burners. Significant fuel savings can be achieved by this measure because of the much improved efficiency (compared with the efficiency of the existing SLTC boilers).

To further improve efficiency, an economizer and air preheater can also be fitted. The economizer would increase the temperature of the boiler feedwater by using some of the sensible heat in the flue gases. The air preheater would increase the temperature of the inlet air. Blowdown losses would be strictly controlled by operating the boiler at the maximum safe level of total dissolved solids, in keeping with modern practice.

Exhibit 1.a

Oil-Fired Packaged Boiler

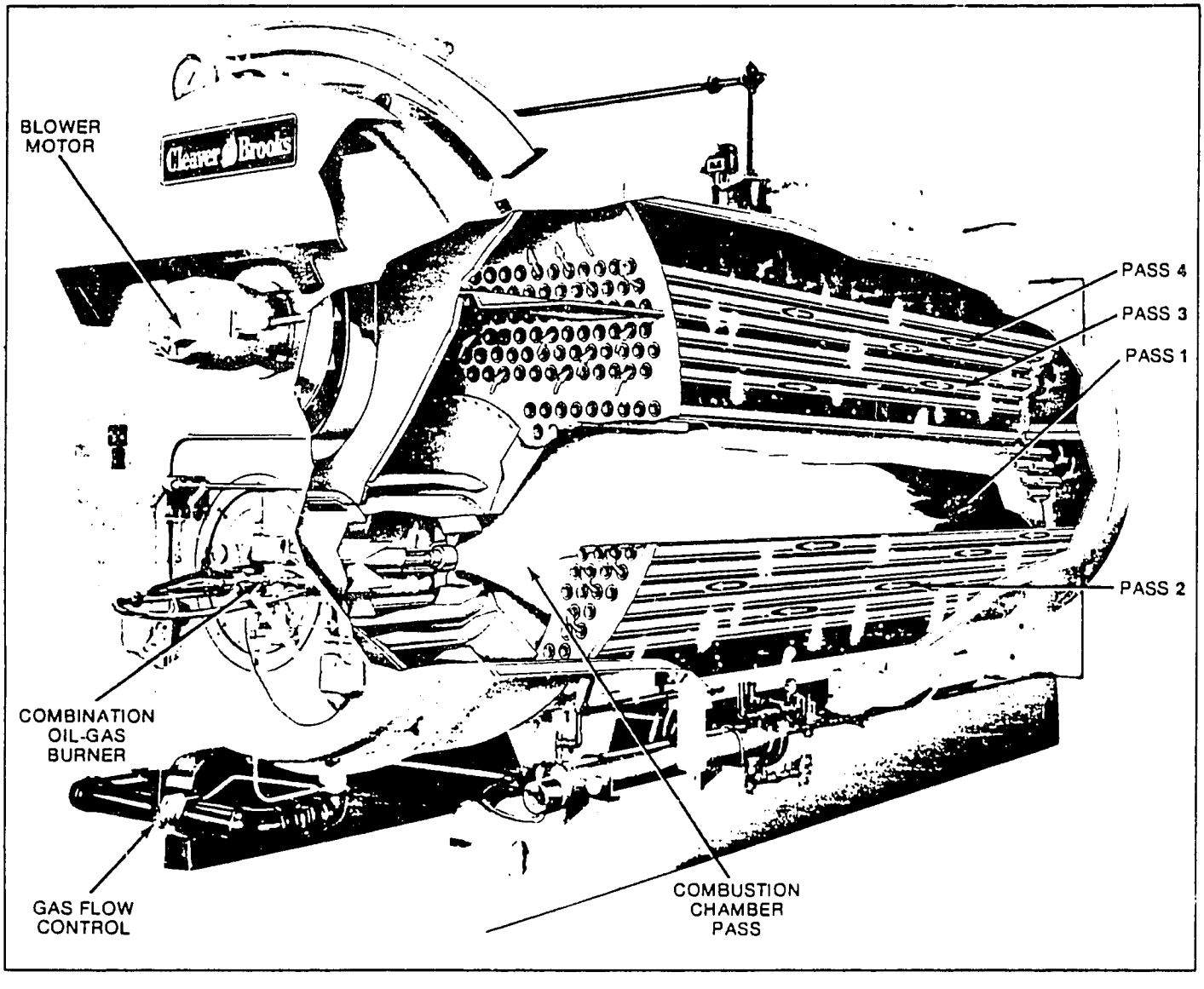

TYPICAL MODEL CB FIRETUBE BOILER CUT-A-WAY

Manual control of fuel and air flows into this boiler should not be permitted. Sufficient instrumentation would be available to check operating conditions, and a maintenance procedure would be employed to readjust the automatic control system and thus maintain high efficiency.

The existing boilers would be kept and used as standby.

Multifuel Boiler

Because a new packaged oil-fired boiler would require the use of expensive imported fuel, another option to consider is a boiler that can operate on a number of fuels.

For SLTC's purposes, the candidate multifuel boiler must be able to operate on solid fuels such as coal or wood, as well as on oil. Oil firing would be achieved by means of a standard packaged burner and used for start up and if solid fuels are in short supply.

There are two types of solid fuel-fired boilers, those that require the fuel in particulate form and those that can use large pieces such as logs. In the former case, fuel can be conveyed by pneumatic feed systems from the storage area directly into the boiler. Screw conveyor-type feed systems are also used for this purpose. Reasonably good automatic fuel feeding can be achieved with this type of system, because continuous flow is possible. However, equipment to chip or grind the solid fuel may also be required.

In the multifuel boiler that can use large-sized fuel, an additional under-floor fire grate and furnace must be provided. Some boilers of the packaged, skid-mounted type, however, can accept wood up to a certain size. The furnace must usually be constructed beforehand and lined with firebrick before the boiler is installed.

The efficiency of multifuel boilers is usually 8 to 10 percentage points less than that of oil-fired boilers. In oil-fired boilers, there is a high component of radiant heat from the flame that is effective in heat transfer. In multifuel boilers, the radiant heat component is generally not as effective because of lower flame temperatures and larger furnace sizes. Most of the heat transfer takes place in the convection mode. Thus, multifuel boilers in general need a greater heat transfer surface to obtain good efficiency. Package-type multifuel boilers fired on wood are likely to have a lower efficiency than boilers with under-floor furnaces and water preheaters. When firing fuels such as coal in a finely pulverized state, however, the multifuel boiler's flame temperatures can reach those of an oil-fired boiler, and boiler efficiency is likely to be higher.

Automatic fuel-feed systems can be installed even for boilers that burn large pieces of wood. However, manual feeding is more common in installations in developing countries. Multifuel boilers also require an additional

forced or induced draft fan when operating on solid fuel alone. When operating on oil, the fan in the packaged burner is capable of handling the required air flow. When operating on solid fuel, the burner is usually swung out of the way, which necessitates another means of air flow.

Because of the additional equipment required by a multifuel boiler, the capital, installation, and indirect costs are higher. A significantly larger floor space is required for this boiler. In addition, a large storage area is required when a solid fuel boiler is used, because solid fuels tend to be bulky in relation to their calorific value and require above-ground storage. Furnace oil can be conveniently stored in underground fuel tanks. In the case of coal and particulate fuels, additional handling and day storage equipment is also necessary (see Exhibit 1.b).

A multifuel boiler also needs a water treatment plant of the same size as that required by an equivalent oil-fired packaged boiler.

Operation and maintenance costs are likely to be higher than for an oil-fired packaged boiler, for several reasons:

- Boiler electricity demand is higher
- Labor requirements (especially in manual feeding) are greater
- More cleaning of interior surfaces is required, owing to greater contamination when burning solid fuels.

Coal-Fired Boiler

Another option in the case of SLTC would be to fit a coal-burning boiler. Coal can be burned either as lumps or in pulverized form. Most large power stations and other large boilers now use pulverized coal because of ease of handling and higher combustion efficiencies. However, in a smaller plant, the use of pulverized coal would increase the capital cost too much. The major characteristics of the different systems are listed in Exhibit 1.c.

With respect to the different types of stoker, the chain and traveling grate alternative would appear to be the best for SLTC because of its ability to handle different types of solid fuels. Also, it has the advantage of continuous cleaning, which reduces the possibility of ash and slag build-up.

When coal is used, considerable expense is incurred in fitting a suitable handling plant. A fairly substantial stockpile may have to be maintained because coal is an imported fuel and there are no major distributors at the present time in Sri Lanka.

Exhibit 1.b

Automatic Stoker Direct Combustion Solid Fuel Boiler

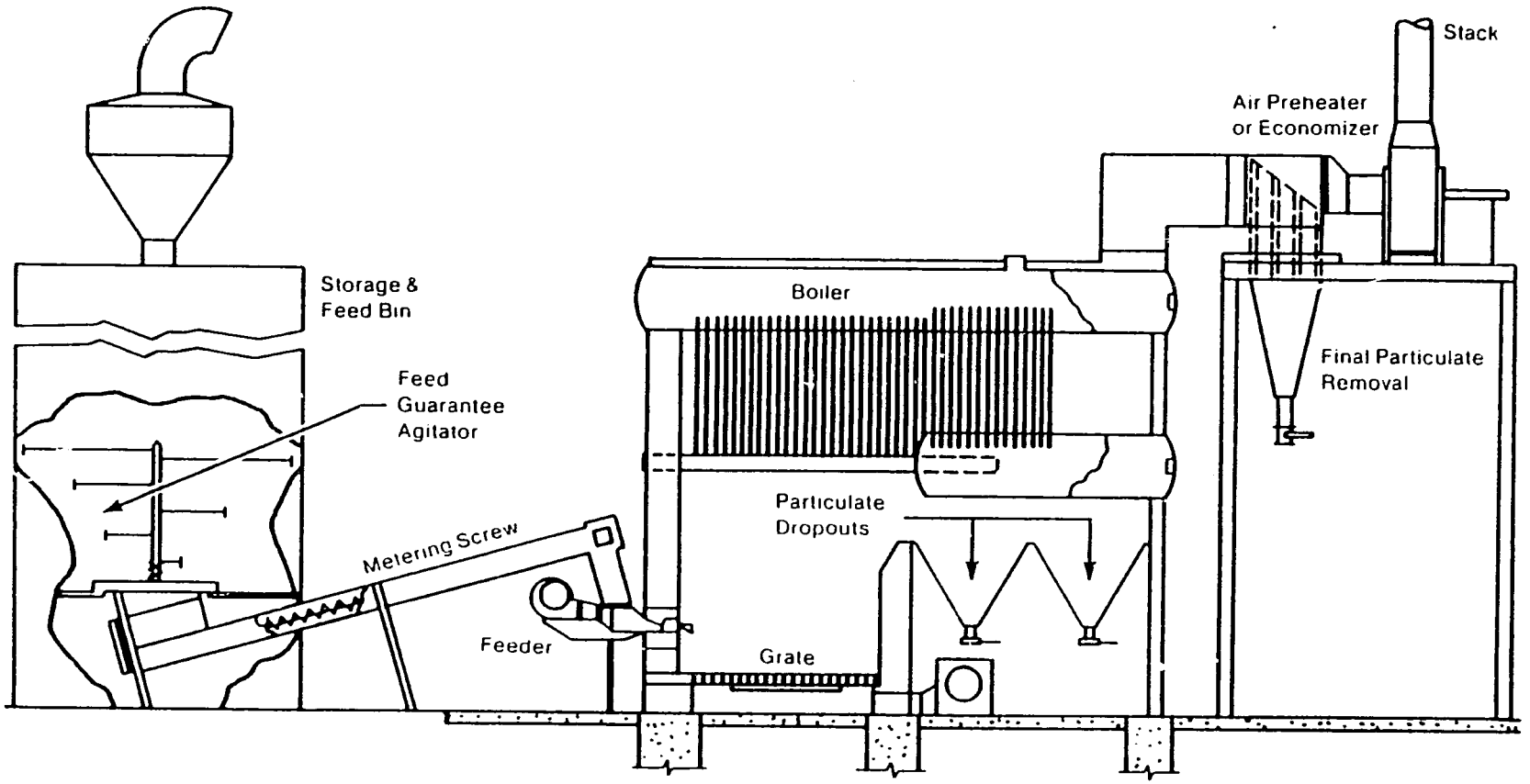

Exhibit 1.c

Coal-Fired Boilers: Types and Major Characteristics

Type			Characteristics		
				Range of steam generation	
Category	Subcategory	Type	Types of coals	Tonnes of steam/hour	Heat release (Mcal/hour)
Stoker boilers	Spreader	Stationary and dumping grate Traveling grate Vibrating grate	All except anthracite All except strongly caking bituminous All except strongly caking bituminous	Up to 200, but usually under 50	1,200/m^2 2,000/m^2 1,100/m^2
	Underfeed	Horizontal-feed (single and double retort)	Caking coals	10-15	825-1,150/m^2
		Gravity-feed (multiple retort)		Up to 250	1,400-1,650/m^2
	Water-cooled vibrating grate		Wide range of bituminous and lignite coals, even those with high free-swelling index	Up to (100-150)*	1,100/m^2
	Chain grate and traveling grate		Almost any solid fuel	Up to (100-125)*	1,400/m^2
Pulverized-coal boilers		Bin system Direct-firing	Almost any, but a given pulverizer can only operate efficiently on a narrow range of coals	Up to 2,000	Not applicable
Cyclone furnace		One-wall firing Opposed firing	Coals with slag viscosity below 250 poise at 1,427°C, volatile matter higher than 15 percent, and low ratios of sulfur/iron		4,000-7,500 Mcal/m^3

*Estimate.

SOURCE: Hagler, Bailly & Company.

Moreover, because coal produces undesirable substances in the flue gas, gas cleaning systems may be needed. These systems may be either baghouses or electrostatic precipitators.

Fluidized-Bed Boilers

A new and different type of boiler has achieved much prominence over the last 20 years. The major distinguishing feature in this type of boiler is the fact that fuel/air mixing and combustion take place within a bed of particulate incombustible matter, usually silica (sand), limestone, or coal ash. The heating surfaces are usually immersed in the bed. The flue gas released from the bed undergoes several heat exchanges to permit further heat absorption into the water and steam before discharge through the stack (see Exhibit 1.d).

Fluidized-bed combustion offers several advantages over conventional combustion techniques:

1. The ability to use a wide range of fuels, including those of low calorific value and those that are hard to ignite. The high degree of turbulent contact between air and fuel particles owing to the fluidization of the bed material, as well as the high (sometimes incandescent) temperature of the bed material, promote ignition of the fuel.

2. The ability to retain sulfur in the bed by the use of limestone (in the case of high-sulfur fuels). This characteristic is extremely useful because cleaning is carried out by cheap, in-bed methods, precluding the need for external electrostatic precipitators or other similar devices.

3. The ability to maintain bed temperatures at less than 1,000°C while still achieving high combustion efficiency. At this temperature, problems from the fusion of ash or the formation of bonded or sintered deposits do not arise.

4. Very high heat transfer coefficients between the bed and immersed heating surfaces. Both hot gas and bed material in a state of fluidization are in contact with immersed heating surfaces, which accounts for the high coefficient and partly explains why combustion zone temperatures are lower than in other non-fluidized high-intensity combustion systems.

5. The absence of moving parts in the combustion zone, which leads to greater durability and lower maintenance costs.

6. Maintenance of high efficiency at high turndown ratios. Unlike conventional boilers, high efficiency can be maintained

Exhibit 1.d

Typical Industrial Fluidized Bed Boiler

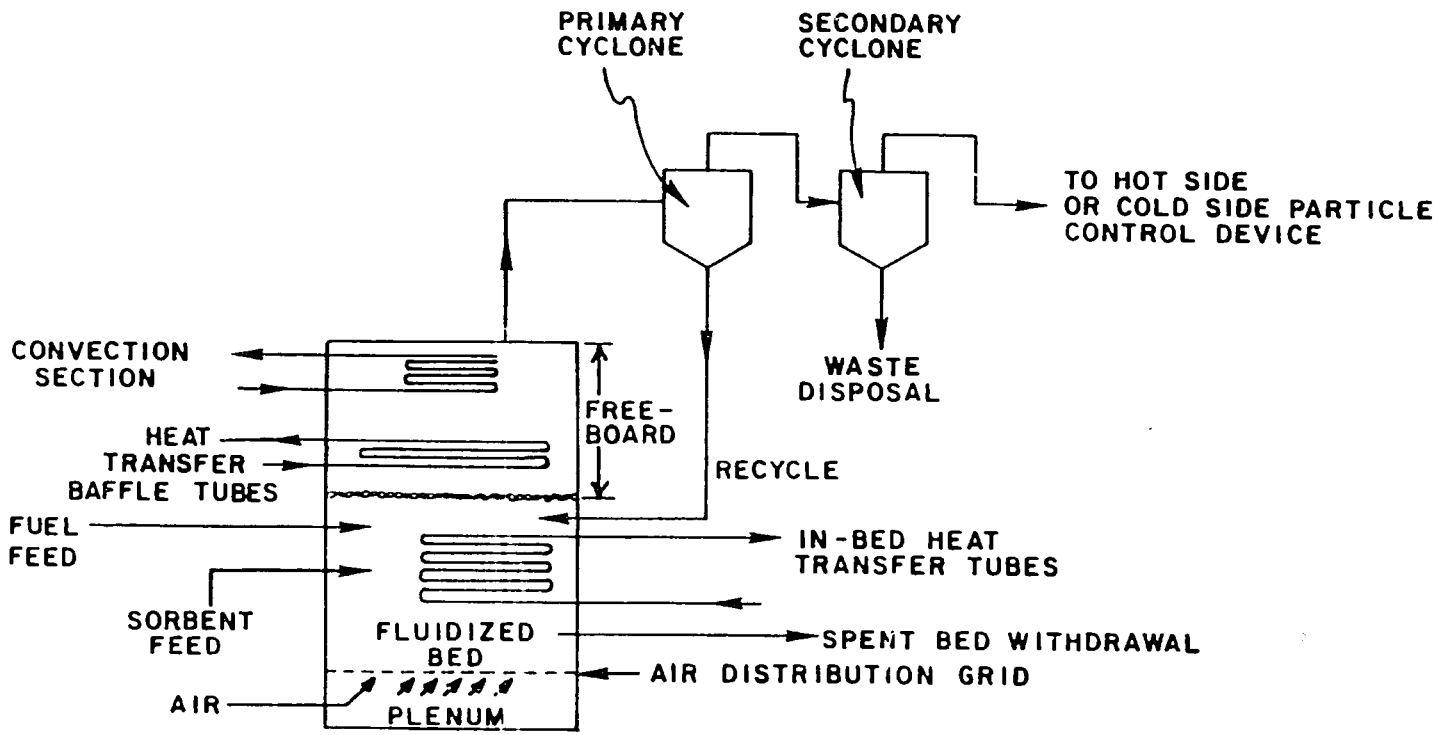

at low firing rates because bed characteristics do not change very much with reduced air and fuel inflow. Where a low firing rate is required, the depth of fuel on the bed is simply reduced, which reduces the firing rate.

7. Little or no fouling of immersed heat transfer surfaces, owing to the constant scouring action of the bed material in a state of fluidization.

The most modern type of fluidized-bed boiler designed for coal/solid fuel firing is now able to burn coal with a combustion efficiency of 94 to 96 percent and an overall efficiency of 80 to 85 percent. Since there is no fouling of surfaces, this efficiency level can be maintained easily over long periods of time.

A fluidized-bed boiler capable of handling different types of solid fuel would be very useful to SLTC. Some manufacturers of fluidized-bed boilers claim that there would be no difficulty in using tire wastes as a small proportion of the total fuel input. Firing on 100 percent scrap is not feasible because combustion control becomes difficult, owing in part to the high ash content. Also, SLTC has insufficient tire waste to allow 100-percent waste firing. Since SLTC is already thinking of purchasing an incinerator to dispose of its waste, the possibility of a fluidized-bed boiler should be seriously investigated.

COGENERATION SYSTEMS

Cogeneration is a modern term for an old practice, that of the on-site production of power and useful thermal energy. Most industrial plants in Sri Lanka now have standby power in the form of diesel generators. However, self-generated power could be used to displace purchased power on a continuous basis. The potential benefits include reduced energy costs, enhanced reliability of power supply, and improved quality of power supply. Some of the benefits from the national point of view would be reduction of fuel imports in cases where locally available fuels are used, and reduced or deferred capital expenditures for the construction of electric utility power plants.

The two basic classes of industrial cogeneration systems are topping and bottoming cycles, shown schematically in Exhibit 1.e. In topping cycles, thermal energy is first used to produce electric power by means of a thermodynamic cycle. Degraded thermal energy from a thermodynamic cycle is then used in industrial processes. Only three such systems have demonstrated commercial viability: boiler/steam turbine, combustion (or gas) turbine and heat recovery boiler, and reciprocating engine/heat recovery boiler. In bottoming cycles, energy is extracted from the heat rejected in the industrial process to drive a turbine that produces mechanical power or electricity. Either steam or organic fluid can be used as the working fluid, depending on the available maximum temperature.

Exhibit 1.e

There are Two Basic Types of Industrial Cogeneration Systems

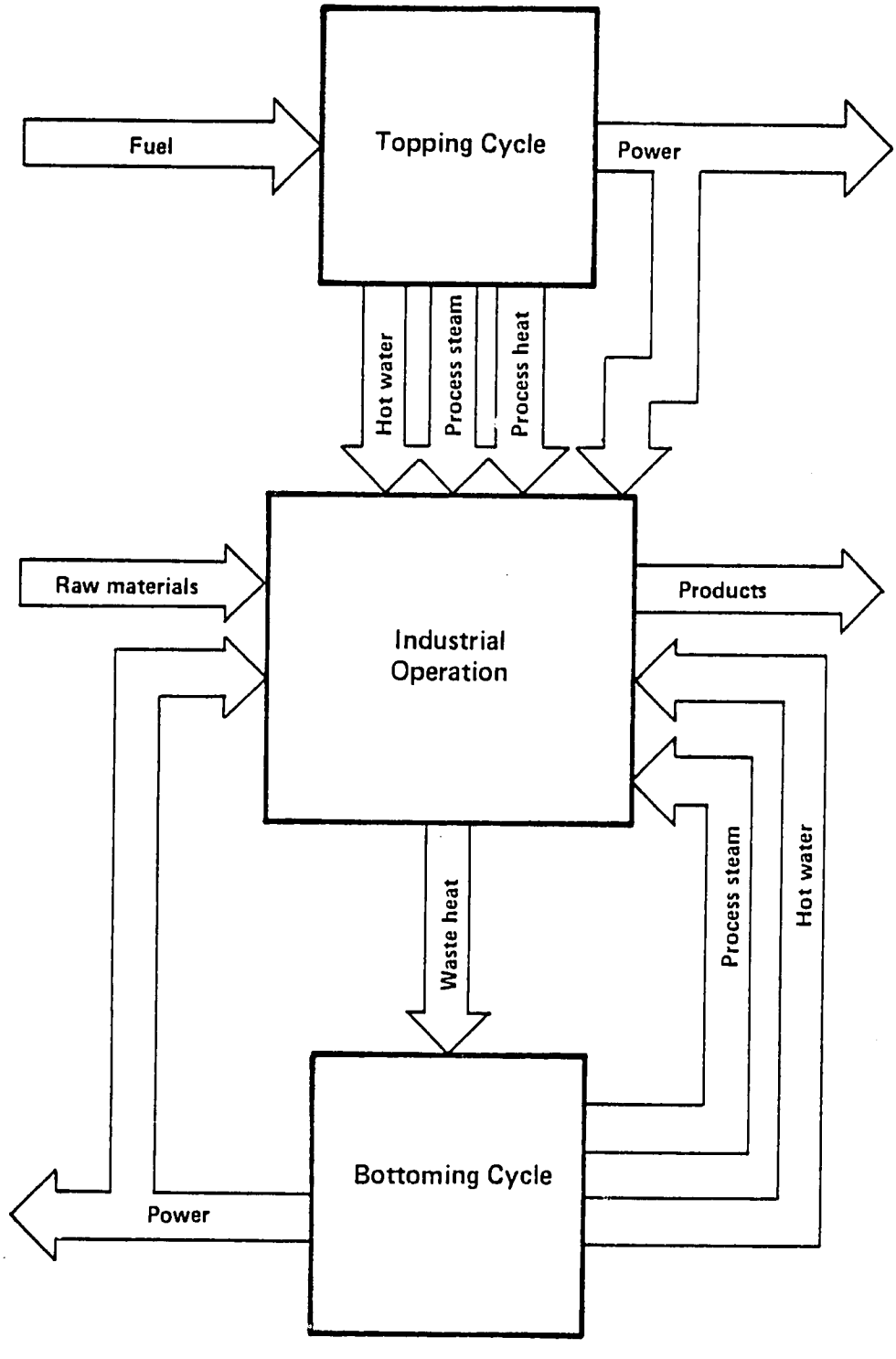

SOURCE: Hagler, Bailly & Company

In the case of SLTC, bottoming cycles cannot be used for several reasons. One is that the rejected condensate from the process is at a relatively low temperature, about 150°C. The lowest available sink temperature is about 70°C. As such, the maximum theoretical efficiency of a thermodynamic cycle would be around 29 percent, and the practically achievable efficiency would be about 8 percent at best. Furthermore, the capital cost of the plant would be very high in relation to total power output because the temperature differences for heat transfer are low. Thus, an organic fluid bottoming cycle would be required because the available maximum temperatures are too low for steam cycles. Such a system would have slightly higher operational and maintenance costs compared with a similar steam cycle.

Thus, SLTC would need to choose a topping cycle. Steam is essential for SLTC as a heat distribution medium, and steam temperatures and pressures are fixed at 200°C and 16 bar owing to process requirements. In the case of reciprocating engine cogeneration systems, a great deal of low-temperature heat (at about 80°C) is rejected in the cooling system. SLTC could not directly use this heat.

The ratio of heat in high-temperature exhaust gases to electric power is usually about 0.78:1 for a modern, efficient reciprocating diesel engine operating on heavy fuel. Hence, values of electric power and power available as steam can be tabulated as follows, assuming an 80-percent efficiency for the waste heat boiler:

Electric power (MW)	Thermal power in steam (kW)
1.0	626
1.5	940
2.0	1,250
3.0	1,875
8.65	5,416
10.54	6,596

The maximum steam requirement at SLTC is 9.5 tons per hour at 16 bar, which is equivalent to the last figure in the right-hand column of the table above. Thus, the electric power generation capacity would be 10.54 MW, which is far in excess of SLTC's actual demand of about 3.5 MW.

A major argument against SLTC's use of a reciprocating engine is the fact that it operates on oil, which must be imported at high cost. Although SLTC could dispose of excess electric power by selling it back to the national grid, which would make financial sense, a reciprocating engine cogeneration system would entail high foreign currency requirements and it is not clear if CEB would purchase excess power at an attractive price over the project's life.

In a gas turbine cogeneration system, nearly all the rejected heat flows out as high-temperature exhaust gas and this energy can be converted to steam in a waste heat recovery boiler.

The electric power and steam outputs can be tabulated as follows, assuming a boiler recovery efficiency of 80 percent:

Electric power (MW)	Power into steam (kW)
1.0	2,400
1.5	3,600
2.0	4,800
3.0	7,200
2.7	6,596

From the last figure, it can be seen that a gas turbine system can produce a significant proportion of the electric power requirements at SLTC. It also has a capital cost advantage over both steam turbine and reciprocating engine systems.

However, the major disadvantage mentioned in the case of reciprocating engines also applies to gas turbines. They run on petroleum fuel, which must be imported. On the other hand, coal-fired gas turbines are in the development stage in countries such as the United States. Even though coal also must be imported, the relative cost advantage is such that the use of coal would be a financially and economically viable technology for Sri Lanka. At the present time, however, coal-fired gas turbines are an unproven technology and cannot be considered an option.

With respect to system durability and maintenance costs, gas turbines are significantly more expensive than reciprocating engines or steam turbines.

The optimal cogeneration system for SLTC would be one based on a steam turbine. Below, we describe three such systems.

Oil-Fired Packaged Boiler/Back Pressure Steam Turbine

In one type of steam turbine-based cogeneration system, steam is generated at a pressure and temperature much higher than that required by a packaged boiler operating on furnace oil, and is then fed into a turbine (see Exhibit 1.f). The exhaust pressure and temperature of the turbine correspond to the required maximum pressure and temperature in the process. The enthalpy drop of the steam in the turbine results in the generation of shaft power and hence electric power.

Typically, small to medium-sized steam turbines used in this application have a thermal efficiency of 40-60 percent, related to the total enthalpy drop across the turbine. In large multistage units, this efficiency can be

Exhibit 1.f

H.P. steam = High-pressure steam
L.P. steam = Low-pressure steam

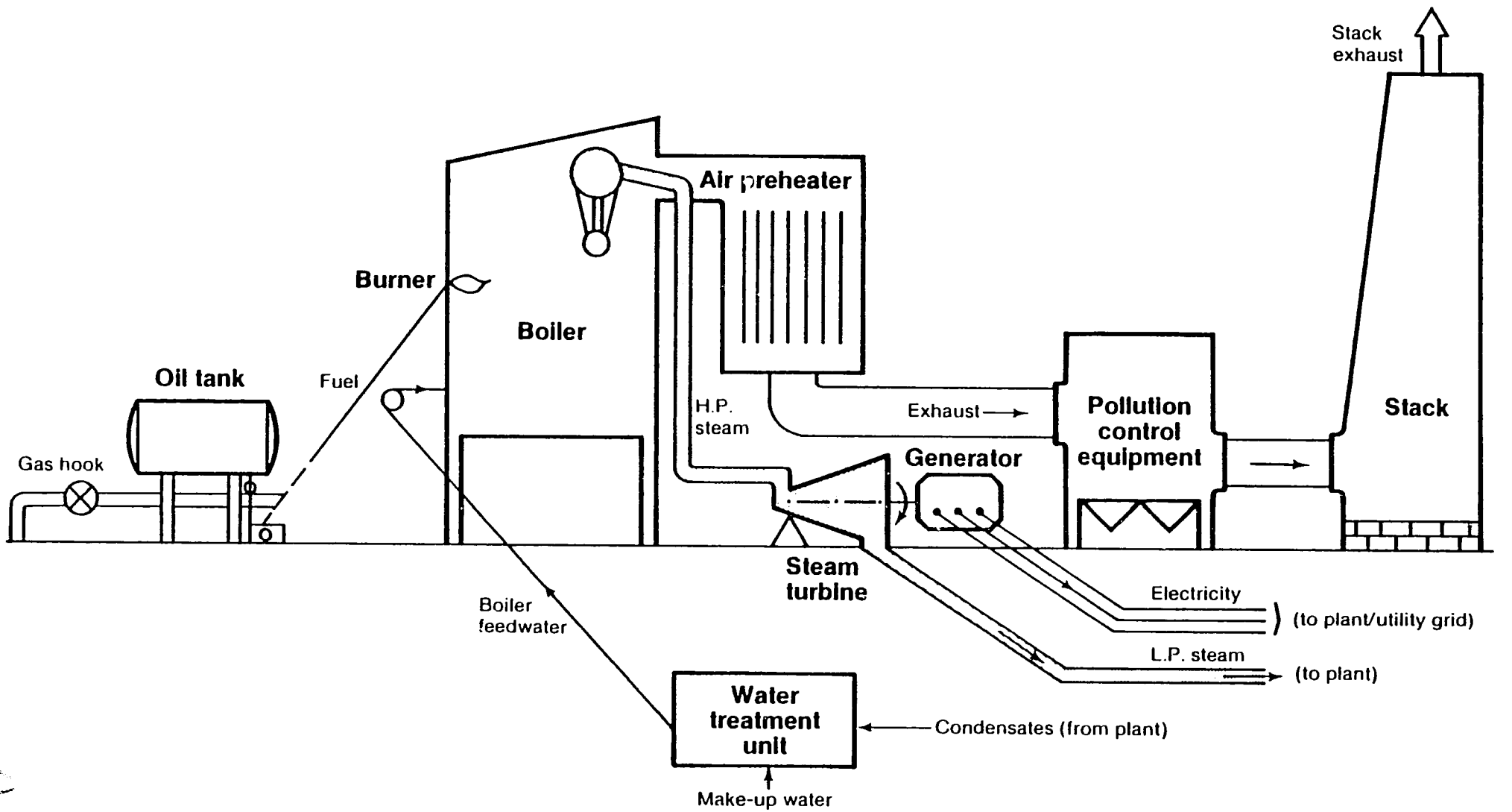

as high as 80 percent. Efficiency usually varies with the load conditions, thermodynamic conditions at entry and exit, the turbine size and speed, and the type of turbine stages.

The specifications for an installation at SLTC would be:

- Maximum pressure: 44 bar
- Maximum output: 9.5 tons/hour
- Fuel: furnace oil -- 1,000 seconds*
- Turbine power output: 230 kW, pressure -- 16 bar, temperature -- 200°C (saturated).

Superheat is required to increase steam enthalpy prior to entry into the turbine without increasing boiler working pressure. The turbine is likely to be of the single wheel type connected to an alternator through a suitable gear box.

This type of turbine would be able to operate continuously on load, throughout the year. Although the power output is small compared with the total plant requirement at SLTC, turbine power could be used mainly to run the boiler ancillary services (e.g., feed pumps, burner). In this way, expenditures on utility-supplied electricity could be reduced.

Multifuel Conventional Boiler/Back Pressure Turbine System

Another option that would be suitable for SLTC is a back pressure turbine combined with the multifuel boiler described earlier. The temperature and pressure conditions of this boiler would be the same as those of the packaged boiler (i.e., 44 bar pressure and about 100°C of superheat). The turbine and power output would also be the same.

The main difference would be that boiler efficiency would be around 72 percent at best, compared with 80 to 82 percent for a packaged oil-fired boiler. However, this reduction in efficiency is offset by the much lower cost of both wood and coal.

As in the previous case, the steam at turbine exhaust would have a pressure of 16 bar and a temperature of 200°C, as required by the process.

*Fuel oil of higher viscosity is available from CPC.

Multifuel Stoker Boiler/Extraction Condensing Turbine

In the case of turbine-type generating systems, another option would be to allow the steam to expand to a low pressure and temperature within the turbine itself and to extract steam from the turbine at a point where the pressure and temperature conditions are correct for process equipment. This configuration is generally much more flexible in terms of relative adjustment of steam flow and shaft power. For example, additional power can be generated at times when process steam demand is low.

To achieve a reasonably high efficiency from extraction turbines, condenser temperatures and pressures must be kept as low as possible. Efficiency is further improved if feedwater can be heated by extracted steam, but such heating would lead to unacceptable capital costs in the case of the smaller units considered here.

The efficiency of extraction/condensing turbines is usually less than in the case of pure back pressure turbines. The efficiency is lower because it becomes progressively harder to extract work at the lower pressure end without having a number of large-diameter turbine wheels, which cost considerations preclude in small installations.

Because process steam is extracted from the turbine itself between stages and because a reasonable efficiency must be achieved, turbines for extraction/condensing have two or more turbine wheels. Hence, the capital costs increase significantly over those of back pressure-type turbines. A further increase in capital costs results because a condenser must be fitted at the turbine exhaust to provide suitable thermodynamic conditions and to permit recovery of condensate.

However, much greater electric power generation is possible, which offsets the higher capital cost. Three turbine sizes -- 500 kW, 1,000 kW, and 1,500 kW -- have been considered for SLTC. The technical specifications are:

- Electric power: 500 kW, 1,000 kW, and 1,500 kW, respectively
- Boiler capacity required: 10,000 kg/hr, 15,000 kg/hr, and 18,000 kg/hr, respectively
- Boiler pressure: 44 bar
- Superheat: 100°C
- Condenser temperature: 40°C
- Condenser steam inlet pressure: 0.05 bar
- Multifuel capability: wood, waste, coal.

An extraction/condensing turbine would not require a significant increase in labor over that required for a back pressure turbine. However, a somewhat higher level of operator skill would be required because of the need for a condenser.

The durability of both back pressure and condensing turbines is likely to be very high. Also, continuous operation with very few unplanned outages should be possible, as steam turbine technology is well proven.

Thermal Fluid Heaters — Packaged or Multifuel Types

In a thermal fluid heater, the heat transfer medium is a special mineral oil rather than the water that is used in conventional boilers. The oil always circulates as a liquid and is never vaporized at any part of the cycle. Thus, its boiling point is on the order of 600°C-700°C (see Exhibit 1.g).

The main advantage of a thermal fluid system is that it allows very high temperatures of the circulating medium to be achieved without a corresponding high pressure, unlike a system using steam. For example, steam at a temperature of 300°C yields a saturation pressure of 85 bar. In the case of mineral oil, the vapor pressure at the same temperature would be about 1.25 bar. Another advantage of using thermal fluid in vulcanization is that a much higher temperature can be used, resulting in faster initial heating times and thus an increase in productivity.

The main disadvantage of thermal fluid heating is that mineral oil costs much more than treated water.

Thermal fluid heaters operate on the same principle as boilers, with one exception. There is nothing that corresponds to a steam drum, because the fluid never vaporizes and the separation of dry saturated vapor from liquid is thus unnecessary. Generally, the overall efficiency of a thermal fluid heater would be a few percentage points higher than that of a boiler of equivalent heat output because heat transfer on the fluid side is better and tube wall thicknesses are usually lower.

In the case of SLTC, superheated water is used in the curing of tires to permit independent control of temperature and pressure. Thermal fluid can be used in a similar way, but may not be warranted at SLTC for the following reasons. The older vulcanizers at SLTC use a curing bag, which is connected to the superheated water circuit through a valve. If operators are not careful during connection and disconnection, loss of thermal fluid could occur. Given the total number of pipework connections required for the large number of individual vulcanizers at the plant, thermal fluid loss is inevitable, even if plant maintenance is to a very high standard.

Furthermore, plant personnel are very familiar with steam systems, whereas thermal fluid heating systems would constitute a completely new

Exhibit 1.q

Thermal Fluid Heater

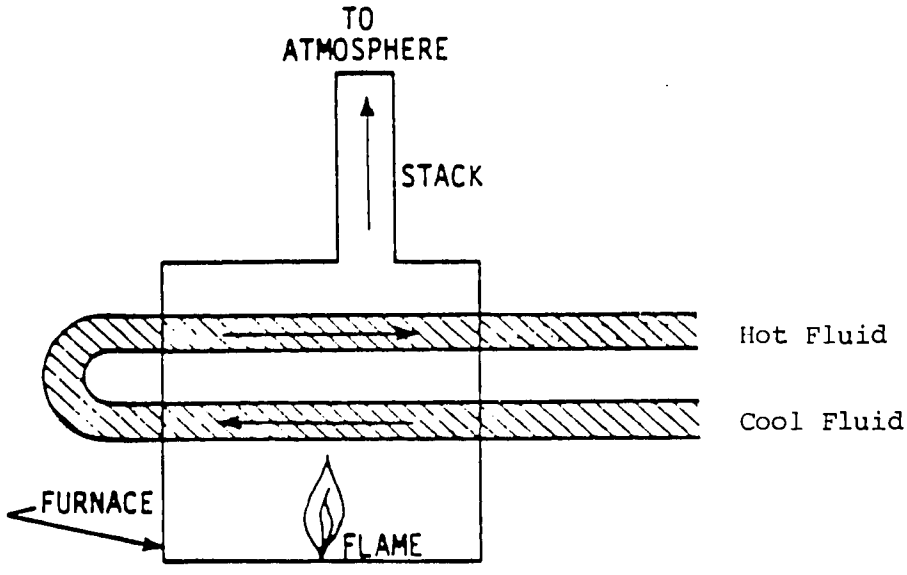

technology. Perhaps the most important reason, however, is that 202°C is the maximum process temperature required. As steam pressures are not excessive at this temperature, the slightly higher efficiency obtainable with a thermal fluid heater would not justify conversion of the whole system. In addition, backup requirements would necessitate an additional heater, which would double the investment cost (in the case of steam, the old boilers can still be used). Consequently, this option was not retained in the list of viable options for further study.

Gasifier

SLTC might be able to gasify a solid fuel such as wood and use the gas in a boiler or in reciprocating engines to generate power.

The advantage of gasification is that the resulting gas can be used in existing oil-fired boilers with few modifications. In an installation where oil-fired packaged boilers have a reasonable thermal efficiency but direct conversion to solid fuel is not feasible because of design considerations, the gasification option is worth considering. The installation would consist of the gasifier with fuel storage and handling facilities and new burners capable of handling gas.

The existing burners and boilers at SLTC are very inefficient and not worth rehabilitating. Thus, the gasifier option is not justified because a new, more efficient boiler would also have to be purchased. It would therefore be more advisable to install a multifuel boiler.

SELECTION OF MOST ATTRACTIVE OPTIONS

The new oil-fired packaged boiler was considered to be the most simple and viable option (80 percent efficiency can easily be achieved, versus 54 percent efficiency with existing boilers).

The various multifuel (wood/oil) and coal stoker or fluidized-bed boilers, with or without steam turbines, were all considered worth exploring on the basis of similar analyses carried out in Sri Lanka (many such preliminary studies were available from several companies, including Ceylon Tobacco Company and the National Paper Corporation).

The gasifier option was rejected because the low efficiency of existing boilers would not justify such retrofitting, based on similar studies reviewed by Hagler, Bailly & Company (see Thulhiriya textile plant feasibility study). Also, the cogeneration options using oil were dismissed because of uncompetitiveness with utility generation.

Together with SLTC and EDMAC, we identified five options that warranted further study:

- Option 1: new oil-fired packaged boiler
- Option 2: new multifuel (wood/oil) boiler
- Option 3: new multifuel (wood/oil) boiler/back pressure steam turbine
- Option 4: new multifuel (wood/oil) boiler/extraction condensing steam turbine
- Option 5: new coal-fired boiler (stoker or fluidized-bed).

In the next chapter, we present our assumptions on investment costs, operation and maintenance costs, and performances for each option. These assumptions were used in our detailed financial and economic evaluations (Chapters 3 and 4).

The thermal fluid heater option was rejected by plant staff on the basis of the requirement for 16 bar steam and a lack of familiarity with the handling/safety aspects of such fluids. In addition, first cost considerations showed that such a dramatic system change would be far too costly, as new backup (the old boilers cannot be used any longer) would be required.

2 COST AND PERFORMANCE ASSUMPTIONS

In this chapter, we present the assumptions used in estimating system capital and O&M costs and benefits (i.e., energy cost savings plus indirect benefits) for each of the five options retained for analysis:

Option no. 1:	New oil-fired packaged boiler
Option no. 2:	New multifuel (wood/oil) boiler, burning wood primarily
Option no. 3:	New multifuel (wood/oil) boiler with back pressure steam turbine (16 bar exhaust, steam following mode)
Option no. 4:	New multifuel (wood/oil) boiler with condensing steam turbine (16 bar extraction, steam following mode)
Option no. 5:	New multifuel (coal/oil) boiler burning coal primarily.

Other assumptions regarding fuel prices are presented in Appendix C, and other general financial/economic assumptions in Chapters 3 and 4.

OPTION 1: NEW OIL-FIRED PACKAGED BOILER

Below, we present the assumptions on investment cost, operation and maintenance costs, and fuel savings with respect to this option.

Investment Cost

The new oil-fired boiler is sized at 10 tonnes of steam per hour (tsh) for maximum steam demand (MSD), which is currently around 9.5 tsh. Average steam demand, which currently runs at 7 tsh, will decrease to about 5.7-6 tsh after implementation of audit recommendations (see Appendices A and B) bar increase again up to 7 tsh with expansion project (see Appendix F). In estimating investment cost, only MSD (9.5 tsh or about 20,000 pounds/hour) is relevant. When steam demand exceeds MSD (as happens for a few hours each year), one of the three old boilers will be used. The following investment costs have been based on a 10 tsh (22,000 lb/hr) design capacity.

Based on the price quotations received by Hagler, Bailly over the past 2 months, total investment cost for the new boiler is estimated at Rs.13 million, of which Rs.11.78 million are direct capital cost and Rs.1.23 million are for engineering and design. The investment cost (before interest during construction; see Chapter 3) is about Rs.600/lb of steam per hour or about U.S. $24/lb of steam per hour. Of the Rs.13 million, less than Rs.3 million correspond to the FOB price of the boiler. A detailed breakdown of the investment cost is presented in Exhibit 2.a.

Indirect costs, which are usually associated with downtime and production interruptions, are assumed to be negligible because of the three boilers available at the plant.

The disbursement schedule for the investment outlays covers five quarters.

Operation and Maintenance

Operation and maintenance (O&M) costs consist of the labor, power, chemicals, water and spare parts required in addition to those needed by the existing boilers. In the case of this option, we assumed that only the labor requirement would change, as an additional boiler operator should be hired. The associated cost is estimated at Rs.10,800 per quarter (1 operator x 3 shifts x 3 months x Rs.1,200/month) (see Exhibit 2.b).

Spare parts. Assumed to represent an annual expenditure of 7 percent of local equipment cost (Rs.65,000/quarter).

Fuel savings. Assuming an average annual efficiency of 80 percent versus 54 percent for the existing boilers, the amount of oil that will be saved quarterly is 433 tonnes.

No other indirect benefits were considered.

OPTION 2: NEW MULTIFUEL WOOD/OIL BOILER

This new multi-fuel boiler, also sized at 9.5 tonnes of steam/hour MSD (10 tsh design capacity), was assumed to be a conventional boiler with associated handling and storage facilities.

Investment Cost

Total investment cost for this option is estimated at Rs.31.6 million (Rs.1,434/lb/hour or U.S. $57.50/lb/hour), based on a series of price quotations reviewed in Sri Lanka and other quotations received from U.S. and European manufacturers. Of this Rs.31.6 million, Rs.5.53 million -- 17.5 percent -- are designated as engineering and design costs. A detailed cost breakdown is shown in Exhibit 2.a.

Exhibit 2.a

Sri Lanka Tyre Corporation: Capital Outlays for the Five Project Options
(Values in current Rs. (000); installation begins
third quarter 1984 and occurs over 4 to 6 quarters)

Cost element	Project options[1]				
	Option #1	Option #2	Option #3	Option #4	Option #5
Boiler system					
Equipment (CIF, Colombo)					
Boiler	4,842	7,984	11,589	12,336	7,984
Water treatment	708	720	720	1,788	720
Fuel handling and storage	0	3,398	3,756	5,497	3,398
Stack	804	1,014	1,022	1,016	1,014
Other	804	1,0 4	1,104	1,016	1,014
Total equipment (CIF, Colombo)	7,158	14,130	18,191	21,653	14,130
Installation					
Boiler	804	4,787	5,365	6,986	4,787
Building	603	811	1,022	1,524	811
Foundation	402	1,014	1,533	2,032	1,014
Other	502	1,105	1,104	508	1,105
Total installation	2,311	7,717	9,024	11,050	7,717
Contingency on boiler system	2,310	4,218	5,365	6,097	4,218
Engineering/design for boiler system	1,228	5,527*	6,360*	7,959*	5,416*
Total cost for boiler system	13,007	31,592	39,440	46,759	31,481
Turbine/generating system					
Equipment (CIF, Colombo)					
Turbines/generator	N/A	N/A	848	10,283	N/A
Controls & switchgear	N/A	N/A	245	1,030	N/A
Other	N/A	N/A	110	515	N/A
Total equipment (CIF, Colombo)	N/A	N/A	1,203	11,828	N/A
Installation					
Turbine/generator	N/A	N/A	291	2,159	N/A
Building	N/A	N/A	102	310	N/A
Foundation	N/A	N/A	72	310	N/A
Other	N/A	N/A	0	306	N/A
Total installation	N/A	N/A	465	3,005	N/A
Contingency on turbine/generating system	N/A	N/A	129	750	N/A
Engineering/design for turbine/generating system	N/A	N/A	125	1,500	N/A
Total cost of turbine/generating system	N/A	N/A	3,460	17,163	N/A
TOTAL PROJECT COST	13,007	31,592	42,900	63,922	31,481

[1]Option 1: new oil-fired boiler
Option 2: new multifuel boiler burning wood and oil
Option 3: new multifuel boiler burning wood and oil with cogeneration (backpressured turbine)
Option 4: new multifuel boiler burning wood and oil with cogeneration (condensing turbine)
Option 5: new multifuel boiler burning coal and oil.

*Includes system start-up and testing cost.

Notes to Exhibit 2.a

OPTION 1

Equipment

The equipment required would be:

- 1 packaged skid-mounted boiler, comprising boiler vessel complete with internals, packaged burner complete with FD fan, burner head, ignitors, flame sensors, air damper, oil preheater, automatic constrols, etc.
- Boiler feed pumps -- 2 electric or 1 electric and 1 steam
- Instrumentation -- pressure and temperature gauges, pressurestat for burner control
- 3 safety valves
- Main steam control valve
- Automatic or manual blowdown system. Alarms/cut-outs -- high, low water level, excessive pressure, etc.
- 1 economizer
- 1 sootblowing system
- 1 water treatment plant comprising 1 ion-exchange unit for water softening to be operated by automatic time clock
- 1 chemical dosing unit including adjustable dosing pump
- 1 chimney stack to be built locally from steel plant in conformity with environmental regulations.

Installation

Building: A single-story concrete-floored building with an area of approximately 1,000 square feet, completely constructed of locally available material.

Foundation: Reinforced concrete foundation for placement of boiler.

Boiler Installation

For hire of cranes, connecting pipework to existing oil storage tanks, installation expenses.

Engineering/Design Costs

These costs include all architectural and engineering fees for the civil works, boiler installation and commissioning, etc., as well as all expenses that may be associated with the services of a commissioning engineer from the boiler manufacturers.

OPTION 2

Equipment

Comprising:

- 1 multi-fuel boiler
- 1 evaporator system
- 1 economizer
- Valves and accessories comprising 3 steam safety valves, all isolating, drain, and vent valves as required
- Firing equipment for solid fuel
- Vibrating grate stoker, complete.

or:

- Chain grate stoker, complete.
- In all cases with necessary hoppers/feeder, igniting systems, primary and secondary air distributions systems, etc.

plus:

- The option of fitting a pneumatic conveyor system for particulate fuels such as sawdust, chipped wood, and dried coir dust. Manual feed of solid fuels instead of mechanical feeding arrangements would be acceptable in Dutch oven type M/F boilers with underflow furnaces.
- Water treatment plant with the same function as in option no. 1.
- Solid fuel handling and storage system comprising conveying systems from storage locations to boiler and clips if required.

Installation

Building: A single-story concrete-floored building with provisions for underflow furnace if necessary. Floor area to be approximately 1,500 square feet.

Foundation: Reinforced concrete foundation for placement of boiler and accessories.

Boiler Installation

For hire of cranes and lifting equipment, to construct underground furnace, additional parts required, etc.

Indirect Costs

The engineering design costs for the same activities listed in the relevant section of option no. 1.

OPTION 3

Equipment

In addition to the equipment required for option no. 2:

- The multi-fuel boiler to operate at a higher pressure (44 bar), hence internal parts must be to a higher specification (9.5 tsh maximum).

Additional parts include:

- 1 superheater to increase steam temperature
- Water treatment plant (as in option no. 2)
- Fuel handling and storage system (as in option 2)
  - Increased fuel feed rate requires a somewhat larger fuel handling plant than that in option no. 2
- Chimney stack
- Turbine
  - Comprises single or double wheel turbine coupled to a 415 V 50 hZ generator, through a reduction gearbox. Maximum generating capacity would be 300 kW.
  - Separate generator controls and switchgear.

Installation

Building: As for option no. 2, but with an increase in space for installation of the turbine and generator.

Foundations: As for option no. 2, but a heavier foundation required for higher pressure boiler.

Boiler & Turbine Installation

As for option no. 2, but increased costs because of heavier boiler and additional turbine/generator.

Indirect Costs

As for option no. 2, but increased costs because of higher pressure boiler, superheater, and turbine/generator unit.

OPTION 4

Equipment

- 1 multi-fuel boiler as in options no. 2 and no. 3, but with increased steam generating capacity to supply the extraction condensing turbine (12 tsh at 44 bar)
- 1 superheater
- 1 economizer
- All other items as specified in options no. 2 and no. 3
- Water treatment plant
  - Higher capacity than for option no. 3
- Fuel handling and storage system (as for option no. 3)
  - An increased fuel feed rate will require a somewhat bigger plant than that specified in option no. 3
- Chimney stack
- Turbine
  - Specifications as in option no. 3. Turbine electrical generating capacity is much greater, around 900 kW. It will be a multi-stage type, with steam extraction for process taking place between two stages (up to 500 kW from the condensing stage for 4.5 tsh at the condensor).

Installation

Building: As for option no. 3, but with a further increase in space for installation of a larger turbine and generator.

Foundation: As for option no. 3, but heavier foundation required for heavier boiler and bigger turbine.

Boiler & Turbine Installation

As for option no. 3, but increase in costs because of heavier boiler, turbine, and condensor.

Indirect Costs

As for option no. 3, but increased because of more items.

OPTION 5

Same as option no 2, except slightly less for fuel handling and storage and slightly more for boiler plant because of particulate and ash removal systems.

xhibit 2.b

ri Lanka Tyre Corporation: Operating and Maintenance Expense for the Five Project Options
Values in Current Rs (000))

Cost element	Project options[1]				
	Option #1	Option #2	Option #3	Option #4	Option #5
perations begin	4Q/1985	1Q/1986	1Q/1986	1Q/1986	1Q/1986
perating & maintenance expense or first operating period					
abor	11	86	113	113	86
lectricity	0	576	576	576	576
ater and chemicals	0	68	68	68	68
pare parts	65	247	356	586	247
ther	0	158	215	320	158
otal	**76**	**1,135**	**1,328**	**1,663**	**1,541**
otal operating and maintenance xpense for subsequent time periods					
irst quarter 1987	322	1,707	1,862	2,114	1,707
irst quarter 1988	354	1,891	2,062	2,341	1,891
irst quarter 1989	390	2,094	2,284	2,593	2,094
irst quarter 1990	429	2,320	2,530	2,872	2,320
irst quarter 1991	472	2,570	2,802	3,262	2,570
irst quarter 1992	519	2,847	3,103	3,522	2,847
irst quarter 1993	571	3,153	3,436	3,901	3,153
irst quarter 1994	628	3,493	3,806	4,320	3,493

Option 1: new oil-fired boiler
Option 2: new multifuel boiler burning wood and oil
Option 3: new multifuel boiler burning wood and oil with cogeneration (backpressured turbine)
Option 4: new multifuel boiler burning wood and oil with cogeneration (condensing turbine)
Option 5: new multifuel boiler burning coal and oil.

Operation and Maintenance

Operation and maintenance costs considered here are those costs above the O&M costs of the existing oil-fired boilers. They consist of any additional labor, power, chemicals, water, electricity, and spare parts that are required. We estimated the O&M costs as of third quarter 1984; however, in our financial analysis, these values were escalated to reflect expected inflation.

Labor. Solid fuel-fired boilers need more manpower than oil-fired boilers because of the more complex combustion and storage, handling, loading, and ash handling systems. In this case, an additional qualified boiler operator would be needed at Rs.2,500 per month and an additional fuel loader/operator at Rs.2,000 per month. Because the plant operates three shifts, corresponding additional expenditures would be Rs.22,500 and Rs.18,000 per quarter, respectively. In addition, one manager will be required to supervise multifuel boiler operation, fuel purchasing (wood), and fuel handling and storage (Rs.5,250/month x 3 months = Rs.15,750) and one additional maintenance technician per shift will be needed (at a cost of Rs.2,250 per month x 3 months x 3 shifts, or Rs.20,250 per quarter). Total additional labor cost comes to Rs.76,500 per quarter (as of the third quarter of 1984; by the time the new boiler begins operation in the first quarter of 1986, we estimate that this value will have escalated to Rs.86,000).

Power. Additional power will be needed for fuel handling and the induced draft fan on the boiler. We assumed that 135 kW will be needed (90 kW for wood handling and 45 kW for the fan). At Rs.2/kWh, total additional electricity costs are estimated at Rs.500,000 per quarter (1,800 hr/quarter), including additional demand charges. By the beginning of operation, this value will have escalated to Rs.576,000.

Chemicals and water. Increase only moderately, because of the greater heating area. We have estimated additional costs at Rs.60,000/quarter. Again, with escalation, the value would be about Rs.68,000 at the beginning of operation.

Spare parts. The cost of additional spare parts is assumed to be 7 percent of initial equipment cost per year or about Rs.247,000 per quarter at the beginning of operations (see Exhibit 2.b).

Other. Other annual O&M costs have been assumed to represent 2 percent of total project cost.

Fuel Savings

The proposed new multifuel boiler will run primarily on wood, but can also use oil if there is any problem with wood supply (e.g., wood handling breakdown, delay in delivery). For the purpose of the analysis, we assumed

that the boiler would run 85 percent of the time on wood and 15 percent of the time on oil. Using wood at 40-45 percent moisture, boiler efficiency on wood is assumed to be 72 percent and on oil, 80 percent. Consequently, average fuel consumption per quarter would be 135 tonnes of oil and 3,602 tonnes of wood.

OPTION 3: NEW MULTIFUEL (WOOD/OIL) BOILER WITH BACK PRESSURE STEAM TURBINE

This option is similar to option no. 2, except that boiler pressure and size are higher to allow the generation of higher pressure (40 bar) steam to generate electricity. Based on a review of vendor specifications, about 230 kW can be produced to satisfy process steam requirements (16 bar, 7.5 tph average). The design turbine maximum output would be about 300 kW (at 9.5 tph maximum steam demand).

Investment Costs

We estimated total investment costs for this option at Rs.42.90 million, of which Rs.7.1 million are earmarked for engineering and design (see Exhibit 2.a). Consequently, the additional costs incurred by the cogeneration configuration are Rs.11.31 million, which correspond roughly to U.S. $1,500/kW installed. This high cost stems primarily from the fact that turbine efficiency is low at such small system sizes (22,000 lb of steam/hour) (see Exhibit 2.a).

Operation and Maintenance Costs

Labor. In addition to the incremental O&M costs of option no. 2, one additional turbine operator per shift will be needed at Rs.2,500 per month, for a total of Rs.100,000/quarter (113,000 at the beginning of operations). The back pressure turbine will produce an estimated 288,000 kWh per quarter.

Water and chemicals. This cost is unchanged from option no. 2, because requirements do not increase significantly when steam pressure is 40 bar as opposed to 16 bar.

Spare parts. The annual cost of spare parts is estimated at 7 percent of investment cost or Rs.355,000 per quarter at the beginning of operations (see Exhibit 2.b).

Other. Assumed to represent 2 percent/year of total project cost.

Energy Savings

Operating 85 percent of the time on wood and 15 percent of the time on oil, the boiler will consume 4,130 tonnes of wood per quarter and 155 tonnes of oil per quarter to account for turbine generator needs.

Electricity. The back pressure turbine will produce an estimated 414,000 kWh per quarter. The incremental electricity requirement (apart from the electricity generated by the new system) is 250,000 kWh per quarter, or Rs.576,000 per quarter at the beginning of operations.

Power. The incremental electricity requirement (apart from the electricity generated by the new system) is 250,000 kWh per quarter, or Rs.576,000 per quarter at the beginning of operations.

OPTION 4: NEW MULTIFUEL BOILER (WOOD/OIL) WITH EXTRACTION CONDENSING STEAM TURBINE

Option no. 4 differs from option no. 3 by the fact that the extraction condensing turbine produces significantly more electricity and therefore requires a larger boiler and entails higher fuel consumption. At maximum process steam demand (9.5 tph), the boiler would produce 12 tsh at 44 bar and produce 715 kW of which 135 kW from the first stage. At average steam demand (7.5 tph), the boiler would still produce 12 tsh at 44 bar, but generate up to 940 kW, as the condensing stage would produce about 500 kW.

Investment Costs

Total investment costs are estimated at Rs.64 million, of which Rs.9.5 million or 15 percent are earmarked for design and engineering (see Exhibit 2.a for detailed cost breakdown). The incremental cost for power generation over option 2 is then Rs.32.3 million, which corresponds roughly to U.S. $1,450/kW.

Operation and Maintenance Costs

We assumed no change from option no. 3. The annual cost of spare parts is 7 percent of total equipment costs or Rs.586,000 per quarter at the beginning of operation (see Exhibit 2.b).

Fuel Savings

Assuming that wood is used 85 percent of the time at an average efficiency of 72 percent and oil for the remainder of time with an 80 percent efficiency, fuel wood requirements increase to 6,863 tonnes per quarter and

oil requirements to 257 tonnes per quarter. In addition, the new system generates average electricity output of 1.62 GWh per quarter.

OPTION 5: NEW MULTIFUEL BOILER BURNING COAL AND OIL

This new multifuel boiler option is similar to option no. 2, as we assumed that the same system could be used to burn wood pellets and coal, depending on local availability and prices.

Investment Costs

Total investment cost for the coal option is estimated at Rs.31.5 million, or the same as option no. 2, of which Rs.5.4 million are earmarked for engineering and design (see Exhibit 2.a for detailed breakdown). Compared with the wood option, fuel handling and storage are cheaper but overall boiler cost is higher because of particulate (baghouse) and ash removal requirements.

Operation and Maintenance Costs

Identical to option no. 2 (see Exhibit 2.b).

Fuel Savings

Based on the 85/15 split for coal and oil firing, quarterly coal consumption would be 1,224 tonnes and quarterly oil consumption, 135 tonnes.

3 FINANCIAL ANALYSIS

In this chapter, we present our financial analysis of the five options for improving energy efficiency at the Sri Lanka Tyre Corporation's Kelaniya plant:

1. New oil-fired packaged boiler
2. New multifuel (wood/oil) boiler
3. New multifuel (wood/oil) boiler/back pressure steam turbine
4. New multifuel (wood/oil) boiler/extraction condensing steam turbine
5. New coal-fired boiler (stoker or fluidized-bed).

The purpose of the analysis is to evaluate the probable financial effect on SLTC of undertaking any of the five options and thereby assist SLTC's management in deciding on implementation. In addition, the analysis is intended to assist in designing an appropriate financial structure for a project and in acquiring necessary external financing.

In undertaking the financial analysis, we projected the incremental cash flows to SLTC from undertaking a project. Our projections are based on the expected technical performance of the project and incorporate detailed information on the timing and level of the cash outlays required and the subsequent cash returns and expenses associated with project operation. We conducted the financial analysis in current rupees and thus incorporated expected general inflation in the economy (at 10 percent annually) and real changes in the price levels of specific commodities (e.g., oil prices are expected to grow at a real rate of 2 percent annually or approximately 12 percent in nominal terms). Our analyses are made on a quarterly basis over a period beginning in the third quarter of 1984 and extending for 10 years through the second quarter of 1994. They incorporate relevant provisions of the Sri Lankan tax code and reflect institutional considerations regarding the availability and cost of debt financing.

To evaluate the expected financial performance of a project, we calculated conventional measures of performance, including the present value of after-tax cash flows (at a discount rate of 20 percent), the internal rate of return (i.e., the discount rate at which the present value of project after-tax cash flows equals zero), and the simple payback period (i.e., the length of time required for the cumulative cash flows associated with a project to become positive).

In addition to analyzing the expected financial effect of a project on SLTC, we also considered the current financial performance and condition of SLTC as a basis for understanding the likely ability of SLTC to finance the project.

In the following sections, we first discuss the financial and tax circumstances of SLTC. Next, we review the financial structure and financing requirements for each of the five project options. Finally, we present the results of our analyses of project performance, including sensitivity analyses on such parameters as the value of energy savings, project capital cost, and interest rate on project debt.

FINANCIAL AND TAX CIRCUMSTANCES OF THE CORPORATION

As described in the introduction to the feasibility study, SLTC is currently in good condition with regard to financial structure and liquidity; however, financial performance has deteriorated recently. As of December 31, 1983, the balance sheet contained no long-term liabilities and presented fixed assets valued at Rs.73.1 million, net of depreciation. The firm has net current assets of Rs.104.2 million and a current asset ratio of 2.7, indicating substantial asset liquidity.

The firm's profits, after-tax and before repatriation to the general and special reserves, were Rs.24.9 million in 1982 and Rs.15.3 million in 1981. However, a performance reversal was suffered in 1983, as the firm incurred a loss of Rs.1.2 million, after allowance for taxes. The firm has generated cash from operations of Rs.11.7 million in 1983, Rs.64.5 million in 1982, and Rs.21.4 million in 1981.

Although financial performance has deteriorated recently, SLTC's strong financial condition should enable it to obtain substantial debt financing for quality energy efficiency improvement projects.

At the firm's historical level of profitability, it pays income tax at the marginal rate of 50 percent.

FINANCIAL STRUCTURE AND PROJECT PERFORMANCE

On the basis of our review of SLTC's financial condition and discussions with SLTC financial officials and representatives of Sri Lankan financial institutions, we determined that SLTC should be able to achieve a relatively high degree of debt financing in undertaking an energy efficiency project. Accordingly, for our analyses, we assumed that projects would be financed with 60 percent debt and 40 percent cash equity. It is possible that the debt fraction of project financing could be higher than 60 percent; indeed, given SLTC's healthy balance sheet and recent cash generation performance, it may be able to obtain essentially 100 percent debt financing for a high quality energy efficiency project. In analyzing a project's financing

-12

requirements, we scheduled the equity contributions and debt funding so that the project maintains a 60 percent debt/40 percent equity structure throughout the development period to the beginning of project operation.

From our discussions with financial institutions, we determined that SLTC should be able to obtain credit at an interest rate of 14 percent, with a repayment period of up to 8 years following the beginning of project operation. It is also probable that SLTC will be able to obtain a moratorium on principal repayment during the first year of project operation. Accordingly, in our analyses, we used debt terms of a 14-percent interest rate, a 1-year principal payment moratorium, and an 8-year debt repayment period. Interest is accrued and paid during construction and the first year of project operation. Allowance for interest payments during the development period is included in the estimation of a project's total financing requirements.

The development period outlays and financing requirements for each of the five project options are summarized in Exhibit 3.a. The account "Engineering/Design Cost" includes the project design and engineering expenses and the startup expenses that are incurred during the beginning of a project's operation. We assumed that all of these costs could be expensed for tax purposes and accordingly would create a tax credit during the development period (i.e., we assumed that SLTC would be taxed at a 50 percent rate on marginal income and have sufficient income tax liability elsewhere to allow full, current deduction of the development period expenses and any operating period losses).* Project capital cost includes the cost of purchasing and installing the capital equipment and facility improvements required for a project. We assumed that 50 percent of these outlays could be depreciated over an 8-year period and the remaining 50 percent over a 4-year period. No capital outlays were expensed for tax purposes. All interest charges during project development were expensed.

Total project cost, excluding development period interest, varies from a low of Rs.13 million for option no. 1 (oil-fired packaged boiler) to a high of Rs.63.9 million for option no. 4 (multifuel boiler/extraction condensing steam turbine). Development period interest follows a similar pattern, ranging from a low of Rs.775 thousand for option no. 1 to Rs.4.9 million for option no. 4. All projects but option no. 1 involve a development period of 1.5 years; option no. 1 is the simplest and least expensive project and requires only 1.25 years for development. Project debt is 60 percent

*In light of the recent deterioration in SLTC's financial performance, this assumption may not be valid. Inability to deduct development period expenses as incurred would slightly reduce the financial performance of the five options. However, in no case would the effect be of major consequence. The financial quality of the projects does not materially depend on tax benefits.

EXHIBIT 3.a
SRI LANKA TYRE CORPORATION
DEVELOPMENT PERIOD OUTLAYS AND FINANCING REQUIREMENTS FOR THE FIVE PROJECT OPTIONS

Monetary Values In Current Rs(000) (i.e., values include general inflation at 10% p.a.)

PROJECT OPTIONS	OPTION #1 New oil fired boiler	OPTION #2 New multi-fuel boiler burning wood and oil	OPTION #3 New multi-fuel boiler burning wood and oil with cogeneration (back-pressured turbine)	OPTION #4 New multi-fuel boiler burning wood and oil with cogeneration (condensing turbine)	OPTION #5 New multi-fuel boiler burning coal and oil
DEVELOPMENT BEGINS	3q/1984	3q/1984	3q/1984	3q/1984	3q/1984
OPERATIONS BEGIN	4q/1985	1q/1986	1q/1986	1q/1986	1q/1986
ENG/DESIGN COST	1228	5527	7085	9459	5416
CAPITAL COST	11780	26066	35815	54463	26065
TOTAL DIRECT COST	13007	31592	42900	63922	31481
DEVELOPMENT PERIOD INTEREST	775	2205	2866	4874	2205
TOTAL DEVELOPMENT PERIOD FINANCING REQUIRED	13782	33797	45766	68796	33686
DEBT REQUIRED	8269	20278	27460	41278	20212
EQUITY CONTRIBUTED	5513	13519	18307	27518	13474

NOTE: Totals may not agree with the sum of components due to rounding error.

SOURCE: Hagler, Bailly & Co.

of total development period outlays and varies from Rs.8.2 million for option no. 1 to Rs.41.3 million for option no. 4. The required equity contribution at the 40 percent equity structure varies from Rs.5.5 million to Rs.27.5 million (for a more detailed delineation of the development period outlays and analysis of financing requirements by quarter, see the Development Period Financial Summary for each of the project options in Appendix E).

FINANCIAL ANALYSIS OF PROJECT PERFORMANCE

We undertook a detailed cash flow analysis for each of the five project options (see Exhibit 3.b). All five options exhibit good financial returns with options no. 1, no. 2 (multifuel boiler), no. 3 (multifuel boiler/back pressure steam turbine), and no. 5 (coal-fired boiler) providing very high returns. The internal rates of return for options no. 1, no. 2, no. 3, no. 4 and no. 5 are 98.1 percent, 63.7 percent, 53.1 percent, 35.3 percent, and 68.9 percent respectively. Option no. 5 achieves the highest present value of project net cash flows at Rs.24.3 million, followed by option no. 2 at Rs.21.3 million and option no. 3 at Rs.20.1 million. Thus, although option no. 1 has the highest return per rupee invested, options no. 5, no. 2, and no. 3 achieve higher valued returns because of their higher capitalization and gross project benefits.

With respect to simple payback, or the period from the beginning of project outlays until cumulative cash flow becomes positive, option no. 1 is also highly sucessful: cumulative cash flow becomes positive in the third quarter of 1986 or only 9 quarters following the beginning of project outlays in the third quarter of 1984. Options no. 5, no. 2, and no. 3 follow closely on the performance of option no. 1, achieving simple payback in the first quarter of 1987 (11 quarters), second quarter of 1987 (12 quarters), and third quarter of 1987 (13 quarters), respectively. Option no. 4 achieves payback somewhat later in the second quarter of 1988 (16 quarters).

None of the projects incur negative cash flow during the operating period, which would jeopardize the ability to make timely debt payments. For further details on the financial performance of the five project options, see Exhibit 3.b and the quarterly cash flow statements for each project in Appendix E.

In addition to the base or expected case analysis, we performed sensitivity analyses of the five options to examine the effect on project financial performance of changes in such parameters as the value of energy savings (plus and minus 10 percent), project capital costs (plus and minus 10 percent), and the interest rate on debt (plus and minus 2 points). The sensitivity analyses for the five options are summarized in Exhibit 3.c. These analyses indicate that options no. 1, no. 2, and no. 5 continue to exhibit superior financial performance under all the cases analyzed. The lowest internal rates of return for options no. 1, no. 2, and no. 5 are 89.9 percent, 52.5 percent, and 58.1 percent, respectively. In each case, the lowest

EXHIBIT 3.b
SRI LANKA TYRE CORPORATION
FINANCIAL PERFORMANCE FOR THE FIVE PROJECT OPTIONS

Monetary Values In Current Rs(000) (i.e., values include general inflation at 10% p.a.)

PROJECT OPTIONS	OPTION #1 New oil fired boiler	OPTION #2 New multi-fuel boiler burning wood and oil	OPTION #3 New multi-fuel boiler burning wood and oil with cogeneration (back-pressured turbine)	OPTION #4 New multi-fuel boiler burning wood and oil with cogeneration (condensing turbine)	OPTION #5 New multi-fuel boiler burning coal and oil
DEVELOPMENT BEGINS	3q/1984	3q/1984	3q/1984	3q/1984	3q/1984
OPERATIONS BEGIN	4q/1985	1q/1986	1q/1986	1q/1986	1q/1986
LAST ANALYSIS PERIOD	2q/1994	2q/1994	2q/1994	2q/1994	2q/1994
TOTAL DEVELOPMENT PERIOD OUTLAY (includes interest during development)	13782	33797	45766	68796	33686
PRESENT VALUE OF AFTER TAX CASH FLOW AT 20%	18973	21344	20095	12655	24296
INTERNAL RATE OF RETURN ON AFTER TAX CASH FLOW	98.1%	63.7%	53.1%	35.3%	68.9%
QUARTER IN WHICH CUMULATIVE CASH FLOW BECOMES POSITIVE	3q/1986	2q/1987	3q/1987	2q/1988	1q/1987
NUMBER OF QUARTERS FROM BEGINNING OF OUTLAYS TO SIMPLE PAYBACK	9	12	13	16	11
CUMULATIVE CASH FLOW FOR ANALYSIS PERIOD	58521	74725	75813	65185	82468
NUMBER OF OPERATING PERIOD QUARTERS WITH NEGATIVE CASH FLOW	0	0	0	0	0
AFTER TAX CASH FLOW IN: 4q/1986	1282	2028	2292	2509	2229
2q/1989	1679	2289	2473	2477	2513
4q/1991	2020	2711	2802	2561	2953
2q/1994	2623	3635	3731	3421	3897

N/M: NOT MEANINGFUL

SOURCE: Hagler, Bailly & Co.

EXHIBIT 3.c
SRI LANKA TYRE CORPORATION
SENSITIVITY ANALYSIS SUMMARY FOR THE FIVE PROJECT OPTIONS

Monetary Values In Current Rs(000) (i.e., values include general inflation at 10% p.a.)

PROJECT OPTIONS	OPTION #1 New oil fired boiler	OPTION #2 New multi-fuel boiler burning wood and oil	OPTION #3 New multi-fuel boiler burning wood and oil with cogeneration (back-pressured turbine)	OPTION #4 New multi-fuel boiler burning wood and oil with cogeneration (condensing turbine)	OPTION #5 New multi-fuel boiler burning coal and oil
BASE CASE					
- NPV OF CASH FLOW	18973	21344	20695	12655	24296
- IRR	98.1%	63.7%	53.1%	35.3%	68.9%
- PAYBACK QUARTER	3q/1986	2q/1987	3q/1987	2q/1988	1q/1987
ENERGY SAVINGS 10% HIGHER THAN BASE					
- NPV OF CASH FLOW	21492	28037	27617	22343	30990
- IRR	105.9%	73.9%	62.5%	44.6%	78.7%
- PAYBACK QUARTER	3q/1986	1q/1987	2q/1987	4q/1987	4q/1986
ENERGY SAVINGS 10% LESS THAN BASE					
- NPV OF CASH FLOW	16455	14650	12574	2967	17602
- IRR	89.9%	52.5%	42.6%	24.1%	58.1%
- PAYBACK QUARTER	3q/1986	3q/1987	1q/1988	1q/1989	2q/1987
CAPITAL COSTS 10% HIGHER THAN BASE					
- NPV OF CASH FLOW	18427	20109	18420	10093	23064
- IRR	90.9%	58.8%	58.2%	31.6%	63.7%
- PAYBACK QUARTER	3q/1986	2q/1987	3q/1987	3q/1988	2q/1987
CAPITAL COSTS 10% LESS THAN BASE					
- NPV OF CASH FLOW	19519	22578	21771	15217	25528
- IRR	106.5%	69.3%	58.2%	39.4%	74.9%
- PAYBACK QUARTER	3q/1986	1q/1987	2q/1987	1q/1988	1q/1987
INTEREST RATES 2 PTS HIGHER THAN BASE					
- NPV OF CASH FLOW	18748	20818	19388	11574	23773
- IRR	97.2%	62.8%	52.1%	34.1%	68.0%
- PAYBACK QUARTER	3q/1986	2q/1987	3q/1987	2q/1988	1q/1987
INTEREST RATES 2 PTS LESS THAN BASE					
- NPV OF CASH FLOW	19189	21846	20773	13688	24797
- IRR	98.9%	64.6%	54.0%	36.4%	69.7%
- PAYBACK QUARTER	3q/1986	1q/1987	3q/1987	2q/1988	1q/1987

NPV: NET PRESENT VALUE AT A DISCOUNT RATE OF 20%.
IRR: INTERNAL RATE OF RETURN.
PAYBACK QUARTER: QUARTER IN WHICH CUMULATIVE CASH FLOW BECOMES POSITIVE.

SOURCE: Hagler, Bailly & Co.

returns are achieved when the value of energy savings/sales is 10 percent less than expected. The highest returns achieved are 106.5 percent for option no. 1, 73.9 percent for option no. 2, and 78.7 percent for option no. 5. Option no. 3 exhibits respectable returns, which vary from 42.6 percent to 62.5 percent. The returns for option no. 4 range from 24.1 percent to 44.6 percent, falling markedly short of the strong performance of options no. 1, no. 2, and no. 5.

With respect to the present value of project net cash flow, option no. 5 is uniformly superior by a substantial margin. However, option no. 2's performance, which was better than that of option no. 1 in the base case analysis, falls short of option no. 1's performance when the net value of energy savings is 10 percent less than the base analysis (attributable to changes in both the value of energy consumed and saved). The present value of cash flow remains positive for all options over all the sensitivity analyses.

With respect to the effect of the sensitivity analyses on the project payback, the variation in payback period is not greater than plus or minus three quarters for all options.

As a result of these analyses, we recommend that SLTC consider the installation of a multifuel boiler capable of burning coal and oil or wood and oil, depending on the price and availability of the fuels. These fuel combinations correspond to our analysis options no. 5 and no. 2. Option 5 consistently has the highest present value of project net cash flow. Except when the value of energy savings is 10 percent less than expected, option no. 2 also achieves a higher present value of net cash flow than option no. 1. Although the internal rates of return for options no. 2 and no. 5 are somewhat lower than for option no. 1, they are still very high by any financial standards at 63.7 percent and 68.9 percent, respectively.

4 ECONOMIC ANALYSIS

In addition to evaluating the probable financial performance of the five options for improving energy efficiency at SLTC's Kelaniya plant, we also evaluated the probable effects of the five options from the perspective of the Sri Lankan economy. This evaluation encompassed two analyses: an evaluation of the costs and benefits to Sri Lankan society of undertaking the efficiency improvements and an analysis of the options' foreign currency requirements.

Evaluating projects by a social cost/benefit analysis is important for understanding the general economy-wide effects of a project (as opposed to the financial effects on SLTC). In undertaking the social cost/benefit analysis, we considered only the real economic costs and benefits to Sri Lanka and, as a result, did not account for such items as tax and tariff payments (which are only transfer payments within the Sri Lankan economy and do not represent a real cost of using a productive resource). In addition, it is possible that the cost to the economy of using a productive resource differs from the cost to a firm. For example, if the labor required for an efficiency project is supplied from a pool of previously unemployed people, then the cost to the economy of using that labor, as measured by the production value in an alternative application (i.e., unemployment), may be considerably less than the price paid by a firm in using the labor.

Another price for which the social value is usually different from the firm's price is the price of capital, or the cost of deferring current consumption in return for (presumed) increases in future income and consumption. In a financial analysis, the price of capital is accounted for in the interest cost of debt and the firm's required return on equity. However, in a social cost/benefit analysis, the appropriate measure of the cost of deferring current consumption is the social discount rate, which for many societies is less than the private price of capital. As a result of these differences, the social cost/benefit evaluation of a project may differ significantly from the firm's financial evaluation of that project.

The foreign currency effects of an energy efficiency improvement project are also important. If a project has a large net requirement for foreign currency, implementation of the project may contribute to a deterioration in the country's terms of trade with other countries. Such a deterioration will increase the quantity of a country's own goods and services that must be exchanged in importing a fixed quantity of goods and services from other countries and will generally reduce the value of goods and services that may be produced and purchased by an economy on a current basis.

In contrast, if a project is a large net generator of foreign currency (i.e., if it increases exports or reduces import requirements), it will generally improve the terms of trade and lead to a higher value of production and consumption in the economy. Energy efficiency projects often have a beneficial effect on foreign currency requirements because such projects often reduce the consumption of imported oil or substitute consumption of a locally available energy resource (e.g., wood) for imported oil. Again, because of the difference in perspective and analytic methods, the evaluation of the foreign currency effects of competing projects may differ from their financial evaluation.

To illustrate the importance and potential use of the social cost/benefit and foreign currency requirements analyses, consider the following example. Because the results of a social cost/benefit and foreign currency requirements analysis may differ from those of a financial analysis, a country may find that one project preferred by a firm is less advantageous from the social perspective than another project. In this case, the country might wish to subsidize the return provided by the more socially advantageous project to induce the firm to adopt that project instead of pursuing the more financially lucrative project.

In the following sections, we present our social cost/benefit analyses of the five options for improving energy efficiency and then review the foreign currency requirements of each option.

SOCIAL COST/BENEFIT ANALYSIS

An important difference between the social cost/benefit analysis and the financial analysis is that we used constant or uninflated values (as of mid-1984) in the former and current or inflated values in the latter. Accordingly, the values for specific accounts are not strictly comparable except in 1984. Numerically, constant and current values differ in that all current values have a general inflation rate of 10 percent. Certain account values are assumed to have real growth rates other than zero (i.e., the current values for these accounts will grow at a rate other than 10 percent). These accounts and their real growth rates are: oil, 2 percent; and coal, 1 percent. Although the market price of electricity is assumed to have a real growth rate of 2 percent, the real growth rate of the social value is assumed to be zero (see below).

As appropriate, in undertaking the social cost/benefit analysis, we substituted social values for the market or posted values that were used in the financial analysis. The following adjustments were applied to estimate the social values:

- **Imported oil.** The incremental value of imported oil to the Sri Lankan economy depends on whether the oil reduces or increases consumption of residual oil, which is currently in excess supply from domestic refining and must be exported.

Thus, the social value of imported oil (Rs.3,602 per tonne, fourth quarter 1984) is approximately 25 percent less than the current posted price (Rs.4,922 per tonne, fourth quarter 1984).

- **Wood.** Based on discussions with the Forestry Department and the State Timber Corporation, it appears that more wood will be available from Mahaweli clearings than the market can absorb, at least until 1990. Because the quantities are large and cannot be stored for more than 6-8 months, industrial users are prime candidates for this fuel. We thus considered the opportunity cost of fuelwood to industry to be the cost of removal from the site, loading, transportation, unloading, and preparation. Based on the above discussions, this total cost is about Rs.500/tonne. After 1990, this opportunity cost will equal the cost of producing fuel wood (eucalyptus or Ipil-Ipic) from plantations plus delivery and preparation. This cost is currently assumed to be Rs.700/tonne for delivery at Kelaniya.

- **Coal.** The opportunity cost of coal is the border price (U.S. $50/tonne) plus the cost of unloading and transportation (U.S. $5/tonne) on the average). Consequently, the shadow price of coal is RS.1,347.5/tonne (85 percent of market).

- **Electricity.** On the basis of discussions with representatives of the Sri Lanka Ministry of Power and Energy, we set the social value of electricity at Rs.3.5, which is 75 percent higher than the current market price. The social value does not change in real terms.

- **Other imported goods and services.** Other imported goods and services were valued at their purchase price less any tariff.

- **Other domestically provided goods and services.** Other domestically provided goods and services (e.g., labor) were valued at 90 percent of the local price.

- **Price of capital.** A real social discount rate of 10 percent was used in the analysis.

On the basis of our social cost/benefit analysis, we found that option no. 4, a new multifuel boiler burning wood and oil with a condensing turbine for cogeneration, achieved the highest present value of net social benefits (Rs.33.6 million, 1984), followed closely by option no. 2, a new multi-fuel boiler burning wood and oil, (Rs.32.6 million, 1984), and somewhat more distantly by option no. 1, a new oil-fired boiler (Rs.23.1 million, 1984). The present values of net social benefits for option no. 3, multifuel boiler burning wood and oil with a backpressured turbine, and option no. 5,

multifuel burning coal and oil, are substantially lower: respectively Rs.9.5 million, 1984 and Rs.5.6 million, 1984 (see Exhibit 4.a).

When we compared the ratio of undiscounted operating period net benefits to undiscounted development period net outlays, however, we achieve a different result. Specifically, option no. 1 has the highest benefit/cost ratio at 4.7, followed by option no. 2 at 3.4 and option no. 4 at 2.6. Similarly, option no. 1 was the first to achieve positive cumulative net social benefits, in the third quarter of 1987, followed by option no. 2 in the third quarter of 1988 and option no. 4 in the first quarter of 1989. Again, option no. 3 and option no. 5 have much lower benefit/cost ratios and later "breakeven" points than the other options. (For more information on the social cost/benefit analysis of the five project options, see Appendix E).

We found that option no. 2 was consistently superior to option no. 5 from the social cost/benefit perspective, unlike the results of our financial analysis in which option no. 5 was superior. The reason for this difference is that option no. 2 involves consumption of wood, a domestically produced resource with a social value that is less than its purchase price, while option no. 5 uses coal, which is imported and for which the social value is not less than the purchase price. The substantial improvement of the economic performance of option no. 4 relative to its financial performance results from its use of a local resource, wood, for energy production and its high net generation of electricity (1.37 million kWh per quarter), which has a social value that is much higher than its market price.

FOREIGN CURRENCY REQUIREMENTS ANALYSIS

To analyze the foreign currency effects of each project, we first estimated the foreign currency content of each project's cash flow account. These values are summarized in Exhibit 4.b. Next, we used these values, together with the cash accounts from the financial analysis, to develop foreign currency use/displacement accounts for each of the project options. Like the financial analysis, the foreign currency requirements analysis was done in current rupees (i.e., including the effects of general inflation). Accordingly, the foreign currency use/displacement values reflect the actual monetary flows that would be expected if a project were undertaken.

On the basis of this analysis, we found that all of the projects are net generators of foreign currency. That is, the foreign currency saved by importing less oil exceeds the foreign currency needed to purchase project equipment and to cover other project costs. Option no. 4 and achieves the highest present value (at a discount rate of 10 percent) of net reduction in foreign currency requirements, Rs.164 million, followed by option no. 2 (Rs.143 million), no. 3 (Rs.141 million), no. 5 (Rs.86 million), and no. 1 (Rs.60 million). It is not surprising that options no. 4, no. 2, and no. 3 achieve a higher performance than options no. 1 and no. 5. Options no. 2, no. 3, and no. 4 involve both a reduction in energy use and a substitution

EXHIBIT 4.a
SRI LANKA TYRE CORPORATION
SOCIAL COST/BENEFIT ANALYSIS FOR THE FIVE PROJECT OPTIONS

Monetary Values In Constant Rs(000) at mid 1984

PROJECT OPTIONS	OPTION #1 New oil fired boiler	OPTION #2 New multi-fuel boiler burning wood and oil	OPTION #3 New multi-fuel boiler burning wood and oil with cogeneration (back-pressured turbine)	OPTION #4 New multi-fuel boiler burning wood and oil with cogeneration (condensing turbine)	OPTION #5 New multi-fuel boiler burning coal and oil
DEVELOPMENT BEGINS	3q/1984	3q/1984	3q/1984	3q/1984	3q/1984
OPERATIONS BEGIN	4q/1985	1q/1986	1q/1986	1q/1986	1q/1986
LAST ANALYSIS PERIOD	2q/1994	2q/1994	2q/1994	2q/1994	2q/1994
TOTAL DEVELOPMENT PERIOD COSTS	12361	29933	38442	55187	29933
TOTAL OPERATING PERIOD BENEFITS	58277	102685	76246	141383	58665
PRESENT VALUE OF NET SOCIAL BENEFITS AT 10%	23059	32601	9565	33634	5626
OPERATING PERIOD NET BENEFITS/DEVELOPMENT PERIOD NET COSTS	4.71	3.43	1.98	2.56	1.96
QUARTER IN WHICH CUMULATIVE NET BENEFITS BECOME POSITIVE	3q/1987	3q/1988	1q/1990	1q/1989	3q/1990
CUMULATIVE NET BENEFITS FOR ANALYSIS PERIOD	45916	72752	37804	86196	28732
NET BENEFITS					
IN: 4q/1986	1555	2826	2273	4454	1467
2q/1989	1637	3137	2496	4658	1653
4q/1991	1724	2888	1905	3500	1849
2q/1994	1815	3231	2152	3726	2056

N/M: NOT MEANINGFUL

SOURCE: Hagler, Bailly & Co.

EXHIBIT 4.b
SRI LANKA TYRE CORPORATION
FOREIGN CURRENCY CONTENT OF SPECIFIC ACCOUNTS FOR THE FIVE PROJECT OPTIONS
Foreign Content in Percent

PROJECT OPTIONS ACCOUNT	OPTION #1 New oil fired boiler	OPTION #2 New multi-fuel boiler burning wood and oil	OPTION #3 New multi-fuel boiler burning wood and oil with cogeneration (back-pressured turbine)	OPTION #4 New multi-fuel boiler burning wood and oil with cogeneration (condensing turbine)	OPTION #5 New multi-fuel boiler burning coal and oil
ENG/DESIGN COST	50.00	72.30	76.30	67.70	72.30
CAPITAL COST	57.10	63.20	68.00	65.80	63.20
OPERATING AND MAINTENANCE EXPENSE	77.00	67.40	67.20	69.26	67.40
OIL SAVED	90.00	90.00	90.00	90.00	90.00
ENERGY CONSUMED IN PLACE OF OIL (if relevant)	N/R	WOOD 0.00	WOOD 0.00	WOOD 0.00	COAL 90.00
ENERGY PRODUCED (if relevant)	N/R	N/R	ELECTRICITY 70.00	ELECTRICITY 70.00	N/R

N/R: NOT RELEVANT

SOURCE: Hagler, Bailly & Co.

of locally produced wood for imported oil; options no. 1 and no. 5 reduce energy use but do not substitute local fuels for imports (see Exhibit 4.c).

In calculating the ratio of the undiscounted reduction in foreign currency requirements in the operating period to the undiscounted requirement for foreign currency in the development period, we found that option no. 1 ranked highest at 15.4, followed by options no. 2 (13.2), no. 3 (9.0), no. 5 (8.7), and no. 4 (8.2). Option no. 1 benefits by having the highest financial performance (as indicated by previous measures such as internal rate of return), by not involving a substitution of one imported fuel for another (as does option no. 5), and by not requiring a project shakedown period during which operating fuel is consumed without displacing the current use of imported oil (as do the remaining four options). As a result, option no. 1 is again the first to break even; it achieves a negative account on cumulative net requirements for foreign currency in the third quarter of 1986. Option no. 1 is followed by option no. 2 in the first quarter of 1987, and options no. 3, no. 4, and no. 5 in the third quarter of 1987. For more detailed information on the foreign currency requirements analysis, see the foreign currency requirements portion of Appendix E).

EXHIBIT 4.c
SRI LANKA TYRE CORPORATION
FOREIGN CURRENCY REQUIREMENTS ANALYSIS FOR THE FIVE PROJECT OPTIONS

Monetary Values In Current Rs(000) (i.e. values include general inflation at 10% p.a.)
Positive values indicate use of foreign currency.
Negative values indicate generation of foreign currency.

PROJECT OPTIONS	OPTION #1 New oil fired boiler	OPTION #2 New multi-fuel boiler burning wood and oil	OPTION #3 New multi-fuel boiler burning wood and oil with cogeneration (back-pressured turbine)	OPTION #4 New multi-fuel boiler burning wood and oil with cogeneration (condensing turbine)	OPTION #5 New multi-fuel boiler burning coal and oil
DEVELOPMENT BEGINS	3q/1984	3q/1984	3q/1984	3q/1984	3q/1984
OPERATIONS BEGIN	4q/1985	1q/1986	1q/1986	1q/1986	1q/1986
LAST ANALYSIS PERIOD	2q/1994	2q/1994	2q/1994	2q/1994	2q/1994
FOREIGN CURRENCY REQUIRED IN DEVELOPMENT PERIOD	7764	22159	34549	45456	22078
FOREIGN CURRENCY REQUIRED IN OPERATING PERIOD	-119793	-292456	-311464	-372370	-192875
PRESENT VALUE OF FOREIGN CURRENCY REQUIREMENT AT 10%	-60247	-142523	-140899	-163898	-86193
OPERATING PERIOD REDUCTION IN FOREIGN CURRENCY REQUIREMENT/ DEVELOPMENT PERIOD FOREIGN CURRENCY REQUIREMENT	15.43	13.20	9.02	8.19	8.74
QUARTER IN WHICH CUMULATIVE FOREIGN CURRENCY REQUIREMENT BECOMES NEGATIVE	3q/1986	1q/1987	3q/1987	3q/1987	3q/1987
CUMULATIVE FOREIGN CURRENCY REQUIREMENT FOR ANALYSIS PERIOD	-112029	-270297	-276915	-326914	-170797
FOREIGN CURRENCY USE IN: 4q/1986	-2179	-5355	-5571	-6609	-3362
2q/1989	-2983	-7375	-7801	-9304	-4788
4q/1991	-4054	-10083	-10798	-12933	-6724
2q/1994	-5481	-13701	-14803	-17790	-9339

SOURCE: Hagler, Bailly & Co.

EXECUTIVE SUMMARY

This report details savings from reducing energy consumption at the Sri Lanka Tyre Corporation. Savings estimates are based upon the findings of an energy audit training program conducted under joint sponsorship by EDMAC and USAID in March, 1984.

Potential savings identified in this report, excluding replacement of the boiler plant*, represent 6.82 million Rupees based upon current marginal costs. The energy use reduction is equivalent to 15.9% of the 1983 energy usage. Capital costs required to implement the recommended changes are estimated to be 2.64 million Rupees, giving a simple payback of 0.4 years for the program. A summary of the savings is shown in Exhibit 1.

The training program began with a classroom session, lasting two days. The purpose of this session was to instruct course participants in the use of portable instrumentation, and in the data collection and test procedures. During eight days of site work, the engineers were responsible for testing the wide range of equipment within the plant, including the boiler and ancillary equipment, calender dryers, process equipment, motors and ventilation systems.

The balance of the training program was held in the classroom and consisted of the analysis of the collected data, formulation of energy conservation strategies, and calculation of the savings possible by implementation of the recommended measures. This session lasted a further twelve days.

The energy savings mentioned above and discussed in detail in the report can be achieved by implementation of projects identified during the course of the audit and data analysis.

*Boiler plant replacement would save a further 10.6 million Rupees or 33.6% of the energy use at the Tyre Company. The boiler replacement scheme is the subject of an associated feasibility study and hence no costs relating to this measure are presented in this report.

In order to identify the areas where improvement in energy utilization are possible, the plant was analyzed in the following manner:

A visual inspection of the plant was conducted to familiarize the auditors with the basic layout of the plant, and to identify the most obvious sources of waste. This was followed by the collection of readily available energy related data.

This Preliminary Energy Audit (PEA) included collection of the following types of information:

- energy use by fuel type and source delivered
- energy costs
- inventory of major energy consuming equipment in the plant
- operating schedules for the major departments in the plant
- details on current energy management programs
- information on energy conservation projects being considered, underway, or previously implemented

The PEA data was used to develop a plan for the instrumented testing of major energy consuming process equipment. This equipment was then tested to determine the level of energy waste and the amount of energy that could be usefully recovered.

To ensure full audit coverage of the plant, the plant was divided into a number of discrete areas. Each team of audit engineers was responsible for conducting tests on equipment in each of the areas. The areas were:

- boiler plant, steam distribution and condensate return systems
- electrical distribution and motors
- lighting and environmental systems
- compressed air system
- chilled water plant
- compounding department
- Tyre Building
- calendering department
- vulcanization department

Reliance Energy Services

EXHIBIT 1

ITEM	ENERGY DATA: ENERGY SAVED GJ*	ENERGY DATA: COST SAVED Rs	ENERGY DATA: % OF SAVINGS JG*	ENERGY DATA: % OF SAVINGS Rs	COST DATA: TOTAL COST	COST DATA: SIMPLE PAYBACK YEARS
1. Reduce Blowdown	6107	703,465	4.5	4.0	5,000	-
2. Steam Pipe Insulation	7890	908,849	5.8	5.2	850,000	0.9
3. Steam Leaks	11196	1,289,667	8.2	7.4	200,000	0.2
4. Steam Traps	1261	145,255	0.9	0.8	60,000	0.4
5. Return Condensate	11526	1,327,680	8.5	7.6	25,000	-
6. Power Factor Con.	508KVA	548,640	-	3.1	325,200	0.6
7. Compressed Air Leaks	1661	682,854	1.2	3.9	100,000	0.1
8. Reservoir Vol. Red.	94	38,644	0.1	0.2	15,000	0.4
9. Insul. of Boiler	2954	340,271	2.2	2.0	266,913	0.8
10. Replace Boilers	(92365)	(10,639,524)	67.9	60.9	NA	-
11. Reschedule Depts.	400KVA	432,000	-	2.5	NA	-
12. M G Set Replace	625	260,871	0.5	1.5	375,000	1.4
13. Chillers	348	143,216	0.3	0.8	420,000	2.9
Totals Excluding Boiler	43,672	6,821,412				
Totals Including Boiler	136,037	17,460,936	100.0	100.0	2,642,113**	

*GJ = 10^9 Joules

**Does Not Include Cost For Boiler Replacement

These areas comprise the major process and service functions within the plant.

Analysis of the data collected enabled identification of the potential for energy conservation. This was followed by the formulation of strategies to achieve the energy savings. Each strategy was then further analyzed to estimate the implementation cost required to achieve the savings.
The analysis of implementation and cost savings permit the development of an energy conservation action plan.

The major findings and recommendations of the study are as follows:

- Electricity is used to provide motive power, compressed air, chilled water and environmental services. It accounts for about 17% of the energy use at SLTC.

- Fuel Oil is used for steam generation in boiler plant. The steam is used for process heating and drying. Fuel oil consumption represents about 83% of the energy use at the plant.

- As a cost item, electricity forms 46% of the energy bill, fuel oil 54%.

- Improvements are needed in the existing energy management program to ensure conservation opportunities are implemented. The improvements include:

  - Hiring a full time employee to assist Mr. P. P. Subasinghe. The duties of the assistant should be confined to energy management, and in the short term focus upon implementing measures with short payback periods. In the longer term he should be responsible for conducting energy analysis on an on going basis.

  - Purchase of instrumentation to support conservation activities including a combustion analysis kit, water test kit, and an electrical equipment test kit.

- Developing a new energy monitoring system to evaluate energy use on a departmental basis, that will permit energy costs to be assigned by use rather than as overhead.

- Determining an energy consumption index that accurately reflects energy usage within SLTC. The existing index of energy consumption per standard type is inadequate and does not track energy efficiency within the plant accurately. Separate indices should be developed for electricity and fuel oil.

- Establishing an energy awareness program for all employees, including posters highlighting conservation methods, distributing information on the cost of energy wastage, possible extension of the incentive schemes given to boiler operators to include other production departments based upon their ability to save energy.

o Improvements in energy utilization at STLC can be made to reduce energy use close to 49%, under existing operating schedules and production output if measures identified in this report are implemented. The measures identified include replacing the existing boiler plant. This item is subject of a separate feasibility study and costs etc. are not discussed here. Potential savings of about 34% of energy use at SLTC can be saved. Efficiency tests showed the boiler efficiency to be 54.1%. The existing plant is in a poor state of repair and near the end of its useful life. Because of this, major capital expenditure which would be necessary to improve the efficiency of the plant is not recommended.

o In the short term, significant energy savings can be made with the plant by reducing the amount of water blown down from the boiler drums. Blow down is done to reduce the level of total dissolved solids (TDS) in boiler water to prevent scaling of the heat transfer surfaces. Currently TDS levels of 175 ppm are maintained as against international standards of 3500 ppm. Little investment is required to implement this measure. Instrumentation for monitoring TDS on a

daily basis can be purchased for approximately Rs5000 and blowdown rates adjusted accordingly by the boiler operators.

- o A major improvement is required in the operation and maintenance of the steam distribution and condensate return system. Areas for improvement include:
  - insulation
  - repair of leaks
  - repair of steam traps
  - returning condensate to the boiler

  Estimated savings from the rehabilitation of the steam system are 11.6% of the energy use in 1983. All measures are relatively easy to implement, requiring investment of approximately Rs1.1 million, including costs for supply of material and labor to install new materials.

- o Overall plant power factor was measured at 0.8. By raising this to 0.95, electrical demand savings would be in excess of Rs500,000 per annum. This measure requires the installation of power factor correction equipment, either static capacitors or using synchronous motors. Estimated capital costs are Rs325,000.

- o The compressed air system is in a similar state of repair to the steam distribution system. There are numerous leaks around the system and compressed air is used indiscriminately for comfort cooling by the employees. Savings of Rs680,000 are possible through repairing leaks.

- o Electrical consumption can be reduced by implementation of the following measures:
  - reducing the chilled water reservoir volume
  - replacing ac-dc motor generator sets with thyristor drives
  - installing a cooling tower to recirculate condensor water

A total savings of about Rs442,000 is possible for an estimated expenditure of Rs810,000. Implementation will require the purchase of the necessary replacement thyristors and design, purchase and installation of a suitable cooling tower.

As a first step in implementing the measures identified, a three-phase action plan has been developed. The plan, shown in Exhibit 2, is based upon the relative cost benefits and ease of implementation associated with each measure.

Appendix B DETAILED RESULTS OF STEAM SYSTEM AUDIT

2.2 Energy Utilization

2.2.1 Boiler Plant

The boiler plant consists of three watertube boilers of Russian manufacture. The boilers are each rated to produce 6.5 tonnes of steam per hour at a pressure of 16 bar. In normal operation, one boiler operates at high fire, one at low to medium fire, and the third is under maintenance. Duty is rotated every six months. The average steam demand is of the order of 7.5 tonnes per hour, with instantaneous peaks up to 10 tonnes occuring for periods of less than two minutes. In a normal work week, the boilers are fired at 0430 Monday morning and continue operation until all processing is completed on Sunday morning.

The boilers fire fuel oil with a viscosity of 1000 seconds. Fuel oil is obtained from Ceylon Petroleum Corporation (CPC).

The Boiler plant is in generally poor condition owing to a number of factors. The main cause is the apparent lack of regular and formal preventive maintenance procedures. This is compounded by the difficulty in obtaining spare parts for the boiler and ancillary systems.

The overall boiler plant efficiency is estimated to be 54.1% for both boilers firing at the time of the test. This was determined by measurement of fuel and feedwater flow rates for both boilers. An attempt was made to measure combustion efficiency using chemical analysis, but these results are not reliable. The high degree of smoking by the boilers necessitated the approach taken. Measurements taken with a Bacharach True-Spot Smoke Tester showed the smoke number of be in excess of 9 on a scale of 1 to 9, on all firing rates for both boilers. This was observed even when the combustion air dampers were adjusted to provide maximum combustion air.

A number of factors contribute to the poor efficiency of the boiler plant. The fuel oil is heated to 110°C prior to firing, but even though this temperature is recommended by CPC, it is evidently too low.

The boiler burners are of the pressure jet type, with steam atomization. Each boiler employs two burners. The burner housings are in poor condition, being bent and distorted. This causes uneven distribution of oil with respect to primary and secondary combustion air supply. The burners overfire and the flame impinges on the back wall of the combustion chamber, causing soot deposit.

The burners are manually controlled. Observation of plant practice indicated that only the oil flow is adjusted when the firing rate changes; the combustion air supply is not adjusted. In addition, only one of the two burners is adjusted, causing uneven firing.

The boiler brickwork is also in poor condition, showing signs of deterioration by acid corrosion. This is due to the high sulphur content of the fuel oil fired and the soot depositing on the brickwork.

The incomplete combustion and uneven firing causes soot buildup and pressurization within the combustion chamber. As a result, the relief vent is permanently open. In addition, sootblowing must occur every four hours to remove soot deposit buildup. The boilers are not well-insulated. The boiler shell itself is bent and distorted. In addition, there are numerous steam leaks and leaking valves in the boiler plant. Many pipes have missing or damaged insulation.

Makeup water is supplied from the pumping plant located at the river. The water is softened by base exchange. At the time of the plant visit, no condensate was being returned to the boiler and 100% makeup water was being used. Feedwater is supplied from a deaerator, which heats the water to 88°C. This temperature is not high enough to ensure removal of dissolved oxygen. Feedwater is pumped to the boiler using an electric pump. A steam driven feedwater pump is used during power outages; because this pump is undersized it cannot be used except during these times.

Tests of total dissolved solids (TDS) levels in the boiler feedwater indicate that the boilers are being blowndown too frequently. The company

should purchase a conductivity meter to measure boiler TDS and blowdown only when necessary.

The boilers are each fitted with economizers for preheating boiler feedwater. The economizers draw outside air, reducing their ability to achieve maximum heat transfer.

As a general comment, the state of boiler plant instrumentation and safety equipment is poor. Boiler water level alarms, both high level and low level, are inoperative, which is extremely dangerous. It is recommended that these conditions be remedied immediately.

A major upgrading of the boiler plant is required. While replacement of the boiler burners may increase combustion efficiency, the design of the boilers may require complete rebuilding of the front of the boilers to accomodate the new burners. This replacement may not increase combustion efficiency sufficiently to warrant the expense. It is recommended that a complete boiler plant replacement be undertaken.

2.2.2 Steam Distribution and Condensate Return System

The steam distribution and condensate return systems are generally in poor condition. The steam distribution system has numerous leaks and areas where insulation is missing or damaged. In addition, there are few steam traps, and in particular none on the main 8 bar and 16 bar distribution lines. Of the steam traps existing, none are maintained regularly. In the main steam lines are uninsulated near the point of consumption. In a number of areas insulation thickness is inadequate and valves, flanges and other fittings are uninsulated. At the time of the site visit, no condensate was being returned to the boilers. Condensate is collected in recesses in several areas in the plant and then sent to drain.

The major use of steam is in the vulcanizing department. Steam is used directly at 8 bar and 16 bar, and is also used to generate superheated hot water. A separate power unit within the main plant produces superheated hot

water in a bank of heat exchangers. The heat exchangers are poorly insulated. Instrumentation in the area is poor and generally not functioning. In addition, a number of problems exist in producing superheated hot water at the temperatures and in the quantities required by the vulcanizers. Variations in superheated hot water supply have adverse effects on product quality.

It should be noted that the steam traps serving the vulcanizers are malfunctioning. The steam traps incorporate an air relief valve, which, in many cases, passses live steam to the atmosphere.

Part of the condensate from the steam used to produce superheated hot water is used to produce flash steam for use in the calender dryer. It was noted that the steam pipework from the flash vessel to the calender dryer was flooded. In addition, many of the steam traps serving the dryer were inoperative or leaking steam.

Steam control valves are generally oversized, which contributes to the erosion of valve seats. This is particularly serious in the vulcanizing area.

2.2.3 Compounding Department

Energy use in the compounding department is primarily electricity for motive power and chilled water. The compounding department is responsible for the production of rubber by addition of carbon black, sulfur and other chemicals to the raw rubber. In the process, the raw rubber is masticated in compounding mills, to impart the desired properties and ensure mixing of rubber and additives.

There are two compounding mills in this department, one of 430 hp and one of 215 hp. A single festooner mill uses a 215 hp motor. All of these motors are of the synchronous type.

APPENDIX 4

BOILER DETAILS

LOCATION: Boiler House

Boiler	1	2	3
Manufacturer:	Not known	Not known	Not known
Age (years):	20	20	20
Type:	Water Tube	Water Tube	Water Tube
Rating (T/hr):	6.5	6.5	6.5
Medium raised:	Steam	Steam	Steam
Normal operating pressure (bar):	16	16	16

Burners			
Number:	2	2	2
Fuel fired:	Fuel oil	Fuel oil	Fuel oil
Manufacturer:	Not known	Not known	Not known
Age (years):	20	20	20
Type:	Pressure Jet	Pressure Jet	Pressure Jet
Draft:	Induced	Induced	Induced
Atomization:	Steam	Steam	Steam
Burner controls:	Manual	Manual	Manual
Draft control (dampers):	Manual	Manual	Manual

APPENDIX 5

BOILER COMBUSTION TESTS

Boiler No: 1 of 3

Date of Test: 3/12/84

Test Results

Fuel Fired: 1000 secs Fuel Oil

Item	Unit	Measurement
Firing Rate		Medium
CO_2 in Flue Gases	%	9.9
O_2 in Flue Gas	%	9.8
Flue Gas Temperature Before Econ	°C	291
Flue Gas Temperature After Econ	°C	181
Ambient Air Temperature	°C	39
Smoke Number		7.5
Feedwater into Econ	°C	75
Feedwater out of Econ	°C	87.5

Measurement	Instrument
% CO_2 in Flue Gases	Fyrite
% O_2 in Flue Gases	Fyrite
Flue Gas Temperature Before/After Eron	Electronic Thermometer
Ambient Air Temperature	Mercury in Glass Thermometer
Smoke Number	Truespot Smoke Pump
Feed Water Temp Before/After Econ	Electronic Thermometer

APPENDIX 5 (Cont'd)

BOILER COMBUSTION TESTS

Boiler No: 3 of 3

Date of Test: 3/9/84

Test Results

Fuel Fired: 1000 seconds fuel

Item	Unit	Measurement
Firing Rate		High
CO_2 in Flue Gases	%	10.5
O_2 in Flue Gases	%	4.8
Flue Gas Temperature Before Econ	°C	300
Flue Gas Temp After Econ	°C	185
Ambient Air Temperature	°C	38
Smoke Number		9

Measurements/Readings From:

Measurement	Instrument
% CO_2 in Flue Gases	Fyrite
% O_2 in Flue Gases	Fyrite
Ambient Air Temp	Mercury in Glass Thermometer
Smoke Number	Truespot Smoke Pump
Flue Gas Temperature Before/After Econ	Electronic Themometer
Feedwater Temperature Before/After Econ	Electronic Themometer

APPENDIX 6

BOILER EFFICIENCY TESTS

Date: March 17, 1984
Boilers 1 and 3 firing

Fuel Type: 1000 seconds Fuel Oil

Boiler Number	Burner Location	Pressure Bar	Equivalent Oil Flow liter per minute
1	Left	0.6	3.9
1	Right	0.3	2.75
3	Left	0.3	2.75
3	Right	0.5	3.55

Nozzle Sizes = 3 mm diameter

Steam Pressure

Boiler 1	=	14	bar
Boiler 3	=	14.7	bar
Average	=	14.35	bar

Feedwater Flowrate = 8440 kg per hour

Instrumentation - Pressure gauge
Ultrasonic flow meter

APPENDIX 10

BOILER WATER TESTS AND ESTIMATE OF BLOWDOWN

Assumptions

A constant T.D.S. is maintained in the boiler.

Data

Boiler Feedwater TDS	=	25	=	B
Make Up Water TDS	=	25		
Boiler Drumwater TDS	=	175	=	A
Percentage Make Up	=	100%	=	M

Calculation*

$$\text{Percent Blowdown} = \frac{(B \times M)}{(A - B)}$$

$$= \frac{25 \times 100}{175 - 25}$$

$$= 16.7\%$$

*Calculation technique similar to Exhibit 5.20, Energy Audit Manual

APPENDIX 11

BOILER SURFACE TEMPERATURE MEASUREMENTS

Boiler Number 1

Location	Measurement 1	2	3
Side Walls °C =	102	104	95
	107	110	92
	93	106	97
Rear °C =	103	102	110
	94	96	98
Front °C =	97	99	100

Boiler Number 3

Location	Measurement 1	2	3
Side Walls °C =	115	107	95
	92	99	102
	97	101	102
Rear °C =	104	100	93
	96	95	95
Front °C =	102	101	102

APPENDIX 12

ESTIMATE OF BOILER RADIATION LOSS

Radiation losses from the boiler can be estimated using the data from Appendix 14.

Boiler Surface Temperature	=	100°C
Surface Area of Sidewalls	=	16.5 m^2 x 2
Surface Area of Front and Back	=	13.1 m^2 x 2
Surface Area of Top	=	7.9 m^2 x 2
Heat Transfer Coefficients Front, Back and Sidewalls	=	12.79
Heat Transfer Coefficients, Top	=	14.8
Ambient Air Temperature °C	=	40
Conversion of kWh to Joules	=	0.0036
Operating Hours	=	6912
Heat Losses	=	h x a x dt
Total Loss Per Year	=	$\frac{(65,946)}{(1000)}$ x 6912 x 0.0036
for 1 boiler	=	1641 GJ
Boiler Input	=	229,296 GJ
% Radiation Loss for Plant	=	$\frac{1641}{229,296}$ x 100 x 2
	=	1.4%

APPENDIX 13

BOILER EFFICIENCY CALCULATION

The following efficiency calculation is based upon measured values of oil flow through nozzles and water flow into the boilers. Metering of individual boilers was not possible and so the efficiency developed is based on total flow rates.

Data

Boiler Number One Operating Pressure	=	14 bar
Boiler Number Two Operating pressure	=	14.7 bar
Metered Water Flow Rate	=	8440 kg/hour
Feed water Temperature	=	88°C
Boiler Number One Oil Pressure left burner	=	0.6
Boiler Number One Oil Pressure right burner	=	0.3
Boiler Number Three Oil Pressure left burner	=	0.3
Boiler Number Three Oil Pressure right burner	=	0.5
Nozzle Sizes	=	3 mm
Flow Rate at 0.6 bar thro 3mm Nozzle	=	3.90 liters per min.
Flow Rate at 0.3 bar thro 3mm Nozzle	=	2.75 liters per min.
Flow Rate at 0.3 bar thro 3mm Nozzle	=	2.75 liters per min.
Flow rate at 0.5 bar thro 3mm Nozzle	=	3.55 liters per min.
Total Flow		12.95 liters per min.

Calorific Value of 1000secs Oil	=	43075.2 kJ/kg
Specific Gravity	=	0.96
Enthalpy of Steam at 14.35 bar	=	2790.7 kJ/kg
Enthalpy of Water at 88°C	=	369 kJ/kg
Blowdown Rate (see Appendix 10)	=	0.167 kg/kg
Dryness fraction assumed	=	0.98

APPENDIX 13 (Cont'd)

Calculation

$$\text{Boiler Efficiency} = \frac{(\text{Heat Content of Steam + Water leaving}) - \text{Heat Content of Water Entering}}{(\text{Heat Content of Fuel In})}$$

Heat Content of Steam Out = (Dryness Fraction x Enthalpy of Steam at Boiler Pressure) (Mass of Steam)

Heat Content of Water Leaving Boiler = (1-dryness Fraction)x(Enthalpy of Water at Boiler Pressure)x(Mass of Steam)+(Enthalpy of Water at Boiler Pressure)x(Mass of water in blowdown)

Heat Content of Water Into Boiler = (Mass of Steam + Mass of Blowdown) (Enthalpy at Feedwater Temp)

Heat Content of Fuel In = (Calorific value) x (mass of fuel used)

Heat Content of Steam = (0.98) (2,790.7) (7,030.52) kJ/hr
= 19,227,671 kJ/hr

Heat Content of Water Out = (0.02)(835)(7030.52)+(835)(0.167) (8,440)
= (117,410) + (1,176,916)
= 1,294,326 kJ/hr

Heat Content of Water Into Boiler = (8,440) (369)
3,114,360 kJ/hr

Heat Content of Fuel In = (43,075.2) (12.95) (60) (0.96)
= 32,130,653 kJ

APPENDIX 13, Cont'd

Boiler Efficiency $= \frac{((19,227,671 + 1,294,326) - (3,114,360))\ 100}{(32,130,653)}$

$= 54.1\%$

APPENDIX 14

INSTALLING THERMAL INSULATION ON BOILER AND ANCILLARY PLANT

Assumptions

Reduction in heat losses by insulation: 90 percent

Data

Boiler operating hours: 6912/yr
Boiler ancillaries operating hours: 6912/yr
Boiler efficiency: 54.1 %

Plant/ equipment	Shape/ Position	h	Area (m2)	dT (°C)	Heat Loss (Watts)	Insulation Proposed	Estimated cost
Boiler:							
1, 2,	Side wall	12.79	16.5	60	12662	40 mm cal	
and 3	Side wall	12.79	16.5	60	12662	Silicate	3275 Rs/m^2
	Lower top	14.8	7.9	60	7015	and 15 mm	
	Lower top	14.8	7.9	60	7015	cement	
	Top	16.63	6.5	60	6486	finish	
	Front	12.79	13.1	60	10053		
	Back	12.79	13.1	60	10053		
			TOTAL		65946	TOTAL	266,913

APPENDIX 14 (Cont'd)

Energy Savings

Boiler = Heat loss/hr x 0.9 x plant operating time / 10^6
= (65946 x 3.6) (0.9) (6912) / 10^6
= 1477 GJ x 2 boilers
= 2954 GJ

Total energy savings = (1477) + (1477)
= 2954 GJ

Cost savings
= (2954) (115.19)
= Rs. 340,271/yr

Cost of Implementation

The total cost of insulating is estimated to be Rs. 266,913.

Simple Payback = $\frac{266,913}{340,271}$
= 0.8 years

Energy savings	= 2954 GJ/Year
Cost savings	= Rs. 340,271/Yr
Cost of Implementation	= Rs 266,913
Simple Payback	= 0.8 Years

APPENDIX 15

REDUCING BLOWDOWN

Blowdown is often used excessively to control the level of total dissolved solids (TDS) in a boiler. Dissolved solids can be deposited as scale on the heat transfer surfaces in a boiler. A compromise between energy waste owing to blowdown and owing to scaling is reached by maintaining blowdown levels up to 3,000 parts per million for most industrial boilers.

Calculation*

Assumptions

Maximum acceptable TDS level	=	3,500 ppm
Estimated mean TDS level	=	3,500 ppm

Data

Boiler efficiency	=	54.1	percent (See Appendix 13)
Percent makeup water	=	100	percent
Makeup TDS	=	25	ppm)
Blowdown TDS	=	175	ppm) from treatment company reports
Energy input to boilers	=	229296	GJ/year
Feedwater temperature	=	88	°C
Boiler pressure	=	16	bar
Heat content in city water	=	126	kJ/kg
Heat content of 98% Steam 16 bar	=	2738	kJ/kg
Heat content of Feedwater	=	369	kJ/kg

*Calculation technique similar to Exhibit 5.11, Energy Audit Manual

APPENDIX 15 (Cont'd)

Present blowdown rate $= \frac{(\text{Percent Makeup x Makeup TDS})}{(100 \text{ x Blowdown TDS})}$

$= \frac{(100 \text{ x } 25)}{100 \text{ x } 175}$

= 0.167 kg/kg of steam produced

Heat required to raise kg of steam = hg @ boiler pressure -hw of feedwater

= 2738 - 369

= 2369 kJ/kg

Steam produced/year $= \frac{(\text{Energy input to boilers x average boiler efficiency}}{\text{Heat Required to Raise kg of Steam}}$

$= \frac{(229296 \text{ x } 0.541)}{(2369)\ (10^6)}$

$= 52.4 \text{ kg x } 10^6 \text{ kg/year}$

Reducing Blowdown

Blowdown per year = blowdown rate x steam produced/year

$= (0.167)(52.4 \text{ x } 10^6)$

$= 8.74 \text{ kg x } 10^6 \text{ /year}$

Heat content in blowdown = Sensible heat in blowdown-sensible heat of city water

= 859 - 126

= 733 kJ/kg

Percent blowdown loss $= \frac{(\text{Blowdown/Yr x Net Heat Content of Blowdown x 100})}{\text{Energy Input to Boilers}}$

$= \frac{(8.74 \text{ x } 106 \text{ x } 733 \text{ x } 100)}{229{,}296 \text{ x } 10^6}$

= 2.8 percent

Blowdown rate @ 3,000 $= \frac{(\text{Percent of Makeup x Makeup TDS})}{100 \text{ x } (3{,}000 - \text{makeup TDS})}$

$= \frac{(100 \text{ x } 25)}{(100)\ (3{,}000 - 25)}$

= 0.008 kg/kg of steam produced

APPENDIX 15 (Cont'd)

Energy Savings

= (Existing - new blowdown rate) x (steam produced/year)x(heat content in blowdown)

= (0.167 - 0.008) + (52.4×10^6)(733)

= 6107 GJ/year

Cost Savings

= (GJ/year) (Rs./GJ)

= (6107) (115.19)

= Rs.703465/yr

Implementation Costs

To provide an instrument to monitor the TDS level of the boilers on a regular basis should cost approximately Rx 5000.

Energy savings	= 6107 GJ/year
Cost savings	= Rs703,465/year
Cost of Implementation	= Rs 5,000
Simple Payback	= 0.01 years

Sri Lanka's domestic energy resources consist mostly of hydropower and fuelwood. Other resources include agricultural and agroindustrial biomass residues, geothermal energy, and peat, but none is currently used on a significant scale. Prospects for discovering sources of hydrocarbons are believed to be limited. Two factors are likely to have a major effect on future energy supply and demand in the industrial sector: (1) the probable availability of imported steam coal, and (2) the development of wood plantations to offset the depletion of natural fuelwood sources.

In this appendix, we summarize the results of a literature survey and extensive discussions with Sri Lankan officials with respect to the future availability and prices of petroleum products, coal, peat, fuelwood other renewable resources, and electricity.

1. **Petroleum products.** Ceylon Petroleum Corporation (CPC) imports and refines approximately 50,000 bpd of 32-33 degree API crudes from the Middle East (mostly Saudi Arabia, Iran and Iraq, through a contract with Caltec) to produce about 2 million tons of refined products, of which 42 percent is furnace oil.

   The basic problem facing CPC is the rapidly growing demand for light fractions (LPG, gasoline, kerosene, aviation fuel, and diesels) and the decreasing demand for furnace oil resulting from industrial fuel oil conservation and switching (e.g., as in the cement industry). In addition, the bleak prospects for the SFMC fertilizer complex, which is the largest national user of furnace oil and naphtha, are likely to exacerbate this imbalance. As a result, CPC is left with two options:

   - Export more heavy fractions and naphtha
   - Install a hydrocracker.

   The first option is the least cost option for the short term, provided that the products will find a market at a reasonable price. If SFMC is going to cease operation, up to 400,000 tonnes of fuel oil and naphtha will have to be exported, a 100 percent increase from 1983 levels. These exports would bring in up to Rs.2,000 million in foreign exchange revenues, which could be used to purchase the light refined products needed to meet additional demand.

   The cost of the second option was estimated at U.S. $150 million (1981), and is probably close to $200 million now (Rs.5,000 million). As of spring 1984, this option's prospects were unclear.

The price of heavy furnace oil to industry is not expected to increase from its current price of Rs.4,900/tonne at least until the end of 1985. The latest world oil market studies project an oil glut until 1986. Consequently, furnace oil prices will increase after early 1986 at an average annual rate of 2 percent in real terms.*

2. **Coal.** Although Sri Lanka was a relatively large user of coal even 30 years ago, current coal consumption (28,000 tonnes in 1982) represents less than 1 percent of total net energy supply and about 1 percent of net commercial energy supply.

Future plans, however, call for a reversal of this trend, with consumption reaching 40,000 tonnes in 1984 and jumping to 400,000 tonnes in 1990 when the coal-fired power plant at Trincomalee is commissioned. By 2000, preliminary estimates indicate that coal imports could be anywhere between 2 and 4 million tonnes annually. Although the imports will be mainly steam coal for electric power plants, up to 10-15 percent could be used by industry in:

1. existing boilers originally designed for coal
2. new coal-designed or multifuel boilers
3. some direct burning applications (e.g., bricks, foundries).

Based on recent discussions with possible suppliers, the coal available in Sri Lanka is expected to have the following characteristics:

- Calorific value, as such: 6,400 - 6,600 kcal/kg
- Moisture content: 6-10 percent
- Volatile matter: 27-30 percent
- Ash: 10-20 percent
- Sulfur (for power plants): less than 1 percent
- Sulfur (for cement): less than 2 percent
- Sulfur (other): less than 3 percent.

Current delivered prices are around U.S. $55-60/tonne or Rs.1,375-1,500/tonne at KCW (Kankesanturai Cement Works). Because of the larger quantity needed for the power plant, Trincomakee CIF real prices by 1990 should be U.S. $45-$50 (1984 constant dollars).

Based on discussions with several Sri Lankan officials and embassy officials in Sri Lanka (Australia, Indonesia, India) and on the latest international coal studies, it appears that the price of steam coal (bituminous and subbituminous) is not likely to increase

*Based on studies performed by the Energy Coordinating Team in 1983 and 1984.

significantly in the future. A real rate of increase of 1 percent per annum has been selected to reflect the price competition with furnace oil (which will increase at 2 percent per annum) and take into account the magnitude of world coal reserves relative to oil reserves.

3. **Electricity.** Electricity demand is projected to increase from 2,076 kWh (50 percent hydro) in 1982 to 4,373 kWh in 1990 (9.7 percent per annum) and to almost 10,000 kWh in the year 2000. Total installed capacity is projected to increase from 592 MW (of which 40 percent will be hydro) to about 800-850 MW in early 1985 (of which 612 MW will be hydro), 1,200-1,300 MW in 1990 (947 MW hydro), and between 2,500 and 3,000 MW in 200 (50-60 percent hydro).

   High voltage industrial electricity consumption is not expected to increase significantly in the 1980s, as no new major industrial projects will be coming on line and some large users may be phased out (e.g., SFMC, Steel Corporation).

   In the 1990s, it is likely that this demand segment will grow slowly, being served by hydro and coal-based loads. In contrast, low and medium voltage industrial electricity is likely to increase dramatically over the 1995-2000 period, as small and medium-sized businesses develop. Growth is estimated at more than 20 percent per annum.

   As demand in other sectors (households, commerce, and railroads) is also expected to increase sharply over the same period, there may be years when peak conservation turbines will be needed to meet demand. In particular, there may be constraints on supply between 1988 to 1990, until the 120-MW Trincomalee coal-fired power plant comes on line.

   Compared with the current average total cost of Rs 1.8-1.9/kWh (including demand and fuel adjustment charges) in industry, future electricity rates are likely to be higher in real terms, given the long-term marginal development costs of between Rs.3-4/kWh (in 1984 rupees) and growth in repayment of the capital intensive capacity expansion program. For the purposes of this study, it was assumed that average industrial electricity prices will increase at 2 percent per annum in real terms, reflecting both the increasing cost of oil used at the margin and the repayment of the foreign exchange part of the generation expansion program.

4. **Fuelwood.** Fuelwood is currently the most widely used source of energy in Sri Lanka. In 1982, total fuelwood consumption was estimated at approximately 5 million tonnes or 55 percent (in fuel oil equivalent) of total gross energy supply. Demand in 1990 is projected to be about the same. However, supply characteristics

will be drastically different. In 1980, 56 percent of all fuelwood supply originated from denudation of forests, 29 percent from rubber and other crop residues, and the balance (15 percent) from the natural regeneration of forests. While 400,000-750,000 acres will be cleared under the Accelerated Mahaweli Development Program, somewhat alleviating the problem, denudation of forests cannot continue at the past pace. Current government programs undertaken with assistance from USAID and the Asian Development Bank call for extensive reforestation through fuelwood plantations. USAID and ADB will finance approximately 100,000 acres of fuelwood plantation, for a potential of 1.5 million tonnes annually, starting in the 1990s.

The prime objective of this reforestation effort is to provide a future fuel supply to households. To ensure long-term availability to both households and industry, a much more aggressive program would be required.*

In any case, long-term availability of fuelwood for industry can only be ensured by captive plantations.

Current market prices for fuelwood originating mostly from Mahaweli clearings are between Rs.20 and 70/cubic meter onsite (Rs.60-210/tonne); delivered prices vary between Rs.500 and Rs.650/tonne.

Based on preliminary estimates, this range of prices is likely to hold for dedicated fuelwood plantations, on an annualized basis. Consequently, for the purposes of this study, fuelwood was assumed to be available at Rs.600/tonne (U.S. $24) at the plant site. This price corresponds roughly to Rs.2,000/tonne of oil equivalent.

*A 1979 U.S. AID study estimated that about 650,000 acres of fuelwood plantations would be needed, plus 10,000 acres annually thereafter to allow for the effects of population growth.

Appendix D TENDER DOCUMENTS*

D.1

*Adapted from documents used by the Ceylon Electricity Board, Sri Lanka.

SRI LANKA TYRE CORPORATION
COLOMBO, SRI LANKA

TENDER FOR THE SUPPLY OF
A COMPLETE MULTIFUEL STEAM PLANT
(10 TONNES OF STEAM/HOUR)

TENDER NO. _____

CLOSING AND OPENING OF TENDERS: _____
AT THE OFFICE OF THE CHAIRMAN,
SRI LANKA TYRE CORPORATION,
COLOMBO, SRI LANKA

CONTENTS

	Page
Introduction and Closing Date of Tender	1
General Conditions of Tender	1
Appendix 1: Form of Tender	10
Appendix 2: Form of Bank Guarantee	11
Appendix 3: Specifications	12

121

SRI LANKA TYRE CORPORATION
GENERAL CONDITIONS OF TENDER

Scope of Work

Supply and delivery of material to the Sri Lanka Tyre Corporation, Kelaniya, Sri Lanka.

The Sri Lanka Tyre Corporation will open letters of credit for payment of 90 percent CIF value on shipment and balance 10 percent on delivery of materials to the factory at Kelaniya. Customs duty and business turnover tax at the port of Colombo will be paid by the Sri Lanka Tyre Corporation and should not be included in the contract sum.

1. Receipt of Tenders

Tenders shall be submitted as per annexed schedule of prices in duplicate. The original and duplicate copy of the tender should be placed in separate envelopes marked "Original" and "Duplicate." Both envelopes should be enclosed in one securely sealed cover that should be marked as described on Page 1 of the document on the top left-hand corner and shall be receivable by the Chairman, Tender Board, Sri Lanka Tyre Corporation, Kelaniya, Sri Lanka.

2. Closing of Tenders

Tenders sealed, enclosed, marked, and addressed as aforesaid should be sent under registered cover to reach the Chairman, Tender Board, not later than _____ as indicated on Page 1 of this document. If local representatives are submitting tenders on behalf of manufacturers and/or principals abroad, they or their agents can deposit such tenders in the Tender Box provided for this purpose at the Sri Lanka Tyre Corporation, Colombo (see Page 1).

Tenders sealed, marked, and addressed as aforesaid may also be handed over to the Chairman, Tender Board, or to the officer deputed by him to receive such tenders at the Sri Lanka Tyre Corporation before the closing time for tenders. In such an event, the sealed cover should bear the name and address of the party who has submitted the tender.

3. Opening of Tenders

Tenders will be opened immediately after the closing of tenders at the _____.

Tenderers or their duly authorized representatives may be present at the opening of tenders. The officer who opens the tenders will read out or cause to be read out to those present the quoted price as indicated in the offer.

Technical data, specifications, or similar particulars will not be divulged. Any tender received after the closing time will be rejected. Any tenderer, if he so

wishes, may scrutinize the duplicate or any tender that has been submitted, only with regard to the prices quoted, by prior appointment with the Chairman, Tender Board.

4. Local Agent to Hold Power of Attorney

a. Local agents representing principals abroad will not be considered unless they hold the power of attorney from the principals empowering the agent to offer on their behalf, to enter into a valid agreement on behalf of the principals to fulfill all the terms and conditions of the contract, in the event of the tender being awarded.

b. Nomination of agent(s) after the tender has been submitted shall not be valid.

5. Bid Security

Each tender shall be accompanied by a bid security in the form of a bank draft/ certified check or a bank guarantee confirmed by a bank operating in Sri Lanka and payable to the Sri Lanka Tyre Corporation equivalent in value to Sri Lanka Rs._____ or five percent (5%) of the total tendered price, whichever is lower. **Failure to submit bid security at the time of opening of the tender will result in the tender being rejected.** Checks submitted as bid security will be credited to the Sri Lanka Tyre Corporation, subject to a refund in terms of Paragraph 2 of Clause 5.

The bid security shall be valid for one hundred twenty (120) days from the date of opening of tenders. Bid securities from unsuccessful tenderers will be returned to them, while the bid securities of the successful tenderers will be returned to them after receipt of the performance bond referred to in Clause 10.

6. Schedule of Prices

a. Tenders shall be in the prescribed form of schedule of prices. Prices shall be quoted F.O.B./unit conference line ocean freight prevailing at the time of tender supported by this document (Clause 13.6) shall be indicated separately. Item here refers to items given in the column under description. All agents, commissions, discounts, etc., should be disclosed in the appropriate column in the schedule of prices. **Offers not in the prescribed form are liable for rejection.**

b. Prices quoted in the currency of the country of origin should be entered in the schedule of prices.

c. Tenderers shall provide, in the prescribed form of schedule, the name and address of local agents in Sri Lanka, if any.

d. Any guarantees offered by manufacturers of the goods should also be indicated while making the offer.

127

7. Clearing of Materials and Transport to SLTC Stores

The successful tenderer shall be responsible for the **expeditious** clearing of materials from the harbor and handing over same to the Sri Lanka Tyre Corporation, Kelaniya. If the tenderer is not agreeable for clearing of materials from the harbor and delivery to stores, **the offer will be rejected.** In the event of the goods being diverted to other destinations from _____, payment for such transport will be made at accepted mileage rates. Proof that the local agent or representative can undertake the above work should be given explicitly with the tender documents.

The successful tenderer should send through courier service a duplicate set of shipping documents to his local agent or representative to allow him to obtain a bank guarantee and to clear the goods without rent or container charges for delays. The Chief Engineer, Contracts and Supplies, will arrange to sign all such guarantees on presentation of the necessary documents. The tenderer should not await the receipt of original documents through the bank to arrange clearing of materials, as all assistance will be provided for clearing materials on a guarantee in the event of delays in the receipt of original documents. The successful tenderer must clear the materials **within three (3) working days** from the date of discharge of cargo at the port.

7.1 Insurance

The tenderer/local agent should insure all materials for the full CIF value against all insurable risks or damage from whatsoever cause with the Insurance Corporation of Sri Lanka or the National Insurance Corporation of Sri Lanka from the port of shipment up to the Sri Lanka Tyre Corporation, Kelaniya. Insurance policies should be obtained in the name of the Managing Director, Sri Lanka Tyre Corporation, and the cost of insurance follow-up should be included in the appropriate column on the schedule of prices.

If the above information is not supplied with the tender, the tender is liable for rejection.

8. Minimum Validity Period of Offer

a. All offers shall be good for acceptance for a minimum period of ninety (90) days from the closing date for tenders.

b. All F.O.B. prices included in the schedule of prices, Clause 6 above, shall be firm and shall not be subject to any price variation within the validity period of offer specified in (a) above.

c. Any variation in freight resulting from a change in conference line rates will be settled.

Tenders that do not comply with requirements (a) and (b) above will be rejected.

9. Evaluation of Tenders

a. The prices quoted in currencies of the country of origin of the goods shall be converted to local currency at the official middle exchange rate of the Central Bank of Sri Lanka prevailing on the day of opening of tenders.

b. The tenders shall be evaluated at cost per item, including commissions and cost of clearing from port and delivery to stores.

c. An amount of one percent (1%) per week over the quoted F.O.B. price in the schedule of prices shall be added for the evaluation purposes when the indicated delivery period is exceeding required delivery indicated in Clause 11.

10. Performance Bond

The supplier/principal/agent shall deposit within fourteen (14) working days of receipt of the letter of award a performance bond supported by a guarantee from a reputed bank in the country of the supplier/principal/agent and confirmed by a bank operating in Sri Lanka corresponding to five percent (5%) of the amount of contract. However, the type of such bond of guarantee (whether certified check, bank bond, bank guarantee, surety bond, irrevocable letter of credit, or otherwise) shall be at the option of the supplier/principal/agent. The letter of credit will be opened after the deposit of the performance bond. The performance bond shall be in favor of the General Manager, Sri Lanka Tyre Corporation, Colombo, and shall be valid for a period not less than ninety (90) days from the actual date of the anticipated final shipment. The supplier/principal must on his own account instruct his bank to cable the General Manager, Sri Lanka Tyre Corporation, the date, amount, and validity period of the performance bond deposited to expedite opening of letters of credit.

In the event of default on the part of the supplier/principal resulting from breach of agreement or relevant conditions hereto, the General Manager may by written notice terminate the right of supplier/principal to proceed with any or all remaining deliveries and collect the performance bond without resource.

11. Delivery of Goods

The total quantity shall be ready for shipment within twelve (12) weeks of opening of letters of credit. Tenderers who cannot comply with this delivery schedule shall state specifically when delivery could be made.

12. Mode of Payment

a. **Foreign cost.** Payment will be made by means of a letter of credit opened in favor of the successful tenderer. Such letter of credit will provide for payment to be made as indicated below against shipping documents that will include clean on-board freight prepaid bills of lading, signed invoices, certificate of origin, certificate of inspection, warranty, and a certificate of quality and quantity from an inspector as per Clause 16.

b. A letter of credit will be opened for the foreign cost to be paid in two installments, as follows:

First installment of ninety percent (90%) of the F.O.B. or CIF cost, as the case may be, of each shipment, to be paid on presentation of shipping documents, etc., as stated in (i) above.

The balance ten percent (10%) of F.O.B. or CIF cost to be paid on issue of a certificate by the General Manager, Sri Lanka Tyre Corporation, to the relevant bank, after the goods have been satisfactorily delivered to the Sri Lanka Tyre Corporation's stores.

13. Details to Accompany Tender

All tenders should contain adequate particulars with respect to the items offered.

a. Country of origin and name of manufacturer.

b. Test certificates (in English), including type tests.

c. Manufacturers' leaflets, illustrations, and full particulars of the items offered (in English).

d. Schedule of prices called for in tender document Clause 6 duly completed.

e. Variations and/or deviations in specifications, if any.

f. Six (6) copies of signed "pro forma" invoices indicating the F.O.B. prices and freight charges separately. Documents confirming ocean freight indicated and obtainable from steamer agents/shipping lines should be annexed.

g. Documents for proof of ability referred to in Clause 21.

h. Relevant guarantees of the manufacturers should be submitted.

14. Power to Accept or Reject Offers

a. The contract shall be awarded to the tenderers whose offer complies to the Board's specifications, satisfies the requirements of the Board, and is most

advantageous to the Sri Lanka Tyre Corporation with price and other factors being considered. In making its selection, the duly appointed tender board will not be bound to make the award to the tenderer submitting the tender with the lowest indicated cost.

b. The tender board reserves the right to reject any or all tenders without adducing any reasons. The Board may accept any or all items of the offers and reserves the right to increase or decrease the quantity of goods to be contracted for at prices indicated in the schedule of prices and subject to the conditions in Clause 6(b) and (c).

c. The notice of acceptance of tender will be sent by registered post to the successful tenderer at the address given by him in the tender document as soon as possible after the decision of the tender board. Intimation of the acceptance of tender may be made by telex/cable if circumstances so require, and such intimation should be considered as sufficient notice of acceptance until receipt of notice of acceptance as above.

15. Packing

In addition to specific packing required as per specification, if any, the tendered price shall include the cost of all necessary packing, including cases, materials, and labor. Export packing must be done in the best possible manner to withstand rough handling in transit. Packages must be suitable for export to and storage in the tropics. The tenderer will be held responsible for the items so packed so as to ensure against damages in transit to Colombo. Small packages subject to pilferage and being misplaced should be sent in containers.

16. Inspection of Materials

a. The materials shall be inspected prior to shipment by an independent competent authority of recognized status and competence acceptable to the Sri Lanka Tyre Corporation for the purpose of obtaining the certificate of quality and quantity. Any expense incurred shall be borne by the contractor. The Sri Lanka Tyre Corporation also reserves the right to reject any testing authority and appoint its own inspector for this purpose. An inspector/panel of inspectors/inspecting authority is herein referred to as the inspector.

b. Inspection fees of any additional inspectors appointed by the Sri Lanka Tyre Corporation will be met by the Sri Lanka Tyre Corporation.

17. Shipping Advice

When goods are ready for shipment, the tenderer shall send to the General Manager a cable/telex stating the name of the ship and the number of packages being dispatched and shall send by air mail or preferably courier service within two (2)

121

days after bill of lading the advance copies of following shipping documents when goods are shipped:

a. Two copies of invoice

b. Two copies of freight prepaid bill of lading

c. One certificate of origin

d. Two copies of packing particulars, including the list of items, weight, and measurement of each package

e. Certificate of quantity and quality.

Tenderers are requested to furnish the following details along with their tender:

a. Number of packages
b. Dimensions of packages
c. Description of the packing
d. Probable date of shipment
e. The port/ports from which the goods will be shipped.

18. Delivery Within Agreed Period and Damages for Delay

a. Should the tenderer anticipate at any time during the execution of the order that he will be unable to deliver the items within the time specified in his tender, he shall at once give notice accordingly in writing to the General Manager, Sri Lanka Tyre Corporation, explaining the cause for the delay. In the case of delay, the General Manager shall have the option of either granting an extension or terminating the award, ruling the case as default of contract. If the extension is granted, the tenderer shall effect shipment within the extended period, but will, in addition to any other liabilities incurred by him under this contract, be subject to a deduction from the tendered sum and/or the amount covered by the performance bond for liquidated damages hereto (and not as a penalty) of one-tenth of one percent (0.1%) of the value of each item not shipped for each and every complete day that may lapse between the contracted date of shipment and actual date of shipment.

b. In the case of acceptance of extension of delivery, the principal/supplier shall extend the period of validity of the performance bond referred to under Clause 10.

19. Contract Not To Be Sublet

No tenderer shall assign or sublet his obligations to supply the items tendered for and accepted without the written authority of the General Manager. If any part of his obligation has been assigned or sublet by the tenderer with written authority,

he shall nevertheless be held responsible for the due performance of the part assigned or sublet.

20. Force Majeure

The tenderer shall not be responsible for delay or non-performance of his contractual obligations to sell, and the Sri Lanka Tyre Corporation shall not be held responsible for delay or non-performance of its contractual obligations to purchase all or any part of the supplies, caused by war, blockade, embargo, insurrection, mobilization, act of God, governmental direction or intervention of civil, naval, or military authorities or other agencies of government, riots, civil commotions, warlike conditions, labor troubles (including strikes), sabotage, prolonged failure or other epidemics, quarantine, fire, flood, windflood, typhoon, hurricanes, tidal waves, landslides, lightning, and explosion.

21. Proof of Ability

Tenderers shall submit documents and/or other evidence of their ability to carry out the contract while forwarding their offer. Factors such as experience, plant facilities, nature of business, capital invested or authorized, turnover, availability of raw materials, guaranteed time of delivery, and other relevant matters will be considered when evaluating offers.

22. Patent Rights Claims

The tenderers shall indemnify the Sri Lanka Tyre Corporation against any and all claims arising on account of patent rights or royalties, whether from manufacturers or others, from the use by the Sri Lanka Tyre Corporation of patented or royalty goods supplied.

23. Arbitration

If, during the continuance of this contract or at any time after the termination thereof, any differences or disputes shall arise between the parties hereto in regard to the interpretation of any of the provisions herein contained or any other matter or thing relating to this contract (other than difference or dispute in respect of which a decision of the Chairman, Sri Lanka Tyre Corporation, is declared to be final and binding on the parties hereto), such difference or dispute shall be forthwith referred to two arbitrators for arbitration in Sri Lanka, one to be appointed by each party, with liberty to the arbitrators in case of difference or their failing to reach an agreement to appoint an umpire. In the event of the two parties failing to agree on the appointment of an umpire, he will be nominated by the International Chamber of Commerce, and the award made by the two arbitrators or the umpire, as the case may be, shall be final and conclusive and binding on the parties hereto.

If either party in difference fails or neglects to appoint an arbitrator within the space of thirty (30) days after notice in writing to do so has been given by the other party, or shall appoint an arbitrator who shall refuse to act, the arbitrator appointed by the other party shall make a general decision alone, and the making of any award in such reference shall be a condition to any right of action against any of the parties hereto in respect of such difference.

The decision of a majority of the arbitrators shall be final and binding upon the parties to the contract, and the expenditure of the arbitration shall be paid as the arbitrators may determine.

24. The tenders and any contract resulting therefrom shall be governed and abide by Sri Lanka law.

25. Tenderers must be acquainted fully with the conditions of the tender. No plea of lack of information or insufficient information will be entertained at any time.

26. Offers will be liable for rejection of tenderers have not purchased official tender documents and if all the conditions laid down hereto have not been strictly fulfilled.

27. Any further information can be had on application to the Chief Engineer, Contracts and Supplies, Sri Lanka Tyre Corporation, _____ _____ _____.

I agree to abide by the above conditions of tender and therefore submit my offer in the attached schedule.

_____

Signature of Tenderer and Seal

Date:_____

APPENDIX 1
SRI LANKA TYRE CORPORATION — FORM OF TENDER

The Chairman
Tender Board
Sri Lanka Tyre Corporation

_____

_____

(I/We), having examined the Conditions of Tender, the Bill of Quantities, and all other documents pertaining to this work/supply, do hereby offer and undertake to carry out the work/supply to the satisfaction of the General Manager, Sri Lanka Tyre Corporation, strictly in accordance with Conditions of Tender, at the prices and within the delivery period set forth in the accompanying Bill of Quantities pertaining to Tender No. _____. And, in consideration of the trouble and expense incurred by Sri Lanka Tyre Corporation in preparing the contract documents and in examining and considering the tender, (I/we) further undertake that this tender shall not be withdrawn by (me/us) before the expiration of three (3) calendar months from the date of closing, but shall remain binding on (me/us) and may be accepted at any time before such expiration.

And, (I/we) further undertake, in the event of this tender being accepted, to deposit in cash five percent (5%) of the tendered amount as security with the General Manager, Sri Lanka Tyre Corporation, or to furnish a bank guarantee as per tender conditions in the said sum, confirmed by a bank operating in Sri Lanka, in favor of the General Manager, Sri Lanka Tyre Corporation, for the due performance of the contract and for the payment of all claims to which the Sri Lanka Tyre Corporation may be entitled, and to execute an agreement in the prescribed form duly stamped by (me/us) at (my/our) expense in accordance with the Stamp Duty Ordinance, and to complete the work to the entire satisfaction of the General Manager, Sri Lanka Tyre Corporation.

And, (I/we) further agree, in the event of (my/our) failing mto make such deposit or execute such bond and/or execute such agreement within two (2) weeks of (my/our) being called upon to make such deposit or execute such bond and/or to execute such agreement, that the Sri Lanka Tyre Corporation has the right to recover from (me/us) the full amount of damages sustained by the Sri Lanka Tyre Corporation as a result of (my/our) so declining or failing, and confiscate the security deposit.

(I/We) understand that the Sri Lanka Tyre Corporation is not bound to accept the lowest or any tender it receives.

_____

Signature of Tenderer

Date: _____

Tenderer's Name: _____

Address: _____

Witness: _____

Signature: 1. _____ 2. _____

Name: _____ _____

Address: _____ _____

APPENDIX 2
FORM OF BANK GUARANTEE

_____, 198_

Sri Lanka Tyre Corporation

Dear Sirs:

At the request of our constituent, _____, of _____

_____ (hereinafter referred to as "the Contractor"), we, the undersigned, _____ _____, a banking corporation duly incorporated in _____ _____ and having its head office at _____ and carrying on business at _____ in the Island of the Republic of Sri Lanka, do hereby undertake and promise to pay to you on demand at Colombo in Sri Lanka currency such sums not exceeding in the aggregate Rupees _____ (Rs._____) as may be demanded by you from time to time hereunder, provided every such demand is made in writing under the hand of the General Manager or the Chief Executive Officer or your Board or any person purporting to act under the authority of the General Manager or the Chief Executive Officer.

Notwithstanding anything to the contrary herein contained, these presents shall be valid only up to and including the _____ day of _____, 198___, and shall not thereafter be of any force or avail in law except in respect of any demand made by you before 2 p.m. on the _____ day of _____, 198___, provided, however, that in case we shall have before 2 p.m. on the said _____ day of _____, 198___, extended the period of validity up to any date subsequent to the said _____ day of _____, 198___, the provisions of this clause shall stand amended and read as if the date of which these presents is so extended and originally been inserted wherever in this clause the said _____ day of _____, 198___ occurs, and these presents shall have force accordingly. Such period of validity may similarly be extended from time to time so as to keep these presents in full force up to such extended date or dates.

A demand addressed to us under the hand of your General Manager or the Chief Executive Officer or other officer of your Board acting as aforesaid shall be sufficient and conclusive proof that we are liable to pay to you the sum demanded hereunder.

APPENDIX 3
SPECIFICATION FOR THE SUPPLY OF A COMPLETE MULTIFUEL STEAM PLANT FOR THE SRI LANKA TYRE CORPORATION

Introduction

A 10 tonnes of steam per hour (22,000 lb/hour) multifuel boiler able to burn primarily wood or coal as well as up to 10 percent waste tires (by heating value), complete, fitted with additional oil burner(s), with fuel handling, flue gas cleaning, water treatment, stack, and instrumentation is required for use at the Sri Lanka Tyre Corporation.

Boiler

The boiler, which can be of conventional (e.g., stoker) type or a fluidized-bed system, must be able to deliver up to 10 metric tonnes of steam per hour at 16 bar. Boiler efficiency should be not less than 80 percent when fired 100 percent by oil, 75 percent when fired with steam coal (up to 15 percent ash, 11,000 Btu/lb dry basis, 30 percent volatiles), and 72 percent when fired by wood at 45 percent moisture content.

The boiler may be fitted with air preheater and economizer to ensure such performance at loads as low as 50 percent, and continuous blowdown.

Flue gas cleaning system must comprise cyclone, electrostatic precipitator or baghouses, and ID fan. Stack materials will be available locally.

Fuel Handling and Storage

The fuel storage system must comprise 10 days' capacity fuel tank for 1,000-1,500 sec furnace oil; 1,000 tonnes of wood covered storage space, and 500 tonnes of coal uncovered space.

The oil handling system must be complete with pump and steam preheat, if required.

The wood handling system must comprise a rotary chipper, if required by boiler design, and a pneumatic conveyor system for particulate fuels such as sawdust, chopped wood, and dried coir dust. Manual feed of solid and bulky fuels instead of mechanical feeding arrangements would be acceptable in Dutch oven type multifuel boilers with underflow furnaces.

List of Boiler Manufacturers -- U.S.

Energy Products of Idaho
4006 Industrial Avenue
Coeur d'Alene, ID 83814

Abco Industries
2675 East Highway 80
P.O. Box 268
Abilene, TX 79604

Aqua-Chem Inc.
Energy Systems Division
P.O. Box 421
Milwaukee, WI 53201

Babcock & Wilcox Company
4282 Strausser Street, NW
North Canton, OH 44720

Bethlehem Corporation
25th & Lenox Streets
Easton, PA 18042

Black, Sivalls & Bryson, Inc.
Coal Gasification Systems
P.O. Box 27125
Houston, TX 77227

Bryan Steam Boiler Company
P.O. Box 27
Peru, IN 46790

C-E Natco
Combustion Engineering, Inc.
P.O. Box 1710
Tulsa, OK 74101

C-E Power Systems
1000 Prospect Hill Road
Windsor, CT 06095

Clayton Manufacturing Company
498 North Temple City Boulevard
El Monte, CA 91731

Cleaver Brooks
5100 North 33rd Street
P.O. Box 421
Milwaukee, WI 53201

Combustion Service & Equipment Company
CNB Tri-Fuel Boiler Division
2016 Babcock Boulevard
Pittsburgh, PA 15209

Curtiss-Wright Power Systems
One Passaic Street
Wood-Ridge, NJ 07075

Dedert Corporation
20000 Governors Drive
Olympia Fields, IL 60461

Deltak Corporation
P.O. Box 9496
Minneapolis, MN 55440

Energy Resources Company
Suite 200
1990 North California Boulevard
Walnut Creek, CA 94596

Energy Systems Inc. (ESI)
P.O. Box 609
4926 Adams Road
Hixson, TN 37343

Federal Boiler Company
277 Fairfield Road
Fairfield, NJ 07006

Fluidyne Engineering Corporation
5900 Olson Memorial Highway
Minneapolis, MN 55422

Foster Wheeler Boiler Corporation
110 South Orange Avenue
Livingston, NJ 07039

Fulton Boiler Works
P.O. Box 122
Pulaski, NY 13142

Henry Vogt Machine Company
P.O. Box 1918
Louisville, KY 40201

List of Boiler Manufacturers -- U.S. (continued)

Herman Bogot & Company
3143 North Nottingham Avenue
Chicago, IL 60634

Industrial Boiler Company
221 Law Street
Thomasville, GA 31799

International Boiler Works Company
P.O. Box 498
East Stroudsburg, PA 18301

Johnston Boiler Company
1944 Thomas Street
Ferrysburg, MI 49409

Keeler/Dorr-Oliver Boiler Company
P.O. Box 548
Williamsport, PA 17703

Kewanee Boiler Corporation
101 Franklin Street
Kewanee, IL 61443

Lurgi Corporation
One Davis Drive
Belmont, CA 94002

Nebraska Boiler Company
70th & Cornhusker Way
Lincoln, NE 68501

North American Manufacturing
4457 East 71st Street
Cleveland, OH 44105

Peabody Gordon-Piatt Inc.
P.O. Box 650
Winfield, KS 67156

Power Flame Inc.
2001 South 21st Street
Parsons, KS 67357

Pyropower Corporation
P.O. Box 85608
San Diego, CA 92138

Ray Burner Company
1301 San Jose Avenue
San Francisco, CA 94112

Riley Stoker Corporation
P.O. Box 547
Worcester, MA 01613

Struthers Wells Corporation
P.O. Box B
Warren, PA 16365

Superior Boiler Works
3524 East Fourth Street
Hutchinson, KS 67501

Triad Sales Corporation
5421 North Diversey Boulevard
Milwaukee, WI 53217

Wormser Engineering, Inc.
225 Merrimac Street
P.O. Box 4007
Woburn, MA 01888

York-Shipley, Inc.
P.O. Box 349
York, PA 17405

Zurn Industries
Zurn Energy Division
1422 East Avenue
Erie, PA 16503

List of Boiler Manufacturers -- Other than U.S.

Alsthom-Atlantique
38, avenue Kleber
F-76795 Paris Cedex 16
FRANCE

Blohm & Voss AG, Mechanical Engineering
Postfach 100720
D-2000 Hamburg
FEDERAL REPUBLIC OF GERMANY

Breda Termomeccanica
Viale Sarca 336
I-20126 Milano
ITALY

Burmeister & Wain Energi A/S
Steam Power Engineering
Teknikerbyen 23
DK-2830 Virum
DENMARK

Chesterfield Ltd., Ti
Derby Road, Chesterfield
Derbyshire S40 2EA
UNITED KINGDOM

Clark & NEM, Ltd.
George, Box 8
Wallsend, Tyne & Wear NE28 6QH
UNITED KINGDOM

Clark Hawthorn Ltd.
Box 8
Wallsend, Tyne & Wear NE28 6QH
UNITED KINGDOM

Cockerill, S.A.
Esperance-Longdoz SA
avenue Greiner
B-4100 Seraing
BELGIUM

Deutsche Babcock AG
Postfach 100347
D-4200 Oberhausen
FEDERAL REPUBLIC OF GERMANY

EVT-Energie U. Verfahrenstechnik GmbH
Johannesstrasse 39-45
D-7000 Stuttgart 1
FEDERAL REPUBLIC OF GERMANY

Foster Wheeler Power Products Ltd.
Box 160, Hampstead Road
London NW1 7QN
UNITED KINGDOM

Franco Tosi SpA
Piazza Monumento, 12
I-20025 Legnano
ITALY

GHH-Gutehoffnungshutte Sterkrade AG
Postfach H110240
D-4200 Oberhausen 11
FEDERAL REPUBLIC OF GERMANY

Goteverken Angeteknik AB
Box 8734
S-40275 Goteborg 8
SWEDEN

Green & Son Ltd., E
P.O. Box, Calder Vale Road
Wakefield
West Yorkshire WF1 5PF
UNITED KINGDOM

Kvaerner Brug A/S
Kvaernerveien 10
Box 3610 Gb
Oslo 1
NORWAY

Maxitherm Boilers Pty. Ltd.
78 O'Riordan Street
Alexandria, NSW 2017
AUSTRALIA

Mitsubishi Heavy Industries, Ltd.
5-1 Marunouchi
2-Chome
Chiyoda-ku, Tokyo 100
JAPAN

List of Boiler Manufacturers -- Other than U.S. (continued)

NEI Thompson Cochran Ltd.
300 Myreside Street
Glasgow G32 6BS
SCOTLAND

Simmering-Graz-Pauke AG
Brehmstrasse 16
1110 Vienna
AUSTRIA

Skodaexport
Vaclauske Nam. 56
113 32 Prague
CZECHOSLOVAKIA

Stein Industrie
19, avenue Morane-Saulnier
Bp 74
F-78149 Velizy Villacoublay
FRANCE

Steinmuller GmbH, L&C
Postfach 1949
D-527 Gummersbach
FEDERAL REPUBLIC OF GERMANY

Sulzer Brothers Ltd.
CH-8401 Winterthur
SWITZERLAND

VEW Bohler
Kleeblattgasse 4
A-1010 Vienna
AUSTRIA

Voest-Alpine AG
Postfach 2
A-4010 Linz
AUSTRIA

Waagner-Biro AG
Stadlauerstrasse 54
A-1220 Wien
AUSTRIA

Thos. J. Ward, Ltd.
Savile Street
Sheffield S4 7UL
UNITED KINGDOM

Appendix E DETAILED RESULTS OF FINANCIAL/ECONOMIC EVALUATION

E.1

CONSERVATION PROJECT FINANCIAL/ECONOMIC EVALUATION

BOILER PLANT REHABILITATION #1

Prepared for:
MR. PALITA SUBASINGHE
SRI LANKA TYRE CORPORATION
KELANIYA, SRI LANKA

Prepared by:
EDMAC
Ministry of Power and Energy
50, Sir Chittampalam A. Gardiner Mawatha
Colombo -02, Sri Lanka

JUNE 22, 1984

129

ACKNOWLEDGEMENT

This feasibility study was conducted under a joint program of the Sri Lanka Ministry of Power and Energy and the United States Agency for International Development. The analyses for the study were performed using a conservation project financial evaluation model developed by Hagler, Bailly & Company under contract to the Office of Energy, Bureau for Science and Technology, U.S. AID. For information on the model, contact:

Pamela Baldwin, Project Officer
Energy Policy Development and Conservation Project
S&T/EY--USAID
Washington, D.C. USA 20523
(703) 235-8918

or

Hagler, Bailly & Company
2301 M Street NW
Washington, DC USA 20037
(202) 463-7575
Telex: 710-822-1150

TABLE OF CONTENTS

Summary Project Information	Page 1
Summary Results of Financial Analysis	Page 2
Development Period Financial Summary	Page 3
Project Financial Analysis	Page 4
Summary Results Of Sensitivity Analysis	Page 8
Summary Results Of Social Value And Foreign Currency Requirements Analyses	Page 9
Social Value Analysis	Page 10
Foreign Currency Requirements Analysis	Page 14

LIST OF ABBREVIATIONS USED IN THIS REPORT:

CAP: Capital
DVL: Development
ENG: Engineering
IND: Indirect
PRD: Period
RQRD: Required
Q: Quantity
OPER & MAINT: Operating & Maintenance

SUMMARY PROJECT INFORMATION

Project Name: BOILER PLANT REHABILITATION #1

Project Location: KELANIYA, SRI LANKA

Company: SRI LANKA TYRE CORPORATION

Company Contact: MR. PALITA SUBASINGHE, SENIOR POWER ENGINEER

Telephone: 521-241

Project Description:

This study is concerned with replacing an inefficient boiler plant with modern packaged boilers having an efficiency of 80%. The boilers would be fired on furnace oil with 1000 sec. viscosity. The existing boilers are operating at an efficiency of about 54% on the basis of a recent energy audit.

Start of Project Development: 3q/1984

Start of Project Operation: 4q/1985

14V

SUMMARY RESULTS OF FINANCIAL ANALYSIS

BOILER PLANT REHABILITATION #1

All Monetary Values In: Rs(000)

PROJECT SCHEDULE
DEVELOPMENT STARTS: 3q/1984
OPERATIONS START: 4q/1985
LAST TIME PERIOD IN ANALYSIS: 2q/1994

DEVELOPMENT PERIOD COSTS
TOTAL DIRECT CAPITAL COST: 13007
TOTAL DIRECT DVL PERIOD COST (includes interest): 13782
TOTAL INDIRECT DVL PERIOD COST: 0

FINANCIAL STRUCTURE
DEBT FRACTION: 60.0%
TOTAL DEBT REQUIRED: 8269
TOTAL EQUITY CONTRIBUTED: 5513

DEBT TERMS
DEVELOPMENT PRD INTEREST RATE: 14.0%
OPERATING PERIOD INTEREST RATE: 14.0%
OPERATING PERIOD DEBT TERM: 32 QUARTERS
DEBT MORATORIUM PERIOD: 3 QUARTERS

MARGINAL TAX RATE: 50.0%

FINANCIAL PERFORMANCE

TARGET AFTER TAX RETURN ON EQUITY: 20.0%
PRESENT VALUE OF AFTER TAX CASH FLOW
AT 20.0%: 18973
INTERNAL RATE OF RETURN: 98.1%
CUMULATIVE CASH FLOW BECOMES POSITIVE IN 3q/1986.

DEVELOPMENT PERIOD FINANCIAL SUMMARY
BOILER PLANT REHABILITATION #1

All Monetary Values In: Rs(000)

TIME PERIOD	3q/1984	4q/1984	1q/1985	2q/1985	3q/1985
ENG/DESIGN COST	137	274	562	144	111
DIRECT CAPITAL COST	4563	1926	4279	800	212
DVL PRD INTEREST AT 14.0%	0	99	147	252	277
TOTAL FINANCING RQRD	4700	2299	4988	1196	599
EQUITY CONTRIBUTED	1880	919	1995	478	240
DEBT REQUIRED	2820	1379	2993	717	359
CUMULATIVE EQUITY	1880	2799	4795	5273	5513
CUMULATIVE DEBT	2820	4199	7192	7910	8269
CUMULATIVE CAPITAL	4700	6999	11987	13183	13782
DVL COST EXPENSED	137	274	562	144	111
DVL COST DEPRECIATED	4563	1926	4279	800	212
INDIRECT DVL COST	0	0	0	0	0
CUMULATIVE IND COST	0	0	0	0	0

144

FINANCIAL ANALYSIS BY TIME PERIOD
BOILER PLANT REHABILITATION #1
All Monetary Values In: Rs(000)

TIME PERIOD	3q/1984	4q/1984	1q/1985	2q/1985	3q/1985	4q/1985	1q/1986	2q/1986	3q/1986	4q/1986
PROJECT REVENUES										
ENERGY SAVED (TONNES OF OIL)	0	0	0	0	0	433	433	433	433	433
PRICE ENERGY SAVED	0.00	0.00	0.00	0.00	0.00	5.51	5.67	5.83	6.00	6.17
VALUE ENERGY SAVED	0	0	0	0	0	2387	2456	2526	2599	2673
ENERGY SOLD ()	0	0	0	0	0	0	0	0	0	0
PRICE ENERGY SOLD	0.00	0.00	0.00	0.00	0.00	0.00	0.00	0.00	0.00	0.00
VALUE ENERGY SOLD	0	0	0	0	0	0	0	0	0	0
TOTAL REVENUE	0	0	0	0	0	2387	2456	2526	2599	2673
BEFORE TAX COSTS										
ENERGY USED ()	0	0	0	0	0	0	0	0	0	0
PRICE ENERGY USED	0.00	0.00	0.00	0.00	0.00	0.00	0.00	0.00	0.00	0.00
VALUE ENERGY USED	0	0	0	0	0	0	0	0	0	0
DVL PRD EXPENSE	137	274	562	144	111	0	0	0	0	0
DVL PRD INTEREST	0	99	147	252	277	289	0	0	0	0
INDIRECT DVL COST	0	0	0	0	0	0	0	0	0	0
OPER & MAINT EXPENSE	0	0	0	0	0	76	78	80	82	84
OTHER OPER PRD COST	0	0	0	0	0	0	0	0	0	0
OPER PRD INTEREST	0	0	0	0	0	0	289	289	289	289
DEPRECIATION	0	0	0	0	0	552	552	552	552	552
TOTAL COST	137	373	709	395	387	918	919	921	923	925
TAXABLE INCOME	-137	-373	-709	-395	-387	1469	1536	1605	1676	1748
INCOME TAX	-69	-187	-355	-198	-194	735	768	802	838	874
AFTER TAX OUTLAYS										
DEBT PRINCIPAL	0	0	0	0	0	0	0	0	0	144
EQUITY CONTRIBUTED	1880	919	1995	478	240	0	0	0	0	0
TOTAL AFTER TAX OUTLAYS	1880	919	1995	478	240	0	0	0	0	144
AFTER-TAX CASH FLOW	-1811	-733	-1641	-281	-46	1287	1320	1355	1390	1282
CUMULATIVE CASH FLOW	-1811	-2544	-4185	-4466	-4512	-3225	-1904	-550	840	2122

FINANCIAL ANALYSIS BY TIME PERIOD
BOILER PLANT REHABILITATION #1
All Monetary Values In: Rs(000)

TIME PERIOD	1q/1987	2q/1987	3q/1987	4q/1987	1q/1988	2q/1988	3q/1988	4q/1988	1q/1989	2q/1989
PROJECT REVENUES										
ENERGY SAVED (TONNES OF OIL)	433	433	433	433	433	433	433	433	433	433
PRICE ENERGY SAVED	6.35	6.53	6.72	6.92	7.11	7.32	7.53	7.74	7.97	8.20
VALUE ENERGY SAVED	2750	2829	2911	2994	3080	3169	3260	3354	3450	3549
ENERGY SOLD ()	0	0	0	0	0	0	0	0	0	0
PRICE ENERGY SOLD	0.00	0.00	0.00	0.00	0.00	0.00	0.00	0.00	0.00	0.00
VALUE ENERGY SOLD	0	0	0	0	0	0	0	0	0	0
TOTAL REVENUE	2750	2829	2911	2994	3080	3169	3260	3354	3450	3549
BEFORE TAX COSTS										
ENERGY USED ()	0	0	0	0	0	0	0	0	0	0
PRICE ENERGY USED	0.00	0.00	0.00	0.00	0.00	0.00	0.00	0.00	0.00	0.00
VALUE ENERGY USED	0	0	0	0	0	0	0	0	0	0
DVL PRD EXPENSE	0	0	0	0	0	0	0	0	0	0
DVL PRD INTEREST	0	0	0	0	0	0	0	0	0	0
INDIRECT DVL COST	0	0	0	0	0	0	0	0	0	0
OPER & MAINT EXPENSE	86	88	90	92	94	96	99	101	104	106
OTHER OPER PRD COST	0	0	0	0	0	0	0	0	0	0
OPER PRD INTEREST	284	279	274	268	262	256	250	244	237	230
DEPRECIATION	552	552	552	552	552	552	552	552	552	552
TOTAL COST	922	919	916	912	909	905	901	897	893	888
TAXABLE INCOME	1828	1910	1995	2082	2172	2264	2359	2456	2557	2661
INCOME TAX	914	955	997	1041	1086	1132	1179	1228	1279	1330
AFTER TAX OUTLAYS										
DEBT PRINCIPAL	149	154	160	166	171	177	183	190	197	203
EQUITY CONTRIBUTED	0	0	0	0	0	0	0	0	0	0
TOTAL AFTER TAX OUTLAYS	149	154	160	166	171	177	183	190	197	203
AFTER-TAX CASH FLOW	1317	1353	1390	1428	1467	1507	1548	1590	1634	1679
CUMULATIVE CASH FLOW	3439	4792	6182	7609	9076	10583	12131	13721	15355	17034

FINANCIAL ANALYSIS BY TIME PERIOD
BOILER PLANT REHABILITATION #1
All Monetary Values In: Rs(000)

TIME PERIOD	3q/1989	4q/1989	1q/1990	2q/1990	3q/1990	4q/1990	1q/1991	2q/1991	3q/1991	4q/1991
PROJECT REVENUES										
ENERGY SAVED (TONNES OF OIL)	433	433	433	433	433	433	433	433	433	433
PRICE ENERGY SAVED	8.43	8.67	8.92	9.18	9.44	9.72	9.99	10.28	10.58	10.88
VALUE ENERGY SAVED	3651	3756	3864	3975	4089	4207	4328	4452	4580	4711
ENERGY SOLD ()	0	0	0	0	0	0	0	0	0	0
PRICE ENERGY SOLD	0.00	0.00	0.00	0.00	0.00	0.00	0.00	0.00	0.00	0.00
VALUE ENERGY SOLD	0	0	0	0	0	0	0	0	0	0
TOTAL REVENUE	3651	3756	3864	3975	4089	4207	4328	4452	4580	4711
BEFORE TAX COSTS										
ENERGY USED ()	0	0	0	0	0	0	0	0	0	0
PRICE ENERGY USED	0.00	0.00	0.00	0.00	0.00	0.00	0.00	0.00	0.00	0.00
VALUE ENERGY USED	0	0	0	0	0	0	0	0	0	0
DVL PRD EXPENSE	0	0	0	0	0	0	0	0	0	0
DVL PRD INTEREST	0	0	0	0	0	0	0	0	0	0
INDIRECT DVL COST	0	0	0	0	0	0	0	0	0	0
OPER & MAINT EXPENSE	109	111	114	117	120	122	125	128	131	135
OTHER OPER PRD COST	0	0	0	0	0	0	0	0	0	0
OPER PRD INTEREST	223	216	208	200	192	184	175	166	156	147
DEPRECIATION	552	184	184	184	184	184	184	184	184	184
TOTAL COST	884	511	506	501	496	490	484	478	472	465
TAXABLE INCOME	2767	3245	3358	3474	3594	3717	3843	3974	4108	4246
INCOME TAX	1384	1622	1679	1737	1797	1858	1922	1987	2054	2123
AFTER TAX OUTLAYS										
DEBT PRINCIPAL	211	218	226	233	242	250	259	268	277	287
EQUITY CONTRIBUTED	0	0	0	0	0	0	0	0	0	0
TOTAL AFTER TAX OUTLAYS	211	218	226	233	242	250	259	268	277	287
AFTER-TAX CASH FLOW	1725	1589	1637	1688	1739	1792	1847	1903	1961	2020
CUMULATIVE CASH FLOW	18759	20348	21985	23673	25412	27205	29051	30954	32915	34935

FINANCIAL ANALYSIS BY TIME PERIOD
BOILER PLANT REHABILITATION #1
All Monetary Values In: Rs(000)

TIME PERIOD	1q/1992	2q/1992	3q/1992	4q/1992	1q/1993	2q/1993	3q/1993	4q/1993	1q/1994	2q/1994
PROJECT REVENUES										
ENERGY SAVED (TONNES OF OIL)	433	433	433	433	433	433	433	433	433	433
PRICE ENERGY SAVED	11.19	11.52	11.85	12.19	12.54	12.90	13.27	13.65	14.04	14.44
VALUE ENERGY SAVED	4847	4986	5129	5277	5428	5584	5745	5910	6080	6255
ENERGY SOLD ()	0	0	0	0	0	0	0	0	0	0
PRICE ENERGY SOLD	0.00	0.00	0.00	0.00	0.00	0.00	0.00	0.00	0.00	0.00
VALUE ENERGY SOLD	0	0	0	0	0	0	0	0	0	0
TOTAL REVENUE	4847	4986	5129	5277	5428	5584	5745	5910	6080	6255
BEFORE TAX COSTS										
ENERGY USED ()	0	0	0	0	0	0	0	0	0	0
PRICE ENERGY USED	0.00	0.00	0.00	0.00	0.00	0.00	0.00	0.00	0.00	0.00
VALUE ENERGY USED	0	0	0	0	0	0	0	0	0	0
DVL PRD EXPENSE	0	0	0	0	0	0	0	0	0	0
DVL PRD INTEREST	0	0	0	0	0	0	0	0	0	0
INDIRECT DVL COST	0	0	0	0	0	0	0	0	0	0
OPER & MAINT EXPENSE	138	141	145	148	152	155	159	163	167	171
OTHER OPER PRD COST	0	0	0	0	0	0	0	0	0	0
OPER PRD INTEREST	137	126	115	104	93	81	69	56	43	29
DEPRECIATION	184	184	184	184	184	184	184	0	0	0
TOTAL COST	459	451	444	436	429	420	412	219	209	200
TAXABLE INCOME	4388	4535	4685	4840	5000	5164	5333	5691	5871	6055
INCOME TAX	2194	2267	2343	2420	2500	2582	2667	2846	2935	3027
AFTER TAX OUTLAYS										
DEBT PRINCIPAL	297	307	318	329	341	353	365	378	391	405
EQUITY CONTRIBUTED	0	0	0	0	0	0	0	0	0	0
TOTAL AFTER TAX OUTLAYS	297	307	318	329	341	353	365	378	391	405
AFTER-TAX CASH FLOW	2081	2144	2209	2275	2343	2413	2486	2468	2544	2623
CUMULATIVE CASH FLOW	37017	39161	41369	43644	45987	48401	50886	53354	55898	58521

SUMMARY RESULTS OF SENSITIVITY ANALYSIS
BOILER PLANT REHABILITATION #1

BASE OR EXPECTED CASE

PRESENT VALUE OF AFTER TAX CASH FLOW
AT 20.0%: 18973
INTERNAL RATE OF RETURN: 98.1%
CUMULATIVE CASH FLOW BECOMES POSITIVE IN 3q/1986.

ENERGY SAVINGS/SALES 10% GREATER THAN EXPECTED

PRESENT VALUE OF AFTER TAX CASH FLOW
AT 20.0%: 21492
INTERNAL RATE OF RETURN: 105.9%
CUMULATIVE CASH FLOW BECOMES POSITIVE IN 3q/1986.

ENERGY SAVINGS/SALES 10% LESS THAN EXPECTED

PRESENT VALUE OF AFTER TAX CASH FLOW
AT 20.0%: 16455
INTERNAL RATE OF RETURN: 89.9%
CUMULATIVE CASH FLOW BECOMES POSITIVE IN 3q/1986.

DIRECT DEVELOPMENT COSTS 10% GREATER THAN EXPECTED

PRESENT VALUE OF AFTER TAX CASH FLOW
AT 20.0%: 18427
INTERNAL RATE OF RETURN: 90.9%
CUMULATIVE CASH FLOW BECOMES POSITIVE IN 3q/1986.

DIRECT DEVELOPMENT COSTS 10% LESS THAN EXPECTED

PRESENT VALUE OF AFTER TAX CASH FLOW
AT 20.0%: 19519
INTERNAL RATE OF RETURN: 106.5%
CUMULATIVE CASH FLOW BECOMES POSITIVE IN 3q/1986.

INTEREST RATES 2 POINTS HIGHER THAN EXPECTED

PRESENT VALUE OF AFTER TAX CASH FLOW
AT 20.0%: 18748
INTERNAL RATE OF RETURN: 97.2%
CUMULATIVE CASH FLOW BECOMES POSITIVE IN 3q/1986.

INTEREST RATES 2 POINTS LESS THAN EXPECTED

PRESENT VALUE OF AFTER TAX CASH FLOW
AT 20.0%: 19189
INTERNAL RATE OF RETURN: 98.9%
CUMULATIVE CASH FLOW BECOMES POSITIVE IN 3q/1986.

SUMMARY RESULTS OF SOCIAL VALUE AND
FOREIGN CURRENCY REQUIREMENTS ANALYSIS

BOILER PLANT REHABILITATION #1

All Monetary Values In: Rs(000)

PROJECT SCHEDULE
DEVELOPMENT STARTS: 3q/1984
OPERATIONS START: 4q/1985
LAST TIME PERIOD IN ANALYSIS: 2q/1994

SOCIAL DISCOUNT RATE: 10.0%

SOCIAL VALUE RESULTS

TOTAL DEVELOPMENT PERIOD COST: 12361

TOTAL NET BENEFITS IN OPERATING PERIOD: 58277

PRESENT VALUE OF NET BENEFIT STREAM AT
10.0%: 23059

FOREIGN CURRENCY REQUIREMENTS RESULTS

FOREIGN CURRENCY REQUIRED IN DEVELOPMENT PERIOD: 7764

FOREIGN CURRENCY REQUIRED IN OPERATING PERIOD: -119793

PRESENT VALUE OF FOREIGN CURRENCY REQUIREMENT AT
10.0%: -60247

(Positive values mean the project is a net user of foreign currency; Negative values mean the project is a net generator of foreign currency.)

SOCIAL VALUE ANALYSIS BY TIME PERIOD
BOILER PLANT REHABILITATION #1

All Monetary Values In: Rs(000)
Taxes And Interest Not Considered In This Analysis

TIME PERIOD	3q/1984	4q/1984	1q/1985	2q/1985	3q/1985	4q/1985	1q/1986	2q/1986	3q/1986	4q/1986
PROJECT BENEFITS										
ENERGY SAVED (TONNES OF OIL)	0	0	0	0	0	433	433	433	433	433
PRICE ENERGY SAVED	0.00	0.00	0.00	0.00	0.00	3.67	3.69	3.71	3.73	3.75
VALUE ENERGY SAVED	0	0	0	0	0	1591	1599	1606	1614	1622
ENERGY SOLD ()	0	0	0	0	0	0	0	0	0	0
PRICE ENERGY SOLD	0.00	0.00	0.00	0.00	0.00	0.00	0.00	0.00	0.00	0.00
VALUE ENERGY SOLD	0	0	0	0	0	0	0	0	0	0
TOTAL BENEFITS	0	0	0	0	0	1591	1599	1606	1614	1622
PROJECT COSTS										
ENERGY USED ()	0	0	0	0	0	0	0	0	0	0
PRICE ENERGY USED	0.00	0.00	0.00	0.00	0.00	0.00	0.00	0.00	0.00	0.00
VALUE ENERGY USED	0	0	0	0	0	0	0	0	0	0
ENG/DESIGN COST	130	260	522	130	98	0	0	0	0	0
DIRECT CAP COST	4367	1843	4092	730	189	0	0	0	0	0
INDIRECT DVL COST	0	0	0	0	0	0	0	0	0	0
OPER & MAINT EXPENSE	0	0	0	0	0	67	67	67	67	67
OTHER OPER PRD CST	0	0	0	0	0	0	0	0	0	0
TOTAL COST	4497	2104	4614	860	286	67	67	67	67	67
NET BENEFIT STREAM	-4497	-2104	-4614	-860	-286	1523	1531	1539	1547	1555
CUMULATIVE NET BENEFITS	-4497	-6601	-11214	-12075	-12361	-10838	-9307	-7768	-6221	-4666

SOCIAL VALUE ANALYSIS BY TIME PERIOD
BOILER PLANT REHABILITATION #1

All Monetary Values In: Rs(000)
Taxes And Interest Not Considered In This Analysis

TIME PERIOD	1q/1987	2q/1987	3q/1987	4q/1987	1q/1988	2q/1988	3q/1988	4q/1988	1q/1989	2q/1989
PROJECT BENEFITS										
ENERGY SAVED (TONNES OF OIL)	433	433	433	433	433	433	433	433	433	433
PRICE ENERGY SAVED	3.77	3.78	3.80	3.82	3.84	3.86	3.88	3.90	3.92	3.94
VALUE ENERGY SAVED	1630	1639	1647	1655	1663	1671	1680	1688	1696	1705
ENERGY SOLD ()	0	0	0	0	0	0	0	0	0	0
PRICE ENERGY SOLD	0.00	0.00	0.00	0.00	0.00	0.00	0.00	0.00	0.00	0.00
VALUE ENERGY SOLD	0	0	0	0	0	0	0	0	0	0
TOTAL BENEFITS	1630	1639	1647	1655	1663	1671	1680	1688	1696	1705
PROJECT COSTS										
ENERGY USED ()	0	0	0	0	0	0	0	0	0	0
PRICE ENERGY USED	0.00	0.00	0.00	0.00	0.00	0.00	0.00	0.00	0.00	0.00
VALUE ENERGY USED	0	0	0	0	0	0	0	0	0	0
ENG/DESIGN COST	0	0	0	0	0	0	0	0	0	0
DIRECT CAP COST	0	0	0	0	0	0	0	0	0	0
INDIRECT DVL COST	0	0	0	0	0	0	0	0	0	0
OPER & MAINT EXPENSE	67	67	67	67	67	67	67	67	67	67
OTHER OPER PRD CST	0	0	0	0	0	0	0	0	0	0
TOTAL COST	67	67	67	67	67	67	67	67	67	67
NET BENEFIT STREAM	1563	1571	1579	1587	1596	1604	1612	1621	1629	1637
CUMULATIVE NET BENEFITS	-3102	-1531	48	1636	3231	4835	6447	8068	9697	11334

152

SOCIAL VALUE ANALYSIS BY TIME PERIOD
BOILER PLANT REHABILITATION #1

All Monetary Values In: Rs(000)
Taxes And Interest Not Considered In This Analysis

TIME PERIOD	3q/1989	4q/1989	1q/1990	2q/1990	3q/1990	4q/1990	1q/1991	2q/1991	3q/1991	4q/1991
PROJECT BENEFITS										
ENERGY SAVED (TONNES OF OIL)	433	433	433	433	433	433	433	433	433	433
PRICE ENERGY SAVED	3.96	3.98	4.00	4.02	4.04	4.06	4.08	4.10	4.12	4.14
VALUE ENERGY SAVED	1713	1722	1730	1739	1748	1756	1765	1774	1782	1791
ENERGY SOLD ()	0	0	0	0	0	0	0	0	0	0
PRICE ENERGY SOLD	0.00	0.00	0.00	0.00	0.00	0.00	0.00	0.00	0.00	0.00
VALUE ENERGY SOLD	0	0	0	0	0	0	0	0	0	0
TOTAL BENEFITS	1713	1722	1730	1739	1748	1756	1765	1774	1782	1791
PROJECT COSTS										
ENERGY USED ()	0	0	0	0	0	0	0	0	0	0
PRICE ENERGY USED	0.00	0.00	0.00	0.00	0.00	0.00	0.00	0.00	0.00	0.00
VALUE ENERGY USED	0	0	0	0	0	0	0	0	0	0
ENG/DESIGN COST	0	0	0	0	0	0	0	0	0	0
DIRECT CAP COST	0	0	0	0	0	0	0	0	0	0
INDIRECT DVL COST	0	0	0	0	0	0	0	0	0	0
OPER & MAINT EXPENSE	67	67	67	67	67	67	67	67	67	67
OTHER OPER PRD CST	0	0	0	0	0	0	0	0	0	0
TOTAL COST	67	67	67	67	67	67	67	67	67	67
NET BENEFIT STREAM	1646	1654	1663	1671	1680	1689	1697	1706	1715	1724
CUMULATIVE NET BENEFITS	12980	14635	16297	17969	19649	21338	2[illegible]035	24742	26457	28180

SOCIAL VALUE ANALYSIS BY TIME PERIOD
BOILER PLANT REHABILITATION #1

All Monetary Values In: Rs(000)
Taxes And Interest Not Considered In This Analysis

TIME PERIOD	1q/1992	2q/1992	3q/1992	4q/1992	1q/1993	2q/1993	3q/1993	4q/1993	1q/1994	2q/1994
PROJECT BENEFITS										
ENERGY SAVED (TONNES OF OIL)	433	433	433	433	433	433	433	433	433	433
PRICE ENERGY SAVED	4.16	4.18	4.20	4.22	4.24	4.26	4.28	4.30	4.33	4.35
VALUE ENERGY SAVED	1800	1809	1818	1827	1836	1845	1854	1864	1873	1882
ENERGY SOLD ()	0	0	0	0	0	0	0	0	0	0
PRICE ENERGY SOLD	0.00	0.00	0.00	0.00	0.00	0.00	0.00	0.00	0.00	0.00
VALUE ENERGY SOLD	0	0	0	0	0	0	0	0	0	0
TOTAL BENEFITS	1800	1809	1818	1827	1836	1845	1854	1864	1873	1882
PROJECT COSTS										
ENERGY USED ()	0	0	0	0	0	0	0	0	0	0
PRICE ENERGY USED	0.00	0.00	0.00	0.00	0.00	0.00	0.00	0.00	0.00	0.00
VALUE ENERGY USED	0	0	0	0	0	0	0	0	0	0
ENG/DESIGN COST	0	0	0	0	0	0	0	0	0	0
DIRECT CAP COST	0	0	0	0	0	0	0	0	0	0
INDIRECT DVL COST	0	0	0	0	0	0	0	0	0	0
OPER & MAINT EXPENSE	67	67	67	67	67	67	67	67	67	67
OTHER OPER PRD CST	0	0	0	0	0	0	0	0	0	0
TOTAL COST	67	67	67	67	67	67	67	67	67	67
NET BENEFIT STREAM	1733	1742	1751	1760	1769	1778	1787	1796	1806	1815
CUMULATIVE NET BENEFITS	29913	31655	33406	35165	36934	38712	40499	42295	44101	45916

FOREIGN CURRENCY REQUIREMENTS BY TIME PERIOD
BOILER PLANT REHABILITATION #1

All Monetary Values In: Rs(000)
Positive Values Indicate Use Of Foreign Currency
Negative Values Indicate Generation Of Foreign Currency

TIME PERIOD	3q/1984	4q/1984	1q/1985	2q/1985	3q/1985	4q/1985	1q/1986	2q/1986	3q/1986	4q/1986
VALUE ENERGY SAVED	0	0	0	0	0	-2148	-2210	-2274	-2339	-2406
VALUE ENERGY SOLD	0	0	0	0	0	0	0	0	0	0
ENG/DESIGN COST	69	137	281	72	55	0	0	0	0	0
DIRECT CAP COST	2601	1098	2439	456	121	0	0	0	0	0
INDIRECT DVL COST	0	0	0	0	0	0	0	0	0	0
OPER & MAINT EXPENSE	0	0	0	0	0	59	60	61	63	64
ENERGY CONSUMED	0	0	0	0	0	0	0	0	0	0
OTHER OPER PRD CST	0	0	0	0	0	0	0	0	0	0
INTEREST PAYMENTS	0	56	83	142	156	163	163	163	163	163
NET FOREIGN CURRENCY REQUIRED	2669	1290	2803	670	332	-1927	-1987	-2049	-2113	-2179
CUMULATIVE FOREIGN CURRENCY REQUIRED	2669	3960	6763	7433	7764	5838	3851	1802	-311	-2490

FOREIGN CURRENCY REQUIREMENTS BY TIME PERIOD
BOILER PLANT REHABILITATION #1

All Monetary Values In: Rs(000)
Positive Values Indicate Use Of Foreign Currency
Negative Values Indicate Generation Of Foreign Currency

TIME PERIOD	1q/1987	2q/1987	3q/1987	4q/1987	1q/1988	2q/1988	3q/1988	4q/1988	1q/1989	2q/1989
VALUE ENERGY SAVED	-2475	-2546	-2620	-2695	-2772	-2852	-2934	-3018	-3105	-3194
VALUE ENERGY SOLD	0	0	0	0	0	0	0	0	0	0
ENG/DESIGN COST	0	0	0	0	0	0	0	0	0	0
DIRECT CAP COST	0	0	0	0	0	0	0	0	0	0
INDIRECT DVL COST	0	0	0	0	0	0	0	0	0	0
OPER & MAINT EXPENSE	66	68	69	71	73	74	76	78	80	82
ENERGY CONSUMED	0	0	0	0	0	0	0	0	0	0
OTHER OPER PRD CST	0	0	0	0	0	0	0	0	0	0
INTEREST PAYMENTS	160	157	154	151	148	144	141	137	134	130
NET FOREIGN CURRENCY REQUIRED	-2249	-2322	-2396	-2473	-2552	-2633	-2717	-2803	-2892	-2983
CUMULATIVE FOREIGN CURRENCY REQUIRED	-4739	-7061	-9457	-11930	-14482	-17115	-19832	-22635	-25526	-28509

150

FOREIGN CURRENCY REQUIREMENTS BY TIME PERIOD
BOILER PLANT REHABILITATION #1

All Monetary Values In: Rs(000)
Positive Values Indicate Use Of Foreign Currency
Negative Values Indicate Generation Of Foreign Currency

TIME PERIOD	3q/1989	4q/1989	1q/1990	2q/1990	3q/1990	4q/1990	1q/1991	2q/1991	3q/1991	4q/1991
VALUE ENERGY SAVED	-3286	-3380	-3477	-3577	-3680	-3786	-3895	-4007	-4122	-4240
VALUE ENERGY SOLD	0	0	0	0	0	0	0	0	0	0
ENG/DESIGN COST	0	0	0	0	0	0	0	0	0	0
DIRECT CAP COST	0	0	0	0	0	0	0	0	0	0
INDIRECT DVL COST	0	0	0	0	0	0	0	0	0	0
OPER & MAINT EXPENSE	84	86	88	90	92	94	97	99	101	104
ENERGY CONSUMED	0	0	0	0	0	0	0	0	0	0
OTHER OPER PRD CST	0	0	0	0	0	0	0	0	0	0
INTEREST PAYMENTS	126	122	117	113	108	103	98	93	88	83
NET FOREIGN CURRENCY REQUIRED	-3077	-3173	-3273	-3375	-3480	-3588	-3700	-3814	-3933	-4054
CUMULATIVE FOREIGN CURRENCY REQUIRED	-31586	-34759	-38031	-41406	-44886	-48474	-52174	-55989	-59921	-63975

FOREIGN CURRENCY REQUIREMENTS BY TIME PERIOD
BOILER PLANT REHABILITATION #1

All Monetary Values In: Rs(000)
Positive Values Indicate Use Of Foreign Currency
Negative Values Indicate Generation Of Foreign Currency

TIME PERIOD	1q/1992	2q/1992	3q/1992	4q/1992	1q/1993	2q/1993	3q/1993	4q/1993	1q/1994	2q/1994
VALUE ENERGY SAVED	-4362	-4488	-4616	-4749	-4886	-5026	-5170	-5319	-5472	-5629
VALUE ENERGY SOLD	0	0	0	0	0	0	0	0	0	0
ENG/DESIGN COST	0	0	0	0	0	0	0	0	0	0
DIRECT CAP COST	0	0	0	0	0	0	0	0	0	0
INDIRECT DVL COST	0	0	0	0	0	0	0	0	0	0
OPER & MAINT EXPENSE	106	109	111	114	117	120	122	125	128	132
ENERGY CONSUMED	0	0	0	0	0	0	0	0	0	0
OTHER OPER PRD CST	0	0	0	0	0	0	0	0	0	0
INTEREST PAYMENTS	77	71	65	59	52	46	39	31	24	16
NET FOREIGN CURRENCY REQUIRED	-4179	-4308	-4440	-4576	-4717	-4861	-5009	-5162	-5319	-5481
CUMULATIVE FOREIGN CURRENCY REQUIRED	-68154	-72462	-76902	-81478	-86195	-91056	-96065	-101227	-106547	-112028

CONSERVATION PROJECT FINANCIAL/ECONOMIC EVALUATION

BOILER PLANT REHABILITATION #2

Prepared for:
MR. PALITA SUBASINGHE
SRI LANKA TYRE CORPORATION
KELANIYA, SRI LANKA

Prepared by:
EDMAC
Ministry of Power and Energy
50, Sir Chittampalam A. Gardiner Mawatha
Colombo -02,Sri Lanka

JUNE 22, 1984

ACKNOWLEDGEMENT

This feasibility study was conducted under a joint program of the Sri Lanka Ministry of Power and Energy and the United States Agency for International Development. The analyses for the study were performed using a conservation project financial evaluation model developed by Hagler, Bailly & Company under contract to the Office of Energy, Bureau for Science and Technology, U.S. AID. For information on the model, contact:

Pamela Baldwin, Project Officer
Energy Policy Development and Conservation Project
S&T/EY--USAID
Washington, D.C. USA 20523
(703) 235-8918

or

Hagler, Bailly & Company
2301 M Street NW
Washington, DC USA 20037
(202) 463-7575
Telex: 710-822-1150

TABLE OF CONTENTS

Summary Project Information	Page 1
Summary Results of Financial Analysis	Page 2
Development Period Financial Summary	Page 3
Project Financial Analysis	Page 4
Summary Results Of Sensitivity Analysis	Page 8
Summary Results Of Social Value And Foreign Currency Requirements Analyses	Page 9
Social Value Analysis	Page 10
Foreign Currency Requirements Analysis	Page 14

LIST OF ABBREVIATIONS USED IN THIS REPORT:

CAP: Capital
DVL: Development
ENG: Engineering
IND: Indirect
PRD: Period
RQRD: Required
Q: Quantity
OPER & MAINT: Operating & Maintenance

SUMMARY PROJECT INFORMATION

Project Name: BOILER PLANT REHABILITATION #2

Project Location: KELANIYA, SRI LANKA

Company: SRI LANKA TYRE CORPORATION

Company Contact: MR. PALITA SUBASINGHE, SENIOR POWER ENGINEER

Telephone: 521-241

Project Description:

This study is concerned with replacing an inefficient oil-fired boiler plant with modern, packaged multi-fuel fired boilers of high efficiency. The boilers would be fired on a mixture of approximately 85% wood and 15% oil. Boiler efficiency would be expected to increase from 54% to about 72% (wood)/80% (oil).

Start of Project Development: 3q/1984

Start of Project Operation: 1q/1986

SUMMARY RESULTS OF FINANCIAL ANALYSIS

BOILER PLANT REHABILITATION #2

All Monetary Values In: Rs(000)

PROJECT SCHEDULE
DEVELOPMENT STARTS: 3q/1984
OPERATIONS START: 1q/1986
LAST TIME PERIOD IN ANALYSIS: 2q/1994

DEVELOPMENT PERIOD COSTS
TOTAL DIRECT CAPITAL COST: 31592
TOTAL DIRECT DVL PERIOD COST (includes interest): 33797
TOTAL INDIRECT DVL PERIOD COST: 0

FINANCIAL STRUCTURE
DEBT FRACTION: 60.0%
TOTAL DEBT REQUIRED: 20278
TOTAL EQUITY CONTRIBUTED: 13519

DEBT TERMS
DEVELOPMENT PRD INTEREST RATE: 14.0%
OPERATING PERIOD INTEREST RATE: 14.0%
OPERATING PERIOD DEBT TERM: 32 QUARTERS
DEBT MORATORIUM PERIOD: 3 QUARTERS

MARGINAL TAX RATE: 50.0%

FINANCIAL PERFORMANCE

TARGET AFTER TAX RETURN ON EQUITY: 20.0%
PRESENT VALUE OF AFTER TAX CASH FLOW
AT 20.0%: 21344
INTERNAL RATE OF RETURN: 63.7%
CUMULATIVE CASH FLOW BECOMES POSITIVE IN 2q/1987.

DEVELOPMENT PERIOD FINANCIAL SUMMARY
BOILER PLANT REHABILITATION #2

All Monetary Values In: Rs(000)

TIME PERIOD	3q/1984	4q/1984	1q/1985	2q/1985	3q/1985	4q/1985
ENG/DESIGN COST	400	750	768	1049	806	1754
DIRECT CAPITAL COST	7400	6850	6452	3042	1772	550
DVL PRD INTEREST AT 14.0%	0	164	327	485	581	648
TOTAL FINANCING RQRD	7800	7764	7547	4576	3159	2952
EQUITY CONTRIBUTED	3120	3106	3019	1830	1264	1181
DEBT REQUIRED	4680	4658	4528	2745	1896	1771
CUMULATIVE EQUITY	3120	6226	9244	11075	12338	13519
CUMULATIVE DEBT	4680	9338	13866	16612	18507	20278
CUMULATIVE CAPITAL	7800	15564	23111	27686	30846	33797
DVL COST EXPENSED	400	750	768	1049	806	1754
DVL COST DEPRECIATED	7400	6850	6452	3042	1772	550
INDIRECT DVL COST	0	0	0	0	0	0
CUMULATIVE IND COST	0	0	0	0	0	0

164

FINANCIAL ANALYSIS BY TIME PERIOD
BOILER PLANT REHABILITATION #2
All Monetary Values In: Rs(000)

TIME PERIOD	3q/1984	4q/1984	1q/1985	2q/1985	3q/1985	4q/1985	1q/1986	2q/1986	3q/1986	4q/1986
PROJECT REVENUES										
ENERGY SAVED (TONNES OF OIL)	0	0	0	0	0	0	1196	1196	1196	1196
PRICE ENERGY SAVED	0.00	0.00	0.00	0.00	0.00	0.00	5.67	5.83	6.00	6.17
VALUE ENERGY SAVED	0	0	0	0	0	0	6783	6978	7178	7384
ENERGY SOLD ()	0	0	0	0	0	0	0	0	0	0
PRICE ENERGY SOLD	0.00	0.00	0.00	0.00	0.00	0.00	0.00	0.00	0.00	0.00
VALUE ENERGY SOLD	0	0	0	0	0	0	0	0	0	0
TOTAL REVENUE	0	0	0	0	0	0	6783	6978	7178	7384
BEFORE TAX COSTS										
ENERGY USED (TONNES OF WOOD)	0	0	0	0	0	0	3602	3602	3602	3602
PRICE ENERGY USED	0.00	0.00	0.00	0.00	0.00	0.00	0.68	0.69	0.71	0.73
VALUE ENERGY USED	0	0	0	0	0	0	2435	2493	2553	2615
DVL PRD EXPENSE	400	750	768	1049	806	1754	0	0	0	0
DVL PRD INTEREST	0	164	327	485	581	648	710	0	0	0
INDIRECT DVL COST	0	0	0	0	0	0	0	0	0	0
OPER & MAINT EXPENSE	0	0	0	0	0	0	1135	1164	1195	1225
OTHER OPER PRD COST	0	0	0	0	0	0	0	0	0	0
OPER PRD INTEREST	0	0	0	0	0	0	0	710	710	710
DEPRECIATION	0	0	0	0	0	0	1222	1222	1222	1222
TOTAL COST	400	914	1095	1534	1387	2402	5501	5589	5680	5772
TAXABLE INCOME	-400	-914	-1095	-1534	-1387	-2402	1281	1388	1499	1612
INCOME TAX	-200	-457	-547	-767	-693	-1201	641	694	749	806
AFTER TAX OUTLAYS										
DEBT PRINCIPAL	0	0	0	0	0	0	0	0	0	0
EQUITY CONTRIBUTED	3120	3106	3019	1830	1264	1191	0	0	0	0
TOTAL AFTER TAX OUTLAYS	3120	3106	3019	1830	1264	1181	0	0	0	0
AFTER-TAX CASH FLOW	-2920	-2649	-2471	-1063	-570	20	1863	1916	1971	2028
CUMULATIVE CASH FLOW	-2920	-5569	-8040	-9103	-9673	-9653	-7791	-5875	-3904	-1876

FINANCIAL ANALYSIS BY TIME PERIOD
BOILER PLANT REHABILITATION #2
All Monetary Values In: Rs(000)

TIME PERIOD	1q/1987	2q/1987	3q/1987	4q/1987	1q/1988	2q/1988	3q/1988	4q/1988	1q/1989	2q/1989
PROJECT REVENUES										
ENERGY SAVED (TONNES OF OIL)	1196	1196	1196	1196	1196	1196	1196	1196	1196	1196
PRICE ENERGY SAVED	6.35	6.53	6.72	6.92	7.11	7.32	7.53	7.74	7.97	8.20
VALUE ENERGY SAVED	7597	7815	8039	8270	8508	8753	9004	9263	9529	9803
ENERGY SOLD ()	0	0	0	0	0	0	0	0	0	0
PRICE ENERGY SOLD	0.00	0.00	0.00	0.00	0.00	0.00	0.00	0.00	0.00	0.00
VALUE ENERGY SOLD	0	0	0	0	0	0	0	0	0	0
TOTAL REVENUE	7597	7815	8039	8270	8508	8753	9004	9263	9529	9803
BEFORE TAX COSTS										
ENERGY USED (TONNES OF WOOD)	3602	3602	3602	3602	3602	3602	3602	3602	3602	3602
PRICE ENERGY USED	0.74	0.76	0.78	0.80	0.82	0.84	0.86	0.88	0.90	0.92
VALUE ENERGY USED	2678	2743	2809	2876	2946	3017	3090	3164	3240	3319
DVL PRD EXPENSE	0	0	0	0	0	0	0	0	0	0
DVL PRD INTEREST	0	0	0	0	0	0	0	0	0	0
INDIRECT DVL COST	0	0	0	0	0	0	0	0	0	0
OPER & MAINT EXPENSE	1257	1290	1323	1357	1393	1429	1466	1504	1543	1583
OTHER OPER PRD COST	0	0	0	0	0	0	0	0	0	0
OPER PRD INTEREST	710	697	685	671	658	643	629	613	598	581
DEPRECIATION	1222	1222	1222	1222	1222	1222	1222	1222	1222	1222
TOTAL COST	5867	5952	6038	6127	6218	6311	6406	6503	6603	6704
TAXABLE INCOME	1730	1863	2001	2143	2290	2442	2598	2760	2927	3099
INCOME TAX	865	932	1001	1072	1145	1221	1299	1380	1463	1549
AFTER TAX OUTLAYS										
DEBT PRINCIPAL	354	366	379	392	406	420	435	450	466	482
EQUITY CONTRIBUTED	0	0	0	0	0	0	0	0	0	0
TOTAL AFTER TAX OUTLAYS	354	366	379	392	406	420	435	450	466	482
AFTER-TAX CASH FLOW	1733	1787	1843	1901	1961	2023	2086	2152	2219	2289
CUMULATIVE CASH FLOW	-143	1645	3488	5390	7351	9373	11460	13611	15831	18120

FINANCIAL ANALYSIS BY TIME PERIOD
BOILER PLANT REHABILITATION #2
All Monetary Values In: Rs(000)

TIME PERIOD	3q/1989	4q/1989	1q/1990	2q/1990	3q/1990	4q/1990	1q/1991	2q/1991	3q/1991	4q/1991
PROJECT REVENUES										
ENERGY SAVED (TONNES OF OIL)	1196	1196	1196	1196	1196	1196	1196	1196	1196	1196
PRICE ENERGY SAVED	8.43	8.67	8.92	9.18	9.44	9.72	9.99	10.28	10.58	10.88
VALUE ENERGY SAVED	10085	10374	10673	10979	11295	11619	11953	12297	12650	13014
ENERGY SOLD ()	0	0	0	0	0	0	0	0	0	0
PRICE ENERGY SOLD	0.00	0.00	0.00	0.00	0.00	0.00	0.00	0.00	0.00	0.00
VALUE ENERGY SOLD	0	0	0	0	0	0	0	0	0	0
TOTAL REVENUE	10085	10374	10673	10979	11295	11619	11953	12297	12650	13014
BEFORE TAX COSTS										
ENERGY USED (TONNES OF WOOD)	3602	3602	3602	3602	3602	3602	3602	3602	3602	3602
PRICE ENERGY USED	0.94	0.97	0.99	1.01	1.04	1.06	1.09	1.11	1.14	1.17
VALUE ENERGY USED	3399	3481	3564	3650	3738	3829	3921	4015	4112	4211
DVL PRD EXPENSE	0	0	0	0	0	0	0	0	0	0
DVL PRD INTEREST	0	0	0	0	0	0	0	0	0	0
INDIRECT DVL COST	0	0	0	0	0	0	0	0	0	0
OPER & MAINT EXPENSE	1624	1666	1709	1753	1798	1845	1893	1942	1992	2044
OTHER OPER PRD COST	0	0	0	0	0	0	0	0	0	0
OPER PRD INTEREST	565	547	529	510	491	471	450	429	406	383
DEPRECIATION	1222	1222	407	407	407	407	407	407	407	407
TOTAL COST	6809	6915	6210	6321	6435	6552	6671	6793	6918	7046
TAXABLE INCOME	3276	3459	4463	4658	4860	5068	5282	5504	5732	5968
INCOME TAX	1638	1730	2232	2329	2430	2534	2641	2752	2866	2984
AFTER TAX OUTLAYS										
DEBT PRINCIPAL	499	516	534	553	573	593	613	635	657	680
EQUITY CONTRIBUTED	0	0	0	0	0	0	0	0	0	0
TOTAL AFTER TAX OUTLAYS	499	516	534	553	573	593	613	635	657	680
AFTER-TAX CASH FLOW	2361	2435	2104	2183	2265	2349	2435	2524	2616	2711
CUMULATIVE CASH FLOW	20481	22916	25020	27204	29468	31817	34252	36776	39392	42104

FINANCIAL ANALYSIS BY TIME PERIOD
BOILER PLANT REHABILITATION #2
All Monetary Values In: Rs(000)

TIME PERIOD	1q/1992	2q/1992	3q/1992	4q/1992	1q/1993	2q/1993	3q/1993	4q/1993	1q/1994	2q/1994
PROJECT REVENUES										
ENERGY SAVED (TONNES OF OIL)	1196	1196	1196	1196	1196	1196	1196	1196	1196	1196
PRICE ENERGY SAVED	11.19	11.52	11.85	12.19	12.54	12.90	13.27	13.65	14.04	14.44
VALUE ENERGY SAVED	13388	13772	14168	14575	14994	15425	15868	16324	16794	17276
ENERGY SOLD ()	0	0	0	0	0	0	0	0	0	0
PRICE ENERGY SOLD	0.00	0.00	0.00	0.00	0.00	0.00	0.00	0.00	0.00	0.00
VALUE ENERGY SOLD	0	0	0	0	0	0	0	0	0	0
TOTAL REVENUE	13388	13772	14168	14575	14994	15425	15868	16324	16794	17276
BEFORE TAX COSTS										
ENERGY USED (TONNES OF WOOD)	3602	3602	3602	3602	3602	3602	3602	3602	3602	3602
PRICE ENERGY USED	1.20	1.23	1.26	1.[illegible]	1.32	1.35	1.38	1.41	1.45	1.48
VALUE ENERGY USED	4313	4417	4524	4633	4744	4859	4976	5096	5219	5345
DVL PRD EXPENSE	0	0	0	0	0	0	0	0	0	0
DVL PRD INTEREST	0	0	0	0	0	0	0	0	0	0
INDIRECT DVL COST	0	0	0	0	0	0	0	0	0	0
OPER & MAINT EXPENSE	2097	2151	2207	2264	2322	2383	2444	2508	2573	2639
OTHER OPER PRD COST	0	0	0	0	0	0	0	0	0	0
OPER PRD INTEREST	360	335	310	283	256	228	198	168	137	104
DEPRECIATION	407	407	407	407	407	407	407	407	0	0
TOTAL COST	7177	7310	7447	7587	7730	7876	8026	8179	7928	8088
TAXABLE INCOME	6211	6462	6721	6988	7264	7549	7843	8146	8865	9188
INCOME TAX	3106	3231	3361	3494	3632	3774	3921	4073	4433	4594
AFTER TAX OUTLAYS										
DEBT PRINCIPAL	704	728	754	780	808	836	865	895	927	959
EQUITY CONTRIBUTED	0	0	0	0	0	0	0	0	0	0
TOTAL AFTER TAX OUTLAYS	704	728	754	780	808	836	865	895	927	959
AFTER-TAX CASH FLOW	2809	2910	3014	3121	3232	3346	3463	3585	3506	3635
CUMULATIVE CASH FLOW	44913	47823	50837	53958	57190	60536	63999	67584	71090	74725

SUMMARY RESULTS OF SENSITIVITY ANALYSIS
BOILER PLANT REHABILITATION #2

BASE OR EXPECTED CASE

PRESENT VALUE OF AFTER TAX CASH FLOW
AT 20.0%: 21344
INTERNAL RATE OF RETURN: 63.7%
CUMULATIVE CASH FLOW BECOMES POSITIVE IN 2q/1987.

ENERGY SAVINGS/SALES 10% GREATER THAN EXPECTED

PRESENT VALUE OF AFTER TAX CASH FLOW
AT 20.0%: 28037
INTERNAL RATE OF RETURN: 73.9%
CUMULATIVE CASH FLOW BECOMES POSITIVE IN 1q/1987.

ENERGY SAVINGS/SALES 10% LESS THAN EXPECTED

PRESENT VALUE OF AFTER TAX CASH FLOW
AT 20.0%: 14650
INTERNAL RATE OF RETURN: 52.5%
CUMULATIVE CASH FLOW BECOMES POSITIVE IN 3q/1987.

DIRECT DEVELOPMENT COSTS 10% GREATER THAN EXPECTED

PRESENT VALUE OF AFTER TAX CASH FLOW
AT 20.0%: 20109
INTERNAL RATE OF RETURN: 58.8%
CUMULATIVE CASH FLOW BECOMES POSITIVE IN 2q/1987.

DIRECT DEVELOPMENT COSTS 10% LESS THAN EXPECTED

PRESENT VALUE OF AFTER TAX CASH FLOW
AT 20.0%: 22578
INTERNAL RATE OF RETURN: 69.3%
CUMULATIVE CASH FLOW BECOMES POSITIVE IN 1q/1987.

INTEREST RATES 2 POINTS HIGHER THAN EXPECTED

PRESENT VALUE OF AFTER TAX CASH FLOW
AT 20.0%: 20818
INTERNAL RATE OF RETURN: 62.8%
CUMULATIVE CASH FLOW BECOMES POSITIVE IN 2q/1987.

INTEREST RATES 2 POINTS LESS THAN EXPECTED

PRESENT VALUE OF AFTER TAX CASH FLOW
AT 20.0%: 21846
INTERNAL RATE OF RETURN: 64.6%
CUMULATIVE CASH FLOW BECOMES POSITIVE IN 1q/1987.

SUMMARY RESULTS OF SOCIAL VALUE AND
FOREIGN CURRENCY REQUIREMENTS ANALYSIS

BOILER PLANT REHABILITATION #2

All Monetary Values In: Rs(000)

PROJECT SCHEDULE
DEVELOPMENT STARTS: 3q/1984
OPERATIONS START: 1q/1986
LAST TIME PERIOD IN ANALYSIS: 2q/1994

SOCIAL DISCOUNT RATE: 10.0%

SOCIAL VALUE RESULTS

TOTAL DEVELOPMENT PERIOD COST: 29933

TOTAL NET BENEFITS IN OPERATING PERIOD: 102685

PRESENT VALUE OF NET BENEFIT STREAM AT
10.0%: 32601

FOREIGN CURRENCY REQUIREMENTS RESULTS

FOREIGN CURRENCY REQUIRED IN DEVELOPMENT PERIOD: 22159

FOREIGN CURRENCY REQUIRED IN OPERATING PERIOD: -292456

PRESENT VALUE OF FOREIGN CURRENCY REQUIREMENT AT
10.0%: -142523

(Positive values mean the project is a net user of foreign currency; Negative values mean the project is a net generator of foreign currency.)

SOCIAL VALUE ANALYSIS BY TIME PERIOD
BOILER PLANT REHABILITATION #2

All Monetary Values In: Rs(000)
Taxes And Interest Not Considered In This Analysis

TIME PERIOD	3q/1984	4q/1984	1q/1985	2q/1985	3q/1985	4q/1985	1q/1986	2q/1986	3q/1986	4q/1986
PROJECT BENEFITS										
ENERGY SAVED (TONNES OF OIL)	0	0	0	0	0	0	1196	1196	1196	1196
PRICE ENERGY SAVED	0.00	0.00	0.00	0.00	0.00	0.00	5.05	5.07	5.10	5.12
VALUE ENERGY SAVED	0	0	0	0	0	0	6034	6064	6094	6125
ENERGY SOLD ()	0	0	0	0	0	0	0	0	0	0
PRICE ENERGY SOLD	0.00	0.00	0.00	0.00	0.00	0.00	0.00	0.00	0.00	0.00
VALUE ENERGY SOLD	0	0	0	0	0	0	0	0	0	0
TOTAL BENEFITS	0	0	0	0	0	0	6034	6064	6094	6125
PROJECT COSTS										
ENERGY USED (TONNES OF WOOD)	0	0	0	0	0	0	3602	3602	3602	3602
PRICE ENERGY USED	0.00	0.00	0.00	0.00	0.00	0.00	0.54	0.54	0.54	0.54
VALUE ENERGY USED	0	0	0	0	0	0	1945	1945	1945	1945
ENG/DESIGN COST	389	729	729	972	729	1563	0	0	0	0
DIRECT CAP COST	7175	6642	6108	2812	1600	485	0	0	0	0
INDIRECT DVL COST	0	0	0	0	0	0	0	0	0	0
OPER & MAINT EXPENSE	0	0	0	0	0	0	1353	1353	1353	1353
OTHER OPER PRD CST	0	0	0	0	0	0	0	0	0	0
TOTAL COST	7564	7371	6837	3784	2329	2048	3298	3298	3298	3298
NET BENEFIT STREAM	-7564	-7371	-6837	-3784	-2329	-2048	2736	2766	2796	2826
CUMULATIVE NET BENEFITS	-7564	-14935	-21772	-25556	-27885	-29933	-27197	-24431	-21635	-18808

SOCIAL VALUE ANALYSIS BY TIME PERIOD
BOILER PLANT REHABILITATION #2

All Monetary Values In: Rs(000)
Taxes And Interest Not Considered In This Analysis

TIME PERIOD	1q/1987	2q/1987	3q/1987	4q/1987	1q/1988	2q/1988	3q/1988	4q/1988	1q/1989	2q/1989
PROJECT BENEFITS										
ENERGY SAVED (TONNES OF OIL)	1196	1196	1196	1196	1196	1196	1196	1196	1196	1196
PRICE ENERGY SAVED	5.15	5.17	5.20	5.22	5.25	5.28	5.30	5.33	5.35	5.38
VALUE ENERGY SAVED	6155	6186	6216	6247	6278	6309	6341	6372	6404	6435
ENERGY SOLD ()	0	0	0	0	0	0	0	0	0	0
PRICE ENERGY SOLD	0.00	0.00	0.00	0.00	0.00	0.00	0.00	0.00	0.00	0.00
VALUE ENERGY SOLD	0	0	0	0	0	0	0	0	0	0
TOTAL BENEFITS	6155	6186	6216	6247	6278	6309	6341	6372	6404	6435
PROJECT COSTS										
ENERGY USED (TONNES OF WOOD)	3602	3602	3602	3602	3602	3602	3602	3602	3602	3602
PRICE ENERGY USED	0.54	0.54	0.54	0.54	0.54	0.54	0.54	0.54	0.54	0.54
VALUE ENERGY USED	1945	1945	1945	1945	1945	1945	1945	1945	1945	1945
ENG/DESIGN COST	0	0	0	0	0	0	0	0	0	0
DIRECT CAP COST	0	0	0	0	0	0	0	0	0	0
INDIRECT DVL COST	0	0	0	0	0	0	0	0	0	0
OPER & MAINT EXPENSE	1353	1353	1353	1353	1353	1353	1353	1353	1353	1353
OTHER OPER PRD CST	0	0	0	0	0	0	0	0	0	0
TOTAL COST	3298	3298	3298	3298	3298	3298	3298	3298	3298	3298
NET BENEFIT STREAM	2857	2887	2918	2949	2980	3011	3042	3074	3105	3137
CUMULATIVE NET BENEFITS	-15952	-13064	-10146	-7197	-4217	-1206	1836	4910	8015	11153

172

SOCIAL VALUE ANALYSIS BY TIME PERIOD
BOILER PLANT REHABILITATION #2

All Monetary Values In: Rs(000)
Taxes And Interest Not Considered In This Analysis

TIME PERIOD	3q/1989	4q/1989	1q/1990	2q/1990	3q/1990	4q/1990	1q/1991	2q/1991	3q/1991	4q/1991
PROJECT BENEFITS										
ENERGY SAVED (TONNES OF OIL)	1196	1196	1196	1196	1196	1196	1196	1196	1196	1196
PRICE ENERGY SAVED	5.41	5.43	5.46	5.49	5.52	5.54	5.57	5.60	5.63	5.65
VALUE ENERGY SAVED	6467	6499	6532	6564	6597	6629	6662	6695	6729	6762
ENERGY SOLD ()	0	0	0	0	0	0	0	0	0	0
PRICE ENERGY SOLD	0.00	0.00	0.00	0.00	0.00	0.00	0.00	0.00	0.00	0.00
VALUE ENERGY SOLD	0	0	0	0	0	0	0	0	0	0
TOTAL BENEFITS	6467	6499	6532	6564	6597	6629	6662	6695	6729	6762
PROJECT COSTS										
ENERGY USED (TONNES OF WOOD)	3602	3602	3602	3602	3602	3602	3602	3602	3602	3602
PRICE ENERGY USED	0.54	0.54	0.54	0.54	0.54	0.54	0.70	0.70	0.70	0.70
VALUE ENERGY USED	1945	1945	1945	1945	1945	1945	2521	2521	2521	2521
ENG/DESIGN COST	0	0	0	0	0	0	0	0	0	0
DIRECT CAP COST	0	0	0	0	0	0	0	0	0	0
INDIRECT DVL COST	0	0	0	0	0	0	0	0	0	0
OPER & MAINT EXPENSE	1353	1353	1353	1353	1353	1353	1353	1353	1353	1353
OTHER OPER PRD CST	0	0	0	0	0	0	0	0	0	0
TOTAL COST	3298	3298	3298	3298	3298	3298	3875	3875	3875	3875
NET BENEFIT STREAM	3169	3201	3234	3266	3299	3331	2788	2821	2854	2888
CUMULATIVE NET BENEFITS	14322	17523	20757	24022	27321	30652	33440	36261	39115	42003

SOCIAL VALUE ANALYSIS BY TIME PERIOD
BOILER PLANT REHABILITATION #2

All Monetary Values In: Rs(000)
Taxes And Interest Not Considered In This Analysis

TIME PERIOD	1q/1992	2q/1992	3q/1992	4q/1992	1q/1993	2q/1993	3q/1993	4q/1993	1q/1994	2q/1994
PROJECT BENEFITS										
ENERGY SAVED (TONNES OF OIL)	1196	1196	1196	1196	1196	1196	1196	1196	1196	1196
PRICE ENERGY SAVED	5.68	5.71	5.74	5.77	5.80	5.82	5.85	5.88	5.91	5.94
VALUE ENERGY SAVED	6796	6829	6863	6897	6931	6966	7000	7035	7070	7105
ENERGY SOLD ()	0	0	0	0	0	0	0	0	0	0
PRICE ENERGY SOLD	0.00	0.00	0.00	0.00	0.00	0.00	0.00	0.00	0.00	0.00
VALUE ENERGY SOLD	0	0	0	0	0	0	0	0	0	0
TOTAL BENEFITS	6796	6829	6863	6897	6931	6966	7000	7035	7070	7105
PROJECT COSTS										
ENERGY USED (TONNES OF WOOD)	3602	3602	3602	3602	3602	3602	3602	3602	3602	3602
PRICE ENERGY USED	0.70	0.70	0.70	0.70	0.70	0.70	0.70	0.70	0.70	0.70
VALUE ENERGY USED	2521	2521	2521	2521	2521	2521	2521	2521	2521	2521
ENG/DESIGN COST	0	0	0	0	0	0	0	0	0	0
DIRECT CAP COST	0	0	0	0	0	0	0	0	0	0
INDIRECT DVL COST	0	0	0	0	0	0	0	0	0	0
OPER & MAINT EXPENSE	1353	1353	1353	1353	1353	1353	1353	1353	1353	1353
OTHER OPER PRD CST	0	0	0	0	0	0	0	0	0	0
TOTAL COST	3875	3875	3875	3875	3875	3875	3875	3875	3875	3875
NET BENEFIT STREAM	2921	2955	2989	3023	3057	3091	3126	3161	3196	3231
CUMULATIVE NET BENEFITS	44924	47879	50867	53890	56947	60038	63164	66325	69521	72751

FOREIGN CURRENCY REQUIREMENTS BY TIME PERIOD
BOILER PLANT REHABILITATION #2

All Monetary Values In: Rs(000)
Positive Values Indicate Use Of Foreign Currency
Negative Values Indicate Generation Of Foreign Currency

TIME PERIOD	3q/1984	4q/1984	1q/1985	2q/1985	3q/1985	4q/1985	1q/1986	2q/1986	3q/1986	4q/1986
VALUE ENERGY SAVED	0	0	0	0	0	0	-6104	-6280	-6460	-6646
VALUE ENERGY SOLD	0	0	0	0	0	0	0	0	0	0
ENG/DESIGN COST	288	540	553	755	580	1263	0	0	0	0
DIRECT CAP COST	4751	4398	4142	1953	1138	353	0	0	0	0
INDIRECT DVL COST	0	0	0	0	0	0	0	0	0	0
OPER & MAINT EXPENSE	0	0	0	0	0	0	765	785	805	826
ENERGY CONSUMED	0	0	0	0	0	0	0	0	0	0
OTHER OPER PRD CST	0	0	0	0	0	0	0	0	0	0
INTEREST PAYMENTS	0	107	214	318	381	425	465	465	465	465
NET FOREIGN CURRENCY REQUIRED	5039	5045	4909	3026	2099	2041	-4874	-5030	-5190	-5355
CUMULATIVE FOREIGN CURRENCY REQUIRED	5039	10084	14993	18019	20118	22159	17285	12255	7066	1711

FOREIGN CURRENCY REQUIREMENTS BY TIME PERIOD
BOILER PLANT REHABILITATION #2

All Monetary Values In: Rs(000)
Positive Values Indicate Use Of Foreign Currency
Negative Values Indicate Generation Of Foreign Currency

TIME PERIOD	1q/1987	2q/1987	3q/1987	4q/1987	1q/1988	2q/1988	3q/1988	4q/1988	1q/1989	2q/1989
VALUE ENERGY SAVED	-6837	-7033	-7235	-7443	-7657	-7877	-8104	-8337	-8576	-8823
VALUE ENERGY SOLD	0	0	0	0	0	0	0	0	0	0
ENG/DESIGN COST	0	0	0	0	0	0	0	0	0	0
DIRECT CAP COST	0	0	0	0	0	0	0	0	0	0
INDIRECT DVL COST	0	0	0	0	0	0	0	0	0	0
OPER & MAINT EXPENSE	847	869	892	915	939	963	988	1013	1040	1067
ENERGY CONSUMED	0	0	0	0	0	0	0	0	0	0
OTHER OPER PRD CST	0	0	0	0	0	0	0	0	0	0
INTEREST PAYMENTS	465	457	449	440	431	422	412	402	392	381
NET FOREIGN CURRENCY REQUIRED	-5524	-5707	-5895	-6088	-6288	-6493	-6704	-6921	-7145	-7375
CUMULATIVE FOREIGN CURRENCY REQUIRED	-3813	-9520	-15415	-21503	-27791	-34283	-40987	-47908	-55053	-62427

FOREIGN CURRENCY REQUIREMENTS BY TIME PERIOD
BOILER PLANT REHABILITATION #2

All Monetary Values In: Rs(000)
Positive Values Indicate Use Of Foreign Currency
Negative Values Indicate Generation Of Foreign Currency

TIME PERIOD	3q/1989	4q/1989	1q/1990	2q/1990	3q/1990	4q/1990	1q/1991	2q/1991	3q/1991	4q/1991
VALUE ENERGY SAVED	-9076	-9337	-9605	-9881	-10165	-10457	-10758	-11067	-11385	-11712
VALUE ENERGY SOLD	0	0	0	0	0	0	0	0	0	0
ENG/DESIGN COST	0	0	0	0	0	0	0	0	0	0
DIRECT CAP COST	0	0	0	0	0	0	0	0	0	0
INDIRECT DVL COST	0	0	0	0	0	0	0	0	0	0
OPER & MAINT EXPENSE	1094	1123	1152	1182	1212	1244	1276	1309	1343	1377
ENERGY CONSUMED	0	0	0	0	0	0	0	0	0	0
OTHER OPER PRD CST	0	0	0	0	0	0	0	0	0	0
INTEREST PAYMENTS	370	359	347	335	322	309	295	281	266	251
NET FOREIGN CURRENCY REQUIRED	-7612	-7856	-8107	-8365	-8631	-8905	-9187	-9477	-9776	-10083
CUMULATIVE FOREIGN CURRENCY REQUIRED	-70039	-77895	-86002	-94367	-102998	-111903	-121090	-130568	-140344	-150427

FOREIGN CURRENCY REQUIREMENTS BY TIME PERIOD
BOILER PLANT REHABILITATION #2

All Monetary Values In: Rs(000)
Positive Values Indicate Use Of Foreign Currency
Negative Values Indicate Generation Of Foreign Currency

TIME PERIOD	1q/1992	2q/1992	3q/1992	4q/1992	1q/1993	2q/1993	3q/1993	4q/1993	1q/1994	2q/1994
VALUE ENERGY SAVED	-12049	-12395	-12751	-13118	-13495	-13883	-14282	-14692	-15114	-15549
VALUE ENERGY SOLD	0	0	0	0	0	0	0	0	0	0
ENG/DESIGN COST	0	0	0	0	0	0	0	0	0	0
DIRECT CAP COST	0	0	0	0	0	0	0	0	0	0
INDIRECT DVL COST	0	0	0	0	0	0	0	0	0	0
OPER & MAINT EXPENSE	1413	1450	1487	1526	1565	1606	1647	1690	1734	1779
ENERGY CONSUMED	0	0	0	0	0	0	0	0	0	0
OTHER OPER PRD CST	0	0	0	0	0	0	0	0	0	0
INTEREST PAYMENTS	236	220	203	186	168	149	130	110	90	68
NET FOREIGN CURRENCY REQUIRED	-10400	-10726	-11061	-11406	-11762	-12128	-12504	-12892	-13291	-13701
CUMULATIVE FOREIGN CURRENCY REQUIRED	-160827	-171553	-182614	-194020	-205782	-217910	-230414	-243305	-256596	-270297

CONSERVATION PROJECT FINANCIAL/ECONOMIC EVALUATION

BOILER PLANT REHABIITATION #3

Prepared for:
MR. PALITA SUBASINGHE
SRI LANKA TYRE CORPORATION
KELANIYA, SRI LANKA

Prepared by:
EDMAC
Ministry of Power and Energy
50, Sir Chittampalam A. Gardiner Mawatha
Colombo -02,Sri Lanka

JUNE 22, 1984

ACKNOWLEDGEMENT

This feasibility study was conducted under a joint program of the Sri Lanka Ministry of Power and Energy and the United States Agency for International Development. The analyses for the study were performed using a conservation project financial evaluation model developed by Hagler, Bailly & Company under contract to the Office of Energy, Bureau for Science and Technology, U.S. AID. For information on the model, contact:

Pamela Baldwin, Project Officer
Energy Policy Development and Conservation Project
S&T/EY--USAID
Washington, D.C. USA 20523
(703) 235-8918

or

Hagler, Bailly & Company
2301 M Street NW
Washington, DC USA 20037
(202) 463-7575
Telex: 710-822-1150

TABLE OF CONTENTS

Summary Project Information	Page 1
Summary Results of Financial Analysis	Page 2
Development Period Financial Summary	Page 3
Project Financial Analysis	Page 4
Summary Results Of Sensitivity Analysis	Page 8
Summary Results Of Social Value And Foreign Currency Requirements Analyses	Page 9
Social Value Analysis	Page 10
Foreign Currency Requirements Analysis	Page 14

LIST OF ABBREVIATIONS USED IN THIS REPORT:

CAP: Capital
DVL: Development
ENG: Engineering
IND: Indirect
PRD: Period
REQRD: Required
Q: Quantity
OPER & MAINT: Operating & Maintenance

SUMMARY PROJECT INFORMATION

Project Name: BOILER PLANT REHABILITATION #3

Project Location: KELANIYA, SRI LANKA

Company: SRI LANKA TYRE CORPORATION

Company Contact: MR. PALITA SUBASINGHE, SENIOR POWER ENGINEER

Telephone: 521-241

Project Description:

This study is concerned with replacing an inefficient boiler plant with a cogeneration system consisting of a multi-fuel fired boiler and a back-pressured steam turbine. The boiler would be fired on a mixture of 85% wood/15% oil. Boiler operating efficiency would be improved from 54% to about 75%.

Start of Project Development: 3q/1984

Start of Project Operation: 1q/1986

SUMMARY RESULTS OF FINANCIAL ANALYSIS

BOILER PLANT REHABJITATION #3

All Monetary Values In: Rs(000)

PROJECT SCHEDULE
DEVELOPMENT STARTS: 3q/1984
OPERATIONS START: 1q/1986
LAST TIME PERIOD IN ANALYSIS: 2q/1994

DEVELOPMENT PERIOD COSTS
TOTAL DIRECT CAPITAL COST: 42900
TOTAL DIRECT DVL PERIOD COST (includes interest): 45766
TOTAL INDIRECT DVL PERIOD COST: 0

FINANCIAL STRUCTURE
DEBT FRACTION: 60.0%
TOTAL DEBT REQUIRED: 27460
TOTAL EQUITY CONTRIBUTED: 18307

DEBT TERMS
DEVELOPMENT PRD INTEREST RATE: 14.0%
OPERATING PERIOD INTEREST RATE: 14.0%
OPERATING PERIOD DEBT TERM: 32 QUARTERS
DEBT MORATORIUM PERIOD: 3 QUARTERS

MARGINAL TAX RATE: 50.0%

FINANCIAL PERFORMANCE

TARGET AFTER TAX RETURN ON EQUITY: 20.0%
PRESENT VALUE OF AFTER TAX CASH FLOW
AT 20.0%: 20095
INTERNAL RATE OF RETURN: 53.1%
CUMULATIVE CASH FLOW BECOMES POSITIVE IN 3q/1987.

DEVELOPMENT PERIOD FINANCIAL SUMMARY
BOILER PLANT REHABILITATION #3

All Monetary Values In: Rs(000)

TIME PERIOD	3q/1984	4q/1984	1q/1985	2q/1985	3q/1985	4q/1985
ENG/DESIGN COST	253	859	830	1589	1357	2197
DIRECT CAPITAL COST	10608	6397	8262	7635	2055	858
DVL PRD INTEREST AT 14.0%	0	228	385	584	790	878
TOTAL FINANCING RQRD	10861	7484	9477	9808	4202	3933
EQUITY CONTRIBUTED	4344	2994	3791	3923	1681	1573
DEBT REQUIRED	6517	4490	5686	5885	2521	2360
CUMULATIVE EQUITY	4344	7338	11129	15052	16733	18307
CUMULATIVE DEBT	6517	11007	16693	22578	25100	27460
CUMULATIVE CAPITAL	10861	18345	27822	37631	41833	45766
DVL COST EXPENSED	253	859	830	1589	1357	2197
DVL COST DEPRECIATED	10608	6397	8262	7635	2055	858
INDIRECT DVL COST	0	0	0	0	0	0
CUMULATIVE IND COST	0	0	0	0	0	0

FINANCIAL ANALYSIS BY TIME PERIOD
BOILER PLANT REHABIITATION #3
All Monetary Values In: Rs(000)

TIME PERIOD	3q/1984	4q/1984	1q/1985	2q/1985	3q/1985	4q/1985	1q/1986	2q/1986	3q/1986	4q/1986
PROJECT REVENUES										
ENERGY SAVED (TONNES OF OIL)	0	0	0	0	0	0	1176	1176	1176	1176
PRICE ENERGY SAVED	0.00	0.00	0.00	0.00	0.00	0.00	5.67	5.83	6.00	6.17
VALUE ENERGY SAVED	0	0	0	0	0	0	6669	6861	7058	7261
ENERGY SOLD (MWH ELECTRICITY)	0	0	0	0	0	0	414	414	414	414
PRICE ENERGY SOLD	0.00	0.00	0.00	0.00	0.00	0.00	2.30	2.37	2.43	2.50
VALUE ENERGY SOLD	0	0	0	0	0	0	952	980	1008	1037
TOTAL REVENUE	0	0	0	0	0	0	7621	7840	8066	8298
BEFORE TAX COSTS										
ENERGY USED (TONNES OF WOOD)	0	0	0	0	0	0	4130	4130	4130	4130
PRICE ENERGY USED	0.00	0.00	0.00	0.00	0.00	0.00	0.68	0.69	0.71	0.73
VALUE ENERGY USED	0	0	0	0	0	0	2792	2859	2928	2998
DVL PRD EXPENSE	253	859	830	1589	1357	2197	0	0	0	0
DVL PRD INTEREST	0	228	385	584	790	878	961	0	0	0
INDIRECT DVL COST	0	0	0	0	0	0	0	0	0	0
OPER & MAINT EXPENSE	0	0	0	0	0	0	1328	1362	1398	1434
OTHER OPER PRD COST	0	0	0	0	0	0	0	0	0	0
OPER PRD INTEREST	0	0	0	0	0	0	0	961	961	961
DEPRECIATION	0	0	0	0	0	0	1679	1679	1679	1679
TOTAL COST	253	1087	1215	2173	2147	3075	6759	6861	6965	7072
TAXABLE INCOME	-253	-1087	-1215	-2173	-2147	-3075	862	979	1100	1226
INCOME TAX	-127	-544	-608	-1087	-1074	-1538	431	490	550	613
AFTER TAX OUTLAYS										
DEBT PRINCIPAL	0	0	0	0	0	0	0	0	0	0
EQUITY CONTRIBUTED	4344	2994	3791	3923	1681	1573	0	0	0	0
TOTAL AFTER TAX OUTLAYS	4344	2994	3791	3923	1681	1573	0	0	0	0
AFTER-TAX CASH FLOW	-4218	-2450	-3183	-2837	-607	-36	2110	2168	2229	2292
CUMULATIVE CASH FLOW	-4218	-6668	-9851	-12688	-13295	-13331	-11221	-9053	-6824	-4532

FINANCIAL ANALYSIS BY TIME PERIOD
BOILER PLANT REHABILITATION #3
All Monetary Values In: Rs(000)

TIME PERIOD	1q/1987	2q/1987	3q/1987	4q/1987	1q/1988	2q/1988	3q/1988	4q/1988	1q/1989	2q/1989
PROJECT REVENUES										
ENERGY SAVED (TONNES OF OIL)	1176	1176	1176	1176	1176	1176	1176	1176	1176	1176
PRICE ENERGY SAVED	6.35	6.53	6.72	6.92	7.11	7.32	7.53	7.74	7.97	8.20
VALUE ENERGY SAVED	7470	7684	7905	8132	8366	8606	8854	9108	9370	9639
ENERGY SOLD (MWH ELECTRICITY)	414	414	414	414	414	414	414	414	414	414
PRICE ENERGY SOLD	2.58	2.65	2.73	2.80	2.89	2.97	3.05	3.14	3.23	3.32
VALUE ENERGY SOLD	1066	1097	1129	1161	1194	1229	1264	1300	1338	1376
TOTAL REVENUE	8536	8781	9034	9293	9560	9835	10118	10408	10708	11015
BEFORE TAX COSTS										
ENERGY USED (TONNES OF WOOD)	4130	4130	4130	4130	4130	4130	4130	4130	4130	4130
PRICE ENERGY USED	0.74	0.76	0.78	0.80	0.82	0.84	0.86	0.88	0.90	0.92
VALUE ENERGY USED	3071	3145	3221	3298	3378	3459	3543	3628	3716	3805
DVL PRD EXPENSE	0	0	0	0	0	0	0	0	0	0
DVL PRD INTEREST	0	0	0	0	0	0	0	0	0	0
INDIRECT DVL COST	0	0	0	0	0	0	0	0	0	0
OPER & MAINT EXPENSE	1471	1509	1548	1588	1629	1671	1714	1759	1804	1851
OTHER OPER PRD COST	0	0	0	0	0	0	0	0	0	0
OPER PRD INTEREST	961	944	927	909	890	871	851	831	809	787
DEPRECIATION	1679	1679	1679	1679	1679	1679	1679	1679	1679	1679
TOTAL COST	7181	7277	7374	7474	7576	7680	7787	7896	8008	8122
TAXABLE INCOME	1355	1505	1659	1819	1984	2155	2331	2512	2700	2893
INCOME TAX	677	752	830	910	992	1077	1165	1256	1350	1447
AFTER TAX OUTLAYS										
DEBT PRINCIPAL	479	496	513	531	550	569	589	609	631	653
EQUITY CONTRIBUTED	0	0	0	0	0	0	0	0	0	0
TOTAL AFTER TAX OUTLAYS	479	496	513	531	550	569	589	609	631	653
AFTER-TAX CASH FLOW	1877	1935	1995	2057	2121	2187	2255	2326	2398	2473
CUMULATIVE CASH FLOW	-2655	-719	1276	3334	5455	7642	9898	12224	14622	17094

FINANCIAL ANALYSIS BY TIME PERIOD
BOILER PLANT REHABILITATION #3
All Monetary Values In: Rs(000)

TIME PERIOD	3q/1989	4q/1989	1q/1990	2q/1990	3q/1990	4q/1990	1q/1991	2q/1991	3q/1991	4q/1991
PROJECT REVENUES										
ENERGY SAVED (TONNES OF OIL)	1176	1176	1176	1176	1176	1176	1176	1176	1176	1176
PRICE ENERGY SAVED	8.43	8.67	8.92	9.18	9.44	9.72	9.99	10.28	10.58	10.88
VALUE ENERGY SAVED	9916	10201	10494	10796	11106	11425	11753	12091	12439	12796
ENERGY SOLD (MWH ELECTRICITY)	414	414	414	414	414	414	414	414	414	414
PRICE ENERGY SOLD	3.42	3.52	3.62	3.72	3.83	3.94	4.05	4.17	4.29	4.41
VALUE ENERGY SOLD	1416	1456	1498	1541	1586	1631	1678	1726	1776	1827
TOTAL REVENUE	11332	11657	11992	12337	12692	13056	13432	13818	14215	14623
BEFORE TAX COSTS										
ENERGY USED (TONNES OF WOOD)	4130	4130	4130	4130	4130	4130	4130	4130	4130	4130
PRICE ENERGY USED	0.94	0.97	0.99	1.01	1.04	1.06	1.09	1.11	1.14	1.17
VALUE ENERGY USED	3897	3991	4087	4186	4287	4390	4496	4604	4715	4829
DVL PRD EXPENSE	0	0	0	0	0	0	0	0	0	0
DVL PRD INTEREST	0	0	0	0	0	0	0	0	0	0
INDIRECT DVL COST	0	0	0	0	0	0	0	0	0	0
OPER & MAINT EXPENSE	1898	1948	1998	2050	2103	2157	2213	2270	2329	2389
OTHER OPER PRD COST	0	0	0	0	0	0	0	0	0	0
OPER PRD INTEREST	764	741	716	691	665	638	610	580	550	519
DEPRECIATION	1679	1679	560	560	560	560	560	560	560	560
TOTAL COST	8239	8358	7361	7486	7614	7744	7878	8014	8154	8297
TAXABLE INCOME	3093	3299	4632	4851	5078	5312	5554	5803	6061	6326
INCOME TAX	1547	1650	2316	2426	2539	2656	2777	2902	3030	3163
AFTER TAX OUTLAYS										
DEBT PRINCIPAL	676	699	724	749	775	802	830	860	890	921
EQUITY CONTRIBUTED	0	0	0	0	0	0	0	0	0	0
TOTAL AFTER TAX OUTLAYS	676	699	724	749	775	802	830	860	890	921
AFTER-TAX CASH FLOW	2550	2629	2152	2236	2323	2413	2506	2602	2700	2802
CUMULATIVE CASH FLOW	19644	22274	24425	26661	28985	31398	33904	36506	39206	42008

FINANCIAL ANALYSIS BY TIME PERIOD
BOILER PLANT REHABILITATION #3
All Monetary Values In: Rs(000)

TIME PERIOD	1q/1992	2q/1992	3q/1992	4q/1992	1q/1993	2q/1993	3q/1993	4q/1993	1q/1994	2q/1994
PROJECT REVENUES										
ENERGY SAVED (TONNES OF OIL)	1176	1176	1176	1176	1176	1176	1176	1176	1176	1176
PRICE ENERGY SAVED	11.19	11.52	11.85	12.19	12.54	12.90	13.27	13.65	14.04	14.44
VALUE ENERGY SAVED	13164	13542	13931	14332	14744	15167	15603	16051	16513	16987
ENERGY SOLD (MWH ELECTRICITY)	414	414	414	414	414	414	414	414	414	414
PRICE ENERGY SOLD	4.54	4.67	4.80	4.94	5.08	5.23	5.38	5.54	5.69	5.86
VALUE ENERGY SOLD	1879	1933	1989	2046	2105	2166	2228	2292	2358	2425
TOTAL REVENUE	15043	15476	15920	16378	16849	17333	17831	18343	18870	19413
BEFORE TAX COSTS										
ENERGY USED (TONNES OF WOOD)	4130	4130	4130	4130	4130	4130	4130	4130	4130	4130
PRICE ENERGY USED	1.20	1.23	1.26	1.29	1.32	1.35	1.38	1.41	1.45	1.48
VALUE ENERGY USED	4945	5065	5187	5312	5440	5571	5705	5843	5984	6128
DVL PRD EXPENSE	0	0	0	0	0	0	0	0	0	0
DVL PRD INTEREST	0	0	0	0	0	0	0	0	0	0
INDIRECT DVL COST	0	0	0	0	0	0	0	0	0	0
OPER & MAINT EXPENSE	2451	2514	2579	2646	2714	2784	2856	2930	3006	3083
OTHER OPER PRD COST	0	0	0	0	0	0	0	0	0	0
OPER PRD INTEREST	487	454	419	383	346	308	269	228	185	141
DEPRECIATION	560	560	560	560	560	560	560	560	0	0
TOTAL COST	8443	8592	8744	8900	9060	9223	9390	9560	9175	9353
TAXABLE INCOME	6601	6884	7176	7477	7789	8110	8441	8783	9696	10060
INCOME TAX	3300	3442	3588	3739	3894	4055	4221	4392	4848	5030
AFTER TAX OUTLAYS										
DEBT PRINCIPAL	953	986	1021	1057	1094	1132	1171	1212	1255	1299
EQUITY CONTRIBUTED	0	0	0	0	0	0	0	0	0	0
TOTAL AFTER TAX OUTLAYS	953	986	1021	1057	1094	1132	1171	1212	1255	1299
AFTER-TAX CASH FLOW	2907	3015	3127	3242	3360	3483	3609	3739	3593	3731
CUMULATIVE CASH FLOW	44915	47930	51057	54299	57659	61142	64750	68489	72082	75813

SUMMARY RESULTS OF SENSITIVITY ANALYSIS
BOILER PLANT REHABILITATION #3

BASE OR EXPECTED CASE

PRESENT VALUE OF AFTER TAX CASH FLOW
AT 20.0%: 20095
INTERNAL RATE OF RETURN: 53.1%
CUMULATIVE CASH FLOW BECOMES POSITIVE IN 3q/1987.

ENERGY SAVINGS/SALES 10% GREATER THAN EXPECTED

PRESENT VALUE OF AFTER TAX CASH FLOW
AT 20.0%: 27617
INTERNAL RATE OF RETURN: 62.5%
CUMULATIVE CASH FLOW BECOMES POSITIVE IN 2q/1987.

ENERGY SAVINGS/SALES 10% LESS THAN EXPECTED

PRESENT VALUE OF AFTER TAX CASH FLOW
AT 20.0%: 12574
INTERNAL RATE OF RETURN: 42.6%
CUMULATIVE CASH FLOW BECOMES POSITIVE IN 1q/1988.

DIRECT DEVELOPMENT COSTS 10% GREATER THAN EXPECTED

PRESENT VALUE OF AFTER TAX CASH FLOW
AT 20.0%: 18420
INTERNAL RATE OF RETURN: 48.6%
CUMULATIVE CASH FLOW BECOMES POSITIVE IN 3q/1987.

DIRECT DEVELOPMENT COSTS 10% LESS THAN EXPECTED

PRESENT VALUE OF AFTER TAX CASH FLOW
AT 20.0%: 21771
INTERNAL RATE OF RETURN: 58.2%
CUMULATIVE CASH FLOW BECOMES POSITIVE IN 2q/1987.

INTEREST RATES 2 POINTS HIGHER THAN EXPECTED

PRESENT VALUE OF AFTER TAX CASH FLOW
AT 20.0%: 19388
INTERNAL RATE OF RETURN: 52.1%
CUMULATIVE CASH FLOW BECOMES POSITIVE IN 3q/1987.

INTEREST RATES 2 POINTS LESS THAN EXPECTED

PRESENT VALUE OF AFTER TAX CASH FLOW
AT 20.0%: 20773
INTERNAL RATE OF RETURN: 54%
CUMULATIVE CASH FLOW BECOMES POSITIVE IN 3q/1987.

SUMMARY RESULTS OF SOCIAL VALUE AND
FOREIGN CURRENCY REQUIREMENTS ANALYSIS

BOILER PLANT REHABIITATION #3

All Monetary Values In: Rs(000)

PROJECT SCHEDULE
DEVELOPMENT STARTS: 3q/1984
OPERATIONS START: 1q/1986
LAST TIME PERIOD IN ANALYSIS: 2q/1994

SOCIAL DISCOUNT RATE: 10.0%

SOCIAL VALUE RESULTS

TOTAL DEVELOPMENT PERIOD COST: 38442

TOTAL NET BENEFITS IN OPERATING PERIOD: 76246

PRESENT VALUE OF NET BENEFIT STREAM AT
10.0%: 9565

FOREIGN CURRENCY REQUIREMENTS RESULTS

FOREIGN CURRENCY REQUIRED IN DEVELOPMENT PERIOD: 34549

FOREIGN CURRENCY REQUIRED IN OPERATING PERIOD: -311464

PRESENT VALUE OF FOREIGN CURRENCY REQUIREMENT AT
10.0%: -140899

(Positive values mean the project is a net user of foreign currency; Negative values mean the project is a net generator of foreign currency.)

SOCIAL VALUE ANALYSIS BY TIME PERIOD
BOILER PLANT REHABIITATION #3

All Monetary Values In: Rs(000)
Taxes And Interest Not Considered In This Analysis

TIME PERIOD	3q/1984	4q/1984	1q/1985	2q/1985	3q/1985	4q/1985	1q/1986	2q/1986	3q/1986	4q/1986
PROJECT BENEFITS										
ENERGY SAVED (TONNES OF OIL)	0	0	0	0	0	0	1176	1176	1176	1176
PRICE ENERGY SAVED	0.00	0.00	0.00	0.00	0.00	0.00	3.69	3.71	3.73	3.75
VALUE ENERGY SAVED	0	0	0	0	0	0	4342	4363	4385	4407
ENERGY SOLD (MWH ELECTRICITY)	0	0	0	0	0	0	414	414	414	414
PRICE ENERGY SOLD	0.00	0.00	0.00	0.00	0.00	0.00	3.50	3.50	3.50	3.50
VALUE ENERGY SOLD	0	0	0	0	0	0	1449	1449	1449	1449
TOTAL BENEFITS	0	0	0	0	0	0	5791	5812	5834	5856
PROJECT COSTS										
ENERGY USED (TONNES OF WOOD)	0	0	0	0	0	0	4130	4130	4130	4130
PRICE ENERGY USED	0.00	0.00	0.00	0.00	0.00	0.00	0.50	0.50	0.50	0.50
VALUE ENERGY USED	0	0	0	0	0	0	2065	2065	2065	2065
ENG/DESIGN COST	247	837	788	1476	1231	1865	0	0	0	0
DIRECT CAP COST	9686	5840	7364	6648	1747	713	0	0	0	0
INDIRECT DVL COST	0	0	0	0	0	0	0	0	0	0
OPER & MAINT EXPENSE	0	0	0	0	0	0	1518	1518	1518	1518
OTHER OPER PRD CST	0	0	0	0	0	0	0	0	0	0
TOTAL COST	9933	6677	8152	8124	2978	2578	3583	3583	3583	3583
NET BENEFIT STREAM	-9933	-6677	-8152	-8124	-2978	-2578	2208	2229	2251	2273
CUMULATIVE NET BENEFITS	-9933	-16610	-24762	-32886	-35864	-38442	-36234	-34005	-31755	-29482

SOCIAL VALUE ANALYSIS BY TIME PERIOD
BOILER PLANT REHABIITATION #3

All Monetary Values In: Rs(000)
Taxes And Interest Not Considered In This Analysis

TIME PERIOD	1q/1987	2q/1987	3q/1987	4q/1987	1q/1988	2q/1988	3q/1988	4q/1988	1q/1989	2q/1989
PROJECT BENEFITS										
ENERGY SAVED (TONNES OF OIL)	1176	1176	1176	1176	1176	1176	1176	1176	1176	1176
PRICE ENERGY SAVED	3.77	3.78	3.80	3.82	3.84	3.86	3.88	3.90	3.92	3.94
VALUE ENERGY SAVED	4428	4450	4472	4495	4517	4539	4562	4[illegible]5	4607	4630
ENERGY SOLD (MWH ELECTRICITY)	414	414	414	414	414	414	414	414	414	414
PRICE ENERGY SOLD	3.50	3.50	3.50	3.50	3.50	3.50	3.50	3.50	3.50	3.50
VALUE ENERGY SOLD	1449	1449	1449	1449	1449	1449	1449	1449	1449	1449
TOTAL BENEFITS	5877	5899	5921	5944	5966	5988	6011	6034	6056	6079
PROJECT COSTS										
ENERGY USED (TONNES OF WOOD)	4130	4130	4130	4130	4130	4130	4130	4130	4130	4130
PRICE ENERGY USED	0.50	0.50	0.50	0.50	0.50	0.50	0.50	0.50	0.50	0.50
VALUE ENERGY USED	2065	2065	2065	2065	2065	2065	2065	2065	2065	2065
ENG/DESIGN COST	0	0	0	0	0	0	0	0	0	0
DIRECT CAP COST	0	0	0	0	0	0	0	0	0	0
INDIRECT DVL COST	0	0	0	0	0	0	0	0	0	0
OPER & MAINT EXPENSE	1518	1518	1518	1518	1518	1518	1518	1518	1518	1518
OTHER OPER PRD CST	0	0	0	0	0	0	0	0	0	0
TOTAL COST	3583	3583	3583	3583	3583	3583	3583	3583	3583	3583
NET BENEFIT STREAM	2294	2316	2338	2361	2383	2405	2428	2451	2473	2496
CUMULATIVE NET BENEFITS	-27188	-24871	-22533	-20172	-17789	-15384	-12956	-10505	-8032	-5536

SOCIAL VALUE ANALYSIS BY TIME PERIOD
BOILER PLANT REHABILITATION #3

All Monetary Values In: Rs(000)
Taxes And Interest Not Considered In This Analysis

TIME PERIOD	3q/1989	4q/1989	1q/1990	2q/1990	3q/1990	4q/1990	1q/1991	2q/1991	3q/1991	4q/1991
PROJECT BENEFITS										
ENERGY SAVED (TONNES OF OIL)	1176	1176	1176	1176	1176	1176	1176	1176	1176	1176
PRICE ENERGY SAVED	3.96	3.98	4.00	4.02	4.04	4.06	4.08	4.10	4.12	4.14
VALUE ENERGY SAVED	4653	4676	4699	4723	4746	4770	4793	4817	4841	4865
ENERGY SOLD (MWH ELECTRICITY)	414	414	414	414	414	414	414	414	414	414
PRICE ENERGY SOLD	3.50	3.50	3.50	3.50	3.50	3.50	3.50	3.50	3.50	3.50
VALUE ENERGY SOLD	1449	1449	1449	1449	1449	1449	1449	1449	1449	1449
TOTAL BENEFITS	6102	6125	6148	6172	6195	6219	6242	6266	6290	6314
PROJECT COSTS										
ENERGY USED (TONNES OF WOOD)	4130	4130	4130	4130	4130	4130	4130	4130	4130	4130
PRICE ENERGY USED	0.50	0.50	0.50	0.50	0.50	0.50	0.70	0.70	0.70	0.70
VALUE ENERGY USED	2065	2065	2065	2065	2065	2065	2891	2891	2891	2891
ENG/DESIGN COST	0	0	0	0	0	0	0	0	0	0
DIRECT CAP COST	0	0	0	0	0	0	0	0	0	0
INDIRECT DVL COST	0	0	0	0	0	0	0	0	0	0
OPER & MAINT EXPENSE	1518	1518	1518	1518	1518	1518	1518	1518	1518	1518
OTHER OPER PRD CST	0	0	0	0	0	0	0	0	0	0
TOTAL COST	3583	3583	3583	3583	3583	3583	4409	4409	4409	4409
NET BENEFIT STREAM	2519	2542	2565	2589	2612	2636	1833	1857	1881	1905
CUMULATIVE NET BENEFITS	-3017	-475	2091	4680	7292	9927	11761	13618	15499	17404

SOCIAL VALUE ANALYSIS BY TIME PERIOD
BOILER PLANT REHABILITATION #3

All Monetary Values In: Rs(000)
Taxes And Interest Not Considered In This Analysis

TIME PERIOD	1q/1992	2q/1992	3q/1992	4q/1992	1q/1993	2q/1993	3q/1993	4q/1993	1q/1994	2q/1994
PROJECT BENEFITS										
ENERGY SAVED (TONNES OF OIL)	1176	1176	1176	1176	1176	1176	1176	1176	1176	1176
PRICE ENERGY SAVED	4.16	4.18	4.20	4.22	4.24	4.26	4.28	4.30	4.33	4.35
VALUE ENERGY SAVED	4889	4914	4938	4962	4987	5012	5037	5062	5087	5112
ENERGY SOLD (MWH ELECTRICITY)	414	414	414	414	414	414	414	414	414	414
PRICE ENERGY SOLD	3.50	3.50	3.50	3.50	3.50	3.50	3.50	3.50	3.50	3.50
VALUE ENERGY SOLD	1449	1449	1449	1449	1449	1449	1449	1449	1449	1449
TOTAL BENEFITS	6338	6363	6387	6411	6436	6461	6486	6511	6536	6561
PROJECT COSTS										
ENERGY USED (TONNES OF WOOD)	4130	4130	4130	4130	4130	4130	4130	4130	4130	4130
PRICE ENERGY USED	0.70	0.70	0.70	0.70	0.70	0.70	0.70	0.70	0.70	0.70
VALUE ENERGY USED	2891	2891	2891	2891	2891	2891	2891	2891	2891	2891
ENG/DESIGN COST	0	0	0	0	0	0	0	0	0	0
DIRECT CAP COST	0	0	0	0	0	0	0	0	0	0
INDIRECT DVL COST	0	0	0	0	0	0	0	0	0	0
OPER & MAINT EXPENSE	1518	1518	1518	1518	1518	1518	1518	1518	1518	1518
OTHER OPER PRD COST	0	0	0	0	0	0	0	0	0	0
TOTAL COST	4409	4409	4409	4409	4409	4409	4409	4409	4409	4409
NET BENEFIT STREAM	1929	1954	1978	2002	2027	2052	2077	2102	2127	2152
CUMULATIVE NET BENEFITS	19334	21287	23265	25268	27295	29347	31423	33525	35652	37804

FOREIGN CURRENCY REQUIREMENTS BY TIME PERIOD
BOILER PLANT REHABILITATION #3

All Monetary Values In: Rs(000)
Positive Values Indicate Use Of Foreign Currency
Negative Values Indicate Generation Of Foreign Currency

TIME PERIOD	3q/1984	4q/1984	1q/1985	2q/1985	3q/1985	4q/1985	1q/1986	2q/1986	3q/1986	4q/1986
VALUE ENERGY SAVED	0	0	0	0	0	0	-6002	-6175	-6352	-6535
VALUE ENERGY SOLD	0	0	0	0	0	0	-667	-686	-705	-726
ENG/DESIGN COST	189	643	622	1190	1016	1645	0	0	0	0
DIRECT CAP COST	8021	4837	6247	5773	1554	649	0	0	0	0
INDIRECT DVL COST	0	0	0	0	0	0	0	0	0	0
OPER & MAINT EXPENSE	0	0	0	0	0	0	892	915	939	963
ENERGY CONSUMED	0	0	0	0	0	0	0	0	0	0
OTHER OPER PRD CST	0	0	0	0	0	0	0	0	0	0
INTEREST PAYMENTS	0	172	291	441	597	663	726	726	726	726
NET FOREIGN CURRENCY REQUIRED	8210	5652	7159	7404	3167	2957	-5051	-5219	-5393	-5571
CUMULATIVE FOREIGN CURRENCY REQUIRED	8210	13862	21022	28425	31592	34549	29498	24279	18886	13314

FOREIGN CURRENCY REQUIREMENTS BY TIME PERIOD
BOILER PLANT REHABIITATION #3

All Monetary Values In: Rs(000)
Positive Values Indicate Use Of Foreign Currency
Negative Values Indicate Generation Of Foreign Currency

TIME PERIOD	1q/1987	2q/198/	3q/1987	4q/1987	1q/1988	2q/1988	3q/1988	4q/1988	1q/1989	2q/1989
VALUE ENERGY SAVED	-6723	-6916	-7114	-7319	-7529	-7746	-7968	-8197	-8433	-8675
VALUE ENERGY SOLD	-747	-768	-790	-813	-836	-860	-885	-910	-936	-963
ENG/DESIGN COST	0	0	0	0	0	0	0	0	0	0
DIRECT CAP COST	0	0	0	0	0	0	0	0	0	0
INDIRECT DVL COST	0	0	0	0	0	0	0	0	0	0
OPER & MAINT EXPENSE	988	1014	1040	1067	1095	1123	1152	1182	1212	1244
ENERGY CONSUMED	0	0	0	0	0	0	0	0	0	0
OTHER OPER PRD CST	0	0	0	0	0	0	0	0	0	0
INTEREST PAYMENTS	726	713	700	686	672	658	643	627	611	594
NET FOREIGN CURRENCY REQUIRED	-5755	-5957	-6165	-6378	-6599	-6825	-7059	-7299	-7546	-7801
CUMULATIVE FOREIGN CURRENCY REQUIRED	7559	1602	-4563	-10941	-17540	-24365	-31423	-38722	-46268	-54069

FOREIGN CURRENCY REQUIREMENTS BY TIME PERIOD
BOILER PLANT REHABILITATION #3

All Monetary Values In: Rs(000)
Positive Values Indicate Use Of Foreign Currency
Negative Values Indicate Generation Of Foreign Currency

TIME PERIOD	3q/1989	4q/1989	1q/1990	2q/1990	3q/1990	4q/1990	1q/1991	2q/1991	3q/1991	4q/1991
VALUE ENERGY SAVED	-8924	-9181	-9445	-9716	-9995	-10283	-10578	-10882	-11195	-11517
VALUE ENERGY SOLD	-991	-1020	-1049	-1079	-1110	-1142	-1175	-1208	-1243	-1279
ENG/DESIGN COST	0	0	0	0	0	0	0	0	0	0
DIRECT CAP COST	0	0	0	0	0	0	0	0	0	0
INDIRECT DVL COST	0	0	0	0	0	0	0	0	0	0
OPER & MAINT EXPENSE	1276	1309	1343	1377	1413	1449	1487	1525	1565	1605
ENERGY CONSUMED	0	0	0	0	0	0	0	0	0	0
OTHER OPER PRD CST	0	0	0	0	0	0	0	0	0	0
INTEREST PAYMENTS	577	559	541	522	502	481	460	438	416	392
NET FOREIGN CURRENCY REQUIRED	-8063	-8332	-8610	-8896	-9191	-9494	-9806	-10127	-10458	-10798
CUMULATIVE FOREIGN CURRENCY REQUIRED	-62131	-70464	-79074	-87970	-97160	-106654	-116460	-126587	-137044	-147843

FOREIGN CURRENCY REQUIREMENTS BY TIME PERIOD
BOILER PLANT REHABIITATION #3

All Monetary Values In: Rs(000)
Positive Values Indicate Use Of Foreign Currency
Negative Values Indicate Generation Of Foreign Currency

TIME PERIOD	1q/1992	2q/1992	3q/1992	4q/1992	1q/1993	2q/1993	3q/1993	4q/1993	1q/1994	2q/1994
VALUE ENERGY SAVED	-11847	-12188	-12538	-12898	-13269	-13650	-14043	-14446	-14861	-15289
VALUE ENERGY SOLD	-1316	-1353	-1392	-1432	-1474	-1516	-1559	-1604	-1650	-1698
ENG/DESIGN COST	0	0	0	0	0	0	0	0	0	0
DIRECT CAP COST	0	0	0	0	0	0	0	0	0	0
INDIRECT DVL COST	0	0	0	0	0	0	0	0	0	0
OPER & MAINT EXPENSE	1647	1689	1733	1778	1824	1871	1919	1969	2020	2072
ENERGY CONSUMED	0	0	0	0	0	0	0	0	0	0
OTHER OPER PRD CST	0	0	0	0	0	0	0	0	0	0
INTEREST PAYMENTS	368	342	316	289	262	233	203	172	140	107
NET FOREIGN CURRENCY REQUIRED	-11149	-11510	-11881	-12264	-12657	-13063	-13480	-13910	-14352	-14808
CUMULATIVE FOREIGN CURRENCY REQUIRED	-158991	-170501	-182382	-194645	-207303	-220365	-233845	-247755	-262107	-276915

CONSERVATION PROJECT FINANCIAL/ECONOMIC EVALUATION

BOILER PLANT REHABILITATION #4

Prepared for:
MR. PALITA SUBASINGHE
SRI LANKA TYRE CORPORATION
KELANIYA, SRI LANKA

Prepared by:
EDMAC
Ministry of Power and Energy
50, Sir Chittampalam A. Gardiner Mawatha
Colombo -02,Sri Lanka

JUNE 22, 1984

ACKNOWLEDGEMENT

This feasibility study was conducted under a joint program of the Sri Lanka Ministry of Power and Energy and the United States Agency for International Development. The analyses for the study were performed using a conservation project financial evaluation model developed by Hagler, Bailly & Company under contract to the Office of Energy, Bureau for Science and Technology, U.S. AID. For information on the model, contact:

Pamela Baldwin, Project Officer
Energy Policy Development and Conservation Project
S&T/EY--USAID
Washington, D.C. USA 20523
(703) 235-8918

or

Hagler, Bailly & Company
2301 M Street NW
Washington, DC USA 20037
(202) 463-7575
Telex: 710-822-1150

TABLE OF CONTENTS

Summary Project Information	Page 1
Summary Results of Financial Analysis	Page 2
Development Period Financial Summary	Page 3
Project Financial Analysis	Page 4
Summary Results Of Sensitivity Analysis	Page 8
Summary Results Of Social Value And Foreign Currency Requirements Analyses	Page 9
Social Value Analysis	Page 10
Foreign Currency Requirements Analysis	Page 14

LIST OF ABBREVIATIONS USED IN THIS REPORT:

CAP: Capital
DVL: Development
ENG: Engineering
IND: Indirect
PRD: Period
RQRD: Required
Q: Quantity
OPER & MAINT: Operating & Maintenance

SUMMARY PROJECT INFORMATION

Project Name: BOILER PLANT REHABILITATION #4

Project Location: KELANIYA, SRI LANKA

Company: SRI LANKA TYRE CORPORATION

Company Contact: MR. PALITA SUBASINGHE, SENIOR POWER ENGINEER

Telephone: 521-241

Project Description:

This study is concerned with replacing an inefficient oil-fired boiler plant with a modern, packaged multi-fuel fired boiler and an extraction condensing turbine for generating electricity. The boiler system would be fired on a mixture of 85% wood and 15% oil. Boiler efficiency would increase from 54% to about 72%.

Start of Project Development: 3q/1984

Start of Project Operation: 1q/1986

SUMMARY RESULTS OF FINANCIAL ANALYSIS

BOILER PLANT REHABILITATION #4

All Monetary Values In: Rs(000)

PROJECT SCHEDULE
DEVELOPMENT STARTS: 3q/1984
OPERATIONS START: 1q/1986
LAST TIME PERIOD IN ANALYSIS: 2q/1994

DEVELOPMENT PERIOD COSTS
TOTAL DIRECT CAPITAL COST: 63922
TOTAL DIRECT DVL PERIOD COST (includes interest): 68796
TOTAL INDIRECT DVL PERIOD COST: 0

FINANCIAL STRUCTURE
DEBT FRACTION: 60.0%
TOTAL DEBT REQUIRED: 41278
TOTAL EQUITY CONTRIBUTED: 27518

DEBT TERMS
DEVELOPMENT PRD INTEREST RATE: 14.0%
OPERATING PERIOD INTEREST RATE: 14.0%
OPERATING PERIOD DEBT TERM: 32 QUARTERS
DEBT MORATORIUM PERIOD: 3 QUARTERS

MARGINAL TAX RATE: 50.0%

FINANCIAL PERFORMANCE

TARGET AFTER TAX RETURN ON EQUITY: 20.0%
PRESENT VALUE OF AFTER TAX CASH FLOW
AT 20.0%: 12655
INTERNAL RATE OF RETURN: 35.3%
CUMULATIVE CASH FLOW BECOMES POSITIVE IN 2q/1988.

107

DEVELOPMENT PERIOD FINANCIAL SUMMARY
BOILER PLANT REHABILITATION #4

All Monetary Values In: Rs(000)

TIME PERIOD	3q/1984	4q/1984	1q/1985	2q/1985	3q/1985	4q/1985
ENG/DESIGN COST	722	1080	3318	1416	1021	1902
DIRECT CAPITAL COST	22380	8193	14132	6138	3620	0
DVL PRD INTEREST AT 14.0%	0	485	690	1071	1252	1376
TOTAL FINANCING RQRD	23102	9758	18140	8625	5893	3278
EQUITY CONTRIBUTED	9241	3903	7256	3450	2357	1311
DEBT REQUIRED	13861	5855	10884	5175	3536	1967
CUMULATIVE EQUITY	9241	13144	20400	23850	26207	27518
CUMULATIVE DEBT	13861	19716	30600	35775	39311	41278
CUMULATIVE CAPITAL	23102	32860	51000	59625	65518	68796
DVL COST EXPENSED	722	1080	3318	1416	1021	1902
DVL COST DEPRECIATED	22380	8193	14132	6138	3620	0
INDIRECT DVL COST	0	0	0	0	0	0
CUMULATIVE IND COST	0	0	0	0	0	0

FINANCIAL ANALYSIS BY TIME PERIOD
BOILER PLANT REHABILITATION #4
All Monetary Values In: Rs(000)

TIME PERIOD	3q/1984	4q/1984	1q/1985	2q/1985	3q/1985	4q/1985	1q/1986	2q/1986	3q/1986	4q/1986
PROJECT REVENUES										
ENERGY SAVED (TONNES OF OIL)	0	0	0	0	0	0	1074	1074	1074	1074
PRICE ENERGY SAVED	0.00	0.00	0.00	0.00	0.00	0.00	5.67	5.83	6.00	6.17
VALUE ENERGY SAVED	0	0	0	0	0	0	6091	6266	6446	6631
ENERGY SOLD (MWH ELECTRICITY)	0	0	0	0	0	0	1620	1620	1620	1620
PRICE ENERGY SOLD	0.00	0.00	0.00	0.00	0.00	0.00	2.30	2.37	2.43	2.50
VALUE ENERGY SOLD	0	0	0	0	0	0	3726	3833	3943	4057
TOTAL REVENUE	0	0	0	0	0	0	9817	10099	10389	10688
BEFORE TAX COSTS										
ENERGY USED (TONNES OF WOOD)	0	0	0	0	0	0	6863	6863	6863	6863
PRICE ENERGY USED	0.00	0.00	0.00	0.00	0.00	0.00	0.68	0.69	0.71	0.73
VALUE ENERGY USED	0	0	0	0	0	0	4639	4751	4865	4983
DVL PRD EXPENSE	722	1080	3318	1416	1021	1902	0	0	0	0
DVL PRD INTEREST	0	485	690	1071	1252	1376	1445	0	0	0
INDIRECT DVL COST	0	0	0	0	0	0	0	0	0	0
OPER & MAINT EXPENSE	0	0	0	0	0	0	1663	1706	1750	1795
OTHER OPER PRD COST	0	0	0	0	0	0	0	0	0	0
OPER PRD INTEREST	0	0	0	0	0	0	0	1445	1445	1445
DEPRECIATION	0	0	0	0	0	0	2553	2553	2553	2553
TOTAL COST	722	1565	4008	2437	2273	3278	10300	10454	10613	10776
TAXABLE INCOME	-722	-1565	-4008	-2487	-2273	-3278	-483	-355	-224	-88
INCOME TAX	-361	-783	-2004	-1244	-1137	-1639	-241	-178	-112	-44
AFTER TAX OUTLAYS										
DEBT PRINCIPAL	0	0	0	0	0	0	0	0	0	0
EQUITY CONTRIBUTED	9241	3903	7256	3450	2357	1311	0	0	0	0
TOTAL AFTER TAX OUTLAYS	9241	3903	7256	3450	2357	1311	0	0	0	0
AFTER-TAX CASH FLOW	-8880	-3121	-5252	-2206	-1221	328	2312	2375	2441	2509
CUMULATIVE CASH FLOW	-8880	-12000	-17252	-19459	-20680	-20352	-18040	-15665	-13224	-10715

FINANCIAL ANALYSIS BY TIME PERIOD
BOILER PLANT REHABILITATION #4
All Monetary Values In: Rs(000)

TIME PERIOD	1q/1987	2q/1987	3q/1987	4q/1987	1q/1988	2q/1988	3q/1988	4q/1988	1q/1989	2q/1989
PROJECT REVENUES										
ENERGY SAVED (TONNES OF OIL)	1074	1074	1074	1074	1074	1074	1074	1074	1074	1074
PRICE ENERGY SAVED	6.35	6.53	6.72	6.92	7.11	7.32	7.53	7.74	7.97	8.20
VALUE ENERGY SAVED	6822	7018	7219	7427	7640	7860	8086	8318	8557	8803
ENERGY SOLD (MWH ELECTRICITY)	1620	1620	1620	1620	1620	1620	1620	1620	1620	1620
PRICE ENERGY SOLD	2.58	2.65	2.73	2.80	2.89	2.97	3.05	3.14	3.23	3.32
VALUE ENERGY SOLD	4173	4293	4416	4543	4674	4808	4946	5089	5235	5385
TOTAL REVENUE	10995	11311	11636	11970	12314	12668	13032	13407	13792	14188
BEFORE TAX COSTS										
ENERGY USED (TONNES OF WOOD)	6863	6863	6863	6863	6863	6863	6863	6863	6863	6863
PRICE ENERGY USED	0.74	0.76	0.78	0.80	0.82	0.84	0.86	0.88	0.90	0.92
VALUE ENERGY USED	5103	5226	5352	5481	5613	5748	5887	6029	6174	6323
DVL PRD EXPENSE	0	0	0	0	0	0	0	0	0	0
DVL PRD INTEREST	0	0	0	0	0	0	0	0	0	0
INDIRECT DVL COST	0	0	0	0	0	0	0	0	0	0
OPER & MAINT EXPENSE	1842	1889	1938	1988	2040	2093	2147	2202	2259	2317
OTHER OPER PRD COST	0	0	0	0	0	0	0	0	0	0
OPER PRD INTEREST	1445	1420	1393	1366	1339	1310	1280	1249	1217	1183
DEPRECIATION	2553	2553	2553	2553	2553	2553	2553	2553	2553	2553
TOTAL COST	10942	11088	11236	11389	11544	11703	11866	12033	12203	12377
TAXABLE INCOME	53	223	399	582	770	965	1166	1374	1589	1811
INCOME TAX	26	112	200	291	385	482	583	687	794	906
AFTER TAX OUTLAYS										
DEBT PRINCIPAL	720	745	771	798	826	855	885	916	948	981
EQUITY CONTRIBUTED	0	0	0	0	0	0	0	0	0	0
TOTAL AFTER TAX OUTLAYS	720	745	771	790	826	855	885	916	948	981
AFTER-TAX CASH FLOW	1859	1919	1981	2046	2112	2180	2251	2324	2399	2477
CUMULATIVE CASH FLOW	-8856	-6936	-4955	-2910	-798	1382	3633	5957	8357	10834

FINANCIAL ANALYSIS BY TIME PERIOD
BOILER PLANT REHABILITATION #4
All Monetary Values In: Rs(000)

TIME PERIOD	3q/1989	4q/1989	1q/1990	2q/1990	3q/1990	4q/1990	1q/1991	2q/1991	3q/1991	4q/1991
PROJECT REVENUES										
ENERGY SAVED (TONNES OF OIL)	1074	1074	1074	1074	1074	1074	1074	1074	1074	1074
PRICE ENERGY SAVED	8.43	8.67	8.92	9.18	9.44	9.72	9.99	10.28	10.58	10.88
VALUE ENERGY SAVED	9056	9316	9584	9859	10143	10434	10734	11042	11360	11686
ENERGY SOLD (MWH ELECTRICITY)	1620	1620	1620	1620	1620	1620	1620	1620	1620	1620
PRICE ENERGY SOLD	3.42	3.52	3.62	3.72	3.83	3.94	4.05	4.17	4.29	4.41
VALUE ENERGY SOLD	5540	5699	5863	6031	6205	6383	6566	6755	6949	7149
TOTAL REVENUE	14596	15015	15447	15891	16347	16817	17300	17798	18309	18835
BEFORE TAX COSTS										
ENERGY USED (TONNES OF WOOD)	6863	6863	6863	6863	6863	6863	6863	6863	6863	6863
PRICE ENERGY USED	0.94	0.97	0.99	1.01	1.04	1.06	1.09	1.11	1.14	1.17
VALUE ENERGY USED	6476	6632	6792	6955	7123	7295	7471	7651	7836	8024
DVL PRD EXPENSE	0	0	0	0	0	0	0	0	0	0
DVL PRD INTEREST	0	0	0	0	0	0	0	0	0	0
INDIRECT DVL COST	0	0	0	0	0	0	0	0	0	0
OPER & MAINT EXPENSE	2377	2439	2502	2567	2633	2701	2771	2842	2916	2991
OTHER OPER PRD COST	0	0	0	0	0	0	0	0	0	0
OPER PRD INTEREST	1149	1114	1077	1039	999	959	916	873	827	781
DEPRECIATION	2553	2353	851	851	851	851	851	851	851	851
TOTAL COST	12555	12737	11221	11412	11606	11805	12009	12217	12430	12647
TAXABLE INCOME	2041	2278	4225	4479	4741	5012	5291	5581	5879	6188
INCOME TAX	1020	1139	2113	2240	2370	2506	2646	2790	2940	3094
AFTER TAX OUTLAYS										
DEBT PRINCIPAL	1016	1051	1088	1126	1165	1206	1248	1292	1337	1384
EQUITY CONTRIBUTED	0	0	0	0	0	0	0	0	0	0
TOTAL AFTER TAX OUTLAYS	1016	1051	1088	1126	1165	1206	1248	1292	1337	1384
AFTER-TAX CASH FLOW	2558	2641	1876	1965	2056	2151	2248	2349	2453	2561
CUMULATIVE CASH FLOW	13392	16033	17909	19873	21929	24080	26328	28677	31131	33691

FINANCIAL ANALYSIS BY TIME PERIOD
BOILER PLANT REHABILITATION #4
All Monetary Values In: Rs(000)

TIME PERIOD	1q/1992	2q/1992	3q/1992	4q/1992	1q/1993	2q/1993	3q/1993	4q/1993	1q/1994	2q/1994
PROJECT REVENUES										
ENERGY SAVED (TONNES OF OIL)	1074	1074	1074	1074	1074	1074	1074	1074	1074	1074
PRICE ENERGY SAVED	11.19	11.52	11.85	12.19	12.54	12.90	13.27	13.65	14.04	14.44
VALUE ENERGY SAVED	12022	12368	12723	13089	13465	13852	14250	14659	15080	15514
ENERGY SOLD (MWH ELECTRICITY)	1620	1620	1620	1620	1620	1620	1620	1620	1620	1620
PRICE ENERGY SOLD	4.54	4.67	4.80	4.94	5.09	5.23	5.38	5.54	5.69	5.86
VALUE ENERGY SOLD	7354	7566	7783	8007	8237	8474	8717	8968	9225	9491
TOTAL REVENUE	19377	19933	20506	21095	21702	22325	22967	23627	24306	25004
BEFORE TAX COSTS										
ENERGY USED (TONNES OF WOOD)	6863	6863	6863	6863	6863	6863	6863	6863	6863	6863
PRICE ENERGY USED	1.20	1.23	1.26	1.29	1.32	1.35	1.38	1.41	1.45	1.48
VALUE ENERGY USED	8218	8416	8619	8827	9040	9258	9481	9710	9944	10184
DVL PRD EXPENSE	0	0	0	0	0	0	0	0	0	0
DVL PRD INTEREST	0	0	0	0	0	0	0	0	0	0
INDIRECT DVL COST	0	0	0	0	0	0	0	0	0	0
OPER & MAINT EXPENSE	3069	3148	3229	3313	3399	3486	3577	3669	3764	3861
OTHER OPER PRD COST	0	0	0	0	0	0	0	0	0	0
OPER PRD INTEREST	732	682	630	576	521	463	404	342	278	212
DEPRECIATION	851	851	851	851	851	851	851	851	0	0
TOTAL COST	12870	13097	13330	13567	13810	14058	14312	14572	13986	14257
TAXABLE INCOME	6507	6836	7177	7528	7892	8267	8655	9055	10320	10747
INCOME TAX	3253	3418	3588	3764	3946	4133	4327	4528	5160	5374
AFTER TAX OUTLAYS										
DEBT PRINCIPAL	1433	1483	1535	1588	1644	1701	1761	1823	1886	1952
EQUITY CONTRIBUTED	0	0	0	0	0	0	0	0	0	0
TOTAL AFTER TAX OUTLAYS	1433	1483	1535	1588	1644	1701	1761	1823	1886	1952
AFTER-TAX CASH FLOW	2672	2786	2905	3027	3153	3283	3417	3556	3274	3421
CUMULATIVE CASH FLOW	36363	39150	42054	45081	48234	51517	54935	58491	61764	65185

SUMMARY RESULTS OF SENSITIVITY ANALYSIS
BOILER PLANT REHABILITATION #4

BASE OR EXPECTED CASE

PRESENT VALUE OF AFTER TAX CASH FLOW
AT 20.0%: 12655
INTERNAL RATE OF RETURN: 35.3%
CUMULATIVE CASH FLOW BECOMES POSITIVE IN 2q/1988.

ENERGY SAVINGS/SALES 10% GREATER THAN EXPECTED

PRESENT VALUE OF AFTER TAX CASH FLOW
AT 20.0%: 22343
INTERNAL RATE OF RETURN: 44.6%
CUMULATIVE CASH FLOW BECOMES POSITIVE IN 4q/1987.

ENERGY SAVINGS/SALES 10% LESS THAN EXPECTED

PRESENT VALUE OF AFTER TAX CASH FLOW
AT 20.0%: 2967
INTERNAL RATE OF RETURN: 24.1%
CUMULATIVE CASH FLOW BECOMES POSITIVE IN 1q/1989.

DIRECT DEVELOPMENT COSTS 10% GREATER THAN EXPECTED

PRESENT VALUE OF AFTER TAX CASH FLOW
AT 20.0%: 10093
INTERNAL RATE OF RETURN: 31.6%
CUMULATIVE CASH FLOW BECOMES POSITIVE IN 3q/1988.

DIRECT DEVELOPMENT COSTS 10% LESS THAN EXPECTED

PRESENT VALUE OF AFTER TAX CASH FLOW
AT 20.0%: 15217
INTERNAL RATE OF RETURN: 39.4%
CUMULATIVE CASH FLOW BECOMES POSITIVE IN 1q/1988.

INTEREST RATES 2 POINTS HIGHER THAN EXPECTED

PRESENT VALUE OF AFTER TAX CASH FLOW
AT 20.0%: 11574
INTERNAL RATE OF RETURN: 34.1%
CUMULATIVE CASH FLOW BECOMES POSITIVE IN 2q/1988.

INTEREST RATES 2 POINTS LESS THAN EXPECTED

PRESENT VALUE OF AFTER TAX CASH FLOW
AT 20.0%: 13688
INTERNAL RATE OF RETURN: 36.4%
CUMULATIVE CASH FLOW BECOMES POSITIVE IN 2q/1988.

SUMMARY RESULTS OF SOCIAL VALUE AND
FOREIGN CURRENCY REQUIREMENTS ANALYSIS

BOILER PLANT REHABILITATION #4

All Monetary Values In: Rs(000)

PROJECT SCHEDULE
DEVELOPMENT STARTS: 3q/1984
OPERATIONS START: 1q/1986
LAST TIME PERIOD IN ANALYSIS: 2q/1994

SOCIAL DISCOUNT RATE: 10.0%

SOCIAL VALUE RESULTS

TOTAL DEVELOPMENT PERIOD COST: 55187

TOTAL NET BENEFITS IN OPERATING PERIOD: 141843

PRESENT VALUE OF NET BENEFIT STREAM AT
10.0%: 33634

FOREIGN CURRENCY REQUIREMENTS RESULTS

FOREIGN CURRENCY REQUIRED IN DEVELOPMENT PERIOD: 45456

FOREIGN CURRENCY REQUIRED IN OPERATING PERIOD: -372370

PRESENT VALUE OF FOREIGN CURRENCY REQUIREMENT AT
10.0%: -163898

(Positive values mean the project is a net user of foreign currency; Negative values mean the project is a net generator of foreign currency.)

SOCIAL VALUE ANALYSIS BY TIME PERIOD
BOILER PLANT REHABILITATION #4

All Monetary Values In: Rs(000)
Taxes And Interest Not Considered In This Analysis

TIME PERIOD	3q/1984	4q/1984	1q/1985	2q/1985	3q/1985	4q/1985	1q/1986	2q/1986	3q/1986	4q/1986
PROJECT BENEFITS										
ENERGY SAVED (TONNES OF OIL)	0	0	0	0	0	0	1074	1074	1074	1074
PRICE ENERGY SAVED	0.00	0.00	0.00	0.00	0.00	0.00	3.69	3.71	3.73	3.75
VALUE ENERGY SAVED	0	0	0	0	0	0	3965	3985	4004	4024
ENERGY SOLD (MWH ELECTRICITY)	0	0	0	0	0	0	1620	1620	1620	1620
PRICE ENERGY SOLD	0.00	0.00	0.00	0.00	0.00	0.00	3.50	3.50	3.50	3.50
VALUE ENERGY SOLD	0	0	0	0	0	0	5670	5670	5670	5670
TOTAL BENEFITS	0	0	0	0	0	0	9635	9655	9674	9694
PROJECT COSTS										
ENERGY USED (TONNES OF WOOD)	0	0	0	0	0	0	6863	6863	6863	6863
PRICE ENERGY USED	0.00	0.00	0.00	0.00	0.00	0.00	0.50	0.50	0.50	0.50
VALUE ENERGY USED	0	0	0	0	0	0	3432	3432	3432	3432
ENG/DESIGN COST	700	1045	3135	1307	920	1556	0	0	0	0
DIRECT CAP COST	19118	6999	12072	5243	3092	0	0	0	0	0
INDIRECT DVL COST	0	0	0	0	0	0	0	0	0	0
OPER & MAINT EXPENS.	0	0	0	0	0	0	1809	1809	1809	1809
OTHER OPER PRD CST	0	0	0	0	0	0	0	0	0	0
TOTAL COST	19818	8044	15207	6550	4012	1556	5241	5241	5241	5241
NET BENEFIT STREAM	-19818	-8044	-15207	-6550	-4012	-1556	4394	4414	4434	4454
CUMULATIVE NET BENEFITS	-19818	-27862	-43069	-49619	-53631	-55187	-50793	-46378	-41944	-37491

SOCIAL VALUE ANALYSIS BY TIME PERIOD
BOILER PLANT REHABILITATION #4

All Monetary Values In: Rs(000)
Taxes And Interest Not Considered In This Analysis

TIME PERIOD	1q/1987	2q/1987	3q/1987	4q/1987	1q/1988	2q/1988	3q/1988	4q/1988	1q/1989	2q/1989
PROJECT BENEFITS										
ENERGY SAVED (TONNES OF OIL)	1074	1074	1074	1074	1074	1074	1074	1074	1074	1074
PRICE ENERGY SAVED	3.77	3.78	3.80	3.82	3.84	3.86	3.88	3.90	3.92	3.94
VALUE ENERGY SAVED	4044	4064	4085	4105	4125	4146	4166	4187	4208	4229
ENERGY SOLD (MWH ELECTRICITY)	1620	1620	1620	1620	1620	1620	1620	1620	1620	1620
PRICE ENERGY SOLD	3.50	3.50	3.50	3.50	3.50	3.50	3.50	3.50	3.50	3.50
VALUE ENERGY SOLD	5670	5670	5670	5670	5670	5670	5670	5670	5670	5670
TOTAL BENEFITS	9714	9734	9755	9775	9795	9816	9836	9857	9878	9899
PROJECT COSTS										
ENERGY USED (TONNES OF WOOD)	6863	6863	6863	6863	6863	6863	6863	6863	6863	6863
PRICE ENERGY USED	0.50	0.50	0.50	0.50	0.50	0.50	0.50	0.50	0.50	0.50
VALUE ENERGY USED	3432	3432	3432	3432	3432	3432	3432	3432	3432	3432
ENG/DESIGN COST	0	0	0	0	0	0	0	0	0	0
DIRECT CAP COST	0	0	0	0	0	0	0	0	0	0
INDIRECT DVL COST	0	0	0	0	0	0	0	0	0	0
OPER & MAINT EXPENSE	1809	1809	1809	1809	1809	1809	1809	1809	1809	1809
OTHER OPER PRD CST	0	0	0	0	0	0	0	0	0	0
TOTAL COST	5241	5241	5241	5241	5241	5241	5241	5241	5241	5241
NET BENEFIT STREAM	4474	4494	4514	4534	4555	4575	4596	4616	4637	4658
CUMULATIVE NET BENEFITS	-33017	-28523	-24009	-19475	-14920	-10345	-5749	-1133	3505	8163

SOCIAL VALUE ANALYSIS BY TIME PERIOD
BOILER PLANT REHABILITATION #4

All Monetary Values In: Rs(000)
Taxes And Interest Not Considered In This Analysis

TIME PERIOD	3q/1989	4q/1989	1q/1990	2q/1990	3q/1990	4q/1990	1q/1991	2q/1991	3q/1991	4q/1991
PROJECT BENEFITS										
ENERGY SAVED (TONNES OF OIL)	1074	1074	1074	1074	1074	1074	1074	1074	1074	1074
PRICE ENERGY SAVED	3.96	3.98	4.00	4.02	4.04	4.06	4.08	4.10	4.12	4.14
VALUE ENERGY SAVED	4250	4271	4292	4313	4335	4356	4378	4399	4421	4443
ENERGY SOLD (MWH ELECTRICITY)	1620	1620	1620	1620	1620	1620	1620	1620	1620	1620
PRICE ENERGY SOLD	3.50	3.50	3.50	3.50	3.50	3.50	3.50	3.50	3.50	3.50
VALUE ENERGY SOLD	5670	5670	5670	5670	5670	5670	5670	5670	5670	5670
TOTAL BENEFITS	9920	9941	9962	9983	10005	10026	10048	10069	10091	10113
PROJECT COSTS										
ENERGY USED (TONNES OF WOOD)	6863	6863	6863	6863	6863	6863	6863	6863	6863	6863
PRICE ENERGY USED	0.50	0.50	0.50	0.50	0.50	0.50	0.70	0.70	0.70	0.70
VALUE ENERGY USED	3432	3432	3432	3432	3432	3432	4804	4804	4804	4804
ENG/DESIGN COST	0	0	0	0	0	0	0	0	0	0
DIRECT CAP COST	0	0	0	0	0	0	0	0	0	0
INDIRECT DVL COST	0	0	0	0	0	0	0	0	0	0
OPER & MAINT EXPENSE	1809	1809	1809	1809	1809	1809	1809	1809	1809	1809
OTHER OPER PRD CST	0	0	0	0	0	0	0	0	0	0
TOTAL COST	5241	5241	5241	5241	5241	5241	6613	6613	6613	6613
NET BENEFIT STREAM	4679	4700	4721	4743	4764	4786	3435	3456	3478	3500
CUMULATIVE NET BENEFITS	12842	17542	22263	27006	31770	36555	39990	43446	46924	50424

SOCIAL VALUE ANALYSIS BY TIME PERIOD
BOILER PLANT REHABILITATION #4

All Monetary Values In: Rs(000)
Taxes And Interest Not Considered In This Analysis

TIME PERIOD	1q/1992	2q/1992	3q/1992	4q/1992	1q/1993	2q/1993	3q/1993	4q/1993	1q/1994	2q/1994
PROJECT BENEFITS										
ENERGY SAVED (TONNES OF OIL)	1074	1074	1074	1074	1074	1074	1074	1074	1074	1074
PRICE ENERGY SAVED	4.16	4.18	4.20	4.22	4.24	4.26	4.28	4.30	4.33	4.35
VALUE ENERGY SAVED	4465	4487	4510	4532	4555	4577	4600	4623	4646	4669
ENERGY SOLD (MWH ELECTRICITY)	1620	1620	1620	1620	1620	1620	1620	1620	1620	1620
PRICE ENERGY SOLD	3.50	3.50	3.50	3.50	3.50	3.50	3.50	3.50	3.50	3.50
VALUE ENERGY SOLD	5670	5670	5670	5670	5670	5670	5670	5670	5670	5670
TOTAL BENEFITS	10135	10157	10180	10202	10225	10247	10270	10293	10316	10339
PROJECT COSTS										
ENERGY USED (TONNES OF WOOD)	6863	6863	6863	6863	6863	6863	6863	6863	6863	6863
PRICE ENERGY USED	0.70	0.70	0.70	0.70	0.70	0.70	0.70	0.70	0.70	0.70
VALUE ENERGY USED	4804	4804	4804	4804	4804	4804	4804	4804	4804	4804
ENG/DESIGN COST	0	0	0	0	0	0	0	0	0	0
DIRECT CAP COST	0	0	0	0	0	0	0	0	0	0
INDIRECT DVL COST	0	0	0	0	0	0	0	0	0	0
OPER & MAINT EXPENSE	1809	1809	1809	1809	1809	1809	1809	1809	1809	1809
OTHER OPER PRD CST	0	0	0	0	0	0	0	0	0	0
TOTAL COST	6613	6613	6613	6613	6613	6613	6613	6613	6613	6613
NET BENEFIT STREAM	3522	3544	3567	3589	3611	3634	3657	3680	3703	3726
CUMULATIVE NET BENEFITS	53947	57491	61057	64646	68258	71892	75548	79228	82931	86656

FOREIGN CURRENCY REQUIREMENTS BY TIME PERIOD
BOILER PLANT REHABILITATION #4

All Monetary Values In: Rs(000)
Positive Values Indicate Use Of Foreign Currency
Negative Values Indicate Generation Of Foreign Currency

TIME PERIOD	3q/1984	4q/1984	1q/1985	2q/1985	3q/1985	4q/1985	1q/1986	2q/1986	3q/1986	4q/1986
VALUE ENERGY SAVED	0	0	0	0	0	0	-5482	-5639	-5801	-5968
VALUE ENERGY SOLD	0	0	0	0	0	0	-2608	-2683	-2760	-2840
ENG/DESIGN COST	488	731	2245	958	691	1267	0	0	0	0
DIRECT CAP COST	14726	5391	9299	4039	2382	0	0	0	0	0
INDIRECT DVL COST	0	0	0	0	0	0	0	0	0	0
OPER & MAINT EXPENSE	0	0	0	0	0	0	1152	1182	1213	1244
ENERGY CONSUMED	0	0	0	0	0	0	0	0	0	0
OTHER OPER PRD CST	0	0	0	0	0	0	0	0	0	0
INTEREST PAYMENTS	0	321	456	708	827	989	955	955	955	955
NET FOREIGN CURRENCY REQUIRED	15214	6442	11999	5704	3900	2196	-5983	-6186	-6394	-6609
CUMULATIVE FOREIGN CURRENCY REQUIRED	15214	21657	33656	39360	43260	45456	39473	33288	26894	20285

FOREIGN CURRENCY REQUIREMENTS BY TIME PERIOD
BOILER PLANT REHABILITATION #4

All Monetary Values In: Rs(000)
Positive Values Indicate Use Of Foreign Currency
Negative Values Indicate Generation Of Foreign Currency

TIME PERIOD	1q/1987	2q/1987	3q/1987	4q/1987	1q/1988	2q/1988	3q/1988	4q/1988	1q/1989	2q/1989
VALUE ENERGY SAVED	-6139	-6316	-6497	-6684	-6876	-7074	-7277	-7486	-7701	-7923
VALUE ENERGY SOLD	-2921	-3005	-3091	-3180	-3272	-3366	-3462	-3562	-3664	-3770
ENG/DESIGN COST	0	0	0	0	0	0	0	0	0	0
DIRECT CAP COST	0	0	0	0	0	0	0	0	0	0
INDIRECT DVL COST	0	0	0	0	0	0	0	0	0	0
OPER & MAINT EXPENSE	1276	1309	1343	1378	1414	1450	1488	1526	1566	1606
ENERGY CONSUMED	0	0	0	0	0	0	0	0	0	0
OTHER OPER PRD CST	0	0	0	0	0	0	0	0	0	0
INTEREST PAYMENTS	955	938	921	903	884	865	846	825	804	782
NET FOREIGN CURRENCY REQUIRED	-6830	-7074	-7325	-7584	-7850	-8124	-8406	-8697	-8996	-9304
CUMULATIVE FOREIGN CURRENCY REQUIRED	13455	6381	-944	-8527	-16377	-24501	-32908	-41605	-50601	-59906

FOREIGN CURRENCY REQUIREMENTS BY TIME PERIOD
BOILER PLANT REHABILITATION #4

All Monetary Values In: Rs(000)
Positive Values Indicate Use Of Foreign Currency
Negative Values Indicate Generation Of Foreign Currency

TIME PERIOD	3q/1989	4q/1989	1q/1990	2q/1990	3q/1990	4q/1990	1q/1991	2q/1991	3q/1991	4q/1991
VALUE ENERGY SAVED	-8150	-8385	-8626	-8873	-9128	-9391	-9661	-9938	-10224	-10518
VALUE ENERGY SOLD	-3878	-3989	-4104	-4222	-4343	-4468	-4597	-4729	-4865	-5004
ENG/DESIGN COST	0	0	0	0	0	0	0	0	0	0
DIRECT CAP COST	0	0	0	0	0	0	0	0	0	0
INDIRECT DVL COST	0	0	0	0	0	0	0	0	0	0
OPER & MAINT EXPENSE	1648	1690	1734	1779	1825	1872	1920	1970	2021	2073
ENERGY CONSUMED	0	0	0	0	0	0	0	0	0	0
OTHER OPER PRD CST	0	0	0	0	0	0	0	0	0	0
INTEREST PAYMENTS	759	736	711	686	660	633	605	577	547	516
NET FOREIGN CURRENCY REQUIRED	-9622	-9948	-10284	-10630	-10987	-11354	-11732	-12120	-12521	-12933
CUMULATIVE FOREIGN CURRENCY REQUIRED	-69527	-79475	-89760	-100390	-111377	-122731	-134462	-146583	-159104	-172037

FOREIGN CURRENCY REQUIREMENTS BY TIME PERIOD
BOILER PLANT REHABILITATION #4

All Monetary Values In: Rs(000)
Positive Values Indicate Use Of Foreign Currency
Negative Values Indicate Generation Of Foreign Currency

TIME PERIOD	1q/1992	2q/1992	3q/1992	4q/1992	1q/1993	2q/1993	3q/1993	4q/1993	1q/1994	2q/1994
VALUE ENERGY SAVED	-10820	-11131	-11451	-11780	-12118	-12467	-12825	-13193	-13572	-13962
VALUE ENERGY SOLD	-5148	-5296	-5448	-5605	-5766	-5932	-6102	-6277	-6458	-6643
ENG/DESIGN COST	0	0	0	0	0	0	0	0	0	0
DIRECT CAP COST	0	0	0	0	0	0	0	0	0	0
INDIRECT DVL COST	0	0	0	0	0	0	0	0	0	0
OPER & MAINT EXPENSE	2127	2182	2238	2296	2355	2416	2479	2543	2608	2676
ENERGY CONSUMED	0	0	0	0	0	0	0	0	0	0
OTHER OPER PRD CST	0	0	0	0	0	0	0	0	0	0
INTEREST PAYMENTS	494	451	416	381	344	306	267	226	184	140
NET FOREIGN CURRENCY REQUIRED	-13358	-13795	-14245	-14708	-15185	-15676	-16181	-16702	-17238	-17790
CUMULATIVE FOREIGN CURRENCY REQUIRED	-185394	-199189	-213434	-228142	-243326	-259002	-275184	-291886	-309124	-326914

CONSERVATION PROJECT FINANCIAL/ECONOMIC EVALUATION

BOILER PLANT REHABILITATION #5

Prepared for:
MR. PALITA SUBASINGHE
SRI LANKA TYRE CORPORATION
KELANIYA, SRI LANKA

Prepared by:
EDMAC
Ministry of Power and Energy
50, Sir Chittampalam A. Gardiner Mawatha
Colombo -02,Sri Lanka

JUNE 22, 1984

ACKNOWLEDGEMENT

This feasibility study was conducted under a joint program of the Sri Lanka Ministry of Power and Energy and the United States Agency for International Development. The analyses for the study were performed using a conservation project financial evaluation model developed by Hagler, Bailly & Company under contract to the Office of Energy, Bureau for Science and Technology, U.S. AID. For information on the model, contact:

Pamela Baldwin, Project Officer
Energy Policy Development and Conservation Project
S&T/EY--USAID
Washington, D.C. USA 20523
(703) 235-8918

or

Hagler, Bailly & Company
2301 M Street NW
Washington, DC USA 20037
(202) 463-7575
Telex: 710-822-1150

TABLE OF CONTENTS

Summary Project Information	Page 1
Summary Results of Financial Analysis	Page 2
Development Period Financial Summary	Page 3
Project Financial Analysis	Page 4
Summary Results Of Sensitivity Analysis	Page 8
Summary Results Of Social Value And Foreign Currency Requirements Analyses	Page 9
Social Value Analysis	Page 10
Foreign Currency Requirements Analysis	Page 14

LIST OF ABBREVIATIONS USED IN THIS REPORT:

CAP: Capital
DVL: Development
ENG: Engineering
IND: Indirect
PRD: Period
RQRD: Required
Q: Quantity
OPER & MAINT: Operating & Maintenance

SUMMARY PROJECT INFORMATION

Project Name: BOILER PLANT REHABILITATION #5

Project Location: KELANIYA, SRI LANKA

Company: SRI LANKA TYRE CORPORATION

Company Contact: MR. PALITA SUBASINGHE, SENIOR POWER ENGINEER

Telephone: 521-241

Project Description:

This study is concerned with replacing an inefficient oil-fired boiler plant with modern, packaged multi-fuel fired boilers of high efficiency. The boilers would be fired on a mixture of approximately 85% coal and 15% oil. Boiler efficiency would be expected to increase from 54% to 80%.

Start of Project Development: 3q/1984

Start of Project Operation: 1q/1986

SUMMARY RESULTS OF FINANCIAL ANALYSIS

BOILER PLANT REHABILITATION #5

All Monetary Values In: Rs(000)

PROJECT SCHEDULE
DEVELOPMENT STARTS: 3q/1984
OPERATIONS START: 1q/1986
LAST TIME PERIOD IN ANALYSIS: 2q/1994

DEVELOPMENT PERIOD COSTS
TOTAL DIRECT CAPITAL COST: 31481
TOTAL DIRECT DVL PERIOD COST (includes interest): 33686
TOTAL INDIRECT DVL PERIOD COST: 0

FINANCIAL STRUCTURE
DEBT FRACTION: 60.0%
TOTAL DEBT REQUIRED: 20212
TOTAL EQUITY CONTRIBUTED: 13474

DEBT TERMS
DEVELOPMENT PRD INTEREST RATE: 14.0%
OPERATING PERIOD INTEREST RATE: 14.0%
OPERATING PERIOD DEBT TERM: 32 QUARTERS
DEBT MORATORIUM PERIOD: 3 QUARTERS

MARGINAL TAX RATE: 50.0%

FINANCIAL PERFORMANCE

TARGET AFTER TAX RETURN ON EQUITY: 20.0%
PRESENT VALUE OF AFTER TAX CASH FLOW
AT 20.0%: 24296
INTERNAL RATE OF RETURN: 68.9%
CUMULATIVE CASH FLOW BECOMES POSITIVE IN 1q/1987.

DEVELOPMENT PERIOD FINANCIAL SUMMARY
BOILER PLANT REHABILITATION #5

All Monetary Values In: Rs(000)

TIME PERIOD	3q/1984	4q/1984	1q/1985	2q/1985	3q/1985	4q/1985
ENG/DESIGN COST	400	750	768	1049	806	1643
DIRECT CAPITAL COST	7400	6850	6452	3042	1772	550
DVL PRD INTEREST AT 14.0%	0	164	327	485	581	648
TOTAL FINANCING REQRD	7800	7764	7547	4576	3159	2840
EQUITY CONTRIBUTED	3120	3106	3019	1830	1264	1136
DEBT REQUIRED	4680	4658	4528	2745	1896	1704
CUMULATIVE EQUITY	3120	6226	9244	11075	12338	13474
CUMULATIVE DEBT	4680	9338	13866	16612	18507	20212
CUMULATIVE CAPITAL	7800	15564	23111	27686	30846	33686
DVL COST EXPENSED	400	750	768	1049	806	1643
DVL COST DEPRECIATED	7400	6850	6452	3042	1772	550
INDIRECT DVL COST	0	0	0	0	0	0
CUMULATIVE IND COST	0	0	0	0	0	0

FINANCIAL ANALYSIS BY TIME PERIOD
BOILER PLANT REHABILITATION #5
All Monetary Values In: Rs(000)

TIME PERIOD	3q/1984	4q/1984	1q/1985	2q/1985	3q/1985	4q/1985	1q/1986	2q/1986	3q/1986	4q/1986
PROJECT REVENUES										
ENERGY SAVED (TONNES OF OIL)	0	0	0	0	0	0	1196	1196	1196	1196
PRICE ENERGY SAVED	0.00	0.00	0.00	0.00	0.00	0.00	5.67	5.83	6.00	6.17
VALUE ENERGY SAVED	0	0	0	0	0	0	6783	6978	7178	7384
ENERGY SOLD ()	0	0	0	0	0	0	0	0	0	0
PRICE ENERGY SOLD	0.00	0.00	0.00	0.00	0.00	0.00	0.00	0.00	0.00	0.00
VALUE ENERGY SOLD	0	0	0	0	0	0	0	0	0	0
TOTAL REVENUE	0	0	0	0	0	0	6783	6978	7178	7384
BEFORE TAX COSTS										
ENERGY USED (TONNES OF COAL)	0	0	0	0	0	0	1224	1224	1224	1224
PRICE ENERGY USED	0.00	0.00	0.00	0.00	0.00	0.00	1.67	1.72	1.76	1.81
VALUE ENERGY USED	0	0	0	0	0	0	2049	2103	2159	2216
DVL PRD EXPENSE	400	750	768	1049	806	1643	0	0	0	0
DVL PRD INTEREST	0	164	327	485	581	648	707	0	0	0
INDIRECT DVL COST	0	0	0	0	0	0	0	0	0	0
OPER & MAINT EXPENSE	0	0	0	0	0	0	1135	1164	1195	1225
OTHER OPER PRD COST	0	0	0	0	0	0	0	0	0	0
OPER PRD INTEREST	0	0	0	0	0	0	0	707	707	707
DEPRECIATION	0	0	0	0	0	6	1222	1222	1222	1222
TOTAL COST	400	914	1095	1534	1387	2290	5113	5197	5283	5371
TAXABLE INCOME	-400	-914	-1095	-1534	-1387	-2290	1669	1781	1896	2014
INCOME TAX	-200	-457	-547	-767	-693	-1145	835	890	948	1007
AFTER TAX OUTLAYS										
DEBT PRINCIPAL	0	0	0	0	0	0	0	0	0	0
EQUITY CONTRIBUTED	3120	3106	3019	1830	1264	1136	0	0	0	0
TOTAL AFTER TAX OUTLAYS	3120	3106	3019	1830	1264	1136	0	0	0	0
AFTER-TAX CASH FLOW	-2920	-2649	-2471	-1063	-570	9	2057	2112	2170	2229
CUMULATIVE CASH FLOW	-2920	-5569	-8040	-9103	-9673	-9664	-7608	-5496	-3326	-1097

FINANCIAL ANALYSIS BY TIME PERIOD
BOILER PLANT REHABILITATION #5
All Monetary Values In: Rs(000)

TIME PERIOD	1q/1987	2q/1987	3q/1987	4q/1987	1q/1988	2q/1988	3q/1988	4q/1988	1q/1989	2q/1989
PROJECT REVENUES										
ENERGY SAVED (TONNES OF OIL)	1196	1196	1196	1196	1196	1196	1196	1196	1196	1196
PRICE ENERGY SAVED	6.35	6.53	6.72	6.92	7.11	7.32	7.53	7.74	7.97	8.20
VALUE ENERGY SAVED	7597	7815	8039	8270	8508	8753	9004	9263	9529	9803
ENERGY SOLD ()	0	0	0	0	0	0	0	0	0	0
PRICE ENERGY SOLD	0.00	0.00	0.00	0.00	0.00	0.00	0.00	0.00	0.00	0.00
VALUE ENERGY SOLD	0	0	0	0	0	0	0	0	0	0
TOTAL REVENUE	7597	7815	8039	8270	8508	8753	9004	9263	9529	9803
BEFORE TAX COSTS										
ENERGY USED (TONNES OF COAL)	1224	1224	1224	1224	1224	1224	1224	1224	1224	1224
PRICE ENERGY USED	1.86	1.91	1.96	2.01	2.06	2.12	2.17	2.23	2.29	2.35
VALUE ENERGY USED	2274	2334	2396	2460	2525	2591	2660	2730	2802	2876
DVL PRD EXPENSE	0	0	0	0	0	0	0	0	0	0
DVL PRD INTEREST	0	0	0	0	0	0	0	0	0	0
INDIRECT DVL COST	0	0	0	0	0	0	0	0	0	0
OPER & MAINT EXPENSE	1257	1290	1323	1357	1393	1429	1466	1504	1543	1583
OTHER OPER PRD COST	0	0	0	0	0	0	0	0	0	0
OPER PRD INTEREST	707	695	682	669	655	641	627	611	596	579
DEPRECIATION	1222	1222	1222	1222	1222	1222	1222	1222	1222	1222
TOTAL COST	5461	5541	5624	5708	5794	5883	5974	6067	6162	6260
TAXABLE INCOME	2136	2274	2416	2563	2714	2870	3030	3196	3367	3543
INCOME TAX	1068	1137	1208	1281	1357	1435	1515	1598	1683	1771
AFTER TAX OUTLAYS										
DEBT PRINCIPAL	353	365	378	391	405	419	433	449	464	480
EQUITY CONTRIBUTED	0	0	0	0	0	0	0	0	0	0
TOTAL AFTER TAX OUTLAYS	353	365	378	391	405	419	433	449	464	480
AFTER-TAX CASH FLOW	1937	1994	2052	2112	2174	2238	2304	2371	2441	2513
CUMULATIVE CASH FLOW	840	2834	4886	6998	9172	11410	13714	16085	18526	21039

FINANCIAL ANALYSIS BY TIME PERIOD
BOILER PLANT REHABILITATION #5
All Monetary Values In: Rs(000)

TIME PERIOD	3q/1989	4q/1989	1q/1990	2q/1990	3q/1990	4q/1990	1q/1991	2q/1991	3q/1991	4q/1991
PROJECT REVENUES										
ENERGY SAVED (TONNES OF OIL)	1196	1196	1196	1196	1196	1196	1196	1196	1196	1196
PRICE ENERGY SAVED	8.43	8.67	8.92	9.18	9.44	9.72	9.99	10.28	10.58	10.88
VALUE ENERGY SAVED	10085	10374	10673	10979	11295	11619	11953	12297	12650	13014
ENERGY SOLD ()	0	0	0	0	0	0	0	0	0	0
PRICE ENERGY SOLD	0.00	0.00	0.00	0.00	0.00	0.00	0.00	0.00	0.00	0.00
VALUE ENERGY SOLD	0	0	0	0	0	0	0	0	0	0
TOTAL REVENUE	10085	10374	10673	10979	11295	11619	11953	12297	12650	13014
BEFORE TAX COSTS										
ENERGY USED (TONNES OF COAL)	1224	1224	1224	1224	1224	1224	1224	1224	1224	1224
PRICE ENERGY USED	2.41	2.48	2.54	2.61	2.68	2.75	2.82	2.90	2.97	3.05
VALUE ENERGY USED	2952	3030	3110	3192	3277	3364	3453	3544	3638	3734
DVL PRD EXPENSE	0	0	0	0	0	0	0	0	0	0
DVL PRD INTEREST	0	0	0	0	0	0	0	0	0	0
INDIRECT DVL COST	0	0	0	0	0	0	0	0	0	0
OPER & MAINT EXPENSE	1624	1666	1709	1753	1798	1845	1893	1942	1992	2044
OTHER OPER PRD COST	0	0	0	0	0	0	0	0	0	0
OPER PRD INTEREST	563	545	527	509	489	469	449	427	405	382
DEPRECIATION	1222	1222	407	407	407	407	407	407	407	407
TOTAL COST	6360	6463	5754	5862	5972	6085	6201	6320	6442	6567
TAXABLE INCOME	3724	3911	4919	5118	5323	5534	5752	5977	6208	6447
INCOME TAX	1862	1956	2459	2559	2661	2767	2876	2988	3104	3223
AFTER TAX OUTLAYS										
DEBT PRINCIPAL	497	515	533	551	571	591	611	633	655	678
EQUITY CONTRIBUTED	0	0	0	0	0	0	0	0	0	0
TOTAL AFTER TAX OUTLAYS	497	515	533	551	571	591	611	633	655	678
AFTER-TAX CASH FLOW	2587	2663	2334	2415	2498	2584	2672	2763	2857	2953
CUMULATIVE CASH FLOW	23626	26288	28622	31037	33535	36119	38791	41554	44410	47363

FINANCIAL ANALYSIS BY TIME PERIOD
BOILER PLANT REHABILITATION #5
All Monetary Values In: Rs(000)

TIME PERIOD	1q/1992	2q/1992	3q/1992	4q/1992	1q/1993	2q/1993	3q/1993	4q/1993	1q/1994	2q/1994
PROJECT REVENUES										
ENERGY SAVED (TONNES OF OIL)	1196	1196	1196	1196	1196	1196	1196	1196	1196	1196
PRICE ENERGY SAVED	11.19	11.52	11.85	12.19	12.54	12.90	13.27	13.65	14.04	14.44
VALUE ENERGY SAVED	13388	13772	14168	14575	14994	15425	15868	16324	16794	17276
ENERGY SOLD ()	0	0	0	0	0	0	0	0	0	0
PRICE ENERGY SOLD	0.00	0.00	0.00	0.00	0.00	0.00	0.00	0.00	0.00	0.00
VALUE ENERGY SOLD	0	0	0	0	0	0	0	0	0	0
TOTAL REVENUE	13388	13772	14168	14575	14994	15425	15868	16324	16794	17276
BEFORE TAX COSTS										
ENERGY USED (TONNES OF COAL)	1224	1224	1224	1224	1224	1224	1224	1224	1224	1224
PRICE ENERGY USED	3.13	3.21	3.30	3.39	3.48	3.57	3.66	3.76	3.86	3.96
VALUE ENERGY USED	3832	3934	4038	4144	4254	4366	4482	4600	4722	4847
DVL PRD EXPENSE	0	0	0	0	0	0	0	0	0	0
DVL PRD INTEREST	0	0	0	0	0	0	0	0	0	0
INDIRECT DVL COST	0	0	0	0	0	0	0	0	0	0
OPER & MAINT EXPENSE	2097	2151	2207	2264	2322	2383	2444	2508	2573	2639
OTHER OPER PRD COST	0	0	0	0	0	0	0	0	0	0
OPER PRD INTEREST	358	334	309	282	255	227	198	167	136	104
DEPRECIATION	407	407	407	407	407	407	407	407	0	0
TOTAL COST	6695	6826	6960	7098	7239	7383	7531	7683	7431	7590
TAXABLE INCOME	6693	6947	7208	7478	7755	8042	8337	8642	9363	9686
INCOME TAX	3346	3473	3604	3739	3878	4021	4169	4321	4681	4843
AFTER TAX OUTLAYS										
DEBT PRINCIPAL	701	726	751	778	805	833	862	892	924	956
EQUITY CONTRIBUTED	0	0	0	0	0	0	0	0	0	0
TOTAL AFTER TAX OUTLAYS	701	726	751	778	805	833	862	892	924	956
AFTER-TAX CASH FLOW	3052	3155	3260	3368	3480	3595	3714	3836	3758	3887
CUMULATIVE CASH FLOW	50416	53570	56830	60198	63678	67274	70987	74823	78581	82468

28

SUMMARY RESULTS OF SENSITIVITY ANALYSIS
BOILER PLANT REHABILITATION #5

BASE OR EXPECTED CASE

PRESENT VALUE OF AFTER TAX CASH FLOW
AT 20.0%: 24296
INTERNAL RATE OF RETURN: 68.9%
CUMULATIVE CASH FLOW BECOMES POSITIVE IN 1q/1987.

ENERGY SAVINGS/SALES 10% GREATER THAN EXPECTED

PRESENT VALUE OF AFTER TAX CASH FLOW
AT 20.0%: 30990
INTERNAL RATE OF RETURN: 78.7%
CUMULATIVE CASH FLOW BECOMES POSITIVE IN 4q/1986.

ENERGY SAVINGS/SALES 10% LESS THAN EXPECTED

PRESENT VALUE OF AFTER TAX CASH FLOW
AT 20.0%: 17602
INTERNAL RATE OF RETURN: 58.1%
CUMULATIVE CASH FLOW BECOMES POSITIVE IN 2q/1987.

DIRECT DEVELOPMENT COSTS 10% GREATER THAN EXPECTED

PRESENT VALUE OF AFTER TAX CASH FLOW
AT 20.0%: 23064
INTERNAL RATE OF RETURN: 63.7%
CUMULATIVE CASH FLOW BECOMES POSITIVE IN 2q/1987.

DIRECT DEVELOPMENT COSTS 10% LESS THAN EXPECTED

PRESENT VALUE OF AFTER TAX CASH FLOW
AT 20.0%: 25528
INTERNAL RATE OF RETURN: 74.9%
CUMULATIVE CASH FLOW BECOMES POSITIVE IN 1q/1987.

INTEREST RATES 2 POINTS HIGHER THAN EXPECTED

PRESENT VALUE OF AFTER TAX CASH FLOW
AT 20.0%: 23773
INTERNAL RATE OF RETURN: 68%
CUMULATIVE CASH FLOW BECOMES POSITIVE IN 1q/1987.

INTEREST RATES 2 POINTS LESS THAN EXPECTED

PRESENT VALUE OF AFTER TAX CASH FLOW
AT 20.0%: 24797
INTERNAL RATE OF RETURN: 69.7%
CUMULATIVE CASH FLOW BECOMES POSITIVE IN 1q/1987.

SUMMARY RESULTS OF SOCIAL VALUE AND
FOREIGN CURRENCY REQUIREMENTS ANALYSIS

BOILER PLANT REHABILITATION #5

All Monetary Values In: Rs(000)

PROJECT SCHEDULE
DEVELOPMENT STARTS: 3q/1984
OPERATIONS START: 1q/1986
LAST TIME PERIOD IN ANALYSIS: 2q/1994

SOCIAL DISCOUNT RATE: 10.0%

SOCIAL VALUE RESULTS

TOTAL DEVELOPMENT PERIOD COST: 29933

TOTAL NET BENEFITS IN OPERATING PERIOD: 58665

PRESENT VALUE OF NET BENEFIT STREAM AT
10.0%: 5626

FOREIGN CURRENCY REQUIREMENTS RESULTS

FOREIGN CURRENCY REQUIRED IN DEVELOPMENT PERIOD: 22078

FOREIGN CURRENCY REQUIRED IN OPERATING PERIOD: -192875

PRESENT VALUE OF FOREIGN CURRENCY REQUIREMENT AT
10.0%: -86193

(Positive values mean the project is a net user of foreign currency; Negative values mean the project is a net generator of foreign currency.)

SOCIAL VALUE ANALYSIS BY TIME PERIOD
BOILER PLANT REHABILITATION #5

All Monetary Values In: Rs(000)
Taxes And Interest Not Considered In This Analysis

TIME PERIOD	3q/1984	4q/1984	1q/1985	2q/1985	3q/1985	4q/1985	1q/1986	2q/1986	3q/1986	4q/1986
PROJECT BENEFITS										
ENERGY SAVED (TONNES OF OIL)	0	0	0	0	0	0	1196	1196	1196	1196
PRICE ENERGY SAVED	0.00	0.00	0.00	0.00	0.00	0.00	3.69	3.71	3.73	3.75
VALUE ENERGY SAVED	0	0	0	0	0	0	4415	4437	4459	4481
ENERGY SOLD ()	0	0	0	0	0	0	0	0	0	0
PRICE ENERGY SOLD	0.00	0.00	0.00	0.00	0.00	0.00	0.00	0.00	0.00	0.00
VALUE ENERGY SOLD	0	0	0	0	0	0	0	0	0	0
TOTAL BENEFITS	0	0	0	0	0	0	4415	4437	4459	4481
PROJECT COSTS										
ENERGY USED (TONNES OF COAL)	0	0	0	0	0	0	1224	1224	1224	1224
PRICE ENERGY USED	0.00	0.00	0.00	0.00	0.00	0.00	1.35	1.35	1.35	1.36
VALUE ENERGY USED	0	0	0	0	0	0	1649	1653	1657	1661
ENG/DESIGN COST	389	729	729	972	729	1563	0	0	0	0
DIRECT CAP COST	7175	6642	6108	2812	1600	485	0	0	0	0
INDIRECT DVL COST	0	0	0	0	0	0	0	0	0	0
OPER & MAINT EXPENSE	0	0	0	0	0	0	1353	1353	1353	1353
OTHER OPER PRD CST	0	0	0	0	0	0	0	0	0	0
TOTAL COST	7564	7371	6837	3784	2329	2048	3002	3006	3010	3014
NET BENEFIT STREAM	-7564	-7371	-6837	-3784	-2329	-2048	1414	1431	1449	1467
CUMULATIVE NET BENEFITS	-7564	-14935	-21772	-25556	-27885	-29933	-28520	-27088	-25639	-24172

SOCIAL VALUE ANALYSIS BY TIME PERIOD
BOILER PLANT REHABILITATION #5

All Monetary Values In: Rs(000)
Taxes And Interest Not Considered In This Analysis

TIME PERIOD	1q/1987	2q/1987	3q/1987	4q/1987	1q/1988	2q/1988	3q/1988	4q/1988	1q/1989	2q/1989
PROJECT BENEFITS										
ENERGY SAVED (TONNES OF OIL)	1196	1196	1196	1196	1196	1196	1196	1196	1196	1196
PRICE ENERGY SAVED	3.77	3.78	3.80	3.82	3.84	3.86	3.88	3.90	3.92	3.94
VALUE ENERGY SAVED	4504	4526	4549	4571	4594	4617	4639	4663	4686	4709
ENERGY SOLD ()	0	0	0	0	0	0	0	0	0	0
PRICE ENERGY SOLD	0.00	0.00	0.00	0.00	0.00	0.00	0.00	0.00	0.00	0.00
VALUE ENERGY SOLD	0	0	0	0	0	0	0	0	0	0
TOTAL BENEFITS	4504	4526	4549	4571	4594	4617	4639	4663	4686	4709
PROJECT COSTS										
ENERGY USED (TONNES OF COAL)	1224	1224	1224	1224	1224	1224	1224	1224	1224	1224
PRICE ENERGY USED	1.36	1.36	1.37	1.37	1.37	1.38	1.38	1.38	1.39	1.39
VALUE ENERGY USED	1665	1669	1674	1678	1682	1686	1690	1694	1699	1703
ENG/DESIGN COST	0	0	0	0	0	0	0	0	0	0
DIRECT CAP COST	0	0	0	0	0	0	0	0	0	0
INDIRECT DVL COST	0	0	0	0	0	0	0	0	0	0
OPER & MAINT EXPENSE	1353	1353	1353	1353	1353	1353	1353	1353	1353	1353
OTHER OPER PRD CST	0	0	0	0	0	0	0	0	0	0
TOTAL COST	3018	3022	3027	3031	3035	3039	3043	3048	3052	3056
NET BENEFIT STREAM	1485	1504	1522	1540	1559	1577	1596	1615	1634	1653
CUMULATIVE NET BENEFITS	-22686	-21183	-19661	-18121	-16562	-14984	-13388	-11773	-10139	-8486

SOCIAL VALUE ANALYSIS BY TIME PERIOD
BOILER PLANT REHABILITATION #5

All Monetary Values In: Rs(000)
Taxes And Interest Not Considered In This Analysis

TIME PERIOD	3q/1989	4q/1989	1q/1990	2q/1990	3q/1990	4q/1990	1q/1991	2q/1991	3q/1991	4q/1991
PROJECT BENEFITS										
ENERGY SAVED (TONNES OF OIL)	1196	1196	1196	1196	1196	1196	1196	1196	1196	1196
PRICE ENERGY SAVED	3.96	3.98	4.00	4.02	4.04	4.06	4.08	4.10	4.12	4.14
VALUE ENERGY SAVED	4732	4756	4779	4803	4827	4851	4875	4899	4923	4948
ENERGY SOLD ()	0	0	0	0	0	0	0	0	0	0
PRICE ENERGY SOLD	0.00	0.00	0.00	0.00	0.00	0.00	0.00	0.00	0.00	0.00
VALUE ENERGY SOLD	0	0	0	0	0	0	0	0	0	0
TOTAL BENEFITS	4732	4756	4779	4803	4827	4851	4875	4899	4923	4948
PROJECT COSTS										
ENERGY USED (TONNES OF COAL)	1224	1224	1224	1224	1224	1224	1224	1224	1224	1224
PRICE ENERGY USED	1.39	1.40	1.40	1.41	1.41	1.41	1.42	1.42	1.42	1.43
VALUE ENERGY USED	1707	1711	1716	1720	1724	1729	1733	1737	1741	1746
ENG/DESIGN COST	0	0	0	0	0	0	0	0	0	0
DIRECT CAP COST	0	0	0	0	0	0	0	0	0	0
INDIRECT DVL COST	0	0	0	0	0	0	0	0	0	0
OPER & MAINT EXPENSE	1353	1353	1353	1353	1353	1353	1353	1353	1353	1353
OTHER OPER PRD CST	0	0	0	0	0	0	0	0	0	0
TOTAL COST	3060	3065	3069	3073	3077	3082	3086	3090	3095	3099
NET BENEFIT STREAM	1672	1691	1711	1730	1750	1769	1789	1809	1829	1849
CUMULATIVE NET BENEFITS	-6814	-5123	-3413	-1683	67	1836	3625	5434	7263	9112

SOCIAL VALUE ANALYSIS BY TIME PERIOD
BOILER PLANT REHABILITATION #5

All Monetary Values In: Rs(000)
Taxes And Interest Not Considered In This Analysis

TIME PERIOD	1q/1992	2q/1992	3q/1992	4q/1992	1q/1993	2q/1993	3q/1993	4q/1993	1q/1994	2q/1994
PROJECT BENEFITS										
ENERGY SAVED (TONNES OF OIL)	1196	1196	1196	1196	1196	1196	1196	1196	1196	1196
PRICE ENERGY SAVED	4.16	4.18	4.20	4.22	4.24	4.26	4.28	4.30	4.33	4.35
VALUE ENERGY SAVED	4972	4997	5022	5047	5072	5097	5122	5148	5173	5199
ENERGY SOLD ()	0	0	0	0	0	0	0	0	0	0
PRICE ENERGY SOLD	0.00	0.00	0.00	0.00	0.00	0.00	0.00	0.00	0.00	0.00
VALUE ENERGY SOLD	0	0	0	0	0	0	0	0	0	0
TOTAL BENEFITS	4972	4997	5022	5047	5072	5097	5122	5148	5173	5199
PROJECT COSTS										
ENERGY USED (TONNES OF COAL)	1224	1224	1224	1224	1224	1224	1224	1224	1224	1224
PRICE ENERGY USED	1.43	1.43	1.44	1.44	1.44	1.45	1.45	1.45	1.46	1.46
VALUE ENERGY USED	1750	1755	1759	1763	1768	1772	1776	1781	1785	1790
ENG/DESIGN COST	0	0	0	0	0	0	0	0	0	0
DIRECT CAP COST	0	0	0	0	0	0	0	0	0	0
INDIRECT DVL COST	0	0	0	0	0	0	0	0	0	0
OPER & MAINT EXPENSE	1353	1353	1353	1353	1353	1353	1353	1353	1353	1353
OTHER OPER PRD CST	0	0	0	0	0	0	0	0	0	0
TOTAL COST	3103	3108	3112	3116	3121	3125	3130	3134	3138	3143
NET BENEFIT STREAM	1869	1890	1910	1930	1951	1972	1993	2014	2035	2056
CUMULATIVE NET BENEFITS	10981	12871	14781	16711	18662	20634	22627	24641	26676	28732

FOREIGN CURRENCY REQUIREMENTS BY TIME PERIOD
BOILER PLANT REHABILITATION #5

All Monetary Values In: Rs(000)
Positive Values Indicate Use Of Foreign Currency
Negative Values Indicate Generation Of Foreign Currency

TIME PERIOD	3q/1984	4q/1984	1q/1985	2q/1985	3q/1985	4q/1985	1q/1986	2q/1986	3q/1986	4q/1986
VALUE ENERGY SAVED	0	0	0	0	0	0	-6104	-6280	-6460	-6646
VALUE ENERGY SOLD	0	0	0	0	0	0	0	0	0	0
ENG/DESIGN COST	288	540	553	755	580	1183	0	0	0	0
DIRECT CAP COST	4751	4398	4142	1953	1138	353	0	0	0	0
INDIRECT DVL COST	0	0	0	0	0	0	0	0	0	0
OPER & MAINT EXPENSE	0	0	0	0	0	0	745	785	805	826
ENERGY CONSUMED	0	0	0	0	0	0	1844	1893	1943	1994
OTHER OPER PRD CST	0	0	0	0	0	0	0	0	0	0
INTEREST PAYMENTS	0	107	214	318	381	425	464	464	464	464
NET FOREIGN CURRENCY REQUIRED	5039	5045	4909	3026	2099	1960	-3032	-3139	-3249	-3362
CUMULATIVE FOREIGN CURRENCY REQUIRED	5039	10084	14993	18019	20118	22078	19047	15908	12660	9297

FOREIGN CURRENCY REQUIREMENTS BY TIME PERIOD
BOILER PLANT REHABILITATION #5

All Monetary Values In: Rs(000)
Positive Values Indicate Use Of Foreign Currency
Negative Values Indicate Generation Of Foreign Currency

TIME PERIOD	1q/1987	2q/1987	3q/1987	4q/1987	1q/1988	2q/1988	3q/1988	4q/1988	1q/1989	2q/1989
VALUE ENERGY SAVED	-6837	-7033	-7235	-7443	-7657	-7877	-8104	-8337	-8576	-8823
VALUE ENERGY SOLD	0	0	0	0	0	0	0	0	0	0
ENG/DESIGN COST	0	0	0	0	0	0	0	0	0	0
DIRECT CAP COST	0	0	0	0	0	0	0	0	0	0
INDIRECT DVL COST	0	0	0	0	0	0	0	0	0	0
OPER & MAINT EXPENSE	847	869	892	915	939	963	988	1013	1040	1067
ENERGY CONSUMED	2047	2101	2157	2214	2272	2332	2394	2457	2522	2589
OTHER OPER PRJ CST	0	0	0	0	0	0	0	0	0	0
INTEREST PAYMENTS	464	456	447	439	430	420	411	401	390	380
NET FOREIGN CURRENCY REQUIRED	-3479	-3607	-3740	-3876	-4017	-4162	-4311	-4465	-4624	-4788
CUMULATIVE FOREIGN CURRENCY REQUIRED	5819	2211	-1529	-5405	-9422	-13584	-17896	-22361	-26985	-31772

236

FOREIGN CURRENCY REQUIREMENTS BY TIME PERIOD
BOILER PLANT REHABILITATION #5

All Monetary Values In: Rs(000)
Positive Values Indicate Use Of Foreign Currency
Negative Values Indicate Generation Of Foreign Currency

TIME PERIOD	3q/1989	4q/1989	1q/1990	2q/1990	3q/1990	4q/1990	1q/1991	2q/1991	3q/1991	4q/1991
VALUE ENERGY SAVED	-9076	-9337	-9605	-9881	-10165	-10457	-10758	-11067	-11385	-11712
VALUE ENERGY SOLD	0	0	0	0	0	0	0	0	0	0
ENG/DESIGN COST	0	0	0	0	0	0	0	0	0	0
DIRECT CAP COST	0	0	0	0	0	0	0	0	0	0
INDIRECT DVL COST	0	0	0	0	0	0	0	0	0	0
OPER & MAINT EXPENSE	1094	1123	1152	1182	1212	1244	1276	1309	1343	1377
ENERGY CONSUMED	2657	2727	2799	2873	2949	3027	3107	3190	3274	3360
OTHER OPER PRD CST	0	0	0	0	0	0	0	0	0	0
INTEREST PAYMENTS	369	357	346	333	321	308	294	280	266	251
NET FOREIGN CURRENCY REQUIRED	-4956	-5130	-5309	-5493	-5683	-5879	-6081	-6289	-6503	-6724
CUMULATIVE FOREIGN CURRENCY REQUIRED	-36728	-41858	-47167	-52660	-58343	-64222	-70303	-76591	-83095	-89819

231

FOREIGN CURRENCY REQUIREMENTS BY TIME PERIOD
BOILER PLANT REHABILITATION #5

All Monetary Values In: Rs(000)
Positive Values indicate Use Of Foreign Currency
Negative Values Indicate Generation Of Foreign Currency

TIME PERIOD	1q/1992	2q/1992	3q/1992	4q/1992	1q/1993	2q/1993	3q/1993	4q/1993	1q/1994	2q/1994
VALUE ENERGY SAVED	-12049	-12395	-12751	-13118	-13495	-13883	-14282	-14692	-15114	-15549
VALUE ENERGY SOLD	0	0	0	0	0	0	0	0	0	0
ENG/DESIGN COST	0	0	0	0	0	0	0	0	0	0
DIRECT CAP COST	0	0	0	0	0	0	0	0	0	0
INDIRECT DVL COST	0	0	0	0	0	0	0	0	0	0
OPER & MAINT EXPENSE	1413	1450	1487	1526	1565	1606	1647	1690	1734	1779
ENERGY CONSUMED	3449	3540	3634	3730	3829	3930	4034	4140	4250	4362
OTHER OPER PRD CST	0	0	0	0	0	0	0	0	0	0
INTEREST PAYMENTS	235	219	202	185	167	149	130	110	89	68
NET FOREIGN CURRENCY REQUIRED	-6952	-7186	-7428	-7677	-7934	-8198	-8471	-8752	-9041	-9339
CUMULATIVE FOREIGN CURRENCY REQUIRED	-96770	-103956	-111384	-119061	-126995	-135193	-143664	-152416	-161457	-170797

BACKGROUND

SLTC has experienced major difficulties in maintaining the key equipment; most of it is of Soviet or East European origin, and the manufacture of spares has ceased. Implementing a program to manufacture spares locally is time-consuming and difficult, as the drawings for most parts were not supplied, and local talent and facilities for fabricating most of the intricate spares are inadequate.

In view of the above, a committee of SLTC technical officers was appointed to examine the modernization requirements of the factory. In addition to examining the mechanical condition of the equipment, the committee also explored other relevant areas such as updating of technological processes, quality improvements, and the incorporation of more efficient manufacturing techniques. On the basis of its study, the committee submitted its recommendations to SLTC's board of directors.

The board approved the recommendations of the committee and instructed it to negotiate with the National Development Bank (NDB) to arrange for necessary financial assistance. A formal application was submitted to the Bank, which initiated a detailed study on the project in consultation with SLTC. During the discussions, the Bank indicated that a detailed market study was needed to assess the feasibility of the expansion program.

In the meantime, SLTC had engaged NIBM to carry out a comprehensive study of its activities and to formulate a corporate plan for the next 5 years. SLTC acted because it believed that its long-term survival and development in a highly competitive market economy depended on a well-thought-out strategy. An examination of the market position and expansion trends was included in this study.

Given the time required to detail the approach for implementing the expansion program, SLTC decided to plan the modernization program in three stages:

1. To immediately invest in machinery urgently required for the improvement of the engineering service sections and the new radial tire and motorcycle projects

2. To finalize the equipment required to improve the performance of units and aggregates servicing the entire product mix and the equipment required to enhance capacity in those size ranges that have already manifested a growth in demand; to invest in

equipment for conservation of energy; and to implement the building expansion program

3. To invest in other equipment after studying the report of B. F. Goodrich specialists and after obtaining demand projections from the market studies now in progress.

SLTC is holding discussions with the NDB to obtain funds for the first and second stages of the modernization program. The Bank has indicated its willingness to provide funds for equipment that has already been ordered and will be received within 90 days of granting loan facilities. Final details will be discussed with the chairman of the NDB at the end of this year.

Building Expansion Program

Justification

Owing to the expansion of the range of tire sizes manufactured by SLTC, and to diversification into other product lines, such as radial, motorcycle, and solid tires, the existing factory area is now too small. As a result, machinery cannot be installed according to a logical floor plan. Furthermore, it is not possible to store semi-finished products to allow identification by time of manufacture and consumption on a first in, first out basis.

Details of Expansion

The program to extend the available space by an additional 4,464 square meters has been approved.

The initial expansion project is estimated to cost about Rs.10.5 million, while Rs.14 million have been approved for the total expansion program.

Status

Discussions have been held with some of the state organizations, such as River Valleys Development Board and the State Engineering Corporation, to work out the details of the expansion program. Work was scheduled to begin in January 1984.

OBJECTIVES OF MODERNIZATION PROJECT

Stage 1

- To invest in machinery required to improve the efficiency of the Engineering Service Sections

- To purchase equipment for the radial tire project and the motorcycle project.

Status of Procurement of Machinery (see Exhibit F.1)

Stage 2

- To procure equipment required to improve the performance of the units and aggregates servicing the entire product mix and the equipment needed to enhance capacities in the size ranges experiencing growth in demand
- To invest in equipment for conservation of energy
- To implement the building expansion program.

List of Equipment — Modernization Program (see Exhibit F.2)

Stage 3

- To invest in equipment needed to complete the modernization program; the list of machinery given in exhibit F.3 is tentative and may be amended on the basis of:
  - NIBM's final recommendations on the corporate plan
  - the recommendations of B. F. Goodrich specialists.

Exhibit F.1

Status of Procurement of Machinery

Name of equipment	C&F value	Remarks
Car tire assembly machine	J.Y. 37,530,000 S.L.Rs.3,940,650.00	Purchased Installed and commissioned
Motorcycle tire assembly machine	J.Y. 18,335,000 S.L.Rs.1,925,175.00	Ordered E.T.A. -- January 1984
Motorcycle vulcanizing press	J.Y. 15,279,750 S.L.Rs.1,604,373.75	Ordered E.T.A. -- December 1983
Refrigerant air dryer	U.S. $42,185.50 S.L. Rs.1,041,475.62	Purchased Being installed
Feed pumps for second-cycle water	D.M. 11,229.00 S.L.Rs.103,980.54	Ordered
Tread stillages (10)	S.L.Rs.556,000.00	Ordered locally
Low tension feeders (5)	Estimated	Orders are being finalized
	Total: S.L.Rs.9,171,654.91	

Exhibit F.2

List of Equipment -- Modernization Program

List of equipment	CIF value
Weigh bridge	Rs.1.5 million
Motor for single mill unit	Rs.1.5 million
Bead unit auxiliaries	Rs.1.5 million
Bagomatic presses/passenger 42" (2)	Rs.13 million
Trimming machine for car tires	Rs.0.3 million
Tread aggregate auxiliaries	Rs.3 million
Feed pumps and pressure control unit for hot water	Rs.2 million
Air compressor (2)	Rs.3.7 million
Welding machine for mold repairs	Rs.0.5 million
List of equipment -- Energy conservation program	
Multifuel boiler	Rs.11 million
Incinerator	Rs.1 million
List of equipment -- Building expansion program	Rs.10.5 million
Total	**Rs.49.5 million**

Exhibit F.2 (continued)

Status Telex Quotations

Schedule of Procurement/Installation/Commissioning

			Completion
1.	NDB approval	-	1/1/1984
2.	Tender Board approval for implementation of project and call for quotations	-	1/2/1984
3.	Obtaining formal quotations for machinery	-	1/4/1984
4.	Processing quotations by SLTC	-	1/7/1984 (CE-2) (Supplies-1)
5.	Final Sender Board approval	-	15/8/1984
6.	New equipment ordering	-	1/9/1984
7.	Approval of new equipment	-	15/5/1985
8.	Installation of new machinery	-	15/7/1985
9.	Trial run and production	-	15/9/1985

Exhibit F.3

List of equipment	Tentative C&F value
Banbury mixers - 1	RS.15 million
Truck tire assembly machinery - 2	Rs.8 million
Band building machinery - 2	Rs.2 million
84" mills - 2	Rs.3 million
Blender system for mills - 1	Rs.1.5 million
B.O.M. press truck -1	Rs.8 million
Truck tire trimming machinery - 1	Rs.0.5 million
Total	**Rs.38 million**