ISN-39693

Introducing Coal-Water-Mix Fuels to the Philippines

Assessment of Project Feasibility

Volume IV

The CWM-Fuel Supply System

Report to the
National Economic and Development Authority
Republic of the Philippines
on behalf of the
National Power Corporation
Development Bank of the Philippines

Report by
Burns and Roe, Inc.
and
Development Sciences, Inc.
for
Office of Energy
U.S. Agency for International Development

April 1985

PN-AAS-318

INTRODUCING COAL-WATER MIX FUELS TO THE PHILIPPINES

Report to:

National Economic and Development Authority
Republic of the Philippines

Volume IV

The CWM-Fuel Supply System

March 25, 1985

Prepared by:

Development Sciences Inc.
P.O. Box 444
39 Pleasant Street
Sagamore, MA 02561
USA

and

Burns & Roe, Inc.
800 Kinderkamack Road
Oradell, NJ 07649

Under Contract to:

Office of Energy
U.S. Agency for International Development
Washington, D.C.

FINAL REPORT

Volume IV

THE CWM-FUEL SUPPLY SYSTEM

		Page #
1.0	SUMMARY	1
2.0	INTRODUCTION	3
3.0	MINING OF COAL	4
	Table 3-1 - Summary of Present and Future Coal Production and Costs for Semirara	5
3.1	Description of Mine Areas at Semirara	6
3.2	Unong Mine	7
	Table 3-2 - Investment at Unong Mine	10
	Table 3-3 - Operating Costs at Unong	11
3.3	Himalian Area	11
	Table 3-4 - Investment Costs at Himalian	14
	Table 3-5 - Operating Costs at Himalian	16
3.4	Panian Area	17
	Table 3-6 - Investment at Panian	20
	Table 3-7 - Operating Costs at Panian	20
3.5	Use of Malangas Coal	21
	Table 3-8 - Investment at Malangas	24
	Table 3-9 - Operating Costs at Malangas	24
3.6	Potential Future Mining Area at Malangas (Lalat)	25
	Table 3-10 - Investment at Lalat	28
	Table 3-11 - Operating Cost at Lalat	29
	Table 3-12 - Estimated Production and Costs for Clean Coal at Total Malangas Area	30
3.7	Review of Water Availability on Semirara	30

	Page #
4.0 PREPARATION OF CWM FUEL AT SEMIRARA	32
4.1 Proposed CWM Preparation Plant Location	32
4.2 Process Design Basis	32
Table 4-1 - Slurry Plant Location Analysis	33
4.3 Description of Proposed CWM Preparation Facility	34
Figure4-1- TheCoal Water Mix Preparation Plant on Semirara Island	35
Figure 4-2 - Proposed Layout of CWM Plant on Semirara Island	36
Table4-2- Design Specifications for the CWM Fuel Preparation Plant	37
4.4 Ancilliary Facilities	39
4.5 CWM Plant Development for a Sucat Station Conversion Program	40
Table 4-3 - Fuel Requirements and CWM Production Capability	41
Table 4-4 - Cost Estimate for a Three Train CWM Plant	42
Table 4-5 - CWM Plant Installation Costs	42
Table 4-6 - Operating Costs for CWM Plant	43
5.0 TRANSPORT OF CWM FUEL FROM SEMIRARA TO LUZON	44
5.1 The Transport Route	44
5.2 Transporting CWM from Semirara to Rockwell	45
5.3 Barge Transportation Costs	45
Table 5-1 - Costs of CWM Barge Transport	45
6.0 PIPELINE TRANSPORTATION OF CWM FUEL (Burns & Roe, Inc.)	46
6.1 Introduction	46
6.2 Overview of Slurry Pipeline Technology	46

		Page #
	Table 6-1 - Partial List of Slurry Pipelines	47
6.3	Description of Existing Pipelines	48
6.4	Evaluation of Pipelines for CWM Fuel	49
	Table 6-2 - CWM Fuel Pipeline Design Features: Batangas - Sucat	54
	Table 6-3 - CWM Fuel Pipeline Design Features: Rockwell - Sucat	54
6.5	Cost Estimates	55
	Figure 6-1 - Rockwell CWM Unloading and Transfer System	56
6.6	Summary of Findings	57
7.0	REVIEW OF VOLUME IV COST DATA	58

1.0 SUMMARY

This volume represents an overview of the coal system necessary to support the conversion of the Sucat Station to CWM fuel. It begins with the evaluation of the mineable resource at Semirara, continues with the preparation of the CWM fuel, and then concludes with the transport alternatives for delivery to the Sucat Station. Thus, this volume demonstrates that the coal is available, that a CWM plant is feasible, and that there are means for transporting the fuel to Sucat Station. As such, this volume is one of six volumes which make up the total report, "Introducing Coal Water Mix Fuels to the Philippines".

Volume I has established the nature of the indigenous coal resource by presenting available information on quality and quantity for coal areas of relevance to this project. Volume II reviews the research completed on preparing slurry fuels from various Philippine coal samples, testing their physical and chemical properties, and then burning them in a laboratory combustion system. Volume III includes the design conversions with cost estimates for the four units of Sucat Station, and Volume V presents the economic and financial aspects of the total project. Consequently, there remain the issues of coal mining, CWM preparation, and CWM transport; and the discussion of these issues is included in this fourth volume.

The major findings of this volume can be briefly summarized as follows.

- All of the known and established coal mining areas with substantial quantities of at least sub-bituminous C quality coal were reviewed to determine potential mining sites to meet CWM requirements for a total conversion of Sucat. This resulted in the selection of Semirara as a prime site with more than the required reserves. In addition, Malangas was established as a secondary site with the potential of providing blending coal, if technically and commercially feasible, to increase the heat content of the resulting CWM fuel.

- Three potential mine sites at Semirara including the existing mine at Unong, and proposed sites at Himalian and Panian were examined from a financial point-of-view to determine investment and capital costs for producing coal. These costs will be used as base numbers for estimating retrofit options at the Sucat Station.

- Water requirements for CWM fuel were determined and the water resources on Semirara were investigated to ensure adequate water supplies for a CWM preparation plant, anticipated to be located on Semirara. It was found that fresh water in ample quantities was available throughout the island.

- CWM production alternatives which would be appropriate to the design CWM fuel produced by BNL were evaluated to determine site location and preparation plant requirements. A proposed facility was designed and costed for Semirara Island.

- Transport alternatives between Semirara and Sucat were investigated to select potential alternatives for evaluation. Barge transport together with an overland pipeline were studied and costed to pre-

together with an overland pipeline were studied and costed to prepare transport combinations for the CWM fuel.

- Existing pipelines were evaluated to determine their capability to serve as carriers of CWM fuel. A plan for pipeline transport of CWM fuel was prepared and costed to serve the alternative retrofit scenarios for Sucat Station.

- Consequently, all steps from estimating coal resources, through mining, CWM fuel preparation, and transport have now been studied and required designs and costs prepared.

This volume on The CWM-Fuel Supply System and the others in this set provide direction for the production and use of CWM fuel in the Philippines. These volumes provide the background on all system elements of a proposed project which utilizes an indigenous, low BTU coal for the CWM retrofit of Sucat Station.

2.0 INTRODUCTION

Volume IV, "The CWM-Fuel Supply System" contains designs and recommendations for expansion of the relevant coal mines, preparation of the CWM fuel, and transport of the fuel from the preparation facility to Sucat Station. Based upon information in Volume I and in the following section of this volume, Section 3, the coal will be provided from the current and future mines on Semirara Island. Although mines elsewhere in the Philippines have as good or better quality coal, none can be in production as early and in quantities needed as the Unong and other mining areas of Semirara.

The next element of the overall system, CWM fuel preparation, is covered in Section 4. This plant will crush, grind, and prepare the coal for suspension in a water medium to facilitate transport, handling, and combustion in the boilers at Sucat. The CWM plant is proposed for a Semirara Island location where the coal, water, and some port facilities exist. The current design of the boiler conversion and the preparation plant is developed for the baseline slurry with the characteristics described in Section 4.2.

During the early, low volume, period of converting the Sucat Units 2 and 3, the prepared fuel will be shipped by marine vessels to Manila Bay, where it will be off-loaded at a pipeline terminal on the Pasig River at the location of the now idle Rockwell Station. The transport alternatives are presented in Section 5.

An existing 10-inch pipeline connecting Rockwell to Sucat can carry the initial volumes as described in Section 6. Later expansion of boiler conversions at Sucat may necessitate either an additional pipeline over the Rockwell right-of-way or the upgrading of an existing pipeline from Batangas to Sucat, based upon the Rockwell experience. The fuel will then be combusted in one or more converted steam generators at Sucat, as described in Volume III.

Section 7 of this report concludes with a review of the major cost data in this volume.

3.0 MINING OF COAL

Although coal mining in the Philippines has a long history, large scale mining is relatively new. It is only within the 1980's that domestic production has reached 1 million metric tons (MT) per year, due to the rapid expansion that begin early in the decade. By contrast, this proposed CWM project, with full conversion of the Sucat Station, will require close to 3 million MT per year. This project will require significant mine expansion at the time when other industries in the country are also considering shifting to coal. More information on the coal resource can be found in Volume I. Also, a 1985 report entitled "Technical Assistance in Coal Development", to be submitted to the USAID Mission in the Philippines by DSI will soon be available.

At this time, major attention for coal mining is on Semirara Island as the only possible source of 3 million tons per year in the near future. Minor attention is still on Malangas as a potential blending coal to increase the slurry's coal loading. Additional information on slurry composition can be found in Volume II.

This mining report was developed by assessing the mining technology and related costs for existing and proposed mines at Semirara and Malangas. All the existing and proposed mines under consideration as coal sources for CWM production were visited. The mining costs presented in this volume were developed from either consultant reports or best estimates based upon similar mines and experience. As indicated in the following sections; basic data on Unong are from the Austromineral Report of 1980, data for Himalian were produced by Dames and Moore in 1983, and data for Panian were developed by Austromineral in 1981. Detailed data and summaries of available information and cost estimates are presented in the following sections.

Table 3.1, "Summary of Present and Future Coal Production and Costs for Semirara," provides a data review for the operating mine at Unong and the two potential mines at Himalian and Panian. The table shows that Unong produces one million MT per year at a cost of $21.17 per MT, operating at about 35% of available time. One can estimate that production could go to 1.7 million MT/Yr if the bucket wheel excavators (BWE) were operated at 60% availability and additional trucks and shovels were employed.

It should be noted that this table, as well as the others which follow, is based upon best estimates for coal ready to be delivered in late 1984. As such, they are total "break even" costs and do not include profit. They are not the price a purchaser would have to pay.

The table also indicates that it appears more efficient to open the Himalian mine before the Panian mine as Himalian has lower costs, can be in production sooner, can produce more coal, has a decrease in coal costs after the limestone cap removal, and may have a less serious water problem. It should be noted, however, that the basic differences in the Himalian and Panian estimates can be due to the variation in estimating techniques of the two engineering companies, Dames and Moore for Himalian, and Austromineral for Panian. It would appear that the similarity in the nature of the

Table 3-1

SUMMARY OF PRESENT AND FUTURE COAL PRODUCTION AND COSTS FOR SEMIRARA

	Unong		Future Himalian			Future Panian		
	MT (000) Coal	Cost $/MT	MT (000) Coal	Investment $Million	Cost $/MT	MT (000) Coal	Investment $Million	Cost $/MT
1984	1,000	21.17	0	-	-	0	-	-
1985	1,700	21.17	0	48.2	-	0	92.4	-
1986	"	"	0	53.2	-	0	104.0	-
1987	"	"	500	17.5	65.3	20	34.8	-
1988	"	"	2,000	-	22.42	280	-	94.87
1989	"	"	"	-	22.42	600	-	50.21
1990	"	"	"	-	22.42	1,100	-	32.43
1991	"	"	"	-	22.42	1,700	-	24.93
1992	"	"	"	-	19.55	1,700	-	24.93
1993	"	"	"	-	"	"	-	"

Notes:

1. Costs for coal shown are for CWM plant location on Semirara. To obtain cost for FOB port, loaded on ship for export, add $2.00/MT.

2. Costs include depreciation and interest.

3. The 700,000 MT additional at Unong is obtained by operating at 60% availability of BWES rather than 35%.

4. The initial investment at Unong is estimated at $187,610,000, no major new investment is anticipated to expand production.

Sources:

Unong: Austromineral, June 1980
Himalian: Dames & Moore, May 1984
Panian: Austromineral, November 1981

deposits, the stripping ratios, haulage distances, etc. would indicate a similar investment and operating cost for both deposits at a similar production rate.

3.1 Description of Mine Areas at Semirara

Semirara, which is near the southern tip of Mindoro, is a small (13km x 4 km) island that contains about 40 percent of the known coal reserves, other than lignite, in the Philippine Islands. On the island there are three major coal fields identified as Unong, Himalian, and Panian and pictured in Volume I. In brief, their characteristics are as follows:

Unong This is the operating mine where there are 20.6 million metric tons of coal, 17.2 million recoverable, in three major seams up to 29 meters thick. They are being mined by a bucket wheel excavator system at a million MT/Yr rate. The overall stripping ratio is about 7.6 cubic meters per MT of coal. The coal has the following average grade:

Water	16-19%
Ash	16-19%
FC	26-29%
VM	35-41%
CV	8000-9000 Btu/lb
S	1.0%
HGI	40-50

Tests by Austromineral show that a simple upgrading of the coal in a crushing, heavy media separation (HMS), jig plant would reduce the ash from ± 18 percent to 8 percent, but with only a 66.5 percent recovery.

Himalian This undeveloped coal area is next to the Unong pit and located at a higher elevation. The area contains 60.0 million MT of reserves in 13 coal seams with 37.5 million MT mineable. The coal is of a quality similar to Unong, but with a bit more sulfur, 1.1 to 1.6%, and a higher stripping ratio of 11.3 cubic meters of waste/MT coal. The sulfur in this coal is about 65 percent organic, 30 percent pyrite, and 5 percent as sulfate. Sodium in ash content is about 0.35 percent. Washing tests by Dames and Moore show that a separation at 1.6 Specific Gravity (SG) would reduce the ash from 18 percent to 10 percent with 65 percent recovery.

Panian This is the third area on Semirara which has been explored and considered for development. Here, there are four major seams and seven minor ones down to 300 meters below sea level. All seams are below sea level, the topmost being about 30 meters thick. Total reserves are about 117 million metric tons, but a proposed mine within the area to produce 1.7 million metric tons/Yr would have 72.1 million metric tons of reserves, of which 45.8 million is recoverable. This plan would mine four major seams, 38 meters total coal.

The coal has an average quality as follows:

Water	14.0%
Ash	20.6%
VM	36.8%
FC	28.4%
CV	7819 BTU/lb
S	+1.5%
Sodium in ash	0.68%

The average stripping ratio for the Austromineral planned mine is 8.4:1 overall, but about 6:1 at the start.

Washing tests by Austromineral on Panian coal on an 11 kg sample, 7 cores composited, indicated that a crushing, sizing, and HMS plant making a separation at about 1.6 SG would reduce the ash from 16 percent to 9 percent with a 84 percent recovery.

3.2 Unong Mine

3.2.1 Geology, Exploration, Reserves and Quality

At Unong, the Semirara Coal Co. has an operating mine that is approaching its design size of 1.0 million MT/Yr of coal. The area was explored with 79 drill holes by three groups: Philippine Bureau of Mines, Vulcan Energy Co., and Austromineral. The information is reported in the June, 1980 Unong report by Austromineral.

Reserves in three seams, one of which is 29 meters thick, are as follows:

Proven	13.9 million MT
Probable	3.3 million MT
"Dirty" Coal	3.4 million MT
Total	20.6 million MT

Down to 150 meters below sea level, the extractable reserves are 17.2 million MT and the coal quality is sub-bituminous C with average grade as reported above.

Rainfall in the area averages 3,000 mm/Yr, in 3 to 4 months, and this quantity, together with the inflow into the pit requires pumping about 528,000/cubic meters/day or 96,000 gpm. This is accomplished through three groups of three bore holes each. Austromineral also reports 8-27 million cubic meters of groundwater to be pumped, 4,000-14,000 gpm. They estimate that 7.8 to 12.7 cubic meters of water (2060 to 3390 gallons) per MT of coal will be removed.

3.2.2 Mining Methods

At Unong, a continuous system of bucket wheel excavators (BWE) and conveyors was devised and is in operation. In their feasibility study, Austromineral considered many possible systems and concluded that the BWE-conveyor system was most appropriate. They now have 4 bucket wheels operating on 7 mining levels, mining both waste and coal, and moving the waste on movable conveyor belts to a dump area on the reef where it is spread. The coal is sent on belts to stockpile and shipping. There are 19,250 meters of conveyors and 2 dumping spreaders.

The mining parameters are as follows:

Coal Production	1.0 million MT/Yr
Overburden Stripping	8.7 million cubic meters/Yr
Shifts/day	3
Days/Yr	300
Specific Gravity (SG) Coal	1.3
S.G. Overburden (OB)	1.7-2.0
Maximum pit depth	-150m.(below sea level)
Maximum OB thickness	210m.
Bench height	33M
Pit slope	2/1

The BWE's are scheduled to produce the required removal of overburden and coal by operating 3,024 hours per year. This is only 39.5% of the hours in a year of 365 days, or 42.0% of the hours in a 300 day year. By operating more hours, for example, 5256 hours with a 60% availability, another 700,000 tons/year of coal could be produced. Equipment of this type can do this if properly maintained. Many mines operate similar equipment at an 80% availability.

3.2.3 Washing/Beneficiation

There is no washing plant at Unong now. Test work, however, has been done on a bulk sample from the "opening-up", first cut on the main 29 meter seam at Unong. It included sizing and washability studies on what was called a "dirty" coal. Data on the work are summarized as follows:

FEED: SAMPLE AS TAKEN

	As Rec'd	Air Dried	Water Free
Water	18.66%	9.82	-
Ash	21.38	23.62	26.1
V.M.	32.69	36.23	40.19
F.C.	27.37	30.33	33.71
S	.73		.90
BTU/lb	8135	8597	9531

WASHABILITY DATA: SIZED AND SINK-FLOATED

S.G.	+10mm Cumulative Wt%	+10mm Cumulative %Ash	-10+1mm Cumulative Wt%	-10+1mm Cumulative %Ash	-1mm Discard No Separation
Float: 1.25	0.6	3.5	-	-	
1.25 - 1.3	74.8	4.8	1.6	6.7	
1.3 - 1.4	83.2	8.8	43.7	8.1	
1.4 - 1.5	89.7	27.4	56.6	22.5	
1.5 - 1.6	92.2	39.9	65.9	39.1	
1.6 - 1.7	95.5	54.2	73.6	49.4	
1.7 - 1.8	99.6	66.1	86.0	60.0	
Sink 1.8	100.0	72.2	100.0	71.0	
		13.8		31.2	

These data show that if one could deslime at 1mm and throw away the -1mm fraction, the recovery would be 82.8% in a product that would contain 14.5% ash from a feed of 23.6% ash. If one goes further and sizes into two fractions, +10mm and -10 + 1mm and then separates those fractions in an HMS plant and jigs; the combined clean coal would be 66.6% of the feed with 8.2% ash.

Costs for this type of plant were estimated as follows: for a 150,000 T/Yr ROM plant to produce 100,000 T/Yr clean coal.

Investment	$3,500,000.
69 People operate plant	3 shifts.

OPERATING COSTS:

	$/MT Feed	$/MT Clean Coal
Operating Cost	0.83	1.25
Depreciation (20yrs)	1.16	1.74
Interest (6%)	1.39	2.08
	3.38	5.07

3.2.4 Production

The actual production rates at Unong are unavailable, but the plan proposed was as follows:

1980	60,000 MT
1981	100,000 MT
1982	200,000 MT

1983	300,000 MT
1984	1,000,000 MT

There are 557 employees at Unong with approximately 1800 in the total village.

3.2.5 Investment

The Unong investment as estimated in the Austromineral Report (1980) is given in Table 3-2.

Table 3.2

INVESTMENT AT UNONG MINE

	US$ Million	Life	$/Yr. Depreciation
Bucket Wheels (4)	26.21	20	1.31
Belt Conveyors	34.33	18	1.91
Aux. Equipment	9.30	8	1.16
Stockpile Equipment	3.81	20	0.19
Shiploader	0.98	20	0.05
Workshops	7.25	17	0.43
Spares, etc.	9.50	17	0.56
Drainage	2.82	10	0.28
Bldgs-civil work	8.65	17	0.51
Infrastructure	7.15	17	0.42
Power Plant (2 at 7.5 MW)	18.77	17	1.10
Management studies	11.02	17	0.65
Inter island Trans.	0.63	17	0.04
Assembly	2.36	12	0.20
TOTAL	142.78		8.81
Contingency & Interest during construction	44.83		
TOTAL	187.61		

3.2.6 Operating Cost

The operating costs for the Unong Mine have been estimated from Austromineral data on the basis of one million MT per year coal production. These values follow in Table 3-3, "Operating Costs at Unong".

Table 3-3

OPERATING COSTS AT UNONG

	US$/MT		
Labor	1.45		
Energy	0.67		
Fuel & Lubr.	0.79		
Maint. & Repair	1.87		
Reclamation	0.27		
Surface Damage	0.27		
Direct Subtotal		5.32	
Depreciation	8.81		
Interest	7.04		
Indirect Subtotal		15.85	
Total	$21.17		423.4P/MT

3.3 Himalian Area

3.3.1 Geology, Exploration, Reserves and Quality

Himalian is the potential mine site between Unong and Panian and was studied in 1983 by Dames & Moore. The occurrence includes a series of 13 coal seams which go into 29 splits or plys; 10 have been assessed as having mineable reserves. The seams dip about 15 degrees and vary in thickness from 2 to 8 meters. Twenty drill holes were put down to assess the deposit, and reserves were calculated as follows:

Total proven	60.5 million MT
Total mineable	37.5 million MT

RESERVES BY SEAMS (From Top Down.)

Seam	Million MT in Situ
A1A	3.449
A1B	5.951
B1R	.966
B1A	1.083
B2A	2.891
B3A	1.916
B4A	2.145
C1A	2.668
C2A	9.307
C3A	7.402
TOTAL	37.478

AVERAGE QUALITY HIMALIAN COALS
Air dried - from Summary Table in report

Moisture	19.7%	
VM	32.9%	
Ash	15.1%	
FC	32.3%	
S	0.7%	(can be 1.1--1.6%)
BTU/lb	8022	
Ash fusion temp.	1160-1220 deg. C	
Chlorine	.01 - 0.1%	
Sodium in ash	0.35% usually (can be higher)	
Forms of sulfur	62% organic	

3.3.2 Proposed Mining Plan

The nature of the occurrence at Himalian requires a mixture of hard rock techniques to remove a limestone capping for the first seven years, only four years after full production starts. This will be done by drilling and blasting, shovel loading, truck haulage to in-pit crushing, and conveying to waste.

For moving the softer Semirara unconsolidated overburden formation, bucket wheel excavators will be used continuously digging and moving materials out on a conveyor system. Coal will be mined with a continuous mining excavator loading into trucks for in-pit haulage to the coal conveyors tying into the existing Unong conveyors. The existing main haulage conveyors at Unong will have to be moved. This is considered in the calculations. Dames and Moore studied 5 different systems before accepting the system described above.

MINING PARAMETERS

Bench width	60 M
Bench height	15 M
Slope angle	40 degrees (70 degrees in limestone)
Overall slope - pit bottoms	22 degrees
Haul roads	30 Meter wide, 8% max grade
Overall stripping ratio	11.3 cubic meters/MT coal
Total overburden to move	424.25 million cubic meters in 20 yrs
Density of coal	1.45 T/cubic meter

Total personnel required:

Mine	231
Geology	15
Admin.	81
Total Services	351
TOTAL	678

MINING PARAMETERS (Continued)

Working days per year	350
Overburden	3-8 hour shift per day
Coal	1-8 hour shift per day

One maintenance shift per week on both overburden and coal.

3.3.3 Washing/Beneficiation

Only small samples of Himalian coal have been tested in the laboratory. Samples were compared for a simple sink-float separation with Unong coal as follows:

	Himalian		Unong	
	Cumulative Wt. %	Ash %	Cumulative Wt. %	Ash %
Float @ 1.4	57.2	7.0	54.1	5.7
1.4 - 1.6	65.5	9.9	65.3	8.2
1.6 - 1.8	73.6	14.4	72.4	12.0
1.8 - 2.0	85.0	21.4	80.8	17.4
Sink @ 2.0	100.0	30.0	100.0	29.4

These are very similar in nature and one would expect washing results on Himalian coal to be very much like those reported for Unong in the earlier section.

3.3.4 Proposed Production Schedule

YEAR	-3	-2	-1	1	2	3	4	5	6-15	16	17
Shovel OB Million cubic meters	9.0	9.0	9.0	9.0	9.0	9.0	9.0	-	-	-	-
BWE #1 OB	-	5.2	10.4	10.4	10.4	10.4	10.4	10.4	10.4	10.4	1.0
BWE #2 OB	-	2.6	10.4	10.4	10.4	10.4	10.4	10.4	10.4	10.4	1.0
Total OB	9.0	16.8	29.8	29.8	29.8	29.8	29.8	29.8	29.8	29.8	2.0
Coal Production Million MT			0.5	2.0	2.0	2.0	2.0	2.0	2.0	2.0	1.9

3.3.5 Investment Costs

An estimate of investment costs for 1983 $ by Dames and Moore follows in Table 3-4, "Investment Costs at Himalian", based upon a production of two million tons per year.

Table 3-4

INVESTMENT COSTS AT HIMALIAN

COAL EQUIPMENT

Item	Life	No.	US$Million Cost/Unit	US$Million Total Cost
27 cubic meters Elec. Shvls.	20 yrs.	1	4.13	4.13
170 Ton Trucks	30,000 hrs.	5	0.83	4.17
In Pit Crusher	20 yrs.	1	1.00	1.00
1000 Litre BWE	20 yrs.	2	4.91	9.82
Band Wagon	20 yrs.	2	1.096	2.18
Spreads & Tripper	20 yrs.	1	1.30	1.30
DB Drill	25,000 hrs.	1	1.06	1.06
650 mm Conveyor	-	2.3Km	$2000/MT	4.60
1000 mm Conveyor	-	3.6Km	3000/MT	10.80
1600 mm Conveyor	-	3.0Km	3700/MT	11.10
1200T/Hr Excavator	20 yrs.	1	1.24	1.24
85 Ton Trucks	20,000 hrs.	8	.556	4.44
7.6 cubic meter Hyd. Shvl.	30,000 hrs.	2	.802	1.60
5.0 cubic meter Hyd. Shvl.	20,000 hrs.	2	.620	1.24
750 KW Dozer	17,000 hrs.	3	.70	0.74
231 KW Dozer	17,000 hrs.	2	.228	0.46
149 KW FEL	10,000 hrs.	2	.131	0.76
186 KW Grader	15,000 hrs.	2	.252	0.50
Water Truck	25,000 hrs.	1	.406	0.41
Explosive Truck	25,000 hrs.	1	.406	0.41
Fuel & Lube Truck	25,000 hrs.	2	.406	0.82
Tire Truck	25,000 hrs.	1	.406	0.41
Tire Changer	20,000 hrs.	1	.205	0.21
Low Loader	20,000 hrs.	1	.200	0.20
Mobile Crane	20,000 hrs.	2	.180	0.36
Fork Lift	20,000 hrs.	2	.850	0.17
Ramps	10,000 hrs.	6	.050	0.30
Total Equipment				63.93

Infrastructure:

	US$Million
Power Plant	29.13
Office Workshop	8.33
Electrical Dist.	1.00
Diesel Gen. (Standby)	5.00
Housing	1.60
Relocate K-2 Belt	9.74
	54.80
Equipment	63.93
Total	118.73

Paid out in first three years to start mine.

Depreciation:

20 Year items $74.49 million or $3.72 million/Yr.
All others, 5 yr. $44.24 million or $8.85

$12.57 million/Yr
or 6.29/MT Coal

Interest: 10%/year on $118.73 million or $11.87 million/Yr
or $5.94/MT Coal

3.3.6 Operating Cost

The operating costs in 1983 $ for Himalian which follow in Table 3-5, are similarly based upon two million tons per year. They are shown for year four, the fourth year of production with all items on schedule.

3.3.7 Hydrology

Dames and Moore studied the Himalian water problem and found that the permeability of the water bearing sediments was highly variable.

Horizontal permeability 5 x 10 to 1 x 10 m/s
Vertical permeability is very low.

The annual recharge to the soft Semirara formations in the Himalian area is 700 gpm on a continuous basis. The recharge to the limestone is perhaps an order of magnitude larger. The water quality is good with very low dissolved solids.

Hydrologic Parameters - (Most likely case):

Permeability	= 5 x 10 m/s
Storage coefficient	= 0.05
Saturated thickness	= 300 M
Static water level	= 30 M
Transmissivity	= 1.6 x 10 sq. m/sec

Required dewatering:

5 years to level - 80m
10 years to level -140m
15 years to level -160m
20 years to level -190m

Number of wells:

Year 5	50
Year 15	70

Well spacing: 100m

Pumping rate at year 5: 210 liters/sec or 3300gpm

There is a need for permanent dewatering wells around the perimeter of the pit at 100 meters apart. The rate will increase to a maximum of 3300 gpm in year 5, then steadily decrease to about 2200 gpm in year 17. Since recharge is only 700 gpm the water table will drop and sea water may seep in during later stages of mining.

Table 3-5

OPERATING COSTS AT HIMALIAN

	US$/MT Coal
A. Overburden Removal	
Drilling & Blasting*	1.26
Shovel Operation*	0.13
Trucking*	1.82
Crushing*	0.10
BWE's & Wagons	0.62
Belt Conveyors	0.68
Spreaders	0.06
Total OB	4.67
B. Coal	
Loading	0.05
Conveyors	0.04
Trucks	0.23
Total Coal	0.32
C. General	
Site Vehicles	0.25
All Other Equipment	2.73
Mine Labor	0.30
Prof. Labor	0.07
D. Total Administration	0.73
E. Support Services	0.45
F. Outside Contractors	0.67
Subtotal	5.20
Total Direct Cost	$10.19

* These items are for initial four years.

Summary of total costs. First four years - full production.

Direct costs	$10.19/MT Coal
Depreciation	6.29/MT Coal
Interest	5.94/MT Coal
	$22.42/MT Coal

Years five through 20, without limestone to excavate.

Direct costs	$7.32
Depreciation	6.29
Interest	5.94
	$19.55

3.4 Panian Area

3.4.1 Geology, Exploration, Resources and Quality.

At Panian the coal seams occur in a flat anticline gently dipping South with major faulting on two sides. The total thickness of coal is 38 meters in 4 major seams. The exploration consisted of 49 drill holes with a 250 meter grid on the 250 hectares of area. There was a total of 12,837 meters of drilling. This work was done by Vulcan Energy Company in 1977. Based on these data, Austromineral made a report in 1979-1981 on the feasibility of mining at Panian.

Basic reserve calculations are as follows:

Total calculated	115 million MT
Proposed mine reserves =	72.1 million MT
Recoverable reserves =	45.8 million MT plus
	10-12 million at the end of Mining

Life of operation at 1.7 million MT/Yr is over 30 years. The general quality of the coal was shown earlier. The final mining level at Panian would be about 250 meters below sea level.

There is a major water problem at Panian which is discussed later. General seam thickness data are as follows:

Seam	Range Thickness	Av. Thickness
13	6.13 - 25.93 m	13.6 m*
15	2.41 - 10.13 m	6.3 m*
19	5.96 - 32.81 m	22.4 m*
12	1.30 - 16.60 m	9.6 m*
14	0.39 - 8.30 m	3.0 m**
17	0.28 - 4.87 m	2.6 m**
18	0.81 - 4.37 m	3.0 m**

28 seams total - 21 only lenses or thin carbonaceous bands.

* - Major seams
** - Minor seams

3.4.2 Proposed Mining Plan

Austromineral planned to mine Panian with a bucket wheel excavator system for both the overburden and the coal. The system included conveyor haulage of overburden waste to a dump site on the reef and coal haulage by conveyor to tie into the existing Unong conveyor with the storage and dock area. General mining parameters were determined to be the following:

Yearly production ROM	1.7 million MT
Use in own power plant	0.24 million MT
For sale	1.6 million MT

Overburden (OB) to move	12.0 million cubic meters/year
Shifts	3/day, 6 days/week
Days/year	300
Coal s.g.	1.3
OB s.g.	1.7 - 2.0

The overburden and interburden at Panian are very much unconsolidated or loosely consolidated sediments, sands, clays, etc. These can be readily dug with bucket wheels. A limestone capping does occur in some areas, but plans are included to move where required by drilling, blasting, shovel loading and truck haulage.

3.4.3 Washing/Beneficiation

Work was done on a sample of composited cores from 7 holes which were blended and wet screened at 0.5mm. The +0.5mm fraction was then sink-floated at various gravities. The data are summarized below:

Sizing:	Fraction			Cumulative		
	Wt. %	% Ash	% Water	Wt. %	% Ash	% Water
+0.5mm	96.7	15.7	10.2	96.7	18.7	10.2
-0.5mm	3.3	26.5	9.5	100.0	16.1	10.2
Sink-Float:						
Float 1.2	0.1	2.8	7.2	0.1	2.8	7.2
1.2 - 1.3	28.1	3.7	11.1	28.2	3.7	11.1
1.3 - 1.4	46.6	7.2	11.4	74.8	5.9	11.3
1.4 - 1.5	7.5	24.0	9.1	82.3	7.5	11.1
1.5 - 1.6	4.4	36.4	7.7	86.7	9.0	10.9
Sink 1.6	13.3	59.3	5.4	100.0	15.7	10.2

Overall Results: 83.8% of the coal can be recovered with 9% ash from a 16.1% ash feed by discarding the high ash -0.5mm (26.5% ash) and separating the +0.5mm at 1.6 SG in a jig-table plant.

3.4.4 Proposed Production Schedule

It was estimated that if started in January, 1985 production could be as follows:

	Coal	Waste in Million cubic meters	BWE #
1985	0 MT/YR	-	0
1986	0 MT/YR	-	0
1987	20,000 MT/YR	5.5	2
1988	280,000 MT/YR	12.2	1

Proposed Production Schedule (Continued)

1989	600,000 MT/YR	13.1	
1990	1,100,000 MT/YR	13.3	
1991	1,200,000 MT/YR	13.8	
1992	1,200,000 MT/YR	16.7	2
1994	1,300,000 MT/YR	15.0	1
1995	1,700,000 MT/YR	12.0	

Production could be increased by phasing in the bucket wheels faster, leading to full production by about 1990.

3.4.5 Investment

A total capital investment has been estimated for Panian and by Austromineral in 1981 $ follows in Table 3-6.

3.4.6 Operating Cost

The operating costs based on full production were estimated as shown in Table 3-7.

3.4.7 Mine-Associated Problems

At the proposed Panian site, all coal seams are below sea level, and in developing a mine there, one has to be concerned about sea water going into the pit as it deepens. There is also a large amount of groundwater and rainwater that will require pumping in order to keep the pit dry. This water can be used in CWM production.

Work by Austromineral in drilling and pumping tests, showed that in the Panian area the strata over the top coal seam have a hydraulic conductivity of 5 x 10 meters/sec which was 23 times higher than the same strata at the Unong pit. Also, the strata between the coal seams have a conductivity which is 77 times higher than the strata at Unong. In other words, the sedimentary strata at Panian are much more permeable, thus, allowing sea water to more easily enter the below-sea level pit.

Austromineral estimated the meteoric water to be about 1.0 million cubic meters per day or 18,000 gpm which would have to be pumped. There would also be 180 million cubic meters per year or 342 gpm of groundwater to be recovered. This would require 217 holes, each pumping 100 cubic meters per hour with 33 MW of pumping power. Austromineral concluded that further study of the potential hydrological problem at the Panian site was required. Another study done by Semirara engineers is said to have concluded that the problem at Panian would not be so serious; and indeed may be similar to the Unong mine. There, only a small sea water inflow has been noted, and ground and meteoric water control is not a severe problem or cost. In either case, a further study and assessment of this problem is essential.

Table 3-6

INVESTMENT AT PANIAN

	US$ Million
Bucket Wheel Excavators (6)	18.4
Hopper Cars, Belt Conveyors, Belt Wagons	72.9
Waste Spreaders	2.8
Auxiliary Equipment	9.9
Water - Groundwater Drainage Equipment	23.2
Meteoric Water Equipment	0.7
Stockpiling Equipment	2.5
Power Plant	35.6
Workshops	1.1
Spare Parts	3.6
Erection - Startup	11.7
Civic Work - Plants	2.7
- Wells	4.7
- Infrastructure	8.0
Inter Island Transport	2.7
Studies & Engineering	10.7
Contingencies	20.0
Total Capital Investment	$231.2

Table 3-7

OPERATING COSTS AT PANIAN

Direct	$/YR
Labor	2,534,000
Energy	5,645,000
Supplies	1,080,000
Maint. & repairs	4,627,000
Contract costs	5,040,000
Sub Total	18,976,000
Depreciation	10,779,000
Interest (11%)	12,670,000
Total Production Cost =	$42,375,000/Yr.

at 1,700,000 MT/YR = $24.93/MT or 498.5P/MT for CWM plant at Semirara

To ship out add $2.00/MT for ship loading; or cost = $26.93
F.O.B. Semirara loaded for shipment 538.6 P/MT

Another problem for Panian coal is the need to upgrade the quality for certain potential markets. This would require more and longer washability tests to verify what can be done to upgrade the quality and to design the requisite washing plant. Information already known indicates that an upgrading plan may produce a good quality coal, but at only a modest recovery, 80 to 85%. The 15 to 20 percent rejects, however, could be used at the power plants on Semirara, so they may not represent a complete loss.

3.5 Use of Malangas Coal

3.5.1 Geology, Exploration, Reserves and Quality.

Existing mines including Lalat are 50 km S.W. of Pagadian City, the capital of Zamboanga del Sur. Coal blocks CBS-41-H-480 and 44-I-361 are held by Malangas Coal Co. (MCC) which is a PNOC subsidiary. The highway access is 72 km on good to poor roads with rolling hills, tropical vegetation, and up to 400 m elevation. The area was explored by Philippine Bureau of Mines in 1955. The general geology consists of coal basins made up of sandstones, mudstones, coal, and pyroclastic material. There are generally 5 coal seams at MCC which are up to 2 meters thick with major faults making mining difficult. Over 100 holes were drilled to explore the general MCC area and production was started in ± 1975.

Reserves:	Million MT Total	Recoverable
Malangas Coal Co.	10.37	5.18
Little Bagiuo	2.2	1.1
Kauswagan	0.3	0.2
Inimaco (contractor)	Small	Small

Coal Quality: Generally low vol. Bituminous

	Air Dried USGS Analysis	Australian Analysis
Water	1.94	1.9
Ash	15.18	13.1
V.M.	19.63	19.7
F.C.	63.25	65.3
S.	0.49*	0.45
C.V. (BTU/lb)	12,909	13,044

* 96% Organic

3.5.2 Mining

These operating mines are underground with slope entries of 15-25% down from the surfaces which intersect the coal seams. The mine seams are excavated by hand operated longwall retreating systems and the coal is removed by chain face conveyors to chain cross conveyors to main belt conveyors out of the mine. The MCC mine has 700 men on 3 shifts for 6 days/week over 300 days/yr. Each of the two longwall faces of + 80 meters is now mined by 32 men operating 3 shifts/day for a total of 192 men who produce 623 ROM tons/day. The productivity is, thus, 3.27 MT/man/shift with an overall productiviity of 0.89 MT/M/S. They are now mining 1 seam (LC-1) which is 1.5-3.5 m thick. In the future they will mine a lower seam (L.A.) which is about 40 m below LC-1 with the same thickness.

The MCC mine has two major areas which are separated by a major fault: the Diplahan area and La Dicha area which is lower. There are the same seams in each area. The area, Little Bagiuo, is now in production with the same mining system on the LC-1 seam. There are presently about 170 men producing approximately 70 MT/day.

3.5.3 Washing/Beneficiation and Port Operation

All production from the MCC mine goes through a simple washing plant, including the coal, development and waste rock. The plant is designed for 100 MT/hr. and includes screening, hand picking, and jigging with single two compartment Baum Jig. The average reject in the plant for 1984 was 22.2%. The plant employs 23 men total for 3 shifts with an average wage of 54 P/day. The plant operates at a variable feed rate and, thus, may not be very efficient.

At the port there is a 18,000 ton stockpile with space to 60,000 MT. The coal is pushed by a dozer into a hopper and then onto a conveyor for shiploading at 300MT/hr. Vessels of the 5,000 and 9,500 ton size are used as PNOC coal carriers.

The production, by month, for all producing mines at Malangas is as follows:

	For 1984 ROM	Metric Tons Clean Coal
January	14,062	10,233
February	13,226	10,929
March	15,498	14,597
April	14,335	10,982
May	14,009	11,171
June	13,670	9,708
July	16,063	12,005
August	14,120	10,360
September	12,839	9,520
Total Thru September	127,822	99,505
Probable for year	170,429	132,673

Average % clean coal recovery = 77.8

The typical daily production, in MT by mine for October 1984 was as follows:

		MCC Mine Clean Coal	Little Bagiuo Not Cleaned	Contractor Inimaco Not Cleaned
October	1	219.3	63.7	-
	2	536.9	67.5	-
	3	344.2	77.8	-
	4	383.2	71.8	-
	5	335.7	61.9	-
	6	302.0	35.6	51.9
	7	83.9	10.7	129.8
	8	690.1	73.0	-
	9	318.1	68.8	-
	10	191.7	66.8	-
	11	121.8	111.2	35.7
	12	91.7	97.6	244.4
	13	402.2	126.9	219.1
	14	-	-	74.1
	15	312.9	66.8	-
	16	351.9	85.5	-
	17	297.8	40.2	304.1
	18	183.0	61.6	248.0
	19	471.2	66.2	-
	20	227.8	89.7	-
	21	9.4	22.0	-
	22	280.3	34.2	-
	23	250.9	31.4	-
	24	243.9	69.9	-
	25	206.7	79.7	-
	26	162.2	83.6	-
	27	218.8	47.4	-
	28	96.9	73.1	-
Cumulative for 28 days		7,361.3	1,784.8	1,307.9

3.5.5 Investment

These are operating mines and data on their original investment schedules, costs, etc. are not available. The investment and operating costs have, thus, been estimated by DST for purposes of this report from the mine designs for similar situations in 1982, and follow in Table 3-8, and 3-9.

Table 3-8

INVESTMENT AT MALANGAS

Imported	US$9,847,000*
Local Investment	6,373,000*
Total	$16,220,000

Depreciation - after full production
Years 3 - 20 $1,133,000/Yr.

3.5.6 Operating Cost

The following table, "Operating Costs at Malangas", includes an estimate by DSI of the total cost of operation.

Table 3-9

OPERATING COSTS AT MALANGAS

	US$/Yr.	136,000MT/Yr. Clean Coal
Labor	750,000	
Supplies - Machine Parts & Supplies	35,000	
Drill Repair Parts	16,000	
Timbers, Steel Roof Supports	75,000	
Miscellaneous Supplies	20,000	
Power 1,980,000 Kwhr/Yr @ .064	127,000	
Indirect Cost (15% labor & Supplies)	134,000	
Payroll Overhead (30% Labor Cost)	225,000	
Taxes & Insurance (2% Div)	60,000	
Total Direct Mine Cost	$1,442,000	
Depreciation	1,133,000	
Haulage to Malangas	82,000	(1.5 P/MT/km)
Ship Loading at Malangas	236,000	
Total Cost	$2,893,000	
		$21.27 Per MT
		425.4 P/MT

Exchange rate = 20P/$1

3.5.7 Comments about Malangas Mine and Operation.

The Malangas mine (MCC) has very difficult ground conditions and requires much repair work to keep the main and side entries open. The rock strength also is poor.

3.6 Potential Future Mining Area at Malangas (Lalat Coal Project)

3.6.1 Geology, Exploration, Reserves and Quality

Based upon the PNOC Report of August 1983, the Lalat project is in the Malangas region about 15 km from the MCC mine. It is a separate late Miocene coal basin about 1.3 km long with a total of 550 hectares. Near surface coal was first mined in the area by National Development Corp. from 1938-1941. They abandoned the area and Cebu Cement Corp. took over and mined small amounts in 1951 and then also abandoned the site. PNOC acquired control and has tried to explore and develop the area since ± 1978.

PNOC has block CBS 41-H-397 thru Malangas Coal Co. with a mining permit and block CBS 41-H-396 with an exploration contract. The structural basin is a syncline about 600 meters deep at the deepest point with 10 separate seams. Only 3 are considered as reserves and as mineable but one other may be mined. From the top down the four seams are H, E, B, A. The basin has major faulting on the east and west sides and subcrops on the north and south. The area has been explored with 96 drill holes. All reserves have been classed as proven or indicated and are as follows:

Total Resource: (4 seams)	
Proven or Measured	11.24 Million MT
Indicated	6.05 Million MT
	17.29 Million MT
(60% of these are in Seam B)	

Mining Reserves:

Those within proposed mine in 3 seams	8.63 Million MT
Recoverable reserves	7.33 Million MT
Clean Coal Recoverable	6.23 Million MT
Clean coal production as planned	306,000 MT/Yr
Life of mine in 3 major seams	21 Years
Life of mine if 4 seams are mined	27 Years

Coal Quality:

Very similar to MCC mine. Bituminous C in Rank.

Calorific Value (Air Dried)	11,700 - 12,100 BTU/lb
Ash	11.8 - 13.2%
Total S	Below 1%
HGI	36 - 57

Seam	Average Thickness	Maximum Thickness	RESERVES (Million MT) Measured	Indicated	Total
A	1.01M	3.48	1.77	.54	2.31
B	1.66	3.44	6.10	4.2	10.35
E	0.88	1.49	2.00	0.3	2.30
H	1.03	1.98	1.37	0.96	2.33
			11.24	6.05	17.29

3.6.2 Proposed Mining Method

Use two, five meter diameter concreted shafts to 560 meters, ± 35 meters apart for access to the deposit to intersect all seams. Shaft pillar left = 200 meters. From shafts, start with double access drifts at 1% up slope with one for production and one for ventilation on three major levels at elevations 250, 350 and 450 meters. From access drifts go with double conveyor and ventilation slopes at 25% grade into coal seams. In seams, start with intake and return crosscuts at 50 meter centers and retreat mine with hand-operated longwall faces about 80 meters long.

Development waste will be loaded by rocker shovel into 1-ton mine cars, pulled to shaft, and cars hoisted and dumped. Coal goes from longwall face by chain conveyor to cross conveyors to loading station in access drifts, onto rail cars hauled with battery locomotive to the shaft with cars hoisted to the surface. Longwall faces will be supported by hydraulic props and lock bars with hydraulic powered shield supports on seams over 1.5 m thick.

Ventilation will require two 250,000 cfm mine fans and ten to fifteen 5000 cfm secondary fans with air bags underground. Water will be in the mine and will require three, 1500 gpm multi-stage centrifugal pumps to remove. Power will come from the N.P.C. line in the area. It will require 38,800 kwh during production. Three, 750 kva diesels will be on standby and drilling air will require a 7,000 cfm compressor. The water needed for sprays, etc. in the mine will be from the Sibuquey River which is 1km away.

3.6.3 Washing/Beneficiation

It is planned that most of the coal mined will be of such quality as to be shipped as product. Some high ash coal may be mined from time to time and this would be trucked to the MCC washing plant and processed there; however, this is not clear at present. No washing plant is planned at Lalat.

3.6.4 Proposed Production

A production of 306,000 MT/Yr is planned from four, 80-meter longwall faces operating 3 shifts, 6 days per week for 300 days per year. These advance 1.5 meters per day. The manpower is 542 men underground (UG) and 137 on the surface for a total of 679. Hence the productivities are as follows:

Face Productivity	= 2.92 MT/Man Shift
Total U.G. Productivity	= 2.07 MT/Man Shift
Overall Productivity	= 1.56 MT/Man Shift

The planned development schedule is as follows:

		Coal Produced
1983	Start shaft construction	0
1984	Start shaft construction	0
1985	Finish shafts, mid 1985 Develope access drifts and cross cuts	0
1986	In seams dev. production	19,000 MT
1987	In seams dev. production	60,000 MT
1988	In seams start major prod.	128,000 MT
1989	Full production	306,000 MT

This schedule was developed in 1983 and has not been followed. If the company were to start very shortly, they could possibly be in production by 1989. The 560 meter shafts could be sunk simultaneously and finished in 1-1/2 years.

The Lalat Report Marketing section gives the PNOC estimated coal supply from the Malangas area as follows:

Thousand Metric Tons/Year

	MCC	Little Bagiuo	Ininaco	Lalat	Total
1983	225	45	10	-	280
1984	270	45	10	-	325
1985	285	45	10	-	340
1986	285	45	10	19	359
1987	300	45	10	60	415
1988	300	45	10	128	483
1989	300	45	10	312	667
1990	300	45	10	312	667
1990 - 2005					667

Those projections are optimistic since it was anticipated that in 1984 MCC would produce about 98,000 (not 270,000), Little Bagiuo 20,000 (not 45,000), and Ininaco about 18,000 for a total of 136,000 (not 325,000). DSI has made projections for total production as follows from all mines.

1984	136,000 MT Clean coal	
1985	150,000 MT Clean coal	
1986	224,000 MT Clean coal	
1987	284,000 MT Clean coal	
1988	325,000 MT Clean coal	Lalat comes on line

1989	530,000 MT Clean coal	Lalat in full production
1990	530,000 MT Clean coal	

3.6.5 Investment Costs:

Table 3-10 which follows, gives an estimate of total investment for Lalat based upon 1983 $ from the PNOC Report of August 1983.

Table 3-10

INVESTMENT AT LALAT

	Thousand US$	
	Imported $	Local Costs*
Development Costs:		
Site preparation	-	252.9
Surface facil & equip.	666.0	506.6
Shafts & equip	2,138.5	118.4
Primary dev. equip.	1,163.8	33.6
Coal block dev. equip.	876.0	-
Elec. power & distr.	1,436.4	272.7
Eng. & surveying	27.3	-
Camp housing	-	218.2
Camp power	-	824.2
Superintendence & Eng.	-	479.5
Consultants	2,300.0	-
Labor mine	-	1,932.1
Misc. labor	-	193.2
Fuel & lub.	-	84.0
Mining Works:		
Prod. & vent shaft	-	1,038.6
Primary devel.	-	872.7
Coal block prep.	-	360.0
Initial Production Phase:		
Surface facilities & equip.	45.5	127.4
Shaft equip & facilities	1,741.3	63.6
Production equip.	5,607.9	-
Camp & housing	-	327.3
Contingancy (15%)	2,400.4	1,155.7
Total	18,403.1	8,860.7
Grand Total	$27,263,800.	

* U.S. $ @ 11P/$ Rate

3.6.6 Operating Cost

The costs of operation, similarly have been estimated for Lalat and follow in Table 3-11. They are estimated on the basis of the production of "clean" coal at full operation.

Table 3-11

OPERATING COST AT LALAT

General & admin.	$799,500
Surface support	706,300
Production - coal mine	1,148,600
Mine development	726,600
Coal washing	40,300
Total Direct	$3,418,300
Interest (±6% Inv.)	1,691,700
Depreciation	1,782,600
Amortization	299,300
Sub Total	3,773,600
Haulage to port (22km)	918,000
Loading into vessel	112,000
Sub Total	1,630,000
TOTAL	$8,821,900
	$28.83/MT
	576.6P/MT @ 20/1 rate

3.6.7 Comments About Lalat Project.

Review of the data indicate that the method of access, the use of shafts, is appropriate and that, in general, the project is feasible.

Investment and operating costs are appropriate for this type of mine. Investment costs in the U.S. for new underground coal mines are approximately $50 per annual ton for large mechanized mines. In the Lalat mine the cost is $89 per annual ton for a smaller (1/3 the size) and deeper mine.

Since the general rock formations are the same at Lalat as at MCC one can anticipate the same heavy ground problems in drifts and crosscuts. Shaft entries properly constructed should not cause any problem in maintenance.

A summary of the combined costs from the PNOC report for Malangas and Lalat follow in Table 3-12, "Estimated Production and Costs for Clean Coal at Total Malangas Area".

Table 3-12

ESTIMATED PRODUCTION AND COSTS
FOR CLEAN COAL AT TOTAL MALANGAS AREA

Year	Production MT	Source	Investment Required US $Million	FOB Loaded Malangas US$/MT	Port P/MT
1984	136,000	Existing Mines	None-Operating Mines	21.27	425.4
1985	150,000	" "	"	21.27	425.4
1986	224,000		5.45	21.27	425.4
1987	284,000	Phase in Lalat	8.18	22.86	457.2
1988	325,000		10.90	23.62	472.4
1989	530,000	Full Operation All Areas	2.73	25.63	512.6
1990	530,000*	"	-	25.63	512.6
			$27.26		

* Continues until 2010.

NOTE: Above only applies if an immediate decision is made to proceed with Lalat and if planned changes in existing mines are carried out.

3.7 Review of Water Availability on Semirara

Investigation of water resources on the island shows that there is a substantial supply of fresh water in various aquifers, as well as a supply of meteoric water and localized brackish water. The water requirements for CWM production are identified in the next section on the description of the CWM preparation plant. At total conversion of Sucat with a major retrofit, for example, a maximum of 981 gpm of water is required, as shown in next section.

From the three potential mining areas on Semirara, there is potential for rates of pumping in excess of this target.

Unong: The operating mine is now pumping about 96,000 gpm of brackish water from 9 holes on the north edge of the pit. Water collected in sumps above sea level is considerable, but not measured. This water could be separately pumped and should be able to be kept fresh.

Himalian: To dewater the mine for operation would require, in the fifth year, 50 wells at 100 meters apart, pumping at a total rate of 3300 gpm. For the fifth through seventeenth year, the rate would drop to approximately 2200 gpm. The possibility of salt water intrusion, with time, always exists.

Panian: Austromineral which examined the site for mining feasibility, estimated that the meteoric water would require 18,000 gpm pumping, and that the ground water would require 342 gpm pumping.

The sediments at Semirara are, in general, saturated for about 330 meters, from 10 meters above sea level to 220 meters below. They are saturated with fresh water. There is, thus, evidence of a substantial water supply which may be a hindrance to mining, but in the case of CWM production, is an asset.

4.0 PREPARATION OF CWM FUEL AT SEMIRARA

4.1 Proposed CWM Preparation Plant Location

Two alternatives for location of the CWM Preparation Plant have been considered; Batangas and Semirara. Batangas was considered as a potential site since it presently serves as a terminal area for coal to meet Luzon power and industrial needs. Table 4-1, "Slurry Plant Location Analysis", shows the costs associated with these two locations.

At the present time, Semirara Island is the only site under consideration. Continuing with the present operating procedures, the as-mined coal on Semirara will be carried across the island by overland conveyor to a stockpiling area approximately 500 yards from the coal loading port facilities. The conveyor system is currently designed to move the as-mined coal from the mine site, either to the stock-piling area or to be loaded directly onto ships, individually or as a combined flow.

The proposed location for the CWM preparation facility is in the middle of an extensive flat graded area on the north side of the ship loading conveyor. At this location, as-mined coal can be recovered from the ship loading conveyor and directed to a short-term (3-6 days) CWM plant raw coal storage area adjacent to the CWM preparation facility. Alternatively, as-mined coal can be trucked from the stockpile area, or moved by a new belt conveyor, to the short-term CWM plant storage area.

4.2 Process Design Basis

There are two practical approaches to the design of a CWM preparation plant, with or without coal benefication:

- Without Coal Beneficiation

  Under this approach, as-mined coal would be reduced to a size range of 2" or smaller in a crusher, and then fed directly into a wet ball mill for milling to a specified CWM grain size distribution. Specific quantities of water and additives would then be mixed in at the ball mill exit sump to meet CWM fuel specifications.

- With Coal Beneficiation

  Following this approach, beneficiation would be the first step in the CWM preparation process. The as-mined coal would be reduced to a CWM grain size distribution in two stages of milling, primary and secondary, with a screening step in between. This would be followed by a beneficiation stage including two steps of roughers and cleaners to produce a final concentrate which would be separated in a dry condition using drum filter dryers. Finally, the dried concentrate fuel would be mixed with defoamers, dispersant, and stabilizers to produce a specific commercial CWM fuel.

Table 4-1

SLURRY PLANT LOCATION ANALYSIS

	Slurry Plant Location Batangas	Semirara
Transportation, Coal to CWM Plant:	$ 9.00/MT	$ 0.75/MT
Sucat No. 2 Minor, 543 x 10 MT/yr	4.9 mm*/yr	0.4 mm/yr
Sucat No. 2 Major, 660 x 10 MT/yr	5.9 mm/yr	0.5 mm/yr
Transportation, Add'l. Coal for Energy to CWM Plant:		
Sucat No. 2 Minor, 27 x 10 MT/yr	0.24 mm/yr	0.02 mm/yr
Sucat No. 2 Major, 33 x 10 MT/yr	0.30 mm/yr	0.03 mm/yr
CWM Transportation to Rockwell:	4.50/MT	7.60/MT
Sucat No. 2 Minor, 820 x 10 MT/yr	3.7 mm/yr	6.7 mm/yr
Sucat No. 2 Major, 1010 x 10 MT/yr	4.6 mm/yr	7.7 mm/yr
Total Transportation Costs:		
Sucat No. 2 Minor	8.84 mm/yr	6.62 mm/yr
Sucat No. 2 Major	10.80 mm/yr	8.23 mm/yr
Additional Annual Transportation Costs When CWM Plant Located on Batangas:		
Sucat No. 2 Minor Changes	2.22 mm/yr	
Sucat No. 2 Major Changes	2.57 mm/yr	
Coal Handling Facility at Batangas (not required at Semirara):		
Investment Cost, Materials & Construction	$20,000,000	

* mm = million

NOTES:

1. The above figures do not include losses due to coal handling and weathering.

2. The coal storage requirements with the CWM plant at Batangas would be an order of magnitude greater than the 3 days minimum allowed for Semirara, where the general mine storage is readily available.

3. The availability of mix water has not been investigated in the Batangas area, but it is known that a supply line of some number of kilometers in length, passing through a populated area, would be required.

4. The above figures assume the completion of the projected Batangas Coal Port, and that an area therein, or adjacent to, will be available for the CWM plant.

5. It is to be expected that the cost of property on Semirara will be substantially less than that at Batangas.

6. Off specification product CWM can be easily, and safely, disposed of on Semirara, whereas at Batangas, there may be a need to allow additional equipment for recovery.

There is, in addition, the opportunity of installing a beneficiation process at the mine which is not directly associated with the CWM preparation plant. This could include a conventional coal washing plant to produce an upgraded coal product. This product would then be used to produce the commercial CWM fuel by fine grinding and addition of water and reagents. Waste rejects from the beneficiation process could be used as fuel for the on-site power plant.

This study has not evaluated crushing the as-mined Semirara coal and submitting it to a water wash so that cleaned and sized coal could be fed to the CWM preparation plant. Nonetheless, considering the potential improvement in CWM loading, it is suggested that further washability tests be performed early in the Optimization Phase of this project. Experimentation with different grind sizes and various processing fluids (heavy medium and flotation) is required in order to determine whether Semirara coal can be beneficiated economically, and, if so, what is the most appropriate process.

When CWM preparation and beneficiation are combined in one processing plant as described above, a significant increase in plant cost results and the amount of as-mined coal fed to the plant to replace cleaning losses also increases. Furthermore, the efficiency of coal recovery is difficult to predict for a specific coal, particularly a coal with Semirara's characteristics; and the extent of recovery will vary with the degree of cleaning achieved as well as the efficiency of "coal fines" recovery equipment included in the plant.

The design specifications for a CWM fuel preparation plant that is capable of producing CWM in accordance with the baseline fuel (50% Semirara coal), with or without additives, and in quantity sufficient to supply fuel for minor and major modifications of Sucat Station Unit No. 2, are presented in Table 4-2, "Design Specifications for the CWM Fuel Preparation Plant". A description of the preparation and selection of this fuel is presented in Volume II and the boiler conversion requirements can be found in Volume III.

4.3 Description of Proposed CWM Preparation Facility

Figure 4-1 contains a proposed layout of the CWM plant for the Unit 2 conversion, and Figure 4-2, a CWM plant process flow diagram and material balance based upon the design specifications in Table 4-2. A major factor affecting CWM fuel preparation plants is that they are limited in size by the practical dimensions of the ball mill that pulverizes the coal to the desired conditions. Following manufacturer's recommendations, a practical mill size with a 12 foot diameter has been selected. Approximately 25 US tons of moisture-free coal per hour is the capacity of this mill. Therefore, as larger quantities of fuel are required, multiple trains of equipment must be installed.

The estimates include three milling trains in order to satisfy the fuel requirements of the Sucat 2 unit under the minor conversion scenario (A), and eleven trains for the facility if all four Sucat units are converted under the major conversion scenario (D). These estimates are based on an

Table 4-2

DESIGN SPECIFICATIONS FOR THE CWM FUEL PREPARATION PLANT

I. Description of Raw Material:

- As-mined Semirara Coal

Water	24%
Ash	13.64%
Volatile Matter	32.56%
Fixed Carbon	29.80%
H.H.V.	7507 Btu/lb as is
Hardgrove Index	40-45

II. Production Requirements:

- Basis of Design for Scenario A - Sucat 2 with Minor modifications operated at full derated capacity:

  Boiler Efficiency, 74% Load, 60% TMCR (Turbine Maximum Continuous Rating)

  CWM Product: 50% coal/50% water (73.2 lb/cu. ft.)
  1000 cp @ 100 inverse seconds

- As-mined Coal Charge Requirement:

  82.6 metric tons/hour (90 US tons/hour)

- Milling Capacity (metric tons, dry coal/hour):

As-mined coal charge	82.6 MT/h
Contained water (24%)	19.8 MT/h
Dry coal milled charge	62.8 MT/h

- Additional Process Water:

  62.8 MT/h - 19.8 MT/hr = 43 MT/hr (43 m /h)
  (total water) (water in coal) or 190 gal. per minute

- Additive:

  With or without additives
  (Does not alter basic equipment design)

- CWM Production for 60% TMCR Load:

  125.5 MT/h or 672 Bbls/h (138 US tons/hour)

III. CWM Plant Maximum Design Data:

- Capacity:

  Three mills @ 23 MT/h (dry coal) = 69 MT/hr x 2 = 138 MT/h CWM (152 US t/h)

  138 metric tons/hour (8.26 Million Btu/MT)
  152 US tons/hour (7.50 Million Btu/US t)
  740 Bbls./hour (1.154 Million Btu/Bbl)

- Water Requirements:

  138/2 = 69 MT/hr - Total Water
  69 x .24 = 21.8 MT/hr - Water Contained in As-Mined Coal
  .76
  47 MT/hr (208gal/min) - Additional Water Requirement

Figure 4-1

The Coal-Water Mix Preparation Plant on Semirara Island

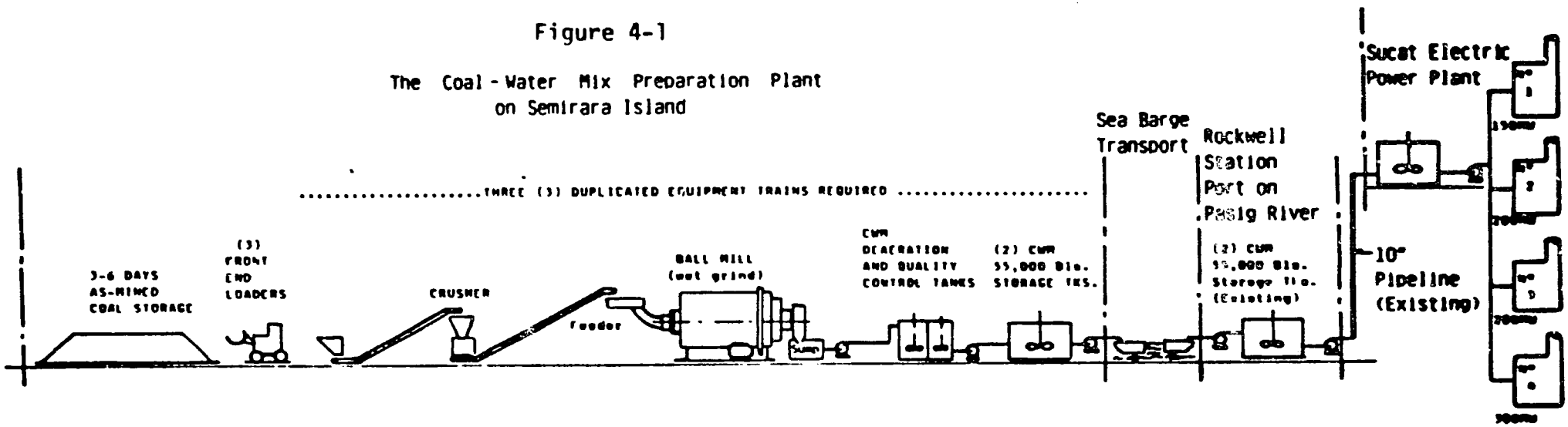

		AS-MINED COAL FEED TO CWM PLANT						BALL MILL CHARGE				MILL TRAINS REQ'D.	CWM PRODUCTION							SHIPMENTS Three day intervals	
		Metric Tons			US Tons			Dry coal	Abs. Water	Added Water			Metric Tons			US Tons			Grls		
		hr	day	yr×10³	hr	day	yr×10³	mt/h	mt/h	mt/h	gpm		hr	day	yr×10⁶	hr	day	yr×10⁶	/day	mtn	Barrels
CWM Plant One Train Des. Cap.		30.3	727	265	33.3	799	291	23.0	7.3	16	69	1	46	1110	0.403	51	1210	0.443	6490		
Sucat 2/3	100%	82.5	1980	723	90.8	2180	795	62.7	19.8	43	189	2.72	125	3000	1.100	138	3300	1.205	16180	9500	60300
Min.Chgs.	75%	61.9	1490	543	68.1	1630	597	47.0	14.9	32	141	2.04	94	2260	0.820	103	2480	0.905	12100	6800	36300
Sucat 2/3	100%	101	2410	880	110.6	2650	969	76.0	24.0	52	228	3.30	152	3650	1.330	167	4010	1.470	19600	11000	58000
Maj.Chgs.	75%	76	1810	660	83.0	1990	727	57.8	18.2	40	174	2.51	116	2770	1.010	128	3060	1.120	14900	8300	47700
Sucat 4	100%	124	2970	1080	136.0	3270	1190	94.2	29.8	64	284	4.09	188	4520	1.650	207	4970	1.810	24200	13600	72600
Min.Chgs.	75%	93	2250	814	102.0	2450	895	70.6	22.3	48	212	3.07	141	3390	1.240	155	3720	1.360	18200	10200	54600
Sucat 4	100%	151	3620	1320	166.0	3980	1450	115.0	36.2	79	347	5	230	5520	2.010	253	6070	2.210	29600	16600	88500
Maj.Chgs.	75%	113	2720	990	124.0	2990	1090	85.9	27.1	59	259	3.73	172	4120	1.500	189	4540	1.650	22100	12400	66300
Sucat 1	100%	65	1560	572	71.8	1720	629	49.6	15.7	34	149	2.15	99	2380	0.870	109	2618	0.956	12800	7100	38400
Min.Chgs.	75%	49	1170	430	53.9	1290	472	37.2	11.8	25	112	1.62	74	1790	0.650	81	1950	0.713	9600	5400	28800
Sucat 1	100%	76	1820	663	83.2	2000	729	57.5	18.1	39	173	2.50	115	2760	1.000	127	3050	1.110	14800	8300	44400
Maj. Chgs.	75%	57	1360	497	62.4	1500	547	43.1	13.6	30	130	1.89	86	2070	0.760	95	2270	0.830	11100	6200	33300
All Units	100%	354	8500	3100	390	9360	3420	269	85	184	810	11.7	530	12900	6.710	592	14250	5.180	69200	38700	208000
Min.Chgs.	75%	266	6380	2330	292	7010	2560	202	64	138	607	8.9	404	9700	3.540	444	10700	3.890	52000	29100	156000
All Units	100%	427	10300	3765	470	11300	4130	325	102	223	981	14.1	640	15400	5.890	715	17200	6.280	83700	46800	251000
Maj.Chgs.	75%	319	7700	2810	352	8450	3080	245	77	168	739	10.6	490	11700	4.290	539	12900	4.720	63000	35600	188000

CWM PLANT

PROCESS FLOW DIAGRAM and MATERIAL BALANCE

DSI DEVELOPMENT SCIENCES INC.
FEBRUARY 1985

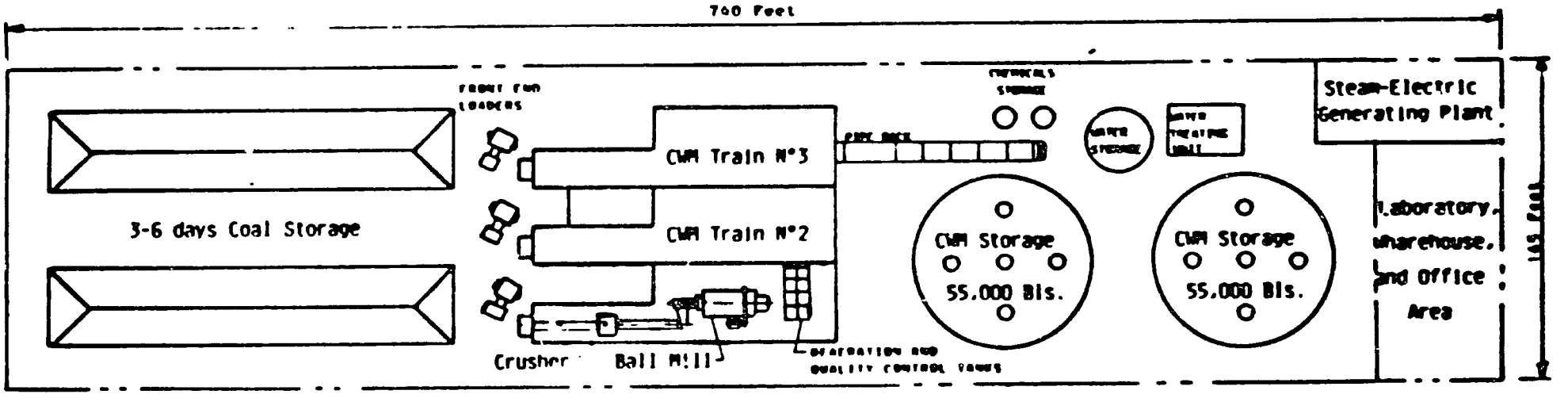

Semirara Coal Co.
Mine and Coal Storage Area

Loading Pier for
As-mined Coal

Commercial Pier for
Chemicals and other
material receiving

Figure 4-2

PROPOSED
LAYOUT OF CWM PLANT
SEMIRARA ISLAND, PHILIPPINES

DSI Development Services Inc.
February 1989

expected station loading of 75%; a station loading of 100% with major conversion, on the other hand, could require as many as 15 trains.

In the proposed plant, as-mined coal is delivered from coal storage piles to an individual milling train using a wheel-mounted, front-end loader. This method of coal transfer is proposed because in the past it has been found most convenient over short distances. It is also presently being successfully used to unload barges at the Batangas temporary coal port.

It is expected that the front-end loaders will keep feed hoppers adequately supplied with as-mined coal; and the conveyors, with weighing apparatus, will remove measured quantities of coal from the hoppers and deliver it to a crusher. The crushed, sized (2" and smaller), coal as fed into a mill feeder will be used to maintain a fine control over the charge to the ball mill. Water will then be put into the process at this point in slightly lesser quantities than required in the final CWM fuel. Water fed at this point in the process will assist, by flushing, the flow of coal into the mill proper. Additives, if they are required, may be added either at the mill inlet or directly after the ball mill into the mill sump.

The proposed milling operation is expected to be achieved in a single pass through the wet ball mill. The desired grind size distribution will be obtained by adjusting the mill speed and the time of residence of the coal in the mill. Under these circumstances, the largest practical mill size has been selected:

Mill diameter	12 feet
Mill length	25 feet
Motor driver	1750 horsepower

Under normal conditions, the proposed mill will reduce approximately 23 metric tons per hour (dry coal basis) Semirara coal from 2" and smaller size to 80% through 200 mesh with maximum size not greater than 300 microns, in accordance with the Brookhaven Laboratories prepared CWM fuel specification.

The CWM fuel will outflow from the wet ball mill into a collection sump, and be pumped into a number of intermediate product storage tanks, all of which are provided with agitation devices. The tanks will be sized to hold a convenient batch quantity to allow time for deaeration and quality control. Stabilizer, additional water, or other chemicals may be introduced into the mill sump or the intermediate storage tanks to adjust the chemistry of the mixture to CWM product specifications.

When the CWM fuel in the intermediate product storage tank is sufficiently deaerated, and determined to be within specifications, it will be transferred to bulk storage in preparation for shipment. Provisions will also be made to accumulate specification product in storage tanks sized for a regular scheduled shipment by barge or ship. This process will facilitate gauging and transfer operations. Two 55,000 Bbl tanks are provided for this service, one accumulating product while the other services a scheduled shipment, in compliance with requirements for the Sucat 2 conversion. Additional tankage would be necessary as the CWM preparation facility expands.

4.4 Ancillary Facilities

Additional ancillary facilities will also be required for:

- Well water treating and storage
- Steam and electric power generation and distribution
- Plant and instrument air systems
- Transfer and storage of chemicals
- Barges and ships loading
- Laboratories and offices, and maintenance

4.4.1 Well Water Treating and Storage

At the present time, fresh water for mining operation needs is drawn from a spring with the capability of providing 30 cubic meters per minute, of which only half this amount is being used today. In addition, three wells have been drilled and tested to a capacity of 7.5 cubic meters/min., but are not being utilized.

Several other spring sources have been found at higher elevations, and geological studies indicate an abundance of fresh water exists on the island. The extent of treatment of the water from these sources will vary according to its use. Treated water will be required for the steam generators, drinking, and laboratory requirements. On the other hand, no treatment is expected to be required for the CWM mix water. Water storage tanks will be necessary for both raw water and treated water.

4.4.2 Steam and Electric Power Generation and Distribution

Two coal-fired steam electric power generating units will be required along with a distribution system that is compatible with the existing system for the mining operation. Condenser cooling will be accomplished by the most economical means.

4.4.3 Plant and Instrument Air Systems

Dual non-lubricated cylinder type air compressors will provide 100 psig plant air and 40 psig dried air for instruments.

4.4.4 Transfer and Storage of Chemicals

A commercial pier already exists on Semirara in front of the coal loading pier. It was used to receive the equipment for the original mine development and is still operating to receive supplies. It is expected that all chemicals will arrive through this port facility and be trucked to the CWM plant area.

4.4.5 Barge and Ship Loading

A single loading arm station will be sufficient to handle the fuel quantities required for the minor conversion scenario for Sucat 2. This loading station could be located either at the end of the present coal loading pier, or at the small commercial pier. The loading line should be sloped at one end and be provided with washing out facilities.

4.4.6 Laboratories, Offices and Maintenance Buildings

It is expected that ancillary facilities for laboratories, offices, and maintenance can be arranged in a single building that is sized in accordance with the requirements of management and the selected equipment supplier's recommendations.

4.5 CWM Plant Development for a Sucat Station Conversion Program

Four independent steam turbine generating units are presently installed at the Sucat station. Details of these units, and their conversion possibilities, are presented in Volume III. The proposed Sucat individual unit conversion program has been divided into two stages: minor changes, representing minimum cost of conversion; and major changes, representing an increased capacity condition at a reasonable, higher cost. Sucat 2, as the most appropriate for initial conversion, has been selected to be converted first, followed by Units 3, 4, and 1.

4.5.1 CWM Plant Production to Meet Fuel Requirements

For the purpose of this report four stages of station conversion have been selected for detailed study:

A. Unit 2 with Minor retrofit
B. Unit 2 with Major retrofit
C. All four units with Minor retrofit
D. All four units with Major retrofit

Table 4-3 compares Sucat fuel requirements for 100% and 75% load factors with the CWM plant production capabilities. While 100% load factors are not possible over long periods, there may be short periods of such use so the 100% load is simply provided to indicate a maximum range.

Table 4-3

FUEL REQUIREMENTS AND CWM PRODUCTION CAPABILITY

Conversion Scenario	Fuel Requirements (MT/hr) 100% Load Dry Coal	100% Load CWM	75% Load Dry Coal	75% Load CWM	CWM Plant Capability (MT/hr) No. of Mill Trains	CWM Fuel Capacity
A.	62.7	125.6	47.0	94.0	3	138
B.	76.0	152.0	57.8	115.6	3	138
C.	269.0	538.0	202.0	404.0	9	405
D.	325.0	650.0	245.0	490.0	11	506

The three-train CWM plant adequately satisfies the fuel requirements for both the minor and major conversion scenarios for Sucat 2 (Scenarios A & B). Sufficient over capacity should be available to accommodate initial operating problems without affecting fuel availability. Although the nine and eleven trains that are selected for the major conversion scenarios (C & D) barely meet the expected fuel requirements at 75% station loading, these selections are being used in this feasibility study for the following reasons:

- The coal analysis specified as a basis for this study was a conservative selection. As Semirara mining operations gain experience, the coal quality is expected to improve, and this improvement will result in a higher quality CWM (more Btu/lb) from the initial equipment.

- It has been recommended that coal washability testing be performed before final design of the initial CWM installation elsewhere in this report. If those tests prove positive, CWM quality realized from the presently specified preparation equipment will improve.

As a result, it is expected that the specified preparation plant will be capable of meeting the CWM fuel requirements for the Sucat Station initial conversion program and introducing CWM fuel to the Philippines.

4.5.2 CWM Plant Capital Cost Estimates

The CWM preparation plant which is designed to satisfy the fuel requirements of the minimum conversion program for Sucat 2 will require three maximum mill size production trains operating in parallel. Economy of scale is not applicable to this type of processing plant; therefore, any increases in capacity will be directly proportional to the initial plant cost. For similar reasons, operating costs are assumed proportional to plant capacity.

4.5.3 CWM Plant Capital Costs

The cost of a CWM preparation plant consisting of three milling trains is presented in Table 4-4. Each train is capable of processing over 20 MT of dry coal per hour following the production requirements of Table 4-2.

Table 4-4

COST ESTIMATE FOR THREE TRAIN CWM PLANT

Item	Foreign Exchange ($000)	Local Currency ($000)
Civil Work and Buildings	570	1800
Equipment and Materials	7950	940
Ancillary Systems	5290	160
Engineering	645	894
Construction	390	4570
	$ 14845	$ 8364

Total installed direct cost $ 23,209,000

Table 4-5 presents CWM plant total installed costs (TIC) to fuel each of the four scenarios; meeting 100% and 75% loading conditions.

Table 4-5

CWM PLANT INSTALLATION COSTS

	CWM Consumption (MT/M)		Calculated No. of trains		Actual No. of Trains		Installation Costs ($Million)	
Scenario	100% Load	75% Load	100% Load	75% Load	100% Load	75% Load	100% Load	75% Load
A.	125.6	94.0	2.7	2.03	3	3	23.2	23.2
B.	152.0	115.6	3.3	2.5	3	3	23.2	23.2
C.	538.0	404.0	11.7	8.8	12	9	75.4	58.0
D.	650.0	490.0	14.3	10.7	14	11	87.0	69.6

4.5.4 CWM Plant Operating Costs

Presently, the available operating cost data are based upon US coal qualities and labor. Philippine coals, however, are high moisture containing, particularly Semirara production, whereas US coals are low in moisture.

These report estimates, therefore, are based on a dry coal condition for Philippine coal. In addition, experience with previous Philippine projects has shown that Philippine wages are lower, but that the number of people employed is greater, therefore increasing costs.

Operation and Maintenance (O&M) costs are estimated in Table 4.6 for each scenario. These costs include consideration of coal consumed for electrical power, manpower requirements, and spare parts. They are based upon 8760 operating hours per year at 75% derated load capacity.

Table 4.6

OPERATING COSTS FOR CWM PLANT

Scenario	Dry Coal, MT/hr Processed for 75% Load	Estimated O&M Expenses/MT of Dry Coal	Estimated Annual O&M Expenses (Without Taxes, etc.)
A.	47.0	$6.16	2.54 Million
B.	57.8	5.29	2.68 Million
C.	202.0	3.78	6.69 Million
D.	245.0	3.58	7.70 Million

These costs will be utilized in Volume V to produce the financial and economic analyses.

5.0 TRANSPORT OF CWM FUEL FROM SEMIRARA TO LUZON

CWM can be transported at sea using the same type of vessel as is used for petroleum products. Since the weight of CWM per unit volume is greater than petroleum products, the number of barrels transported in a specified tonnage vessel will be less. Since the weight per unit volume is greater, the pumps normally found on a petroleum carrier will not be satisfactory, and must be changed.

Other minor changes may be necessary, such as increasing the slope of container bottoms to facilitate slurry drainage, adding agitation equipment, and limiting evaporation. CWM is not subject to fire or explosion; and therefore, insurance premiums should be lower than for transporting petroleum products.

The Philippines has an existing industry equipped to transport liquid products from island to island and it should be a simple process to adapt to CWM movements as required by this project.

5.1 The Transport Route

Three routes to transport CWM from Semirara to Sucat Station were investigated:

- Semirara to Sucat direct by barge via Manila Bay, the 17 kilometer Pasig River, and Laguna Lake.
- Semirara to Batangas by barge, through the Caltex Refinery port and storage facilities to an existing 16" black petroleum products pipeline station, and then pumped 90.5 kilometers through the pipeline to Sucat.
- Semirara to the Meralco Rockwell Station port on the Pasig River by barge, through the Rockwell port and storage facilities to a 10" existing pipeline, and then pumped 10 kilometers to Sucat.

The Laguna Lake route is no longer under consideration because of a very small capacity lock installed recently at the head of the Pasig River to prevent salt water intrusion. It only permits 1000 MT barges to pass. The Batangas route is not presently under consideration due to technical uncertainties that are involved in raising the CWM fuel from sea level to approximately 1000 feet elevation in a 16" diameter pipeline. This route may be investigated further in the future if the Sucat Station were totally converted. Experience in CWM fuel handling gained during the early phases of the Sucat Station conversion would aid these investigations.

The route via Rockwell Station using the existing 10" pipeline appears to be the most economical and technically acceptable solution. Technical details and economics regarding the use of the 10" pipeline are presented in Section 6.

5.2 Transporting CWM from Semirara to Rockwell

CWM is proposed to be moved from Semirara to Rockwell port using revamped petroleum type barges of 5000 - 6000 metric ton capacity similar to those that are currently operating between the islands in the Philippines.

Four barges of this size-range and two appropriate capacity tugs are proposed, operating in two sections. The schedule for these barges would be based on a seven-day round trip, including: 1/2 day each loading and unloading, four days travel to Rockwell loaded, and two days return empty.

Plant production and storage capacity for these barges will result in one of two storage tanks being filled and ready to load a two barge section every three days.

5.3 Barge Transportation Costs

Three maritime transport companies were interviewed and their estimates of costs were very similar:

Table 5.1

COSTS OF CWM BARGE TRANSPORT

	Cost ($/MT)
Loading	$ 1.00
Transport	5.30
Unloading	1.00
	$ 7.30

These costs can be combined with the others reported previously to develop total costs for CWM production and transport alternatives.

6.0 PIPELINE TRANSPORTATION OF CWM FUEL

6.1 Introduction

A major consideration for the introduction of coal-water-mix fuel to the Philippines is the means of delivery of the CWM from the preparation facility to the consumer. Chapter 4.2, Volume IV indicates that the CWM preparation facility will be located on Semirara Island. As Sucat is not directly accessible by barge from Semirara Island a means of transporting the CWM from a remote barge unloading facility to the plant will have to be employed. One of the transportation methods under study is the use of a slurry pipeline.

Pipelining offers advantages over alternative methods of delivery such as rail or road. There is no operational railroad to the Sucat site, and building a new railroad would be very expensive. Transportation by truck is not practical since all access roads and highways are already very congested.

The use of a pipeline for delivery of CWM to the Sucat generating station appears attractive as there are two existing oil pipelines which could be used with appropriate modifications to transport CWM fuel. The first, owned by the First Philippine Industrial Corporation (FPIC), currently carries oil to Sucat. It is a 16 inch diameter pipeline which serves Sucat from a marine terminal at Batangas in southern Luzon. The second pipeline, owned by Meralco and presently inactive is a 10 inch line which was installed to transport oil from Sucat to the Rockwell generating station. If converted, this pipeline would operate in reverse of its original path. Barges would deliver CWM to Rockwell, and the pipeline would be used to transport it to the Sucat station.

6.2 Overview of Slurry Pipeline Technology

Long distance solids transport by pipeline offers a number of advantages over conventional road and rail transport systems, including:

- Competitive economics. Capital costs are less than that for a new railway, and total transportation costs are generally lower than for either rail or road systems for large annual volumes.

- Reduced environmental impact, since the product is fully enclosed over the route of transportation; is not exposed to traffic accidents; and is transported in a carrier fluid which minimizes airborne contamination.

- Reduced effects of inflation. Pipelines are capital intensive. Accordingly, increases in fuel (power) and labor costs have a smaller effect on delivered cost of product than with rail or road systems.

- Immunity to weather. Rail and road transportation systems can be impeded by flooding of roadways, rail washouts and difficulties in loading/unloading. Weather will not affect deliveries in a well designed pipeline.

The use of pipelines for the transportation of solids over long distances has gained acceptance as a viable alternative to conventional road and rail transport systems. Table 6-1 lists some of the major slurry pipelines in operation throughout the world.

Table 6-1
PARTIAL LIST OF
SLURRY PIPELINES

Name	Material	Size (in)	Length (mi)	Date of Commissioning
Black Mesa	coal	18	273	1970
Bougainville	copper	6	17	1972
West Irian	copper	4	69	1972
Pinto Valley	copper	4	11	1974
Tasmania	iron	9	53	1967
Waipipi (land)	iron	8	4	1971
Waipipi (offshore)	iron	12	1.8	1971
Pena Colorada	iron	8	30	1974
Seirra Grande	iron	8	20	1976
Samarco	iron	20	250	1977

These pipelines are used to transport a variety of solids over long distances. It should be recognized, however, that none of these pipelines have been used to transport a coal-water-mix fuel, i.e., a concentrated slurry of pulverized coal suitable for direct burning in a furnace as is contemplated for the Sucat pipeline.

A CWM fuel differs from a standard transport slurry in several respects. Firstly, the fuel slurry consists of a finer grind of coal than a transport slurry. Secondly, the CWM fuel is a more homogenous and more viscous fluid. These differences result in the CWM fuel having greater stability, but also a greater viscosity and frequently non-Newtonian behavior. Therefore, although settlement and pluggage in an idle pipeline are of somewhat lesser concern, the frictional pressure losses are significantly higher. This results in higher pipeline and pump discharge pressure and greater power requirements.

Current coal slurry pipeline designs are based on petroleum pipeline technology, with some important differences. Pipes are constructed of carbon steel, but generally have a greater corrosion allowance, up to 4 mills per year (mpy), due to the acidic nature of coal slurries and the corrosion/erosion mechanisms present. The CWM fuel contemplated for Sucat should not experience corrosion rates of this magnitude, since the coal particles are smaller than in typical transport slurries, resulting in much reduced erosion. Also, the CWM fuel will be adjusted for pH at the preparation plant, thereby reducing corrosion. The Sucat pipeline should not experience more than 1 to 2 mpy. However, this must be confirmed by testing with the actual CWM fuel prior to finalization of pipeline design.

Transport slurry pipelines typically have restrictions on slope. For coal slurries, the maximum slope is limited to 16% to prevent formation of plugs due to settlement of solids at the base. Again, the CWM fuel for the Sucat pipelines is expected to be less susceptible to this phenomenon due to its greater stability and the smaller coal particle size, which would ease resuspension of settled particles, however this has to be confirmed by testing in a pipe test loop.

Slurry handling equipment differs from that used on petroleum lines. The most common type of pump used in long distance coal slurry applications is a double acting piston type with variable speed drive. This pump combines low shear rates (to avoid particle attrition and resultant effects on viscosity) with high pressure capability to overcome the greater frictional losses associated with slurry flow. Valves are generally required to have greater port areas to reduce erosion and improved stem seals to prevent sticking of the stems. Metal seats are used on ball and plug type valves. Nonplugging and erosion resistant instruments are needed for slurry service.

Operation of slurry pipelines also differs from petroleum lines. Slurry flowrates must be maintained above the critical velocity to prevent sedimentation. Accordingly, turndown of a slurry line is restricted. Startup must be done more gradually than with petroleum lines to prevent local compaction of solids and resultant plugging. Means must be provided to clean and flush the lines and pumping equipment before shutdown and restart, whenever a longer shutdown is contemplated.

These differences must be taken into account in the design of a new slurry pipeline, or the modification of an existing petroleum pipeline for slurry service.

6.3 Description of Existing Pipelines

There are two existing oil pipelines under consideration for CWM fuel to the Sucat station from a barge unloading facility on the coast. The first runs 90.5 km from Batangas, northeast to the Sucat site. This pipe is 16 inch outside diameter, 0.406 inch wall made to API Specification 5LX, Grade X52. It is used to deliver heavy oil products to Sucat and other customers. It is reportedly in good condition and is capable of a 1900 psig working pressure. It has two pumping stations, one in Batangas at the origin of the pipeline and a booster station at 23.1 km at St. Thomas. There is a 69 kV transmission line which parallels the pipeline, and could be used to supply electric power to new booster stations. This pipeline incorporates a PIG (sphere) launching and recovery system. The pumps at Batangas and St. Thomas are centrifugal types, not suitable for use with CWM fuel.

The second pipeline under consideration is a 10 inch line which runs approximately 10 km from Sucat north to the decommissioned Rockwell power plant. It is made of 10 inch diameter, 0.307 inch wall carbon steel pipe made to API 5LX-X52 specifications. The condition of this pipeline is not known and it is recommended that its condition be checked in the next phase of this study. The budget cost estimates assume that some portions of the pipeline (approximately 500 meters) will be either replaced or repaired. This line is no longer in service, and has no pumping provisions at Rockwell to pump CWM to Sucat. This pipeline incorporates a PIG launching system, which will be needed for CWM service.

6.4 Evaluation of Pipelines for CWM

6.4.1 Design Considerations

Either of the existing pipelines could be made available for CWM service. The following assumptions were made to assess the required modifications and cost of converting the pipelines. These assumptions are based on the experimental work done to date by Brookhaven National Laboratories with CWM fuels prepared from Semirara and Semirara-Malangas coal blends. See Volume II for details of the results of the experimental work.

The assumed CWM fuel properties are:

	Semirara CWM Fuel	Blended Coal CWM Fuel
Type	Honogeneous Fuel for Direct Firing	
Concentration coal/water	50/50 or 55/45	60/40
Coal Source	100% Semirara	75% Semirara, 25% Malangas
Coal Grind	$\geq$ 70% 200 mesh	$\geq$ 70% 200 mesh

Rhelogy		
Type:	Bingham Plastic	Bingham Plastic
Yield Stress (dynes/cm^2)	100	100
Coeff. of Rigidity (dyne-s/cm^2)	9	9
Stability	Good	Good
pH	6.8 min/7.2 max	6.8 min/7.2 max
Specific Gravity	1.15 min/1.20 max	1.15 min/1.20 max
Critical Velocity	$\leq$ 4.5 fps	$\leq$ 4.5 fps

The assumed CWM pipeline design requirements are:

Minimum Pipeline Velocity	5 fps (stabilized)
Operation	Intermittent batches consistent with velocity and consumption requirements.
Design Code	ANSI B31.4
Design Life	20 years
Corrosion Allowance	0.002 inches/yr.
Utilities Assumed Available Along Route of Batangas to Sucat Pipeline	Land (2-3 acre plots) 69 kV electric source Domestic water source Road access

The experimental work by Brookhaven National Laboratories with CWM fuel made from Semirara coal shows that the fuel properties vary considerably with the method of formulation, additives used and coal concentrations. Reported pipe loop tests with CWM fuels prepared by BNL and five manufacturers predict pressure drops in a 10 inch line between 46 psi/mile and 473 psi/mile (See Volume II, Section 7.3). For the shorter Rockwell to Sucat pipeline, the pressure drop of 269 psi/mile at 5 fps flow rate (which is the predicted pressure drop for the baseline CWM fuel) was assumed for design of pumping equipment. For the longer Batangas to Sucat 16 inch pipeline a pressure drop of 140 psi/mile was assumed. It is strongly recommended, however that longer term pipe loop tests in larger pipes (at least 6 inch diameter) should be carried out, and then resulting data used for design of the CWM pipeline and its pumping equipment.

Maximum CWM fuel consumption rates, Mt/hr:

	Semirara CWM (55% coal)	Semirara CWM (50% coal)	Blended CWM (60% coal)
Minor Modification			
Sucat 1	96.2	109.0	84.0
Sucat 2	121.8	138.0	106.4
Sucat 3	121.8	138.0	106.4
Sucat 4	182.7	207.0	159.6
Total Sucat 1-4	522.5	592.0	456.4
Major Modification			
Sucat 1	111.5	126.5	96.8
Sucat 2	148.3	168.1	129.2
Sucat 3	148.3	168.1	129.2
Sucat 4	222.5	252.2	193.8
Total Sucat 1-4	630.6	714.9	549.0

6.4.2 Pipeline Modification

6.4.2.1 General

The Batangas pipeline can supply the fuel requirements for all four converted units operating at full load. The Rockwell pipeline, however, can only supply the requirements for major conversion of Sucat 2 and 3, or for the minor conversion for Sucat 2, 3 and 4. An additional pipe will have to be installed to supply the remaining units.

The conversion of either Batangas or the Rockwell pipelines will consist of the addition of new pumping stations, dump tanks and flush tanks. The existing pumps on the Batanges pipeline are centrifugal types, unsuitable for the slurry service and the Rockwell station has no pumps. Positive displacement piston-type pumps, specially designed for slurry service and equipped with variable speed electric drives are recommended for the CWM pipeline. These pumps are similar to those used on the Black Mesa coal slurry pipeline, where they have given good service. Three 50% capacity pumps will be supplied at each pumping station. In addition, each pumping station will be provided with low head, low speed centrifugal type slurry pumps for priming and supplying adequate suction pressure to the main pumps when drawing from a tank.

Each booster station on the Batangas pipeline will be equipped with a slurry dump tank, sized to hold the contents of the upstream pipe section. These tanks will be used for emergency dumps, as a source for pipeline startup, and as holding tanks for pipeline purging. Each tank will be provided with mechanical agitators to maintain the stored slurry in suspension.

Each pump station and the pipeline terminus will be provided with a water storage tank to supply and receive flush water during flushing operations. Each tank will be sized to hold the entire contents of the larger of the upstream or downstream pipe section. Normal supply of flush water will be from the main pipeline water source at the origin of the pipeline, and from downstream flushes at booster stations. A local water source must also be provided at the booster stations to account for initial fill and later for make-up. The local source will fill the tank gradually in the period of time between major flushes.

All new piping will be carbon steel, of welded construction designed to ANSI Code B31.4 "Liquid Petroleum Transportation Piping Systems."

The pipeline will be provided with launchers and receivers of cleaning augers (PIG System). However, experimental work needs to be carried out to determine PIG effectiveness and whether they can operate with Semirara CWM fuel without creating plugs and blockages.

New valves will be packingless knife gate design for low pressure (less than 100 psig) service. High pressure valves will be steel plug type with metal seating surfaces. Existing line valves (if any) may have to be replaced with metal seated plug valves (or ball valves if a PIG must be passed). Pressure taps will be located at mid, quarter and terminal points of each pipeline section to establish hydraulic gradients, detect long-term changes in pipeline performance, and assist in locating plugs.

Instrumentation will be suitable for slurry service. Flow meters will be U-tube mass flow ("Micro-Motion" or equivalent). Pressure and differential measurements will be non-clogging, non-fouling types such as Ronnigin-Petter's "Iso-Spool" or "Iso-Ring". Level measurements will be performed by instruments such as Drexelbrook's "Universal Level Transmitter" with "Cote Shield" electronics, which can produce accurate readings even with heavy material build-up on the sensing element.

All pump galleries will be equipped with hydropneumatic tanks on the suction and discharge headers to provide surge protection for the pumps. Duplex suction strainers will be provided for all pumps.

The pipeline operations will be automatically controlled from a microprocessor based system located at the barge receiving terminal. Local controls at each pumping station will also be provided to permit maintenance and manual operations. However, these stations will normally be unmanned.

Normal operation will be "tight-line," i.e., each booster pump will take suction directly from the upstream section of pipeline. Tanks will only be used for startup, shutdown and emergencies.

Each pump station will be supplied with a small prefabricated structure housing a small maintenance/tool shop, controls, and the pumps. All other equipment will be located outdoors. A summary of the proposed design features for the pipelines is presented on Tables 6-2 and 6-3.

Table 6-2
CWM Fuel Pipeline Design Features
Batangas - Sucat

Pipeline Design flow rate	2800 gpm
Velocity	5 fps
Maximum Internal Pressure	1700 psi
Pump Stations	
No.	5
No. Pumps/Station	3 x 50%
Capacity per Pump	1400 gpm
Pump Discharge Head (Max.)	1700 psi
Power per Pump	825 bhp

Pump Station	Location (Km from Batangas)	Dump Tank Size (bbl)	Flush Tank Size (bbl)
#1	0	-	11,000
#2	15	11,000	11,000
#3	30	11,000	17,000
#4	53	17,000	17,000
#5	7[illegible]	15,500	15,500

Table 6-3
CWM Fuel Pipeline Design Features
Rockwell-SUCAT

Pipeline Design Flow Rate	1200 gpm
Velocity	5 fps
Maximum Internal Pressure	1850 psig
Rockwell Pump Station	
No. Pumps	3 x 50%
Capacity per Pump	600 gpm
Pump Discharge Head (Max.)	1850 psi
Pump HP	400 BHP
Dump Tank	-
Flush Tank	4,000 bbl

6.4.2.2 Batangas - Sucat Pipeline

Due to its length and pressure limitations, the 16 inch Batangas pipeline will require a total of five pumping stations to deliver CWM fuel to Sucat. This determination was based on the results of experimental and theoretical work carried out on the baseline slurry by BNL. Larger scale experimental work on a similar pipeline and on additional fuel formulations will be required prior to modifying the pipeline.

The first new pumping station will be located at the pipeline origin at Batangas. The four booster stations will be located at 15 to 20 km intervals. The existing centrifugal pumps at Batangas and the St. Thomas booster station will remain for service on petroleum products. Although it is not a CWM booster station, the existing booster station will have to be modified to allow the CWM fuel to bypass the existing pump. New piston pumps (3x50% capacity)will be installed at each of the pumping stations (including Batangas) for CWM fuel service. New electrical supplies will be provided at each of the booster stations.

Since the station capacity factor after conversion can be expected to average around 70% of maximum output, the pipeline will spend most of its operating time transporting CWM. Therefore, alternate methods of delivering fuel oil to existing customers may have to be found, depending on their future demand for oil. It should be emphasized that some oil will still have to be delivered periodically to Sucat for light off, warmup and flame stabilization. Fuel oil deliveries should be scheduled in large, infrequent increments to minimize the difficulties of switching pipeline contents.

6.4.2.3 Rockwell Pipeline

The Rockwell pipeline is designed to transport fuel oil approximately 10 km from Sucat to the Rockwell generating station (now decommissioned). Accordingly, there are no pumping facilities at Rockwell. Three new 50% capacity positive displacement piston pumps, a flush water tank and a control/maintenance/pump house will be added at Rockwell. Existing electrical supplies are assumed available for the new pumps. Due to this pipeline's relatively short length of 10 km, no booster station will be required. The existing pipe cannot supply the fuel requirements for all four Sucat units. An additional pipe will have to be installed alongside the existing line to augment its capacity to serve all Sucat units.

A schematic diagram of the converted Rockwell-Sucat pipeline is shown in Figure 6-1.

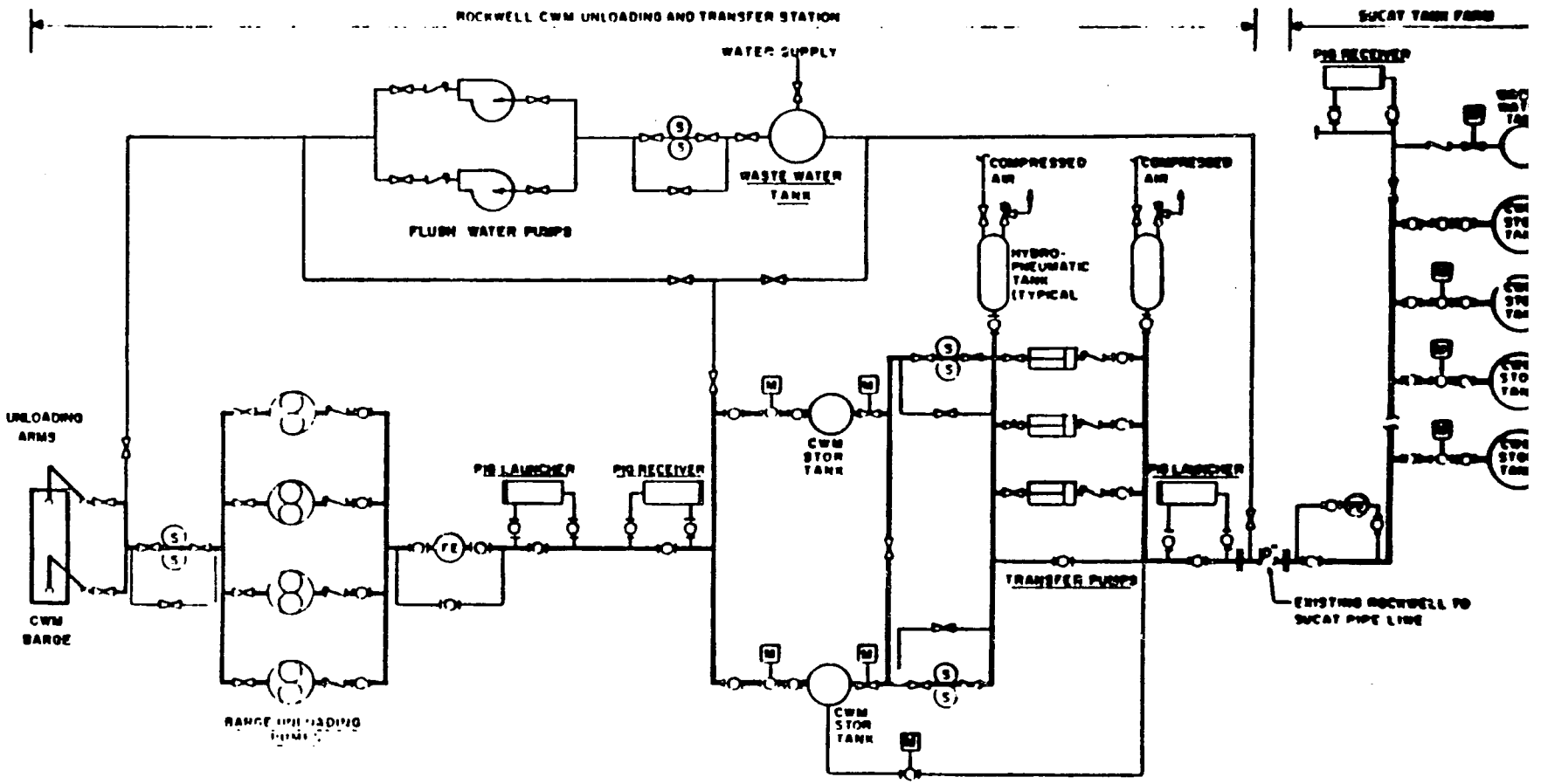

ROCKWELL CWM UNLOADING AND TRANSFER SYSTEM

Figure 6-1

6.5 Cost Estimates

6.5.1 Capital Costs

Budget type capital cost estimates were developed for modification of the existing pipelines for CWM fuel service. The estimates include the cost of upgrading the existing facilities, addition of new pumping equipment, new pipe accessories at the pumping stations, flush water storage tanks and pumps, instrumentation and controls and electric power supply to the pumping units. The estimates are based on limited information available on the condition of existing facilities. Since CWM fuel properties greatly affect the design of the pumping equipment and the pipeline, it is strongly recommended that pressure drop and operating data (settlement, tendency of pluggage, PIG cleanability) be obtained on a larger pipe loop rig, and then the data be used to develop a detailed conceptual design and more accurate cost estimates.

The capital costs developed in this phase of the study for conversion to CWM fuel of the existing pipelines should be used only for preliminary budgeting. These costs are based on using the fuel properties for the baseline CWM prepared and tested by BNL. (See Volume II Section 7.3). The capital cost for modifications and additions to the 10 inch Rockwell to Sucat pipeline is estimated at 6,000,000 US dollars (January 1985). Addition of a parallel line to augment the capacity is estimated to cost an additional 6,500,000 US dollars. Conversion of the 16 inch pipeline from Batangas to Sucat is estimated to cost U.S. dollars 25,000,000 (January 1985). These costs include direct material and labor costs, engineering and other indirect costs. They do not include contingencies, escalation and interest during construction.

6.5.2 Operating Costs

Annual operating costs for the Rockwell to Sucat pipeline are estimated at U.S. $850,000/year for the present line expressed in January 1985 dollars. These costs include operating and maintenance labor, spare parts, consumables and electric power at U.S. $0.06 per kilowatt hour. Annual operating costs for the Batangas to Sucat pipeline serving all four Sucat units (major modification, 75% capacity factor) are estimated to be $4,000,000 in January 1985 U.S. dollars.

6.6 Conclusions and Recommendations

Available data on the flow properties of CWM fuels produced from Semirara coal or from a Semirara-Malangas blend is not sufficient to accurately predict the pressure drops in pipelines and to size the pumping equipment. Stability of these CWM fuels is not well defined and one cannot determine with certainty rate of sedimentation, reentrainment and tendency to form plugs which are important design considerations in designing an operable pipeline system.

An examination of the preliminary cost estimates reveals that the shorter pipeline from Rockwell to Sucat is the least costly. This cost

advantage must, however, be weighed against the increased barging costs to Rockwell. It is recommended that for conversion of Sucat 2 to CWM, the shorter Rockwell-Sucat pipe be employed to supply CWM fuel. The experience gained on this line and the data measured on pressure drops and stability will then allow reevaluation of the best choice for system expansion. This expansion could consist of the addition of a second pipeline on the Rockwell-Sucat right-of-way or the conversion of the Batangas-Sucat pipeline. Barge unloaders, pumping equipment and piping accessories can be bought such as to reuse them on the Batangas-Sucat pipeline, if it is determined that the latter is the more economical choice.

7.0 REVIEW OF VOLUME IV COST DATA

This volume serves to provide descriptions and costs for the parts of the coal system necessary for conversion of Sucat Station to CWM fuel. As such, it includes the mineable resource, the preparation of CWM fuel, and the transport of CWM fuel to Sucat.

Section 3 includes data for the Unong, Himalian and Panian sites at Semirara. Mining plans are presented along with new investment and operating costs for the potential sites at Himalian and Panian. A present operating cost estimate of $21.17/MT on the basis of one million MT/year at Unong can be compared with the new sites. Himalian for example could range from $22.42 to $19.55 as the mine is developed, and Panian could range from $32.43 to $24.93 as it is developed, following their consultant reports.

Section 4 presents a design with related costs for a CWM preparation plant. Beneficiation is not included. For the conversion of Sucat 2, a three train plant is proposed at a total installed cost of $23.2 million. Estimated annual operating costs for the four retrofit scenarios range from $2.54 to $7.70 million.

Section 5 includes costs for barge transport. Three companies were interviewed and an average cost of $7.30 was estimated to include loading, transport, and unloading.

Section 6 describes the pipeline alternatives and reviews costs for Batangas-to-Sucat and Rockwell-to-Sucat. The preferred Rockwell route estimates include capital costs for modifications and additions at $6 million. A new parallel pipeline is estimated at an additional $6.5 million. Annual operating costs in January 1985 $ for the present line are $850,000.

These cost estimates will be utilized in Volume V to produce the total project's financial and economic analyses.