PN-AAS-227

28927

BABASSU (ORBIGNYA SPP.): GRADUAL DISAPPEARANCE VS. SLOW METAMORPHOSIS TO INTEGRATED AGRIBUSINESS

By

Pedro J. Pick

WITH THE COLLABORATION OF

José Mário F. Frazão

William P. Mason

Peter H. May

Wilson Milfont Jr.

A REPORT PREPARED FOR THE NEW YORK BOTANICAL GARDEN

INSTITUTE OF ECONOMIC BOTANY

JANUARY, 1985

EXECUTIVE SUMMARY

This study's objective was to identify possible ways in which wild babassu palm stands, and existing farming systems that incorporate babassu as an element, can have increased economic viability. Many factors at work suggest that the future will bring a change in the social and economic condition of the local peasantry and therefore the future of the babassu palm. Socio-economic impacts are being analyzed separately in other collaborative studies in order to consider all relevant factors affecting the landless poor who depend most significantly on babassu for their livelihood.

The babassu sector of Brazil (most of it concentrated in the State of Maranhão) has four relevant components:

1. The Babassu Forest
2. The Land Owners
3. The Peasants
4. The Oil Producers

In spite of rhetoric, the forests and the peasants have few true defenders. On the other hand, the landowners attempt to produce the most lucrative cash crops and the oil processors will crush any available seed which is profitable. The apparent availability of technology and capital makes it financially attractive to produce cash crops (e.g., sugarcane, soybeans, rice) by highly mechanized means. This puts more pressure on the babassu oilseed commodity system to prove itself economic and profitable.

One of the findings of this study is that the number of babassu palms is slowly but steadily being reduced. In areas with the most dense and productive babassu stands, large tracts of land have been cleared for mechanized agriculture. In the area of the cerrado (savanna), where babassu is even more important in relative economic terms, many landowners are not interested in the palm product. Nevertheless, sufficiently large numbers of trees exist to enable a reversal of this trend, provided that necessary actions are taken and continued.

Our estimate of the gross annual "value-added" by the present industry totals US $150,000,000 divided among the peasants, merchants, landowners and pressers.

A central issue of this work is consideration of the potential of the integral processing system for the babassu fruit. It is strongly believed that the present mode of utilization of babassu kernels alone for oil will very slowly diminish in absolute size and much more rapidly in its relative socio-economic importance. However, if the fruits were utilized more fully -- via integral processing -- the entire sector could be revitalized over the medium term (10 years). It is believed that this can be achieved despite past failures in this endeavor.

The critical issues which have negatively affected all integral processing projects are:

1. Financing. In the early 1970's financing was too easy and too cheap, inviting the "easy come-easy go" approach. Subsequently, due to a general shortage of capital in the economy and the "cane alcohol approach" (as a gasoline substitute), the flow of funds dried up completely.

2. Management. In general management has been extremely incompetent in dealing with these projects.

3. Technology.

a) Agronomy: Almost no work has been done to increase the yields of the wild forests.

b) Processing: Plants have been built despite little or no experience in breaking the fruit, storage, handling, charcoal and starch production, etc.

4. Raw Material Supply and Marketing. Industrialists generally did not study these aspects in depth, as the feeling was they posed little problem.

This study concludes that these four critical issues can be faced and solved. The approach taken is on two levels: medium term and long term. The first part recommends various actions directed at the need to "recover credibility" of the sector and to proceed with new integral processing activities. The latter consists of on-going agronomic and processing research activities as well as lobbying for relevant legislation regarding land utilization. From an entrepreneurial standpoint a credible feasibility study (business plan) is needed to procure adequate financing, and at the same time, an effective management team must be developed.

BABASSU (ORBIGNYA SPP.): GRADUAL DISAPPEARANCE VS. SLOW METAMORPHOSIS TO INTEGRATED AGRIBUSINESS

TABLE OF CONTENTS

EXECUTIVE SUMMARY. i

INTRODUCTION. 1

The Groups Comprising the Babassu Industry 2

Recent Changes Affecting the Babassu System. . . . 5

COMPONENTS OF THE EXISTING INDUSTRY. 6

Raw Material. 6

Processing. 20

Commercialization. 23

Integral Processing Projects. 29

Economic Significance of Current Industry. 38

FUTURE FOCALIZATIONS. 40

SUGGESTED ACTIONS. 42

Action Plan. 45

Development of Babassu Elsewhere in the Tropics. . .49

Babassu Plantation Project Proposal. 50

BIBLIOGRAPHY. 54

APPENDIX I. PERSONS INTERVIEWED. 56

INTRODUCTION

This study was undertaken in response to the need for an independent assessment of the current state of the babassu palm industry in Brazil and its future in that country, and other countries where these palms are native. It involved careful consideration of the background literature, fieldwork in Brazil, and subsequent discussions with specialists in the different areas. Our gratitude is extended to Michael J. Balick and Barbara Pick for assistance in the preparation of this report, to Anthony and Suely Anderson, and James E. Austin for permission to use some of the figures on production and flow charts presented here. This study was funded by the U.S. Agency For International Development (Office of the Science Advisor) through grant number DAN-5542-G-SS-1089 ("Domestication of the Babassu Palm") to The New York Botanical Garden (Michael J. Balick and Ghillean T. Prance, Principal Investigators). The study was carried out concurrently with a two year-long comprehensive study by Peter H. May on the socio-economic aspects of the babassu industry in Brazil, to be submitted as a doctoral dissertation in agricultural economics to Cornell University. These studies are intended to complement each other and present a balanced assessment of the babassu industry and its future potential.

THE GROUPS COMPRISING THE BABASSU INDUSTRY

This study addressed the questions of whether the babassu palm industry can be made more viable and if so, in what fashion. "The industry" might be interpreted as a sector where there is a general concurrence of aims among all parties involved. It is important to note that this is not the case.

The relevant groups involved in this industry and their respective motivations are:

1. The Peasants. It is estimated that some 450,000 women and their families base part of their economic existence on the babassu palm. We believe that presently their significant babassu-related activities are:

a) fruit collecting, breaking, and selling the kernels for cash, or trading for needed commodities;

b) homemade charcoal production from endocarp for own use and sale on the local level;

c) construction and production of domestic materials from the leaves and trunk.

The fruit collection and breaking is quite seasonal while charcoal production and leaf-stem utilization is year-round. Other agricultural activities of the peasant include cultivation of corn, beans, cassava, and rice, all grown for their own use (rice and cassava are also grown for trade and cash generation).

2. The Landowner. In many areas radical changes have occurred through huge government credits, resulting in the development of large mechanized farms often owned by "out-of-state immigrants" or investment groups. These are in large measure modern improved pasture operations. Crops grown by mechanized agriculture are mainly soybeans, sugarcane, and rice. Other areas remain more traditional and where this is the case the shifting cultivation-grazing-babassu combination is more frequent. Thus, the landowner ranges from an absentee individual or corporation to the local "godfather" who lives on the land or in the nearby village, collecting rent -- in cash or in-kind.

3. The Local Merchant. Several hundred small and large merchants are dedicated to agro-commercial activities which include buying kernels from peasants and selling them to the oil processing industry. Some merchants' income is derived almost solely from the kernel trade, while others are largely diversified in their activities. Furthermore, there is a tie-in with the storekeepers who sell their wares to peasants in exchange for kernels.

4. The Oil Processors. Some 25 plants operate in the Northeast and Goiás, ranging in size from several hundred to 15,000 metric tons (MT) per year in installed capacity for babassu oil and processing of other oil seeds. Approximately 120,000 MT of babassu oil are produced annually.

Some oil companies make soap for local use, but most oil is sold to the soap factories in the south. Some 400,000 MT of soap was consumed in Brazil in 1983, representing some 200,000 MT of lauric oil and tallow (the tallow:oil proportion varies according to relative prices, but usually ranges from a 50:50 to 70:30 ratio).

5. The Integral (Babassu) Processor-Entrepreneur. This group is motivated by the enormous natural resource embodied in the babassu palm, the energy shortage of the 70's, and the government's willingness to finance highly leveraged, energy-related projects. Interestingly, only one of the promoting groups is native to the region.

6. The Government. The government is concerned with the issues of power and development, trying to be everything to everybody. However, the critical actions add up to strong promotion of improved pastures, mechanized agriculture, mineral resource development and urbanization.

7. The Scientist-Naturalist. A very small group of Brazilian and foreign scientists are preoccupied with long-term issues, such as conservation of the Amazonian forests, cultural survival of indigenous populations, ecological balance, climate and nutrition.

RECENT CHANGES AFFECTING THE BABASSU SYSTEM

Several critical events have taken place, some slowly, others rapidly, that have affected the interrelationship of the parties involved in the babassu industry. These are:

1. Change in diet, especially in the densely populated south, from coconut milk and fats towards margarine and light vegetable oils.

2. Partial substitution of soap (especially for washing clothes) by HDS (heavy-duty synthetic) detergents.

3. Large subsidies and loans to the Northeast for roads, construction, housing, mechanized agriculture and pasture development.

4. National energy policy heavily directed towards use of sugarcane ethanol for fuel.

These events have resulted in peasant migration towards edges of the farms, roads, and urban centers, a gradual destruction of the babassu forests and substitution by mostly mechanized farms. In addition, many men have left (without their families) for the new gold fields, both in Maranhão and the neighboring State of Pará.

The results of this are seen in the oil processing plants where different oil seeds (e.g., soybeans, cottonseed, African Palm) which can be utilized interchangeably are being considered for

use. The peasantry, on the other hand, continues to produce on a per capita basis the same quantities of kernel as before. This may be due to their reduced access to arable land and thus an increased dependence on the babassu as a source of income, and also to increase in their numbers.

COMPONENTS OF THE EXISTING INDUSTRY

RAW MATERIAL

The babassu coco (fruit) consists of the kernel, endocarp, mesocarp, and epicarp. For all practical purposes, the epicarp has never been exploited, and the mesocarp very little. Each ton (1,000 kilos) of fruit yields some 40 kilos (KG) of lauric oil, 30 KG of meal (animal feed), and 200 KG of charcoal. Also potentially recoverable are some 250 KG of condensible gases (for tar, methanol, and acetic acid). Detailed (theoretical) composition is available in the literature. For example, the drawing on the following page, taken from Anderson and Anderson (1983) illustrates the data for technologies in the pilot stage in the city of Bacabal in the heart of the babassu zone of Maranhão, in 1980.

Contrary to older reports, recent aerial reconnaissance shows that only some 7.0 million hectares of land are effectively covered with babassu in the four major states where it grows in Brazil. No accurate data exists on the remaining states where babassu "occurs" in scattered stands not yet fully inventoried.

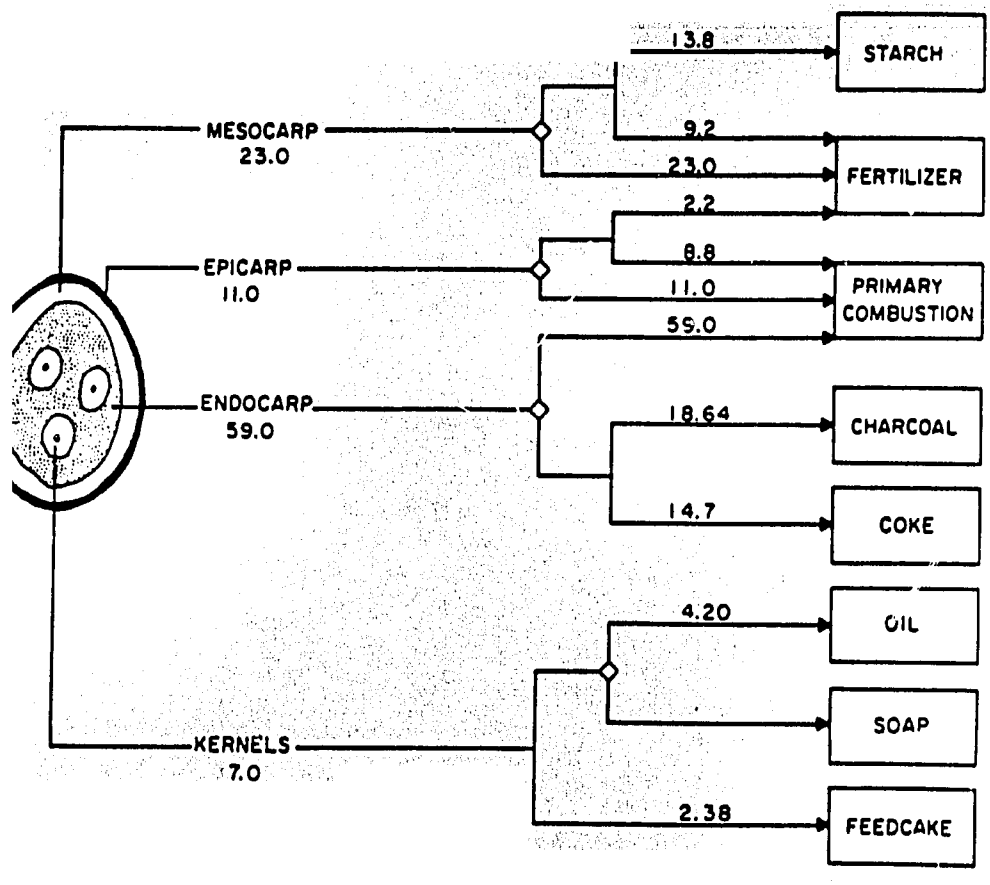

Figure 1. Flowchart of products derived from babassu fruits by industries in Bacabal, Maranhão, during 1980. Diamonds represent "either-or" options. Numbers are percent of fruit weight. Adapted from Mendes and Carioca (1981) and Empresa Industrial de Bacabal (pers. comm.). From: Anderson and Anderson (1983). Used with permission of the authors.

The area of "occurrence" is approximately double that of "effective coverage." In our judgement, 3.0 to 3.5 million hectares are economically accessible. The rest would need additional access roads.

Reports on yields from wild groves vary between 1.2-4.7 MT of coco per hectare, with occasional higher yield reports. These variations are due to inaccurate data; different varieties, density, and health of trees; soil fertility; precipitation fluctuation from year to year and region to region; frequency of the female flowers on trees, and other factors. Therefore, a conservative calculation of the amount of fruit available would be 3.0 million hectares at 2 MT/hectare (a widely accepted average), which gives 6.0 million MT of fruit, or some 240,000 MT of oil, 180,000 MT of kernel meal, and 1.2 million MT of charcoal. It should be noted that according to available statistics, the above mentioned 240,000 MT of oil production has never been reached. Table I shows most recent output data describing only about a 30% utilization of existing fruit production or slightly over half of that "economically accessible."

Much speculation exists about the reason for this shortfall in production. We believe it is due to the difficulty in reaching all accessible fruit; in other words, under the present socio-economic mode of collection, the "accessible fruit" is in fact highly overestimated or highly theoretical.

TABLE 1. Three State Rate of Harvest (Source of 98% Kernel)

State	Area Covered (1000 HA)	Aprox. Area Harvested (1000 HA)	% of Potential Output	Mean Prod. (MT/HA)	Annual Theoretical Prod. (1000 MT)	Annual Harvested Prod.* (1000 MT)
Maranhão	4,723	1,559	33%	1.689	7,976	2,621
Piauí	503	231	46%	1.245	626	286
Goiás	1,138	231	21%	2.921	3,324	693
Total	6,364	2,021	30% (Average)	1.859 (Weighted Average)	11,926	3,600

*The amount of fruit harvested in 1980, based on kernel production statistics.

SOURCES: MIC/STI, for estimates of area effectively covered and mean productivity of stands by State. IBGE, 1983 for kernel output (1980 data); kernel treated as 7% of fruit weight.

The collection and breaking process has always been, and still is, a cottage industry largely employing women who go out and collect the fruits, and break them by placing them on an axe and hitting them hard with a piece of wood. The kernel is then sold to the farmer (whose land they rent to live on, paying usually in a share of the rice crop), directly to a merchant, or more

rarely, an oil presser. The peasant usually obtains 50-70% of the landed cost in the oil factory; many variables play a role: number of intermediaries, volume, season, type of harvest year, impurities, distance from plant, credit, and current rate of inflation.

It is important to note that if some 450,000 families produce over 300,000 MT of kernels, at the 1983/84 harvest peasant prices of US $250/MT, this results in income of US $75,000,000 or some US $170 per family per harvest. The calculation of this is as follows:

5 KG/day per family x 135 days of harvest = 675 KG/family;

675 KG/family x 450,000 families = 300,000,000 KG of kernel = 300,000 MT of kernel.

Given that the income from sale of babassu kernels represents a considerable share of the peasant's cash income, a <u>sudden</u> change in the collecting-breaking would have an important (catastrophic) short-term impact on a significant number of peasant households.

Availability of <u>coco</u> (in kernel form) to the oil processor seems to be quite inelastic to price. The peasants accept the market prices which are cyclical each year, reaching the lowest levels during the peaks of harvest (October) and then rising by May when most industrial plants stop pressing babassu (Table II).

TABLE II. Seasonal Fluctuation In Price Of Babassu Kernels

Year	Price in Oct.	Price in May	Change	6 Mo. Inflation	Real Change
1977-78	Cr$ 5.65	Cr$ 7.45	32%	19%	13%
1978-79	Cr$ 8.25	Cr$ 12.00	45%	27%	18%
1979-80	Cr$ 16.75	Cr$ 19.75	18%	50%	(-) 32%
1980-81	Cr$ 21.50	Cr$ 26.00	21%	53%	(-) 32%
1981-82	Cr$ 36.50	Cr$ 92.50	153%	98%	55%
1982-83	Cr$132.00	Cr$150.00	13%	66%	(-) 53%
1983-84	Cr$310.00	Cr$900.00	190%	110%	80%
		Average:	67%	60%	7%

Sources: Prices placed at the plant, from CACEX; inflation rates from Fundação Getúlio Vargas: Conjuntura Econômica. Price changes calculated by Peter H. May.

The relatively fixed price of kernel production is believed to be dictated by various factors:

1. Behavior Patterns. Some of the fruit is used as food when there is nothing else available; otherwise collecting and breaking volume is related to how pressed the peasant families are for cash, how much cash the market prices will generate and how much fruit they can effectively collect (this latter quantity is usually governed by the distance of trees from their homes and landowners' policies with respect to access for collection).

2. Climatic Factors. It is believed that in dry years fruit yields drop significantly. Others believe that this is a myth and that the reduced yields during a drought may be due to the greater frequency of forest fires or the same quantity of fruit harvested over a much shorter period of time.

3. Demographic. This is the total number of peasants dedicated to collecting and breaking babassu kernels. A widely held belief is that babassu kernel production is on a definite and sharp decline. Lately, many men have left to work in the gold fields, and some families have moved to urban areas. Field observations do not confirm this decline. On examining the records of one large babassu merchant it was found that his sales volume for the month of October had increased dramatically over the last four years (Table III).

TABLE III. Kernels Traded By Representative Merchant

Month	Kernels (KG)
October 1980	277,000
October 1981	319,000
October 1982	305,000
October 1983	461,000

During this same period, real kernel prices remained at nearly the same level -- an average of US$ 0.48/KG placed at the plant in 1984 constant dollars (down from a long-term price of US$ 0.67/KG in the 1970's).

These figures are not conclusive, since it is probable that the merchant is now travelling larger distances to buy the kernels and also the month of October is by no means synonymous with the entire season, which varies in length. However, Table III provides an indication based on facts rather than conjecture. Another pertinent observation is that urban women regularly go on daily trips from towns and cities to break fruit. The graph in Figure 2 illustrates the rise in kernel production in Maranhão as well as Brazil. The population scale on the same figure indicates that this growth in kernel output is strongly correlated with an increase in population, rather than an increase in individual productivity. The "R^2" -- a generally accepted statistical measure of correlation -- between population growth and growth in babassu kernel output was almost 0.925 for Maranhão, out of a possible 1.000, or nearly perfect correlation.

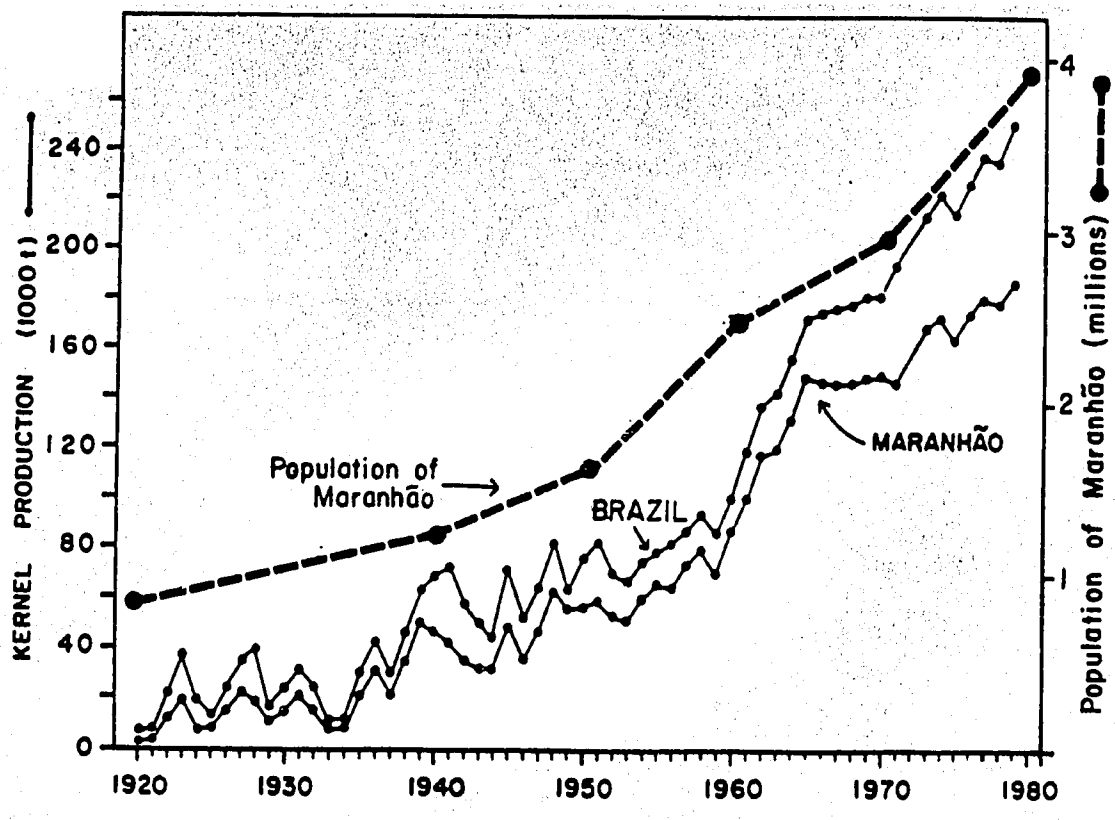

Fig. 2. Production of Babassu kernels in Maranhão and Brazil (solid line), 1920-1979 and population in Maranhão (dotted line), 1920-1980. Source: IBGE, Anuário Estatístico (1983 and previous volumes), after Anderson and Anderson, 1983; population figures provided by Peter H. May.

Another important aspect of the availability of the wild grown fruit is the "moving frontier" or the advent of mechanized farms (primarily rice, sugarcane, soybeans, and corn) and an extensive road system. Theoretically, the roads should have brought increased collection accessibility. In practice the forced and voluntary peasant migration to the edges of the farms and main roads has, in fact, greatly decreased the amount of accessible fruit under the present mode of collection. Furthermore, the new mechanized farmer usually views the peasant's presence as an undesirable element on his new farm which needs very little unskilled labor.

The government's attitude is predictable: at the Federal level numerous actions have been planned to "save the babassu" and to attempt its exploitation for energy-related goals. As the latter became less realistic (with possible exception of charcoal) the Federal interest remained more as a socio-political expediency. At the local (State) level, the attitude is much more open: the large loans and investments are destined towards those areas that address short and medium term issues. Therefore, construction, large scale food production, and social services provide jobs, income, and quality of life the new lower middle and middle classes demand. The peasants and the palm forests are viewed as unimportant and even as impediments to progress.

Despite the forces which are acting to diminish the relative importance of babassu production to the region's economy, studies conducted over the past decade suggest that substantial benefits may be obtained from rationalized management of native stands or plantation establishment.

Preliminary field observations carried out by a number of researchers including Mariano Mendes (for Agrima and the Institute of National Resources of Maranhão) indicate that yields can be systematically increased with relatively little investment or operational costs. The methodology is quite simple "if one knows what he is doing." It consists of:

a. establishment of an optimum density of trees, estimated at approximately 100 trees per hectare;

b. selection of locations in areas where the water availability for the plants is greatest (zones of high precipitation, clay soils, non-flooded areas, stream banks, etc.);

c. systematic elimination of trees with abundant male flowers, and;

d. systematic planting of babassu varieties that, within remaining groves, have shown greater yields in specific areas.

Based on response in managed native stands and anticipated results using improved cultural treatments (using methods commensurate to those that have achieved success in West African oil palms) experts consulted feel that with little investment and very low maintenance costs[1] a yield of 7-12 MT of fruit per hectare can be obtained in existing forest areas. The yields are calculated on two hypothetical systems -- one with 100 trees per hectare, assuming some 70 KG of coco per tree; the other estimates yields based on 120 trees/HA and 100 KG/tree of coco. Consequently the available products breakdown would be as described in Table IV.

Any combination of the above improvements could result in a significant increase in the sectoral production. Note that the above hypothesis must be tested. Nevertheless, the history of agronomic domestication has shown that significant yield increases with time and research are the norm. With palms, the best example is the African Oil Palm, once only a wild tree in the forests of Africa. Wild yields of palms in the forest approach 870-2000 KG of fruits per hectare (125 plants per hectare) while domesticated, improved varieties of this same palm

[1]Native stand management costs in the Cerrado of Maranhão involving manual clearing of brush and thinning are about US $105/HA initially. Annual manual juvenile palm cutting to maintain pasture quality is about US $15/HA. Data compiled from farmers and CIMEC by Peter H. May.

TABLE IV. Hypothetical Production From Managed And Unmanaged Babassu Stands

Trees/HA	Fruit/Tree(KG)	Fruit/HA (KG)	Product Output/HA/Year (KG) Oil	Meal	Charcoal	Annual Prod. Value[a] per HA (US$)	Increase over Unmanaged Stands (%)
Current Yield (unmanaged stands)	20	2,000	80	60	400	US $ 135	0
100	70	7,000	280	210	1,400	US $ 470	250%
120	100	12,000	480	360	2,400	US $ 810	510%

[a]In final product prices prevailing in the first trimester of 1984 (US $1200/MT;US $ 100/MT cake; and US$ 80/MT charcoal).

yield 15,000-30,000+ KG of fruits per hectare in carefully managed plantations. Applying domestication technology and overall lessons learned from the African Oil Palm to babassu could result in substantially increased yields according to the experts interviewed. A theoretical yield table for a domesticated babassu plantation is provided in Table V.

TABLE V. Theoretical Yields Of Domesticated And Improved Babassu Palms[a] (In KG/HA)

KG Fruits Per Tree/Year:	40	80	125	150
Trees Per Hectare:				
115	4,600	9,200	14,375	17,250
160	6,400	12,800	20,000	24,000
205	8,200	16,400	25,625	30,750

[a]The spacing is based on a triangular system developed for African Oil Palm and allows 10, 8.5 and 7.5 meters between trees (115, 160, 205 trees/HA). Fruit yields are based on actual fruit weight per panicle recorded from individual trees during a 1981 study in Brazil (Balick and Frazão, unpublished data) and assume two panicles to be produced per palm each year, under the improved circumstances.

Using this table one can predict a minimum yield of 4,600 KG of babassu fruits in a planting density of 115 trees per hectare, assuming each tree produces two 20 KG panicles per year. Note that some trees observed produced 4-6 panicles per year, but this is clearly the exception. The yields in the table are theoretical but are achievable if plantation cultivation is considered. An important point is that the yield projections for cultivated stock based on numbers from wild yields in Brazil could be grossly understated, once proper cultivation techniques are worked out. As in the preceding paragraphs, the information concerning yields is hypothetical and must be tested to ensure accuracy.

PROCESSING

Other than the various "integral processing projects" (see page 29), the babassu fruit processing activity consists of the kernel pressing sector (for oil and cake/meal), and the cottage activities of kernel extraction, charcoal, oil, and flour production. Starting with the latter, the cottage-level oil and flour production has never been very substantial. Manioc, rice, and corn are widely available and are either purchased or produced by the peasant. In the case of the oil, very cheap soybean and other oils can now be purchased, and the peasant now has some cash income and geographic opportunity to spend it. Therefore, only charcoal remains as a cottage activity of some importance, i.e., as a domestic fuel for one's own use or to exchange with neighbors for other needed items or cash.

The pressing of kernels is a full-fledged regional industrial sector, so important that in the first half of the century it was "one of" or "the" most important industrial economic activity of Maranhão. Thus, large fortunes were made in babassu oil production (the number of processing plants grew to about 70 in the early 1970's). Since then the sector has suffered considerable shrinkage, and is still shrinking as a percentage of the state's GDP. The main reason for this is not so much reduction of gross margins, but rather the scarcity and high real cost of working capital. Furthermore, the astronomical

rates of inflation (currently at 220% per annum) are making management very difficult so that only the best managed factories will survive (by extremely efficient rotation of their working capital while keeping bank loans at a bare minimum)

Since kernels are available only 5 to 6 months a year and the variable cost of machinery is quite low, most plants have historically opted to install sufficient capacity to work some 7 to 8 months a year (storage of kernels was tried and discarded due to quality problems and lately due to the costs of working capital). Note that the installed crushing capacity exceeds the potential kernel harvest, of which only about 1/3 reaches the crusher (due to the large quantity of fruit in economically inaccessible stands). In recent years other oil seeds are becoming available in the area (e.g., soybean, cottonseed, and African Palm); therefore many of the efficient pressers are actively planning and experimenting with using their idle capacity in the off-season to maximize returns on their processing plants.

Practically all the babassu oil is sold in crude form to the soap industry which depends on this local supply due to protective barriers in the form of tariffs, import quotas, and dollar availability. A small part of oil is refined and used

for chemical and edible purposes. The press cake (5-10% oil content) and meal (1% oil content) are sold as animal feed. The meal is exported more frequently than the oil due to international prices that are relatively better than domestic market prices and fluctuate less. The oil is exported usually every fourth year due to an international coconut price cycle: the rain-drought cycles in Asia (Philippines, Sri Lanka, Indonesia, and Malaysia) and Oceania (New Guinea, Fiji and Mozambique), where the bulk of the world copra and lauric oil production is located, bring a sharp decrease in harvests (up to 20% of current production levels) every fourth year. This, of course, greatly affects the international prices. Consequently, the lauric oil price (usually around the US $0.15-0.20/LB level) increased to the US $0.50/LB level in 1973, 1979, and 1983. This price cycle seems to continue in spite of the advent of synthetic fatty alcohols, since they substitute only in part the natural coconut oils.

In general oil pressing and meal production is a very lucrative activity for those firms that are properly capitalized and professionally managed, even if the profits are no longer of the windfall type as in the early part of the century. Although it is difficult to obtain data on the profitability of individual factories, we estimate return on investment (ROI) of

the successful operations to be around 25%. The better-managed oil pressers do not depend on babassu kernels as their only raw material; they can modify their plants (in a short-time and at low cost) to process other oil seeds according to availability (cottonseed, soybean, and African Palm are the most likely alternatives). Because of this situation, the cash squeeze and the protected market position, the oil presser has relatively little incentive to consider an up-stream integration in order to insure his babassu kernel supply.

COMMERCIALIZATION

This section deals only with babassu (lauric) oil, soap, and meal in Brazil and international markets. Charcoal and other potentially marketable babassu products are treated in the "Integral Processing Projects" section.

Over the last three decades the industrialization of the oilseed sector has resulted in extremely attractive yields, especially in the African Palm and soybeans. Simultaneously medical experts and marketing campaigns have successfully promoted the "low cholesterol diet." The combination of the low costs and marketing have brought about an important food usage shift towards the more polyunsaturated oils.

The above situation has relegated the lauric and palmitic oils (coconut, babassu and African palm), to be used primarily in soap-making, toiletries, fatty acids, non-drying alkyd resins, and other specialized areas. The Brazilian soap market in 1983 was approximately 400,000 MT. Heavy-duty synthetic (HDS) detergent continues to grow in use as a substitute to the cheap or extruded soaps (approximately 40% of the cheap soap market has changed to HDS, and this trend continues, especially in urban areas). This substitution, however, has not had a major effect on the amount of lauric oil used in soaps. This is due to the need for lauric oils in higher quality soaps (Table VI).

TABLE VI. Proportional Use Of Lauric Oil In Brazilian Soap Manufacture

Soap Quality	% of Lauric Oil[a]
high	55-65
middle	50-55
low	35-50
extruded	15-30

[a]The variation is due to the other important content which is tallow. The lauric-tallow ratio is partially variable to adjust for price fluctuations, currently at 30-70 proportion.

From the above it seems that the domestic soap market needs at least 120,000 MT/YR of lauric oil. The exact babassu oil

figures for the last three years are not available, but several industrialists feel that the production levels are at 100,000-120,000 MT/YR. This level seems correct in view of some local coconut production[2] and sporadic small imports of lauric oils, on the average probably not exceeding 1,000 MT/YR (Table VII).

TABLE VII: Brazilian copra imports

Year	Copra Imports (MT)
1980	0
1981	1000
1982	1725

Source: Gessey-Lever; figures reported by Wilson Milfont, Jr.

The edible oil market for babassu oil is relatively small, probably representing a maximum of 20,000 MT/YR, and not growing.

[2]The 1982 Brazilian coconut production was reported to be 270,000 MT. The vast majority of this production is not used for coconut oil, but rather is sold unripe as a refreshment. The amount of copra produced in Brazil only amounts to about 2,000 MT, which would (if processed locally) give only some 1,000 MT of locally produced coconut oil. (Source: FAO, 1982 Production Yearbook).

The domestic lauric oil prices are usually higher (10-30%) than international prices. Such a situation is normal for most agricultural and industrial products, world-wide. The cake/meal production is below 100,000 MT/YR and is currently mostly consumed locally as press cake (with 5-10% oil content). Local consumption of babassu meal and cake is a fairly recent phenomenon. The recent Northeast Brazilian drought (1978-83) made it necessary for cattlemen to give feed to their normally range-fed herds. The meal and cake exports dropped precipitously during the drought, but appear to be on the rise now that the drought is over (Table VIII).

TABLE VIII: Babassu Kernel Press Cake And Meal Exports (Maranhão)

Year	Cake and Meal Exports (MT)
1979	67,000
1980	47,000
1981	25,000
1982	20,000
1983	24,000

SOURCE: CACEX, reported by Peter May.

Small quantities of babassu oil are exported when international prices are favorable, which is about every four years. The 1983 reported exports of babassu products are shown in Table IX.

TABLE IX: Babassu Product Exports (1983)
From Maranhão

Product	Metric Tons	US$/LB FOB	Millions of US$
oil	9,489	.32	6,696,719
cake	10,866	.035	841,403
meal	13,900	.034	1,036,342
Total exports (millions of US$)			8,574,464

SOURCE: CACEX; reported by Peter H. May.

In contrast, the 1982 U.S. market for lauric oil was 376,000 MT, of which 153,000 MT was for food, mainly margarine, and the rest (230,000 MT) was for soap and other uses.

It appears that the U.S. and the other international markets could absorb additional quantities of Brazilian babassu oil on a regular basis: the order of magnitude could be 20-50,000 MT/year (US$25-70 million at recent (June, 1984) prices). These exports would not significantly affect world price levels since they would represent some 2-4% of total world coconut oil exports (see Tables X and XI). However, coconut oil prices (which control the lauric oil market) have rather wide swings in the international markets (see page 22). Thus the potential for babassu to figure as a permanent part of international lauric oils markets depends on the producers and processors having the capital and organization to deal with a fluctuating world price.

Table X

SELECTED MONTHLY PRICES AND RATIOS

ITEM	UNIT	JUN 1983	JUL 1983	AUG 1983	SEP 1983	OCT 1983	NOV 1983	DEC 1983	JAN 1984	FEB 1984	MAR 1984	APR 1984	MAY 1984	JUN 1984	PERCENT CHANGE LAST MO.	PERCENT CHANGE LAST YR.
SOYBEANS:	Farm ($/MT)	217	230	278	304	292	287	284	288	268	282	287	298	281	-5.6	29.5
	Ill. Crusher ($/MT)	223	242	311	328	311	301	285	282	271	293	293	316	283	-10.3	26.9
	Rotterdam ($/MT)	243	263	339	350	329	324	311	305	293	314	315	338	308	-8.8	26.7
	Japan 1/(1,000 Y/MT)	63.7	65.0	65.3	67.3	74.1	80.1	81.0	81.2	81.3	75.1	70.8	74.4	2/	2/	2/
SOY MEAL:	Decatur ($/MT)	194	211	258	257	251	248	241	222	205	216	208	208	192	-7.6	-0.9
	Rotterdam ($/MT)	210	226	279	277	267	265	256	237	221	229	220	219	202	-7.7	-3.7
	Rotterdam (ECU/MT)	237	255	333	330	309	310	306	296	265	270	260	268	244	-8.9	3.0
	Japan 1/(1,000 Y/MT)	58.3	56.9	60.6	56.8	66.6	68.9	73.1	72.3	69.7	52.8	51.6	2/	2/	2/	2/
SOY OIL:	Decatur ($/MT)	428	478	665	756	675	619	605	624	600	664	706	857	791	-7.6	84.8
	Rotterdam ($/MT)	425	477	651	736	687	652	644	692	669	720	772	914	844	-7.6	98.6
CORN:	Farm ($/MT)	120	123	132	131	124	125	124	124	122	126	131	131	132	0.8	10.0
	Rotterdam ($/MT)	220	219	202	199	205	203	200	197	198	217	217	209	213	1.9	-3.1
	Rotterdam (ECU/MT)	248	247	239	237	237	238	241	247	238	256	256	256	258	0.8	4.0
	Japan 1/(1,000 Y/MT)	35.5	37.0	37.6	37.8	36.7	37.2	38.2	38.1	38.6	38.0	36.8	37.3	2/	2/	2/
PALM OIL:	U.S. ($/MT)	429	453	578	674	655	670	731	975	843	800	814	947	800	-15.4	86.5
	Europe ($/MT)	394	425	559	645	671	661	695	875	875	845	841	951	783	-17.6	98.7
COCONUT OIL:	U.S. ($/MT)	693	826	992	959	868	088	996	1,076	1,155	1,119	1,091	1,269	1,290	1.7	86.1
	Europe ($/MT)	694	846	985	954	860	884	969	1,069	1,158	1,123	1,150	1,314	1,431	8.9	106.2
SOYBEAN OIL DISCOUNT TO:																
Palm oil	U.S. ($/MT)	1	-25	-87	-82	-20	51	126	351	243	136	108	90	9	-89.9	800.0
	Europe ($/MT)	-31	-52	-92	-91	-16	9	51	183	206	125	69	37	-61	-264.8	96.8
Coconut oil:	U.S. ($/MT)	265	348	327	203	193	269	391	452	555	455	385	412	499	21.1	88.3
	Europe ($/MT)	269	369	334	218	173	232	325	377	489	403	378	400	587	46.8	118.2
SOYBEANS/CORN:	U.S. 3/	1.94	2.00	2.26	2.49	2.53	2.46	2.46	2.49	2.34	2.39	2.36	2.43	2.28	-6.1	17.5
SOY OIL/CORN:	U.S.	3.57	3.88	5.04	5.77	5.44	4.96	4.88	5.03	4.90	5.25	5.40	6.52	5.98	-8.2	67.5
	EC	1.93	2.18	3.22	3.70	3.35	3.21	3.22	3.51	3.38	3.32	3.56	4.37	3.96	-9.3	105.2
SOY MEAL/CORN:	U.S.	1.62	1.72	1.95	1.96	2.02	1.98	1.94	1.79	1.68	1.71	1.59	1.59	1.45	-8.7	-10.4
	EC	.95	1.03	1.38	1.39	1.30	1.31	1.28	1.20	1.12	1.06	1.01	1.05	.95	-9.4	0.0
	Japan 1/	1.64	1.54	1.61	1.50	1.82	1.85	1.92	1.90	1.81	1.42	1.40	2/	2/	2/	2/
FEED PROFITABILITY: 4/																
	U.S. (1910/14=100)	1.29	1.26	1.22	1.17	1.16	1.14	1.21	1.26	1.28	1.28	1.27	1.23	1.21	-1.5	-6.1
CRUSH MARGIN:	U.S. (dol.)	10	11	15	15	14	9	17	10	4	2	4	10	18	80.0	80.0
	Rotterdam (dol.) 5/	3	2	2	5	11	5	11	11	8	2	4	8	11	37.5	266.7
SOY OIL PRODUCT VALUE (Percent)		33.4	34.2	36.9	37.7	37.8	36.5	37.0	40.9	41.9	43.0	45.8	50.2	50.3	0.2	50.6
TRADE WEIGHTED $ EXCHANGE RATE FOR SOYBEANS (Apr. 1971=100)		143.7	145.8	149.1	149.3	148.8	152.3	155.3	157.5	155.1	152.9	155.6	162.7	163.0	0.2	13.4

1/ Unit value of imports. 2/ Not available. 3/ Per bushel basis. 4/ Index of prices received by farmers for livestock and livestock products divided by the index of prices paid by farmers for feed. 5/ Soybean oil and meal prices multiplied by U.S. extraction rates for respective month, less soybean price.

Sources: Statistical Reporting Service, Wall Street Journal, Economic Research Service, Grain Market News, Oil World, Reuters News Service

Foreign Agricultural Service
Oilseeds and Products

Date: July 1984

Table XI

World Copra Production by Principal Countries In Thousands of Metric Tons

Year	Dom.-Rep.	Fiji	India	Indonesia	Jamaica	Malaysia	Mexico	Mozambique	Papua-New Guinea	Philippines	Solomon Isl.	Sri Lanka	Tanzania	Thailand	Vanuatu	Venezuela	Vietnam	Tons World Total
1973	15	28	345	797	13	216	118	69	125	1,808	16	100	27	38	22	19	20	3,904
1974	16	27	339	801	15	202	135	64	137	1,376	29	109	27	39	35	18	23	3,514
1975	20	26	349	947	18	234	140	63	140	2,206	25	203	27	39	27	18	23	4,636
1976	20	29	354	1,216	20	231	125	83	113	2,715	24	157	27	43	36	18	23	5,366
1977	20	30	334	1,022	21	218	120	80	139	2,449	29	73	27	39	44	19	23	5,164
1978	21	27	332	1,262	24	207	135	75	141	2,468	28	131	27	40	47	19	23	4,377
1979	21	30	317	1,296	28	213	130	60	159	1,823	34	166	27	41	45	19	23	4,835
1980	21	30	333	1,394	29	210	110	60	145	1,931	30	93	27	45	50	20	23	4,925
1981[1]	21	30	337	1,331	25	208	120	60	138	2,331	30	138	27	45	50	20	23	4,843
1982[2]	21	30	340	1,389	28	200	120	60	150	2,558	30	140	27	45	50	20	20	4,950

[1] Preliminary. [2] Forecast Source: *Foreign Agricultural Service, U.S.D.A* T.109

Source: FAO, 1983.

INTEGRAL PROCESSING PROJECTS

By making use of the full range of by-products that can be obtained from babassu, kernel oil may be able to secure a greater position in international trade. Technology exists which does

utilize the entire babassu fruit to produce a variety of industrial products. This is known as integral processing. A flow chart of the wide range of potential products is presented in Figure 3. This should be contrasted with the chart presented under traditional processing (Fig. 1). The results of this technological development are discussed in the present section.

The existence of the huge natural resource in the form of wild babassu forests has motivated several folkloric or quixotic efforts. In 1974 a U.S. petroleum engineer set up a pilot plant in Coroatá, Maranhão, to produce coke and a liquid hydrocarbon fuel. Even earlier, the United Fruit Company studied a large project to develop babassu for oil and cake together with cotton gin, textile mill, rice, and community development. The proposal was developed by Harvard Business School professors and was based on an US $8,500,000 investment. These efforts are representative of hundreds of ventures that never got off the ground.

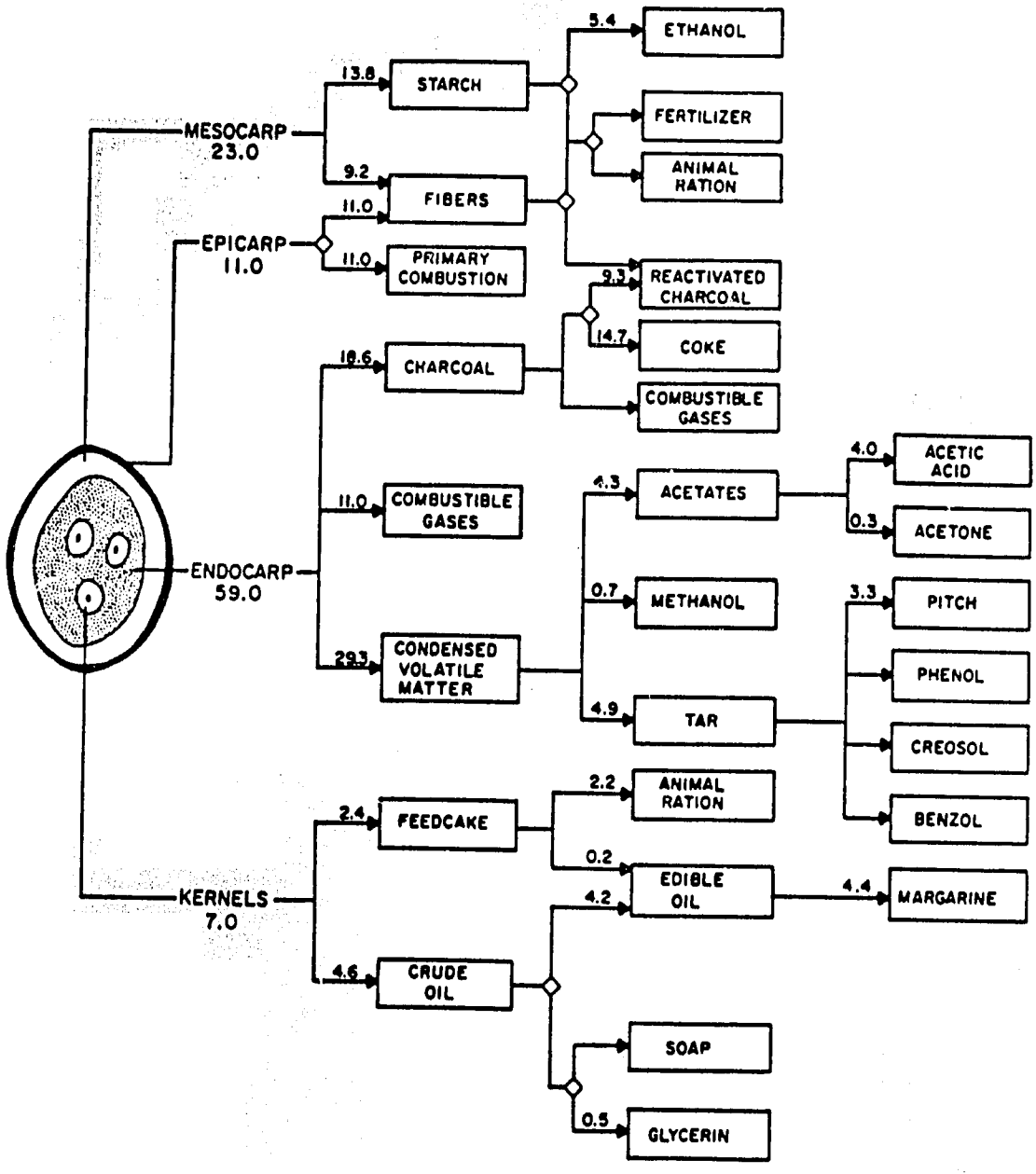

Figure 3. Flowchart of products derivable from babassu fruits via current (1983) technology. Diamonds represent "either-or" options. Numbers are percent of fruit weight. Adapted from Abreu (1940), Viveiros (1943) Escola Técnica Federal do Maranhão (1976), IPT (1979), and Mendes and Carioca (1981). From Anderson and Anderson (1983). Used with permission of the authors.

Three integral processing projects (Agrima, CIT/EIB, Tobasa) and one charcoal project (IPT) reached advanced stages. They were all initiated during 1973 and 1979, the period when the Brazilian "miracle" was being fueled by massive dollar loans. Thus, capital was available and the government was actively financing (with extremely high leverage and low real capital cost) venture for the production of local substitutes for the very expensive imported hydrocarbons.

Agrima

Promoted since 1972, Agrima reached the pilot plant stage, and terminated in 1981 when additional capital, through equity and loans, was not raised. The project was based on 1,000,000 MT/YR of fruit. A third or more of the fruit was to come from company owned lands, the rest to be acquired from others. Even at an average of 2 MT/HA of fruit, this would mean that the company had to own some 150,000 HA of babassu-producing land, which was not the case. Plant location was designed to optimize an elaborate collection system and storage at collection centers. This was supposed to ensure steady supply over the entire year and thus eliminate the problem of seasonality. Several peeling, separating, and breaking machines were tested. Some funds were invested in by-product manufacture, especially acetic acid

(Dr. Othmer) and charcoal. Mr. Akira Kono, an economist who worked extensively on this project, now believes that 75,000-200,000 MT/YR would have been sufficient for a profitable venture.

CIT/EIB (Companhia Industrial Tecnica/Empresa Industrial de Bacabal). The two projects have different owners and CIT is ten times larger, but they are technically and operationally very similar. Both projects reached a similar operational stage and operated for four years, (1978-1982) and then shut down, dedicating themselves to charcoal production and resale (mostly purchasing, cleaning, bagging, and selling peasant-made charcoal).

The CIT project consists of three plants, one for 50,000 MT and two for 25,000 MT each, for a total of 100,000 MT/YR of fruit processing capacity.[3] The company owns some 13,000 HA of land which supply 26,000 MT or 25% of the fruit processed. The machinery consists of chain-hammer mills for de-husking, centrifugal breaker, flotation separation of kernels from the endocarp, and rotary charcoal kilns. It was mostly designed and constructed by José Monteiro Nunes Leitão, a former partner. According to the company management the reason for the plant's shutdown (due to operational losses) is the insurmountable material movement problem in the plant -- both very expensive and non-functioning.

---

[3]CIT also had its own oil crushing operation (an old mill in Santa Rita, Maranhão bought from the owner).

CIT is now finishing a study which recommends a new project on the same site in Bacabal. The new project would start with 100,000 MT/YR of fruit and expand into 200,000 MT/YR in three years (expansion financed from earnings). The investment is roughly US $25 million for phase I and US $10 million for phase II. Total sales in full production should be US $20 million/YR, (8,000 MT oil, 12,000 MT meal, 26,000 MT charcoal, 36,000 MT mesocarp, flour, and an unknown quantity of tar). The capital structure calls for 17% from private shareholders, 52% from FINOR (government tax reinvestment fund) as the equity, and the rest (31%) from SUDENE[4]-approved (Banco do Nordeste and Banco de Desenvolvimento Econômico) loans at 12%/YR real interest. Currently CIT is 41% owned by the EIT group (Empresa Industrial Técnico -- a major Northeast Brazil construction and agribusiness firm) which does not intend to enter the new project, but would remain as a shareholder with reduced equity.

The EIB belongs to Mr. Junior Edson de Paula, private entrepreneur. The plant is designed in theory to process some 9,000 MT/YR of fruit to yield 140 MT/YR of starch, 300 MT of oil, 200 MT of cake, 900 MT of fertilizer, and 2,600 MT of charcoal.

---

[4]SUDENE - Superintêndencia para o Desenvolvimento do Nordeste do Brasil - Northeast Development Planning Agency.

It is now shut down, except for charcoal production, and it is very similar in design and concept to CIT.

Tobasa

Situated in Tocantinópolis, Goiás, Tobasa belongs to a family (Barouch Bros.) of agricultural industrialists with experience in oil pressing. The plant is designed for 100-200,000 MT/YR of fruit processing and is only 60% completed. The government, through SUDAM,[5] has reportedly lent some US $40 million for this project. The design is quite grandiose, especially in large storage silos and distillation facilities. Informed sources express little probability for further funds being available for this project.

IPT (Instituto de Pesquisas Tecnológicas - Teresina, Piauí)
This venture was aimed at charcoal and combustible tar production only and reached the pilot plant level. In its initial concept it would have spaced husk collection points along the banks of the Parnaiba River. These husks could be stored and transported by barge later on to a centralized processing center. This has yet to be proven viable due to sand bars that have to be dredged,

---

[5]SUDAM - Superintêndencia para o Desenvolvimento da Amazônia - Amazonian Development Planning Authority.

and the reluctance of breakers to sell husk. The pilot plant possesses a 500 MT/month husk processing capacity. It can produce about 200 MT/month of unconformed charcoal and 125 MT/month of refined combustible tar using a rotating vertical kiln. The charcoal is being sold to southern foundries and auto manufacturers. Tests of a tar-bound cured briquette are underway for marketing to the steel and pig-iron industry. The firm currently plans to triple the plant scale with support from IPT (São Paulo), The State Government of São Paulo, FINEP (Federal Investment Project Fund) and the State of Piauí.

It should be noted that charcoal made in rudimentary kilns by peasants and local farmers is acquiring importance as a marketable product. This cottage and neo-industrial production is growing rapidly, and is supplying fuel to local cement factories and foundries. The 1983 production for market was estimated to be in excess of 15,000 MT. However, most husks from which kernels are extracted are converted to charcoal for domestic fuel use.

None of the integral projects has become an ongoing commercial venture, even though corrections are being implemented, and IPT is actively expanding. The reasons for the relative lack of success are:

1. Poor management. The promoters were motivated by the available government financing, but did not invest in first-class management[6], neither at the top levels or at local day-to-day management levels.

2. Lack of proven technology. There is, even today, no proven technology in fruit storage, or charcoal, tar, fuel, starch, and alcohol production. Only the de-husking, breaking, and separation process has been reasonably "solved."

3. Lack of capital. Once the government funding (originally motivated by a quest for inexpensive biomass fuels) ceased to flow (due to a decision to consolidate gains made in sugarcane-based ethanol production) the babassu project promoters could not convince private investors and lenders to risk their capital.

Had the projects continued to develop they would have most probably encountered further difficulties in raw material supply and marketing of by-products. As a coda it should be mentioned that none of the projects considered, at any depth, the social impact on the peasant in case of a commercial success.

---

[6]Northeast Brazil is not an ideal place for attracting top management talent.

ECONOMIC SIGNIFICANCE OF CURRENT INDUSTRY

A lot of calculations could be undertaken which would probably not be very useful since they would consist of applying exact methods to very inexact (variable and incomplete) data. Therefore, again, this section should be perceived as conceptual only.

1. Peasant. Over the 1983/84 harvest they sold their kernels (approx. 300,000 MT) at prices that varied from US $0.25-$0.50/KG, (peak of season) resulting in an average income of US $170 per household over the five month harvest. Total income was approximately US $75.000.000.

2. Merchant. On the basis of the same quantity (300,000 MT), the merchants grossed US $0.05-0.15/KG of kernels. From this they paid transport, administration, and other costs. Their gross margins were approximately US $30,000,000, of which probably one third was net profit.

3. Landowner. The amounts of profit vary depending on whether he sells directly to the oil presser or to the merchant. Also, different owners use different commercial tactics with the peasants. Thus, it seems that the margins received by the landowners are in the range of 10-40% of the final kernel price or approximately US $0.05-0.20/KG, averaging perhaps US $0.10/KG. Note that this margin is in fact a net profit. It is difficult to estimate what

part of the kernels pass through the landowners, but assuming it is 50% of the total production (it is probably at least this high) then the owners would receive some US $15,000,000. Also they have additional profits from the sale of food to the peasants (usually with 15% profit) in exchange for kernels.

4. Oil Presser. In 1984 300,000 MT of kernels yielded 120,000 MT of oil and 90,000 MT of meal/cake which was sold at peak prices of US $1200 MT of oil and US $100 MT of cake, giving gross revenues of approximately US $150,000,000 (gross profit of some $40,000,000 on average kernel purchase price of approx. US $0.38 per KG) to the industry. The more efficient pressers made handsome profits, probably exceeding 10% on sales and 25% ROI, but the less efficient industrialists teetered on the verge of bankruptcy, due to lack (and high cost) of working capital (all prices based on 1983/84 harvest).

It can be concluded that the approximate economic impact of the babassu sector (80% of which is in Maranhão) is the following: since there is little or no plantation cost then the value added per year is approximately US $150,000,000; $75,000,000 to peasants; $30,000,000 to merchants: $6,000,000 to landowners, and $40,000,000 gross profit to pressers.

FUTURE FOCALIZATIONS

The babassu resource consists of the extensive and homogenous forests and hundreds of thousands of landless peasants which, in spite of relatively low yields as compared to modern industrialized agricultural oil seed crops, make economic exploitation feasible. The babassu vegetable oil industry is the largest in the world which has a wild plant as its base. The labor-intensive kernel collecting and breaking has established a sociological pattern which has influenced greatly the localization and form of dwellings, work habits, and other aspects of indigenous life. This pattern continued as long as the Northeast was an insular region, relatively little integrated to the rest of the country.

The socio-economic transformation described in the Introduction is going on. The effect on the babassu is definitely one of a decreasing role both at the peasant and industrial level. The integral processing projects which appeared to support a transformation from cottage to plantation activity have failed. The present outlook for the babassu appears to be a gradual disappearance, caused by the progress of large mechanized farming, peasant migration, peasant income from other sources, climatic changes, regional availability of other oil seeds, and other factors. However there is significant potential in the babassu sector for charcoal production. Economic activity in charcoal has

grown in size and reached a semi-industrial stage. With respect to charcoal markets, there is unquestionably an opportunity to sell large quantities (hundreds of thousands of tons) if the quality and price are right. The quality required varies greatly with the use (most important uses are cement, steel, alloys, metallurgy, and household). The prices are attractive enough to constitute an incentive for further investment. The raw material collection and technology are still the unknown factors.

Should, and could some actions be taken to reverse this general negative trend? Some policymakers and scientists firmly believe that there are valid, long-range reasons to save the babassu and even to try to introduce it to other tropical regions of the planet. Stabilization and improvement of degraded ecosystems and climate, broadening of the base of crop production, improving the nutritional composition of the diet, a potential contribution to fuel (biomass) production and the dependence of the often landless peasant on the palm for food, fuel, shelter, medicine, and other products are all reasons for saving and improving the babassu resource. "Babassu grows like a weed and has a lot of useful products, that is the reason to fight for its survival" (Peter May, pers. comm.).

We are now confronted with a process which we wish very much to reverse, however, this cannot be ordered, legislated, or bought. Natural processes can only be reversed by equally powerful measures.

Mechanized agriculture and other development activities steadily reduce the babassu palm populations each year. So far this has not affected babassu oil production which has remained more or less stationary. However, the stands and the grazing-babassu farms are in fact decreasing. Therefore, in order to reverse this trend, it is necessary to make the babassu again an economically attractive venture. Since time cannot be recuperated, this reversal must be brought about by using the fruit more completely. This, in turn, will serve as an incentive to increase yields per hectare. Thus, a well-designed babassu agribusiness commodity system (see Fig. 4) is the only manner in which this can continue to exist as an important agricultural and economic element in the region. Finally, it should be clear that the key to babassu lies in the state of Maranhão where 80% of the fruit harvest comes from, where the oil pressers are, and, most importantly, where socially, culturally and economically, babassu is an integral part of local life.

SUGGESTED ACTIONS

The actions discussed are presented, first conceptually (what to do) and then operationally (when and how to do it).

1. Yield Improvements via continuing and strengthening existing botanical (germ plasm bank) and agronomic research, and extension programs. Special emphasis should be placed on assuring

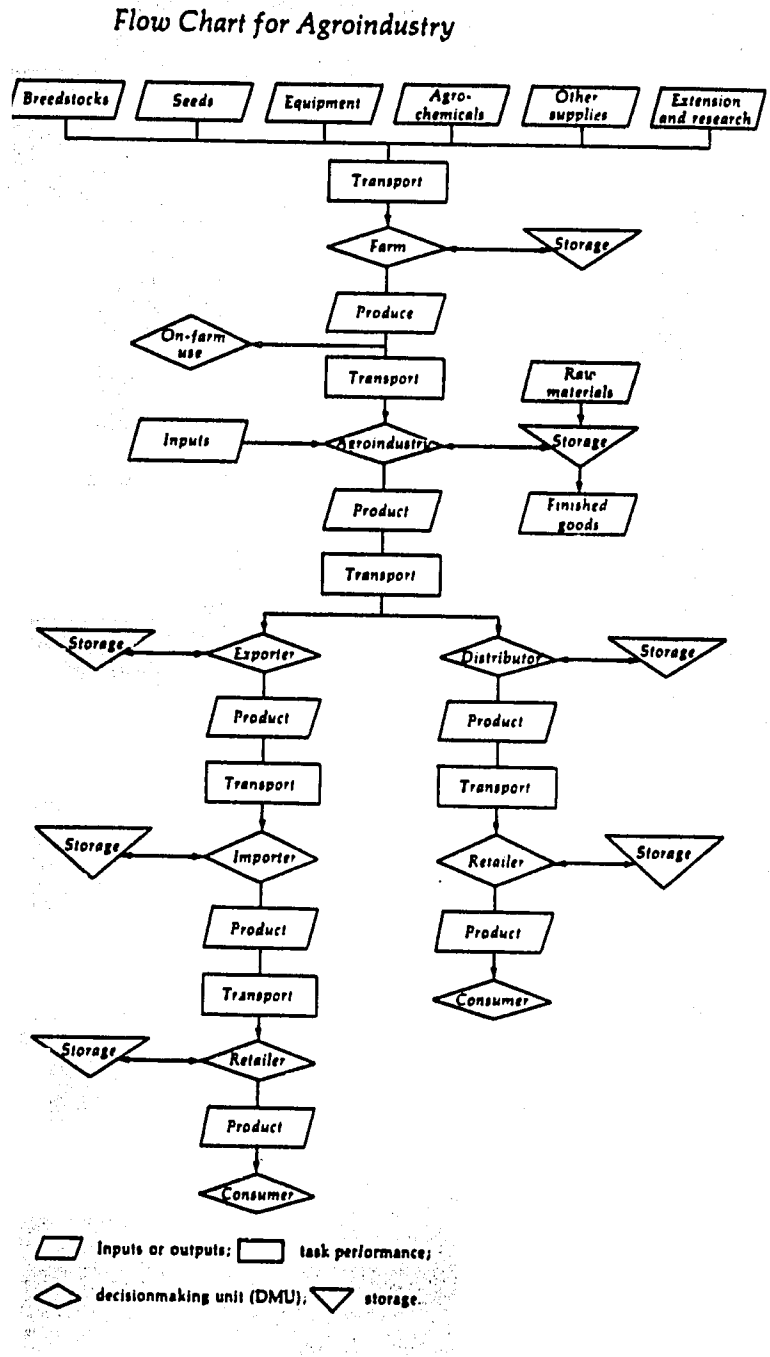

Fig. 4. Flowchart for agroindustry. From Austin (1981). Copyright 1983 by the International Bank for Reconstruction and Development, published by the Johns Hopkins University Press. Reprinted with permission.

funding and supervision for long term efforts (10-20 years) in order to obtain relevant results. Pilot projects should be carried out experimenting with density of trees, different producing regions, increasing production of female vs. male flowers, and selection of superior varieties.

2. Accessibility and Availability should be increased by improving access to areas where the babassu would be protected from deforestation practices. Perhaps this could be done by building and maintaining paths where light vehicles (with balloon tires) or cargo animals could pass to handle the fruit. In this manner the harvests could be greatly increased, perhaps by as much as 50% since these new means of access would allow collection of fruit which is not currently reachable.

3. Venture Capital will be needed to carry out field and processing pilot projects.

4. Management will have to be secured by attracting first-class entrepreneurs who will be able to reap great rewards, but only if successful.

5. New Technology will have to be quickly and reliably developed at pilot plant and industrial scale for charcoal, tar, storage of coco, and later starch/alcohol.

ACTION PLAN

I. Long Term (10-20 years)

A. Lobbying effort through existing and/or new institutions on Federal and State level. Formation of a conservation-policy-watchdog organization similar to the Sierra Club should be considered. The objective should be the creation of new legal instruments which would allow for enforcing existing legislation and creating new ones regarding babassu-cattle regions (zones of babassu-cattle agroforestry suitability). Other lobbying efforts could be aimed toward government support of babassu production either by direct subsidies or a national policy decision to hold back production of commodities competitive with babassu. With the economic problems in the northeast aggravated greatly by the recent five year drought, a strong lobby could make the point that babassu is a strategic resource for the northeast region, especially in time of scarcity and therefore must be protected over the long term. Interestingly enough, babassu assumes a greater importance as a food and economic product in times of drought or economic upheaval.

B. Botanical-Agricultural Research and Development Program. This effort could be co-financed by bilateral and multilateral international development assistance agencies, and the Federal Government of Brazil. The funding should be channeled

through an appropriate institution having limited links to short-term political factors. Activities such as this are now being carried out by collaborative US/Brazilian research efforts aimed at domesticating the palm.

C. Harvesting Systems. Investigate the feasibility of international foundation or bank funding of grower (harvester) cooperatives. Organizing the peasants into cooperatives or other self-help units could have a role in strengthening their economic position and stabilizing their lifestyles, thus impacting on such problems as rural migration.

II. Medium Term (1-3 years) Industrial Project.

Promote one or more integral processing projects which would not repeat past mistakes. (In this sense the CIT expansion project proposal seems fantastically oversized in capital, while underrating the needs to solve technical problems before building industrial plants.) Such a project could probably be viable with an investment of about $1-2 million. It should have the following features:

A. Top level general manager who should participate in 10-25% of earnings with a possibility to acquire an important equity position.

B. Solid board of directors who would guarantee financial backing and monitor the operation.

C. Reduction of the number of unknown factors to a minimum; thus the plant should be started only as a dehusking, separating and breaking operation[7], selling the kernels to oil pressers and making charcoal in a conventional form.

D. Research and pilot work should be set-up separately with the following agenda which should be carefully designed and monitored for time/cost limits:

1. Detailed study of all past research (2 months).

2. Research into fruit storage (2 years).

3. Research into making various grades of industrial and household charcoal[8] (1 year). Particular attention should be paid to the grade of charcoal needed for the Carajás mineral extraction and production project and investigate this as a potential market.

4. Tar distillation and use as briquette binder (2 years or less, depending upon success and scale-adaptation of IPT venture in Teresina).

5. Mesocarp blending into meal/cake for export markets.

6. Starch and alcohol production to be started only after the above are successful or specific funding is obtained for this purpose.

---

[7]Some existing machinery and plants could possibly be used. The initial size should probably be some 100,000 MT/YR of fruit, which would make it economically viable, but not too large to create a problem with raw material supply.

[8]Local and international markets can easily absorb all charcoal produced from the babassu (over 1,000,000 MT/YR) if the quality is correct for each specific use.

The recommended research and pilot actions could be carried out by securing one or several Brazilian investors and possibly some international investors such as Denpasa (Dende do Pará, S.A., a joint venture of Brazilian investors and a Dutch group that runs a highly successful African Oil Palm project in Pará).

E. Securing local government financing through regaining credibility in financial feasibility of the babassu; this could be tried by incorporating Petrobras (via their charcoal and alcohol interest) as a partner/client/or supporter.

F. Using the services of the most qualified experts for the technological/R&D work. (E.g., José Oswaldo Carioca of the Universidade Federal do Ceará who has done much work on alcohol production from the mesocarp.)

G. Finding the best local management talent to run the factory and the company (possibly by attracting an efficient oil-presser to become a partner-manager).

H. Appointing a project-promoter to develop a sound business plan and put the above activities into motion.

DEVELOPMENT OF BABASSU ELSEWHERE IN THE TROPICS

This report focused on Brazil because it is the center of current babassu activity. Babassu represents only one or two species of the genus Orbignya, a group of palms found in Mexico and throughout much of Central and South America. For example, the same species of babassu that is found in Maranhão is also found in Bolivia. There are vast belts of these palms in Bolivia and these were once widely exploited on a commercial scale but today are more a subsistence product (but an important one) as sources of construction materials, fiber, thatch, fuel, medicine, food and oil. Several studies were undertaken in the past in Bolivia to assess the feasibility of redeveloping the babassu industry, based on the Brazilian model[9]. Bolivia is a much poorer country and has a greater dependence on the harvest of raw materials from the native forests than Brazil. A development project in Bolivia would seem feasible also, but would lack the infrastructure that already exists in Maranhão--economic. social and scientific.

Mexico is a country where the active exploitation of a babassu relative (Orbignya cohune) is presently going on. The primary use for this palm, known as "cohune" is as a substitute for coconut oil in soapmaking. There is at least one factory in Guadalajara that

---

[9]See Schickert (1977) and Consultores del Plata (1973).

is currently pressing cohune kernels, when available, for the manufacture of soap. This same type of palm kernel has been pressed in Honduras for oil, but the current state of the operation is unknown.

An outline of a proposal for the establishment of a babassu plantation follows.

BABASSU PLANTATION PROJECT PROPOSAL

Objectives

1. To prove that babassu plantations are an economically viable proposition.
2. To improve babassu yields through long-term systematic application of botanical and agronomic methodology.
3. To prove that babassu can be successfully grown in regions other than its natural habitat.

Description

Some 4000 HA could be developed as a babassu plantation in the Amazonian part of Brazil, Peru, Colombia, or Bolivia. After eight years the plantation would be covered with some 600,000 babassu palms, varying in density of 100-200 trees/HA. These stands would produce a minimum of 25,000 MT of fruit per year, resulting in 1,000 MT of lauric oil, 750 MT of animal feed, and 5,000 MT of charcoal.

The dehusking, cleaning and breaking of the coco as well as the charcoal production would be done mechanically at the plantation. The kernels would be shipped to conventional oilseed crushers (part might be used in small scale oil crushers for edible purposes). The animal feed would be used internally as well as part of the charcoal (the rest of which would be sold). The plantation would develop and help support a herd of some 8,000 head of cattle. Furthermore, it would grow various cash crops such as corn, cassava, squash, etc., both for food and cash flow purposes.

The scientific aspect of the plantation would consist of developing seedlings, new varieties, and developing the most effective agronomical methods to optimize yields of babassu trees.

Financing

In order to achieve the desired objectives, the project would have to exist some 25 years (note that the plantation would probably last 50-75 years). Furthermore, it is assumed that financial support would be needed only for the initial ten years, after which the plantation would exist as a financially successful venture.

It is estimated that the initial clearing and infrastructure set up could be accomplished with US $4 million investment. The ongoing expense of approximately US $1 million per year could be financed

through the proceeds of a Clifford type trust (established with US $10 million - yearly income which goes to the plantation and the principal reverts to the owner at the end of the tenth year).

The backers of the project could come from the host country government, U.S. Government agencies, international agencies, private foundations, and private business. Obviously, a successful project would be a highly attractive experience for both business and government.

Conclusion

There is a great deal of opportunity in this sector of the oilseed and energy industries, and with these palms. It will take a lot of hard work, capital, vision and persistence to fully harvest babassu's bounty, but this is attainable.

BIBLIOGRAPHY

S. F. Abreu: O Coco Babaçu e o Problema do Combustível. Segunda edição. Instituto Nacional de Tecnologia, Rio de Janeiro, Brasil, 1940.

A. B. and E. S. Anderson: People and the Palm Forest. University of Florida, February, 1983.

F. Cavalcante de Andrade: "Economia do Babaçu." Governo do Maranhão, SICT, April 1978.

J. E. Austin: Agroindustrial Project Analysis. John Hopkins University Press, 1981.

M. J. Balick: "Amazonian Oil Palms of Promise: A Survey", Economic Botany 33(1) 11-28, 1979.

Consultores del Plata - ECOTEC Consultores: "Diez Proyectos Agro-Industriales" (Estudio de Mercado de Exportacion - Mercado de Argentina para Aceite de Cusi)." Comite Departamental de Obras Publices, Santa Cruz de la Sierra, Bolivia, 1973.

Escola Técnica Federal do Maranhão: Babaçu: Industrializaço Total. São Luis, Brasil, 1976.

FAO/UN: 1982 Production Yearbook. Vol. 36, Rome, 1983

IBGE: Anuário Estatístico, 1982. Rio de Janeiro, 1983.

IPT: Análise Tecnológica, Econômica e Social do Aproveitamento Integral do Coco de Babaçu, 2 volumes. Instituto de Pesquisas Tecnológicas do Estado de São Paulo, São Paulo, Brasil, 1979.

R. H. Kirby: "A Survey of the Babassu Nut Problem in Brazil with Recommendations for the Better Utilization of the Palms and By-Products from the Fruits," FAO, Rome, 1964.

Peter H. May: "Profile of the Babassu Oil Industry." Unpublished paper.

_____. "The Economy of the Babassu Industry: Myths and Realities." Paper presented to an FAO Seminar on Underutilized Palms of Latin America, São Luís, Maranhão, August 1983. Published in Spanish as "La Economia Industrial y Agricola de la Palma Babasu: Mitos y Realidades" In Anon. Palmeras Poco Utilizadas de America Tropical, FAO/CATIE, Turrialba, Costa Rica, 1983.

Peter H. May, A. B. Anderson, M. J. Balick, J.M.F. Frazão: "Subsistence Benefits from the Babassu Palm (Orbignya martiana)" Economic Botany 39(2) 113-129, 1985.

K. S. Markley: "Report of the Babassu Oil Palm Industry in Brazil," U.S. AID, July, 1963.

A. M. de C. Mendes and J. O. B. Carioca: Babaçu. Volume 3 in Estudo Integrado do uso Potencial de Biomassa, para fins Energéticos no Brasil. IPT-CAEEB, Fortaleza, Brasil, Mimeograph, 1981.

MIC/STI: Mapeamento da Ocorrência dos Babaçuais. Ministério de Indústria e Comércio - STI, 1982.

W. Milfont: "Alcool de Babaçu: Potencial e Viabilidade." Presented at Conference on Fermentation, Viçosa, Minas Gerais, 1982.

B. N. Plumb and G. Lodge: The United Fruit Company and the Maranhão Development Corporation." Harvard Business School Case Study, 1969.

G. Schickert: "El Mercado de Cusi/Babassu y de sus Productos Derivados en la Republica Federal de Alemania, Holanda, Belgica, y Luxemburgo." Entwicklungsberatung GMBH Dusseldorf, Mayo 1977.

FAS/USDA: Foreign Agricultural Circular, Oilseeds and Products. July 1984, Foreign Agricultural Service, United States Department of Agriculture, Washington, D.C., 1984.

ERS/USDA: Agricultural Prices. Sept. 28, 1984, Crop Reporting Board, Statistical Reporting Service, United States Department of Agriculture, Washington, D.C., 1984.

J. W. Bautista Vidal: "Coco de Babaçu, Matéria Prima Para Produção de Alcool e Carvão." Ministério de Industria e Comércio, STI, July 1977.

F. F. Viveiros: O. Babaçu nos Estados do Maranhão e Piauí. Boletim do Ministério de Agricultura, Rio de Janeiro, Brasil: 32: 1-43, 1943.

APPENDIX I
PERSONS INTERVIEWED

1. Alfonso Americo de Medeiros (Director of CIT)
2. Raimundo Coutinho (large kernel merchant, Bacabal)
3. José Mário Frazão (Agronomist, currently a researcher at EMBRAPA - Teresina, Piauí)
4. Warwick Kerr (professor of genetics and entomology, Chairman of Biology Department, Universidade Federal do Maranhão.)
5. Akira Kono (ex-project manager of AGRIMA)
6. Mario Leal (Head of SUDENE, Maranhão)
7. Peter H. May (Ph.D candidate, Cornell University; formerly visiting researcher, Maranhão)
8. Wilson Milfont (Industrial Economist, Rio de Janeiro)
9. William Nagem (industrialist:oil, textiles São Luís, Maranhão)
10. Geraldo Pinto Santos (owner/manager of BRASOLEO in Bacabal, Maranhão)
11. Mrs. Raimunda (Mayor of Bacabal)
12. Luis Renner (Director of OLEAMA - the leading babassu oil producer, located in São Luís, Ma.)
13. Walmir Souto (foreman and machine designer, CIT Bacabal)