Library
Room 105-SA-18
Washington, D.C. 20523

Bioenergy Systems Report

SEPTEMBER 1982: BIOMASS FUELS FOR VEHICLES

Introduction

This report covers the production and use of alcohol fuels in developing countries, as well as experiments with the use of oils from plants and trees in diesel-powered vehicles. The Reports in this series provide information on the use of biomass for energy which may be helpful to energy planners and technical personnel in developing countries and to personnel of the U.S. Agency for International Development missions in such countries.

Funding for the preparation of these Reports is provided by the Bioenergy Systems and Technology (BST) Project of the Agency for International Development. BST activities have included field reconnaissance and pre-feasibility studies on potential bioenergy projects, several types of reports and publications, and educational workshops.

The project staff includes the AID project manager in the Office of Energy, Dr. Paul Weatherly, and a four man staff contracted from the U.S. Department of Agriculture/Forest Service. The team leader is Dr. Gus Wahlgren. All correspondence concerning BST activities should be addressed to:

S&T/Office of Energy,
Room 508, SA-18, AID,
Washington, D.C. 20523.
Telephone: (703) 235-8902.

This Report includes sections on ethanol production processes, the use of ethanol in vehicles, conventional feedstocks for ethanol production, the development of cellulose-to-ethanol processes, the uses of stillage, biomass fuels for ethanol plants, non-technical factors in planning ethanol projects, the production and use of methanol, and the use of plant oils in diesel engines.

Alcohol Fuels Overview

Alcohol was used in many automobile engines in the early decades of this century. Since the rapid increase in gasoline prices in the mid-1970's, there has been renewed interest around the world in the use of alcohol as a motor fuel.

Brazil, faced with a huge and rapidly growing oil import bill, launched the world's largest alcohol fuel program in 1975. By the end of 1981 about 300 Brazilian distilleries were producing over 4.2 billion liters (1.1 billion gallons) of fuel-grade ethanol annually. Virtually all of the gasoline sold in Brazil contains 17% ethanol. More than a half million Brazilian cars have been built or modified to operate on straight ethanol.

Commercial-scale plants for ethanol production have been built or are under construction in at least seven other developing countries; feasibility studies for ethanol plants have been made in at least six additional developing countries.

Most of the ethanol produced in Brazil and other developing countries is derived from sugarcane, either directly from cane juice or from molasses. Plants to use cassava have been built in Brazil and planned or studied in several other countries. Research programs are being conducted in the U.S., Australia, New Zealand, South Africa, Brazil, and other countries to develop economical processes to make ethanol from wood wastes, bagasse, and other cellulosic residues.

The reports in this series are compiled and written by Dean B. Mahin, International Energy Projects, P.O. Box 591, Front Royal, Virginia USA 22630, telephone (703) 636-2126, under a contract with the U.S. Department of Agriculture funded through the Bioenergy Systems and Technology Project of the U.S. Agency for International Development. Copies are distributed primarily through USAID missions in developing countries.

ETHANOL PRODUCTION PROCESSES

The production of ethanol from sugar or starch crops involves several basic steps which are described below :

Pre-fermentation Processing: The initial step is the preparation of an aqueous solution or slurry known as "mash". If sugarcane is the feedstock, the mash is made from juice pressed from the cane or from molasses remaining from sugar producton. If a starch crop such as corn or cassava is used, the starch must first be converted to sugars through cooking with enzymes; this process is called "saccharification".

Fermentation: Most ethanol is fermented in batches in batteries of cylindrical tanks similar to that shown in the adjacent sketch. Yeast is added, the yeast cells multiply, and the sugars are converted to ethanol. The fermented mash or "beer" contains 7 to 10% ethanol. In recent years several types of continuous fermenters have been developed. Advantages of continuous processes can include rapid fermentation due to a high concentration of yeast cells, elimination or costly fermentation tanks, suitability of the process for automatic controls, and increased productivity.

A semi-continuous "Melle-Boinot" process, including the recycling of cells from a huge yeast population, has been used successfully in Brazil without the major contamination problems which have plagued some continuous processes. Most of the other continuous processes have not yet been widely used in commercial operations.

Distillation: Water is removed from the ethanol by passing the beer through two or more distillation columns. In the initial beer still or stripping column a mixture of about 50% ethanol and 50% water boils off at the top of the still; the "bottoms" or stillage are drawn off at the bottom. An additional column, usually called a rectifying column, is used to remove aldehydes and higher alcohols and to concentrate the fuel to about 95% ethanol and 5% water. This product is known as hydrated or wet ethanol.

Dehydration: Since an alcohol fuel containing 5% water cannot be blended with gasoline without the "phase separation" problems described on the next page, a further "azeotropic" distillation is necessary to convert the wet alcohol to anhydrous or water-free alcohol. Benzene, cyclohexane, or gasoline are added to form an azeotropic mixture with the remaining water. The mixture has a different boiling point than the ethanol, which permits separation of the ethanol through distillation. This azeotropic distillation adds substantially to the complexity, expense, and energy consumption of the ethanol production process. Extensive research is under way on new techniques for removing water from ethanol. One method involves the use of a "molecular sieve" made of a material which has pores smaller than the ethanol molecules but larger than the water molecules. Other techniques have also been used, but are not yet commercially available.

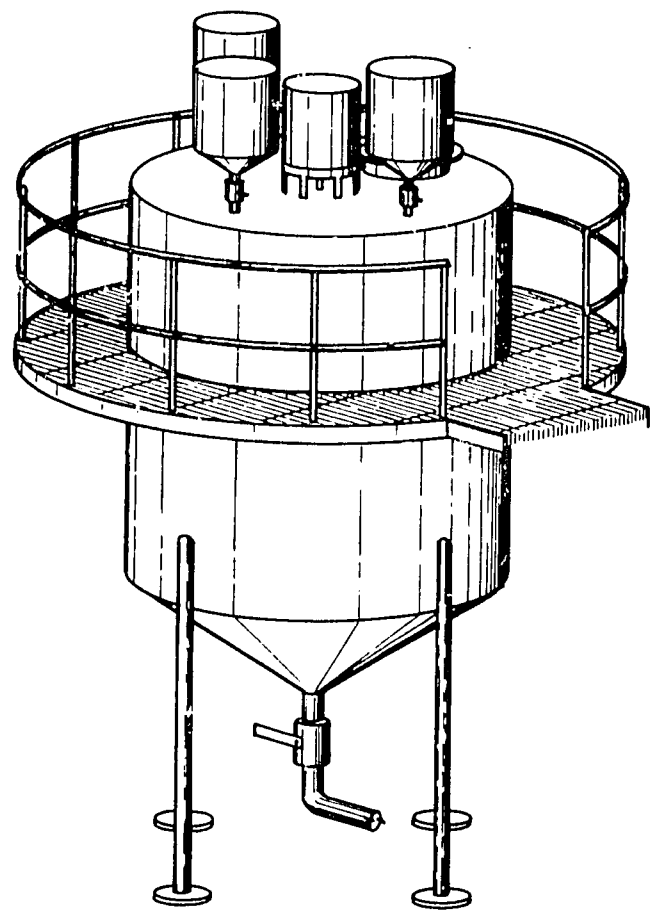

THE USE OF ETHANOL IN VEHICLES

I. Spark-ignition Engines

Gasoline/Ethanol Blends

Spark-ignition (gasoline) engines can be operated without modification on blends containing 10 to 20% ethanol and 80 to 90% gasoline. All of the gasoline sold in Brazil contains about 17% ethanol (20 liters of ethanol to 100 liters of gasoline). In the U.S. the most common blend, known as "gasohol" contains 10% ethanol. The "Alcogas" used in the Philippines contains 15% ethanol, and several other developing countries are using or planning to use blends with 15% ethanol.

In the United States, the Renewable Fuels Association estimates that sales of ethanol for blending with gasoline will reach about 150 million gallons in 1982, approximately double the 75 to 80 million gallons sold in 1981. Three large new ethanol plants will begin production soon, and the U.S. ethanol production capacity may reach 500 million gallons per year by 1983. This increased production and use of ethanol is due in part to its value as an octane enhancer to replace tetraethyl lead, the use of which is being reduced out in the U.S. pursuant to Federal environmental regulations.

Most tests in the U.S. have indicated that ethanol used in blends with gasoline must be nearly anhydrous or water-free. If there is more than .1 or .2% water in the blend, the ethanol and water will settle to the bottom of the tank, the ethanol-water mixture will be fed to the engine, and it will malfunction. This problem of "phase separation" has required the producton of anhydrous alcohol for use in blends, even though the removal of the last 5% of the water adds considerably to the expense of production. Special care is necessary to prevent contamination of the anhydrous ethanol with moisture during storage and transport.

The phase separation problem may be less serious in warm climates. In tests by the Ministry of Industry in Thailand, phase separation occurred at temperatures below 10 to 11°C with a 20% blend of ethanol containing 5% water. Phase separation difficulties arose in tests of 95% ethanol in blends with gasoline at the Oil and Gas Technology Development Center in Indonesia. Some phase separation problems have also been encountered in the Philippines when anhydrous alsohol was contaminated by water in rural areas.

Fuel consumption tests with blends of ethanol with gasoline have produced somewhat contradictory results. In the largest test program in the U.S., the Two-Million Mile Gasohol Road Test Program in Nebraska, average mileage was 5% higher with a blend containing 10% anhydrous ethanol than with gasoline. However, some other tests have shown a slight reduction in miles per gallon or kilometers per liter when using a gasoline/ethanol blend. The major variable is apparently the design and adjustment of the engine.

Straight or Unblended Ethanol

Very substantial modifications of a spark-ignition engine are necessary to permit it to operate on straight or unblended ethanol:

(a) Since ethanol requires a lower air/fuel ratio, the metering jets in the carburetor must be enlarged to 1.3 or 1.4 times the original diameter.

(b) Plastic and rubber parts, which would be slowly dissolved by the ethanol, must be replaced by metal parts. The inside of the fuel tank must be coated with an anti-corrosive paint.

(c) Depending on the engine and previous adjustments, a slight modificaton in ignition timing may be necessary.

(d) The compression ratio should be increased to about 12:1.

(e) In order to start the engine at temperatures lower than about 10°C, a starting system for injecting gasoline will

probably be needed. In one such system a dashboard button activated an electric fuel pump; it squirted gasoline from a small container through a nozzle directly into the carburetor.

(f) To maintain smooth operation in cold weather, it may be necessary to pre-heat the intake air with a heat exchanger (using heat from the exhaust gases or radiator coolant) or with an electric heating coil under the carburetor. The ethanol used in such a modified engine does not have to be anhydrous.

At present Brazil is the only country in which automobiles have been designed and built to operate on straight ethanol. An agreement between the Brazilian government and automobile manufacturers in 1979 provided for the building of more than 200,000 ethanol cars per year plus a program for modifying quite a few existing cars. Cars incorporating the modifications described above have been built by Volkswagen, Ford, General Motors, and Fiat in Brazil. Various price subsidies and other incentives have been offered by the Brazilian government to encourage the purchase and use of the ethanol cars. While the number of new and modified cars has lagged behind the 1979 targets, more than a half million cars using straight ethanol are now on the roads in Brazil.

All of the Brazilian ethanol cars get fewer kilometers per liter of fuel than comparable cars using gasoline. A Brazilian magazine indicated mileage reductions for various models ranging from 12 to 25%, although reductions of up to 30% have also been reported. One owner indicated that the driving range with the larger 55 liter tank on his ethanol car was about the same as with a 40 liter tank in the comparable gasoline-powered model. The reduced range of these cars tends to cancel out the price advangtage of ethanol, which formerly sold in Brazil for about 65% of the price of gasoline and was recently reduced to only 59% of the price of gasoline to stimulate the sales of ethanol cars and of surplus ethanol.

There have been several other problems with the ethanol cars. Carburetors require cleaning at intervals of less than 5,000 kilometers. Corrosion in the fuel system has been a serious problem in the first generation of ethanol cars, but the manufacturers believe that 95% of these problems has been eliminated through the use of new alloys and other new materials in the current models. However, there have also been reports of serious degradation of pistons and cylinders in less than 40,000 kilometers due to acids absorbed by the lubricating oil from the ethanol; the solution to this problem has not yet been found.

2. Diesel Engines

Although a diesel engine will operate on a blend of about 10% anhydrous ethanol and 90% diesel oil, various problems seem to preclude the use of such blends. Engine efficiency is reduced due to the lower energy content of the ethanol and the very low cetane rating which results in a delay in ignition and other problems. Phase separation problems are more critical when ethanol is blended with diesel fuel than with gasoline. Due to the low boiling point of ethanol, vapor lock or bubbles may block the fuel injection pump.

Another method, dual-fueling, requires two separate fuel systems. Ethanol is aspirated into the intake air, using a carburetor or a spray nozzle, to replace some of the diesel fuel. Spray injection systems work best if the intake air is heated in a heat exchanger which transfers heat from the engine coolant or exhaust gases. Tests at Michigan State University and the University of Illinois indicated that ethanol with up to 50% water content worked as well or better in "dual-fueling" experiments as much dryer ethanol, although the wetter fuel could displace less diesel fuel.

Since it seems doubtful that the use of ethanol in diesel engines will prove to be both technically and economically feasible, researchers have examined other biomass fuels for these engines. Extensive engine tests of various plant oils are described on pages 21 to 23.

ETHANOL FROM SUGAR AND STARCH CROPS

Almost all of the fuel-grade ethanol produced in the United States is made from corn or other grains. Because of the optimum climate, soils, and technology in the American Cornbelt, it is possible to use some corn for ethanol production and still meet other domestic and international demands for corn and corn products. However, the large-scale production of corn is rare in developing countries. No information has been obtained in the preparation of this Report on the current or proposed use of corn or other grains to make fuel alcohol in any developing country. Under these circumstances, this Report will focus on the production of ethanol from those feedstocks which are used or available in developing countries.

I. Sugarcane

Sugarcane demands a uniformly high temperature, intense sunlight, a well-drained and relatively fertile soil, and 80 to 90 inches (2,000 to 2,300 cm) of rain which is well distributed during the growing season or supplemented as necessary by irrigation. The growth period ranges from eight to twenty-two months or longer, depending on climate and rainfall. The plant matures with the approach of cool or dry weather. In most areas the harvesting season ends with the coming of the dry season; the sucrose content of the cane drops due to new growth and the weather inhibits the transport of the cane. The harvesting season is normally limited to a period of from 150 to 180 days.

Neither sugarcane nor the bagasse residue which is used as a fuel in sugar mills can be stored for very long. The sugar content of the cane deteriorates rapidly after the stalks are cut; the bagasse will ferment unless prohibitively expensive storage facilities and techniques are used. For these reasons the direct production of ethanol from sugarcane juice is generally limited to the cane harvesting season and the plants are idle for half of each year. This inability to maintain production through out the year increases the capital costs of ethanol per liter.

Most of the ethanol produced in Brazil and other developing countries is made from sugarcane or from cane molasses. In its early years Brazil's alcohol fuel program mainly utilized sugarcane which was diverted from sugar productrion. Nearly half of the expanded alcohol fuel production capacity authorized in 1978 was to be located at sugar mills. Such plants normally utilize the existing facilities at the sugar mill for the handling of cane and bagasse and for the generation of steam and perhaps electric power with bagasse. Brazilian sources indicate that, due to these savings in capital costs, the average cost of an ethanol plant at a sugar mill is about 20% less than that of an independent sugarcane-based plant.

However, the scale of operations of many sugar mills is too small to permit the maximum economies of scale in the use of ethanol production facilities. The equipment at many of the sugar mills for cane handling and steam and power generation is inefficient and obsolete. The principal advantage of the independent ethanol plant is that its scale, technology, and equipment can be determined exclusively in terms of optimizing alcohol fuel production.

A World Bank publication indicated in 1980 that, if necessary feedstocks, fuel, transport, local technology, and markets were available, production economies could be achieved by building large plants with capacities up to about 360,000 liters/day. However, considering all the factors, the Bank concluded that the optimum size for plants based on sugarcane or molasses would be between 120,000 and 240,000 liters/day; smaller-scale plants might be economically viable in areas where isolation and high transport costs result in unusually high prices for petroleum products. Most of the Brazilian plants and the majority of the ethanol plants built in other developing countries have been designed to produce 120,000 liters/ day. If it operates during

a 180 day cane harvesting season, such a plant will produce about 21.6 million liters of ethanol per year.

In Brazil, where average yields are 60 tons of cane per hectare per year and 65 liters of ethanol per ton of cane, about 6,000 hectares of cane is needed to supply a plant with a capacity of 120,000 liters/day. While some cane has been supplied by small and medium farmers, most of the cane required by these plants is grown on large plantations.

The capital costs of a 120,000 liters/day sugarcane-based ethanol plant were about $7.6 million in Brazil in 1979. The World Bank estimated in 1980 that such a plant would cost about $9.5 million in medium-cost developing countries and up to $11.4 million in high-cost countries where most equipment, professional services, and skilled labor for the construction of the plant would have to be imported. Capital costs for molasses-based plants may be 20% lower, while the costs of cassava-based plants will probably be about 20% higher.

Sugarcane which was previously used for sugar production can be diverted to ethanol producton. However, it does not appear feasible to divert cane to fuel production only temporarily when sugar prices are low. A sugarcane-based ethanol plant can be economically viable only if it has an assured supply of cane and operates at full capacity each year during the cane-harvesting season.

Plants making ethanol directly from sugarcane are in operation or under construction in Brazil, Paraguay, Colombia, Costa Rica, Honduras, and Zimbabwe. Feasibility studies for sugarcane-based ethanol plants have been conducted in Ethiopia, Nicaragua, Papua New Guinea, Thailand, Sri Lanka, and the Philippines.

Despite the economies of scale of larger-scale ethanol production, several institutions in developing countries have conducted experiments with smaller-scale plants involving much reduced capital costs. The National Maize and Sorghum Research Center in the Brazilian state of Minas Gerais built a 1200 liters/day plant and has studied improved extraction, distillation, and energy efficiency techniques for "micro" distilleries producing from 1,000 to 5,000 liters per day. These studies indicated that the production costs per liter at such small distilleries were about one-third higher than at larger plants at sugar mills. A 1,500 to 3,000 liters/day micro-distillery is planned at a sugar mill in the Brazilian state of Parana; it will use Tilby separaters to process the cane and is reported to cost about $316,000.

The PNOC Alcohol Corporation in the Philippines plans to build a pilot micro-distillery producing 4,000 liters of ethanol per day from sugarcane. Researchers at the University of Costa Rica have built a small-scale plant; they have proposed an agroindustrial system using mini-stills processing 10 to 15 tons per day of sugarcane and producing 500 to 1,000 liters of 96% ethanol per day. They estimate that these small stills could be built for only $25,000.

The Ceylon Insitute of Scientific and Industrial Research (CISR) in Colombo, Sri Lanka, has studied the possibility of a network of microdistilleries in areas of Sri Lanka suitable for sugarcane but remote from the two existing sugar mills. CISR built a 850 liter per day experimental plant and plans a similar scale prototype plant in a sugarcane-growing area.

The Central American Institute for Industrial and Technical Research (ICAITI) in Guatamala has developed an "Ex-Ferm" process in which cane chips are fermented before the juice is removed; the process is currently being evaluated at Battelle Columbus Laboratories.

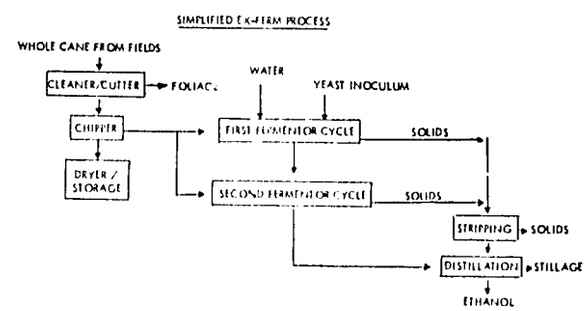

2. Molasses

Cane molasses, also known as blackstrap molasses, has been used to make beverage alcohol in many countries and is now also used for fuel alcohol production. In the production of cane sugar the molasses is separated from the sugar crystals in a centrifuge. About 190 liters of the heavy residue is produced with each ton of sugar. In 1978-79 sugar mills around the world produced about 33.5 million tons of molasses. Much of it is used as a supplement to the feed for cattle. However, in many developing countries the market for molasses as a livestock feed is limited. In some areas, notably in the Caribbean, molasses is usually made into rum or other beverages. In a few countries, especially in India, molasses has been extensively used as a fertilizer. However, the World Bank estimated in 1980 that about 5 million tons per year or about 15% of the total world production of molasses was disposed of as a valueless waste.

Molasses from sugarcane contains 50 to 55% sugar; about 280 liters of ethanol can be produced from each ton of molasses. It can be stored for substantial periods without a substantial drop in sugar content; however, the year-round operation of molasses-based ethanol plants near sugar mills requires a supplementary fuel, since bagasse is available only during cane-harvesting.

Nearly half of the new ethanol production capacity authorized by the Brazilian government in 1978 was to be located at sugar mills, and many of these new plants have used molasses. All of the ethanol currently used in the "Alcogas" program in the Philippines is made from molasses. A large molasses-based ethanol plant has been under construction in Kenya. Studies of the feasibility of ethanol production from molasses have been carried out in India, Thailand, Sudan, Jamaica, Mali, and Bangladesh.

Research on improved processes for the production of ethanol from molasses has been conducted at the University of Hawaii, the University of the Philippines at Los Banos, Massey University in New Zealand, the Indian Institute of Technology, and the Taiwan Sugar Research Institute.

A comprehensive review of commercial processes for the manufacture of anhydrous ethanol from molasses was conducted for the U.S. Department of Energy in 1979-80 by the University of Hawaii and the Hawaii Sugar Planters Association. Major elements of the conceptual design for a molasses-based ethanol plant which resulted from the Hawaii study are outlined below.

The plant would be adjacent to a sugar mill to avoid costs of transporting molasses and to permit the use of the mill's existing equipment to produce steam and electric

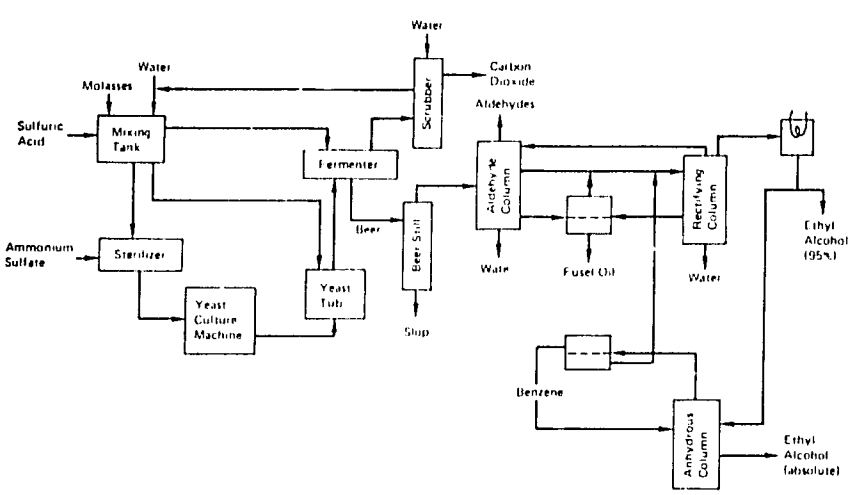

Flow Diagram for Molasses-based Ethanol Plant

power from bagasse during the cane-harvesting season. The molasses would be diluted to below 20% sugar to facilitate fermentation, partly by recycling some of the stillage remaining after ethanol was distilled from the mash. The molasses would be sterilized to limit unwanted microorganisms which may compete with the yeast for sugars, reduce ethanol yield, and possibly produce toxic substances which inhibit the action of the yeast. Salt concentrations would be reduced by centrifuging to limit scaling and permit the recycling of larger quantities of stillage for molasses dilution in the fermenter.

A continuous fermentation process would be used to reduce the needed fermentor volume to as little as 15% of the volume needed for traditional batch fermentation as well as to provide improved stability and control of the fermentation process, slightly better ethanol yields, and reduced labor, energy, and cleaning costs. A portion of the yeast would be recycled. After the process steam was initially used in the stripping column, lower pressure steam would be used in other columns to make the most efficient total use of the heat in the steam. Steam consumption in the evaporation of stillage would be reduced by "quadruple-effect" evaporation involving the reuse of the latent heat for successive evaporations. The plant would operate 330 days a year, using fuel oil during the non-harvesting season when bagasse was not available.

The Hawaii study concluded that such a plant, designed to produce 84,500 liters per day or 27.9 million liters per year, would cost aobut $9.7 million in Hawaii, not including stillage treatment equipment. The World Bank estimated that, although a 120,000 liters/day seasonal molasses-based plant could be built for $6.1 million in Brazil in 1980, the same plant would cost up to $11.4 million in the highest cost developing countries.

Capital costs of molasses-based ethanol plants at sugar mills are somewhat lower than those of independent plants built to produce ethanol directly from sugarcane. The principal savings are due to (a) the elimination of the cane crushing and separation processes and (b) the use of existing steam and power generating facilities including the bagasse fuel resulting from the production of sugar from cane. Brazilian data indicates that, if a molasses-based plant operated only during the sugar production season and does not require a supplementary fuel system, capital costs should be 20% less than those for an independent sugarcane-based plant.

The economic feasibility of the production of ethanol from molasses depends primarily on the alternative uses of molasses and thus its price. In Hawaii, where molasses is in demand as a feed supplement for cattle, the estimated molasses cost of $72 per ton was 55% of the net annual operating cost of the proposed plant described above. However, molasses has a much lower value in many developing countries.

The World Bank stated in 1980 that ethanol production from molasses may be economically viable in rather remote areas where surplus molasses is available from sugar mills. For example, Sudan's recently completed Kenana sugar refinery produces enough molasses to make about 25 million liters of ethanol per year; since the facility is in a remote area with a limited market for molasses, most of it is discharged into the sand.

3. Sugar Beets

Only a few developing countries have a suitable climate for sugar beets; they grow well in temperate areas with temperatures between 16 and 28°C and with more than 50 cm of rain per year or equivalent irrigation. The beets produce the most sugar when night temperatures at harvest time are from 10 to 15°C. Most sugar beets are grown in moderately high latitudes.

Several commercial plants produce ethanol from sugar beets in Europe. Technical and economic studies on the production of ethanol from sugar beets have been conducted at the U.S. Department of

Agriculture's Crops Research Laboratory at Utah State University in Logan, Utah, and at several institutions in Australia and New Zealand. The Commonwealth Scientific and Industrial Research Organization (CSIRO) in Melbourne has developed a "solid phase fermentation" process in which pulped beets are fermented prior to the removal of fibers; the process has been used with equal success with sweet sorghum. Lincoln College in Canterbury, New Zealand, has built a pilot plant for the production of ethanol from sugar beets.

The Middle East Technical University in Ankara, Turkey, concluded that a small percentage of the land now devoted to sugar beet cultivation in Turkey could yield enough feedstock for ethanol production to meet a significant proportion of that country's fuel needs. However, no other studies of the use of sugar beets for ethanol production in developing countries have been noted.

4. Sweet Sorghum

During the past several years a number of studies have indicated that sweet sorghum (varieties of sorghum bicolor) would have major advantages as an ethanol feedstock:

(a) It can be grown in a wide range of climatic and soil conditions at temperatures from 18 to 40C. It should be possible to grow it anywhere that sugarcane, sugar beets, cotton, corn, or grain sorghum is grown. Best production is on loams and sandy soils with adequate moisture and good drainage.

(b) Sweet sorghum is a relatively quick (90 to 150 day) crop. Two or even three crops per year can be grown in warm-climatic areas. Harman Engineering of Huntsville, Alabama, has proposed a nearly year-round ethanol production system in the southeastern U.S. based on three crops per year of sweet sorghum; freshly-cut sorghum would be processed from 250 to 300 days a year. Since the rapid drop in sugar content precludes storing the sorghum, molasses made from it would be fermented during the rest of the year.

(c) Sorghum can be used to extend the ethanol production season at sugarcane-based plants. It could be grown in the cane fields between sugarcane crops or on other land to provide feedstocks for the plant during at least a part of the six-month period in which the plant is closed due to the lack of cane.

(d) The potential yield per hectare from sweet sorghum is higher than that for any other crop, although further research on cultivation techniques and perhaps the development of hybrid varieties may be necessary to realize the full potential. A World Bank publication has indicated that the ethanol yield from two crops a year of sweet sorghum could be as high as 4,000 liters/year or slightly above the typical yield from sugarcane in Brazil. However, several studies have indicated a potential for much higher yields.

(e) The production of ethanol from sweet soghum leaves a residue which is similar to sugarcane bagasse; it has a high heating value (7500 Btu/pound) and, like bagasse, can be used as a boiler fuel in the ethanol plant.

Battelle Columbus Laboratories in Columbus, Ohio, coordinated extensive experiments with the production of sweet sorghum in the U.S. in the late 1970's for the U.S. Department of Energy.

Very successful tests with sweet sorghum have been conducted in small-scale plants at the Tennessee Valley Authority's research center at Muscle Shoals, Alabama, and at the University of Nebraska. The Nebraska agricultural engineers are also developing a harvesting machine for sweet sorghum.

Hawkesbury Agricultural College in Richmond, Australia, has an Australian government grant to study the planting, harvesting, processing, and fermentation of sweet sorghum.

5. Cassava or Manioc

Cassava, also known as manioc, is a starchy root crop which is widely grown as a staple food in Latin America, Africa, and Asia. It has several advantages as an ethanol feedstock:

(a) It can be grown on marginal land with limited rainfall and/or poor soils; it will thrive on soils which are too poor for sugarcane. While current ethanol yields per hectare are somewhat below those from sugarcane, it has a potential with improved cultivation techniques for an ethanol yield equal to or higher than sugarcane.

(b) If planting is properly timed, the roots can be harvested throughout most of the year; they can also be stored for considerable periods after harvesting. Cassava-based ethanol plants can thus remain in operation for 300 to 330 days per year, with a significant reduction in the capital cost per liter of ethanol. Cassava is also suitable for seasonal use along with another feedstock, i.e., sweet potatoes.

(c) Cassava does not require a plantation-type system and has traditionally been grown by small farmers. They can supplement their income by using a part of their land to grow cassava for ethanol.

There are two main disadvantages to the use of cassava, compared to sugarcane:

(a) The starches in the cassava must be converted to sugars prior to fermentation. Due to the additional equipment needed for the saccharification of the starches, a cassava-based plant costs about 20% more in Brazil than a plant built to use sugarcane. However, this additional capital cost should be offset by the spreading of capital costs over a much longer production season.

(b) The processing of cassava roots does not result in a residue which can be used as a boiler fuel as bagasse is used in plants based on sugarcane or molasses. Cassava leaves and stalks are normally separated from the roots in the fields, and the collection of these residues has been considered to be prohibitively expensive. However, two organizations in Asia are now planning to use cassava stalks along with wood as fuel for possible future ethanol plants. (See p. 15)

At least five cassava-based plants have been built in Brazil. Petrobras, the Brazilian petroleum organization, and the National Institute of Technology are operating a plant designed to convert 360 tons of cassava per day into 60,000 liters of ethanol. The present and planned cassava-based plants in Brazil include others of this size as well as plants comparable to the typical sugarcane-based plant (120,000 liters per day). A diagram of the basic process used in these plants is shown on the opposite page. One plant operates well below capacity due to the use of a cassava variety which grows better in another Brazilian region.

Two smaller plants which will use cassava are being built in Indonesia. With assistance from a German firm, the Indonesian Agency for Development and Application of Technology (BPPT) is building a 15,000 liters/day plant in the Tulang Balang area of Sumatra. A pilot plant with a 8,000 liters/day capacity is also being built in Sumatra with Japanese technology under a grant from the Japanese government which also includes a small laboratory for research on cassava-to-ethanol processes. Both these plants will use sweet potatoes when they are available and will use cassava during the remainder of the year. The cassava will be grown by small farmers who continue to produce food on most of their land. Initially, both plants will use oil-fired boilers, but biomass fuels may be used later.

Davy McKee Pacific Ltd. of Melbourne, Australia, has designed a plant for the government of Papua New Guinea which would produce about 6,000 liters per day or 2 million liters per year from cassava. This Baiyer River project is currently on "hold", pending an economic reappraisal by the government of Papua New Guinea. Davy McKee Pacific also made a feasibility study for a plant on the south coast of PNG would use

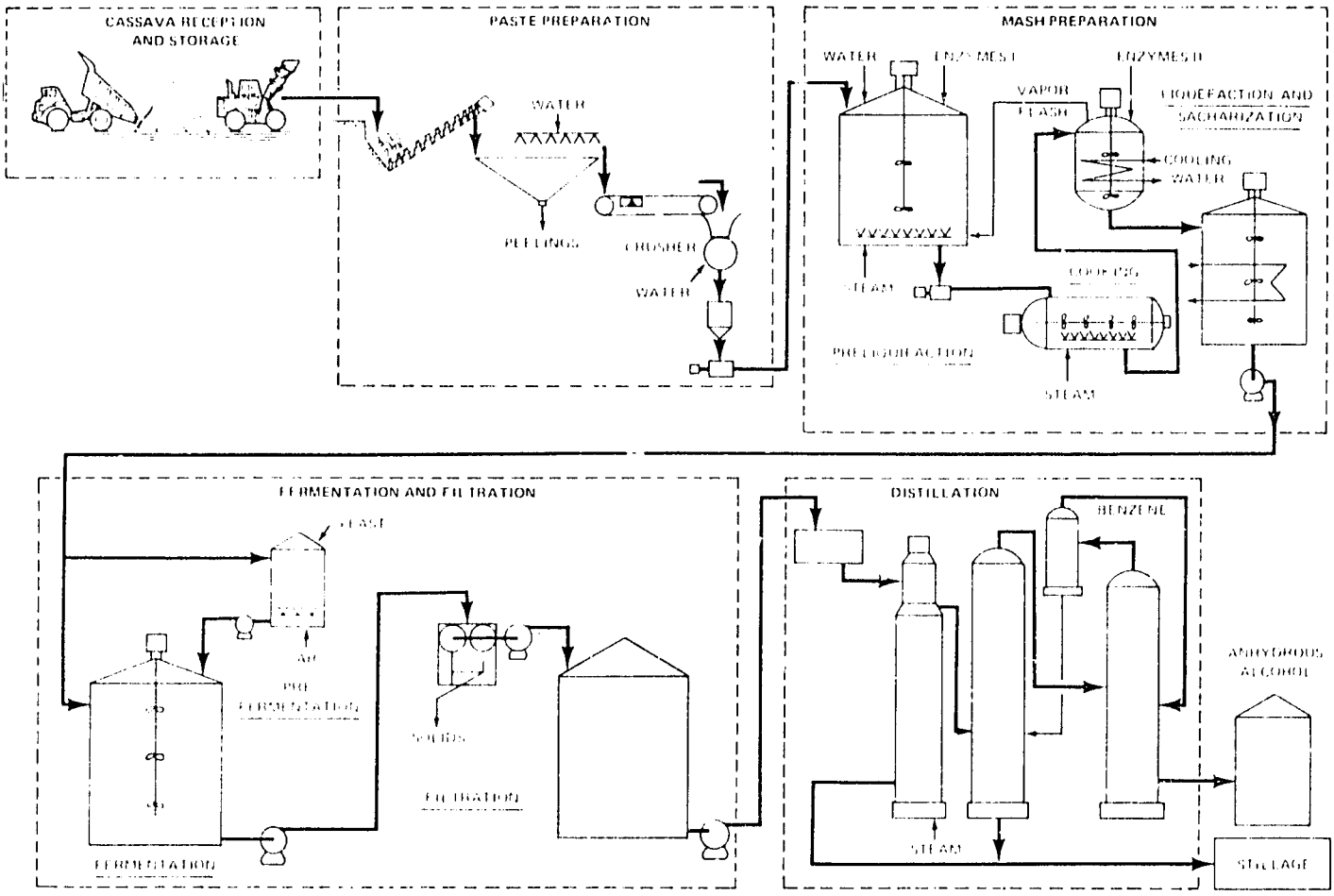

SOURCE: PETROBRAS BRAZIL

Flow Diagram for A Cassava-Based Ethanol Plant

cassava or sugarcane to make ethanol for the region around the capital, Port Moresby.

An agency of the South African government is studying the possibility of building ethanol plants in connection with a large-scale cassava development project in the Makatini Flats of northern Zululand.

Both the Association of the Fermentation Industry in Japan and Davy McKee Pacific have made studies of the feasibility of ethanol production from cassava in Thailand. The Thailand Institute of Scientific and Technological Research in Bangkok has experimented with cassava in a 1500 liters/day pilot plant.

Studies of the conversion of cassava to ethanol have been included in a comprehensive program on all aspects of the production and use of cassava which has been carried out for the government of Australia by CSR Ltd. of Sydney. The Unversity of Sydney has experimented with cassava in a continuous tower fermentation process.

Bioenergy Developments Ltd. of Christchurch, New Zealand, developed a plan for an ethanol plant using cassava; implementation of the plan is being considered in the Republic of Vanuatu, formerly the New Hebrides.

Equipment for the post-harvest processing of cassava in an ethanol plant, including a cassava chip dryer, has been built at the University of the Philippines in Los Banos.

6. Other Feedstocks

In countries with relatively large-scale production of fruits or vegetables, sub-standard fruits or vegetables or "culls" are potential ethanol feedstocks, as are some cannery residues. The California Energy Commission has supported the construction of a plant near Fresno designed to produce eight million gallons (30 million liters) of ethanol from cull fruits from several nearby fruit-packing plants. The University of Florida and the South Dakota State University have experimented with the use of cull potatoes for ethanol. Osaka University and the Mitsui engineering company in Japan have developed a rapid fermentation process using sweet potatoes. A study by Lawrence Berkeley Laboratories suggested that mill juice from pineapple canneries in Hawaii could be used as an ethanol feedstock.

Several products from trees have been used. Several agencies in the Philippines are studying the technical and economic feasibility of producing etanol from coconut sap. The National Development Company in the Philippines is operating a small distillery with the sap of the nipa palm, which grows in swamps and along tidal streams. Large-scale use of the nipa sap may be precluded by harvesting and transport difficulties in its wetlands habitat. The mesocarp of the nut of the babassu tree, which is abundant in northern Brazil, contains 69% starch; it has been used for ethanol production in a small plant in Brazil.

Research on the possible use of cattails (Typha sp.) for ethanol has been carried out at the Universities of Minnesota and Florida. The prospects of making ethanol from taro and other starch plants grown in Western Samoa was studied by Davy McKee Pacific. A Minneapolis firm, I.E. Associates, is examining ethanol potentials from arrowroot grown in St. Vincent in the Caribbean. U.S. and French studies indicate that up to 4700 liters of ethanol could be produced from each hectare of Jerusalem artichokes; they grow best in temperate climates.

ETHANOL FROM CELLULOSE

In recent years much research activity in the U.S. and other countries has been directed toward the goal of developing an economically and technically viable process for the production of ethanol from wood and other cellulosic materials. Although several processes may be approaching commercialization, no commercial-scale wood-to-ethanol plant exists at present except several old plants in the USSR.

Wood and other lignocellulosic materials are composed of hemicellulose, cellulose, and lignin. In order to convert these feedstocks into ethanol it is necessary to separate these three components and to convert the hemicellulose and cellulose into fermentable sugars. This process, known as hydrolysis, is inhibited by the crystalline structure of the cellulose and by the lignin seal which surrounds the cellulose fibers. There are two types of hydrolysis processes. In acid hydrolysis, mineral acids are used at rather high temperatures and pressures to break down the cellulose molecules. In enzymatic hydrolysis, the cellulose is decomposed by the action of enzymes.

Extensive research on both acid and enzymatic hydrolysis processes has been carried out in the U.S. during the past five years. This hydrolysis research is the most extensive part of the alcohol fuels research program funded by the U.S. Department of Energy and coordinated by the Solar Energy Research Institute of Golden, Colorado. At present the total program includes research teams at 23 universities and firms.

Acid Hydrolysis Processes

Processes to convert wood to sugars with concentrated hydrochloric or sulfuric acid were developed during World War II; however, the need to use non-metalic construction or expensive metal alloys increased the cost and limited the use of these processes.

A dilute acid process developed in Germany, the Scholler process, was more

widely used. During the initial phase of this process the hemicellulose fraction of the feedstock was hydrolyzed with dilute sulfuric acid at moderate temperatures and pressures; the resulting sugars were then removed. Subsequently high pressure steam and dilute acid converted the cellulose fraction to sugars. As in all hydrolysis processes, the lignin remained virtually unchanged.

The Scholler process was modified and improved in the early 1940's by the U.S. Forest Service's Forest Products Laboratory in Madison, Wisconsin. A plant using the Scholler/Madison process was completed just after Wold War II in Springfield, Oregon. Test runs indicated corrosion, scaling, and other problems, and the development of the process was not continued in the U.S. However, plants using the Scholler/Madison process were built in the Soviet Union, Switzerland, and Japan; about 14 such plants are reported to be still in operation in the Soviet union.

The U.S. Department of Energy has funded research on acid hydrolysis at Purdue University, the Georgia Institute of Technology, New York University, Dartmouth College, and Texas Tech.

A research team at Purdue University in Lafayette, Indiana, has produced nearly the maximum theoretical yield of glucose from cellulose using solvents to destroy the crystallinity of the cellulose. The principal limitation on the commercial use of this process is the lack of a technique for the low-cost recovery and reuse of the solvents.

Researchers at the Georgia Institute of Technology in Atlanta have developed a cellulose-to-ethanol process using a combination of proven technologies. Wood chips are pretreated by a "steam explosion" process developed by the Iotech Corporation of Ottawa, Canada. High pressure steam permeates the feedstock; sudden release of the pressure forces the material through a die and distintegrates its structure. The feedstock is then converted to glucose by dilute acid hydrolysis; ethanol is produced by conventional fermentation and distillation.

The Nuclear Assurance Corporation of Atlanta and subcontractors conducted a feasibility study for a commerical plant using the Georgia Tech process. The study concluded that the minimum profitable plant would produce at least 16 to 18 million gallons per year and that a plant producing 25 million gallons (94 million liters) would be an attractive investment opportunity. Capital costs for the larger plant would range from $100 to $125 million, depending on the extent of the equipment for by-product recovery.

The New Zealand Forest Service in Rotorua has developed an "acid percolation hydrolysis" process and tested it since 1979 in a pilot plant with a 250 liter reactor. Sugar is produced by the percolation of 0.5% sulfuric acid at 190°C through a bed of sawdust or wood chips. The final product, after fermentation and distillaton, is 270 liters (60 gallons) of anhydrous ethanol per ton of wood. Ultra Systems, Inc., of San Francisco is participating in the planning of a 50 ton/day plant which may be built in the U.S. to demonstrate the New Zealand acid percolation process; the plant would be located at Norman, Arkansas, and would use residues from two lumber mills.

Canertech, Inc., an energy technology corporation established by the Federal Government of Canada, plans to use an acid hydrolysis process in a pilot plant to convert aspen wood to ethanol. The one ton/day plant, to be built late in 1983, will provide experience for a scaled-up demonstration plant to be built in 1986-87. A decision has not yet been made as to the type of acid hydrolysis process which will be used.

The Tennessee Valley Authority, A U.S. Government regional power and development agency, is given high priority in its Biomass Fuels Program to the development of an improved acid hydrolysis process to convert wood to ethanol. Current bench-scale research at Muscle Shoals, Alabama, may lead to a decision to build a pilot plant to stimulate private investment in wood-to-ethanol plants in the heavily forested region.

Several Brazilian research institutions have conducted research and development projects involving the conversion of wood to ethanol with dilute sulfuric acid processes. COALBRA, a joint enterprise of the Brazilian Government and private companies, began planning in 1980 for a 100,000 liters/day plant converting eucalyptus wood with acid hydrolysis. In 1981 the Brazilian Government signed an agreement with the Soviet Union for the design and construction of a demonstration acid hydrolysis plant with a capacity of 30,000 liters/day.

Enzymatic Hydrolysis Processes

Another group of institutions has been working on the conversion of cellulose to fermentable sugars with enzymes known as cellulases. Teams at Rutgers University and at the U.S. Army's Natick Laboratories have developed superior strains of cellulases from Trichoderma molds which destroyed cotton materials in army equipment in the South Pacific during World War II.

A cellulose-to-ethanol process using enzymatic hydrolysis has been developed by a team which worked initially for Gulf Oil Company and is now at the University of Arkansas at Fayetteville. The process begins with a mechanical pretreatment of the feedstock to separate the lignin from the cellulose. The conversion of pretreated cellulose slurry to glucose and the conversion of the glucose to ethanol occur in a single vessel. Enzyme activity is inhibited by concentrations of glucose; by converting the glucose to ethanol as rapidly as it is formed, the enzymes are able to function more efficiently. Ethanol yields are reported to be 25% to 40% higher than in a two-stage process.

Economic studies of the Gulf/Arkansas process indicated that the optimum-scale plant would process 2,000 tons per day of feedstock (1500 tons of municipal solid waste and 500 tons of pulp mill wastes) and produce about 50 million gallons (189 million liters) of ethanol per year. The ethanol plant would cost about $153 million while the related resource recovery facility would cost an additional $107 million.

Another enzymatic hydrolysis process developed by the Iotech Corporation of Ottawa, Canada, begins with the separation of cellulose and lignin by a steam explosion process. Subsequently the cellulose is converted to sugars by enzymatic action. Lignin is recovered for use as a wood binder or other purposes. The Motor Energy Co. of St. Louis, Missouri, is developing plans for the construction of one of the four modules of a commercial-scale plant using the Iotech process.

Research on the enzymatic hydrolysis of cellulosic residues has been conducted by several Australian institutions including the University of New South Wales, the New South Wales Department of Agriculture, the University of Queensland, and the James Cook University of Northern Queensland.

In South Africa, experiments with the converison of sugarcane bagasse to ethanol via enzymatic hydrolysis have been conducted by the South African Council for Scientific and Industrial Research in Pretoria, the University of Cape Town, the Sugar Milling Research Institute in Durban, and the University of Natal at Pietermaritzburg. Other institutions studying the conversion of bagasse to ethanol include the Indian Institute of Technology in New Delhi, and the Korea Advanced Institute of Science in Seoul.

Studies of the conversion of other cellulosic wastes by enzymatic hydrolysis have been conducted by the U.S. Department of Agriculture's research center at Peoria, Illinois (wheat straw), Iowa State University (corn cobs), the University of Lowell in Massachusetts (waste paper), the University of Naples (cotton textile wastes), and an Italian Government group (wastes from the production of wine and olive oil).

Summary

At present the economic feasibility of cellulose conversion is limited by the high costs of (a) cellulose pretreatment and (b) the acids or enzymes used to convert the cellulose to sugars.

THE USES OF STILLAGE

A number of by-products or co-products are produced along with ethanol. These include bagasse and other fibrous residues, stillage, carbon dioxide, higher alcohols, and other chemicals. Economic analyses and feasibility studies for various types of ethanol plants have stressed the crucial role that utilization of these by-products can play in determining the economic viability of a particular project. Income from the sale of by-products reduces net operating costs and may make the difference between profitability and loss.

The largest-volume by-product of ethanol production is stillage, the liquid residue which is drawn off at the bottom of the stripping column or beer still. From 10 to 13 liters of stillage are produced for each liter of ethanol. It is a viscous, reddish brown liquid with an unpleasant smell. The composition of the stillage depends on the feedstock, but all stillage contains rather high percentages of organic matter and minerals. Since it has a high Biological Oxygen Demand (BOD) and Chemical Oxygen Demand (COD), untreated stillage has a high pollution effect as the sewage from a population of over one million people. However, the stillage does not contain pathogenic bacteria, viruses, and some other pollutants found in sewage.

In the early days of the Brazilian ethanol program, most of the distilleries dumped untreated stillage into rivers. As the extent of the water pollution problem became evident, dumping was outlawed by the government; however, there are reports that the ban on river dumping has not been completely enforced. Much of the stillage is treated by microbial action in lagoons before ultimate release into streams. Other options are the use of stillage as fertilizer, as animal feed, and as the feedstock for the production of biogas fuel for the ethanol plant.

Stillage as Fertilizer

In Brazil untreated stillage is widely used as fertilizer. At several distilleries the stillage is pumped to the top of neighboring hills and gravity fed to the surrounding fields. Overhead sprinkler irrigation and infiltration furrows have also been used. Some stillage is trucked to more distant fields where it is sprayed on the ground. Since the volume of nutrients is rather small compared to the large volume of water, it is not economically feasible to transport the stillage beyond a radius of about three kilometers from the plant.

One enthusiastic report from Brazil indicated that the use of stillage improved the physical and chemical properties of the soil including the pH level, water-retaining characteristics, mineral salt retention capacity, soil fertility, and microflora population. Stillage from molasses, which is itself used as fertilizer, is especially valuable as fertilizer. The high organic content of the molasses stillage (over 6%) adds needed humus to the soil. All of the sugar crops are heavy consumers of potassium; molasses stillage contains at least .4 to .7% potassium. Increases of 13 to 30% in sugarcane yields have been reported on land fertilized with stillage. Best results were otained when the stillage was applied one to four weeks before cane planting. The use of stillage reduces, but apparently does not entirely eliminate, the need for chemical fertilizer.

Excessive application of stillage can cause soil acidity problems; less stillage should be applied when the soil pH is high. Problems of excessive salinity have also been reported. There have been some complaints of unpleasant odors from the fields and of stream pollution from the run-off from fields fertilized with stillage. In one case excess use of stillage led to a very large population of blood-sucking flies.

Stillage as Supplementary Animal Feed

In the United States, residues from the production of ethanol from corn are generally used as feed supplements for livestock, especially cattle. The solid portion of the corn remaining after fermentation, usually called distillers grains, is separated from the thin liquid stillage with screens, presses, or centrifuges

The remaining thin stillage, which initially contains only about 5 to 10% solids, is usually evaporated to about 50% solids. Both these distillers dried solubles (DDS) and the distillers dried grains (DDG) have crude protein contents of about 28 to 29%. These two products are sold, separately or mixed together, through the normal feed distribution channels.

In the typical distillery in the U.S. the evaporation of thin stillage consumes up to 40% of the total energy used in the plant. To reduce this energy cost, several beverage distillers are selling whole stillage directly to farmers for use as livestock feed supplements. Use of the high protein stillage permits the substitution of low-value cellulosic materials for the hay normally fed to cattle. The stillage is pumped to feeding troughs adjacent to the distillery or delivered to the cattle feedlots in farm trucks with metal tanks. Transportation costs limit the hauling distance. The handling of the acidic stillage requires wood or stainless steel storage tanks, heavy duty pumps, and special piping. In the warm weather the stillage must be delivered promptly to the cattle, since it will turn sour and be rejected by the animals in about 24 hours.

Rather extensive research on the feeding to livestock of both dried stillage and whole stillage from corn-based ethanol plants has been carried out at several research centers of the U.S. Department of Agriculture and the livestock departments of several state universities. The results of this research was recently published by Cornell University (See p. 24).

Experience with the use of stillage from sugarcane, molasses, and other feedstocks for livestock feeding is much more limited due to several factors. The crude protein content of stillage derived from molasses is less than half that of stillage from corn. In developing countries livestock are generally allowed to graze; there are relatively few cattle feedlots and a limited market for mixed livestock feed. The cost of evaporating the stillage has seemed prohibitively high. Transportation problems increase the cost and/or limit the feasibility of transporting dried or whole stillage for substantial distances. Due to these limitations, no large-scale use of stillage as an animal feed supplement in any developing country has been reported.

Nonetheless, there are indications that stillage from molasses could be fed to animals in such countries in the future. Stillage from sugar beet molasses is evaporated to 70% solids at two ethanol plants in the Netherlands and sold for cattle feeding. A dry powder made by evaporating molasses stillage is commercially available as a feed supplement in South Africa. The University of Hawaii study of ethanol production from molasses concluded that producing an animal feed from stillage was the preferred option for the use or disposal of stillage, provided that the value of the stillage for animal feeding was confirmed by animal feeding trials. Some research on the feeding of stillage from molasses has been conducted by Brazilian institutions. A Brazilian agency has concluded that stillage from cassava has a protein content about 25% higher than that of the formula commonly used for livestock in Brazil.

Feasibility studies for possible plants using the Georgia Tech, Gulf/Arkansas, and Iotech cellulose-to-ethanol processes have included estimates of substantial income from the expected sale of stillage for animal feeding.

Stillage as a Fuel Source

The use of stillage to produce biogas fuel for ethanol plants through anaerobic digestion is described in the following section (p. 18).

Illustrations: P. 2. "Fuel From Farms," Solar Energy Research Institute. P. 6: Proceedings of the Bio-Energy Congress. P. 7: "Food, Fuel, and Fertilizer From Organic Wastes", National Academy of Sciences. P. 11: "Alcohol Production From Biomass in the Developing Countries," World Bank.

BIOMASS FUELS FOR ETHANOL PLANTS

The production of ethanol requires large quantities of energy in the form of steam for the operation of distillation columns. Ethanol plants converting cassava or other starch crops require additional steam for the initial conversion of starches to sugars. Electrical power is needed in all ethanol plants to operate pumps, mixers, and other machinery and for lighting.

If fuel oil is used to provide the required steam and power, an ethanol plant may have an unfavorable "energy balance"; more oil is used to produce the ethanol than is replaced by its use as an alcohol fuel. In recent years substantial efforts have been made to improve the energy balance in ethanol production through the use of more energy-efficient production processes. However, the best way to avoid an unfavorable energy balance is to use a renewable form of energy, especially a biomass fuel.

Direct Combustion of Biomass

Virtually all ethanol plants using sugarcane or molasses as a feedstock burn bagasse (the remainder of the cane stalk after the juice is removed) as a boiler fuel for steam and power generation. The majority of these plants have been built at sugar mills and utilize existing boilers and generators at the mills. This "piggy-backing" on existing facilities saves capital costs but often limits the full use of the available bagasse for energy production. Many of the boilers in sugar mills are hand-stoked, "Dutch Oven" units with a very low efficiency. Few mills are equipped to produce high-pressure steam. If modern systems for the combustion of bagasse and the generation of power are utilized, an ethanol plant may be able to meet all of its own requirements for steam and power and also contribute substantial quantities of electrical power to nearby communities or to the national power grid.

In the sugar production process, only the sugarcane stalk is normally transported to the mill; the tops and leaves, which represent 25 to 40% of the total sugarcane biomass, are left in the fields to rot or are burned there. Some experts have suggested that steam and power generation in sugar mills could be greatly expanded if the entire sugarcane plant was harvested and the tops and leaves were burned as fuel along with the bagasse.

All of the recent studies on the use of sweet sorghum for ethanol production have assumed that the sorghum bagasse would be used as a fuel as is sugarcane bagasse. The California Energy Commission has supported a study of the use of cotton gin trash, fruit pits, grain and rice stubble, and corn stalks as fuels for ethanol plants.

The possibility of using cassava stalks as a fuel for cassava-based ethanol plants has been studied in several countries. If the government of Papua New Guinea authorizes the construction of the cassava-based plant designed by Davy McKee Pacific, it will be fueled with cassava stalks supplemented by wood from nearby sources. The Philippine National Alcohol Commission has stated that, if cassava-based plants are built in the Philippines, they will be fueled with cassava stalks and wood from plantations of fast-growing "ipil-ipil" trees planted nearby to supply fuel to the ethanol plant. Such plantations have already been developed in the Philippines to support the government's charcoal and "dendro-thermal" power programs. The Victoria Milling Company distillery, which currently supplies all of the ethanol for the Philippine "Alcogas" program, burns a combination of bagasse and wood.

The use of wood fuel in distilleries in the United States has been restricted by the concentration of ethanol production in grain-growing areas which have limited forests. A major liquor distillery, the Jack Daniels plant in Lynchburg, Tennessee, uses green wood wastes from sawmills as fuel for two large boilers with steam capacities of 55,000 and 80,000 pounds per hour. Two of the companies which have received conditional loan guarantees to build ethanol plants from the U.S. Department of Energy plan to use biomass fuels. The Energy Conversion Corporation of Anderson, South

Carolina, will use wood wastes in a 20 million gallon/year plant, while Circle Energy Corporation of Garden City, Kansas, will use corn stover and dried feedlot manure in a plant providing 15 million gallons per year.

The previously described New Zealand wood-to-ethanol process uses the lignin by-product as a boiler fuel.

Thermal Gasification of Biomass

Biomass Technologies Inc. of Atlanta, Georgia, is testing a wood gasification system in a one million gallon/year ethanol plant. Wood chips and sawdust are converted to low-Btu gas (LBG) in an updraft gasifier; the gas is used as a boiler fuel for steam generation.

Biogas From Anaerobic Digestion of Biomass

Firms and institutions in several countries are experimenting with the use of biogas from the anaerobic digestion of biomass as a fuel for ethanol production. Biogas contains about 60% methane and can be burned in a boiler or used as a fuel for spark-ignition or diesel engines. Most of the work on biogas for ethanol plants involves the digestion of stillage.

The Asian Alcohol Corporation in Bacolod City, Negros Occidential, Philippines, is installing a biogas system using stillage from molasses; the system is based on a unit operated successfully by the Bacardi Rum Company in Puerto rico. The biogas will be burned in a high-pressure boiler and will ultimately provide up to 40% of the steam needed for a 250,000 liters/day molasses-based plant. Duarala Chemical Industries in Daurala, India, concluded that biogas from the digestion of stillage could provide up to 75% of a distillery's energy needs.

At a liquor distillery in China's Szechuan province, stillage from grains and sweet potatoes is converted to biogas in a 2,000 m^3 anaerobic digester, one of the largest in the world. The reported daily production is about 2,000 m^3 per day. Part of the gas is used in diesel engine/generators to produce about 600,000 kWh of electric power for the plant. Most of the remaining gas is compressed and used in three heavy trucks to save 50 tons of motor fuel annually.

Two organizations in Rio de Janeiro, Brazil, COPERFUL and ELETROBRAS, have operated a 400 m^3 digester to convert stillage to biogas. Using stillage from molasses, 26 m^3 of biogas was produced from each cubic meter of stillage. The Technological Institute of a Brazilian State of Sao Paulo has operated a 11 m^3 digester with stillage. The National Maize and Sorghum Research Center in Minas Gerais made biogas from cassava stillage and tested the residues as fertilizer.

The Guangzhou Intitute of Energy Conversion in China has operated two 31 liter anaerobic filters with ethanol stillage; one was filled with layers of stones, while the other had layers of coal stove clinkers. Both the volume of biogas produced and the percentage of methane in the biogas were much higher than from biogas plants in China using animal manures.

A study is being made of the feasibility of making biogas from the waste stream from the New Zealand wood-to-ethanol process; the stillage from the process contains nearly 37% of the original dry weight of the wood.

Osaka City University and the Mitsui engineering company in Japan concluded that biogas fuel for a plant using sweet potatoes could be produced by the anaerobic digestion of stillage and the stems and leaves of the sweet potato. The University of Sydney tested the anaerobic digestibility of cassava stalks and leaves which might be used to make biogas fuel for a cassava-based plant.

Biogas from animal manures has been used in farm-scale ethanol plants. At the University of Missouri in Columbia both electricity produced in a biogas-fueled engine/generator and waste heat from the engine are used in a farmscale-ethanol plant. The SumX Corporation of Austin, Texas, will use 130 m^3/day of biogas from pig manure in a 80 liter/day still.

NON-TECHNICAL FACTORS IN PLANNING ETHANOL PROJECTS

Size of Plants

As indicated in previous sections, there are substantial economies of scale in ethanol production. If all the prerequisites are available, costs of production per liter can be reduced by building rather large plants. However, somewhat smaller plants are often necessary due to some combination of (a) limitations on the feedstock supply, (b) the difficulty and expense of transporting the feedstock to the plant from distant locations, and (c) the need to minimize the capital cost of the plant.

It is particularly important that the capacity of the plant be matched by a secure and readily available supply of feedstock. Any ethanol plant must operate at full capacity during the maximum feasible season; any reduction of the feedstock supply means reduced ethanol production and higher capital and operating costs per liter. If feedstocks are to be provided by new plantations or new arrangements with small farmers, these should be realistically planned and carefully managed.

Impacts on the Community and Environment

Planning for an ethanol project should include careful consideration of the impact of the project on the use of land and agricultural labor for food prodution and thus on the supply and price of food. Because of the large areas of underutilized land, Brazil has apparently been able to operate its large ethanol program without a significant negative impact on food supplies; however, there have been reports of increased food prices in some areas due to increased sugarcane production.

Planners should also carefully examine the probable impacts of a proposed project on (a) employment patterns and income distribution in the project area, (b) housing and community facilities near the plant, (c) roads and other facilities to be used for the transport of feedstocks, ethanol, an by-products, and (d) the physic environment, especially land or stream which may be affected by the handling c disposal of stillage.

Economic Feasibility of Projects

The overall economic viability of proposed ethanol project is influenced b many factors including capital cost feedstock costs, fuel costs, labor and othe operating costs, income from the sale c by-products and the market or controlle prices of ethanol and of gasoline. Thes costs and prices vary from region to regio and country to country; economi evaluations of projected ethanol plants ar rarely transferable from one region o country to another. Each type of cost mus be carefully examined and realisticall estimated in light of local conditions at th proposed site. At present it seems pruden to avoid comparative figures on th projected costs of ethanol and gasolin which are based on high rates of futur escalation in world oil prices, although suc assumptions have been common in recen years.

Evaluating Experience with Comparabl Projects

It may be crucially important fo energy planners who are considering particular project to obtain full informatio on similar or related projects in othe countries. There are many limitations o the availability of such informatio including those arising from the desire o firms to protect proprietary technica information and the reluctance of agencie to discuss projects which have not been ver successful. Information should be sought from all possible sources includin consultants and direct contacts wit agencies and firms. Reliance on a singl source of information may be dangerous i the source has a strong bias or veste interest in a particular process.

The name and address of the perso responsible for any project mentioned i this report will be provided upon request t the Editor at the address indicated on p. 24.

THE PRODUCTION AND USE OF METHANOL

Methanol, also known as methyl alcohol or wood alcohol, has one less carbon atom than ethanol. Its heat of combustion or energy content is about 22% less than ethanol and only about half that of gasoline.

Methanol is produced by the synthesis of two parts of hydrogen and one part of carbon monoxide. Until the 1920's these gases were obtained from thermal gasification or destructive distillation of wood. In recent decades methanol has been produced in the chemical industry from hydrogen and carbon monoxide obtained from natural gas. It can also be produced from coal. However, in the 1970's and 1980's there has been renewed interest in the production of methanol through the thermal gasification of biomass, especially wood wastes and the cellulosic portion of municipal solid waste.

The production of methanol from wood includes the following steps: (a) partial oxidation of the feedstock; (b) cleaning and cooling of the crude gas; (c) removal of carbon dioxide with potassium carbonate and monoethanolamine; (d) removal of nitrogen and hydrocarbons with a low-temperature (cryogenic) process; (e) adjustment of the ratio of the gases; (f) conversion of the resulting "synthesis gas" to methanol in a zinc chromium catalyst reactor; and (g) refining the crude methanol in a distillation column to remove higher alcohols.

A U.S. Forest Service study in 1977 concluded that the production of methanol from wood residues was technically feasible but not economically attractive. The study estimated that a plant producing 50 million gallons (189 million liters) of methanol from wood wastes would have cost about $64 million in 1975. The methanol would contain only about 38% of the energy input into the plant.

The U.S. Department of Energy concluded in 1979 that the only economically attractive methanol plants in the U.S. would be very large plants which produced from 20,000 to 50,000 barrels (or up to nearly six million liters) per day. These huge plants would cost from $500 million to one billion dollars. However, if such plants were built, methanol should be cheaper than ethanol.

The Brazilian government has contracted wth the Energy Company of Sao Paulo (CESP) to build three wood gasification plants and conduct experiments on the production of methanol from eucalyptus wood. There is also considerable interest in methanol in Sweden, which had substantial experience with gasification during World War II, and in Canada.

Up to 15% methanol can be added to gasoline without requiring engine modifications. The problem of phase separation due to the presence of moisture is greater with methanol than with ethanol. However, its ability to mix with gasoline is enhanced by the presence of small quantities of anhydrous ethanol or higher alcohols, expecially isopropyl and butyl alcohols. During the 1970's the Swedish Methanol Development Company conducted two million miles of road tests with a blend of 82% gasoline, 15% methanol, and 3% isobutanol. Phase separation problems were not encountered.

Engine modifications for the use of 100% methanol in spark-ignition engines are similar to those described on p. 3 for the use of straight ethanol. Since methanol has less than half the energy of gasoline, fuel consumption may be 60 to 100% higher than with gasoline.

In the U.S. the National Aeronautics Association is sponsoring tests of 100% methanol in jet aircraft engines.

Methanol and diesel oil will not form a stable mixture; advance blending is not feasible. Volvo of Sweden used "dual-fueling" techniques, similar to those for diesel oil and ethanol, with two fuel tanks and two injection systems. CESP in Brazil replaced 50% of the diesel oil with methanol in a diesel-electric locomotive, using two electronically-controlled fuel systems.

RESEARCH REPORT: PLANT OILS AS FUELS FOR DIESEL ENGINES

Recently a number of universities, research institutions, and vehicle manufacturers have experimented with the use of oils from the seeds or nuts of plants as fuels for diesel engines.

An International Conference with Plant and Vegetable Oils as Fuels was held in Fargo, North Dakota, in early August. About 230 participants from 16 countries heard 44 papers on the technical and economic aspects of the production, extraction, and use of fuels of oils from plants. Many of the papers covered extensive engine tests using straight plant oils, blends of plant oils with diesel fuel, and ester fuels made from plant oils and alcohols. This Research Report is based primarily on the papers and discussion at the Fargo conference.

Most of the experiments have used sunflower oil, soybean oil, peanut oil, cottonseed oil, rapeseed oil, or coconut oil. However, a U.S. Department of Agriculture report on oilseed yields lists 36 plants and trees, including many grown in a number of developing countries.

1. Use of Straight Plant Oils & Blends

In virtually all of the short- and medium-term tests of straight plant oils and of blends of plant oils with diesel fuel, the engine performance was very similar to that with diesel fuel. Although the plant oils contain from 5 to 15% less energy than diesel fuel, most tests have indicated somewhat higher thermal efficiencies. As a result, power output is usually only slightly below that with diesel fuel; fuel consumption is somewhat higher. The Department of Agriculture and Fisheries in South Africa reported only a 3% drop in engine power and a 10% increase in fuel consumption in tests of straight sunflower oil in tractors. North Dakota State University engineers found that almost full horsepower was maintained in a 6 cylinder farm tractor fueled with 25% sunflower oil and 75% diesel; horsepower dropped slightly when the blend was reversed (75% sunflower oil and 25% diesel).

Power outputs from a motorboat engine, a 25 kVA engine-generator, and a diesel-powered jeepney, all operated on coconut oil at the University of the Philippines, were very similar to the power with diesel fuel. The jeepney ran 10.41 km on a kilogram of coconut oil, compared to 13.1 km per kg of diesel fuel.

Despite these encouraging results from shorter-term experiments, longer-term tests indicated that plant oils and blends of these oils with diesel fuel can have serious adverse effects on direct injection (DI) engines, the most common type of diesel engines.

Virtually all of the tests of plant oils and blends in DI engines have produced rather heavy coatings or deposits around the injector nozzles. In addition, most of the tests resulted in substantial deposits of carbon or gum on other engine components including cylinders, pistons, and rings. International Harvester engineers stopped a durability tests of a blend of equal parts of cottonseed oil and diesel fuel in a DI engine after 183 hours when heavy deposits in the ring grooves and severe scoring of the cylinders were discovered. After a long-term test of 25% sunflower oil and 75% diesel fuel at North Dakota State University, heavy deposits were found on the injector nozzles, valve stems, cylinder sleeves, and compression rings. Tests of sunflower oil at the University of Manitoba in Canada left heavy gum and wax deposits in the engine.

These carbon and gum deposits are believed to be caused by the viscosity of the plant oils which is more than ten times as high as diesel fuel. The high viscosity leads to poor atomization of the fuel and inefficient combustion; residues of partially combusted fuel remain in the engine to form deposits or to contaminate the lubricating oil.

The Southwest Research Institute found that heating the oil reduces the deposit

problem. Volkswagen of Brazil drove a diesel-powered vehicle for 4,000 km without problems using peanut oil preheated in a heat exchanger to 60 to 70°C. A diesel-powered truck has been operated for several years by Progressive Farming magazine in Alabama on 30% soybean oil and 70% diesel fuel, using an electric block heater which is plugged in at night to keep the oil warm and permit easy starting in the morning.

Several institutions have tried fuel additives to control engine deposits, but few of these have been helpful. None of the three additives tested at Louisiana State University provided an overall reduction in injector deposits from the use of a blend containing 20% soybean oil. Only a few of the many additives tested by the South African Agriculture Department showed some promise of usefulness in reducing deposits from the use of sunflower oil. Several additives tested at the University of Idaho were ineffective in reducing the rate of oxidative polymerization of rapeseed oil.

Some of the tests of plant oils and blends have indicated serious contamination of the lubricating oil with unburned, polymerized fuel and/or metals. An alarming increase in the amounts of iron, lead, and chromium in the lubricating oil samples was noted in tests of blends of 25% and 50% soybean oil with diesel fuel at the University of Missouri. International Harvester also reported a sharp increase in metals concentration in the lube oils in 200 hour durability tests of a blend of equal parts of cottonseed oil and diesel fuel.

There are indications that the problems of engine deposits and lubricating oil contamination are more serious with some plant oils than with others. The most frequently tested oils (sunflower oil and soybean oil) have relatively high iodine numbers wich measure the tendency of a thin film of oil to form a skin or deposit. Coconut oil has an iodine number of only 10, compared to 130 for soybean oil; this lower value may account for the lack of reported problems with engine deposits in the tests of coconut oil in the Philippines. In those tests the principal problem was the solidification of the coconut oil in cool weather; research at the University of California at Davis indicated that coconut oil tends to congeal as temperatures drop below about 25°C. This problem was solved in the Philippines by adding some diesel fuel to the coconut oil; a mixture of 70% coconut oil and 30% diesel fuel was recommended for winter operations.

Some research indicates that straight vegetable oils or blends can be used in indirect injection (IDI) engines without carbon deposit or oil contamination problems. In these engines, which are used on some types of heavy construction vehicles, the fuel is injected into a small pre-combustion chamber rather than directly into the cylinder. The Catepillar Tractor Company used 100% soybean oil in field tests of five tractors with IDI engines; after 2,000 to 3,000 hours the engines showed no abnormal wear or unusual deposits. Catepillar has approved the use of blends of 30% soybean oil and 70% diesel fuel in construction tractors with IDI engines in Brazil.

Several developing countries have indicated interest in the use of palm oil in diesel engines. However, engine tests at the University of California at Davis showed limited atomization, knocking problems, and a thermal efficiency well below that of diesel fuel. Other constraints include the competitive use of palm oil in food and soap industries, a current world price nearly twice that of diesel fuel, and the eight year period needed to bring new palm groves into production.

No engine tests have been reported on oil from the seeds of the Chinese tallow tree (Sapium sebiferum), which Battelle researchers believe could produce 200 gallons of oil per closely-planted acre, or from the buffalo gourd (Cucurbita fotidissima). The Center for Development Technology at Washington Unversity in St. Louis, Missouri, has suggested that the oil yield from the gourds might exceed 300 gallons per acre on semi-arid land.

2. Use of Esters of Plant Oils

When a plant oil is mixed with an alcohol in the presence of a suitable catalyst, a chemical process known as transesterification transforms these materials into an ester, which can be used as a diesel fuel, and a by-product, glycerol. The preparation of ethyl esters with ethanol requires somewhat more time and energy than the production of methyl esters using methanol; most of the recent experiments with esters have used methyl esters. However, the Brazilian government is now promoting research on ethyl esters in the hope of finding a way to use some of the current Brazilian surplus of ethanol to make fuel for diesel engines.

Research on the use of esters has been spurred by the prospect of using transesterificaton as a solution to the engine problems caused by the high viscosity of the plant oils. Due to the removal of the heavy glycerol, the viscosity of the ester fuels is much lower than that of the plant oils from which they are made. The South African researchers found that the viscosity of twelve methyl and ethyl esters of plant oils ranged from 4.2 to 5.2; all were not far from the viscosity of diesel fuel (4.1).

Engine performance with esters of plant oils was very similar to that with diesel fuel. Power output from the twelve esters tested in South Africa ranged from 44.4 to 45.5 kW; the engine produced 45.1 kW with diesel fuel.

Several of the tests indicate that ester fuels can be used in direct injection engines without the carbon deposits which accumulated when straight plant oils and blends are used in such engines. The South African researchers ran a DI engine for more than 1300 hours on an ethyl ester of sunflower oil with only those engine deposits which are normal with diesel fuel. Mercedes-Benz of Brazil obtained similar results in endurance tests of a methyl ester of soybean oil in a DI engine. The Unversity of the South Pacific in Fiji had good initial results with an ethyl ester made from coconut oil.

However, most of the long-term tests with esters have showed serious problems with lubricating oils. Chemical Specialties of Brazil, which ran extensive tests with a methyl ester of soybean oil, found that a gelatinous deposit formed in the crankcase after 200 to 250 hours. Mercedes Benz of Brazil reported that, after an endurance test of the same ester in a DI engine, the oil filter and other engine parts were coated with a thick black paste of polymerized fuel. Lubricating oil viscosity continued to drop during a 100 hour test of an ethyl ester from soybean oil at Kansas State University. Volkswagen of Brazil also reported up to 20% oil dilution when using soybean esters. A joint VW/Texaco study in Brazil concluded that the extent of the degradation of the lubricating oil is determined by the amount of unsaturated fatty acids in the fuel. A solution to this lubrication problem must be found before esters of plant oils can be widely used as fuels for diesel engines.

3. Economic Feasibility of Plant Oil Fuels

Papers presented at Fargo indicated that the economic feasibility of the use of plant oils as fuels would depend on the cost of producing the oilseeds, the cost of extracting the oil, and the comparative cost of diesel fuels. Oilseed production costs are influenced by cropping patterns and yields per hectare. Oil extraction costs depend on the type and size of facility; considerable economies of scale reduce costs per gallon at larger plants. Several studies indicated that plant oils could not compete with diesel fuels in the U.S. at current prices, but might become important fuels if diesel fuel prices rose considerably or supplies are inadequate. No studies were presented at Fargo on the costs of plant oil fuels in developing countries.

One country is not waiting for further studies. On July 1 the Philippine government began a new program to add 2 to 3% coconut oil to all diesel fuel used in the country. The program will utilize 60,000 tons of surplus coconut oil per year and reduce diesel fuel imports.

AN APPEAL TO READERS

Future Reports in this series are planned on the production and use of wood for energy, on biomass energy for agriculture, and on biomass fuels for electric power generation. Organizations planning or carrying out projects in these sectors are urged to send information on them to Bioenergy Systems Reports, P.O. Box 591, Front Royal, Virginia USA 22630. The Editor expresses his sincere thanks to all those who have provided information used in this Report.

DISTRIBUTION OF THESE REPORTS

Energy agencies and research institutions in developing countries will be added to the mailing list for these Reports if a request is sent to the above address. Copies of earlier Reports may also be requested. The first Report (March 1982) covered the production and use of biogas in developing countries. The second Report (June 1982) surveyed the thermal gasification of biomass, the production of charcoal, and the use of agricultural residues in thermal conversion systems.

Some Reports will deal with topics of special interest to other colleagues within the reader's agency or institution; readers are urged to pass these reports on to the appropriate official or specialist. Additional copies may be available from USAID missions.

PUBLICATIONS

1. Liquid Fuels From Biomass:

Alcohol Production from Biomass In The Developing Countries, 1980, 69 pages, The World Bank, 1818 H Street NW, Washington, D.C. USA 20433.

Potential For Alcohol Fuels In Developing Countries (To be published in late 1982 by the Board on Science and Technology for International Development, National Academy of Sciences, 2101 Constitution Avenue, Washington, D.C. USA 20418.).

Fuel Alcohol: Energy and Environment In a Hungry World, by Bill Kovariks, 1981, pages, 10 Percy Street, London W1P 0DR, UK. $6.25.

Fuels From Sugar Crops: System Study For Sugarcane, Sweet Sorghum, and Sugar Beets 1978, Battelle Columbus Laboratories, 137 pages, National Technical Information Service, Springfield, VA, USA 22161, $4.75.

Ethanol From Sugar Crops, 1981, by E. S. Lipinsky et al, Battelle Columbus Laboratories, 94 pages. (Available from AID by special request through USAID missions).

Vegetable Oil Fuels (Proceedings of the International Conference on Plant and Vegetable Oils as Fuels, August 1982), American Society of Agricultural Engineers, 2950 Niles Road, St. Joseph, Michigan, USA 49085, $23.50.

International Bioenergy Directory, 1981, 1201 pages, Bio-Energy Council, 1625 Eye Street N.W., Washinton, D.C. USA 20006, $90.00.

2. Other Bioenergy Topics:

Biomass For Energy In The Developing Countries, 1982, by D. O. Hall, G. W. Barnard, and P. A. Moss, 220 pages, Pergamon Press, Elmsford, New York USA 10523, $20.00.

Strategies and Technologies For Implementing Rural Biogas Programs In Latin America, 1982, 67 pages, Latin American Energy Organization (OLADE), Casilla 6413 C.C.I., Quito, Ecuador.

Biogas: Una Biblographia Mundal (A World Bibliography), 1981, 207 pages, Inter-American Institute for Cooperation on Agriculture (IICA), Apartado Postal 55, 2200 Coronado, San Jose, Costa Rica (most listings in English).

Biogas Handbook, 1982, 133 pages, Documentaton Centre, Tata Energy Research Institute, Bombay House, 24 Homi Mody Street, Bombay 400 023, India.