Bioenergy Systems Report

SEPTEMBER 1984: DOWNDRAFT GASIFIER/ENGINE SYSTEMS

INTRODUCTION

Several Bioenergy Systems Reports have provided information on various aspects of the thermal gasification of biomass and on the use of the "producer gas" from these processes as a boiler fuel or other heat source or as an engine fuel. A broad survey of thermal gasification systems was provided in pages 2 to 11 of the June 1982 Report on "Thermochemical Conversion of Biomass to Energy." Pages 3 to 7 of the March 1983 Report on "Bioenergy for Agriculture" covered the use of gasifier/engine systems to provide mechanical or electrical power for agricultural production and processing.

The use of gasifiers to provide fuel for power generation was reviewed in pages 2 to 12 of the June 1983 Report on "Bioenergy for Electric Power Generation." Various sections of the December 1983 Report on "Bioenergy From Crop Residues" covered the use of crop residues in thermal gasification systems. These Reports, like most of the available literature on gasification activities, emphasized descriptions of individual gasifier projects rather than the comparative analysis of the design and performance of various gasifier systems.

This Report is confined to the generation of producer gas in downdraft gasifiers and the use of such gas in internal combustion engines. With only a few exceptions, producer gas for use in engines has been generated in downdraft gasifiers. In these units the air enters above the hearth; the gas passes down through the hottest part of the chamber and exits through the grate at the bottom. Some of the tars in the gas are cracked as the gas passes through the hearth. For this reason gas from downdraft gasifiers is more suitable for use in engines than that from other types of gasifiers, although the gas must first go through a gas conditioning train for the removal of particulates, moisture, and remaining tars.

Updraft and fluidized bed gasifiers have been most widely used to generate producer gas for burning as a boiler fuel or in other heat applications. The exclusion of these other types of gasifiers and other uses of producer gas from this Report is not intended to indicate any conclusions as to the potential usefulness of these other gasifiers and appplications in developing countries.

In contrast to earlier emphasis on descriptions of individual gasifier projects, this Report examines in turn each of the basic segments of a downdraft gasifier/engine system, providing available information on alternative designs and techniques which have been used in various systems. Part I (pp. 3 and 4) examines the essential characteristics of any fuel to be used in a downdraft gasifier. Part II (pp. 5 to 11) reviews essential features or components of the gasifier, including fuel feeding, air intake, hearth design, and ash removal. The various components which have been used in gas cleaning trains for gasifier/engine systems are examined in Part III (pp. 12 to 17). Part IV (pp. 18 to 20) outlines several factors which affect the energy content of the producer gas. Part V (pp. 20 to 23) covers the documented experience with the use of producer gas in

The reports in this series are compiled and written by Dean B. Mahin, International Energy Projects, P.O. Box 591, Front Royal, Virginia USA 22630, telephone (703) 636-2126, under a contract with the Tennessee Valley Authority funded through the Bioenergy Systems and Technology Project of the U.S. Agency for International Development.

gasoline and diesel engines including the extent of replacement of conventional fuels and the power output of the engines with producer gas. Part VI (pp. 24 to 28) provides an overview of factors which influence the economic feasibility and cost effectiveness of gasifier/engine systems.

Although there has been extensive experience with gasifier/engine systems in many countries in this century, the available record of this experience is rather limited and has not been widely shared. Over a million vehicular gasifiers were built in Europe during World War II. Although gasification technology was dormant for several decades, gasifier/engine systems have been tested and/or used in at least 25 countries since the late 1970's. However, the record of earlier experience with gasifier systems is not readily available and the more recent experience has not been very well documented or widely shared.

The factors restricting the international sharing of experience with these systems have included the limited instrumentation and monitoring of many of the systems, the desire of some manufacturers to protect confidential or "proprietary" information on design features and system performance, and the reluctance of some agencies to provide full information on projects which were not fully successful. All of these factors have limited the scope of the information available for the preparation of this Report. Despite these limitations, a sizeable and growing body of information is available on experience with downdraft gasifier/engine systems, and this Report has been designed to contribute to the wider sharing of this experience.

The information in this Report on specific gasifier systems is drawn primarily from reports by researchers and manufacturers; independent evaluations of gasifier systems are rare. A substantial effort has been made to analyze the available information, but the Editor can not accept responsibility for the accuracy of specific technical data. The organization of the Report has not permitted a complete description of any of the systems, but most of them have been fully described in the earlier BSR's listed on p. 1. Copies of these Reports may be requested from the Editor.

An initial draft of this Report has been reviewed by the following persons who have extensive experience with gasifier/engine systems: Dr. John R. Goss, University of California at Davis; Mr. John Kadyszewski, Bioenergy Systems and Technology Project of the U.S. Agency for International Development; Mr. Matthew S. Mendis, The World Bank; Mr. M. A. Trossero, Food and Agriculture Organization of the United Nations; Dr. Bjorn Kjellstrom, the Beijer Institute, Royal Swedish Academy of Sciences; Dr. George Breag and Mr. A. C. Hollingdale, Tropical Development and Research Institute, England; Mr. Geoffrey Barnard, Earthscan, England; Mr. Ludovic Lacrosse, Forestry Technology Station, Belgium; Dr. Ibarra E. Cruz, Energy Research and Development Center, Philippines; and Professor Naksitte Coovattanachai, Prince of Songkla University, Thailand. Some of the statements and conclusions in the initial draft have been modified to incorporate the experience of these reviewers. The Editor is very grateful for this assistance but retains the ultimate responsibility for the content of this Report.

The Reports in this series are sponsored by the Bioenergy Systems and Technology Project of the U.S. Agency for International Development. Along with other information and educational activities sponsored by the Project, these Reports are designed to contribute to the wider international sharing of experience with systems and technologies which may be suitable for the conversion of biomass to energy in developing countries.

Dr. Paul Weatherly is the project manager for the BST Project in the AID Office of Energy. Staff support for the project is provided by a team from the Tennessee Valley Authority; the team is based near the AID Office of Energy in Rosslyn, Virginia. Correspondence concerning Project activities should be addressed to: S&T Office of Energy, Room 509, SA-18, AID, Washington, DC 20523. Telephone (703) 235-8902.

PART ONE:
BIOMASS FUELS FOR GASIFIER SYSTEMS

The suitability of any form of biomass for use in a downdraft gasifier is determined primarily by three factors: (a) the ash content of the fuel, (b) the moisture content of the fuel, and (c) the size and shape of the particles of biomass. However, the volatile content, fixed carbon content, heating value, char durability, and bulk density of a fuel can also affect its performance in a gasifier.

The ash content of some crop residues greatly limits their use in downdraft gasifiers. Rice hulls, the most readily available form of biomass in most rice producing countries, contain 15 to 23% ash. The high ash level leads to two main types of problems when the hulls are used in downdraft gasifiers: (a) More complex grates and ash removal equipment are needed to avoid or minimize the blocking of the flow of air and fuel. (b) If the fuel temperature at any point in the gasifier exceeds the ash melting temperature, the ash melts into slag and later resolidifies into clinkers which also block the flow of air and fuel, and retard ash removal.

A successful gasifier/engine system using rice hulls has been developed in China (see pp. 18-19 of the December 1983 BSR) and one of the Chinese units has operated for 15 years in Mali; however, rice hulls have not yet been used in gasifiers in most other rice-producing countries. Other high-ash residues include corn (maize) stalks, wheat straw, and cotton residues. These problems with high-ash fuels are described in greater detail in pages 11 to 22 of the December 1983 BSR on "Bioenergy from Crop Residues".

The moisture content of the fuel can limit the use or effectiveness of all types of biomass. In a few cases problems arise from too little moisture. Since almost all of the moisture is driven out of charcoal during carbonization, the hydrogen content of producer gas from very dry charcoal may be very low. In most climates the charcoal quickly reabsorbs enough moisture to avoid gas quality problems. In very dry climates the hydrogen content of producer gas from charcoal or other very dry fuels can be increased by injecting water into the gasifier. However, such problems of insufficient moisture in the fuel are much less common than problems arising from excessive fuel moisture.

All of the available comparative tests showed that the percentage of carbon monoxide (which accounts for about half of the energy in producer gas) is lower in gas produced with wet fuel than in gas from dry fuel. If the fuel has a high moisture content, too much of the heating value of the fuel is used in the conversion of the moisture to steam and in the subsequent reaction of the steam with carbon to form carbon dioxide and hydrogen. This use of heat limits the heat available for the conversion of carbon to carbon monoxide. (See pp. 18-19.) Some of the moisture is converted to combustible gases in the gasifier; however, some of it remains as steam which must be condensed out in the gas conditioning train before the producer gas reaches the engine. Moisture in excess of design levels limits the operation of the gas cleaning and cooling equipment.

Although some firms have claimed that their gasifiers can handle fuels with 25% or even 30% moisture, most sources indicated that fuel for downdraft gasifiers should have no more than 20% moisture. The capital costs of commercially available wood fuel dryers have been perceived as too high to permit their use in most gasifier systems. However, fuel dryers have been included in two systems. The wood gasification system assembled and tested in Alaska by Marenco, Inc. of Anchorage used a large batch dryer to dry green wood chips; the air was heated by the radiator of the system's large engine. A gasifier system built by the Fritz Werner Company in Germany includes a wood dryer heated with engine exhaust gases. Air drying can significantly reduce the moisture content of wood fuel, even in moist climates. In the Philippines wood earmarked for charcoal production is stacked along the roads for 90 days, during which it looses 30 to 35% of its weight due to the loss of moisture.

The sizing of the fuel for downdraft gasifiers is crucial in two ways. The particles must be small enough to enable the fuel to flow downward through the gasifier without bridging. On the other hand, the fuel should not contain a very high percentage of very small particles or these "fines" will fill up the spaces between the larger particles and block the flow of air and gas through the fuel bed. The resulting pressure drop restricts the flow of gas through the gas conditioning train and limits the gas supply to the engine. Such blockages can also produce uneven partial combustion, channeling, and "hot spots" which may exceed the ash melting temperature and thus produce slagging and clinkers.

Due to these problems, sawdust is usually considered an unsuitable fuel for use in downdraft gasifiers. Nevertheless, Missouri Gasification Systems of California, Missouri, has developed a series of sawdust gasifiers which seem to have operated satisfactorily with several types of engines. Most of the gasifiers operated in North America have used wood chips produced by the type of chipping machinery which prepares wood for use in pulp and paper mills; these chips usually range from about 1/2" to 2" (1 to 5 cm) in size. In World War II the widely used Imbert gasifiers required fist-sized chunks of wood; both the Duvant firm in France and the present Imbert firm in Germany recommend fuel pieces which are between 1/2" and 5" (1 to 12 cm) in size.

The proper sizing of wood fuel for downdraft gasifiers presents a challenge which merits greater attention from research institutions. While many sizes of wood chippers are commercially available, the economic feasibility of adding a chipper depends on the size of the system and the annual number of operating hours of the chipper. If a number of wood gasification units were installed in a given region, a truck-drawn chipper could make periodic visits to each unit to prepare the fuel needed until the next visit. For very small systems with modest fuel requirements, the purchase of chips from a central chipping service might be economically feasible. There have been few experiments with the use of manual labor to reduce the size of wood fuel for a small gasifier system. It is possible to prepare the fist-sized wood chunks preferred in some European systems by cutting slices from small-diameter trees or branches with hand tools, but the practical and economic feasibility of such fuel preparation methods remains to be demonstrated.

Most crop residues are already well sized or are easily chopped or crushed to an appropriate size. However, other characteristics have limited the use of these residues in gasifiers. The gasification characteristics of crop residues which are abundantly available in developing countries are described in the December 1983 BSR on "Bioenergy From Crop Residues."

Due to its brittle character, larger pieces of charcoal can be easily broken into sizes suitable for gasifiers. This ease of fuel sizing is one of several important advantages of charcoal as a fuel for downdraft gasifiers. Most of these advantages arise from the fact that most of the tars and moisture has been driven from the fuel in the process of carbonization. The use of charcoal permits a less expensive gasifier and a less elaborate set of gas cleaning and cooling equipment than is needed for wood gasification system (see p. 24). Because of its higher energy density, charcoal is less expensive to transport than wood fuels.

However, there are several very important disadvantages to the use of charcoal as a gasifier fuel. About 70% of the energy content of the wood is lost in the process of producing the charcoal. The energy content of gas made from charcoal is only about 65% to 75% of that of wood gas (see p. 18). The real cost of charcoal production, especially the labor costs, are substantial even if they do not involve the expenditure of money.

These and other important differences between charcoal and wood as fuels for downdraft gasifiers will be described in some detail in subsequent sections of this report.

PART TWO: GASIFIER CHARACTERISTICS

Each downdraft gasifier must have design features providing for (a) fuel feeding, (b) the intake of combustion air into the hearth of the gasifier, (c) the creation of sufficiently high temperatures in the hearth, (d) the removal of ashes from the hearth zone and from the ash container, and (e) the outward flow of the producer gas.

1. Fuel Feeding

Almost all charcoal gasifiers and most of the smaller wood gasifiers are manually loaded through an air-tight lid at the top of the gasifier. The spring-loaded lids are designed to pop open in the event of a gas explosion. Since these are suction plants operating on negative pressure from the engine and/or from a small fan, there is not much gas leakage when the lid is opened. The only exceptions to the air-tight lids have been a few units, described on page 9, in which the combustion air enters from the top of the gasifier with the fuel rather than through separate air intake ports.

The gasification process depends on controlling the supply of air (oxygen) to the gasifier. In larger wood gasification systems, maintaining an adequate flow of fuel while limiting both air intake and gas leakage has proven difficult. The most common fuel feeding technique in large systems has used a "lock hopper" with two sets of air-tight doors, only one of which can be opened at any one time. When the upper doors are opened to admit fuel, the lower doors remain closed; when the upper doors are closed again, the lower doors can open to allow the fuel to fall into the gasifier.

In an Imbert system tested by the Saskatchewan Power Corporation in Canada, a lock hopper was filled every twenty minutes by an operator using a bucket elevator. Another Imbert system at Snowshoe Industries in northern Canada has a pile-height sensor inside the gasifier which opens the top doors of the lock hopper and activates a conveyor belt to fill it. However, the sensor has not proved reliable due to tar accumulation. Moreover, excessive air admitted with the fuel reduces the concentration of carbon monoxide and hydrogen in the producer gas and is considered the main cause for frequent stalling of the engine soon after fuel feeding.

The Thomas Miles engineering firm in Oregon has designed a feeding system which is used with five large biomass gasifiers at research institutions in th U.S. The fuel enters through a charge hopper, passes through a lock hopper, and falls into a pressurized metering bin; a variable rate injector screw feeds the fuel horizontally from the meter bin to the gasifier. Feed rates can be adjusted from 50 pounds/hr to 5 tons/hr. The Marenco system tested in Alaska initially used a 10" (25.4 cm) diameter screw auger for fuel feeding, but it proved impossible to operate the system for more than an hour without bridging at the entry or exit points or jamming in the auger. The auger was replaced with an automatically controlled lock hopper.

A reciprocating ram-type fuel injector was used with two gasifiers at the University of Florida. Each movement of the ram, operated by a battery-powered 12 Volt hydraulic pump, forced 11.5 liters of fuel though the sealed and gasketed lid of the fuel hopper. A piston pushes the fuel from a vertical fuel chamber to the hearth of the new semi-horizontal gasifier developed by the Duvant Company in France. Imbert in Germany is also reported to be developing a piston-type fuel feeder.

Fuel bridging has been a serious problem in several systems. The Jyoti Solar Energy Institute in India found that the use of a central air pipe in small gasifiers restricted the fuel flow and increased bridging. If the gasifier is mounted on the same frame as the engine, vibrations from the engine may help avoid fuel bridging. A large wood chip gasifier tested in California had an automatic shaker which was activated during refueling to minimize bridging problems.

In plants operating on negative pressure or suction, the fuel feeding system must be designed to avoid the intake of excess air; in the few supercharged plants operating with positive pressure, the fuel feeding system must avoid gas leakage. The Alaska system, which operated at a positive pressure created by a 10 HP combustion air blower, used a series of automatic controls to avoid gas leakage. When the level control in the gasifier signalled the fuel was needed, the bottom doors of the lock hopper opened to refuel the gasifier. When the doors were reclosed, a solenoid valve opened a vent to release the three to four pounds of pressure in the hopper. Then the vent closed, the upper doors opened, and the hopper was refilled with fuel from a conveyor belt.

2. Air Intake

In the majority of gasifiers the air is admitted to the hearth through a number of nozzles known as tuyeres. They are usually arranged in a ring a few inches above the narrow throat of the gasifier, as indicated in the sketch below of a gasifier built by Biomass Corporation, a California firm which is no longer in business. In most designs the air flows from a single exterior air intake port via a somewhat circuitous route within the gasifier shell, picking up heat from the hearth and from the outgoing producer gas before entering the tuyeres. In some models the air goes more directly to a doughnut-shaped annulus surrounding the hearth and then to tuyeres; however, the tuyeres closer to the air intake port receive more air than those farther from the air supply, and this uneven distribution of the air leads to uneven combustion in the hearth. A simpler design eliminates the air preheating feature and brings air in directly for each tuyere. In the charcoal gasifiers used in various mobile and stationary applications in the Philippines there are about six air intake ports around the circumference of the gasifier; each is connected by a separate pipe to one of the tuyeres.

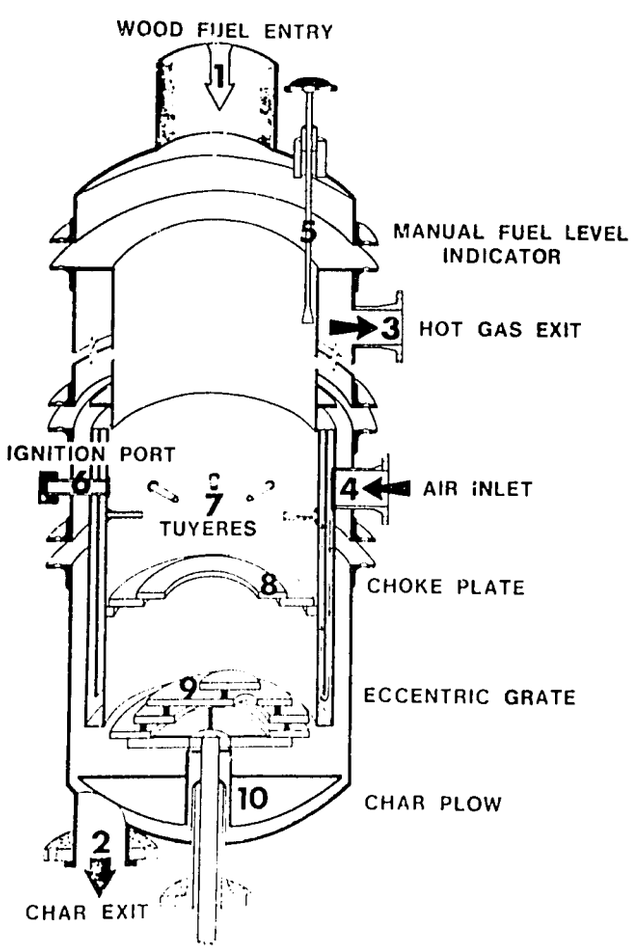

Some gasifiers have a central air pipe which brings the combustion air in from the top or sides of the gasifier; the pipe reaches down through the fuel to a point near the center of the throat. Central air pipes with ferrochrome tips were used in the most numerous types of charcoal gasifiers in Sweden during World War II. This type of air intake has been used in several gasifier designs developed by Twente University of Technology in The Netherlands including corn cob gasifiers designed for use in Tanzania. In the latter units the pipes were made of cheap galvanized water pipe; they lasted only about 250 hours but were easily replaced. A Dutch firm, Energy Equipment Engineering, also uses central air pipes in its gasifiers. The basic Twente Univeristy design is shown in the sketch on the opposite page.

The central air pipes seem to be more appropriate for gasifiers using charcoal and other low-tar fuels. There are some indications that when these gasifiers are used with wood or other high-tar fuels the air pipes tend to interfere with the downward flow of the fuel, limit the contact between fuel and air, and inhibit the breaking down of the tars. A Swedish study

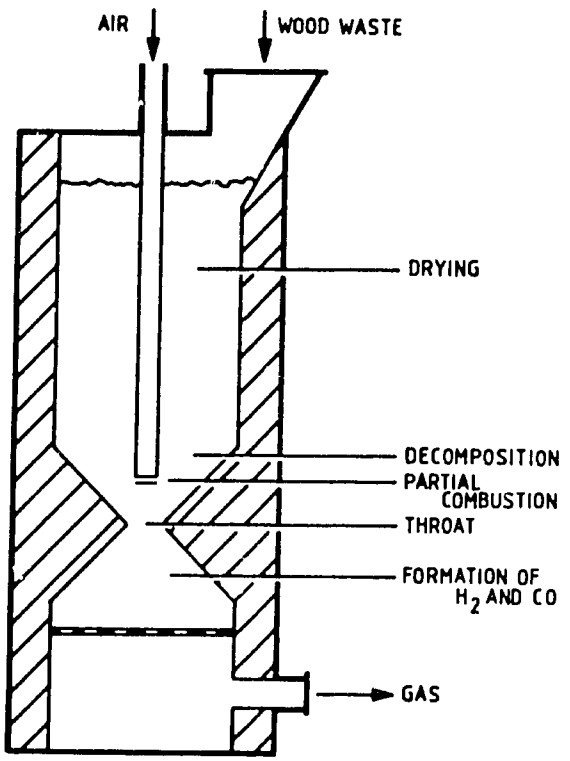

indicated that fuel flow problems were the main reason why central air pipes were rarely used in wood gasifiers in Sweden during World War II The Jyoti Solar Energy Institute in India tried a central air pipe in an initial prototype wood gasifier recently, but the pipes impeded fuel flow and were replaced by conventional tuyeres in a second prototype.

A coir dust gasifier built by the Universty of Peradeniya in Sri Lanka had a central air pipe which released the air 360 mm above the throat; however, the air pipe created channeling effects in the pyrolysis zone which resulted in excessive production of tars and the clogging of the cooler and filter.

Researchers at the University of the Philippines and the Prince of Songkla University in Thailand have improved the energy content of the gas in charcoal gasifiers by using both a central air pipe and conventional tuyeres. A system designed for rice hulls at the Philippine institution has a central air pipe but tuyeres also feed air to a secondary combustion area below a perforated conical throat. The tar in the gas is substantially reduced. (See sketch on p. 17 of December 1983 BSR.)

The natural suction provided by the system's engine provides sufficient air for most of the charcoal systems and some wood gasification systems, although the adequacy of the natural suction depends on the size of the engine and extent of the pressure drop created by the passage of the gas through the gas conditioning train. Some engines are started with liquid fuel. In other systems a hand-powered or battery-operated fan provides the suction needed for startup. These fans are usually installed to by-pass the engine and send the initial gas to a flare until gas quality is high enough for engine use.

A continuously operating fan or blower is built into most of the medium-sized and larger wood gasification systems. Both startup and continuously operating fans are usually downstream from the gasifier and gas cleaning units to provide negative pressure in these units and thus minimize the danger of carbon monoxide leakage from joints and fittings.

A few systems operate on positive pressure. The Alaska system used a 10 HP positive displacement blower to provide up to five pounds of pressure per square inch in the gasifier and gas cleaning train; the blower consumed 6.6 kW of power per hour. The 500 kW Duvant wood gasifiers which are being installed in the Philippines use air compressers to provide pressurized combustion air for mixing with recycled pyrolysis gas (see p. 10), as well as suction fans to pull the gas through the gas cleaning train.

There have been problems in several systems with obtaining the optimum flow of both air and gas. Researchers in the Seychelles found that their engine was not receiving sufficient gas at full load and concluded that a larger fan was needed. In some systems variations in the flow of gas to the engine are minimized by the use of some type of gas storage device. The larger Imbert systems (200 KVA and above) include a gas equalization tank between the cleaning train and the engine. The system

in the Seychelles used a 40 m^3 plastic balloon in the same location to provide an even flow of gas to the engine.

Many gasification systems include some means of preheating the combustion air before it reaches the hearth of the gasifier, in order to increase the crucial hearth temperatures. Air preheating was common although not universal in the gasifier systems used in the cold climates of northern Europe in World War II. In the most common type of internal preheating the air flows through a chamber between the inner and outer shells of the gasifier, absorbing heat from the hearth while it is en route to the tuyeres. However, in such designs the heat for air preheating is taken from the very point where it is most needed, the hearth zone of the gasifier.

More effective internal air preheating is provided by designs which take the heat from the hot producer gas after it has already left the hearth. Some gasifiers, including the Biomass Corporation unit shown on page 6, have two narrow chambers outside the hearth which are in effect a heat exchanger; the gas exits through one chamber, transferring some of its heat to the incoming air in the other chamber.

Several gasifier systems have used an external heat exchanger to heat the incoming air. In a large wood gas system Energy Equipment Engineering in The Netherlands uses a heat exchanger between the gasifier and the gas cleaning train; the heat exchanger also serves as a gas cooler, reducing the gas temperature from 500°C to 200°C. The gas then flows to a cyclone for particulate removal. This arrangement conflicts with the need for high intake velocity to maximize the efficiency of the cylcone (see p. 12). However, this problem can be overcome by reducing the flow area at the inlet. In the Alaska wood gasification tests a heat exchanger for heating intake air was installed initially after the cyclone; the gas flowed through the inner tube of a vertical heat exchanger which transferred heat to the intake air en route to the gasifier. However, tars and other condensibles from the gas soon closed the tubes; subsequently, the heat exchanger was removed from the gas line and the intake air was heated with exhaust gases from the system's large engine.

3. Hearth Designs

In the great majority of the gasifiers which have been built around the world the gasifying fuel must pass through a constriction or "throat" near the bottom of the unit which has a considerably smaller diameter than the main gasifier chamber. This design has been based on the dominant gasification theory which was that sufficiently high temperatures for the complete reduction of carbon and tars could be obtained only by forcing the air and fuel through such a narrower throat. (Some gasifier designs based on an alternative theory will be reviewed below.) Since most manufacturers do not disclose much information on the internal features of gasifiers, this analysis of throat designs is based on well documented systems from World War II plus some recent units built by research institutions.

Since the throat is just below the hottest part of the gasifier, it must be designed to resist temperatures from 1300° to 1400°C. The throat components have been made of cast iron, steel plate, and ceramic materials.

A cast iron hearth shaped like an hourglass was widely used in World War II gasifiers. These hearths were subject to thermal stress, cracks, and deformation due to uneven mixing of the components in the casting and the poor heat conductivity of the hearths. The cast iron hearths were gradually replaced in Sweden with hearths made of steel plate with 6% chrome and later by cast steel hearths with 6% chrome. Several recent gasifiers have cast iron hearths. The corn cob gasifiers built in Tanzania have a removable cast iron throat ring which fits into a cast iron bottom plate. A cast iron throat was used for six months at the University of the Philippines and was expected to last for five years.

Steel plate has been used for the choke plates in several gasifiers including the Biomass Corporation design shown on page 6. A removable flat steel choke plate

proved easier to construct than a cast iron throat at the Prince of Songkla University in Thailand (see p. 11).

Perforated conical throats made of expanded metal sheet have been used in a "double-fire" rice husk gasifier which is being tested at the University of the Philippines (see p. 7 of this Report and p. 17 of the December 1983 BSR). The holes in the detachable throat allow tars and gas to pass through to a secondary combustion area with its own air supply below the throat. The design reduces tars in the producer gas and provides a more complete combustion of the rice husks before they leave the conical throat. The life of the mild steel thoats is short, but stainless steel throats may provide considerably greater durability.

Ceramic hearths or throats have been used in some models. Energy Equipment Engineering in The Netherlands indicates that tar production is reduced when insulated ceramic throats are used. Jyoti Solar Energy Institute tried a ceramic throat made of refractory cement in an initial wood gasifier prototype, but the cement began to crack after 100 hours of operation.

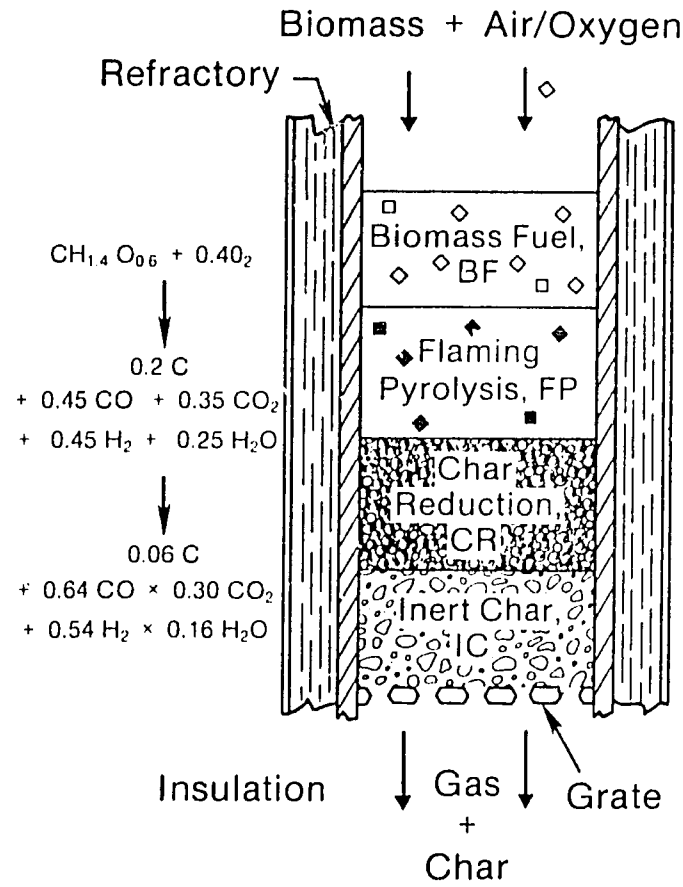

The widely-held belief that a narrower throat is essential in a wood gasifier has been shaken by recent gasification experiments at the Solar Energy Research Institute (SERI) in Colorado. The SERI researchers have tested several versions of a "stratified" downdraft gasifier which is essentially a cylindrical tube with a grate at the bottom; there is no throat constriction and no tuyeres. The combustion air enters with the fuel at the top of the cylinder, as indicated in the sketch above. Initial fuel conversion occurs in a "flaming pyrolysis" zone below a layer of unburned fuel. As the oxygen is consumed and the mixture moves downward into the char reduction zone, some of the steam and carbon dioxide released in the initial pyrolysis react with the char to form more carbon monoxide and hydrogen.

The size of conventional downdraft gasifiers is restricted by the limitation on the diameter of the fuel bed which can be effectively penetrated by air from the tuyeres, but the SERI researchers believe the stratified gasifier could be scaled up to any reasonable size. The full development of this gasifier concept will require further examination of issues related to the prevention of bridging and channeling, grate operation, and the removal of char and ash. A gasifier which utilizes the SERI concepts is now marketed for heat applications by the Buck Rogers Company of Industrial Airport, Kansas; this model has not yet been used to provide gas for engines.

The rice hull gasifier developed in China is similar to the SERI design in that it has no throat constriction and the air enters with the hulls at the top of the unit. (See descripton and sketch on pp. 18-19 of the December 1983 BSR.) An open top rice hull gasifier without throat or tuyeres has also been developed at the Twente University in The Netherlands. Experiments with corn cob gasification in Iowa included the use of

10" (25 cm) and 16" (40 cm) diameter steel pipes as gasifiers; although the units had no throats, turbocharged air was introduced through two sets of tuyeres near the grate.

The Duvant firm in France has developed a large wood gas system with another type of throatless gasifier; the system includes the recycling of some of the pyrolysis gas. Most of the gas is drawn off at the bottom as in other downdraft units; however, some of the gas is drawn off at the top of the drying zone (A in the adjacent sketch) and is mixed with compressed air in a separate chamber (D) before returning to the gasification zone (C). Duvant states the gasifier produces a gas with a low percentage of tars. Four of these gasifiers are being installed with 500 kW generating sets at a "dendrothermal" power station in the Philippines.

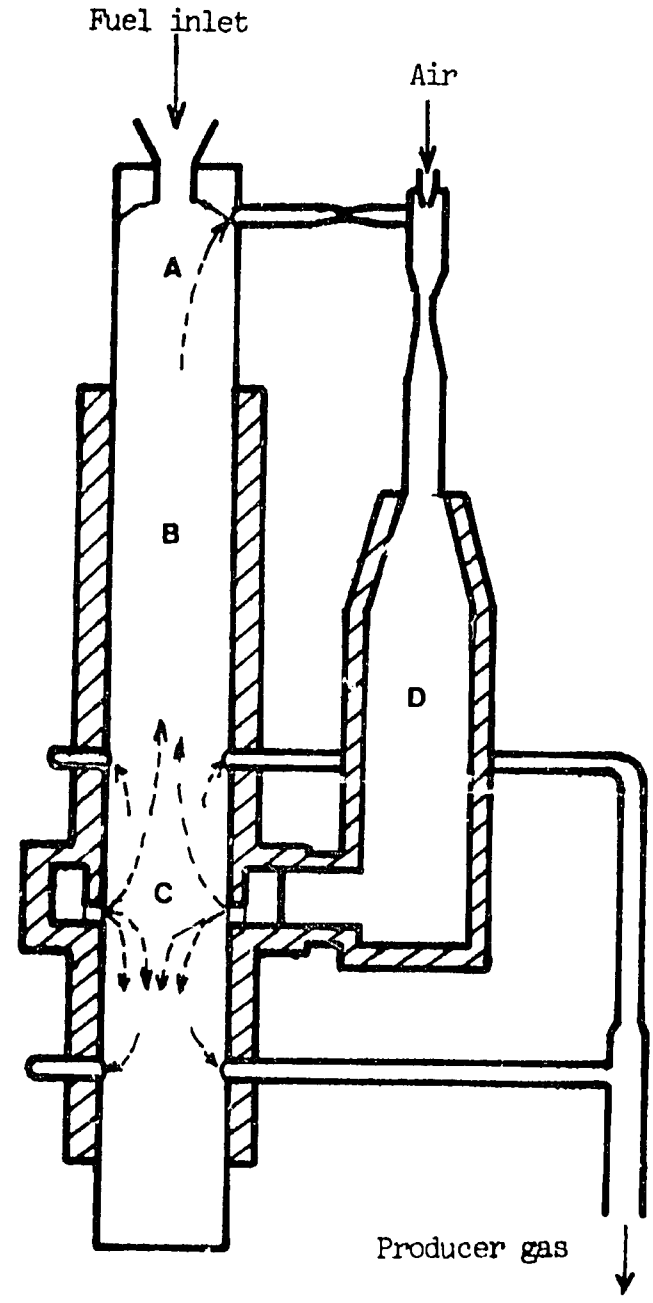

4. Ash Removal

The ashes remaining after the fuel has been gasified must be removed from the reduction zone or hearth of the gasifier to prevent blockage of the flow of gas and fuel. Several types of grates have been used to retain the fuel which has not yet been completely gasified by allowing the ashes to fall through to a container below. Some movement of the grate is normally necessary to accelerate the downward flow of the ashes. In vehicular gasifiers the necessary movement is provided by the normal vibration of the vehicle. Some of the smaller stationary gasifiers have been mounted on a common frame with the system's engine so that engine vibrations would aid the downward flow of fuel, ashes, and gas. Two of the types of woodgas generators which were widely used in Sweden during World War II used a shaker grate operated manually with a lever. Several of the larger wood gasification systems use a rotating grate powered by an electric motor; most of these are eccentric grates, i.e., the segments of the grate are not evenly distributed around the drive shaft so that rotation produces downward motion within the ash bed.

Ash removal is a serious problem in the gasification of rice husks, since the husks contain about 20% ash. An initial rice husk gasification system tested at the University of the Philippines used a rotating eccentric grate with a rotating scraper arm. However, a simpler and even more effective fixed grate ash removal unit was used in later rice husk gasification units in the Philippines. It uses a grate consisting of 1.25 cm square steel bars with 8 mm spacings between them; the ashes are swept through by a rotating scraper.

In almost all of the charcoal systems and smaller wood gas systems, the ashes are removed from the area below the grate manually through a small door at the bottom of the gasifier. Due to the problems in some units with the leakage of gas around

these doors, the doors were eliminated in two gasifier designs in Tanzania and India. However, severe ash removal problems were encountered with both models.

Since the producer gas must flow out through the ash container in most gasifiers, the frequent removal of ashes is essential to prevent a large drop in pressure in the system. The Gasifier and Equipment Manufacturing Corporation (GEMCOR) in the Philippines recommends ash removal after each five refuelings of its vehicluar gasifiers, but weekly ash removal is sufficient for its larger stationary gasifiers. Although the Imbert Company suggested weeky removal of ashes from the 65 kW system at Snowshoe Industries in Canada, more frequent ash removals were necessary if the unit was run continuously.

Some of the larger systems have automatic equipment for removing ashes from the ash pit below the grate. The large gasifier tested in Alaska had an ash removal system with an auger; it operated satisfactorily after the diameter of the connector pipe was matched to that of the auger. About nine pounds of char and ash per hour were removed from the gasifier when it was burning about 200 pounds of wood chips per hour. A similar ash auger is used with the 500 kW Duvant gasifiers being installed in the Philippines.

5. Outflow of Producer Gas

The design features related to the outflow of producer gas of World War II gasifiers were influenced by the cold winter climate in northern Europe. If the upper part of the gasifier consisted of a single wall exposed to the cold ambient air, heat losses were substantial and moisture driven off from previously-added fuel condensed on the sides of the gasifier and dampened newly-added fuel. In most wood gasifiers used in Sweden in the 1940's the entire gasifier was surrounded by an outer shell; the gas flowed up through the space between the gasifier and the outer shell and exited near the top of the unit. This basic design has been used in gasifiers built by the Biomass Corporation in California (see sketch on page 6) and by the Imbert Company in Germany. In this type of gasifier condensation is avoided by insulating the inner chamber with a blanket of hot gases passing through the outer shell.

In another type of wood gasifier the gas leaves the unit at the bottom; moisture accumulating in the upper section of the gasifier is trapped in a condensation jacket around the top half of the unit. It seeps through perforations in the inner wall, condenses on the colder outer wall, and runs down into a trap or gutter which is drained periodically. Such condensation jackets have been included in several recent wood gasifiers including the model shown below which was built at the Prince of Songkla University in Thailand. Research at the University of California at Davis indicated that these condensation jackets were unnecessary if the moisture content of the fuel was below 12%.

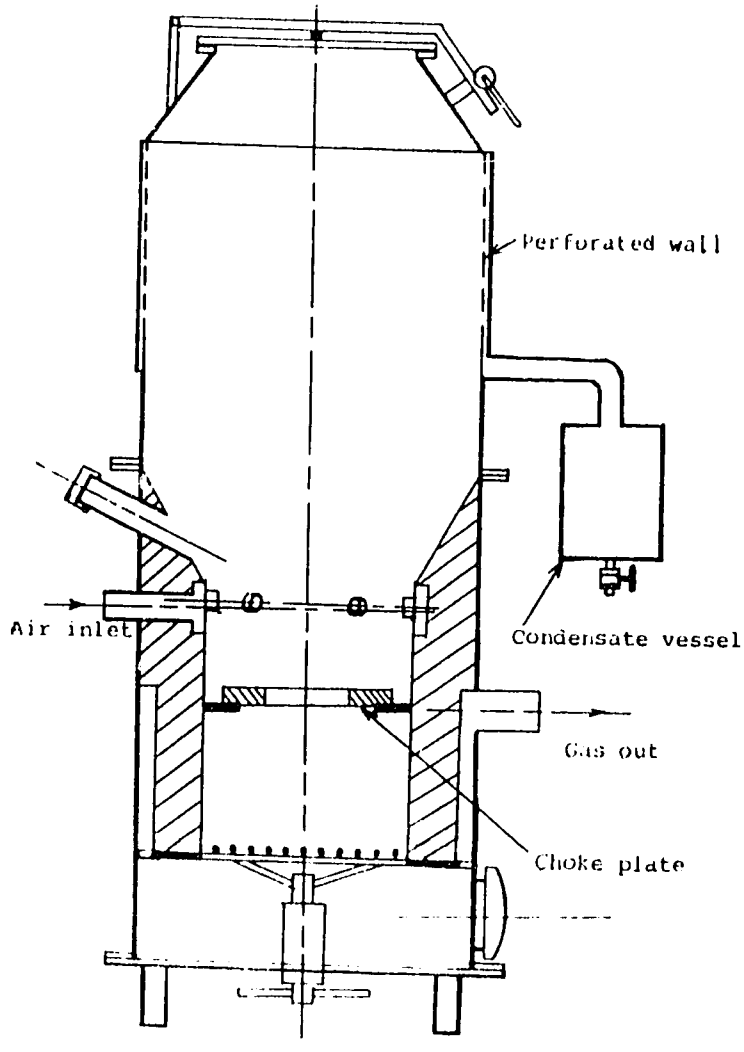

PART THREE: GAS CLEANING AND COOLING

As it comes out of the gasifier, raw or untreated producer gas contains several types of solid and liquid contaminants. The solids consist of carbon and ash particles in a rather wide range of sizes. The liquids consist of a number of hydrocarbons plus moisture; these "tar liquids" initially form a fine mist, but larger droplets may form as they cool. The liquids can cause sticking of moving parts in an engine; the solids can be very abrasive and can cause severe engine damage. The raw producer gas cannot be used in an engine until it has passed through a gas conditioning train which reduces the gas temperature and removes these solid and liquid contaminants.

A number of different types of devices have been used for the cooling and/or cleaning of producer gas. At present a typical gas conditioning train consists of three units: (a) Large particulates are usually removed by a cyclone, although a wet scrubber is sometimes used for particulate removal without a cyclone. (b) Either an air cooler-condenser or a wet scrubber is used to cool the gas and condense out tars and moisture. (c) Remaining contaminants are usually removed by a dry filter. However, there are a number of variations in the design, function, and location in the gas conditioning train of each type of conditioning equipment.

1. Equipment for Particulate Removal

A cyclonic particulate separator, generally knows as a cyclone, is the most widely used device for the removal of larger particulates. Cyclones were used with most of the vehicular gasifiers during World War II; a cyclone is the first piece of equipment in the gas cleaning train in most gasifier systems built in recent years. Since the efficiency of the cyclone is highly dependent on the intake velocity of the gas, the cyclone is almost always located at the point where the gas leaves the gasifier. The gas enters at the top of the cylindrical section of the cyclone at a high velocity. Centrifugal forces drive the larger particles in the gas to the outer wall and they fall to a bin at the narrower bottom, while the gas escapes from the top through a small-diameter pipe. In most systems the accumulated particulates are removed manually from the trap at the bottom of the cyclone. GEMCOR recommends daily cleaning of cyclones using water or pressurized air.

Several systems have used a wet scrubber to collect particulates rather than a cyclone. In the Svedlund wood gasifier system in Sweden during World War II the gas flowed directly from the gasifier to a precipitating tank where it bubbled through water before moving on to the cooler-condenser and filter. A wet scrubber is used without a cyclone in a 65 kg/hour system built by Energy Equipment Engineering in The Netherlands, but a 300 kg/hour EEE system uses a cyclone after the gas passes through a heat exchanger to heat combustion air for the gasifier. The rice hull gasifiers built in China rely on an "ash-flushing tube" followed by two "filter-cooler" towers; both types of cleaning units contain water sprays and are essentially wet scrubbers.

A few systems have used a baffle-type particulate separator. In an Imbert system tested by the Saskatchewan Power Corporation in Canada the gas flowed through three such separators in which various partitions and baffles encouraged the deposit of the particulates. The BECE system in Sri Lanka has a baffle-type impingement separator which follows the cyclone.

There have been serious gas quality problems with the few systems lacking an effective device for particulate removal. No cyclone was used initially with a gasifier for charcoal fines tested by the Tropical Development and Research Institute in England; the gas flowed directly to a condenser-cooler and then to a wet scrubber and dry filter. However, the gas was not adequately filtered and it fouled the inlet and exhaust ports of the engine; there was loss in compression and reduction of power, and engine cleaning was necessary at 200

hour intervals. After modification of the cleaning system which included replacing the wet scrubber with a cyclone and a hot gas filter, the engine ran for over 400 hours without cleaning. Only a cooler-condenser and a dry filter containing wood wool or coconut coir were used with an early Imbert gasifier in tests of the gasification of coconut husks in the Seychelles; substantial quantities of carbon and grit passed through to the engine and operations were suspended until the cleaning system could be upgraded. The large gasifier systems built by Duvant of France in the Philippines include a wet scrubber and two gas filters in parallel, but no cyclone.

A unique type of cyclone was used in Sweden in the 1940's in the Kalle system for the gasification of charcoal fines. Some of the carbon dioxide from the engine exhaust was piped back to the bottom of a specially-designed cyclone; larger charcoal particles were carried to the top of the central air intake pipe in the gasifier and mixed with the combustion air. Fuel economy was very good in the widely-used Kalle units, although high quality charcoal was essential. Tractors were operated with the Kalle system for several thousand hours without engine fouling problems.

2. Gas Cooling Equipment

The temperature of the gas as it leaves the gasifier depends on several variables including the moisture content of the fuel, the design of the gasifier, and the air flow rates. Most of the gas exit temperatures have been between 250 and 400°C. At such temperatures the density of the gas (and thus the energy content per cubic meter) are very low.

Before the gas can be used in an engine, it must be cooled to near the ambient temperature to increase its energy density. In addition to this gas cooling function, the cooling equipment also condenses out tar liquids which must be removed from the gas before it is used in the engine. In the great majority of systems these functions - gas temperature reduction and condensate removal - are performed by either an air cooler-condenser or a wet scrubber.

a. Cooler-condensers

An air cooler has been used with all vehicular and portable systems and some stationary systems, while wet scrubbers are included in a number of the stationary units. The minimum air cooler-condenser consists of a loop or coil of pipe exposed to the air. Some units have a series of blades or fins attached to the pipe to maximize the cooling surface. In vehicular systems the cooler-condenser has usually been located at the front or top of the vehicle to obtain the maximum cooling from the passing air. On gasifier-powered fishing boats in the Philippines the coil runs along the side of the boat just above the water and is cooled by waves and spray. A few units have used a fan to flow air though the cooling coil as in an automobile radiator.

If the coil were only required to cool the gas, it could be located at any point in the gas cleaning train. Since it must also condense out the tar liquids, it must follow the cyclone and/or any other unit designed to trap particulates. Otherwise the particulates are trapped with the tars and block the cooling coil. Even with a cyclone, there can be problems with particulates in coolers. Dust from a charcoal gasifier tested at the Prince of Songkla University in Thailand mixed with condensate to form a sludge in the cooler; the sludge was drained through valves at the bottom of the cooler. Particulates mixed with heavy tar condensate to block the cooler-condenser tubes in tests of a Biomass Corporaton system by the California Energy Commission; the problem was reduced by replacing the tubes with larger diameter pipes and by adding a wet scrubber.

In a few cases these blockage problems have been avoided by using a hot gas filter between the cyclone and the cooler; a filtering material must be used which can withstand high temperatures and the unit should be insulated to avoid condensation of tars and moisture before the gas reaches the cooler. The gasification system at Giriulla Mills in Sri Lanka, built by Biomass Energy Consultants & Engineers (BECE) of The Netherlands, includes a cyclone, an impingement separator, and a fiberglass

filter to remove particulates; a cooler-condenser is the last unit in the gas cleaning train.

Even if particulates have been effectively removed before the gas reaches the cooler, there can be blockages in the coils due to the condensation of large quantities of tar liquids. Although some sketches of gas cleaning trains show no device for draining condensates from the cooling coil, a condensate tap and drain cock have been included on most of the coils. In systems using charcoal, from which most of the tars have already been removed in the carbonization process, the condensate is primarily water which has been reabsorbed by the hydroscopic charocal after leaving the charcoal kiln. GEMCOR recommends daily draining of condensate from its units in the Philippines. The condensate is removed at five-hour intervals from the BECE coconut shell gasifier in Sri Lanka. A quick-release cleaning cover permits easy access to each of the four cooler-condenser tubes in a small gasifier system built by Specialists Engines Ltd. in England; the tubes are suspended at a 45° angle so that the condensate will drain down to the cleaning ports.

Although most cooler-condensers are air cooled, water can also be used as the cooling medium. Some gasifier systems have included a wet cooler in which the cooling coil passes through a jacket of water. (This type of cooler should not be confused with a wet scrubber, described below, in which the gas passes directly through water in a packed bed or spray.) In the Iowa corn cob gasification experiments the cooler for the larger gasifier consisted of a 12' (3.6 m) vertical pipe, the lower half of which was surrounded by a larger-diameter pipe filled with cooling water. The Iowa researchers felt that such cooling towers were clearly preferable to air cooler-condensers.

A wet cooler was included in a microgasifier design developed at Harvard University for use with small irrigation pumps; irrigation water pumped by the unit would flow through the cooler en route to the fields.

b. Wet scrubbers

In a wet scrubber the gas is both cooled and cleaned by passing it through water. There are several types of wet scrubbers and several variations on each type; the most commonly used types are packed bed scrubbers and cascading spray scrubbers. In general, wet scrubbers seem to be the least undertood and least evaluated category of gas conditioning equipment.

In the packed bed scrubber the water flows down through some type of packing material; the water absorbs contaminants and cools the gas as it rises up through the scrubber. Materials which have been used as packing materials include steel wool, metal turnings, wood wool, wood chips, wood blocks, sawdust, charcoal, cork, coke, gravel, crushed rocks, sand, and porcelain marbles.

Although packed bed scrubbers were rather widely used with gasifier-driven boats and stationary engines in Europe in the 1940's, only a few have been used with recent gasifier systems. The Jyoti Solar Energy Institute in India used a packed scrubber filled with coke to clean gas from a 3.7 kW gasifier, but switched to a cascading wet scrubber for a larger 8.3 kW system. After an unsuccessful experiment with a packed scrubber filled with diesel oil, a packed scrubber with water was used in the tests for the California Energy Commission; although a fan-cooled radiator was used to cool the water, the unit was not efficient enough to cool the gas below 38°C. The rice hull gasification system developed in China uses a hybrid scrubbing system which begins with two "filter-cooler" towers containing water sprays and two layers of plastic pingpong balls; these balls have been replaced by small cucumbers in a Chinese-built rice hull gasifier in Mali. In the Chinese systems these filter-coolers are followed by cascading wet scrubbers. Missouri Gasification Systems uses a chemical detergent (trisodium phosphate) in a scrubber with a packed bed of marbles; the detergent breaks up the tars, and the particulates settle to the bottom of the water tank. The addition of some diesel oil to the solution avoids excess foaming.

In the cascading type of wet scrubber the gas enters from the bottom of the unit and passes up through a spray of water which is moving down from the top of the scrubber. The spray is created by nozzles or by a series of slanted and overlapping baffles which create a series of small waterfalls within the scrubber. A gas cleaning assembly consisting of a cyclone, a baffle-type wet scrubber, and an oil bath filter was developed by the University of the Philippines and has been widely used with larger stationary gasifier systems built by GEMCOR in the Philippines. The gas cleaning unit, shown in the adjacent sketch, is primarily utilized in systems for irrigation pumping. Wet scrubbers are appropriate for stationary water-pumping systems, since some of the water pumped by the gasifier-powered pump can be used for the scrubber. Jyoti Solar Energy Institute in India also used a cascading wet scrubber in a 8.3 kW system which pumps 3263 liters of water per minute from a 4.3 m head.

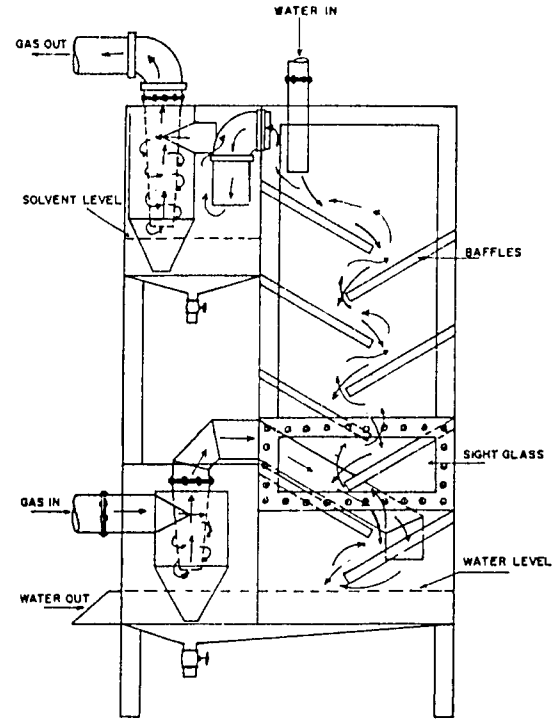

The water is filtered and recirculated in a few of the scrubbers, but most units use the water on a once-through basis. Recirculation of the water in a packed bed scrubber proved impractical in early tests at the University of the Philippines; the scrubber became filled with tarry material which repeatedly clogged the spray nozzles. There are no indications of the recirculation of water in the cascading wet scrubbers which have subsequently been widely used in the Philippines. A diagram of the 120 kW Imbert system at Snowshoe Industries in Canada shows water recirculation but no filtering or cooling of the water; however, current literature on Imbert's largest systems indicates that scrubber water is not recirculated. In the large Duvant systems being installed in several power plants in the Philippines the water descends from the scrubber to a vat, is pumped through water filters, and is then returned to the vat. Water from the vat is pumped out to a cooling tower and then returned to the scrubber.

After an unsatisfactory experience with a packed bed scrubber filled with lava rock, the Alaska gasification unit was modified to include two Venturi-type wet scrubbers. In this type of wet scrubber high gas velocities are used to atomize liquid into droplets and accelerate their collection; the liquids are removed by centrifugal action in the same manner that dry particulates are removed by a cyclone. In the Alaska tests a larger Venturi scrubber was followed by a smaller Venturi. In both scrubbers the moisture fell into a surge pot; tars and oils floating on the water overflowed into a condensate tank, while the water was pumped through a cooling coil and then recirculated to the scrubber. The condensate was filtered through wood char and sawdust and evaporated in a heat exchanger with heat from the engine exhaust. A study of the environmental effects of the Alaska gasification system recommended several options for recycling these tars and oils back to the gasifier. There has been very little other effort to examine the contribution of these wet scrubbers to water pollution or to find alternative means of disposing of the captured tars; further study of the environmental effects of gasifier systems is urgently needed.

3. Oil Bath Filters

In several systems the producer gas is cleaned by flowing it through or across a

container of oil. Gas was bubbled through an oil bath in all of the operations of the 10" (25.4 cm) gasifier during the corn cob gasification experiments in Iowa. Tar and ash particles settled to the bottom of the oil tank and were removed as sludge with a small scoop and replaced with additional make-up oil. The Iowa researchers were pleased with the effectiveness of the oil bath, which required very little maintenance. Although they were originally concerned about the problem of disposing of contaminated oil, they concluded that this problem was no more difficult than that of disposing of waste lubricating oil.

A gasifier system at a sawmill in Thailand uses an oil bath containing 200 gm of lubricating oil at the end of a gas cleaning train which also includes a cyclone, air cooler, and wet scrubber. The oil bath is considered effective in removing tars and fine impurities remaining in the gas. Missouri Gasification Systems found lubricating oil unsuitable for oil bath filters, but uses high temperature oil (including recycled peanut oil).

A filter using diesel oil is the last element in the gas cleaning system developed in the Philippines which is shown on the previous page. In the initial version the gas was bubbled through the oil, but the oil filter produced a considerable drop in pressure in the system. Later the oil level was lowered; the gas merely sweeps over the surface of the oil. Particles of oil are removed from the gas by another cyclone before it leaves the gas cleaning assembly. It was not necessary to replace the diesel oil during six months of initial tests of this modified unit; however, daily checking of the oil level is recommended.

In California the Biomass Corporation attempted to use diesel oil as the circulating medium in a packed bed scrubber rather than water, since it would be easier to burn the oil later than to dispose of the tar-laden water. However, the oil, tar, and condensate formed a dirty emulsion which clogged the spray nozzles. The packing medium was char residue from the gasifier.

4. Dry Filters

Most gas cleaning trains include a cannister containing some type of dry filtering material. A dry filter is usually installed at the end of the gas cleaning train, after most of the particulates have been removed by a cyclone or other dust separator and most of the moisture and tars have been removed by a cooler (either air cooler-condenser or wet scrubber). The function of the dry filter is to pick up the particulates, tars, and moisture which still remain in the gas after these earlier cleaning steps. The effectiveness of a dry filter is influenced by the amount of the condensibles and particulates, the size of the particulates, and the gas temperature.

During the 1940's dry filters of fabric (cloth) proved very effective for filtering the relatively moisture-free and tar-free gas from charcoal gasifiers. The fabric filter was used after a cyclone, which removed the large particulates and any glowing sparks which might damage the fabric; the fabric filter was efficient in removing particles which are too small (less than 5 microns) to be trapped by a cyclone. However, it was essential that the gas temperature be neither hot enough to damage the fabric nor low enough to permit condensation of the moisture in the gas. The Tropical Development and Research Institute in England used a fabric filter successfully with a charcoal gasifier. It proved necessary to remove the filter after each day of operation; if the fabric remained in the cannister overnight it accumulated moisture and caused a substantial pressure drop in subsequent operation of the system. Replacement of the filter cloth was necessary at intervals in excess of 100 hours when the pressure drop began to reduce the power output to the engine. The condensation problem tends to be more serious with wood gas; condensation reduced the effectiveness of cloth filters used in a wood gas system at the Prince of Songkla University in Thailand.

Fiberglass and ceramic fibers, which can withstand high gas temperatures, have largely displaced fabric in dry filters in this era. The BECE system in Giriulla Mills in

Sri Lanka uses fiberglass in a hot gas filter which follows a cyclone and a baffle-type impingement separator but precedes the cooler; the separator and filter are insulated to prevent condensation. Nonetheless, there was tar accumulation in the filter during system startup and the engine malfunctioned after 1,000 hours of operation due to char and tar deposits. The gasifier was fueled with coconut shells which have a high percentage of lignin and produce more tar than wood.

A cork filter proved to be less subject to condensation problems than a fabric filter in tests at the Prince of Songkla University in Thailand. A filter of cork granules was used at the top of a wet scrubber in tests of a modern Imbert system by the Saskatchewan Power Corporation in Canada; the cork filter was washed in soapy water at the same interval as changes of the engine's lubricating oil.

Coconut residues have been used as the filtering medium in several dry filters. Experiments at the University of Peradeniya in Sri Lanka indicated that, if it is preceded by a cyclone, a filter packed with coconut coir fiber was effective for cleaning gases from a coir dust gasifier. Such a filter, used with a cooler but without a cyclone, proved insufficient for the cleaning of gas from coconut husks in the Seychelles; great quantities of carbon and grit passed through the filter to the engine and tests were discontinued until the coir filter could be replaced with a fiberglass filter.

"Coirflex," a rubberized fiber from coconut husks, was used in a dry filter in the initial version of the gas cleaning assembly developed in the Philippines which is shown on page 15; however, tars accumulated in the engine, requiring dismantling at 50-hour intervals. Subsequently the dry filter was replaced by an oil bath filer. Coirflex fiber is still used for the primary filters for the GEMCOR mobile and portable gasifiers in the Philippines, with which a wet scrubber is not feasible. The filters are cleaned weeky by soaking the filter element in soap and water and then drying it before reuse. The cleaning train for these smaller gasifiers also includes a cyclone and a cooler.

Wood residues (sawdust, wood wool, and shavings) have been used occasionally, with mixed results. A filter of wood wool was insufficient in the system without a cyclone in the Seychelles mentioned above. Trays of sawdust and a vertical column of coir dust were tested with a wood gasifier at the University of the Philippines, along with a packed bed wet scrubber with water recirculation which did not perform satisfactorily; this gas cleaning train was replaced with a new system which did not include a dry filter. Twente University tested a dry filter containing layers of wood shavings with a corn cob gasification system in Tanzania; although the filter performed satisfactorily in initial tests, it was subsequently replaced by a fiberglass filter. Missouri Gasification Systems uses a tray of cottonwood shavings as a dry filter following the oil bath in its sawdust gasification system; when dirty, the shavings are dumped into the gasifier's fuel hopper.

In India wood gas from the Jyoti Solar Energy Institute's 8.3 kW gasifier-powered water-pumping system is filtered through two columns of cotton wastes; the filter follows a cascading wet scrubber. Although the cotton was black with soot after 325 hours of operation, there had not been an excessive pressure drop. However, to ensure clean gas during subsequent field tests, a fiberglass safety filter was added. It picks up 1.0 to 1.5 grams of tar and soot during each 35 to 50 hour period.

Char produced by the gasifier was used in a dry filter in tests of a Biomass Corporation gasifier. Serious gas cleaning problems were encountered, but they were attributed to problems with the cooler-condenser and the packed bed scrubber. An expanded gas cleaning train for rice hull gasification tested at the University of the Philippines included two filters packed with rice husk char and a final filter of rice husks. Rice husks have proved to be a good material for dry filters in other systems in the Philippines. A husk filter placed before a wet scrubber minimizes water pollution; tar captured in the husks is disposed of by feeding the husks back into the gasifier.

PART FOUR: ENERGY CONTENT OF PRODUCER GAS

There are two ways of looking at the quality of the producer gas generated by a gasifier. One is to consider the level of contaminants (particulates, tar liquids, and other moisture); this aspect of gas quality has been reviewed in the previous section of this report. The other aspect of gas quality relates to the energy content of the gas.

Producer gas does not have a fixed composition and energy content. Any sample of producer gas is a complex mixture of energy-rich and inert gases; the percentage of each gas in the mixture (and thus the total energy content of the mixture) varies considerably from gasifier to gasifier and from one period of operation of a given gasifier to another. From 15% to 28% of the producer gas is carbon monoxide (CO) which has a caloric value of 321 BTU/ft^3 or 12.6 MJ/m^3; it usually provides nearly half of the energy in the producer gas. Hydrogen (H_2) has a slightly higher caloric value (325 BTU/ft^3 or 12.9 MJ/m^3) but represents only from 5% to 20% of the mixture and contributes from 15% to 20% of the total energy.

Usually only two or three percent of the producer gas is methane (CH_4); however, since it has a very high caloric value (1012 BTU/ft^3 or 39.8 MJ/m^3), it can provide about one-fourth of the energy in the producer gas mixture. A high percentage of methane is considered a mixed blessing in a gas to be used in an engine since it is usually accompanied by a high percentage of undesirable tar liquids in the gas. These hydrocarbons add more energy but must be removed, as far as possible, before the gas is used in an engine. The total energy content of the producer gas depends on the percentages of each of these energy-rich gases; together, they usually make up about half of the total mixture. The other half is made up of inert gases, principally nitrogen and carbon dioxide.

Several factors can influence the composition of producer gas and thus the energy content of the gas:

1. The Use of Charcoal as Fuel

Although there are a number of advantages to charcoal as a gasifier fuel (see pp. 4 and 24), producer gas from charcoal contains less energy than gas made from wood or other uncarbonized biomass. Most of the moisture and hydrocarbons in the wood are driven off in the charcoal kiln. The lower energy content of gas from charcoal is due to the much lower percentages of hydrogen, methane, and other hydrocarbons in the gas. The hydrogen percentage in charcoal gas is usually below 10%, compared to 14% to 20% in gas from wood and other biomass. The charcoal gas also contains very little methane. The percentage of carbon monoxide is actually higher in charcoal gas (25% to 30% as compared to 17% to 25% in wood gas), but this does not make up for the reduced hydrogen and methane.

The Tropical Development and Research Institute in England found that the energy content of producer gas from charcoal fines was only 3.55 MJ/m^3. The recent review of biomass gasification by the Earthscan group in London gives 4.1 MJ/m^3 as the average energy content for charcoal gas. Two charcoal gasifiers at the University of the Philippines produced gas with energy contents of 4.44 and 5.09 MJ/m^3. In contrast, two publications list 5.5 MJ/m^3 as the average energy content of wood gas and much higher energy levels have been recorded for wood gas samples containing a high percentage of tars. The initial difference in energy content between wood gas and charcoal gas is somewhat reduced through the removal of most tars from the wood gas in an effective gas cleaning train.

2. High Fuel Moisture

The moisture content of the fuel is the fuel characteristic which most affects the energy content of the producer gas. A high moisture level reduces the temperature in the gasifier which in turn reduces the production of carbon monoxide. The CO is formed through the combination of carbon with water or carbon dioxide or by the combination of carbon dioxide with

hydrogen. The chemical reactions are as follows:

$$C + CO_2 = 2\ CO$$

$$C + H_2O = CO + H_2$$

$$CO_2 + H_2 = CO + H_2O$$

Each of these is an endothermic reaction requiring heat. However, the heat needed for these reactions can be absorbed in the conversion of moisture in the fuel. If the fuel contains too much moisture, too much of the heat of combustion is absorbed in the initial conversion of the water to steam and in the subsequent conversion of the steam to carbon dioxide and hydrogen when it contacts the hot biomass.

In the Alaska tests the gasifier temperatures were inversely proportional to the moisture content of the fuel; the drier the fuel, the higher the temperatures. There is, however, a relationship between gasifier temperatures and the production of carbon monoxide. When the tuyere temperature in the Marenco gasifier in Alaska was only 621°C, the CO fraction in the gas was only 18.4%; when the temperature increased to 882°C, the percentage of CO increased to 23.2%.

Using a Biomass Corporation gasifier, the Forintek Canada Corporation produced gas with 25% CO from dry fuel but there was only 17% CO in the gas when wet fuel was used. Another test in Canada showed a drop in CO from 25% to only 11% with very wet fuel. Less dramatic reductions in the CO percentages have been noted when wet fuel was used in several other tests. In addition to slowing the conversion of carbon to carbon monoxide, the moisture in the fuel leads to the further oxidation of the carbon into carbon dioxide; as oxygen is released from the breakdown of the water, it unites with the CO to form CO_2 which has no energy value in the producer gas.

The net percentages of hydrogen in the producer gas are not very substantially affected by the increased moisture in the fuel. Although the initial reactions are slowed by lower temperatures resulting from the increased moisture, this loss of H_2 is balanced by the additional H_2 released by the breakdown of water in the second reaction listed above.

Due to the lower percentage of carbon monoxide in the gas produced with wet fuel, the energy content of the gas is lower. In tests of a Biomass Corporation gasifier for the California Energy Commission, the energy content of the gas was 7.1 MJ/m^3 when fuel moisture content was 13% but was only 5.0 MJ/m^3 when the moisture content was 23%. In Chinese tests, gas from wood chips with 11% moisture had an energy content of 5.57 MJ/m^3, but the energy rating was only 3.5 MJ/m^3 when the chips had 27% moisture.

3. Load Variations

Variations in the load on a gasifier system clearly influence the composition and energy content of the producer gas. A number of experiments have compared load variations (measured in terms of air flow, fuel consumption, gas production, engine RPM's, and/or power output) with variations in the composition and energy content of the gas. All of the studies showed significant differences in the gas at different loads; however, some of the data indicates better gas at higher loads, while other tests show poorer gas during operation at higher loads.

Three institutions reported higher percentages of CO when small gasifier systems were operated at maximum capacity. As the power output of a small charcoal gasifier system increased at the Prince of Songkla University in Thailand, the CO percentage increased from 19% to 28%. In tests at the University of the Philippines with gas from coconut shell charcoal, the highest percentages of CO (26% to 27%) were produced when the 5 HP engine was operated at the highest RPM levels. The CO percentage in the gas from the Jyoti Solar Energy Institute's 8.3 kW wood gasifier rose from 16 to 22% when the gas flow was increased from 25 to 76 m^3/hour.

In contrast, the CO percentages dropped when two large wood gasification

systems were operated at higher loads. When both air intake and gas output were nearly doubled in tests of an Imbert system in Germany, the CO percentage dropped from 29% to 18%. A substantial drop in CO was noted at the Imbert system at Snowshoe Industries in Canada after each fuel feeding, apparently due to excess air introduced with the fuel. Some of these smaller and larger systems have produced more hydrogen at higher loads, while others have produced less.

These variations in CO and H_2 have resulted in significant variations in the energy content of the gas. As load increased in the Jyoti tests the energy content of the gas rose from 3.9 to 5.0 MJ/m^3. The gas from the Imbert system at Snowshoe Industries in Canada was rated at 4.6 MJ/m^3 when the unit was operated at 15 kW but increased to 5.4 MJ/m^3 when the load increased to 45 kW.

These varying results appear to be due to the varying effects of increased load on the air/fuel ratio in the gasifier. An increased load means an increased flow of air into the gasifier. In some of the small systems the air/fuel ratio may have been below the stoichiometric level when the engine was operating at low speeds; in such cases the air/fuel ratio would be improved by the increased air at higher loads. In some of the larger systems the air/fuel ratio may be too high at higher loads. In solid fuel systems there is no way that an increased flow of air can be precisely matched by an increased flow of fuel. Too much air means less carbon monoxide, more carbon dioxide (which adds no energy to the gas), and a lower total energy content.

The variations in the energy content of the producer gas have a significant impact on the percentage of diesel fuel displacement in dual-fueled diesel engines as well as on the power output of such diesel engines and of spark ignition engines operated with 100% producer gas. This impact will be reviewed in the following sections of this Report on the use of producer gas in spark ignition and diesel engines.

PART FIVE: THE USE OF PRODUCER GAS IN ENGINES

1. Spark Ignition Engines

A spark ignition engine can operate exclusively on producer gas without the addition of gasoline. A mixture of air and producer gas is piped directly into the engine's intake manifold, bypassing the carburetor which is usually left in place to permit occasional use of gasoline in the engine. Various devices have been used to provide a proper air/fuel mixture. The Alaska gasifier experiments included a specially designed air/gas mixing box which was controlled automatically by the engine's governor. The pressure of both the air and the gas entering the mixing box was regulated by commercially-available gas pressure regulators. Most of the smaller and medium-sized gasifier systems have used manually controlled mixing valves to permit adjustments necessary due to fluctuations in gas quality and to load changes.

The optimum (stoichiometric) mixture of air and producer gas depends on the volume of the combustible gases in the mixture. The optimum volumetric air/fuel ratio increases as the volume of these gases increases. Most sources indicate that the stoichiometric ratio ranges from 1.25 to 1.35, although some systems are designed to operate at a somewhat higher ratio. A mixing chamber providing an air/fuel ratio of 1.5 was used for a Biomass Corporation gasifier tested for the California Energy Commission. However, the energy content of the gas exceeded expectations, apparently due to the relative ineffectiveness of the gas cleaning train; higher percentages of hydrocarbons in the gas entering the engine added to the energy content of the gas. Gas analysis indicated a stoichiometric air/fuel ratio of 1.77, and the Commission staff concluded that the engine had not received sufficient air for complete combustion of the gas.

In a number of gasifier/engine systems the engine's ignition timing has been advanced to compenate for the high octane number and low flame speed of the air/gas mixture. For complete combustion, ignition

must occur before the piston reaches Top Dead Center (TDC); the higher the speed of the piston, the earlier the ignition timing needed. In variable speed engines the timing is automatically adjusted by centrifugal regulators to match the speed of the engine. Since the hydrogen in the producer gas has a higher flame speed than carbon monoxide, the extent of the timing advance needed depends in part on the size of the hydrogen fraction in the gas. Studies at the University of Californa at Davis indicated that producer gas from wood containing a high hydrogen percentage (15% to 20%) required only about the same ignition timing as in operation with gasoline. However, the hydrogren fraction in the gas from many wood gasifiers is much lower (10% to 15%) and most charcoal gasifiers produce gas with only 5% to 10% hydrogen.

The Tropical Development and Research Institute in England found that, depending on engine design, timing advances up to 25° may be needed for engines using charcoal gas, but the California studies indicate that a higher advancement may be needed for the optimum use of charcoal gas. A spark timing of 23° provided the best performance in the Caterpillar natural gas engine used in the Alaska wood gasification experiments. Chinese engineers found that an ignition advance of 28° to 32° was needed to avoid knocking and overheating in a six cylinder gasoline engine using producer gas from rice husks. A number of reports on gasifier/engine systems make no reference to adjustments in ignition timing, but the performance and output of these engines may have been restricted by timing problems.

The energy content of a stoichiometric mixture of air and average producer gas is about 2.5 MJ/m^3 or about 70% of that of a stoichiometric mixture of air and gasoline. The power output of gasoline engines when fueled with producer gas is usually less than 70% of the rated power of the engine. At TDRI in England a 20 kW Ford engine produced from 55% to 80% of the rated output, depending on the type of carburetor and the engine speed. A 5 kW Honda engine/generator set produced 60% to 70% of the rated power when operated with producer gas in Indonesia. Researchers in Japan, Thailand, and India have reported only 50% of the rated output when producer gas was used in small gasoline engines.

Several large systems have used spark ignition engines designed for use with natural gas. The energy content of natural gas is 35 to 39 MJ/m^3 or about six times that of producer gas, but natural gas is normally burned with about nine parts of air. The energy content of a stoichiometric mixture of air and natural gas is only slightly higher than that of a stoichiometric mixture of air and gasoline; the power derating of natural gas engines when fueled with producer gas is thus about the same as when producer gas is used in engines designed for gasoline.

The Alaska experiments used a generating set with a Caterpillar natural gas engine which was rated at 170 kW when naturally aspirated (non-turbocharged) with natural gas. The maximum output of the engine-generator set with producer gas was 112 kW or about 65% of the rated output; a typical gas sample showed relatively low concentrations of both CO and H_2. The California Energy Commission sponsored tests of producer gas in a similar 170 kW natural gas engine which had been derated by 30% to 120 kW for use with producer gas. In this case the energy content of the gas was unusually high; however, due to excessive moisture and high temperatures in the gas stream, the maximum continuous output was 90 kW or 53% of the original power rating.

The gas cleaning equipment can contribute to reductions in power output. Resistance to the flow of gas through the gas cleaning train, i.e., due to inadequate cleaning of filters, can cause pressure losses which reduce the flow of air to the gasifier and of gas to the engine. If the gas cooling unit (cooler-condenser or wet scrubber) does not cool the gas to near ambient temperatures, the energy density of the gas will be too low for maximum power output. High gas temperatures were a major reason for the low output of the system tested by the Caliornia Energy Commission.

In some engines power can be increased by increasing the engine's compression ratio, i.e., the ratio between the volume in the cylinder at the point of lowest compression (Bottom Dead Center or BDC) and the volume at the point of highest compression (Top Dead Center or TDC). In the 1940's, when most cars and trucks had compression ratios of 5 to 7, significant increases in power output with producer gas were achieved by increasing the compression ratios through a new cylinder head or new and higher pistons. A recent National Academy of Sciences report cites increases in efficiency of from 4 to 8% due to increases in compresssion ratios from 5:1 to 6:1, 6:1 to 7:1, or 7:1 to 8:1, with the largest power increases from the engines with the lowest initial ratios. A draft gasification manual which is being prepared at the Solar Energy Research Institute in Colorado indicates that, due to the higher octane rating of producer gas compared to gasoline, compression ratios can be increased to between 11:1 and 14:1 in engines using producer gas.

Increasing the compression ratio is not technically feasible in some engines. If it is feasible, the change may make starting the engine more difficult and/or shorten the life of the engine. Gas with a high hydrogen content is not suitable for operating at high compression ratios in spark ignition engines. Once the compression ratio is raised, the engine can no longer be run with gasoline for extended periods.

Another option for increasing power output is to supercharge or turbocharge the engine. This option was frequently used in vehicular gasifier systems in the 1940's. The air/fuel mixture is delivered to the piston at a higher pressure; the effect is equivalent to an increase in the compression ratio. Some degree of supercharging is provided by the suction fans which pull the gas through several gasifier systems. It is also possible to supercharge the entire system. As noted earlier, the Alaska wood gasification system was operated at a positive pressure of 3 to 4 pounds per square inch created by a 10 HP blower. However, this system supercharging increases health hazards due to greater chances of leakage of carbon monoxide from joints and fittings.

The simplest way to offset the power loss through the use of producer gas is to use some gasoline with the gas when needed for starting, acceleration, or extra power. This option is utilized in many vehicles with charcoal gasifiers in Brazil and the Philippines. However, this use of gasoline reduces the economic benefit of the gasifier system and can increase the carbon monoxide level in the engine exhaust. The gasifier cools off to the decreased load; when the engine is switched back to gas, the gas quality can be very poor.

2. Diesel Engines

Although a spark ignition engine can be operated exclusively with poducer gas, a compression ignition (diesel) engine needs some diesel fuel as a pilot fuel to ignite the gas. This use of biogas in diesels is known as "dual-fuel" operation. A stoichiometric mixture of air and producer gas has an energy content of about 2.5 MJ/m^3 which is only about 75% of that of a stoichiometric mixture of air and diesel fuel (3.5 MJ/m^3). However, in dual-fuel operation additional energy is provided by the diesel fuel, and the power loss is less than with the use of biogas in spark ignition engines.

The power output of the dual-fueled engine decreases as the percentage of diesel fuel displacement increases. In tests at the University of the Philippines with a six-cylinder engine operating at about 1600 RPM, power output was 41 HP with diesel fuel only and 39 HP with only 47% of the diesel fuel displaced by producer gas from charcoal. However, output dropped 31% to 28 HP when diesel fuel displacement was increased to 75%. The most severe reductions in power ouput have been reported in those cases in which high percentages of diesel displacement were achieved. The Saskatchewan Power Corporation replaced 91% of the diesel fuel with producer gas in a 12-cylinder Deutz engine; the engine was rated for 200 kW with diesel fuel but produced 27% less power (145 kW) in dual-fuel operation. The

Imbert Company in Germany derated a 6-cylinder Deutz engine by 29% from 92 kW to 65 kW for use with producer gas. The extent of the power drop can be minimized by using more diesel fuel. Output dropped only 8% to 55 kW in an engine rated at 60 kW at the University of California at Davis, but diesel fuel displacement was only 67%. At the University of Florida another 60 kW engine prodced 45 kW or 75% of rated power when dual-fueled; about one-fourth of the ouput was produced with diesel fuel.

Various factors influencing the energy content of the producer gas (including the moisture content of the fuel, the use of charcoal or uncarbonized fuel, and load factors in gasifier operation) were outlined in Part Four. All of these factors also influence the percentage of diesel fuel displacement, which tends to increase as the energy content of the producer gas increases. In the startup of a small gasifier system the Jyoti Solar Energy Institute in India found that the diesel fuel displacement rose steadily from about 15% when the gas contained only 2.0 MJ/m^3 to over 80% when the energy content of the gas reached 4.6 MJ/m^3. Due to the lower energy content of producer gas from charcoal (see p. 18) gasifier systems using charcoal have usually achieved somewhat lower percentages of diesel fuel displacement than systems using wood or other uncarbonized fuel. GEMCOR states that 80% is the maximum diesel fuel displacement for the gasifiers it produces in the Philippines, and displacement rates as low as 50% have been reported in field use of these gasifiers in the Philippines.

If the energy content of the gas remains relatively stable, the percentage of diesel fuel displacement tends to decrease as the engine load increases. In tests of gas from wood in a 12 kW engine coupled to a 7.5 kW generator at the University of the Philippines, diesel fuel displacement was 77% with a 4 kW load but dropped to 63% with a full load of 7.5 kW. In an experiment in which power output was relatively low due to a high hydrogen content in the gas, Kirloskar Oil Engines of India replaced 60% of the diesel oil in a 5 HP engine operating at one-quarter throttle; diesel fuel savings dropped to only 22% when the engine was operated at three-quarters throttle.

Maximizing diesel fuel savings at low loads is feasible only if the engine's intake of diesel fuel is reduced automatically or manually to match the lower loads. During tests of the types of diesel engines with producer gas from corn cobs in Tanzania the diesel injection pumps were set to provide about 20% of the maximum possible amount of diesel oil, regardless of engine load. If the engines had operated at full load, diesel fuel displacement would have been 80%. However, due to the long idling periods at the Tanzanian corn mills where the engines were used, a higher percentage of the energy was provided by the diesel fuel and actual diesel savings were only about 50%.

The energy content of the gas is not the only factor affecting the percentage of diesel fuel displacement. Although the energy content of the gas from a small charcoal system at the University of the Philippines was somewhat lower than in the gas from a larger system, the percentage of diesel fuel displacement was higher in the smaller system. The better performance of the smaller system was thought to be due to the better control over the air/fuel mixture in the single-cylinder engine used in the smaller system compared to that in the multiple-cylinder engine used in the larger system.

Moisture remaining in the gas after gas conditioning adversely affects the operation of the engine. Researchers at the University of California at Davis concluded that the high water content in the gas was the primary reason for the low diesel fuel displacement (67%) in a 60 kW generator set.

Advancing the injection timing of dual-fueled diesel engines is widely recommended in the technical literature for the same reasons hat advances in ignition timing are needed for spark ignition engines (see p. 21). However, the effect of timing changes are limited at lower engine speeds, and there have been few references to timing changes in reports on the operation of small diesel engines with producer gas in developing countries.

PART SIX: THE ECONOMICS OF GASIFIER/ENGINE SYSTEMS

The rather limited available material on the capital and operating costs of gasifier systems generates some confusion due to the lack of sufficiently clear distinctions between (a) gasifier/engine systems and heat gasifier systems, (b) charcoal gasifiers and wood gasifiers, (c) manually fed units and automatically fueled systems, and (d) shaftpower systems and those producing electrical power. Moreover, some of the capital cost data applies only to the cost of the gas production system (mainly the gasifier and the gas cleaning equipment), while other data covers the total system cost including an engine or engine generator and perhaps other equipment including fuel handling equipment, automatic controls, and electrical switchgear.

Charcoal gasifier systems usually cost less per kW than wood gas systems due to several factors; (a) Since most of the tar and moisture has been driven out of the charcoal in the carbonization process, the charcoal gasifier does not need some of the features of a wood gasifier which are designed to cope with tars and moisture. Hearth design and air intake arrangements are much less critical than in a wood gasifier. No charcoal gasifier surveyed in the preparation of this Report had a blower or fan to supplement engine suction, an external air preheater, or a condensation mantle to trap moisture released in the fuel hopper. (b) Most of the charcoal gasifiers are relatively small and manually operated. No charcoal gasifier covered by the survey had an automatic system for fuel feeding, a powered rotating grate, or an automatic ash removal system. (c) Charcoal gasifiers produce a much cleaner gas, and a less complex set of gas cleaning equipment is needed.

These factors have permitted the production of charcoal gasifier systems in Brazil and the Philippines with capital costs as low as $50 to $100 per kW exclusive of the costs of engines or generators. Other factors which have contributed to these low unit costs include low labor costs and strong governmental stimulation of the gasifier market through direct purchases of gasifier systems in the Philippines and through tightening restrictions on the use of conventional fuels in Brazil.

Most of the systems built in Europe and North America have been larger and more complex systems designed for use with wood or other uncarbonized fuels. Many of the systems have automatic equipment for fuel feeding, grate rotation, and/or ash removal. Other factors which have contributed to higher costs of the systems manufactured in developed countries include higher labor costs, the substantial initial research and development costs which have been borne primarily by private firms, the desire of the firms to recover these development costs rather quickly, and the present lack of a large enough market for gasifier systems to permit economies of scale in production and enable firms to spread the development costs over a large number of units.

A recent survey by the Tropical Development and Research Institute (TDRI) in England identified 30 manufacturers of gasifier systems which are suitable for producing electricity; 21 of the firms were in Europe. Only about a third of the firms make systems smaller than 25 kW. TDRI found that the highest costs per kW were for the smallest and largest systems. Indicative prices from European and North American firms for total gasifier power plans including engines and generators were about $2250/kW for a 5 kW system, $1200/kW for a 10 kW system, and $720/kW for a 25 kW system. The lowest costs per kW were for systems in the 50 to 100 kW range which are also manually fed. The survey showed a $510/kW average for 50 kW systems and a $375/kW average for 100 kW systems. These figures apparently do not include equipment for fuel storage or handling, freight, or installation costs.

Since most of the gasifier systems built in developing countries have been low-cost charcoal gasifier systems, there is not yet much information on the capital costs of wood gasifiers built in developing countries. However, Jyoti Ltd. of India is

now offering gasifier systems for water pumping and for electric power generation in the 5 kW to 100 kW range which are designed to use agricultural residues or wood wastes; the capital costs per kW of installed capacity of the Jyoti electric generating systems are about $530 for a 10 kW system, $460 for a 25 kW plant, and $403 for a 100 kW system.

The unit costs for systems substantially larger than 100 kW are higher due to the need for automatic fuel-handling equipment and automatic controls and to the higher cost of the larger engines needed for these systems. Information from several sources indicates that such systems will usually cost in excess of $1,000/kW. Energy Equipment Engineering in The Netherlands indicates that a 125 kW cogeneration plant would cost about $140,000 or about $1100 per kW. This price includes $50,000 for the gasification plant, $70,000 for a cogeneration unit including engine and generator, $10,000 for fuel storage, and $10,000 for installation. A 250 kW wood gasification system being built by Marenco, Inc. of Alaska at an Alaskan lumber mill will cost abour $370,000 or nearly $1500/kW including the wood handling system, gasifier, gas cleaning equipment, a second-hand Caterpillar engine-generator, switchgear, and controls.

The Earthscan group in London made a detailed comparison of the costs of shaftpower from a 50 kW diesel engine using diesel fuel only and using producer gas from three gasifier systems with the following assumed characteristics and costs: (a) a gasifier costing $75/kW of the type used with charcoal in Brazil and the Philippines, (b) a wood gasifier costing $200/kW, which might be a feasible price for simplified wood gasifiers manufactured in considerable numbers in developed countries, and (c) a wood gasifier imported from Europe or North America costing $800/kW. All of these figures include the gas cleaning equipment, but none of them include the cost of the diesel engine. The Earthscan economic analysis used a series of baseline assumptions including diesel fuel costs at 40 cents/liter, wood costs of $20/tonne, and an annual operating period of 2,000 hours.

Using the baseline assumptions and a charcoal cost of $50/tonne, the shaftpower costs were 15.5¢/kWh with the locally built wood gasifier; these power costs were considerably lower than the cost of shaftpower with diesel fuel only which was 21¢/kWh. However, shaftpower costs with the expensive imported gasifier were 26.7¢/kWh. The study indicated that 50 kW gasifier systems costing more than $400/kW would be economically attractive only if operating periods were very long, diesel prices were above 60 cents/liter, or diesel fuel supplies were very reliable. However, small gasifier systems with somewhat higher capital costs per kW may be competitive with comparably sized diesel-only systems. The capital cost of Jyoti's 5 kW pumpset is about $480/kW, but water pumping costs only 7¢ to 11¢ per kWhr depending on the price of biomass fuels; if diesel oil is 34¢/liter, water pumping with a diesel-only system costs 12¢/kWh in India.

Jyoti estimates that the costs of electric power from its 10 kW, 25 kW, and 100 kW gasifier power plants are lower than from comparably sized diesel gensets using only diesel fuel; the extent of the savings depends on several variables including the size of the system, the annual hours of operation, and the cost of the biomass fuel. Using assumptions of diesel fuel at 34¢/liter, biomass fuel at $24/ton, and an annual operating period of 2500 hours, the cost of electric power was 12¢/kWhr with a 10 kW Jyoti system, 11¢/kWhr with a 25 kW system, and 9¢/kWhr with a 100 kW system. The cost of electric power from comparably sized diesel gensets using only diesel fuel was estimated to be 15¢, 13¢, and 13¢ respectively.

The Earthscan study also included an elaborate sensitivity analysis which examined the effect on shaftpower costs of changes in a number of the baseline assumptions. As will be indicated in subsequent paragraphs, the analysis demonstrated that the economic advantages of the charcoal gasifier and the moderate-cost wood gasifier tended to disappear if an unfavorable change was made in any one of several cost factors and operational assumptions.

Estimates of the cost of shaftpower or electric power per kW are greatly affected by the assumptions made concerning the annual operating period and the total working lifetime of the systems. The Earthscan study used baseline assumptions of a 2,000 hour annual operating period (or about 40 hours per week) and a six year lifetime; the capital costs of the the system were thus spread over an assumed total of 12,000 hours of operation. When the annual operating periods of both the conventional diesel sysem and the gasifier systems were reduced to only 500 hours or about 10 hours per week, only the low-cost charcoal system was competitive with the diesel-only system. The economics are more favorable if the gasifier system is operated more or less continuously. The Jyoti analysis showed substantial reductions in electric power costs per kWhr if its gasifier power plants were operated for 7500 hours per year. With biomass fuels at $24/ton, the power costs were 10¢/kWhr with the 10 kW system and only about 9¢/kWhr with the 25 kW and 100 kW systems. With this nearly continuous operation, the cost of power from the gasifier systems would be less than 75% of that from the comparable diesel-only systems.

When the assumed working lifetime of both the diesel and gasifier systems was reduced from six to three years in the Earthscan analysis, only the low-cost charcoal gasifier produced shaftpower at a cost lower than that of the diesel-only system. Although a few earlier systems remained in operation for more than 20 years, it is difficult to predict the lifetime of present systems since most units have operated for only a short period. The TDRI survey noted that, due to the use of lower cost materials such as thin gauge steel and flexible connections for piping, the working lifetime of some of the low-cost systems may be relatively short.

The type of engine or engine-generator used in the system has a major impact on the capital and operating costs of the system and on the cost of power per kW. Diesel engines are usually rather expensive; Earthscan used $300/kW or $15,000 as the baseline assumption as to the cost of a 50 kW diesel engine. The sensitivity analysis showed that, using the $200/kW gasifier, the shaftpower cost would drop from 16.8 to 14.3¢/kWh if the engine cost only $150/kW but would increase to 21.8¢/kWh if the engine cost $600/kW. These high capital costs are offset in some degree by the longer lifetime of the diesel engines compared to gasoline engines.

The initial capital cost of a mass-produced gasoline engine is usually much less than that of a diesel engine of comparable size. Gasifier systems in several countries have included used engines from cars or small trucks which were available locally at prices much below those of diesel engines. This advantage in initial cost is balanced in part by the shorter operating life of gasoline engines compared to diesels. Gasoline engines can operate on 100% producer gas, but the reduction in power output is greater than in dual-fueled diesel engines. The economics of entirely new gasifier/engine systems are obviously different from those when the gasifier system is added to provide gas fuel for an existing engine or engine-generator. If the local price of gasoline is substanially higher than that of diesel fuel, there is an additional economic incentive for the retrofitting of existing gasoline engines with gasifier systems.

In gasifier sysems used for elecricty generation, the total cost of the engine-generator set must be considered. In The Netherlands, Energy Equipment Engineering lists $350/kW as the approximate cost of gensets for hand-loaded gasifier systems. In India Jyoti indicates that a 10 kW diesel engine-generator set costs about $268/kW; a 25 kW set costs $244/kW and the cost of a 100 kW set drops to $211/kW.

The performance of the engine with producer gas also influences the economics of a system, especially one with a dual-fueled diesel engine. The Earthscan study showed that the cost of shaftpower per kW from a dual-fueled engine is significantly affected by the extent to which diesel fuel is displaced and is less dramatically influenced by the extent of

engine derating with producer gas. When the baseline assumption of 80% diesel fuel displacement was changed to only 50% displacement, the cost of shaftpower increased from 14.8 to 18.5¢/kWh with the charcoal gasifier and from 16.8 to 20.6¢/kWh with the moderate-cost wood gasifier. In the latter case the drop in diesel fuel displacement virtually eliminates the economic advantage of the gasifier system. The Earthscan baseline analysis assumed no power loss due to the use of producer gas. When the output assumptions were changed to 15% or 30% derating, the shaftpower cost rose from 14.8 to 15.4 or 16.5¢/kWh in the low-cost system and from 16.8 to 17.7 or 18.9¢/kWh in the medium-cost system.

The prices of liquid fuels have a major impact on the economic analysis. In Thailand, where the gasoline price is much higher than the price of diesel fuel, the economic advantage of replacing a gasoline-powered generating set with a gasifier system was shown to be much greater than the replacement of a diesel-powered generating set. When the Earthscan baseline assumption of diesel fuel prices at 40 cents/liter were increased to 60 cents/liter, the cost of shaftpower using only diesel fuel rose to 29.4¢/kWh but the power cost from the medium-cost gasifier system rose only to 19.2¢/kWh.

Fuel costs of a gasifier system are more substantial when a system is operated with charcoal or with wood which must be harvested or collected for use in the system. In both cases the real costs of the biomass fuel (which may not be fully reflected in the paper or currency costs) include the costs of production, harvesting, collection, and/or transporting the fuel as well as processing and handling.

The previously-described savings in capital costs of a charcoal gasifier system are offset in part by the higher costs of charcoal compared to uncarbonized fuels. Brazil's charcoal, which is primarly used for metallurgical purposes, is produced in an elaborate system which includes huge Eucalyptus plantations and large clusters of beehive charcoal kilns. Although most of the fuel for gasifiers in the Philippines has been produced in earth pits from coconut shells, a Brazilian-type charcoal production system is being planned to support the expanded use of charcoal gasifiers as well as the greater use of charcoal in industries. The Earthscan study indicated that under the baseline conditions there is a substantial economic benefit from the use of a 50 kW charcoal gasifier system if the price of charcoal is $50 or $75 per tonne. If the charcoal price is $100/tonne, the shaftpower cost from a low-cost gasifier is only marginally lower than from a conventional diesel engine and the power cost with a medium-cost system is about equal to that with a conventional diesel unit. As with wood gasifiers, the economics of charcoal gasifiers are much more favorable if diesel prices are higher.

Fuel costs must be carefully considered in those cases where wood is produced, harvested, and/or collected for use in a gasifier system. Both the Earthscan and Jyoti economic analyses support the feasibility of operating gasifiers on relatively expensive wood grown for this purpose on energy plantations. The Earthscan baseline analysis assumed a wood fuel price of $20/tonne. If the wood price assumption is raised to $40/tonne, the price of shaftpower from the inexpensive wood gasifier system increases from 16.8 to 19.6¢/kWhr; the Earthscan group concluded that wood costing up to $45/tonne would be competitve with diesel fuel at 40¢/liter. Similarly, the Jyoti analysis indicated that gasifier system using biomass fuels costing $38/tonne would produce cheaper electricity than systems using only diesel fuel at 34¢/liter; however, the electric power from each of the Jyoti models was about 25% cheaper when biomass fuels cost only $10/ton.

Fast-growing Leucaena trees will be planted and harvested by members of tree-growing cooperatives to provide fuel for four 500kW Duvant gasifiers on a "dendrothermal" plantation in the Philippines. (See pp. 5 and 21-22 of the June 1983 BSR on "Bioenergy for Electric Power Generation.") The Philippine government plans to pay the cooperatives

$7.50/ton for the wood; this price does not include the costs of transporting, drying, and sizing the fuel.

The nearest thing to "free" biomass fuels are the biomass residues which are used as boiler fuels in many biomass processing mills around the world. The use of some of the most abundant mill residues is limited by their high ash content, high moisture content, small particle size, and/or limited seasonal availability. If it is technically feasible to use a residue as a gasifier fuel, there are usually substantial costs associated with the storage, preparation, and handling of the fuel.

There is very little published information on the labor costs associated with gasifier/engine systems. Present systems require at least one operator in more or less constant attendance when the system is running. Small systems require manual labor for fuel feeding, ash removal, filter cleaning, and related tasks, while larger systems require constant monitoring of automatic machinery and controls. The baseline case of the Earthscan economic analysis included the assumption that the 50 kW gasifier system would involve labor costs of $1,000 a year. When the labor and related maintenance costs were doubled, the cost of shaftpower from the medium-cost gasifier system rose from 16.8 to 20.3¢/kWh and the economic advantage of the system was virtually eliminated. Economic analyses of gasifier/engine systems in California and in Canada indicated that, due to the high wage levels in North America, labor costs would prevent the systems from being cost effective. However, as gasifier systems become more reliable, the necessary manual and monitoring tasks can increasingly be combined with other tasks at the site with significant reductions in the labor costs attributable to gasifier operation.

SUMMARY AND CONCLUSIONS

Recent experience has clearly demonstrated that biomass-fueled gasifier/engine systems can meet high priority needs for moderate amounts of mechanical and electrical power in rural areas in developing countries. However, several factors presently limit the wider use of these systems. Despite much recent progress, there remain many uncertainties concerning the effectiveness, reliability, and operating lifetime of the present equipment. Although a considerable number of firms now manufacture gasifier systems for use with engines, most of these firms have built only a few units; information on the design, performance, and reliability of the commercially-available systems is still quite limited. Cost effectiveness has been clearly demonstrated only with regard to the relatively small and comparatively low-cost charcoal gasifiers. The large-scale production and use of charcoal in gasifiers may not be both feasible and an optimal use of natural resources in very many countries. Wood gasification systems are available mainly from developed countries; in the absence of economies of scale which could undoubtedly be derived from mass production, the capital cost of many of the present systems seems excessive for many of the potential applications in developing countries.

There is an urgent need for much wider international sharing and evaluation of the recent experience with gasifier/engine systems. There is also a clear need for greater efforts by research institutions, development agencies, and manufacturing firms to develop low-cost gasifier systems whose cost effectiveness and reliability will meet the minimum requirements for wide use in devloping countries.

PUBLICATIONS ON PRODUCER GAS

Second Expert Consultation on Producer Gas Development, 1983, 420 pp., FAO Regional Office, Phra Atit Road, Bangkok 10200, Thailand.

Biomass Gasification in Developing Countries, by Gerald Foley & Geoffrey Barnard, 1983, 174 pp., $20, Earthscan, 10 Percy Street, London W1P ODR, U.K.

Small Scale Gas Producer-Engine Systems, by Albrecht Kaupp and John R. Goss, 1984, 284 pp., DM 56, GATE/GTZ, Postfach 5180, D-6236 Eschborn 1, Federal Republic of Germany.