PNAAR832

PN-AAR-832
493022
ISN-38227

TECHNICAL NOTE

NO. 7

THE BROAD-CRESTED WEIR

A SIMPLE - ACCURATE FLOW MEASURING DEVICE

for

IRRIGATION CHANNELS

LAM NAM OON

SAKON NAKHON, THAILAND

MARCH, 1983

ISSUED BY

CENTER FOR RURAL DEVELOPMENT

LOUIS BERGER INTERNATIONAL, INC. U.S.A.

UNDER CONTRACT WITH MINISTRY

OF AGRICULTURE AND CO-OPERATIVES OF THE

KINGDOM OF THAILAND

Work Performed By

WILLIAM C. BELL

FOREWORD

The Center for Rural Development, which is a Division of the Berger Group of companies, assists clients in planning and implementing programs and projects aimed to expand economic opportunities to improve the well-being of rural populations in many parts of the world.

Currently, in 1983, the Center supports ten major rural development projects which are funded by the World Bank, the U.S. Agency for International Development, the Asian Development Bank, and other international agencies in Asia, Africa, the Middle East, and Latin America.

As a part of its services to clients and the professional community of those engaged in rural development work, the Center releases technical notes on various aspects of individual projects. The notes are numbered by reference to the individual projects.

Technical Note No. 7 is issued as a part of that service.

For those interested, additional copies may be obtained from the Center for Rural Development, c/o Louis Berger International, Inc. 100 Halsted Street, East Orange, New Jersey 07019, U. S. A.

CONTENTS

I. Introduction

II. Design Criteria

III. Construction

IV. Recent Experience at Lam Nam Oon

V. References

Appendix A. Description and Use of the Broadcrested Weir Program

Appendix B. Computer Printout of Example

Appendix C. Computer Program

AUTHOR

BROAD-CRESTED WEIR

Simple-Accurate Flow Measuring Device for Irrigation Channels

I. Introduction

Poor irrigation water management in operational irrigation systems is a common problem in many developing countries. Many government agencies, donor agencies, as well as private concerns are being encouraged to develop water management programs or improve existing ones. A major step in implementing any program is measurement of irrigation water. Proper and successful water management depends on accurate flow rates.

Traditional water measuring devices such as sharp-crested weirs, and parshall, trapezoidal and cutthroat flumes are difficult, cumbersome, and expensive to use. This is especially true in retrofitting them to existing lined channels. Since these devices require calibration, field use is limited to particular shapes and sizes for which these calibrations were made. Any deviation in field construction from exact dimensions as calibrated results in a change of depth/discharge relationships. The strict dimensional requirements of these devices is expensive and difficult to obtain under field conditions. They also require a large head loss to obtain valid measurements of flow.

A new style of flume that is simple to construct has been developed that eliminates most of the problems of the more traditional devices. This flume resembles a modified broad crested weir (BCW) and is actually a style of long-throated flume, which is designated a BCW flume.

Mr. J.A. Replogle, et. al. of the U.S. has been responsible for developing the model for this type measuring device. See references for details of his mathematical model which will not be discussed here.

The mathematical model which has been derived and tested both in the lab and field, allows design of BCW's for any particular size and shape of channel. The BCW is simple to construct, causes very low head losses, and provides for accurate flow measurements. The computer program of the model is listed in appendix C. With the advent of microcomputers use of this model to design and produce a depth/discharge table is simple indeed.

II. Design Criteria

Figures 1 and 2 depict the BCW and pertinent dimensions. The important design dimensions are the sill length, L; and sill height, S. Of these the sill height is the most important design dimension since it controls the water level in the channel. It must be high enough to obstruct the flow so that the upstream level rises as shown in Figure 2. Field and lab tests have shown

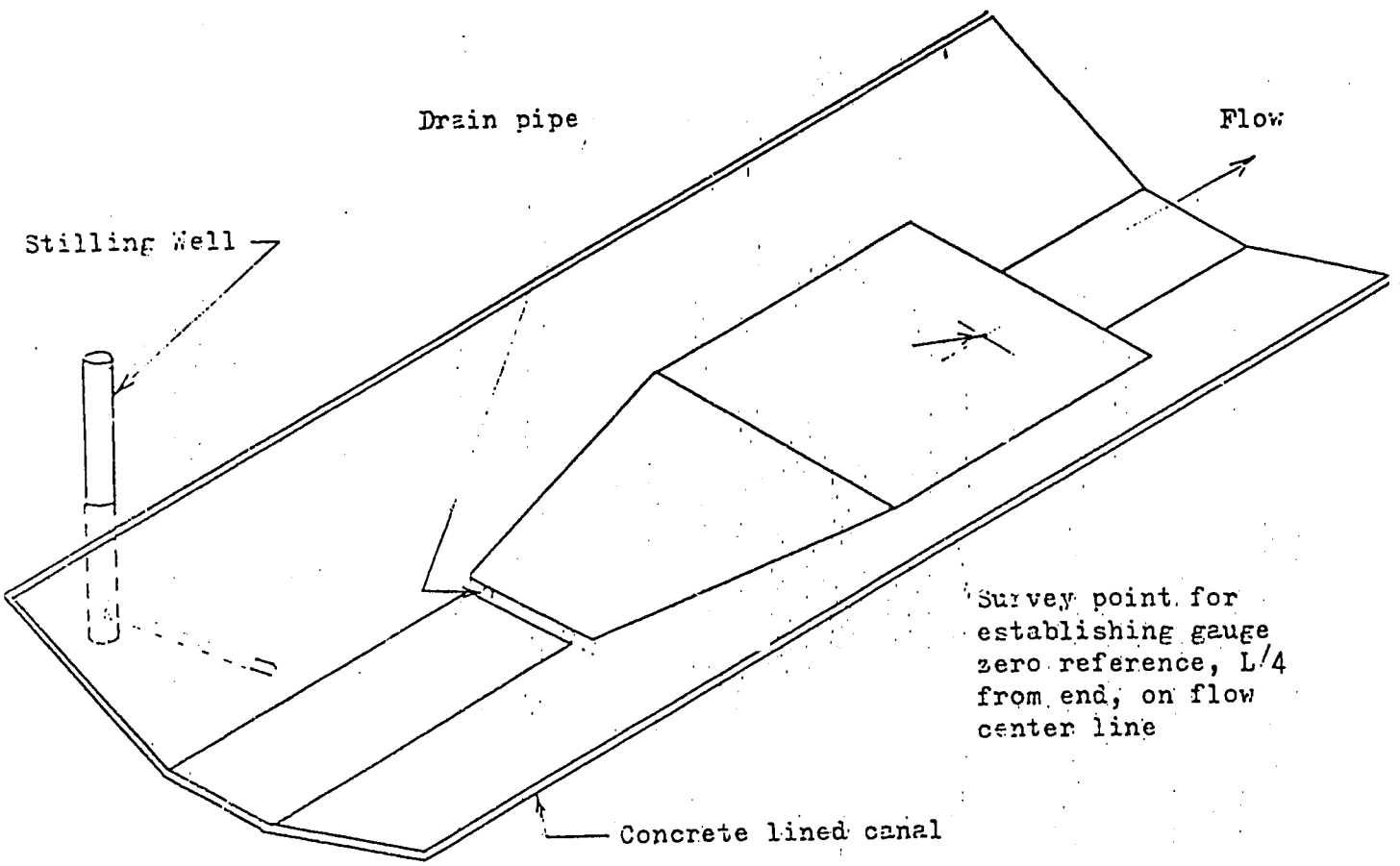

Fig. 1

Broadcrested Weir Flume

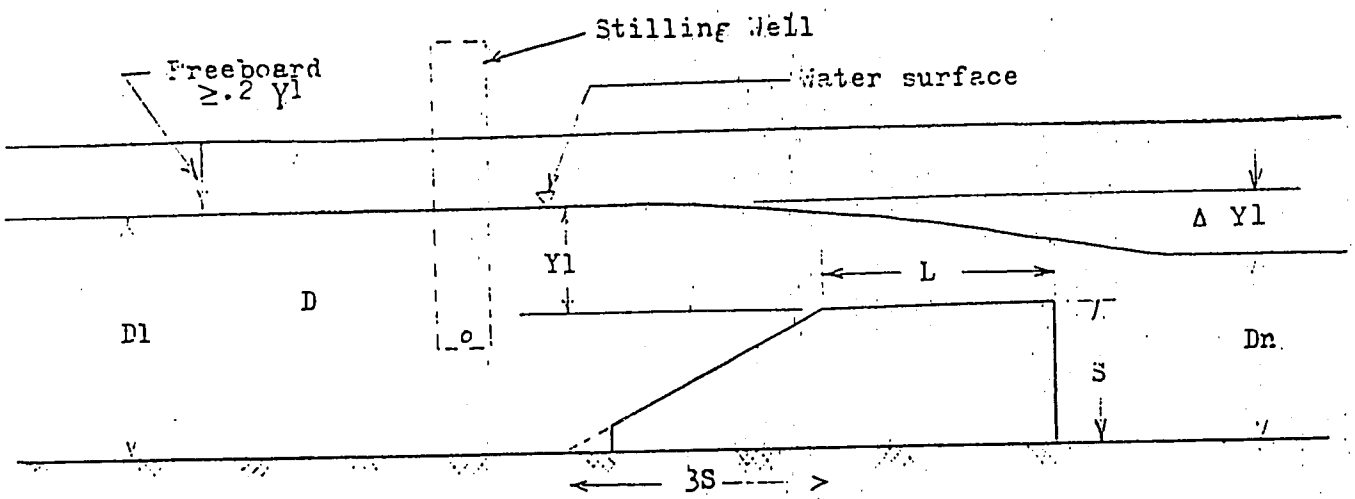

a) Section along center line

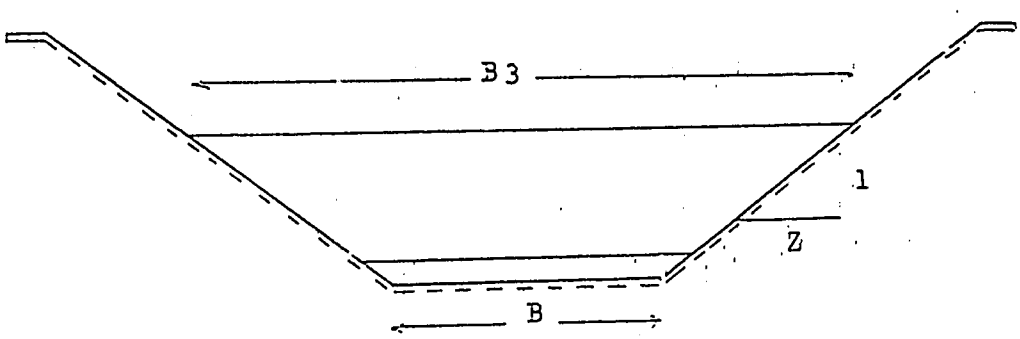

b) Cross section

Fig. 2
Broadcrested Weir Flume

that the flume will operate satisfactorily at a submergence of 85%. That is, the downstream depth should be no more than 85% of the upstream depth as measured from top of the sill. Also the sill height must not cause so much of an obstruction that the canal overflows upstream of the flume.

For low velocity flows a freeboard of 20% of Y1(the sill referenced depth) can be safely used. These two criteria must be met for full range of expected flows. Both are most crucial at the expected maximum flow. Therefore design is based on the expected maximum flow and associated maximum depth.

The sill length is less important in design. If it is too short flow lines in the throat section will not be parallel enough and flow ratings may vary by as much as 5%. In general the sill length should be at least two times the sill referenced depth (Y1) at maximum flow. However, a sill length longer than 20 times the least flow depth to be measured should be avoided because flow becomes uncertain.

The converging section (ramp) is constructed with a slope of 3:1 (horizontal to vertical) as this slope has been found sufficient to maintain parallel flow. Existing canal side slopes serve as part of the flume throat section. Usual construction practices for canals is sufficiently accurate for this section.

The BCW can be constructed with a diverging section, a 6:1 (horizontal to vertical) ramp, this will improve the submergence limit, in some instances up to 95%. For most common channels and conditions the diverging section is not necessary.

Design procedures are relatively straight-forward. The maximum flow and associated flow depth along with channel geometry (bottom width, side slopes, and constructed depth) are needed. The computer model previously mentioned is used for design and printing the depth/discharge tables. Use of the program in design and an example is given in appendices A and B.

III. Construction

After the BCW has been designed construction is relatively easy. A check of the channel in vicinity of flume location should be made to select a site where bottom and side slope irregularities are minimum. If the site has side slopes that deviate significantly from assumed design slope another site should be selected or the BCW design recalculated using actual values. This is especially true of the slopes above the throat section.

The BCW has two sections - the ramp and the sill. Width of the sill should be as near to calculated value as the desired accuracy of measurement. That is; a 1% error in width will cause about a 1% error in flow discharge. While the sill

height is of importance as it controls water levels and submergence, precise vertical location of the sill is not critical to discharge ratings except where it causes the flume width dimensions to vary significantly. Should the field constructed flume exceed a tolerable amount the computer model can be rerun with actual width to calculate new depth/discharge relationships. The sill should be leveled in both directions with no large irregularities. Sill lengths within 5-10 cm will cause negligible change in discharge, especially if the error makes the sill longer.

The upper edge of the ramp should join the sill such that it does not protrude above it, slightly rounding the joint corner is desirable. The ramp need not taper to zero thickness but can be ended abruptly at 5-8 cm thick. Drain tubes can be installed to allow draining the canal. Flow through the tubes will usually be small compared to flow through the BCW. They can however be plugged if desired.

The BCW can be cast in place concrete, either as one pour or two pours (one for the sill and one for the ramp). It can also be constructed with rock fill with a concrete cap. The concrete should be given a smooth broom or trowel finish.

It should be possible to make use of this BCW in unlined ditches if a section of the ditch above and below the flume is lined. This would be especially true on the downstream side to dissipate the energy due to the drop. Before adopting such a design some tests should conducted.

Flow measurements are relative to the depth of flow measured just upstream of the flume, Figure 1. This depth is measured with respect to top of sill elevation. A point on the sill at about L/4 from the downstream end and at centerline of flow is used as a reference. There are several ways to measure the depth of flow, including vertical staff gauge, inclined staff gauge, and stilling well. In using the staff gauges special attention must be given to locating the "zero point" of the gauge with respect to sill reference point. The use of a stilling well has been found relatively easy to install and use and gives very accurate results. Figure 3 shows a typical installation and how depth of flow is obtained. From the depth of flow value a corresponding value of flow is obtained from table of depth/discharge relations for the particular flume.

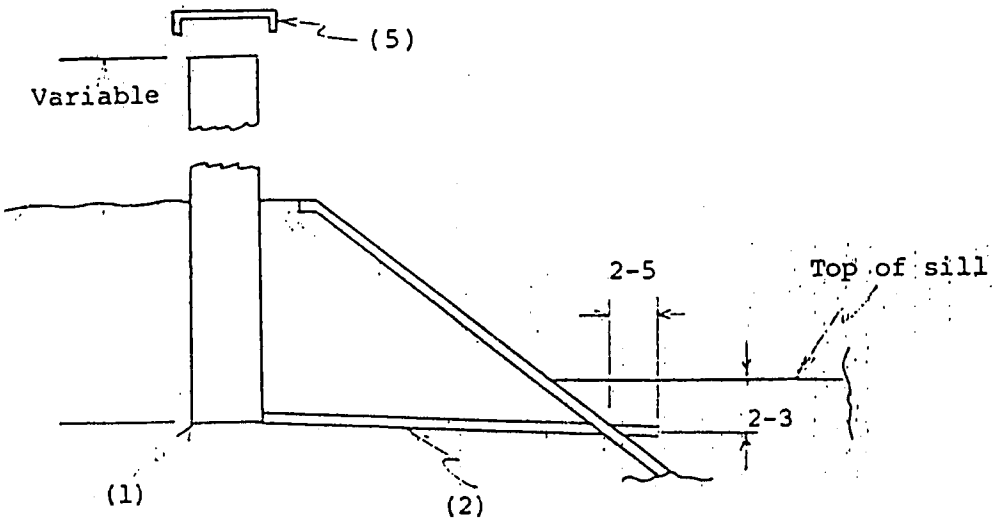

Detail of Stilling Well

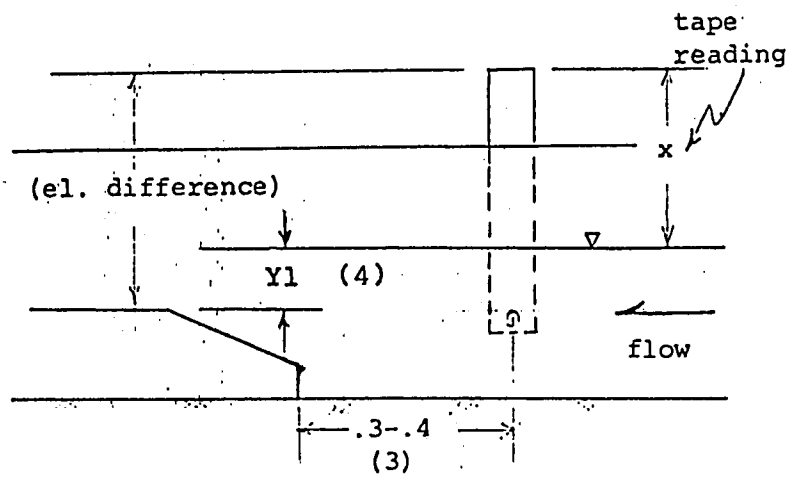

Flow Measurement

(1) Approximately 10 cm ϕ pipe of appropriate length to extend below elevation of top of sill.

(2) Approximately ½" ϕ pipe of appropriate length, welded to stilling well, sloped at slight engle to at least 2-3 cm below top of sill, and protrude 2-5 cm into the channel.

(3) Measuring point should be located about .3-.4 m upstream of the end of ramp.

(4) Depth of flow (Y1) is obtained by subtracting the tape reading (x) from the elevation difference.

(5) An appropriate cap for stilling well.

Figure 3

Stilling Well and Flow Measurement

III. Recent experience at Lam Nam Oon

Flow measurement at Lam Nam Oon has been non-existant in the past, other than using the rating curves, from design, for the main canal head regulators. There are several reasons for this. One major reason has been the lack of demand on the system in the past and therefore no real need for water management and water measurement. Others have to do with the physical system itself. No measuring devices are present in the main canals. Most laterals have constant head orifice (CHO) type turnouts from the main canals. These can be used to measure flow if they are calibrated and operated properly. At present none of the CHO's have been rated to determine the coefficient of discharge, nor do they have staff guages to set the proper head differential. Construction practices in regard to entrance conditions, gate installation, etc. affect the coefficient of discharge. Observation of existing CHO's show a variance in the conditions from one gate to another. Hence, a coefficient of discharge for one gate (or set of gates) will not likely be the same for others. Therefore all would have to be rated individually. Also, staff gauges would have to be properly installed (about 4 per lateral). With the CHO's rated and operated properly it is doubtful if they could be read to an accuracy of 5%.

It was with these difficulties of the present system in mind along with a need for easy, accurate flow measurements for initiating a water management program that the BCW was chosen as a measuring device. As mentioned earlier, its adaptability in design, ease of construction, and accuracy of measurement make it ideally suited to project conditions.

Two BCWs were installed in laterals off the Right Main Canal at Lam Nam Oon in December 1982 and have been in operation during the following irrigation season. The larger one designed for a maximum flow of 1.34 m^3/sec with sill height of 0.45 m, width of 2.85 m and length of 1.0 m. The smaller one was for a maximum flow of 0.26 m^3/sec. Both were constructed of rock fill and capped with about 10 cm. of concrete. A stilling well of approximately 10 cm diameter was chosen as being the best alternative for measuring flow depth. Construction time for each was about one day.

Three seperate measurements of the larger one was made by Lam Nam Oon staff and personnel from RID's hydraulic lab. These were made with a calibrated pitot tube taking numerous velocity measurements in the flow cross section. Comparison of the flows calculated with the pitot tube and those for the BCW were all less than three percent. Overall the BCWs have functioned as expected with no problems. Further plans are to install BCWs in all the laterals and possibly in the main canals at strategic points.

After installing the larger Broad crested Weir it was tested to determine if at maximum Q it functioned properly. It was found that the maximum Q it could handle and not be submerged was about 0.8 m^3/sec. this is about 60% of the designed value for the canal. The cause for this stems from the assumed design value of roughness (Manning's n) of the concrete lined canal and that of the actual conditions that exist now. The assumed value in design was 'n' = 0.014, from the Handbook of Hydraulics, this represents a concrete lined channel in 'good' condition. None of the canals at Lam Nam Oon, at present, meet this condition. Previous checks in some other canals gave figures on 'n' ranging from 0.02 to 0.04.

The value of 'n' has a direct effect on the depth of flow at a particular flow. The following shows this:

'N'	Depth
0.014	0.75
0.016	0.83
0.018	0.85
0.020	0.90

This increase in depth of flow, under actual conditions, downstream of the weir has the effect of causing submergence at a flow less than Q maximum.

To eliminate this problem two things can be done. First, is to assure that the canal is kept clean and meets the assumptions of design. Under actual conditions this may be difficult. Improvement can be acheived but not likely to original assumptions. Second, in designing the Broad crested Weir use a value of 'n' that will most likely represent the actual field conditions. This will reflect the increase in flow depth and consequently the design height of the Broad creasted Weir.

One advantage of using the Broad crested Weir is; if the sill height as designed and constructed is found later to not be high enough to pass the flow required without submergence the sill height can easily be raised. This is accomplished by adding an additional layer of concrete to the Broad crested Weir. The flow/depth relationships are then recalculated for the new height. Doing this may entail increasing the height of the lining upstream of the Broad crested Weir somewhat to meet new freeboard requirements.

Other recent experience with the BCW has been in the U.S. where two large BCW's were recently installed; one designed for about 57 m^3/sec., 16.46 m wide, sill height of 1.22 m and length of 3.66 m in Arizona; one of about 15 m^3/sec. in Idaho. Both are performing well and flow meter comparison show excellent agreement.

V. References

Replogle, J.A. and Clemmens, A.J., "Modified Broad-Crested Weirs for Lined Channels," Proceedings of the Speciality Conference on Irrigation and Drainage - Today's challenges, Bolse, Idaho, July 1980

Replogle, J.A., "Critical-Flow Flumes with Complex Cross Sections", Proceedings of the ASCE Irrigation and Drainage Division Speciality Conference, Logan, Utan, August 1975.

Replogle, J.A. and Clemmens, A.J., "Measuring Flumes of Simplified Construction," transactions of the ASAE Vol. 24, No. 2, St. Joseph, Michigan.

Clemmens A.J. and Replogle, J.A., "Constructing Simple Measuring Flumes for Irrigation Canals," Farmers Bulletin No. 2268, U.S. Dept. at Agriculture.

Replogle, J.A., Personal correspondence May and June 1982.

King, H.W. and Brater, E.F.: "Handbook of Hydraulics", 5th edition, McGraw-Hill Book Co. Inc., N.Y. 1963.

APPENDIX A

DESCRIPTION AND USE OF THE BROADCRESTED WEIR PROGRAM

The program, written in BASIC for the Apple III computer provides a model to calculate flow through the broadcrested weir. The program consists basically of four parts:

1) Input of intitial data.
2) Initial calculations whereby a sill height is found that is approximately a minimum for submergence.
3) A "Rerun" with new values of sill height and length.
4) Printing of summary design table and depth/discharge tables.

The heart of the program is the main subroutine. This portion was adapted from an SCS program by Replogle. Remainder of the program was written to assist in designing a BCW from given data, checking the design and printing the desired tables. Figure A1 is a general flow chart of the program.

The program is run from a "menu" where the appropriate option is selected, prompts of "Press Return to Cont." are at the end of each portion of the program. This allows viewing of calculations on the console and when "Return" is pressed the program proceeds to next step or back to main menu for next option.

15

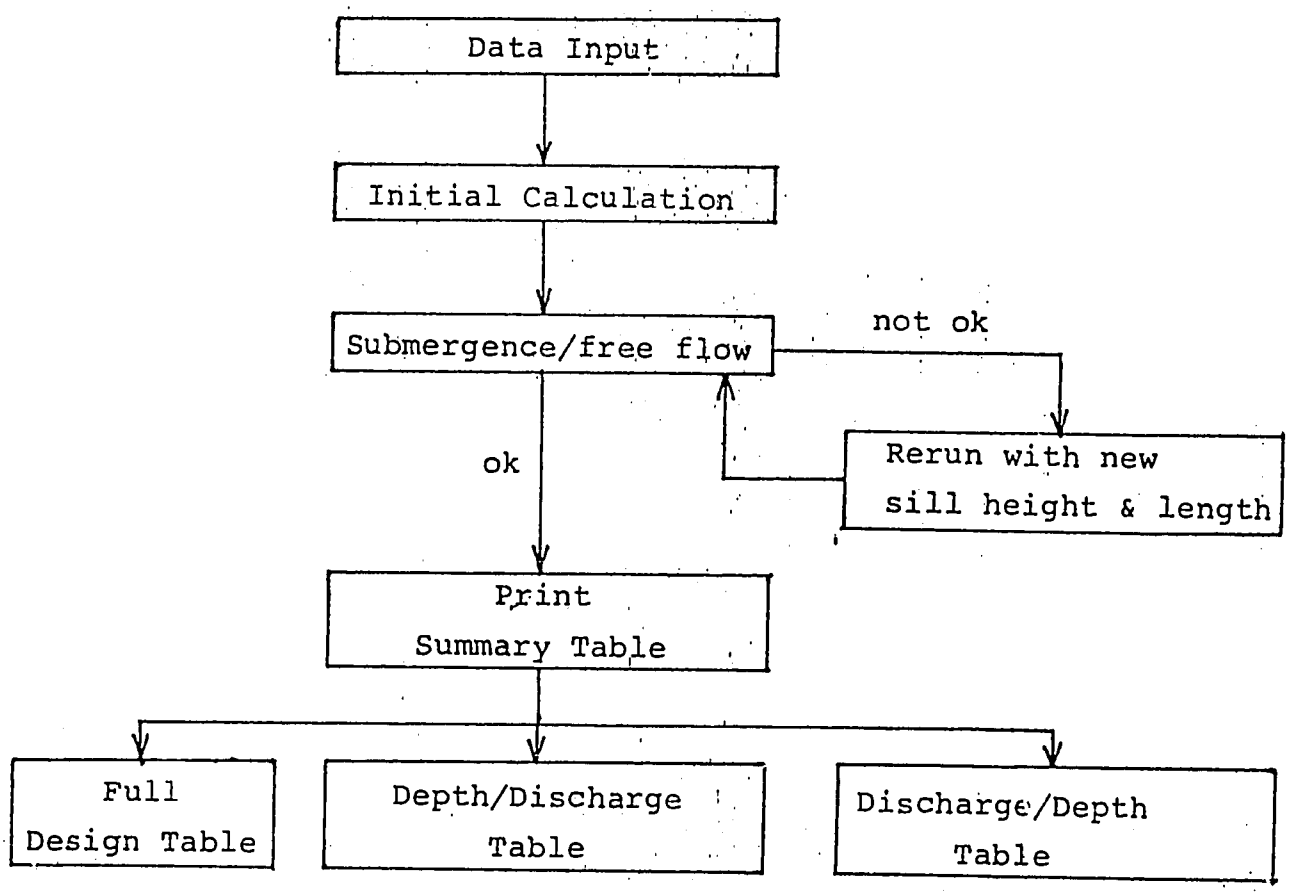

Figure A1
General Flow Chart

16

The following is a brief description of how the program is used to design a BCW and print the tables, Appendix B shows an example:

When the program is run select option 1, "Input for Weir Design". At the prompts, data pertaining to the particular channel is entered appropriately. The program then calculates a value of sill height, by iteration, such that the sill height is approximately a minimum for submergence (that is the "Submergence Check" in the table will be at or near zero). At the end of this calculation the table is printed to the screen for observation. If the "Submergence Check" is zero or positive this sill height can be used as is. However if there is enough available freeboard a slightly higher value would allow for unforeseen values of Q greater than design. If the "Submergence Check" is negative a higher valve must be used to insure no submergence at maximum flow. Also an even value of sill height (at least to a whole number) will make construction easier. One criteria for design of the weir is the sill length should be at least 2 times the flow depth at maximum flow. The initial value is 2.1 times the flow depth. Again an even value of sill length will make construction easier.

After noting the above in the table (presented on the screen) return to the main menu and select option 2, "Rerun with New Sill Height".

At the prompt, enter new sill height and length (if desired). The calculations will then be rerun with these new values. At the end of calculations a table of new values will be shown. If the submergence and freeboard checks are OK then design is finished. Return to main menu.

At this point select option 3, "Print Summary Table". The table (as shown previously) will be listed (to printer or console). For record purposes it is recommended that a copy of this table be kept to show what values were used and arrived at in the calculations. Return to main menu.

Select option 4, "Print Tables". This will lead to a selection of particular tables, select option 1, "Full design table". As above this should be kept as part of the record for each design as it lists some important design values. Return to main menu.

Again select option 4. At this point a table is to be printed for use by field workers. In most cases the depth/discharge table is the most appropriate and easiest to use. However, in some circumstances the discharge/depth table is better. Make proper selection and table is printed. The other option under print tables is "Input (only to print tables)". This is used normally to print new tables for field use where design has already been completed. Selecting this option will lead to inputing initial data (can be obtained from summary table) and sill height and length. After inputting this information selection of appropriate table is made and the table is printed. Return to main menu.

If another weir is to be designed select option 5, "Another weir" and begin the process again. If finished select option 6, "Quit" to terminate the program.

APPENDIX B

COMPUTER PRINTOUT OF EXAMPLE

```
NAME OF CANAL          ?R-15L
LOCATION OF WEIR       ?0+050

CONSTRUCTED DEPTH  OF CANAL    ?.85
BOTTOM WIDTH                    ?1
SIDE SLOPES                     ?1.5
MAXIMUM DISCHARGE               ?0.89
FLOW DEPTH AT Qmax              ?.7
DOES WEIR HAVE A DIVERGING SECTION ?  'Y/N'      ?Y

IS ALL DATA ENTERED CORRECTLY  ?  'Y/N'   Y
```

This is the input screen where appropriate data for the particular canal is entered.

20

INITIAL CONDITIONS

CONSTRUCTED DEPTH	0.85	MAXIMUM Q	0.89
BOTTOM WIDTH	1.00	FLOW DEPTH	0.70
SIDE SLOPES	1.50	FREEBOARD	0.15

WEIR SELECTION

LENGTH OF SILL 0.685 HEIGHT OF SILL 0.425

SUBMERGENCE—FREEFLOW CHECK, WEIR IN PLACE

SILL REF. FLOW DEP. @ Qmax	0.327	Qmax @ this depth	0.890
UPSTREAM WATER DEPTH	0.752		
ACT. INC. IN WATER DEPTH	0.052		
REQ. INC. IN WATER DEPTH	0.049		
SUBMERGENCE CHECK	0.003		

(this is approx. a min. value for SILL HEIGHT— if neg. then a higher value should be used)

ACTUAL FREEBOARD	0.038
REQUIRED FREEBOARD	0.065
FREEBOARD CHECK	0.033

(if neg. try a lower val. of SILL HEIGHT)

(the sill lt. - 0.685 is 2.1 * flow dep. @ Qmax - a longer lt. may be used)

Least FLOW DEPTH to be measured is 0.034

Initial calculation of weir, here the submergence check will be near zero. These checks can be considered and either accepted or rerun with new sill height and length.

21

OLD SILL HEIGHT = 0.43 OLD SILL LENGTH = 0.69

New value of SILL HEIGHT .45

Input new value for SILL LENGTH if wanted else PRESS RETURN 1

Considering the initial calculation, the submergence check was 0.003, freeboard check 0.033, and length and height values to 3 decimal places. It may be better to raise the sill height some to assure no submergence at slightly greater than maximum flow conditions. Both length and height are selected to nearest centimeter. This is the input for the rerun.

NAME OF CANAL R-15L LOCATION 0+050

INITIAL CONDITIONS

CONSTRUCTED DEPTH	0.85	MAXIMUM Q	0.89
BOTTOM WIDTH	1.00	FLOW DEPTH	0.70
SIDE SLOPES	1.50	FREEBOARD	0.15

WEIR SELECTION

LENGTH OF SILL 1.000 HEIGHT OF SILL 0.450

SUBMERGENCE--FREEFLOW CHECK, WEIR IN PLACE

SILL REF. FLOW DEP. @ Qmax	0.323	Qmax @ this depth	0.890
UPSTREAM WATER DEPTH	0.773		
ACT. INC. IN WATER DEPTH	0.073		
REQ. INC. IN WATER DEPTH	0.048		
SUBMERGENCE CHECK	0.025		
ACTUAL FREEBOARD	0.077		
REQUIRED FREEBOARD	0.065		
FREEBOARD CHECK	0.012		

Least FLOW DEPTH to be measured is 0.050

VOLUMN OF STRUCTURE = 1.26 M3

This is the rerun calculations showing submergence check higher and freeboard lower. Both are positive so this weir design is satisfactory. This is the summary table that is printed for the record.

FLUME DIMENSIONAL DATA (M) :

SILL LENGTH = 1
SILL HEIGHT = .45

B1	Z1	B3	L2
1.00	1.5	2.35	1.35

Y1 M	Q M3/S	YC M	FR. # AT Y	IDEAL Q	DISC COF	V1	ALF 3	V3
0.100	0.1285	0.07	0.0665	0.1339	0.9587	0.13	1.019	0.79
0.110	0.1497	0.07	0.0748	0.1555	0.9627	0.15	1.017	0.82
0.120	0.1722	0.08	0.0833	0.1783	0.9653	0.16	1.015	0.86
0.130	0.1958	0.09	0.0917	0.2024	0.9675	0.18	1.014	0.90
0.140	0.2208	0.09	0.1001	0.2277	0.9694	0.20	1.013	0.93
0.150	0.2469	0.10	0.1084	0.2542	0.9711	0.22	1.012	0.97
0.160	0.2742	0.11	0.1167	0.2820	0.9726	0.23	1.011	1.00
0.170	0.3028	0.12	0.1250	0.3109	0.9740	0.25	1.010	1.03
0.180	0.3326	0.12	0.1331	0.3410	0.9752	0.27	1.010	1.06
0.190	0.3635	0.13	0.1412	0.3723	0.9764	0.29	1.009	1.09
0.200	0.3957	0.14	0.1492	0.4048	0.9774	0.31	1.008	1.12
0.210	0.4290	0.15	0.1572	0.4385	0.9784	0.33	1.008	1.14
0.220	0.4636	0.15	0.1650	0.4734	0.9793	0.35	1.007	1.17
0.230	0.4993	0.16	0.1727	0.5095	0.9801	0.36	1.007	1.20
0.240	0.5362	0.17	0.1804	0.5467	0.9808	0.38	1.007	1.22
0.250	0.5744	0.18	0.1879	0.5852	0.9816	0.40	1.006	1.25
0.260	0.6137	0.18	0.1953	0.6248	0.9823	0.42	1.006	1.27
0.270	0.6542	0.19	0.2027	0.6656	0.9829	0.44	1.006	1.30
0.280	0.6960	0.20	0.2099	0.7076	0.9835	0.46	1.005	1.32
0.290	0.7389	0.21	0.2170	0.7509	0.9840	0.47	1.005	1.34
0.300	0.7830	0.21	0.2241	0.7953	0.9846	0.49	1.005	1.37
0.310	0.8284	0.22	0.2310	0.8409	0.9851	0.51	1.005	1.39
0.320	0.8750	0.23	0.2379	0.8878	0.9856	0.53	1.004	1.41
0.330	0.9228	0.24	0.2446	0.9358	0.9860	0.55	1.004	1.43
0.340	0.9718	0.25	0.2512	0.9851	0.9865	0.56	1.004	1.45

Full design table that includes such values as critical depth, Froude number, discharge coefficient, etc.

FLUME DIMENSIONAL DATA (M) :

SILL LENGTH = 1
SILL HEIGHT = .45

B1	Z1	B3	L2
1.00	1.5	2.35	1.35

Y1 M	Q M3/S
0.100	0.1285
0.110	0.1497
0.120	0.1722
0.130	0.1958
0.140	0.2208
0.150	0.2469
0.160	0.2742
0.170	0.3028
0.180	0.3326
0.190	0.3635
0.200	0.3957
0.210	0.4290
0.220	0.4636
0.230	0.4993
0.240	0.5362
0.250	0.5744
0.260	0.6137
0.270	0.6542
0.280	0.6960
0.290	0.7389
0.300	0.7830
0.310	0.8284
0.320	0.8750
0.330	0.9228
0.340	0.9718

Depth/Discharge table, probably the most useful for field use by zonemen or gatetenders.

FLUME DIMENSIONAL DATA (M) :

SILL LENGTH = 1
SILL HEIGHT = .45

B1	Z1	B3	L2
1.00	1.5	2.35	1.35

Q M3/S	Y1 M
0.05	0.055
0.10	0.085
0.15	0.110
0.20	0.132
0.25	0.151
0.30	0.169
0.35	0.186
0.40	0.201
0.45	0.216
0.50	0.230
0.55	0.244
0.60	0.257
0.65	0.269
0.70	0.281
0.75	0.293
0.80	0.304
0.85	0.315
0.90	0.325

Discharge/Depth table, may at times be appropriate.

Appendix C

COMPUTER PROGRAM

PAGE 1

NAME OF THIS PROGRAM IS BROADCRESTED WEIR

PROGRAMED BY wm c bell DATE: 4 FEB 83

```
10   REM        *****  BROAD CRESTED WEIR FLUME MODEL.*****
20   REM
30   REM This program adapted for the APPLE III from SCS PRG.  NOV 1982
                                                          wm c bell
40   REM It models the flow for TRAPEZOIDAL FLUMES
          This prg. takes the initial condition and iterates Y3, Y1, AND Y8
            to approximate a MINIMUM value for the SILL HEIGHT
50   REM       it provides for a RERUN to allow altering the SILL HEIGHT
                and/or the SILL LENGTH - it prints a SUMMARY TABLE, FULL
                 DESIGN TABLE, DEPTH/DISCHARGE TABLE & DISCHARGE/DEPTH TABLE
60   CLEAR:GOSUB 2310
70   REM
80   REM                                MAIN MENU
90   REM
100   HOME:VPOS=3
110   PRINT:PRINT TAB(15);"   1)  INPUT FOR WEIR DESIGN"
120   PRINT:PRINT TAB(15);"   2)  RERUN WITH NEW SILL HEIGHT"
130   PRINT:PRINT TAB(15);"   3)  PRINT SUMMARY TABLE"
140   PRINT:PRINT TAB(15);"   4)  PRINT TABLES"
150   PRINT:PRINT TAB(15);"   5)  ANOTHER WEIR"
160   PRINT:PRINT TAB(15);"   6)  QUIT":PRINT
170   VPOS=22:HPOS=35:INPUT"SELECT OPTION   ";A$
180   A=VAL(A$):IF A<1 OR A>6 THEN 170
190   ON A GOTO 240,450,1590,1390,60,200
200   CLOSE:END
210   REM
220   REM                                INPUT DATA
230   REM
240   HOME:VPOS=5:HPOS=10:PRINT"NAME OF CANAL ":PRINT:HPOS=10:PRINT"LOCATION O
      F WEIR ":PRINT:PRINT
250   PRINT"CONSTRUCTED DEPTH  OF CANAL ":PRINT:PRINT"BOTTOM WIDTH":PRINT:PRIN
      T"SIDE SLOPES":PRINT:PRINT"MAXIMUM DISCHARGE ":PRINT:PRINT"FLOW DEPTH AT
       Qmax ":PRINT:PRINT"DOES WEIR HAVE A DIVERGING SECTION ?  'Y/N' "
260   VPOS=5:HPOS=30:INPUT CAN$:IF LEN(CAN$)<1 OR LEN(CAN$)>20 THEN 260
270   VPOS=7:HPOS=30:INPUT LOC$:IF LEN(LOC$)<1 OR LEN(LOC$)>20 THEN 270
280   VPOS=10:HPOS=32:INPUT D$:D=VAL(D$):IF D<.01 OR D>10 THEN 280
290   VPOS=12:HPOS=32:INPUT B1$:B1=VAL(B1$):IF B1<.1 OR B1>10 THEN 290
300   VPOS=14:HPOS=32:INPUT Z1$:Z1=VAL(Z1$):IF Z1<.5 OR Z1>5 THEN 300
310   VPOS=16:HPOS=32:INPUT Q$:Q=VAL(Q$):IF Q<.01 OR Q>100 THEN 310
320   VPOS=18:HPOS=32:INPUT DH$:DH=VAL(DH$):IF DH<.1 OR DH>9 THEN 320
330   VPOS=20:HPOS=50:INPUT A$:IF A$<>"Y" AND A$<>"N" THEN 330
340   PRINT
```


26

```
350   VPOS=23:HPOS=20:INPUT"IS ALL DATA ENTERED CORRECTLY  ?  'Y/N'   ";ANS$
360   IF ANS$<>"Y" AND ANS$<>"N" THEN 350
370   IF ANS$="N" THEN 240
380   IF A$="Y" THEN TTT=1
390   IF FLG4=1 THEN 1480
400   REM
410   REM                        INITIAL CALCULATION
420   REM
430   PRINT CHR$(14):FLG2=1:FLG3=0:GOSUB 610:PRINT CHR$(7):PRINT CHR$(15):HOME
      :GOSUB 1030
440   HPOS=50:VPOS=23:INPUT"PRESS RETURN TO CONT.  ";A$
450   IF A$<>"" THEN 440:ELSE 100
460   REM
470   REM                        RERUN CALCULATION
480   REM
490   HOME:QAZ=2:VPOS=5:PRINT USING"20A,3X,1#.2#,10X,20A,3X,1#.2#";"OLD SILL H
      EIGHT = ",Y8,"OLD SILL LENGTH = ",L3
500   FLG1=1:FLG2=1:FLG3=1
510   VPOS=8:INPUT"New value of SILL HEIGHT    ";Y8$:Y8=VAL(Y8$)
520   IF Y8$<.01 OR Y8$>5 THEN 510
530   VPOS=10:INPUT"Input new value for SILL LENGTH if wanted else PRESS RETUR
      N  ";A$
540   IF VAL(A$)=0 THEN L3=2.1*Y1:ELSE L3=VAL(A$):PRINT CHR$(14):GOSUB 620:PRI
      NT CHR$(15)
550   HOME:GOSUB 1030
560   HPOS=50:VPOS=23:INPUT"PRESS RETURN TO CONT. ";A$
570   IF A$<>"" THEN 560:ELSE 100
580   REM
590   REM                        ITERATE FOR Y3 & Y1
600   REM
610   Y8U=D:Y8L=D1:Y8=(Y8U+Y8L)/D3
620   B3=B1+Y8*Z1*D3:L2=D4*Y8
630   H6=D1:A1=D2:A3=D2:Y4=D1
640   Y4=Y3
650   Y3=(( FN N(Y3)*A3*Q*Q)/G)^J8)/(Z1*Y3+B3)
660   IF ABS(Y3-Y4)<=D7*Y4 THEN 670:ELSE 640
670   Y=Y1+Y8
680   Y1=Y3-A1*(Q*Q/(D3*G* FN E(Y)^D3))+ FN C(Y3)/(D3* FN N(Y3))+H6
690   IF ABS(Y5-Y1)<=.01*Y1 THEN 720
700   Y5=Y1:IF FLG1=D2 THEN L3=L3:ELSE L3=2.1*Y1
710   GOSUB 970:GOTO 910
720   IF FLG3=1 THEN RETURN
730   IF FLG3=2 THEN RETURN
740   REM
750   REM                          ITERATE SILL HEIGHT (Y8)
760   REM
770   IF ABS((Y8+Y1-DM)-(J9*Y1))<=.01*Y8 THEN RETURN'
780   IF Y8+Y1-DM<.15*Y1 THEN Y8L=Y8
790   IF Y8+Y1-DM>.15*Y1 THEN Y8U=Y8
800   Y8=(Y8L+Y8U)/D3:GOTO 620
```


27

```
810   REM                                MAIN SUBROUTINE
820   REM          This is the main part of the mathematical model
830   REM
840   B3=B1+Y8*Z1*D3:L2=D4*Y3
850   Y=Y8+Y1:M=D1:Q5=D1:H6=D1:Q=D1:A1=D2:A3=D2:Y3=.7*Y1
860   Q3=Q:Q=(G* FN C(Y3)^D4/(A3* FN N(Y3)))^D5:IF ABS(Q-Q3)<D6*Q THEN 890
870   Y4=Y3
880   Y0=Q*Q/(D3*G* FN E(Y)^D3):Y0=Y0*A1+Y1-H6:Y3=Y0- FN C(Y3)/(D3* FN N(Y3)):
      IF ABS(Y3-Y4)<D6*Y4 THEN 860:ELSE 870
890   IF M>D1 THEN 900:ELSE Q9=Q:M=D2
900   IF ABS(Q5-Q)<D7*Q THEN 950:ELSE Q5=Q:GOSUB 970
910   E=D8*SQR(C6):A2=D9* FN D(Y3)/ FN N(Y3)-D5:IF A2<D3 THEN 920:ELSE A2=D3
920   A4=F2*L3/( FN C(Y3)/ FN D(Y3))-F3:IF A4>D1 THEN 930:ELSE A4=D1
930   IF A4<D2 THEN 940:ELSE A4=D2
940   A3=D2+(D4*E*E-D3*E^D4)*A2*A4:A1=F5:ON FLG2 GOTO 650,880
950   F1=Q/( FN E(Y)^F4*(G/ FN T(Y))^D5):V=Q/ FN E(Y):V3=Q/ FN C(Y3):C4=Q/Q9
960   RETURN
970   R=Q/ FN C(Y3)*L3/V1:R5=F6+L3/K:C1=F7/SQR(R):X1=R:X2=L3:GOSUB 1020
980   C8=C0:IF R<R5 THEN 990:ELSE X1=R5:X2=R5*V1/(Q/ FN C(Y3)):GOSUB 1020:C8=C
      0:C7=C6-(R5/R)*(C8-C1):GOTO 1000
990   C7=C1
1000   H3=C7* FN D(Y3)*L3*Q*Q/(D3*G* FN C(Y3)^D4):Y2=Y3+F8*(Y1-Y3)
1010   H2=( FN P(Y)*L2*Q*Q/ FN E(Y)^D4+ FN D(Y2)*L2*Q*Q/ FN C(Y2)^D4)*F9/(J7*G
       ):H1=F9* FN P(Y)*L1*Q*Q/(D3*G* FN E(Y)^D4):H6=H1+H2+H3:RETURN
1020   C0=J1
1030   C9=C0:J=J2*SQR(C0):C0=J/(J6*SQR(C0)-J3-LOG(D2/(X1*C0)+D2/(J4*X2/K*SQR(C
       0)))):IF ABS(C0-C9)>J5 THEN 1030:ELSE RETURN
1040   REM
1050   REM                          TABLE OF WEIR SELECTION
1060   REM
1070   IMAGE 35A,3#.3#
1080   IMAGE 20A,2#.2#,10X,15A,3#.2#
1090   PRINT SPC(25);"INITIAL CONDITIONS":PRINT
1100   PRINT USING 1080;"CONSTRUCTED DEPTH",D,"MAXIMUM Q",Q
1110   PRINT USING 1080;"BOTTOM WIDTH",B1,"FLOW DEPTH",DM
1120   PRINT USING 1080;"SIDE SLOPES",Z1,"FREEBOARD",D-DM:PRINT
1130   IF QAZ=2 THEN 1160
1140   VPOS=23:HPOS=50:INPUT"Press RETURN to continue     ";A$
1150   IF A$<>"" THEN 1140:ELSE HOME
1160   PRINT SPC(25);"WEIR SELECTION"
1170   PRINT USING"5X,16A,3#.3#";"LENGTH OF SILL",L3;:PRINT USING"10X,16A,3#.3
       #";"HEIGHT OF SILL",Y8:PRINT
1180   PRINT"          SUBMERGENCE--FREEFLOW CHECK, WEIR IN PLACE":PRINT
1190   PRINT USING 1070;"SILL REF. FLOW DEP. @ Qmax",Y1;:PRINT USING"7X,18A,3#
       .3#";"Qmax @ this depth",Q
1200   PRINT USING 1070;"UPSTREAM WATER DEPTH",Y8+Y1
1210   PRINT USING 1070;"ACT. INC. IN WATER DEPTH",Y8+Y1-DM
1220   PRINT USING 1070;"REQ. INC. IN WATER DEPTH",J9*Y1
1230   PRINT USING 1070;"SUBMERGENCE CHECK",Y8+Y1-DM-(J9*Y1)
1240   IF QAZ=2 THEN 1270
```

```
1250   PRINT"    (this is approx. a min. value for SILL HEIGHT— if mea. then
       a higher"
1260   PRINT SPC(30);"value should be used)"
1270   PRINT:IF D-Y1-Y8-(.2*Y1)<0 THEN PRINT SPC(10);"***** NOT ENOUGH FREEBOA
       D FOR THIS CONDITION *****":GOTO 1330
1280   PRINT USING 1070;"ACTUAL FREEBOARD",D-Y8-Y1
1290   PRINT USING 1070;"REQUIRED FREEBOARD",.2*Y1
1300   PRINT USING 1070;"FREEBOARD CHECK",D-Y8-Y1-(.2*Y1)
1310   IF QAZ=2 THEN PRINT:GOTO 1340
1320   PRINT"    (if mea. try a lower val. of SILL HEIGHT)":PRINT
1330   PRINT:PRINT USING"16A,3#.3#,3X,60A";"(the sill lt. - ",L3,"is 2.1 * flo
       w dep. @ Qmax - a lower lt. may be used)"
1340   PRINT USING 1070;"Least FLOW DEPTH to be measured is = ",L3/20
1350   RETURN
1360   REM
1370   REM                    PRINT DEPTH-DISCHARGE TABLE SELECTION
1380   REM
1390   HOME:VPOS=5
1400   PRINT:PRINT TAB(15);"   1)  FULL DESIGN TABLE"
1410   PRINT:PRINT TAB(15);"   2)  DEPTH/DISCHARGE TABLE"
1420   PRINT:PRINT TAB(15);"   3)  DISCHARGE/DEPTH TABLE"
1430   PRINT:PRINT TAB(15);"   4)  INPUT ( ONLY TO PRINT TABLES )"
1440   VPOS=22:HPOS=35:INPUT"SELECT OPTION   ";A$
1450   A=VAL(A$):IF A<1 OR A>4 THEN 1440
1460   IF A=4 THEN FLG4=1
1470   ON A GOTO 1670,1810,1940,240
1480   HOME:VPOS=8
1490   PRINT"INPUT IS FOR TABLES ONLY—INPUT SILL HEIGHT AND SILL LENGTH":PRIN
       T:PRINT
1500   VPOS=11:INPUT"SILL HEIGHT   ";Y8$:Y8=VAL(Y8$):IF Y8<.01 OR Y8>5 THEN 15
       00
1510   PRINT
1520   VPOS=13:INPUT"SILL LENGTH   ";L3$:L3=VAL(L3$):IF L3<.01 OR L3>9 THEN 15
       20
1530   VPOS=15:PRINT"MAKE TABLE SELECTION FROM MENU"
1540   VPOS=23:HPOS=50:INPUT"PRESS RETURN TO CONT.   ";A$
1550   IF A$<>"" THEN 1540:ELSE 1390
1560   REM
1570   REM                        PRINT SUMMARY TABLE  SUB.
1580   REM
1590   QAZ=2:GOSUB 2240
1600   HOME:PRINT"NAME OF CANAL  ";CAN$; TAB(30);"LOCATION    ";LOC$:PRINT
1610   GOSUB 1080:QAZ=1:GOSUB 2210:CLOSE
1620   HPOS=50:VPOS=23:INPUT"PRESS RETURN TO CONT.  ";A$
1630   IF A$<>"" THEN 1620:ELSE 100
1640   REM
1650   REM                       FULL DESIGN TABLE
1660   REM
1670   GOSUB 2240:FLG1=1:FLG2=1:FLG3=1:IF FLG4=1 THEN PRINT CHR$(14):GOSUB 620
       :PRINT CHR$(15)
```

```
1680   XYZ=1:YL=Y1:QL=Q:FLG2=2:FLG4=0:HOME:GOSUB 2070
1690   LO=((INT(Y1*100))/100)+.02
1700   FOR Y1=.1 TO LO STEP .01
1710     GOSUB 840:IF CC=5 THEN PRINT:CC=0
1720     PRINT USING 1770;Y1,Q,Y3,F1,Q9,C4,V,A3,V3:CC=CC+1
1730     NEXT
1740   CLOSE:CC=0:Y1=YL:Q=QL:PRINT:PRINT
1750   VPOS=23:HPOS=50:INPUT"PRESS RETURN TO CONT.  ";A$
1760   IF A$<>"" THEN 1750:ELSE 100
1770   IMAGE 1#.3#,3X,2#.4#,3X,1#.2#,3X,1#.4#,3X,2#.4#,3X,1#.4#,3X,1#.2#,3X,1#
       .3#,3X,1#.2#
1780   REM
1790   REM                    DEPTH/DISCHARGE TABLE
1800   REM
1810   GOSUB 2240:FLG1=1:FLG2=1:FLG3=1:IF FLG4=1 THEN PRINT CHR$(14):GOSUB 620
       :PRINT CHR$(15)
1820   XYZ=2:YL=Y1:QL=Q:FLG2=2:FLG4=0:HOME:GOSUB 2070
1830   LO=((INT(Y1*100))/100)+.02
1840   FOR Y1=.1 TO LO STEP .01
1850     GOSUB 840:IF CC=5 THEN PRINT:CC=0
1860     PRINT USING"1#.3#,5X,2#.4#";Y1,Q:CC=CC+1
1870     NEXT
1880   CLOSE:CC=0:Y1=YL:Q=QL:PRINT:PRINT
1890   VPOS=23:HPOS=50:INPUT"PRESS RETURN TO CONT.  ";A$
1900   IF A$<>"" THEN 1890:ELSE 100
1910   REM
1920   REM                    DISCHARGE/DEPTH TABLE
1930   REM
1940   GOSUB 2240:FLG1=1:FLG2=1:FLG3=1:IF FLG4=1 THEN PRINT CHR$(14):GOSUB 620
       :PRINT CHR$(15)
1950   XYZ=3:FLG3=2:YL=Y1:QL=Q:FLG4=0:HOME:GOSUB 2070
1960   IF Q<=1 THEN QS=.01:ELSE QS=.1
1970   FOR Q=QS TO QL+QS STEP QS
1980     GOSUB 620:IF CC=5 THEN PRINT:CC=0
1990     PRINT USING"2#.2#,4X,1#.3#";Q,Y1:CC=CC+1
2000     NEXT
2010   CLOSE:CC=0:Q=QL:Y1=YL:PRINT:PRINT
2020   VPOS=23:HPOS=50:INPUT"PRESS RETURN TO CONT.  ";A$
2030   IF A$<>"" THEN 2020:ELSE 100
2040   REM
2050   REM                        PRINT HEADING SUB.
2060   REM
2070   PRINT"FLUME DIMENSIONAL DATA (M) :":PRINT
2080   PRINT"   SILL LENGTH =  ";L3:PRINT"   SILL HEIGHT =  ";Y8
2090   PRINT SPC(35);"B1       Z1      B3      L2"
2100   PRINT USING"33X,2#.2#,5X,1#.1#,3X,2#.2#,3X,2#.2#";B1,Z1,B3,L2
2110   PRINT:PRINT
2120   ON XYZ GOTO 2130,2150,2160
2130   PRINT"  Y1        Q       YC     FR. #     IDEAL     DISC            ALF"
2140   PRINT"  M       M3/S      M      AT Y       Q        COF      V1     3
```


30

```
        V3":PRINT USING 2170;:RETURN
2150    PRINT"    Y1        Q":PRINT"    M       M3/S":PRINT USING 2180;:RETURN
2160    PRINT"     Q         Y1":PRINT"  M3/S        M":PRINT USING 2180;:RETURN
2170    IMAGE 73"-"
2180    IMAGE 17"-"
2190    REM                     VOLUMN CALCULATIONS  SUB.
2200    REM
2210    IF TTT=1 THEN V=(B1+B3)*(9+((2*L3)/Y8))*(Y8^2)/4:ELSE V=((B1+B3)*((2*L3
        )+(3*Y8)))*Y8/4
2220    PRINT:PRINT USING"32A,3X,3#.2#,3X,3A";"VOLUMN OF STRUCTURE = ",V,"M3"
2230    PRINT:PRINT:RETURN
2240    VPOS=23:INPUT"List to P)rinter or C)onsole  ?   ";A$
2250    IF A$<>"P" AND A$<>"C" THEN 2240
2260    IF A$="P" THEN OPEN#1,".SILENTYPE":OUTPUT#1
2270    RETURN
2280    REM
2290    REM                      CONSTANTS & FUNCTIONS
2300    REM
2310    D1=0:D2=1:D3=2:D4=3:D5=.5:D6=.0001:D7=.001:D8=1.77:D9=1.5:F2=.025:F3=.0
        5:F4=1.5:F5=1.04:F6=350000:F7=1.328:F8=5/8:F9=.00235:J1=.005:J2=.544:J3
        =.638:J4=4.82:J5=.00001:J6=5.61:J7=4:J8=1/3:J9=.15
2320    DEF FN E(X)=(B1+Z1*X)*X:DEF FN T(X)=B1+2*Z1*X:DEF FN N(X)=B3+2*Z1*X:DEF
         FN C(X)=(B3+Z1*X)*X:DEF FN P(X)=B1+2*X*(1+Z1*Z1)^.5:DEF FN O(X)=B3+2*X
        *(1+Z1*Z1)^.5
2330    READ K:REM        Constant for absolute roughness
2340    DATA .00025
2350    READ L1:REM       Distance from point of measure to transition sec.
2360    DATA 1
2370    READ G:REM        Constant for gravity
2380    DATA 9.803
2390    READ V1:REM       Constant for viscosity
2400    DATA 1.1408E-06
2410    RETURN
```

AUTHOR

William C. Bell has been a member of a Louis Berger International, Inc. advisory team at the Lam Nam Oon Integrated Rural Development Project in Changwat Sakon Nakhon, Thailand since October, 1979.

He is assigned as an Irrigation Systems and On-Farm Water Management Engineer. As such, he has assisted in installing a number of water management innovations at Lam Nam Oon including the broadcrested weir described in this paper.

He is a member of the American Society of Agricultural Engineers. He is a graduate of North Dakota State University and the University of Idaho with degrees in Agricultural Engineering.

He has worked in the United States as a supervisory hydraulic engineer with the U.S. Bureau of Reclamation, and abroad in Brazil, Indonesia, and, currently Thailand.

Mr. Bell's other papers published at Lam Nam Oon to date (March 1983) include:

- Hand Book, Channel Design, With Tables, for Varying Size Quaternary Canals Specific to Conditions at Lam Nam Oon.
- Project Note No. 2 Lam Nam Oon Preliminary Water Space and Integrated Rural Development Planning.
- Project Note No. 4 Dry Season Crop Production - 1981/82 - Lam Nam Oon.

- Project Note No. 5 Pilot Area 2 Operations Research Results - 1981/82 - Lam Nam Oon (in collaboration with Anthony Zola).

- Project Planning Note No. 7 Micro-computer based irrigation system management - Lam Nam Oon.