PN-AAF-825
493027 2
ISN = 38218

TECHINCAL NOTE NO. 1

GUIDELINES FOR TERTIARY IRRIGATION SYSTEM DEVELOPMENT

at

LAM NAM OON

SAKON NAKHON
THAILAND

AUGUST 1980

LOUIS BERGER INTERNATIONAL, INC. U. S. A.

6th FLOOR, NO. 5, PATPONG 2 ROAD
P.O. BOX 11-1369, BANGKOK 11, THAILAND

PN-AAR-825
4930272
ISN 38218

TECHNICAL NOTE

NO. 1

GUIDELINES FOR TERTIARY IRRIGATION SYSTEM DEVELOPMENT

- LAM NAM OON -

SAKON NAKON, THAILAND

AUGUST 1980

ISSUED BY

CENTER FOR RURAL DEVELOPMENT

LOUIS BERGER INTERNATIONAL, INC., U.S.A.

UNDER CONTRACT WITH MINISTRY OF

AGRICULTURE AND COOPERATIVES OF THE

KINGDOM OF THAILAND

Work Performed By

ERROLL D. COLES

FOREWORD

The Center For Rural Development, which is a Division of the Berger Group of companies, assists clients in planning and implementing programs and projects aimed to expand economic opportunities and improve the well-being of rural populations in many parts of the world.

Currently, in 1980, the Center supports eight major rural development projects which are funded by the World Bank, the U.S. Agency For International Development, The Asian Development Bank, and other international agencies in Asia, Africa, the Middle East, and Latin America.

As a part of its services to clients and the professional community of those engaged in rural development work, the Center releases technical notes on various aspects of individual projects. The notes are numbered by reference to the individual projects.

For those interested, additional copies may be obtained from the Center For Rural Development, c/o Louis Berger International, Inc., 100 Halsted Street, East Orange, New Jersey 07019, U.S.A.

I N D E X

PART I - BACKGROUND AND IMPORTANCE

A. Introduction.

B. Special Irrigation-Related Factors at Lam Nam Oon (LNO)

C. Project Pilot Area 3 Layout Design at LNO - And The Special Factors.

D. General Layout Design Criteria - And The Special Factors at LNO.

E. Layout Design and Water Control at LNO.

F. Layout Design and Operations - Maintenance at LNO.

G. Layout Design and Water Users Organizations.

H. A Tertiary System for LNO.

I. The Tertiary System Layout - and Water Management.

PART II - DESIGN CRITERIA FOR TERTIARY SYSTEMS AT LNO.

A. Basic Purpose of Tertiary Development at LNO.

B. The Principles of the Tertiary System - For LNO.

1. Tertiary System Defined

2. Tertiary Layouts

a. Type I

b. Type II

c. Type III

d. Compromise Type Systems For LNO.

3. Recommended Tertiary Layouts For LNO.

4. Water Division Boxes

5. Tertiary Canals

6. Tertiary Drains

PART II - (Cont'd)

C. Tertiary Layout Criteria.

1. Physical Features

2. Unit Size

3. Canal Lengths

4. Canal to Drain Distance

5. Structures

6. Multiple Channels

7. Roads

8. Land Used For Services

PART III - THE DESIGN METHODOLOGY FOR TERTIARY AND QUATERNARY UNITS

A. Introduction

B. Maps And Plans

1. Aerial Photo Mapping

a. Controlled Mosaics

b. Cadastral Detail

c. Topographic Detail

d. Common Errors in Mapping

2. Design Drawings

a. The Base Map

b. Base Map Preparation

c. Detailed Design Drawings

3. Preliminary Tertiary Design Procedures

4. Final Drawings

C. Detail Layout Design Of Tertiary Units

1. General Layout Principles

2. Layout Design Criteria

3. Detailed Layout Procedures

4. The First Step

5. The Second Step

D. Design of Quaternary Canals

1. Structures

2. Division Box Water Levels

3. Critical Field Levels

4. Calculation Procedure

E. Detailed Design of Tertiary Canals

1. Longitudinal Profiles

2. Canal Capacities

3. Profiles And Sections

4. Cross Sections

F. Detailed Design of Tertiary Drains

1. Tertiary Drains

2. Cross Sections

G. An Outline Of The Design Of Tertiary Structures

1. Division Boxes

Table No. 1
" " 1a
" " 2
" " 3
" " 3a
" " 4

APPENDIX 1 - The Principles Of The Rotational Water Regulation System.

APPENDIX 2 - Methods For Calculating Flow In Channels.

APPENDIX 3 - Types Of Division Boxes.

APPENDIX 4 - Canal And Drain Capacities.

Handbook on Channel Design with Tables For Varying Size Quaternary Canals (Separate Volume)

NOMENCLATURE

Author

TECHNICAL NOTE

NO. 1

PART I

BACKGROUND AND IMPORTANCE

OF

GUIDELINES

FOR

TERTIARY IRRIGATION SYSTEM

AT LAM NAM OON

A. Introduction

The Lam Nam Oon Integrated Rural Development Project is located in amphoes* Phang Kone, Pannanikom, and Muang, Changwat Sakon Nakon, Thailand. It comprises a dam, reservoir, and main-secondary canal system that will provide irrigation water to approximately 220,000 rai* of small farm holdings. About 10,000 farmers reside in the area.

Begun thirteen years ago, the infrastructure parts of the project are now almost completed. In order to develop efficient on-farm water delivery systems and water/farm management practices in the area, The Royal Thai Government has programmed US$43,800,000 for special work in the area during a five-year interval.

Of this amount, US$4,500,000 comprises funds borrowed from the United States of America in order to finance technical assistance, equipment, and local development costs.

Starting October 12, 1979 the American consulting firm, Louis Berger International, Inc. was employed under contract to provide technical advisory services for the project. These advisory services are for the cooperating agencies comprising: The Ministry of Agriculture And Cooperatives; Royal Irrigation Department (R.I.D.), Community Development Department (C.D), Department of Agriculture (D.A.) and Department of Agricultural Extension (D.O.A.E).

The contractor is tasked with responsibility for designing and testing on-farm water delivery systems in the Lam Nam Oon (LNO) area. In relation to this, when contractor engineering specialists arrived at Lam Nam Oon in November 1979, the Royal Irrigation Department (R.I.D)

* Administrative Sub-Districts of a Changwat (Province)
* Rai = 0.16 Hectare (0.40 Acre)

had already installed a Land Consolidation-related on-farm water delivery system in pilot areas 1 and 3. Nothing had been done about designing and testing a system related to Ditch-Dyke modes of distributing water to farm units.

This situation caused the Louis Berger consultants to push for selection of a pilot area 2 location as rapidly as possible. A selection of area was made in April, 1980; and Mr. Erroll Coles, as Water Management, Operations and Maintenance Engineer was asked to develop the technical guidelines for the design of three systems for pilot area 2.

B. Special Irrigation-Related Factors at Lam Nam Oon

There are a number of special factors which exert a specific influence on irrigation in LNO. They impact particularly on the selection at LNO of layouts needed to equitably distribute irrigation water to farm units.

The layouts selected should in general fulfill certain objectives; namely, to guarantee a flow of water in the right quantities at the right time throughout the chosen growing seasons. In order to comply with this the system must be manageable; maintenance should be minimal and the system should be environmentally compatable. These objectives should be achieved at a minimal cost. It should be noted that in all systems anywhere over-design will only lead to higher costs and complicate management. Over-design can also cause excessive maintenance requirements that over-strain financial resources. Equally, under-design can lead to management difficulties and inadequate water control.

The special factors discussed here include:

- Irrigation-Related Laws
- Soils
- Topography
- Drainage
- Forest Preservation

Statutory law governing irrigation development and distribution systems in Thailand include the Field Dyke and Ditch Act, B.E. 2484 (1941) and the Agricultural Land Consolidation Act B.E. 2517 (1974). The first of these Acts was adopted nearly 40 years ago; it has been amended in recent years. It's contents affect what can be done at LNO in a very definite way. The

distribution systems envisaged under that Act do not meet the requirements mentioned above of supplying water equitably nor do they provide for proper control over water allocations to individual farm units. The Field Dyke and Ditch Act systems do provide for water distribution in areas of intermittant irrigation in the wet season. Considering the limitations of this Act, it should not be applied to high-cost projects such as LNO without some necessary changes. Those changes should include the provision for more adequate water regulation and access roads as well as limited adjustment of-farm boundaries to accommodate canal alignment.

There is also a provision that if up to 70% of the farms have individual turnouts then the 70% rule can be applied to all without realignment of all units. Given this 70% provision it is, therefore, important to study alternative layouts for LNO which are more advantageous, less costly and provide for more equitable water distribution.

The second Act, the Agricultural Land Consolidation Act was adopted in 1974. It embodies all the requirements for proper land consolidation including provision of services and proper water management provided the layouts are suited to the environment. It includes facilities to efficiently regulate water.

Any critical comment upon this Act must begin with the observation that it presumes that all farm plot boundaries shall be moved, viz Section 38. Yet in a situation such as at LNO this may not be efficient. Certainly, fragmented land holdings should be consolidated into economic units; but in many local circumstances such as at LNO it may be sufficient to only realign some farm boundaries, rather than realigning the whole farm unit particularly where environmental factors

are involved and where costs can be significantly reduced and water control can be enhanced.

Another critical comment concerns the Act's limit on acquisition of land for irrigation services. The Act restricts acquisition to seven percent of the gross area of each farm holding. This seems to indicate that the amount of land that can be acquired presumes that all farm units will be realigned now. Yet there may be cases where it would be less costly and more advantageous to only change a few boundaries.

Another aspect of this Act concerns it's failure to deal with servitudes. It seems obvious that there may be occasions at LNO where servitudes for conveying water onto a land holding and draining water off or to provide access across another land holding may be advantageous. However, such a remedy cannot be applied under the present Act.

There are also three environmental factors affecting the LNO area. These are soils, topography, and drainage.

The soils of the LNO part of Sakon Nakon differ from other Northeastern Provinces. There is a predominance of soils on the low and middle terrace systems of relatively recent origin, markedly sandy and of very low fertility. These soils are essentially of alluvial origin being sediments of variable age and composition. These alluvial sediments have been eroded in successive cycles. At present, four main levels are recognized*. They are the high terraces, middle terraces, low terraces and the alluvial plains. This has produced a distinctive landform of low undulating to rolling relief common to

---

* Soil of Northeast Thailand, Land Department, Soil Survey Div. MSR 9, 1964.

the project area. Soil morphology is closely correlated to this topographic system.

The predominant soil is the Roi Et series, mainly located on the low terraces. This soil is characterized by a light grey fine loamy sand over a more clayey compacted sandy loam sub-soil and laterite may occur below 0.5 metres. The organic matter content is very low. The cation exchange capacity is low and the pH is low too. The physical properties of this soil are not indicative of a soil suitable for irrigated non-rice crop production without high agricultural inputs and expert management.

The Korat series are next in magnitude. They occur on the upper part of the middle terraces. These soils consists of a light grey medium textured sandy loam over a yellow brown moderately structured sandy loam (or clay loam) sub-soil. The fertility of this series is also very low and the physical properties are not ideal.

The remaining area is made up of eleven other soil series of varying nature occupying the lower parts of low terraces and along the natural drainage ways. These soils tend to be of a heavier texture and with a more pronounced structure. Their inherent fertility is a little better than that of the two main soil series.

The nature and properties of these LNO soils differ greatly from other areas in Thailand where irrigation is being successfully practiced using a specific layout configuration for land consolidation, notably in the Chao Phraya area. The other soils are inherently more fertile, physically suited to irrigated agricultural practices and deeper; the macro-topography is of an even relief with low gradients.*

---

* Characteristics and classification of Paddy Soils in the Chao Phraya Delta, Thailand. P. Vijarnsorn and S. Panichapong. Soil Survey Division FSR - 221.

By contrast to LNO, irrigation development and land consolidation can be accomplished in such soils with a limited amount of land forming and the relocation of farm units can be achieved without undue disturbance of the soil surface and the destruction of fertile top soil. Channels need not be deeply incised and with the flatter gradients fewer regulating structures are needed. Irrigation development is less costly in such localities.

Consideration must be given to the fact that in flat plains regions, with stable fertile soils, straight evenly spaced canals and drains and regular farm units can be designed with alacrity, using rather limited criteria. However, applying this approach in areas of high relief such in the undulating, rolling topography of the LNO area is very risky. Because of this particular landform and because the LNO soils are very unstable, they contain very little clay and are non-cohesive, behaving like a fluid when saturated. The fine particle fractions are obviously very fine quartz particles and not clay; the clay fraction is mainly kaolinitic. Maintaining long straight unlined canals, much of it fill, in such soils will be costly. Also, in order to reduce erosion very flat channel slopes are needed therefore more regulating structures will be needed too. Sections in fill should be lined. Earthworks of this kind are costly to construct and the main capital costs will be very high.

The landform features of the Lam Nam Oon area which is a low terraced form, indicates that there is an intricate but poorly defined drainage pattern between the raised terraces and the flat flood plains. The drainage lines are not well-defined and drainage channels that exist are rather shallow tending to meander across the flood plains eventually collecting in the primary drainage system. It is dominated by the

main river, the Maekong, and backflooding of this large river during the wet season obviously influences the flow in the major rivers draining this area, notably the Huai Pla Hang and the Nam Oon rivers. Because of this, careful consideration must also be given to the timely and sequential development of the main drainage system before any layout designs proceed because the minor drains have to be directly "tied" into the main drainage system. Failure to observe this elementary fact can only lead to excessive flooding and loss of confidence in R.I.D. among the farmers.

Finally, there is an additional factor that should be stressed in irrigation layout design at LNO. Trees in the LNO area require a long time to grow. Therefore irrigation layouts should seek to preserve as many trees as possible. Indiscriminate clearing of trees in the course of construction will ultimately lead to a grave shortage of wood for making charcoal used for domestic cooking and for building timber. Thailand is experiencing an acute shortage of cooking fuel and building material now. This situation will become acutely critical in time. At present, there is no technical justification to remove trees unnecessarily. Farm mechanization is still a distant objective in the LNO area and when or if it occurs then those remaining trees obstructing mechanical cultivation can be removed leaving trees that do not cause obstructions to be used beneficially.

C. Project Pilot Area "3" Layout Design at LNO - And The Special Factors

The kind of irrigation system and layout installed on 3,000 rai in Pilot Area No. 3 during 1979/80 explicitly termed "Intensive" development does not deal satisfactorily with the conditions outlined above.

This system was initially developed for the Chao Phraya plain region, an area of low topography, alluvial soils of greater fertility and a population more familiar with irrigation, water management and technology. The unsatisfactory aspects of this system as applied to Lam Nam Oon arises from the high, undulating topography occurring in many parts of the project requiring extensive land levelling which increases costs per unit area; the fragile soil infertility which will require high levels of agricultural inputs and very skillful management to maintain moderate crop returns; the inexperience of the farming population with irrigation which necessitates an efficient, yet simple, water management system at the farm level.

Not least, a layout is needed which does not threaten the ecosystem. This must be done particularly in relation to soils and forest resources. Consideration must be given to the fact that wood for house building and for fuel should not be destroyed indiscriminately. The soils of the project area are very infertile. They consist of soils found throughout the humid tropics, and they are known for their complexity in management. Excessive deep cutting of these soils by means of landscaping should be avoided. Even with wet paddy, reduction of yields are inevitable on the poor subsoils.

The present system at Pilot Area 3 also applies the "sequential" method of water regulation. This method is sometimes confused with

the rotational method. The "sequential" method consists of "checking" the water by means of a series of check structures along a canal with farm outlets set in the canal between each check. In operation, a gate at the check is closed, the water level rises up over the farm outlets and water flows into the farm unit for the required period of time then the gate is opened and the process repeated at the next check. Though this system does offer positive control of the water supply/of exact rotational regulation cannot be practiced except at the secondary canal. This system is adapted to very low topography and on steeper areas excessive cut and fill is needed to construct the canals, bearing in mind that the canals gradients must be fairly flat to provide an even head of water over the farm outlets thus providing an equal flow into each farm unit. The steeper the land the closer the check/drop structures have to be to maintain an even cut-and-fill of the canal sections. On steep land the canal has to be raised up to allow water to flow into farm units or this may require that field levels be "cut down" to level to allow water to flow into the fields. Both procedures involve costly earth moving. The "sequential method" is ideally suited to estate-type management procedures where gate operation and timing can be accurately controlled and supervised.

In steeper topography paddy fields have been terraced over a long period of time, each field levelled to within five to ten centimetres and this constitutes a laborious investment; while in very flat plains areas a minimum of terracing is required and bunding* a simple process of construction. The "sequential system" does require considerable modification of fields and farm boundaries. Though in very flat areas the investment in terracing is small, modification may even be of great advantage to the farmer, in steep topography complete modification is very costly.

* banks between paddy fields.

D. General Layout Design Criteria - And The Special Factors at LNO

Any satisfactory irrigation field layout selected for LNO must provide for two basic criteria, whether it be for the Land Consolidation areas or for the Dyke and Ditch development, namely:

i. a maximum area of land should benefit materially from water deliveries, and,

ii. a sustained, assured and equitable supplying of water should reach each farm unit.

In order to comply with the relative statutory acts and apply the two basic requirements to the system layout, within the limitations of the existing environmental situation of the project area, the following comprises general criteria for a satisfactory layout design:

i. Water should be able to be shut-off at the supply point to the farm unit.

i. Provide for rotational water regulation,

(a) at the higher level in the early stages of project development.

(b) at a lower level later when farm level management has gained experience.

iii. Fit into the existing land use patterns without destroying existing paddy layouts.

iv. Require a minimum of farm boundary realignment or a minimum of reparcelation.

v. The farmer group organizations should be based on land units rather than village or single canal groupings (sub-grouping may be based on a single canal).

vi. Provide for the minimum number of control structures.

vii. Lower farm grouping areas should not exceed 125 to 150 rai (20-25-ha.)

viii. The nature and properties of the very fine sandy soils will limit canal capacities, velocities and lengths.

xi. Land levelling should be severely limited because of the infertility of the soils and the characteristics of the soil profile of the soils occurring throughout the project area.

x. The clearing of forests and trees should be limited.

xi. Survey procedures should be revised to provide closer control to take into account the fast changing land form detail and other topographic features of the project landscape.

E. Layout Design and Water Control at LNO

Statistics show that on many major irrigation projects in various parts of the world only 40% of the water ever reaches the farmer. The prime causes for this situation are mainly improper project operation, low level of maintenance and inadequate management of water supplies. Summed up these include specifically:

i. Either underdesign or overdesign such as over-elaborate farm unit layouts or insufficient turnout regulators and measuring units or complicated regulators.

ii. Inappropriate equipment that cannot be properly operated.

iii. Lack of adequate maintenance.

iv. Inadequate drainage (improperly designed drains and no provision for drainage downstream).

v. Lack of operational and managerial procedures.

Two principal elements affect the foregoing. One concerns the physical aspects of design as these relate to system and on-farm layouts. The other concerns management by project personnel, farmers, other Government Departments, etc. In the physical instance, the quantity of water allocated to the system at any one point in time is a function of the capacity to control irrigation water and this is, in turn, a function of the physical control components such as gates, measuring devices, cross regulators, canal lining, etc.

Certain obvious conclusions flow from this. The number of outlets should be limited in number. Farm channels should be approximately the same length and kept as short as possible and the number

of farm units should be of the same number along each channel. It is easier to control water along the primary and secondary canals than at minor levels where water regulation is less accurate. Cross channel control providing a constant head over outlets is preferred to fluctuating regulation. This provides for stable outflow, quicker response to adjustments of the outflow, easier regulation, and water is always available.

This point is particularly demonstrable at the Lam Nam Oon project because maintenance of the canals could be considerably reduced by having a constant water level in the canals. This relates to the earlier observation about soils of the area which behave like a fluid when saturated. Now, when canal water levels are raised and lowered the soils flow into the canals through cracks in the lining. Also, rain run off from along the canal verges and from the roads sluice the saturated soil into cavities behind the lining and this runs out of the cracks into canals carrying more eroded soil. Back pressures cause the canal linings to crack when the water level is rapidly drawn down and the saturated soil flows into the canal. Maintaining the water level at the highest level at all times would reduce this serious problem. However, certain system modifications would be required at LNO to maintain those water levels.

Related to the foregoing, there is also the crucial point that the kind of farm unit layout adopted should correspond to the water management objectives contemplated. Such objectives should include:

i. Proper planning of water allocation based on crop water requirements for the current cropping plans.

ii. Daily preferably, but not more than weekly, water allocation based on the various stages of growth of

the crop.

iii. Water allocations adjusted to include effective rainfall, on a weekly basis.

iv. System maintenance both at the major and minor level. (Over-elaborate layouts, long canals, excessive number of control structures and large farm unit groups, leading to large volumes of water diverted and large channel cross sections, will all impose greater maintenance requirements and higher costs).

The second element of importance is that of management. Here again, the quantity of water supply is a function of how the control capacity is utilized and this is a function of the social technology of rules, of routines and of roles through which the system is managed. The response of personnel at different administrative levels within the project hierarchyto the social technological factors and of other groups such as agricultural extension, community development and similar essential groups also influence water allocations. Thus, ease of management should figure significantly in the design of layouts.

This can be observed in another way by looking at the managerial implications of:

i. Operating staff requirements. (This should include availability of personnel and the training they will require and the quality of training they will receive. If staff recruitment is going to be a problem then a less labor - intensive system will be required; if good

farmer cooperation is not anticipated then a simple, non-labor intensive minor level system will be indicated and so on.)

ii. Extension Services. (These are essential for successful irrigated agriculture; thus without extension workers in both agriculture and on-farm water management elaborate layouts and systems will not function).

iii. Cost/Effectiveness Trade Offs. (It goes without saying that over-elaboration will cost more to operate and maintain, yet under-designing will cost even more. Consequently there is a threshhold level where costs are at a minimum for the efficiency desired).

F. Layout Design And Operations - Maintenance at LNO

Water management is a complex interrelationship between a project hierarchy and the farming community in which the project is committed to provide water. On the other hand, farmers are not so committed and until there is some degree of commitment on their part a project will not function properly. Therefore, an effective and efficient organization will be required at project level. Such an organization has to be created and maintained. This centers around the double "O & M" components of Operation and Maintenance and Organization and Management.

(1) At Project Level

Operations by the Project personnel consist of:

i. The regulation of water into the main canals, the distribution into the secondary canals and diverting water into the minor systems.

ii. Gathering and analyzing cropping data, climatic data and other relevant data.

iii. Recording and checking water deliveries and farmer feedback on such deliveries.

The Maintenance work consist of:

i. Keeping all mechanical equipment, gates etc. in working order.

ii. Canals free of sediment and lining in a good state of repair.

iii. Roads in good order.

iv. The timely repair of breaches in the canals and repairs of structures.

(2) At the Farm Level

Operation by the farmer's representative consists of:

i. opening and closing gates and allowing water to flow into the farm units.

Maintenance consists of:

i. organizing the farmers to assist in cleaning out the canals seasonally and repairing damaged structures.

The foregoing outlines those items concerned with project Operation and Maintenance. It may be realized from this short listing, that sophisticated and elaborate layouts will complicate matters rather than alleviate the management situation. The greater the number of individual man-operated components and the longer the aggregate length of the canals the more complex the operational procedures become. The length factor and number of wearable items influence maintenance requirements. In consequence, designs should be adapted to the local situation, to the environmental complex of topography, soils, climate and people.

G. Layout Design And Water Users Organizations

The farming community is also highly involved in water management. Farmers are the beneficiaries and they must play a constructive part in properly using the water supplied. They must contribute to the collective management of a project. Farmers the world over have certain qualities which must be recognized; they are fiercely independent; they have to contend with the natural elements over which they have no control; and they are "risk-obviators". With these factors in mind, one crucial problem is how to organize farmers to manage the water-user end of projects. The advantage of organization is not always apparent to farmers but it does provide them with organized contact and association with the project management. It also provides them with means of bargaining with the upper level management.

Obtaining the organized cooperation of farmers depends in part on how the layouts are designed and water controlled. It must be proven to farmers that water can be so controlled that it will be delivered when and where the farmer wants it. A proven, guaranteed flow of water in the right quantities and at the right time is the best method that exists to encourage farmers to cooperate in organizing themselves to use water advantageously and to maintain the field channels and to grow crops regularly.

To comply with this dictum irrigation systems have to be designed with farmer water needs and understanding in mind. Specifically, the design of the layout must be adapted to the purpose of the irrigation requirements, and those must be understood by farmers. This applies to all systems including, continuous irrigation throughout the year

(meaning a continuous cropping program), or supplementary irrigation for early planting at the beginning of the wet season or to supplement dry season cropping. In any case, at the onset of project development the mechanisms for formation of irrigation organizations should be introduced as soon as possible. At the same time, physical provision for the handling of water at the farm level must be simplified as much as possible. Farmers must be taught the principles of water uses, while simple, robust, structures which are easily managed should characterize the farm unit layouts.

The efficiency of water use, that is the ratio of water required by the crop to the total water supplied plus the effective rainfall, will center around the efficient management at different levels, but particularly at the farm level. There are many technical factors that enter into this equation from cultural practices such as size of paddies, bund width and height (on-farm and in-field factors); design factors such as canal length and size, the kind and size of structures, size of farm units, etc. A critical measure of all this will be the number of units of crop produced to total volume of water diverted through the cooperation of farmers in User's Associations.

H. A Tertiary System For LNO

These guidelines prescribe a Tertiary System as best qualified to satisfactorily meet the conditions prescribed in the foregoing sections. This system is flexible. It can be adapted to the LNO project environment, the landforms, the existing land use patterns and the soils without excessive disturbance.

A Tertiary System is defined as concerning that part of an irrigation project onto which water is diverted from secondary turnouts and distributed amongst farm units. The major system, consisting of the head works, the Primary and Secondary canals (or the conveyance system) is normally operated and maintained by the project organization. The minor system consists of Tertiary and Quaternary canals, operated by a representative nominated by the farmers (or farmers organization) who are also responsible for the maintenance of the canals and structures within what are called the Tertiary Unit.

Tertiary Units are limited in size and consist of a number of pairs of smaller quaternary units, the tertiary unit may be based on a village boundary (though there may be more than one tertiary unit to a village area) provided the canal system does not extend beyond the village boundary or local district boundaries or the unit may coincide with a natural basin area, or it may be bound by physical boundaries such as roads, canals or drains.

The Tertiary Unit forms the basis of the water management system and this contributes to using the tertiary system as a means of irrigation development.

The Tertiary Unit is divided into pairs of Quaternary Units each of about equal area. The area of each unit should be from 60 to 125 rai, composed of any number of individual farm units. The Tertiary

Units, then the Quaternary Units facilitate "equal time" rotational water supplies at the tertiary level and at the quaternary level. This allows for equitable supplies of water to reach each farm unit even in times of water shortage or for irrigating other crops other than wet paddy.

The water supply to the Tertiary Unit is regulated and measured at the turnout from the secondary canal. From the turnout the water flows along the tertiary canal to a division box, either, by dividing the tertiary canal into sub-tertiaries or into the quaternary canals. In the first case, the box is referred to as the tertiary division box and in the second the quaternary division box. These boxes also act as measuring devices. The quaternary canal may be sub-divided but this should be obviated wherever possible. The division box is the salient part of the tertiary system being the basis for proper water allocation to farm unit groups.

The farm unit consists of one or more paddy fields and water is supplied to the unit from the quaternary canal, the farm turnout being one or more small diameter pipes , so located to supply water to the highest paddy on the farm unit. The outflow through the pipe is regulated by raising the water level in the canal over the pipe by means of a check gate.

Surplus irrigation water and stormwater drain into the tertiary drains which in turn drain into secondary drains and finally discharges into the primary drains or river system.

I. Tertiary System Layout - And Water Management

Applying the tertiary system to the LNO area is affected by the following:

i. The size of the unit area chosen should be limited by the volume of water required to be delivered. This is related to the soil properties of the area. Coarse-textured soils (sandy soils) will require smaller units while fine-textured soils (clays) will support larger units (also, channels in sandy soils should be shorter and longer on clayey soils). The optimum size of a tertiary unit is about 150 ha. or about 950 rai.

ii. The size of the canals and structures (regulators, gates, drops and culverts) should be kept within sensible limits by using specific determinations of crop water requirements and the soil characteristics to estimate capacities.

iii. The area of land used for services which include access and farm services roads, canals and drains should be directly proportional to the size of the canal plus the road width and height above field level. The size of these services should be directly related to soil texture. Optimum size occur in the median range (that of stable soils). However, the area used for these services should not exceed six to seven percent.

iv. Land levelling is beneficial for proper water spreading over a paddy field. The amount of land levelling will depend on the critical field level (the highest field level in any group of fields) and the water surface level in any group of fields and the water surface level in the canal needed to service that field. Where it may be necessary to raise the canal bed level too high above ground-level then an economic ratio has to be considered between levelling the group of fields and constructing the canal in fill. The design requirements of the tertiary unit concept does reduce the amount of land levelling required because of the flexibility of canal and drain location and the relation of the field levels to the invert levels of the water regulators.

v. Extensive studies have shown that farm units along field channels should be grouped together into larger units. This approach allows grouping of farmers in a way which provides for a more efficient administrative organization and with fewer officials. The tertiary system with the lower level quaternary units (or blocks) provides such a grouped arrangement and this will contribute to efficient maintenance and water control.

vi. Efficient use of a limited supply of water depends to a great extent on the method of distribution and allocation. The method of regulation that has proved most efficient for conditions prevailing on most irrigation projects is the rotational method. The type of rotational supply method envisaged is the equal time rotation with the division of water limited to simple fixed ratios or open and shut type control rather than variable control with variable ratios. This last form would be too costly and difficult to manage under LNO conditions. The great advantage of the tertiary system is that water apportionment can be accurately and fairly controlled down to at least a quarter of the nominal allocation and the control interval can be very small. This can range from as little as a twelfth of a day (control interval is the time taken to initiate water supplies) in unlined canals. Control intervals vary with the soil texture and the moisture conditions in the surrounding areas. The tertiary system has been developed around the rotational supply method. However, a form of rotational supply can be practiced at a higher level along the secondary turnouts in the early stages of the irrigation development until the farmer operators are trained and become acquainted with the system and procedures.

TECHNICAL NOTE

NO. 1

PART II

GUIDELINES FOR TERTIARY DEVELOPMENT

DESIGN CRITERIA FOR TERTIARY SYSTEMS

A. Basic Purpose of Tertiary Development - At LNO

Basic principles of such a system and related criteria are detailed below for use as a practical guide for the design of Tertiary and Quaternary Units within the Lam Nam Oon Project area. They are tentative at this time, and they will be modified as more information comes to hand.

The basic purposes of the tertiary system is to provide for the two-fold objective of a less costly distribution net-work within the farming unit groups adapted to the prevailing environmental conditions; and a effective system for the efficient management of proper water allocations to the farm units including,

1) Provision for the equitable distribution of water within the project area to every farmer,
2) Provision for the most efficient system at the least cost,
3) Provision water for crop production over the entire annual growing season and,
4) Provision for simplicity of maintenance to ensure continuity of the water supplies.

Figure 0 provides the general outline of this system.

Figure 0

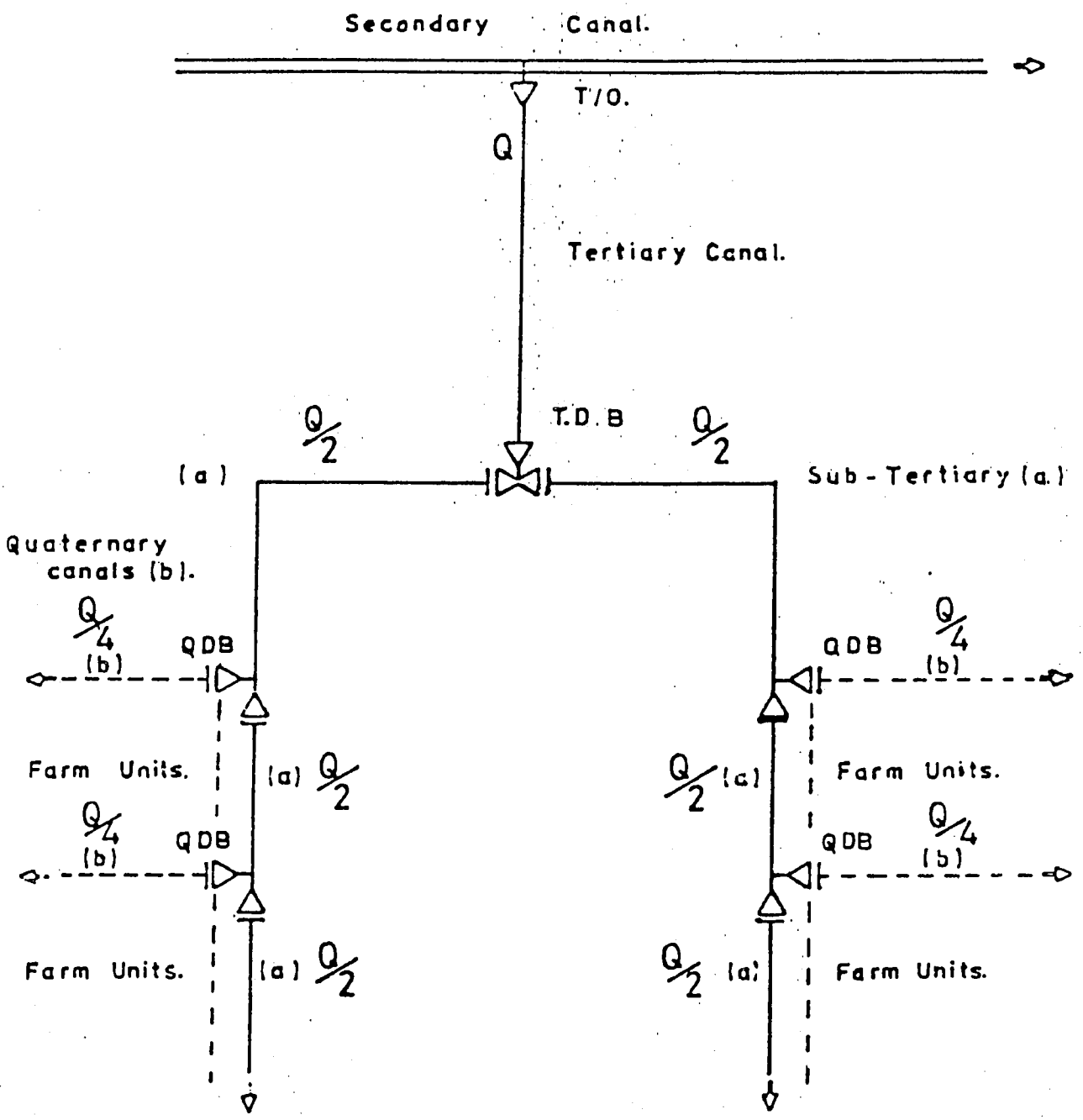

T/O. Tertiary turnout.
TDB. Tertiary division box.
QDB. Quaternary division box.
Q Canal capacity.

Note that only qaatenary are accessable to farmers and deliver water to the farmers.

Schematic Diagram of the Tertiary and Quaternary Water Delivery System.

B. The Principles of the Tertiary System - For LNO

1. The Tertiary System Defined

The Tertiary Unit forms the basis of the water management system and the tertiary unit is sub-divided into the quaternary units. Each tertiary unit (or block) consist of a number of pairs of quaternary units.

The operation and maintenance of the Tertiary Unit is usually conducted under the auspices of a farmer's or water user's association by an elected representative of the farmers.

Water is diverted into the tertiary canals from the secondary canals and this turnout gate is controlled by the project personnel. Water in the tertiary canal flows into division boxes and into the quaternary canals from which water is diverted into the farm unit through a simple small diameter pipe outlet of sufficient capacity. This regulation is supervised by a farmer appointed by the farmer's association.

2. Tertiary Layouts

Tertiary layouts can be classified by the lowest level at which channel division takes place, the three basic layouts are,

a) Type I, no division and continuous flow.

b) Type II, division at subtertiary level.

c) Type III, division at quaternary level.

Each basic layout has advantages and disadvantages:

a. Type I. (Figure 1 and 1A)

Most irrigation layouts are of this kind with variations provided by placing checks in the canal to raise the water level over the pipe outlets and irrigation is continuous along the canal, water being tapped directly into the farm unit. Water may be passed from field to field and on to an adjacent farm units. Selective irrigation is not possible with this layout and it is not suitable for crops other than paddy. Uncontrolled and unrestricted tapping of water is possible and will lead to poor allocation of water and inefficient distribution. Farm units furtherest from the water source do not receive the full allocation of water.

b. Type II. (Figure 2 and 1A)

The branching of canals occurs at sub-tertiary level and the quaternary canals takes off from the sub-tertiary division boxes. At least one sub-tertiary division box is required for each quaternary canal though more than one can be used in some cases. It does affect rotational supply. Direct access to the tertiary canal is prohibited.

Equal time (E.T.) rotation is possible at sub-tertiary levels with simple open-and-shut division boxes, provided that the sub-tertiary units are of equal area. (or approximately equal area). Equal time rotation is not possible at the quaternary level with simple

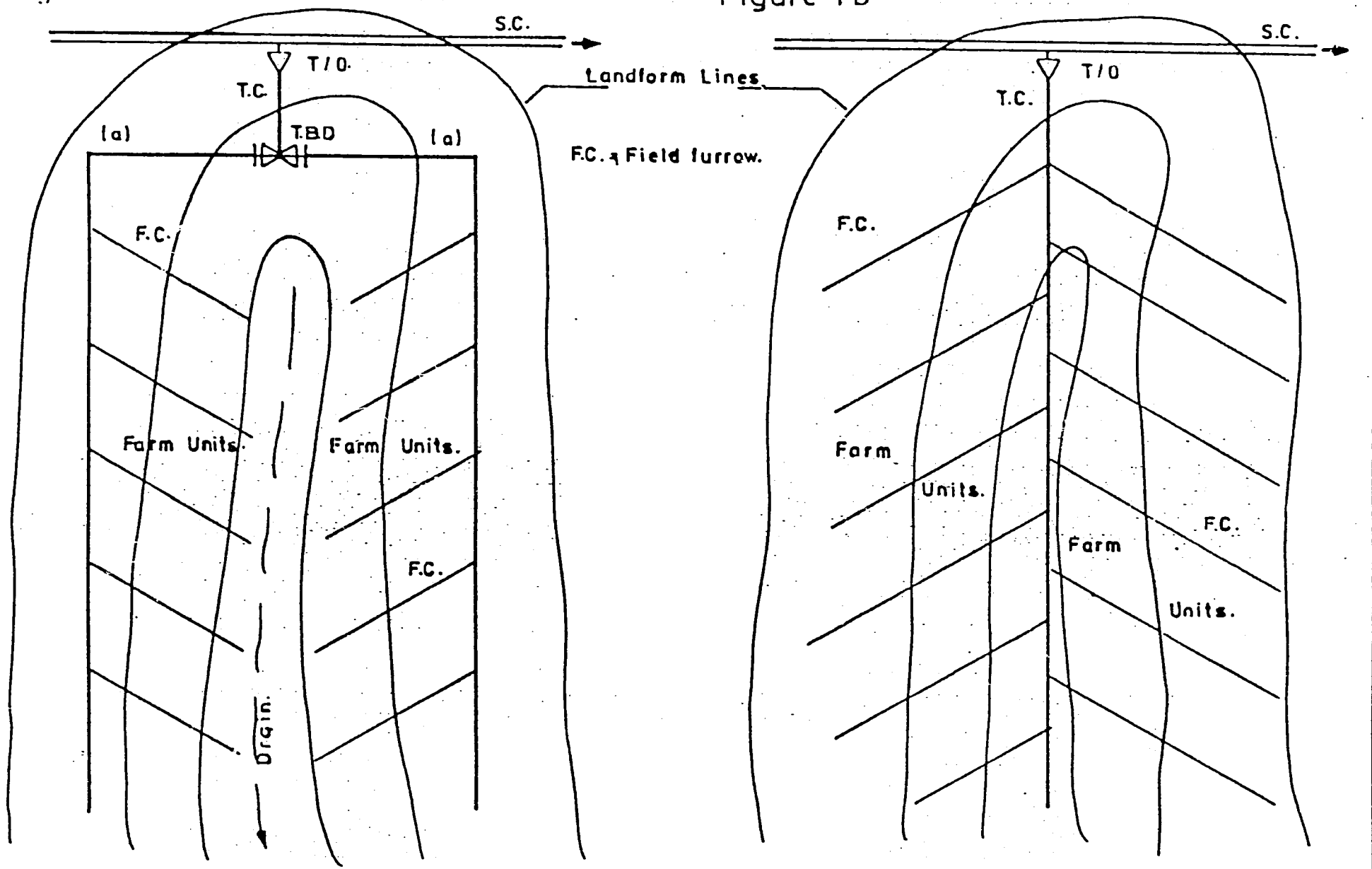

Tertiary Canal and Sub-tertiary along Valley Sides

Tertiary Canal on the Crest.

Note that there is no quaternary sub-division and water is diverted from the T.C. on to the farm fields.

Figure 2a.

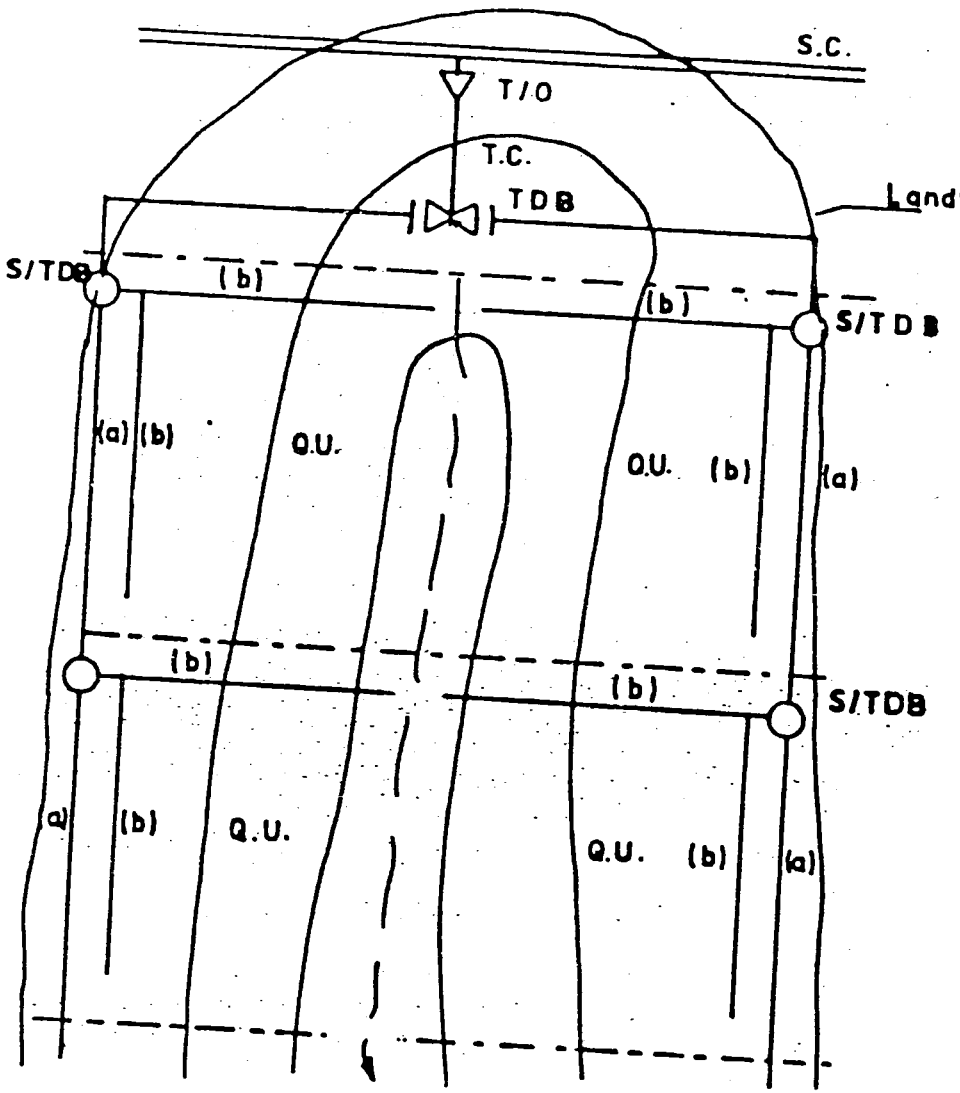

Valley Location.

Figure 2b.

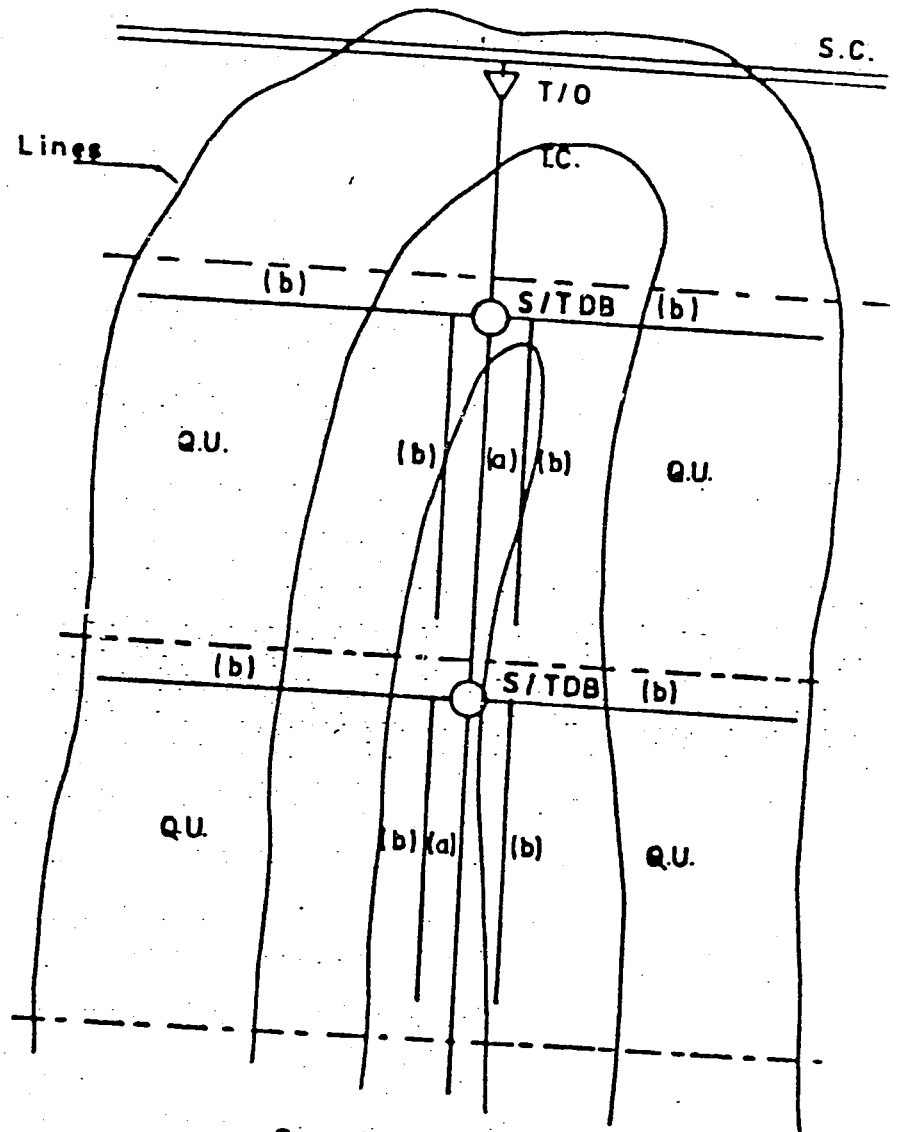

Crest Location.

Note Quaternary Unit - Q.U.- sub-division and Q.U. boundaries ------.

division boxes even with quaternaries of equal area owing to the large variation in flow ratios. However, where variable flow regulation may be used then "Equal time" rotation and selective water deliveries are possible. Multiple channels running in the same direction will occur in some topographic situations and where soils are unstable the channels must be lined.

c. Type III. (Figure 3 and 3A)

The lowest branching occurs at the quaternary level. Tertiary canals branch to subtertiary and into quaternary canals and usually one division box serves two or more quaternary units (or blocks).

Equal time rotation can be practiced at both the subtertiary and at the quaternary levels using simple division boxes provided the whole area is divided into groups at units of almost equal area. Figure 4 Equal Area Rule.

This more elaborate layout provides the most flexible arrangement but there are some serious problems too,

i. It may be difficult to arrange the quaternary blocks into pairs of about the same area. A deviation of up to 15% is acceptable providing the control interval is not too small nor too rigidly applied.

ii. Depending on the topography, multiple channels may occur along side each other and these channels will have to be lined to prevent merging.

Figure 3a.

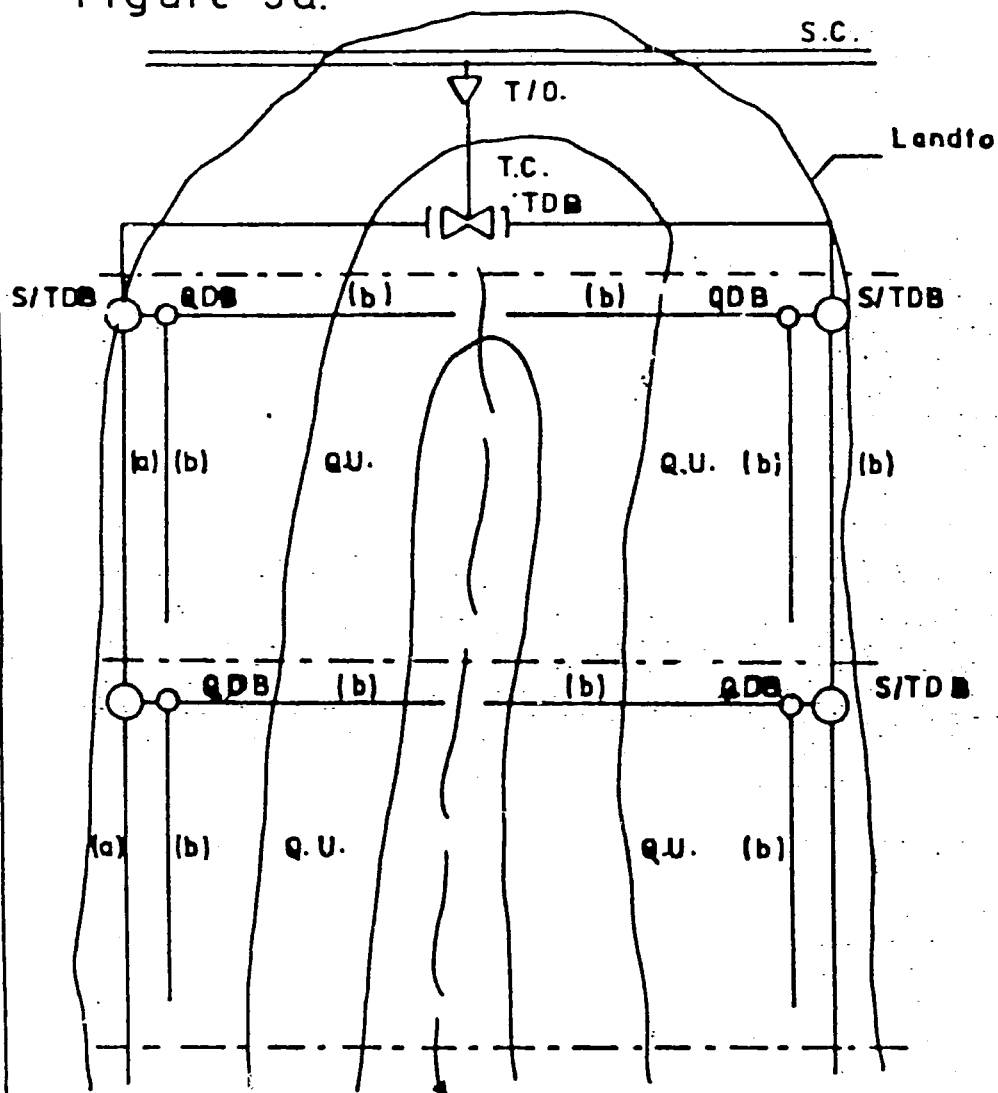

Valley Location.

Figure 3b.

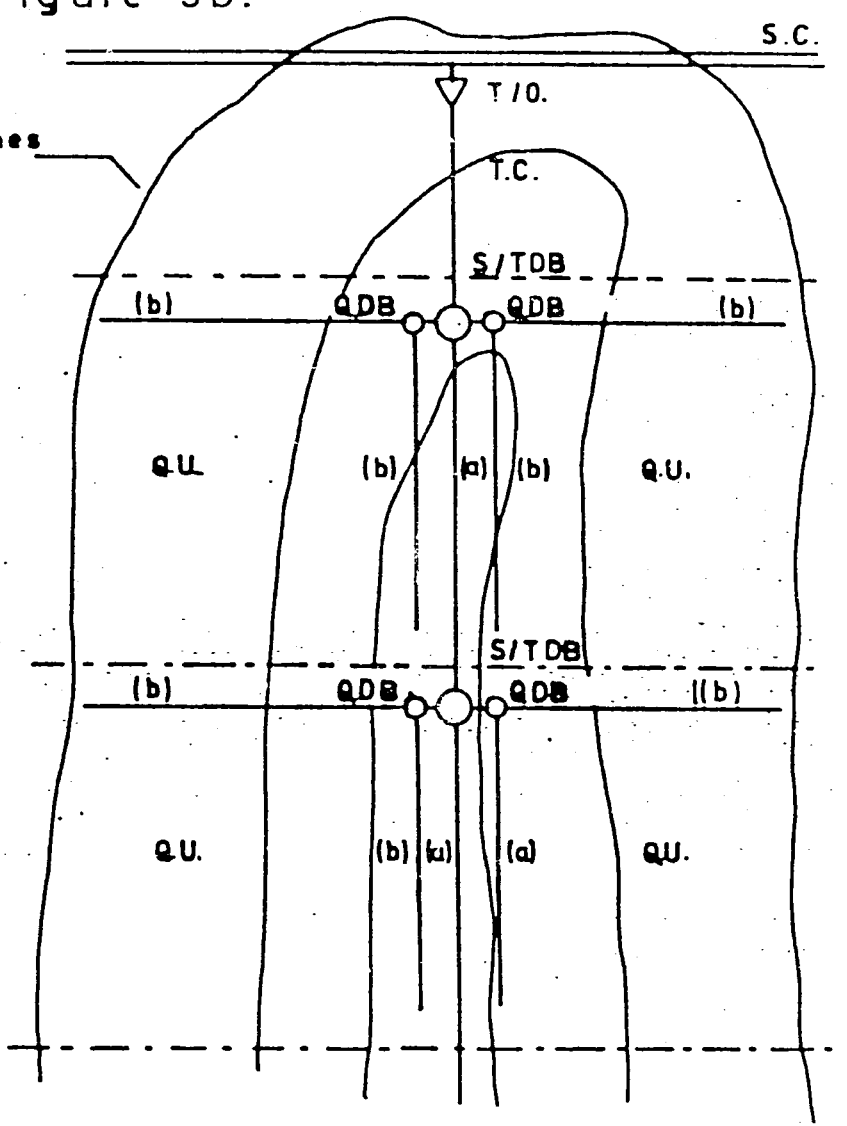

Crest Location.

Note the addition of Quaternary Division Boxes - QDB = O.

Figure 4.

Equal Area Rule.

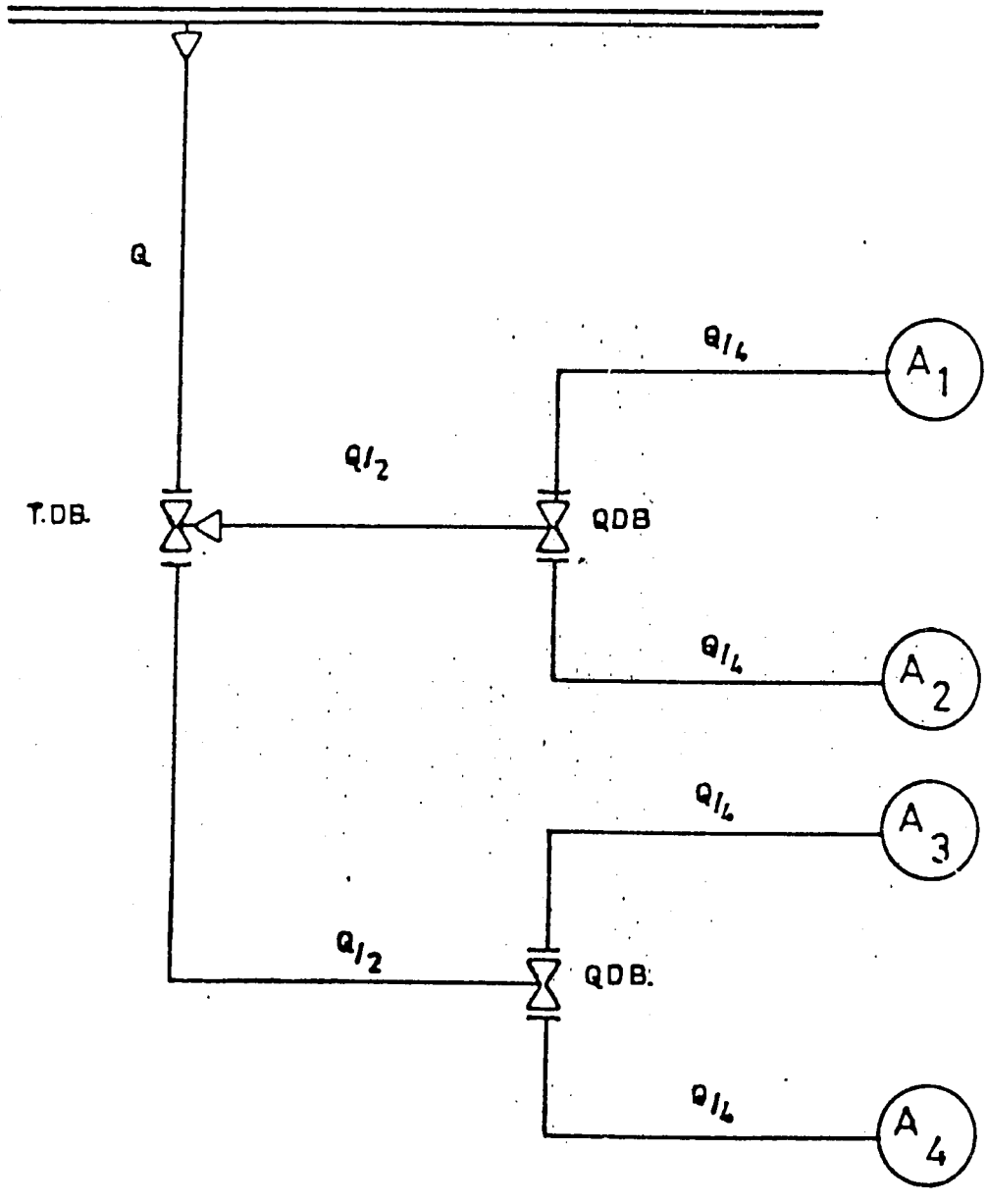

1. Proportional distribution can be practiced for Continuous flow when

$TDB = Q/2$ and $QDB = QDB = TDB/2$. (Note TDB = TB and ODB = QB)

2. Equal time distribution is only possible if all the areas are equal,

when $A_1 = A_2 = A_3 = A_4$. [Quaternary Unit areas]

3. Similarly, Tertiary areas should be approximately equal to obtain equitable distribution and regulation along the Secondary canals,

d. Compromise Type Systems For LNO

However, in practice a practical compromise may be required between either of the three types of layouts. The most suitable to maintain realistic water control would be Type II using simple fixed ratio division boxes though this precludes equal time rotation at the quaternary level. But, with variable flow division boxes equal time rotation can be practiced providing the equal area rule is observed (Figure 5). The kind of variation in division box ratios required to allow rotation at the quaternary level is shown in Figure 6 and in Table No. 1. (This diagram and Table is repeated in Appendix 1).

3. Recommended Tertiary Layouts For LNO

The modified Type II layout is advocated for the conditions of the Lam Nam Oon project in the Land Consolidation areas. A slightly modified form of Type I but including a limited number of division boxes could be used for the Dyke and Ditch areas.

4. Water Division Boxes

The division box is the central part of the tertiary system providing the required regulation and apportionment of water. Two kinds are considered,

i. those that permit variable control and division in any ratio. These consist of either manual gates or automatic gates but these are costly and

Figure 5.

Schematic diagram of division box operation.

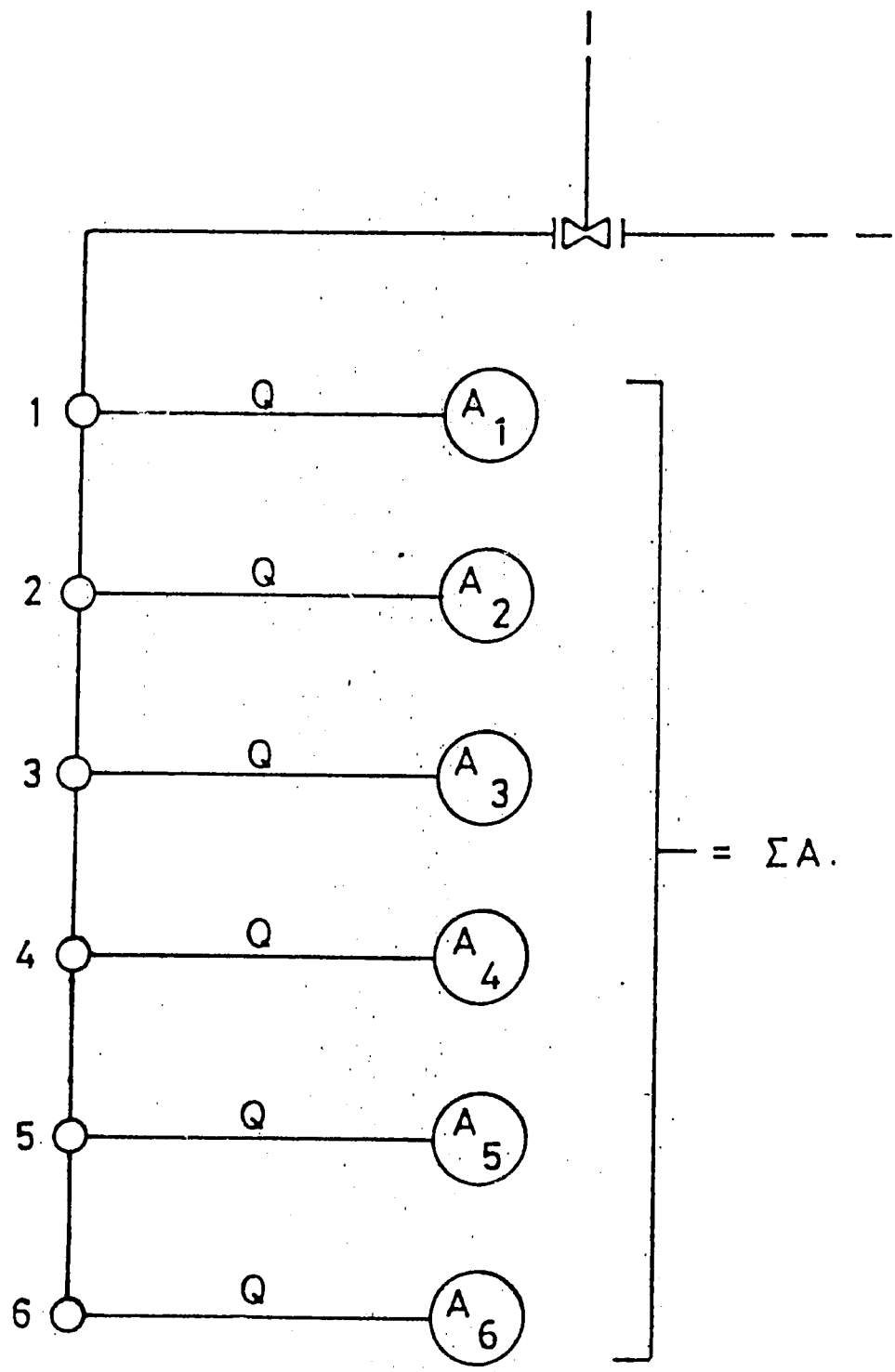

An example of a Type II layout illustrating variations in box ratios permitting rotation at Quaternary level. See Table 1.

Required Box Ratios.

Box N°		1	2	3	4	5	6
Continuous	open. / closed.	A_1 / $A_2 \leftarrow\cdots\cdots\rightarrow A_6$	A_2 / $A_3 \leftarrow\cdots\cdots\rightarrow A_6$	A_3 / $A_4 \leftarrow\cdots\cdots\rightarrow A_6$	A_4 / $A_5 \leftrightarrow A_6$	A_5 / A_6	A_6 / C
Rotations.							
1.2.3.	1st	A_1 / $A_2 \leftrightarrow A_3$	A_2 / A_3	A_3 / C	C / C	C / C	C / C
4.5.6.	2nd	C / O	C / O	C / O	A_4 / $A_5 \leftrightarrow A_6$	A_5 / A_6	A_6 / C
1,2.	1st	A_1 / A_2	A_2 / C	C / C	C / C	C / C	C / C
3, 4.	2nd	C / O	C / O	A_3 / A	A_4 / C	C / C	C / C
5,6.	3rd	C / O	C / O	C / O	C / O	A_5 / A_6	A_6 / C

Range of ratios with approximately equal areas.

A_1	1:	to	1:1.
A_2	1	to	1 1.
A_3	1	to	1 1.
A_4	1 2	to	1 1.
A_5	1 1	to	— .
A_6	-		-

Open = Quaternary canal.
Closed Sub-tertiary canal.

Possible Rotations with Type II Layouts and Division Box Ratios.

Table 1.

Figure 6.

require constant maintenance, and;

iii. those that limit division ratios to simple fixed ratios, either open-or-shut, sliding gates or flap gates.

The simple, proportional division is obtained by using fixed width openings with constant crest heights. The design of the control structures follow standard practices and may be constructed of concrete or built of masonary. The various kinds of division box designs are given in Appendix 3.

5. Tertiary Canals

The capacity of the canals should be determined in accordance with the unit water requirements and the distance from the source.

The unlined canals should be designed according to the regime theory; that is, for a state of natural equilibrium. However, regime channels having a larger width-to-depth ratio than that can be permitted. Because of this the channels should be designed within a range of Froude numbers and with limited tractive force related to the kind of soils occurring within the project area.

The design of small channels based on the principles of tractive force and Froude number limits are elucidated in Appendix 4. A set of tables based on these principles have been prepared for use at Lam Nam Oon.

6. Tertiary Drains

Tertiary drains must be provided so that surplus water can be drained from the paddy fields. The capacity of

such drains will be determined according to the storm and/or rainfall characteristics and landform. The design of the channels sections should comply with the recommendations given in Appendix 4 (Part III).

The fact that the tertiary drains flow into secondary drains and then into the primary drainage system must be recognized. All too frequently this is not done and the drainage system does not work. The design of drains follows the principle that the system is designed from the tail end, the primary drain end, up to the tertiary drains.

7. Tertiary Layout Criteria

The design of the tertiary layouts should follow along the lines set out in these criteria.

1. Physical Features

   (a) the tertiary units should fit onto the landform of each locality,

   (b) the units should be bound by existing road, natural drain and canals,

   (c) in principle the system should be superimposed on to the natural features of the locality and not forced into it. If this happens, excess land modification will be required.

2. Tertiary and Quaternary Unit Sizes

   The size of these units will vary from place to place, depending on landform, soils, and the cropping pattern. The following limits have been found to be practical

for wet paddy and careful study of the project area would indicate that this applies to upland crops in the area.

(a) tertiary units should not be less than 500 rai (80 ha) and should not exceed 625 rai (100 ha) while the maximum should never exceed 950 rai (150 ha).

(b) quaternary units should not be less than 60 rai (or 10 ha) nor longer than 125 rai (20 ha). These size limit should meet with these basic requirements:

i. efficient water control and allocation.

ii. social aspects of water user associations or farmer groups.

iii. the physical features of the project area.

3. Canal Lengths

The length of the unlined tertiary canals in the unstable soils of Lam Nam Oon should not exceed 1000 metres, while quaternary canals should not exceed 300 metres.

4. Canal to Drain Distance

No field should be more than 300 metres from the supply canal, nor should the distance from canal to drain be more than 300 metres.

5. Structures

The number of structures required should not exceed

Tertiary turnouts/division boxes	1 per 50 ha.
Quaternary/division boxes	1 per 25 ha.
Bridges and syphons	1 per 33 ha.
Earthworks not to exceed (including levelling)	100 m^3/ha.

6. Multiple Channels

Multiple channels are unavoidable but they should be used as little as possible even if it means using an additional structure.

7. Roads

Three levels of roads should be used within the tertiary units.

(a) access roads: these roads are really roads constructed under the project auspices

(b) roads along tertiary canals should not be wider than 3.0 to 3.5 metres; wherever possible roads should be made narrower, only to take light motor vehicles and farm tractors. Circuit roads or layby's should be used to allow for the overtaking of vehicles rather than making roads excessively wide.

(c) roads along quaternary canals should not exceed 1.5 to 2.0 metres to provide access for light farm tractors and motor cycles

(d) bridge/culverts should be provided over canals

(e) road crests should not be more than 0.5 m. above the mean paddy height.

8. Land Used for Services

The area of land taken up by canals roads and structures will depend greatly on the landform, soils and land use but,

(a) canals, together with tertiary roads should not exceed 40 to 50 metres per ha.

(b) the total area taken by services should not exceed six percent of the net irrigated area or this may be the gross area contributed by the farmers under the Land Consolidation Act and limited to 7% under this Act.

Note that specific design criteria for canals, drains, roads and various kinds of structures will be given in the relevant Appendice dealing with these aspects of design. This Technical Note only deals with the design of tertiary layouts.

TECHNICAL NOTE

NO. 1

PART III

THE DESIGN METHODOLOGY FOR TERTIARY AND QUATERNARY UNITS

A. Introduction

Part III, is intended to provide a practical guide for the design of Tertiary and Quaternary units using the criteria given in Part II.

The guidelines given here should be used as the basis for the design of the tertiary layouts. It should be understood that each and every site or location will be different one from the other and problems concerned with design have to be solved within the context of that locality according to the soils, the topography and other such natural factors. Further, within an irrigation area one unit is directly related to the other by virtue of the supply of water and it's continuity throughout the project.

The prime principle of tertiary design is to "fit the system" onto the prevailing landform of the farm or field and not into the fields and change the landscape to fit the system.

B. Maps and Plans

The first activity in designing an irrigation layout is to have available, if not, to produce maps of suitable quality and realiability. The most suitable means for producing good quality maps is to use aerial photography and the equipment used to correct and eliminate errors in the photographs. However, the field surveyor cannot be eliminated from the measurement of details in the field, elevational measurements and obtaining cadastral records.

Experience has shown that the design of irrigation layouts requires a very high standard of mapping and surveying, though the surveying required is more intensive than exacting. The ideal base is, of course, the controlled or rectified aerial photo mosaic.

The technique of field levelling using the mosaic has been perfected. In developed paddy areas the pattern of the fields are themselves used as a locational control. In this case a point level is taken in the middle of each paddy and the level value recorded directly on the mosaic. This method has proved to be more efficient and speeds up the survey work and results in a very suitable map for planning.

The production of maps and plans can be divided into two phases,

i. First phase, includes the production of maps and plans for the preparation of contract documents and these are referred to as the Preliminary Drawings.

ii. Second phase, the correction and alteration of the preliminary drawings during the course of the construction of the works, these are then referred

to as the Final Drawings.

The preliminary drawings forming the contract drawings are the detailed design maps and drawings.

i. The future layout with the existing situation and the proposed tertiary layouts, compiled from the Base Map and referred to as the Detailed Layout Plan, drawn to a scale of 1:4000.

ii. The drawings showing the details of the layout are,

a) the tertiary and quaternary canals profiles,

b) the details of the division boxes.

c) other structures, culverts, syphons and drop structures.

iii. Standard drawings of various kinds,

a) tertiary canal cross-sections (with roads).

b) quaternary canal cross sections.

c) tertiary drain cross sections.

The design drawings of higher order drains may be combined with these drawings where this is considered necessary.

It should be noted that once the Base Map has all the final layout detail drawn on it becomes the Detailed Layout Plan and (ii) and (iii) above are referred to as the Detailed Tertiary Unit Layout and Design Drawings.

- Aerial Photo Mapping

a. Controlled Mosaics

Tertiary design requires a very high standard of mapping. The ideal base for the mapping is the controlled mosaic and combined with ortho-rectifi-

cation, parallax-free mosaics can be produced with great clarity and definition. Mosaics or rectified air photos should be used. The scale required for the design at layouts is from 1:5000 to 1:4000. Diapositives - clear transparent mosaics from which dye-line prints can be made - should be used for making the base maps and for recording the field survey work.

b. Cadastral Detail

The position of fields, farms and villages boundaries and other physical data is clearly shown on the mosaic. The plot registration numbers and even the owners name can be written on to the mosaic.

c. Topographic Detail

Topographic detail that is required for tertiary layout design are the contour lines at 0.25 or 0.5 metre interval. The use of a contour intervals as close as 0.25 is really hypothetical and does not improve accuracy at this scale. The contour lines mainly "guides the eye" and the spot levels will be used for closer engineering design. Thus, the spot heights should be accurate.

d. Common Errors in Mapping

Errors and mistakes that occur on mosaics and base maps are:

i. boundaries between two mosaics do not correspond.

ii. the rectification is not correct and the scales

between two mosaics are not constant,

iii. grid lines are not correctly annotated,

iv. wrong bench marks used as reference points resulting in erroneous level reductions and contour designations,

v. topographic details incorrectly identified,

vi. arithmetic errors in level reductions,

vii. drafting errors showing level values wrongly entered on map, wrong names used, wrong coordinates and map reference numbers.

The general rule implies that the fewer times a map is reworked and entries made on it the more accurate the final product will be.

2. Design Drawings

The tabulation in an upcoming Technical Note on survey procedures will indicate the difference between the mapping procedures recommended and those used at present at Lam Nam Oon. The recommended mapping and plan preparation procedure would reduce the total time needed to produce the map and the finished design drawings which would reduce costs, improve overall accuracy and speed up the output of maps and design drawings.

In this procedure the preliminary drawings consisting of the detailed design drawings can be divided into two parts and these will form the first phase of the preparation of the design drawings, comprising of:

a. the base maps on which is compiled all existing information. This is used for the layout of tertiary and quaternary system;

b. the detailed design maps and drawings that will be used for construction and form part of the contract drawings.

a. The Base Map

The base map forms the basis for the design of the tertiary and quaternary layout. However, the primary and secondary canal system must be shown on this map particularly the hydraulic details at each tertiary turnout, the full supply level and the canal invert levels.

b. Base Map Preparation

The size of the base map should be of a standard size up to 1000 by 1250 m.m. this being the largest convenient size, though smaller standard sized drawings may be more convenient to handle say 850 x 1000 m.m. Hence, the project area should be divided into such map units. Photo-mosaic sheet divisions should not be used as they are too small to show contiguous areas making it necessary to constantly refer to adjacent sheets or photos and this leads to inaccuracies and a waste of time.

The compilation of the Base Map sheets should include the following details taken from the photo mosaic and drawn on transparent calque* though; preferably transparent dispositive sepia prints should be used for the compilation of the Base Maps.

---

* Transparent calque, material such as Kodatrace, or similar polyester film.

i. The coordinate grid or graticule should be the same as that used on the photo - mosaics; and at the same scale, viz 1:4000.

ii. The spot heights should be shown.

iii. The contour lines are drawn in at 0.5 or 0.25 metres.

iv. Detail all roads, village boundaries, public land, forests, the natural drainage; and ponds or lakes.

v. Detail the primary and secondary conveyance canals, structures, the full supply level and the invert level at all off takes, drop structures, culvert and syphons should be shown in box labels.

vi. Where diapositive sepia prints are used to compile a standard sized sheet, great care must be taken that the edges of each of the mosaics correspond exactly without overlapping.

Once the Base Map sheets have been compiled and checked, a set of dye-line prints are made from the map and the preliminary Tertiary Unit layouts are then sketched. When completed on these prints the final tertiary and quaternary layout details are then transferred back onto the original Base Map, and this Base Map is now referred to as the Detailed Layout Plan. This would complete the detailed layout of the tertiary units.

c. Detailed Design Drawings

The Detailed Design Drawings form part of the tender documents; the schedule of materials are taken from these drawings and the construction will be based on the designs shown on these drawings.

A complete set of these drawings form the basis of the Preliminary Design Drawings. Once the construction work is underway and as the work proceeds so the designs are changed to suit the exact field conditions the Preliminary Designs are changed to the Final Designs. All the drawings pertaining to a tertiary unit will be bound together in a single volume and shall form the primary part of the contract documents.

3. Preliminary Tertiary Design Procedures

Though the preliminary design procedures follow common engineering and drawing office procedures it needs not be necessary to repeat these here. However, a step by step procedure covering all the activities will be given in order to follow both the preceding section and the following sections.

1. Base Map : Compiled from mosaics including all specified detail drawn on standard sheet at a scale of 1:4000. Base map is taken to be a diapositive transparancy.

2. Base Map : Spot levels drawn in and additional data from field survey added.

3. Print of Base Map : (1) drawn in contour lines.

(2) plot alignment of primary and secondary canal system.

4. Base Map : Transfer (3) to Base Map sheets

5. Print of Base : Draw in preliminary layouts of the tertiary and quaternary system, check layout, measure areas and finalize.

6. Base Map : Transfer details 5 to Base Map.

7. Print of Base : Commence detailed design of tertiary system. Design procedure for tertiary units

   i. measure size of tertiary and quaternary units.
   ii. designate tertiary and quaternary units, canals and drains
   iii. calculate rotation time schedules
   iv. preliminary calculations for water levels in division boxes.
   v. check all calculations
   vi. trial longitudinal profiles of canals.
   vii. check profiles and boxes.
   viii. finalize profiles and details of division boxes and other structures.
   ix. prepare all required data tables.
   x. complete drawings Tertiary Unit Layout and now called Detailed Design Drawings.
   xi. transfer planimetric details of canals and structures to Base Map.

8. Base Map : Base map is now referred to as the Detailed Layout Plan.

9. Print of Detailed Layout Plan : Design procedure for tertiary drains

i. designate all drains.

ii. calculate drain discharges from rainfall and surplus irrigation water. (use pro-forma).

iii. plot longitudinal profiles of drains.

iv. design required structures.

v. check all calculations and drawings

vi. finalize design.

vii. transfer details to Detailed Layout Plan.

10. All Plans : i. check all Plans

ii. number all drawings

iii. compile the Detailed Tertiary Unit layout and Design Drawings and bind together

iv. prepare all contract and tender documents.

This completes the procedures required to arrive at the final designs of tertiary systems.

4. Final Drawings

The second phase covers the design activities during the construction of the project. The layout will be staked out in the field and both longitudinal sections and cross sections

will be taken of the canal and drain alignments and of the structures. The preliminary designs will be adjusted and modifications made on the basis of the field work, taking into account detail unforeseen during the previous surveys. This includes such matters as religious objects, sacred ground, physical obstructions and cadastral changes.

The steps taken in the course of this second phase are:

1. The tertiary and quaternary canals and drains are staked out according to the Layout Plan.
2. The pegs or beacons are located at 50 m. intervals or closer on curves or through rough terrain.
3. Structures are located and the field levels checked against the design division box invert levels. Where land levelling has been carried out the invert levels will have to be adjusted to coincide with the new critical field levels.
4. The canal bed slopes may have to be adjusted to coincide with adjusted division box invert levels.
5. Cross section are taken at each peg and then are plotted on the design cross sections and the differences in the cross sectionals calculated and the earth volumes are adjusted accordingly.
6. Any realignment of canals or drains are carefully plotted on the Detailed Layout Plan and designated Final Detailed Layout Plan. Such changes should also be made in the Detailed Tertiary Unit Layout and Design Drawings as well once corrections have been made. "Final" is added to the title.

C. Detailed Layout Design of Tertiary Units

The design criteria given in Part II will form the basis of the design of the tertiary layout. Specific design factors such as unit water requirements, drainage coefficients and canal design details will be discussed in the relevant sections.

1. General Layout Principles

The Tertiary Unit forms the basis of the water management system. The regulation of water to the farm unit can take place at the Secondary Canal turnout, at the Sub-tertiary Turnout or at the Quaternary Turnout. In the early stages of project operation regulation will in all probability, take place at the secondary turnout, as the farmers become more proficient in water use and their organization is more effective regulation can take place at the Quaternary Turnout level. Thus, the design allows for different levels of regulation without subsequent modification and additional construction.

The tertiary unit boundaries are defined by natural drainways, roads or arbitarily set boundaries. The size of the unit varies is size from 500 rai to 950 rai, but ideally should be about 625 rai.

The Tertiary Unit is sub-divided into pairs of Quaternary Units of almost equal area. This requirement is needed for proper rotational water management. The units range in size from 60 rai up to 125 rai, however, smaller units may be use if this is considered necessary.

The water supply to the tertiary unit is regulated at the

tertiary turnout or farm turnout located at the primary or secondary canal. The flow of water is measured by means of a constant head orifice (CHO) turnout or some similar measuring device. From the off-take it flows through the tertiary canal to the quaternary division boxes into the quaternary canal. Because of the farm layout pattern or the landform it may be necessary to divide the tertiary canal at some point into two canals forming sub-tertiary canals.

Each farm unit will have an outlet from the quaternary canal located at a highest point of the farm. As the farmers become more proficient in on-farm water management, that is conveying water on the farm unit and proper water control for crops, other than wet paddy, farm laterals will be required to convey water about the farm unit. Water will be diverted to the farm unit through suitable pipe turnouts or even the use of preformed rigid plastic syphon pipes. The discharge of water from the quaternary canal to the farm unit will be regulated by raising the water surface by means of check gates. Surplus water will be discharged into the tertiary drains.

Tertiary drains will be designed to provide for draining off surplus irrigation water and for storm run-off drainage. The tertiary drains discharge into secondary drain that have been improved or canalized and finally into the main river system.

2. Layout Design Criteria

The layout design criteria closely follows the criteria in Part II.

i. Each tertiary unit should have a separate turn-out, with a measuring device on the secondary canals.

ii. The tertiary and quaternary canals should follow along farm boundaries as closely as possible without sharp, abrupt bends. Limited farm boundary adjustment will be needed to accommodate canal and drain locations.

iii. The net irrigated area within the tertiary unit should not be less than 94%. (services areas* should not exceed 7%).

iv. The dimensions of the canal will be calculated by means of the procedure given in Appendix 2.

v. The length of unlined tertiary canals should not exceed 1000 m. in light sandy soil and 1750 m. in heavy clay soils.

vi. Quaternary canals should not exceed 300 m.

vii. The width of access or farm roads shall be as follows:

Tertiary canals	3.0 - 3.5 m.
Quaternary canals	1.5 - 2.0 m.
Main access roads	4.5 m.

viii. Roads along tertiary and quaternary canals shall be 0.5 m above average field level.

---

* Service areas refers to areas taken up by canals, roads and structures.

ix. Water will be discharged into farm units through pipe outlets of standard diameter under a specific head. Alternatively, syphon pipes may be used. Details of the farm outlets will be given later technical notes.

x. Farm outlets shall be located at the highest point of the farm unit next to the quaternary canal.

xi. Tertiary drains should not be more than 300 m. from other quaternary canals and ideally about 250 to 300 m.

xii. All farm units should drain directly into a drain.

xiii. Drain capacity shall be determined by means of the procedures to follow.

3. Detailed Layout Procedures.

The detailed design procedures in the preceding section will be applied in the development of layout of the tertiary system. The layout procedure will be described in detail and is divided into two steps.

4. The First Step

A print of the Base Map, at a scale of 1/4000, which has both the contours and spot heights drawn on it is to be used. The natural drainage lines are shown on the air photos and transferred to the Base Map. On the first trial, the Tertiary Unit boundaries are sketched in for contiguous areas on a single sheet once these have been completed then areas across the edges of adjacent sheets should be completed. After carefully checking the layout of the tertiary unit boundaries the areas are measured with a planimeter and

checked that the areas do not exceed the limits specified in the criteria. The tertiary units are then divided into pairs of quaternary units and again planimetered and the areas obtained checked again.

In the course of demarcating the respective boundaries the general alignment of the tertiary and quaternary canals together with the position of division boxes, culverts and spillways are noted and lightly marked in on the base map. Special attention must be given to the location of drains and specifically the outlets from the tertiary drains into the secondary drains and onto the primary drains. The Golden Rule in designing any hydraulic structure such as canals and drains is to start at the tail end and work back to the head. (Most water management problems occur in the tail sections because of inadequate design).

Once satisfied that the layout complies with the criteria and that the areas are correct and the tertiary boundaries are properly demarcated, they are "firmed in" on the base map.

Finally, the tertiary and quaternary units are designated with appropriate nomendature.

This completes the first step in the completion of the Detailed Layout Plan.

5. The Second Step

Having completed the Detailed Layout Plan a copy of each individual tertiary unit is obtained either by "blocking out" the area using a mask or by tracing off the area from

the Detailed Layout Plan. The method of making dye-line sepia transparent prints is expensive but it is more accurate and less time-consuming than having to retrace each unit on a separate sheet. These drawings are made on 278 x 570 m.m. size drawings. The detailed layout of each tertiary unit proceeds in the order shown in the following listing.

1. Check the demarcation of the tertiary unit boundaries to ensure that they follow the required criteria and the drainage lines should be carefully checked too.
2. Mark in (in colour pencil) the maximum spot height in each farm unit; this will be the critical field level. Where fields are to be levelled the final level after land levelling must be used.
3. Check full supply level and invert level of the supply canal at the turnout.
4. Sketch in the tertiary canal alignment follow along the high ground, allow sufficient slope for losses and a value of .0005 m. per m.may be used for a preliminary estimate and following along farm boundaries.
5. Align quaternary canals along farm boundaries allowing for an outlet at the highest position on each farm unit.
6. Realign farm boundaries and adjust areas to obtain equality with original areas.
7. Calculate required water level in tertiary division boxes using standard form in Table No. 1.

8. Check all calculations and procedures from 1 to 7.

9. Draw up system diagram. "firm in" all canal alignments lengths, discharges and designations (see Appendix 1

10. Estimate water delivery rates for each quaternary unit from the curves for preliminary estimates using the Tegal Curves in Appendix 4.

11. Calculate the rotational time schedule for the quaternary areas at different delivery levels; sic. 100%, Q 75% Q; 50% ; & 25% Q. (see Appendix 1). Use average capacity rather than maximum capacity.

12. Calculate canal dimensions enter into tabulation and showing water level elevations as shown in Table No. 1 and using the methods for calculating the flow in channels given in Appendix 2.

13. Compile division box tabulation showing dimensions of boxes, the outlets and water level elevations above box invert level, fill in data on Table No. 3.

14. Check all calculations and tabulations from 9 up to 13.

15. Plot longitudinal profiles of tertiary and quaternary canals taking details and elevations from the spot height map. Note that each canal between the turnout and the division box and between division boxes and spillways are shown on a separate drawings.

16. Once the location of the canals and structures have been finalized the drawings can be finished.

17. Prepare all the Tables and check the data.

13. Transfer the tertiary canal alignments to the base map.

19. Estimate drainage discharge coefficient using curves for each tertiary area and calculate the discharge from each of the areas.

20. Calculate capacities of the drainage channels and enter dimensions in Table No. 4 using methods given in Appendix 2.

21. Check all Calculations

22. Plot longitudinal sections of drains and cross sections.

23. Review all preliminary layouts and designs.

24. Finalize all profiles and sections of tertiary and quaternary canals and structures and complete all drawings.

25. This now completes <u>Detailed Tertiary Unit Layout and Design Drawings</u> and the following drawings will be bound into a set of drawings, containing the following for each <u>tertiary unit</u>

    i. Rotational time and quantity calculations, Table # 2.

    ii. Map of existing situation with contours spot heights, farm unit boundaries and other necessary detail.

    iii. The new layout with canals, drains and structures.

    iv. The layout showing position of cross section of canals and drains.

    v. The longitudinal sections of the canals and drains.

vi. Cross sections; taken at least every 50 m. of canals of drains.

vii. Details of all the structures and the tables used to draw up the designs,

Table No. 1 Quaternary Division Box Calculations

Table No. 2 Rotational Times & Quantities (see Appendix No. 1.

Table No. 3 Details of Division boxes

Table No. 4 Tertiary Drain Calculation

26. Transfer detailed layout to Detailed Layout Plan,

i. Final boundaries of tertiary and quaternary unit,

ii. Alignment of canals and drains

iii. Location of structures and roads

iv. Realignment of farm boundaries.

27. Measure up all quantities taken from the Detailed Tertiary Unit Layout and Design Drawings compilations.

28. Compile Quantity Schedules on standard format and calculate costs for estimates.

29. Compile Tender documents

i. Schedule of Quantities (if required)

ii. Specifications

iii. Conditions of Contract

Note that a complete set of all drawings and standard forms for each Tertiary Unit are bound together with covers on which the titles give the full details of the Project, the Tertiary unit number and location, are printed.

D. Design of Quaternary Canals

Please note that the design of all hydraulic conveyance systems begins at the lowest point, hence, the design of quaternary canals precedes tertiary canal design.

The quaternary canal begins at the division box located on the tertiary canal and each division box outlet may supply water to one or more canals. It should be noted that quaternary canals can be subdivided but this may complicate the water distribution procedures.

1. Structures

There is a limited number of structures on a quaternary canal, namely,

a. aquaducts or flumes for crossing drains,

b. culverts for crossing roads,

c. drop structures to be used when the land slopes excessively,

d. check structures to raise the water surface in the canal over the farm outlets.

2. Division Box Water Levels

The water level in the division box on the tertiary canal can be derived in the following manner, where.

Q.C. level = a + b + c + d + e + f + other losses.

a = critical field level, expressed as a reduced level

b = water layer depth on field (design depth), 0.15 m.*

c = head loss through the farm outlet (the depth of the water surface in the canal over the outlet), taken as 0.10 m.*

d = canal conveyance losses, which may be taken at .0005 * m/m for roughly estimating the depth.

* Alternative values may be used.

e = head loss for each additional structure along canal, .05 m each.*

f = head loss through the division box outlet taken as 0.10 m.*

* = (other values may be used)

Thus, the losses along the quaternary canal (Q.C.) at the division box is Q.C. level = a + d + .40

3. Critical Field Levels

The individual paddy fields within each farm unit have a specific elevation - or level that the supply of water has to reach at that point and that level is referred to as the Critical Field Level.

Of course, where paddy fields are to be levelled then a mean field level is determined and referred to as the Design Critical Field Level.

If the case arises where a single paddy is much higher than the other paddies, then the mean paddy height may be used instead and levelling of the high paddy may be required.

4. Calculation Procedure

The calculation of the water levels in the division box and the quaternary canal can be done by using the standard format in Table No. 1.

Column 1. Designation of the canal

" 2. The length of the canal, from division box up to the drain.

" 3. Critical Field level

---

* Alternative values may be used.

Column 4. Distance from the farm unit with the critical field level up to the division box (it may include a section of the tertiary canal to the furtherest downstream box).

" 5. Minimum headloss is the minimum slope multiplied by the distance in Column 4.

" 6. Division box downstream water level is the Critical Field level plus water-level plus headloss over the farm outlets plus the headloss through the division box.

" 7. Minimum required water level in the division box, the box headloss is 0.10 m. and additional losses for each structure has to be added to the value in Column 6, the value required for tertiary canal design has to be underlined.

" 8. Division box ground level elevation is entered in this column.

" 9. Final water level. The water levels that are not critical for the calculation of the box level can be raised or lowered to avoid unnecessary excavation.

" 10. Designation of the division box which is selected for the design water level is underlined.

" 11. Remarks.

E. Detailed Design of the Tertiary Canals

The detailed design of the tertiary canals consists of plotting out the natural groundline, ascertaining the required capacities and then designing the water surface profiles and cross sections.

1. Longitudinal Profiles

For the preliminary layout, the data for the longitudinal profiles are taken from the spot heights on the Detailed Tertiary Unit Layout Drawings. The scales selected for the horizontal and vertical distances should be 1:2000 and 1:50 respectively. All the relevant data such as canal dimensions, flow data, box location and the water level of each box taken from the Quaternary Canal & Division Box Calculation Schedule. Table No. 1.

2. Canal Capacities

The capacity of tertiary canals varies with the area to be irrigated and that is the unit irrigation requirement for the net irrigation area plus conveyance losses. The canal capacities may be estimated by means of the Tegal Curve included here. To obtain the tertiary capacity the areas of each of the quaternary units are used to determine the required coefficient for estimating volume of water to be supplied and multiplying by the unit water requirement, the products are summed to get the total capacity of the tertiary canal at the turnout.

The alternative procedure is to determine the capacity of the canals by means of the Rotational procedure described in the Appendix 1. However, the unit water

requirement is based on the crop water requirement which depends on the local climatic conditions and includes conveyance losses and diversification of distribution throughout the paddy system.

3. Profiles and Sections

Water Profiles

The design of the full supply water surface profile in the tertiary canal is worked "backwards" from the downstream quaternary box and up to the turnout at the secondary canal.

To determine the full supply level, not only is the division box water level required but also the construction of the tertiary canal, whether it will be in out or in fill. It will be necessary to design the canal so that a minimum of the canal will be in fill such that the need to compact embankments will be kept to a minimum. It will not always be possible to comply with this requirement of maintaining the water levels in the most favourable situation.

The design of the longitudinal profile of the tertiary canal (or quaternary canals) is a compromise of balancing the division box water levels and the construction requirement to keep the canals in-fill to a minimum. This can only be accomplished by trial-and-error or repetitive remarking of the channel design until the required balance has been obtained. The easiest way to begin these designs is, first of all, to connect the maximum division box water levels and then calculate the slopes, then plotting these slopes on section paper together with the ground-level profile

and comparing the full supply line to the ground-level profile. It will be clear how much "drop" should be allowed below or downstream of the division box and at what location between the boxes addition drop structures will be required.

The following details should be observed in the design of profiles and sections.

1. The minimum head loss allowed in the division box is 0.10 m.
2. The maximum drop below a division box should not exceed 1.0 m.
3. For canals without roads the invert level should not be more than 1.0 m below ground-level.
4. For canals in fill, together with a road along the side, constructed in compacted fill, the water level should not be more than 0.25 m above ground level.
5. Where the provisions of (4) above cannot be complied with the canal in-fill should be lined.
6. The bottom width of the channel should be standardized if possible but not less nor exceed the width of the excavator bucket in use; however, where larger flows would indicate using a wider bottom width then the equipment must be changed and not resort to excavating deeper channels.

Costs of using additional drop structures should be balanced against the cost of additional excavation.

4. Cross Sections

The dimensions of channel cross sections are usually calculated by using the Manning or Stricker equation. However, the velocity factor should be based on limitations related to a range of Froude numbers and the channel section and bed slopes within the limits of the tractive force related to the soils in which the channel is excavated. The details of using this method will be given in Appendix 2, Channel Designs.

The velocities in unlined channels should not exceed 0.50 m/second to avoid erosion and not less than 0.2 m/second to prevent sedimentation of the canal. These limits may be reviewed according to the soils of the locality.

Usually a side slope of 1 to 1 is used but with unstable course texture, non-cohesive soils 1 to 1½ or even 1 to 2 sides may be required for some soils allowing that stable channels require less maintenance. However, channels with flatter side slope will take up more land.

The freeboard should not exceed the limits given here.

Flow (Q)	Freeboard
$<$150 lps.	0.20 m.
$>$150 lps.	0.30 m.

The minimum depth of water in the canal will vary according to the flow required but it should not exceed the minimum division box water depth.

F. Detailed Design of Tertiary Drains

1. Tertiary Drains

Tertiary drains convey excess water from the farm unit to the secondary drains and on to the main drainage system.

If the invert levels of the drain are related to or "fixed" into a drain invert level lower down, which should be the case for proper design, then in this situation the normal procedure would be as follows. Start plotting the longitudinal profile of the drain and then calculate the required cross section according to the required capacity and available slope and then plot the invert levels based on the downstream invert level.

The calculation procedure for ascertaining the required design data is shown on the following pro-forma Table No. 2 the heading are given below

Column	1.	Drain designation.
"	2.	Drainage area in rai.
"	3.	Drainage discharge from rainfall taken from curves or tables in l.p.s.
"	4.	Drainage discharge including surplus irrigation water discharge in l.p.s. and volume noted in remarks column.
"	5 & 6.	Upstream and downstream ground levels along the drain profile, usually the levels close to the proposed alignment will be used.

Column 7 & 8. The upstream and downstream full supply water level is estimated at 0.10 m below ground-level where the field level may be below existing ground-levels.

" 9 & 10. Invert levels at the up-stream and down-stream points.

" 11. The total length of the tertiary drain.

" 12. Difference between upstream and downstream water surfaces (Column 7 - Column 8).

" 13. Slope of the drain (Column 12 divided by Column 11 multiplied by 100; for slopes in percent.)

" 14 & 15. Bottom width and water depth of drain calculated according to the procedure given in Appendix 2 for calculating channel crosssection.

" 16. Designation and coordinates of the intersection of tertiary drain and the secondary drain.

" 17. Remarks column.

2. Cross Sections

The determination of the cross sections follow those for tertiary channel design except that drain have a greater capacity and the bottom widths may have to be greater and should be standardized at 0.50, .70 or 0.90 m. Free board will be 0.10 m below field level.

G. An Outline of the Design of Tertiary Structures

It is not the purpose of these guidelines to go into details of designing structures used in the tertiary layouts. Details of the types of small structures used can be found elsewhere but the following structures are usually used, bearing in mind that the whole tertiary system centres around the division box.

a. Division boxes.

b. culverts combined with division boxes.

c. culverts alone.

d. drop structures.

e. checks

f. side spillways

g. End spillways,

As the division box is the most important part of the regulation of water in the tertiary system it will be described in detail.

1. Division Boxes

The main characteristics of the division box is its function of proportionally dividing water and allowing proportional division of water along the reaches of minor canals. It is simple to operate and maintain. Detailed description of division boxes will be given in Appendix 3.

Proportional division is achieved by making the width of the openings in the box (in fact small weirs) proportional to the required discharge in each channel. This is achieved by varying the width of the opening but maintaining the cills at the same level in the box. They are usually fitted with simple open-and-shut flap or sliding gates, of robust

construction. The size of the gates for various discharges are shown below.

Flow l.p.s.	Number of gates	Width of each gate
50	1	30
100/150	2	27.5
190	3	25
230	4	25

The cill height varies from 0.10 to 0.25 m and the depth of water over the cill is 0.25 m. However, other configurations may be used to achieve the same results. The factors used to design the division boxes is given in the following detail for drawing up the pro-forma in Table No. 3.

Column 1. Name and location of the division box.

" 2. d_1; Canal Flow depth upstream of the box.

" 3. d_2; Invert level, of the box being the same as the upstream level of the canal at the location of the box.

" 4. d_3; the total depth of the box, canal flow depth plus 0.30 m (other values may be used) depending on the freeboard of the canal.

" 5. d_4; the height of the cill which is the depth of flow in the canal minus .25 m (other values may be used).

" 6. Designation of the downstream canal.

" 7. d_5; depth of water in the downstream canal.

" 8. d_6; the difference in water level between the upstream and downstream canals (d_2-d_5)

Column 9. L; length of downstream stilling basin.

" 10. h; stilling basin cill height.

" 11. w_1; w_2; w_3 dimensions of the foundations and side walls of the division box.

" 12. Remarks.

Table No. 1.

Quaternary Canal and Division Box Waterlevel Design Form

1. Standard Canal Cross Section b = d = m.
2. Free board :
3. Allowable Box head loss : m
4. Farm outlet head loss : m
5. Slope range : minimum = maximum = m/m
6. Depth of water int he paddy: m

Project:
Tertiary Unit:
Quaternary Unit:

1	2	3	4	5	6	7	8	9	10	11
Quaternary Canal No.	Length of Canal m	Critical Field Level m	Distance of Field to box m	Minimum head loss m (4) x [5] min	Downstream Full Supply level m (3)+(5)+[4] + [6]	Division box Full supply level m (6)+ 3 + other losses	Groundlevel at Division box m	Final water level in Downstresm box m	Division box No.	Remarks

Note: (1) numbers in brackets ( ), indicate columns and in braces [ ], indicate values given in the heading.
(2) Column 7; other losses for culverts syphons and other structures should be added here.

Quaternary Canal and Division Box Waterlevel Design Form

Table No. 14.

[1] Standard Canal Cross Section b = 0.40 d = 0.30 m.
[2] Free board : 0.25 m
[3] Allowable Box head loss : 0.1 m
[4] Farm outlet head loss : 0.1 m
[5] Slope range : minimum = .0005 maximum = 0.0008 m/m
[6] Depth of water int he paddy: 0.15 m

Project:
Tertiary Unit:
Quaternary Unit:

1	2	3	4	5	6	7	8	9	10	11
Quaternary Canal No.	Length of Canal m	Critical Field Level m	Distance of Field to box m	Minimum head loss m (4) x [5] min	Downstream Full Supply level m (3)+(5)+[4] + [6]	Division box Full supply level m (6)+ 3 + other losses	Groundlevel at Division box m	Final water level in Downstresm box m	Division box No.	Remarks
5 Q 1	251	148.00	200	0.10	148.35	148.45	148.15	148.20	5D 1	
5 Q 2	690	145.00	-	-	-	-	-	-	-	
5 Q 3	436	143.50	100	0.50	144.25	144.35	143.95	144.00	5D 3	
5 Q 4	395	144.60	-	-	-	-	-	-	-	
5 Q 5	580	142.90	180	0.09	143.24	143.34	143.45	143.34	5D 5	
5 Q 6	639	140.00	220	0.11	144.36	144.46	144.20	-	-	
5 Q 6a	480	-	-	-	-	-	-	-	-	
5 Q 7	560	140.50	185	0.090	140.85	140.95	140.65	141.00	5D 7	

Note: (1) numbers in brackets ( ), indicate columns and in braces [ ], indicate values given in the heading.
(2) Column 7; other losses for culverts syphons and other structures should be added here.

Table No. 2.

Tertiary Drain Design Form

[1] Free board :
[2] Side Slope :
[3] Drain Discharge Coefficient :
[4] Irrigation Spillage :
[5] Design bed slope : maximum : minimum :

Project :
Tertiary Unit :

1	2	3	4	5		6		7		8	9	10	11	12	13	14
Drain No.	Drainage Area ha	Drain discharge l.p.s.	Irrigation Spillage l.p.s. (3)+[4]	Field level m		Water level m		Invert level m		Length drain m	Water Surface Slope m (7)-(8)	Design Slope m/m	Bed width - b - m	Water depth - d -	Outlet to Secondary drain No.	Notes
				u/s	d/s	u/s	d/s	u/s	d/s							

Table No. 2a.

Tertiary Drain Design Form

[1] Free board :
[2] Side Slope :
[3] Drain Discharge Coefficient :
[4] Irrigation Spillage :
[5] Design bed slope : maximum : minimum :

Project :
Tertiary Unit :

1	2	3	4	5		6		7		8	9	10	11	12	13	14
Drain No.	Drainage Area ha	Drain discharge l.p.s.	Irrigation Spillage l.p.s. (3)+[4]	Field level m		Water level m		Invert level m		Length drain m	Water Surface Slope m (7)-(8)	Design Slope m/m	Bed width - b - m	Water depth - d -	Outlet to Secondary drain No.	Notes
				u/s	d/s	u/s	d/s	u/s	d/s							
5 C 1	3.75	28.13	28	141.24	141.01	141.14	140.91	140.74	140.51	240	.23	0.0005	0.40	0.40	S 14	-
5 C 2	5.25	39.4	39	141.17	140.92	141.07	140.82	140.67	140.62	190	.25	0.0005	0.40	0.40	S 14	-
5 C 3	12.25	91.9	282	139.10	139.14	139.20	139.04	138.50	138.34	260	.16	0.0008	0.70	0.60	S 14	190 lps
5 C 4	21.00	157.5	348	139.10	138.8_	139.00	138.71	138.30	138.01	250	.29	0.0008	0.70	0.60	S 14	190 lps Irrigation Spillage.

Tertiary Division Box Design Form

Table No. 3.

[1] Division box Free board:
[2] Cill height factor:

Project:
Tertiary Unit:

1	2	3	4	5	6	7	8	9	10	11	12	13	14
Division Box No.	Canal Flow depth U/S of box m d_1	Invert level of box m d_2	Depth of box m d_3	Height of Cill m d_4	Canal No.	Full Supply level of D/S Canals m d_5	Head Difference (3)-(7) m d_6	Dimensions of Structure					Remarks
								L	h	W_1	W_2	W_3	

Note:
1. d_2 = Canal Flow depth U/S of box + [1]. Normally [1] = 0.30 m
2. d_3 = Canal Flow depth U/S of box - [2]. " [2] is not less than 0.10 m and not more than 0.25 m
   Cill heihgt should not be less 0.10 m not more than 0.25 m
3. d_1 and d_4 will corespond to data taken from the previous design form, the Quaternary Canal and Division box design Form
4. For the required dimension see Appendix 3.

APPENDIX 1.

The Principles of the Rotational Water Regulation System

The apportionment of water for irrigation is based on the simple relationship,

$$QT = DA$$

Q is the rate of flow of the water supplied to irrigate an area A in time T to a given depth D Assuming that Q is constant for a given period, then,

$$D \propto QT$$

and $$D \propto A$$

then $$T \propto A$$

or $$T = K.A.$$

And, K is a coefficient of proportionality. If Equal Time Rotation (E.T.R.) is going to be used with a Control Interval (C.I) taken as a fraction of the total Irrigation Cycle time. Assuming that the tertiary area A is divided into "a" separate sub-areas or sub-tertiary blocks, then the irrigation cycle time T will be divided into "n" periods too. Therefore, for the periods of T to be equal (E.T.R) the areas must be equal as well. This is known as the Equal Area Rule. The Control interval is the period between the beginning and the end of each time period that the irrigation cycle has been divided. The degree of refinement required in the control interval will depend on the accuracy of the regulating structures and the expertise of the operating personnel.

If some area/to be irrigated is supplied by a single turnout and divided into four sub-areas all equal in size, so that $a_1 = a_2 = a_3 = a_4$, assuming a constant Q, and taking into account the foregoing proportionality, T the total irrigation cycle time is divided into, T_1, T_2, T_3 and T_4 periods, then,

$$T_1 = K(a_1+a_2+a_3)$$

$$T_2 = K(a_2+a_3+a_4)$$

$$T_3 = K(a_1+a_3+a_4)$$

$$T_4 = K(a_1+a_2+a_4)$$

then $$\Sigma T_4 = K(3\Sigma A).$$

and $$K = \frac{\Sigma T}{3\Sigma A}$$

for a general case: where,

$$T_1 = \frac{\Sigma T(a_1+a_2+a_3)}{3\Sigma A}$$

and $$T_2 = \frac{\Sigma T(a_2+a_3+a_4)}{3\Sigma A}$$

and generally,

$$T = \frac{\Sigma T(A-a)}{(n-1)\Sigma A}$$

for "n" rotation units and "a" time periods.

This general equation holds good provided the proportionality factors are observed. In practice it has been found that the value of T should not be more than four days or 96 hours.

Some of the fundamental principles of the E.T.R. system will be given now and an explanation of some of the terms used.

Equal Area Rule

The equal area rule implies that E.T.R. can be applied at a sub-division with simple, open and shut regulation provided sub-division are of equal area. This is shown in the diagram Figure 1, indicating that the proportional division at TB for QB_1 and QB_2 for equal time distribution can only take place if $A_1 = A_2$ and $A_3 = A_4$, so that $A_1 = A_2 = A_3 = A_4$, however in practice it not possible to have areas exactly equal but the difference between the areas should not vary much more than 15%; however, with proportional division type regulators T.R. on any time basis can be used provided the equal area rule applies within the limits given above.

Irrigation Cycle

The irrigation cycle means the time space between successive applications of water and depending on the crops and seasonal climatic conditions. The cycle may be 5,7,10 or 14 days.

Control Interval

The control interval varies from infinity for continous irrigation to a few minutes for overhead systems. For surface irrigation systems with accurate gates and canal regulation and of large size with proper organizational control intervals of as little as

Figure 1.

Equal Area Rule.

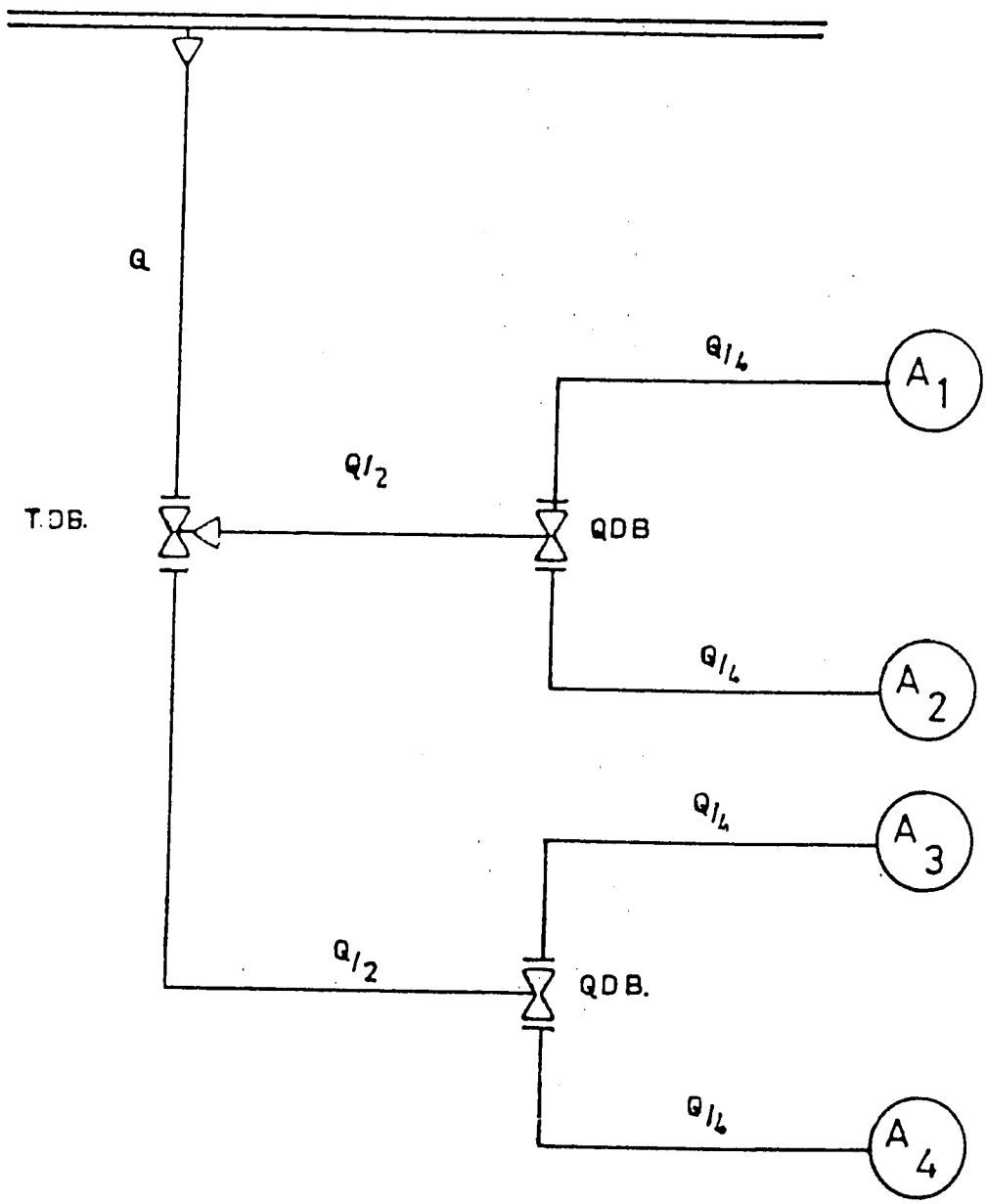

1. Proportional distribution can be practiced for Continuous flow when

$TDB = Q/2$ and $QDB = QDB = TDB/2$. (Note TDB = TB and ODB = QB)

2. Equal time distribution is only possible if all the areas are equal,

when $A_1 = A_2 = A_3 = A_4$. [Quaternary Unit areas]

3. Similarly, Tertiary areas should be approximately equal to obtain equitable distribution and regulation along the Secondary canals,

a 0.25 hours is possible but an eighth of a day (3 hours) would be a normal value for good wet paddy systems. This last value takes into account the limitations of the accuracy of metering devices and organization facilities.

Flow Rate

The flow rate or discharge into the tertiary unit is based on the unit crop water requirement derived from climatic data for each kind of crop. It is expressed in mm. (per unit area) and is converted into the gross unit water requirement which should include the anticipated irrigation efficiency and perculation losses and by the appropriate conversion factor converting it to a flow rate per unit area to obtain the field edge deliverly rate. The Tegal curve (see Tegal Curve, Appendix 4) should be used specifically for paddy irrigation design.

Division Box

The division box used in the tertiary system is possibly central to the control of the whole system. It's proper location and design facilitates the correct allocation of water to the respective groups of farm units in each quaternary block.

Two kinds of boxes can be used, simple open-and-shut gated box or a proportional division box. In the first kind no accurate measure can really be made while in the second kind proportional distribution can be achieved by making the width of the openings in the box proprotional to the discharge

required and cills being at the same level for all the openings. Both kinds of boxes are discribed in Appendix 4.

Box Ratio

The variation in box ratios can be obtained to permit rotation at the quaternary level. This can be explained by considering the diagrams in Figure 2 and the tables, which are self-explanatory. By taking three blocks simultanously, higher ratios will be required and taking two at a time a simple ratio of one-to-one is all that is required.

An Example of the Method of Calculating the Rotation Times and Capacities.

The application of the principles given in the foregoing section are best described by means of a comprehensive example. The example given here is taken from a working design for a tertiary unit on a large irrigation project.

This example demonstrates rotational supply at the sub-tertiary level rather than at the quaternary level. This would be satisfactory in the LNO case. However, it can also be worked out for rotation at a lower quaternary level by using the same principles. A layout of the tertiary system used in this example is shown in the drawing attached.

The following headings should be used in the design discription for each tertiary design. This information will be required by the field staff during the construction phase and later by the operating personel and it is essential for proper water allocation and project management.

Figure 2.

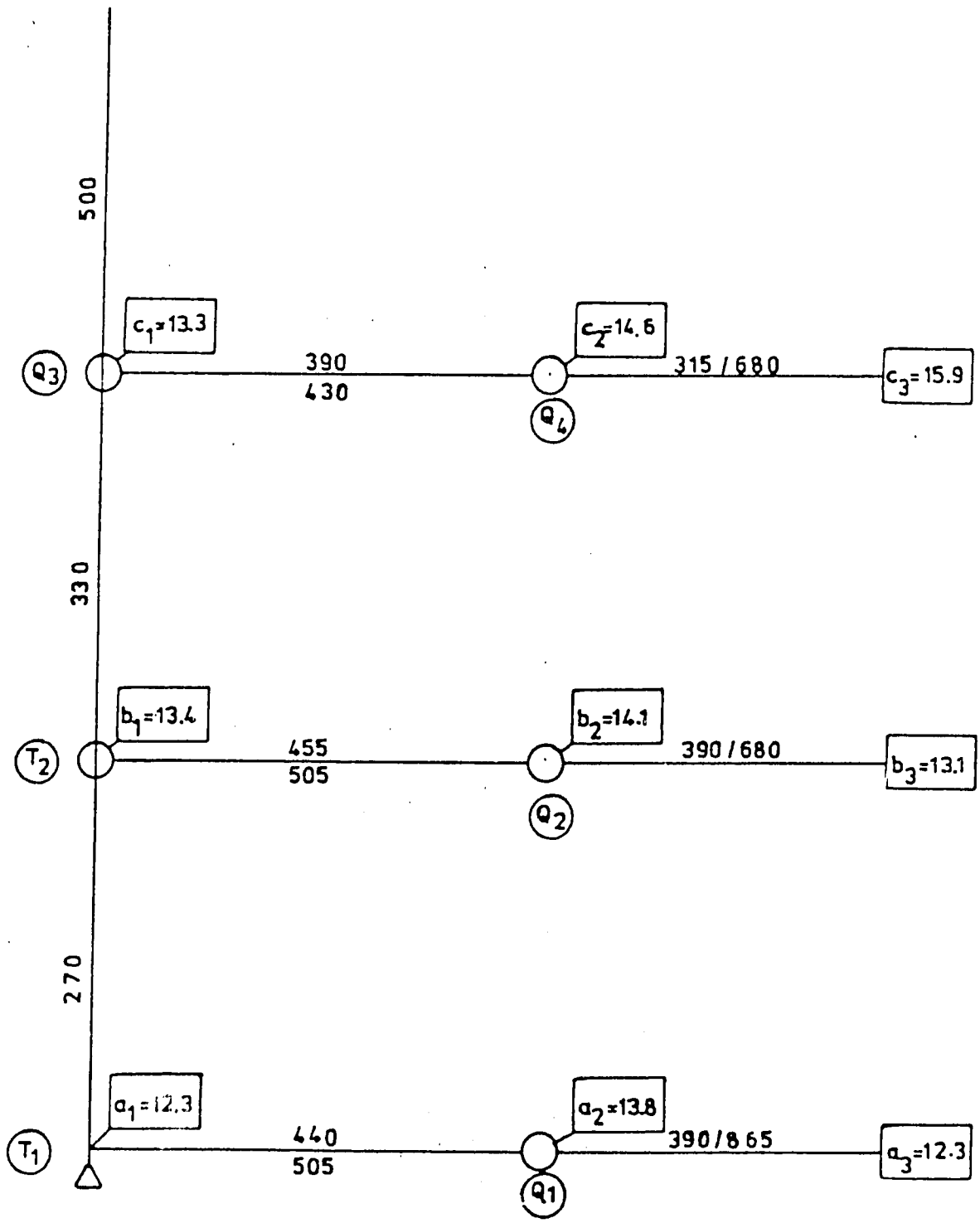

Layout Diagram.

Refer to Canal Dimension Table and Figure 3.

1.1 The Tertiary Unit Layout

The tertiary unit layout is shown in the plan in Figure 3. The area is divided into nine quaternary units of about 13 ha. each, the total area is 122.42 ha; the unit will be served by three sub-tertiary canals.

(a)	Quaternary Unit	a_1	=	12.25 ha
	" "	a_2	=	13.75 ha
	" "	a_2	=	12.25 ha
	Sub-tertiary Unit A		=	38.25 ha
(b)	Quaternary Unit b_1		=	13.73 ha
	" " b_2		=	14.08 ha
	" " b_3		=	13.07 ha
	Sub-tertiary Unit B		=	40.52 ha
(c)	Quaternary Unit C_1		=	13.25 ha
	" " C_2		=	14.55 ha
	" " C_3		=	15.85 ha
	Sub-tertiary Unit C		=	43.65 ha

1.2 Discription of the unit

The tertiary unit borders on the Tertiary canal D_1 to the south and the secondary drain. C_3 to the north. Tertiary Unit TU3 to the east and TU1 to the west.

1.3 Structures

The location of the structures are shown on the plan, they are.

- 2 Tertiary boxes, T_1 and T_2.

- 4 Quaternary boxes, Q_1, Q_2, Q_3 and Q_4
- 1 Tertiary culvert T_1 (Not shown)
- 5 Quaternary culverts Q_1, T_1-Q_2, Q_2 T_2-Q_3, Q_4 (Not shown)
- 9 drop structures (Not shown on the plan in Figure 3)

(Note the drop structure will be shown on the canal profiles)

1.4 Division Structures

Note that details of the division structures or turnout on the primary or secondary canal must be given under this heading. Any special conditions or characteristics must be stated under this heading too.

Full supply level:

Invert level:

Turnout discharge:

1.5 Farm Roads

Note, farm roads and other roads will be shown on the plan and on the canal cross section and any specific specifications will be mentioned under this heading. The total length of each kind of road must be listed in the tabulation of this kind:

Road	Width	Total Length
Access	—	—
Tertiary	—	—
Quaternary	—	—

1.6 Distribution Canals

The designation of the canals on which the turnout is located that supplies the tertiary unit should be given and any restrictions on the flow or prior used must be detailed too. This information is vital for water management planning.

1.7 Drains

The location of the primary or secondary drains into which the tertiary drains will discharge should be detailed here including factors that may influence designs and the water management of the tertiary block.

2.0 Rotational Sub-division of Water Supply.

The records indicate that rotational sub-division need not take place unless water supplies decrease to less than 60% of the normal flow, therefore full water supply will occur from 100% to 60% and further reduction will be considered from 60% to 30%. The irrigation cycle will be 14 days.

The control interval will be one hour.

The rotation times will be calculated for,

a) two sub-tertiary blocks being supplies at 60% to 30% of full supply on a 14 day cycle.

b) one sub-tertiary block being supplied at 30%, or less, of full supply on a 7 day cycle.

2.1 Sub-Tertiary Rotation

No rotational supply procedures will be used as long as water supply is available above 60%.

From 60% to 30% water will be apportioned to two blocks in a time sequence, thus,

(1) A + B*

(2) A + C

(3) B + C

The total time for a complete cycle is; 14 x 24 = 336 hours and applying the principles given in the foregoing section,

$$T = \frac{T(A-a)}{(n-1)\ A}$$

Then for pairs of tertiary blocks,

(1) A + B = 38.25 + 40.52 = 78.77 ha

$$T_1 = \frac{78.77}{122.42} \times \frac{336}{(3-1)} = 107.92 \text{ hrs.}$$

(2) A + C = 38.25 + 43.65 = 81.90 ha

$$T_2 = \frac{81.90}{122.42} \times \frac{336}{(3-1)} = 112.39 \text{ hrs.}$$

(3) B + C = 40.52 + 43.65 = 84.17 ha

$$T_3 = \frac{84.17}{122.42} \times \frac{336}{(3-1)} = 115.51 \text{ hrs.}$$

* Note that each block is divided into three quaternary units.

No.	Units Not Supplied		Rotation Units Supplied		Rotation Time	Notes
	Unit	Area ha	Unit	Area ha		
1	C	43.65	A + B	78.77	108	Total
2	B	40.52	A + C	81.90	112	area
3	A	38.25	B + C	84.17	116	112.42

The following tabulation shows the areas or units closed and the pairs of units supplied and the rotation times for each pair of units.
(Note that rotation times can be calculated for the quaternary units in a similar manner if rotations are to be used at that level).

2.2 Rotational Supply to Single Sub-Tertiary Units.

In this case it is assumed that only 30% of the total water supply is available and the cycle time will be 7 days, then the time for each block will be

(1) Unit A = 38.25 ha

$$T_1 = \frac{38.25}{122.42} \times \frac{168}{1} = 52.49 \text{ hrs.}$$

(2) Unit B = 40.52 ha

$$\frac{40.52}{122.42} \times \frac{168}{1} = 55.6 \text{ hrs.}$$

(3) Unit C = 43.65 ha

$$T_3 = \frac{43.65}{122.42} \times \frac{168}{1} = 59.90 \text{ hrs.}$$

These times will be shown in the time schedule.

3.0 The Canal Capacities

These calculations are based on a unit irrigation requirement of 1.4 l.p.s. per ha.

3.1 Capacity of 100% Supply

Unit	A	=	38.25 x 1.4	=	53.55	l.p.s
Unit	B	=	40.52 x 1.4	=	56.73	l.p.s
Unit	C	=	43.65 x 1.4	=	61.11	l.p.s
Totals:			122.42		171.39	l.p.s.

3.2 Capacities at 60% of Supply

Q = .60 x 171.39 l.p.s. = 102.83 l.p.s.

(a) Consider supplying the pairs of sub-tertiary units,

(1) A + B = $\frac{78.77}{122.42}$ x 102.83 = 66.16 l.p.s

(2) A + C = $\frac{81.90}{122.42}$ x 102.83 = 68.79 l.p.s.

(3) B + C = $\frac{84.17}{122.42}$ x 102.83 = 70.70 l.p.s.

The division of water supply to each unit is apportioned to each canal as follows;

(1) A + B = 78.77 ha

B = 40.52 ha

Sub-tertiary B = $\frac{40.52}{78.77}$ x 66.16

= 34.03 l.p.s.

(2) $A + C = 81.90$ ha

$A = 38.25$ ha

$C = 43.65$ ha

Sub-tertiary $A = \frac{38.25}{81.90} \times 68.79$

$= \underline{32.13}$ l.p.s.

Sub-tertiary $C = \frac{43.85}{81.90} \times 68.79$

$= \underline{36.83}$ l.p.s.

3.3 Capacity at 30% of Supply

$Q = 0.30 \times 171.39 = \underline{51.49}$ l.p.s.

As each unit will be irrigated in rotation on a seven day cycle this capacity does not exceed the capacity at other ratios and calculations for each unit will not be necessary. If the discharge at 30% had been greater separate calculation would be needed to estimate the capacity of each canal to determine if it exceeds capacities at higher ratios, which is possible.

Tables

The foregoing tables form part of the design drawings and are needed for the operation of the system after construction of the system. These tables are self-explanatory.

Drawings

The full set of standard drawings are not included here but they are listed in Part III of these guidelines.

Sub-tertiary Unit	Area ha	Canal Capacities l.p.s.*			Remarks
		100%	60%	30%	
A	38.25	53.55	32.13	51.49	30% not additive
B	40.52	56.73	34.03	51.49	
C	43.65	61.11	36.83	51.49	
Total	122.42	171.39	102.83	51.49	

Note: Canal Capacities must be able to convey the total volume of water during the land preparation period (L.P.P.). The actual capacity determinations based on the L.P.P. will vary seasonally.

Thus, being climatically dependant, the capacity will vary according to the cropping calendar. This factor will be discussed in a Technical Note on Crop Water Requirements and this example will be further examined. However, the Unit Irrigation Requirement used to determine the capacity under the conditions in this example is just sufficient to cover the L.P.P. If there is not enough water then there is the option of using the rotation period at 60% or even 30%.

Rotational Distribution Schedule

Rotation Condition	Continous Flow		Sub-tertiary Rotation 1		Sub-tertiary Rotation 2	
Allocation of Supply	100%-60%		60%-30%		30%	
Flow l.p.s.	171.39-102.83		102.83-51.49		51.49	
Day	Time		Time		Time	
Monday	06.00	Continuous Flow	06.00	A + B	06.00	Start
2					A	
3					10.00	
4					B	
5			18.00		18.00	
6					C	
7				A + C		
Monday					06.00	
2						
3			10.00		10.00	
4					B	
5				B + C	18.00	
6					C	
7						
Monday	06.00		06.00		06.00	Finish

Tertiary and Quaternary Canal Capacity Schedule

Canal	Area ha	Capacity l.p.s.			Canal Design Capacity
		100%	60%	30%	
C_2	14.55	20.37	12.30	17.16	20
C_3	15.85	22.19	13.40	18.69	22
$Q_3 - Q_4$	30.40	42.56	25.71	35.85	43
C_1	13.25	18.55	11.21	15.63	19
$T_2 - Q_3$	43.65	61.11	36.92	51.49	61
b_2	14.08	19.71	11.82	17.89	20
b_3	13.07	18.30	10.98	16.61	18
$T_2 - Q_2$	27.15	38.01	22.80	34.50	38
b_1	13.37	18.72	11.23	16.99	19
$T_1 - T_2$	84.17	117.84	70.95	51.49	118
a_2	13.75	19.25	11.55	18.51	19
a_3	12.25	17.15	10.29	16.49	17
$T_1 - Q_1$	26.00	36.40	21.88	35.00	36
a_1	12.25	17.15	10.29	16.49	17
$S_1 - T_1$	122.42	171.39	103.12	51.49	171

Note that no canal capacity shall not be less than 15 l.p.s.

Distribution Box Dimensions

No.	Tertiary Division Box	Quaternary Division Box	Box Outlets	Canal Capacity l.p.s.	h	b	Division box Sketch
1	T_1	-	a_1	17.15	0.15	0.20	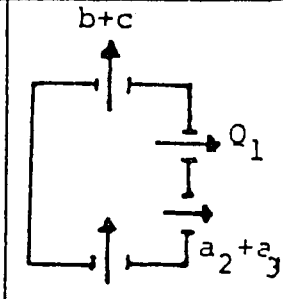
			$a_2 + a_3$	36.40	0.15	0.40	
			b + c	117.84	0.15	1.4	
2	T_2	-	b_1	18.72	0.16	0.20	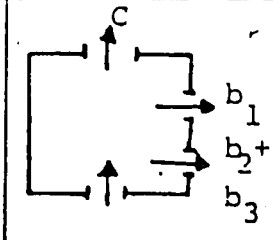
			$b_2 + b_3$	38.01	0.16	0.40	
			c	61.11	0.16	0.65	
3	-	Q_1	a_2	19.25	0.14	0.25	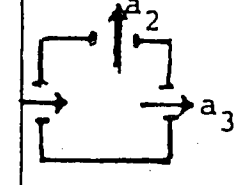
			a_3	17.15	0.14	0.20	
4	-	Q_2	b_2	19.71	0.16	0.20	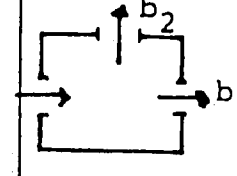
			b_3	18.30	0.16	0.20	
5	-	Q_3	c_1	18.55	0.16	0.20	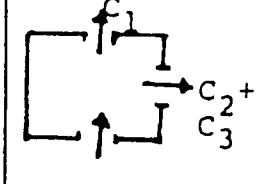
			$c_2 + c_3$	42.56	0.16	0.45	
6	-	Q_4	c_2	20.37	0.17	0.20	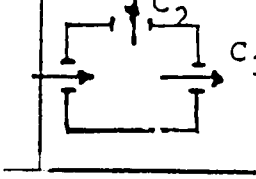
			c_3	20.19	0.17	0.20	

Note: 1. The width of the box opening is calculated by using the following equation

$$\text{Opening with} = \frac{Q}{1475\ h^{3/2}}\ ;\quad Q = \text{capacity in lps},\quad h = \text{head over the cill., m.}$$

2. These boxes correspond to the ungated type I. divisiion box in Appendix 4.

Canal Dimensions

No.	Canal	Capacity l.p.s.	b = d m	Velocity m/s	Slope m/m 10^{-4}	Length m	Side Slopes
	c_2	20	0.20	0.26	8	315	
	c_3	22	0.20	0.25	7	680	
	$Q_3 - Q_4$	43	0.30	0.23	4	430	
	c_1	19	0.20	0.29	14	890	
	$T_2 - Q_3$	61	0.35	0.23	3	330	
	b_2	20	0.20	0.26	8	390	All
	b_3	18	0.20	0.24	8	680	1:1
	$T_2 - Q_2$	38	0.25	0.29	6	505	
	b_1	19	0.20	0.27	10	455	
	$T_1 - T_2$	118	0.40	0.41	9	270	
	a_2	19	0.20	0.24	7	390	
	a_3	19	0.25	0.25	2	865	
	$T_1 - Q_1$	36	0.35	0.16	5	505	
	a_1	17	0.25	0.14	2	440	
	$S_1 - T_1$	171	0.50	-	-	-	

Total length of Canals 7145 m

Density of Canals 58 m/ha

Note: 1. These canal dimensions were taken from a standard graph of channel dimensions.

2. See Appendix 3 regarding the design of canals.

Drain Dimensions

No.	Drain No.	Length m	Capacity lps	Slope m/m 10^{-4}	b m	d m	Velocity m/s	Side Slope
1	a_1	695	83.30	3.5	.70	.35	.22	
2	a_1		83.30	15	.70	.25	.35	
3	a_2	750	176.80	4	1.85	.30	.27	
4	a_2		93.5	7	.50	.35	.31	
5	a_3	610	260.1	5	2.50	.30	.22	
6	a_3		83.3	14	.60	.25	.35	1:1
7	b_1	665	90.92	2	.75	.40	.19	
8	b_1		90.92	5	.60	.35	.27	
9	b_2	715	95.74	3	.65	.40	.22	
10	b_2		186.66	5	1.00	.40	.33	
11	b_3	755	343.98	15	.70	.50	.58	
12	b_3		275.53	8	1.15	.40	.44	
13	c_1	400	90.10	10	.55	.35	.22	
14	c_2	365	98.94	14	.50	.30	.40	
15	c_3	-	-	-	-	-	-	

Total length of Drains; 4955 m
Density of Drains; 40 m/ha

(Area 122.42 ha).

APPENDIX 2

Channel Design

In order that small unlined tertiary and quaternary canals remain stable and, require a minimum of maintenance, the design should be based on the principle of limiting the velocities in relation to the soils in which the canals are excavated. This can be simply achieved by using the Critical Tractive Force principles and limiting velocities within a range of Froude numbers.

Stable Channels:

A stable channel is one that may aggrade or degrade at a very slow rate and this degradation or scouring may take place up to a certain shear force. Above this shear force, called the critical shear force or critical tractive force, the channel degrades rapidly. The permissible tractive force is determined by the grain size diameter of the bed material. In channels with uniform flow the tractive force equals the components of the gravity forces acting on the water prism in the direction of flow,

$$T = \rho \; g. \; r. \; s.$$

where T = tractive force

ρ = unit weight of water, 1000 kg/m^3

g = 9.81 m/s^2

R = hydraulic radius

S = slope of channel

Figure 1

The Lane diagram relates the plasticity index of a soil to the maximum critical tractive force. The plasticity index can be measured in a laboratory but a good relationship between the total ion exchange capacity and plasticity index has been established and this may be used together with the table for the cohesiveness of soils.

However, the C.T.F. read off the Lane diagram will have to be correct for the b/d ratio used and the sideslopes to take into account the distribution of the tractive force along the sides and bottom of the channel. The maximum C.T.F. is adjusted by using the values given in Table 1. The larger of the two values is used because this gives the least tractive force at which erosion will begin. The adjusted C.T.F, T_1 is;

$$T_1 = \frac{T}{C\ max.}$$

The Froude number defines the nature of free flow conditions. In the case of earth channels it is desirable to maintain the flow regime as close to tranquil flow as possible. This can be achieved by maintaining velocities at Froude numbers between 0.1 and 0.3 for non-cohesive soils.

Channel Dimensions

The dimensions for a channel are usually obtained by using the Manning or Strickler equation,

$$V = K\ R^{2/3}.\ S^{\frac{1}{2}}$$

and $$Q = AV.$$

The value of K for small, straight aligned channels can be from 35 to 40.

Figure 1.

Lane Diagram

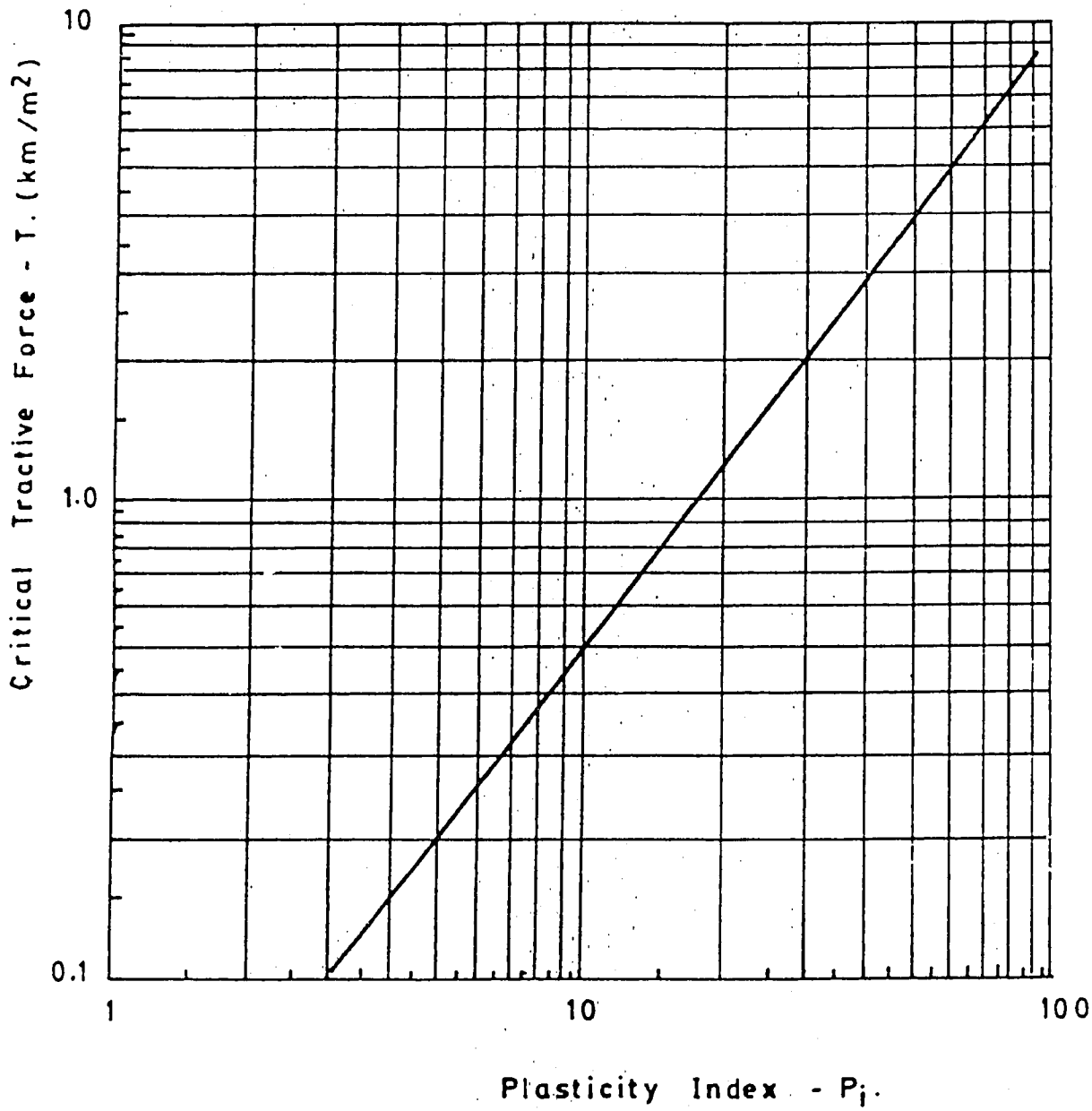

TABLE 1.

C.T.F. Correction Factors

b/d	Channel Side Slopes, Z					
	Channel Sides			Channel bed		
	1	1.5	2	1	1.5	2
1	.70	.70	.74	.80	.80	.80
1.25	.72	.72	.75	.84	.84	.84
1.50	.73	.73	.75	.86	.86	.86
1.75	.73	.73	.75	.88	.88	.88
2.0	.74	.74	.76	.90	.90	.90
3.0	.75	.75	.77	.95	.95	.95
4.0	.76	.75	.78	.95	.96	.96
5.0	.76	.76	.78	.975	.975	.975
>9	-	-	-	1.00	1.00	1.00

The ideal ratio of bottom width (b) to depth (d) is expressed as follows,

$$b = 2d \tan \frac{Z}{2}$$

This relationship is not always convenient for construction purposes and other ratios of (b) to (d) are used. A ratio of 1 to 1.25 has been found acceptable. Channel side slopes vary withthe kind of material in which the channel is excavated but 1 to 1 is used in this example. Other values may be substitued.

In designing small irrigation channels, only two values are normally given, the channel capacity (Q) and the fixed bed width-depth ratio. The depth and slope can be obtained in terms of the Critical Tractive force (C.T.F.) related to the soils and with in the limits of the Froude number (viz 0.1 to 0.20 or 0.30).

A worked example is given here rather than a more general case but such a general case is attached to the set of design tables that have been calculated by computer and which forms a part of these guidelines.

First, obtaining the depth in relation to the Froude number in terms of Q and b/d = 1.25

$$Fr. = \frac{V}{\sqrt{g\ D \cos S/\alpha}}$$

and $$V = Q/A$$

then, for a trapazoidal channel with 1:1 side slopes.

$$A = bd + d^2$$

$$= d(b+d).$$

substituting $b/d = 1.25$

$b = 1.25\ d$

then $A = d(1.25\ d + d)$

or $= 2.25\ d^2$

and $V = Q/2.25\ d^2$

The Froude number maybe deduced in terms of d, as well,

$$Fr = \frac{V}{\sqrt{g\ D.\ \ \cos S/\alpha}}$$

For the small slopes and flows the term Cos S/α maybe neglected, in these calculation. the error introduced will be very small.

$$D = \frac{A}{Tw}$$

$$Tw = b + 2d$$

$$= 1.25\ d + 2\ d$$

$$= 3.25\ d$$

and $A = 2.25\ d^2$

therefore $D = \dfrac{2.25\ d^2}{3.25\ d}$

$$= 0.6923\ d$$

then $Fr = \dfrac{V}{\sqrt{9.8067 \times .6923\ d}}$

$$= \frac{V}{2.606\ d^{\frac{1}{2}}}$$

subsituting for V,

$$Fr = \frac{Q}{2.606\ d^{\frac{1}{2}} \times 2.25\ d^2}$$

$$= \frac{Q}{5.8635\ d^{5/2}}$$

or $= \dfrac{0.1705\ Q}{d^{5/2}}$

and $d = \left[\dfrac{0.1705\ Q}{Fr}\right]^{2/5}$

Similarly the C.T.F. can be expressed in terms of Q and b/d,

$$T = \rho\ R\ S$$

$$R = \frac{A}{P}$$

$$A = 2.25\ d^2$$

and $P = b + 2d\sqrt{Z^2+1}$

substituting $b = 1.25d$ (1:1 Side slopes)

$$P = d(1.25 + 2\sqrt{2})$$

$$= 4.0784d$$

therefore, $R = \dfrac{2.25\ d^2}{4.0784\ d}$

$$= 0.5517\ d$$

The value of ρ is equal to 1000 Kg/m^3

then $T_1 = 551.7d.\ S.$

The slope S is obtained from the Strickler equation

$$Q = A.K.R^{2/3}S^{\frac{1}{2}}$$

$$= 2.25\ d^2.K\ (.5517d)^{2/3}\ S^{\frac{1}{2}}$$

$$= 1.5132\ K\ d^{8/3}\ S^{\frac{1}{2}}$$

taking $K = 40$

$$Q = 60.6\ d^{8/3}\ S^{\frac{1}{2}}$$

and $S = \left[\dfrac{.0165\ Q}{d^{8/3}}\right]^2$

and, by substitution,

$$T = 551.7\ d \left[\frac{0.0165\ Q}{d^{8/3}}\right]^2$$

and $$d = \left[\frac{.1503\ Q^2}{T_1}\right]^{3/13}$$

and $$T_1 = T/C\ max$$

The velocity and flow can be calculated by using the strickler equation with the following coefficients.

$$V = 26.9015\ d^{2/3}\ S^{1/2}$$

$$Q = 60.6\ d^{8/3}\ S^{\frac{1}{2}} \quad \text{and}$$

The slope from

$$S = \left[\frac{.0165\ Q}{d^{8/3}}\right]^2$$

The maximum depth is given by the equation and Fr = 0.1

$$d_{max} = \left[\frac{.1705\ Q}{Fr}\right]^{2/5}$$

$$= (1.705\ Q)^{2/5}$$

The minimum depth for the given Q will be obtained by using,

$$T_1 = 0.2/.84 = 0.2381$$

$$d_{min} = \left[\frac{0.1503\ Q^2}{T_1}\right]^{3/13}$$

$$= (0.6312\ Q^2)^{3/13}$$

The bed width is obtained by using the equation,

$$b = 1.25\ d$$

obtaining the bed width for the maximum and minimum depths

Similar reductions can be calculated by substituting the required values for the side slopes, K values or for different values for the Froude number or C.T.F. values. Some results the various factors for Channels with 1:15 side slopes are given below.

$$d_{max} = \frac{0.1444\ Q}{Fr}^{2/5}$$

$$d_{min} = \frac{0.1468\ Q^2}{T_1}^{3/13}$$

$$S = \frac{0.0161\ Q}{d^{8/3}}$$

$$V = 22.6560\ d^{2/3}\ S^{\frac{1}{2}}$$

Note that S max and S min and V max and V min are obtained by using the appropriate values of d from the first two equations.

Lam Nam Oon Project Factors

This method of designing channels can be applied to conditions on this project by considering the various factors pertaining to the project.

The Soils

The soils of the project are characterised by being composed of very fine loam sand almost devoid of clay; analysis of the soils indicate a fine fraction in the order of 10 to 15% in the top layer. But, the cation exchange capacity (C.E.C) is very low and for many soils seldom exceeds 10.0 in the top soil layer and in many cases, not above 4. This would indicate

that the fine fraction consists of kaolinitic clays, sesquinoxides of iron and aluminum and even very finely divided quantizic material (silica). Consequently, these soils are non-cohesive and above all very unstable when saturated.

The analysis of soils given in the E.C.I. Land Classification report, Appendix D, indicates that the clay content in the less than 2y.m.u.range centres around 10% in the top 0.50 m but this clay fraction is not very active, specifically the C.E.C. status. The plasticity index of this non-cohesive soils in probability in the order of 5 to 8 and the C.T.F. should not exceed about 0.2 to 0.35 at a maximum, see Table 2, and Figure 2.

Bed Width

Unlined channel sections always degrade into the natural regime section and seldom confine themselves to the original design sections. However, the depth of an irrigation canal must comply with certain specifications and, are, is that the depth must not be so far below ground-level that water can not be diverted into the fields. Greater bed width to depth - or visa versa - can lead to uneconomic sections and unsatisfactory hydraulic conditions.

The use of mechanical excavators requires that a fixed or even a minimum bed width coresponding to the width of the bucket being used. Using a fixed bed width with longer flows will lead to greater flow depths that may not give stable channal sections nor stable hydraulic conditions.

TABLE 1.

Classification of the Cohesiveness of Soils

Class	Clay Fraction (<2M)	Plasticity Index
Cohesionless (loamy sand)	0-2	< 1
Slightly cohesive (Sandy loam)	2-10	1-10
Medium cohesive (loam to loamy clay)	10-20	10-20
Cohesive (Clay loam to medium clay)	20-30	20-30
Very cohesive (clays to heavy clay)	30-100	> 30

Figure 2.

CEC - Plasticity Index Diagram.

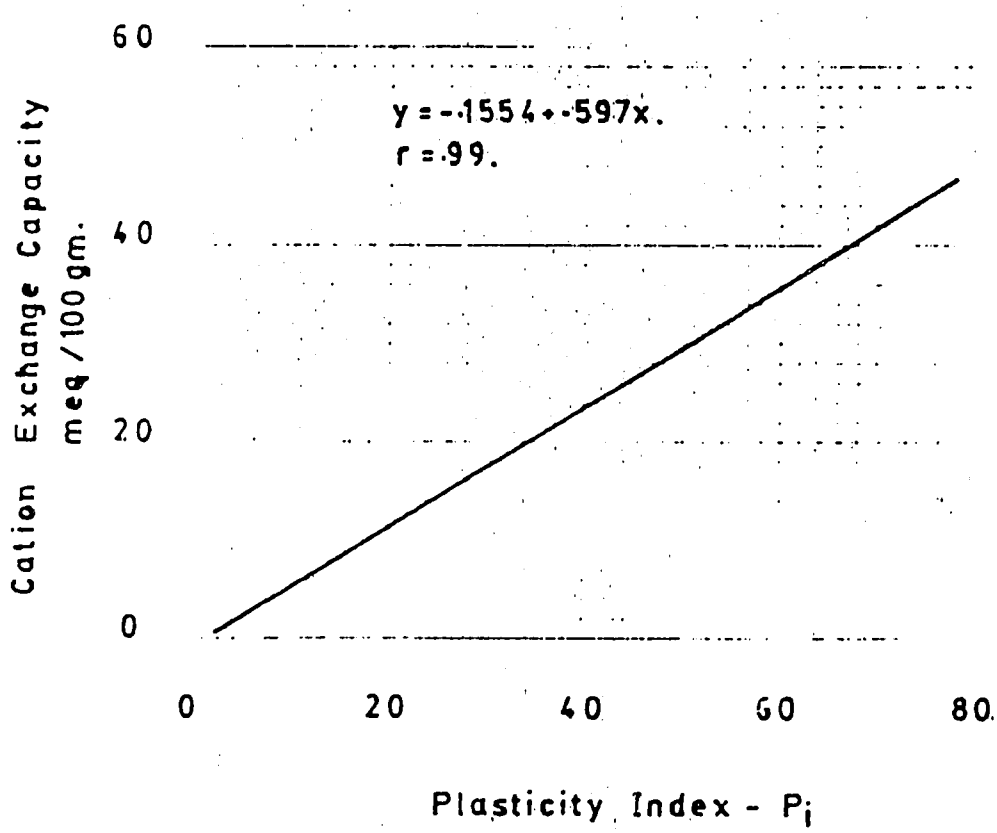

However, the foregoing equations may be derived to take the fixed bed width into account.

Application of Method

The foregoing equations are simple enough to be used by a non-programmable scientic calculator and they where originally derived for this purpose. However, they have since been programmed for a TI. 59, HP 67/97.

A simple programme for the HP 97 is included in this appendix, in Figure 3.

It should be noted that applying this method the values of the C.T.F. should correspond to the materials of which the canals are to be constructed. This is an important point to bear in mind.

A complete set of tables, including a range of the C.T.F. number, has been compiled. It is available separately as a handbook.

Example

The equations used to calculate the required channal dimensions are given for the single input parameter, the discharge Q.

Assume $Q = 125$ lps ($.125\ m^3/s$)

$Fr = 0.1$

$T = 0.2$

$Z = 1$

1. <u>Depths</u> b/d = 1.25

a. Maximum depth

$$d\ max = \left[\frac{.1705\ Q}{Fr}\right]^{.4}$$

$$= \left[\frac{.1705 \times .125}{0.1}\right]^{.4}$$

$$d_1 = \underline{0.5388}\ m$$

b. Minimum depth

$$T_1 = .20 \quad .84$$

$$= 0.238\ depth$$

$$d\ min = \left[\frac{.1503\ Q^2}{T_1}\right]^{.2309}$$

$$= \left[\frac{.1503 \times .125^2}{.2381}\right]^{.2309}$$

$$d_2 = \underline{.3442}\ m$$

2. <u>Bed Width</u>

$$b = 1.25\ d$$

$$b_{max} = 1.25 \times .5388$$

$$= \underline{0.67}\ m$$

$$b_{min} = 1.25 \times 0.3442$$

$$= \underline{0.4303}\ m$$

3. <u>Velocity</u>

a. Maximum Velocity

$$V = \frac{Q}{2.25\ d^2}$$

$$= \frac{.125}{2.25 \times .3442^2}$$

$$= 0.4689 \quad m/s$$

b. Minimum Velocity

$$V = \frac{Q}{2.25\ d_1^2}$$

$$V = \frac{.125}{2.25 \times .5388^2}$$

$$= 0.1914 \quad m/s$$

4. <u>Slope</u>

a. Maximum Slope

$$S = \left[\frac{.0165\ Q}{d_2^{\ 2.6667}}\right]^2$$

$$S = \left[\frac{.0165 \times .125}{.3442^{2.667}}\right]^2$$

$$S = \underline{0.0013} \quad m/m$$

b. Minimum Slope

$$S = \left[\frac{.01605\ Q}{.5388^{2.6667}}\right]^2$$

$$= \underline{0.00011} \quad m/m$$

The result of these calculations are summarized in the table following.

TABLE 3

Canal Dimensions for b/d = 1.25 Side Slopes 1:1

	Capacity m^3/s	Velocity m/s	Slope m/m	Depth m	Bedwidth m
Max (1:1)	0.125	0.4689	0.0013	0.3442	.43
Min (1:1)	0.125	0.1914	0.00011	0.5388	.67

Reference:

Coles. E.D; El Fayoumi, A.M. The Design of Quaternary Canals. (Submitted for publication) Journal Inst. Agricultural Engineers. U.K. 1979.

It is obvious that these calculation can be made with a simple calculator.

Symbols

A = cross sectional area, m^2

b = bed width, m

C = correction factor (see Table)

d = depth, m

Fr = Froude number

g = gravity, 9.8067 m/s^2

K = roughness factor

m = metres

P = wetted perimeter

P_i = Plusticity index.

Q = capacity or flow m^3/s

R = hydraulic radius

S = gradient or slope m/m

T = C.T.F. - critical tractive force

T_1 = adjusted C.T.F. (T_1 = T/C max)

T_w = Top width

V = velocity

Z = channel side slope

ρ = unit weight of water 1000 Kg/m^3

α = energy coefficient

APPENDIX 3

Types of Division Boxes

Although division boxes of great complexity can be used incorporating automatic devices that require constant adjustment and frequent maintenance, such structures are not needed at Lam Nam Oon and simpler and more reliable structures will be described here.

Two kinds of division boxes will be described,

a) Proportional division box with flap gates.

b) Simple proportional box with lift gate (open & shut type)

The layout of the various kinds of division boxes are given in the drawings to follow, showing various modifications required to suit certain circumstances occurring in the field.

The design factors pertaining to the various parts of the division box are discussed.

The Water level Differential

The difference between the water level in the box and the downstream canal should be not less than 0.10 m in order to maintain a reasonable flow out of the box.

The Cill

The cill height is maintained at a height above the box invert level of not less than 0.10 m and not more than 0.25 m.

The crest shape coefficient may be taken as 0.88 for square edged crests but if the inner edge is rounded the value will be 1.0, however for these designs a value of 0.88 is used.

If the head is measured at the entrance to the box then the velocity head factor can be neglected but if it is measured at the outlet then it must be included in the calculation. The width may be estimated by using the following equation

$$b = \frac{Q}{.88 \times 1.7051\, H^{3/2}}$$

or

$$b = \frac{0.6665\, Q}{H^{3/2}}$$

where Q is in m^3/s and H in metres.

This equation may be used for estimating the width of the flap gate openings but there will be a small degree of error because of the variation in dimensions and a separate estimate should be made by direct measure of the finished field model.

Box Dimensions

The box dimensions may be calculated by means of the equations shown in Figure 1.

The width of a box fitted with flap gates varies with the number of gates used. With the boxes fitted with simple lift gates a minimum width of 1.0 m plus the width of the gate applies. The width is taken to be the least dimension a

right angles to the inlet canal.

Stilling Basin & Transitions

The dimensions of the stilling basin below a drop, whether the drop is combined with the division box or separate, maybe estimated by means of the dimension variables given in the following table. This table should be read in conjunction with Figure 1 and the Tertiary Division Box Design Form, Table 4, guidelines Part III.

It should be noted that differences in the box water level and the downstream canal, of 0.30 or less, will not require a transition beyond the stilling basin and the stilling basin length will be three times the head difference or a minimum length of 0.75 m and a minimum depth of 0.10.

Construction Materials

These structures are hydraulic structures and they are subject to a number of forces acting in a different way. First,they should be constructed of sound material; good quality rock and properly constituted concrete, if not, they will require constant and costly maintenance. Secondly, they must be accurately constructed according to designs, failing to do this will negate the purpose of the design and will result in problems concerned with water management as well as increasing maintenance costs.

Division Box Design Dimension.

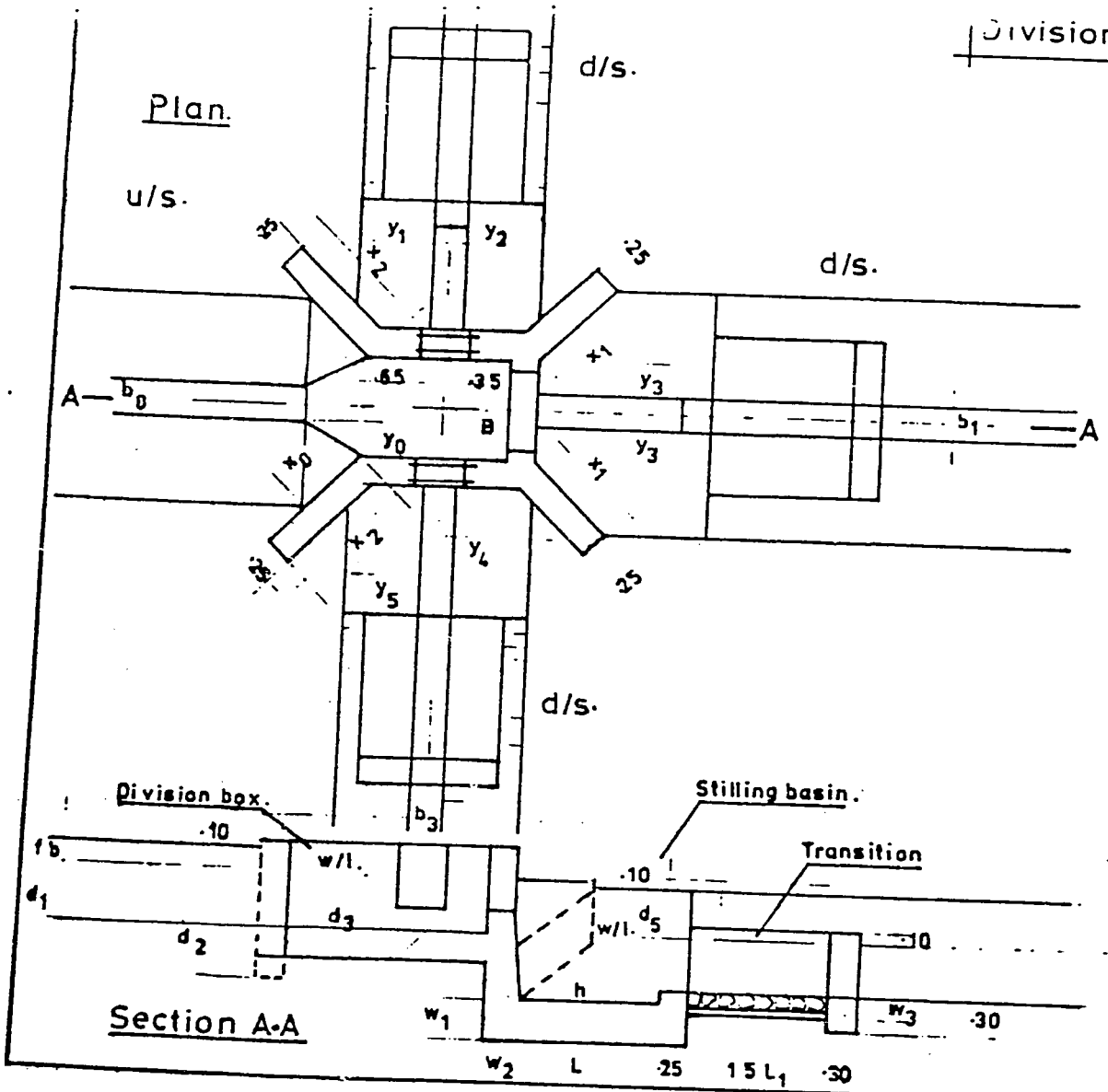

Division Box Design Factors.

$x_0 = [d_1 + fb - (\frac{B - b_0}{2})] \sqrt{2}$

$x_1 = x_1 = (d_4 + fb - y_3) \sqrt{2}$

$x_2 = x_2 = (d_4 + fb - y_4) \sqrt{2}$

x = wingwall dimensions (check all dimensions and use largest values.)

d_1 = upstream water depth.
d_2 = depth of u/s toewall.
d_3 = crest level above box floor.
d_4 = downstream water depth.
d_5 = difference between u/s and d/s water levels.
B = box width; B_{min} = gate width + 45 + (2 × 10).
b_0 = u/s bed width.
b_1 = d/s " "
fb = freeboard.
y_n = distance from edge of canal bed to inner edge of box + 1/ wall thickness.
(Other dimension given in table in text.)

In boxes to be fitted with flap gates, the water level should be maintained at 0.25 m and not less than 0.20 m. The level can be achieved by maintaining the water level (full supply level) in the canal at a fixed depth, for example, at 0.35 m; the water level over the cill is 0.25 and the cill height is 0.10 m. However, it may not always be practical to maintain the required water in the canal and the gate width will have to be modified.

For boxes with simple gates the cill height should not be less than 0.10 m.

The Outlet Dimensions

The volume of water flowing out of the box into the downstream canals will depend on the head over the outlet (depth of water in the box minus the cill height) and the width of the outlet both the depth and the cill height are constant for each box and the width of the outlet is varied to allow the required volume to be discharged.

An equation for estimating the discharge through a box outlet is

$$Q = 0.385\ m.b.H\ \sqrt{2gh}$$

or

$$Q = 1.7051\ m.b.H^{3/2}$$

where Q = discharge in m^3/Sec.

m = crest shape coefficient

b = width of outlet m....

$H = h + v^2/2g$

Figure 1.

Stilling Basin and Transition Dimensions.

d5	l	1.5 L_1	h	W_1 (1)	W_1 (2)	W_2 (1)	W_2 (2)	W_3
0.30	0.75		0.10	.25	.15	.25	.10	0.15
.30	.90		.10	0.30	.15	.25	.10	.20
.45	.90		.10	.30	.15	.25	.10	.20
.50	.90		.10	.30	.15	.30	.10	.20
.60	1.00		.10	.35	.15	.30	.15	.20
.70	1.10		.15	.35	.15	.30	.15	.20
.80	1.10		.15	.35	.20	.35	.15	.20
.90	1.20		.15	.40	.20	.35	.175	.20
1.00	1.20		.15	.40	.20	.40	.175	.25
1.10	1.20		.15	.40	.20	.45	.20	.25
1.20	1.30		.15	.40	.25	.50	.20	.25
1.30	1.40		.20	.50	.25	.50	.25	.25
1.40	1.45		.20	.50	.25	.55	.25	.25
1.50	1.45		.20	.50	.25	.50	.25	.25

d5 difference between box water level and downstream canal water level

L length of stilling basin

L_1 length of transition

h height of stilling basin cill

W_1 Thickness of stilling basin floor and box floor.

W_2 Thickness of vertical drop wall

W_3 Thickness of masonry of grouted stone pitching.

(1) Grouted masonry or mass concrete with large rock plums.

(2) Concrete with two layers norminal reinforcement.

(37)

Figure 2.

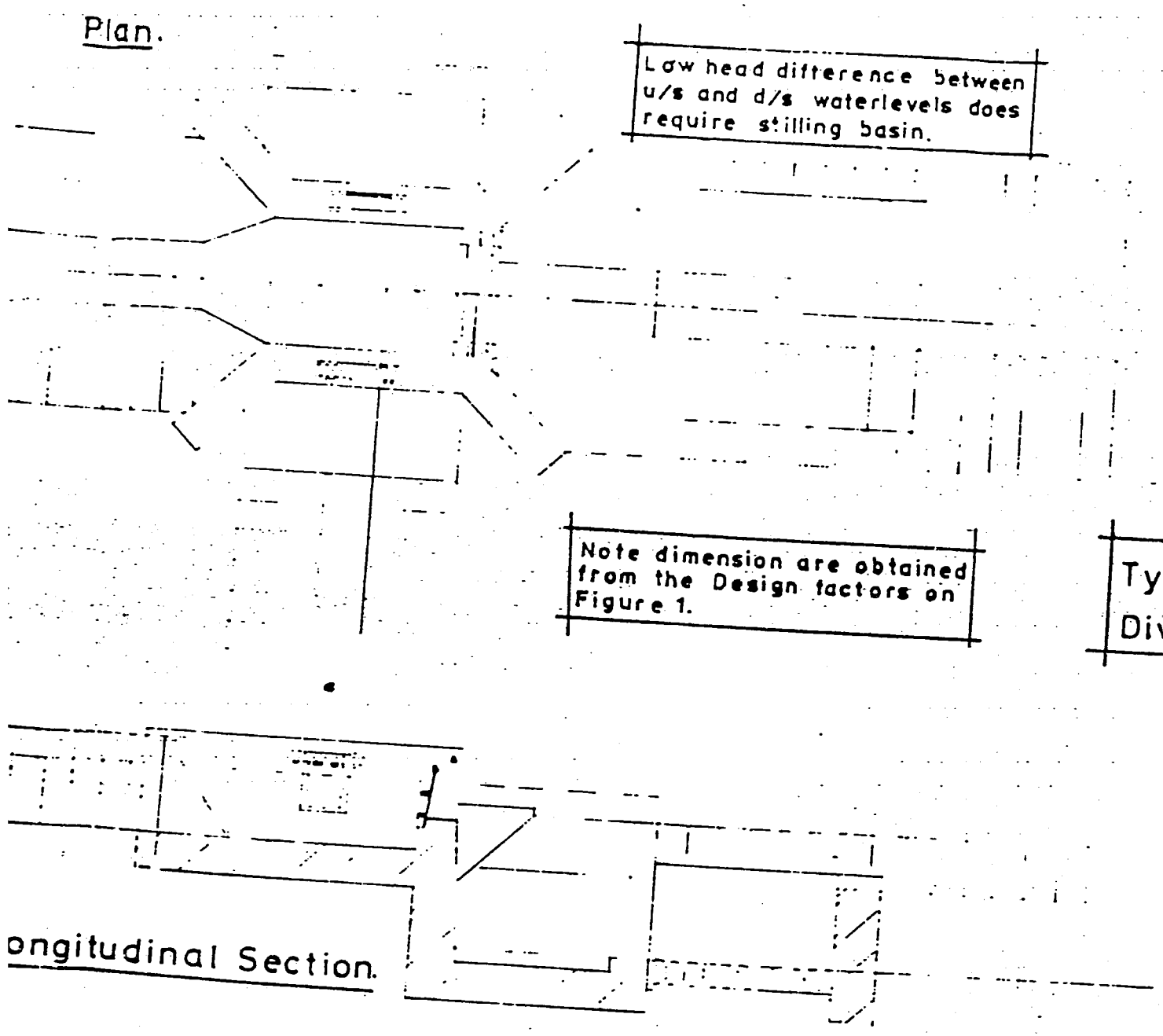

Typical Proportional Division Box with Flap gates.

Where good quality rock is available such structures can be constructed of grouted masonry or mass concrete with large rock plums. Otherwise, reinforced concrete may be used.

Design Drawings

Figure 2

The design in Figure 2 applies to a division box fitted with flap gates that provide a simple method of regulating the flow proprotionally to the different dowrsteam canals. The types of flap gates used are shown in Figure 4. The design dimensions can be worked out from the equations given in Figure 1.

Figure 3 (a)

The division box shown here is fitted with simple open-and-closed lift gates. The dimensions of this structure can be determined by using the data given in Figure 1. The width of the outlets are obtained by using the equation given in the foregoing section.

$$b = \frac{0.6665\ Q}{H^{3/2}}$$

Figure 3(b)

This particular design has rounded inlets to the box and to the outlets to canals. It also has long throat sections before the cill. The reason for this is an attemp to reduce turbulance and reduce erosion at the entrance to the earth canal. This design is satisfactory but requires more materials that the former designs.

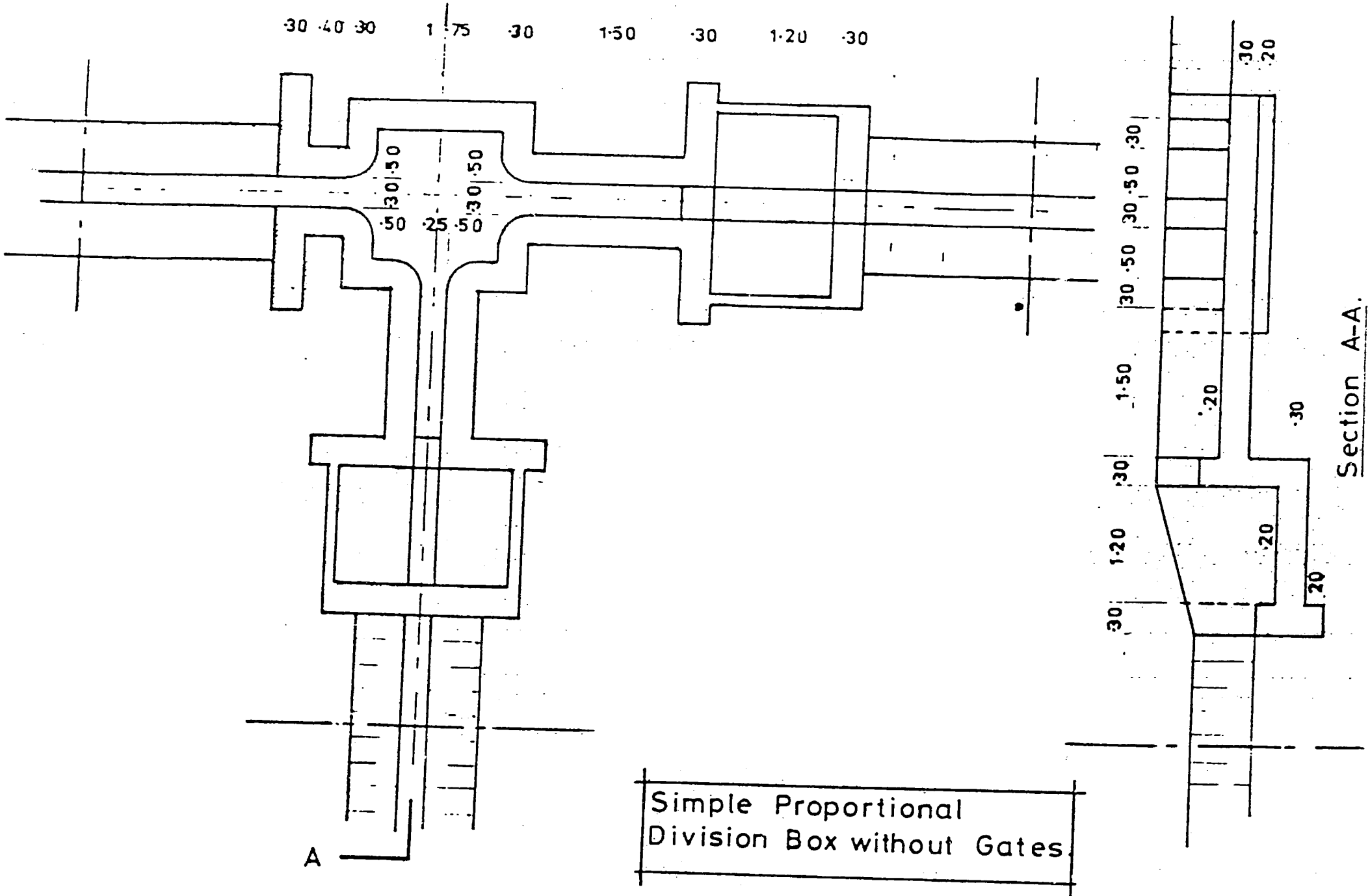

Simple Proportional Division Box without Gates

Figure 3(c)

This design is basicly the same as Figure 3 (b) but the outlet incorporates and "onion", type transition. The object of this method is to excavate the earth to its natural angle of repose the transition. This procedure does work satisfactorily but takes up to much land where longer flow are encountered.

Figure 4

The details of the flap gates used for the division box described and shown in Figure 2.

Figure 3c.

Division Box with Onion Canal Inlets.

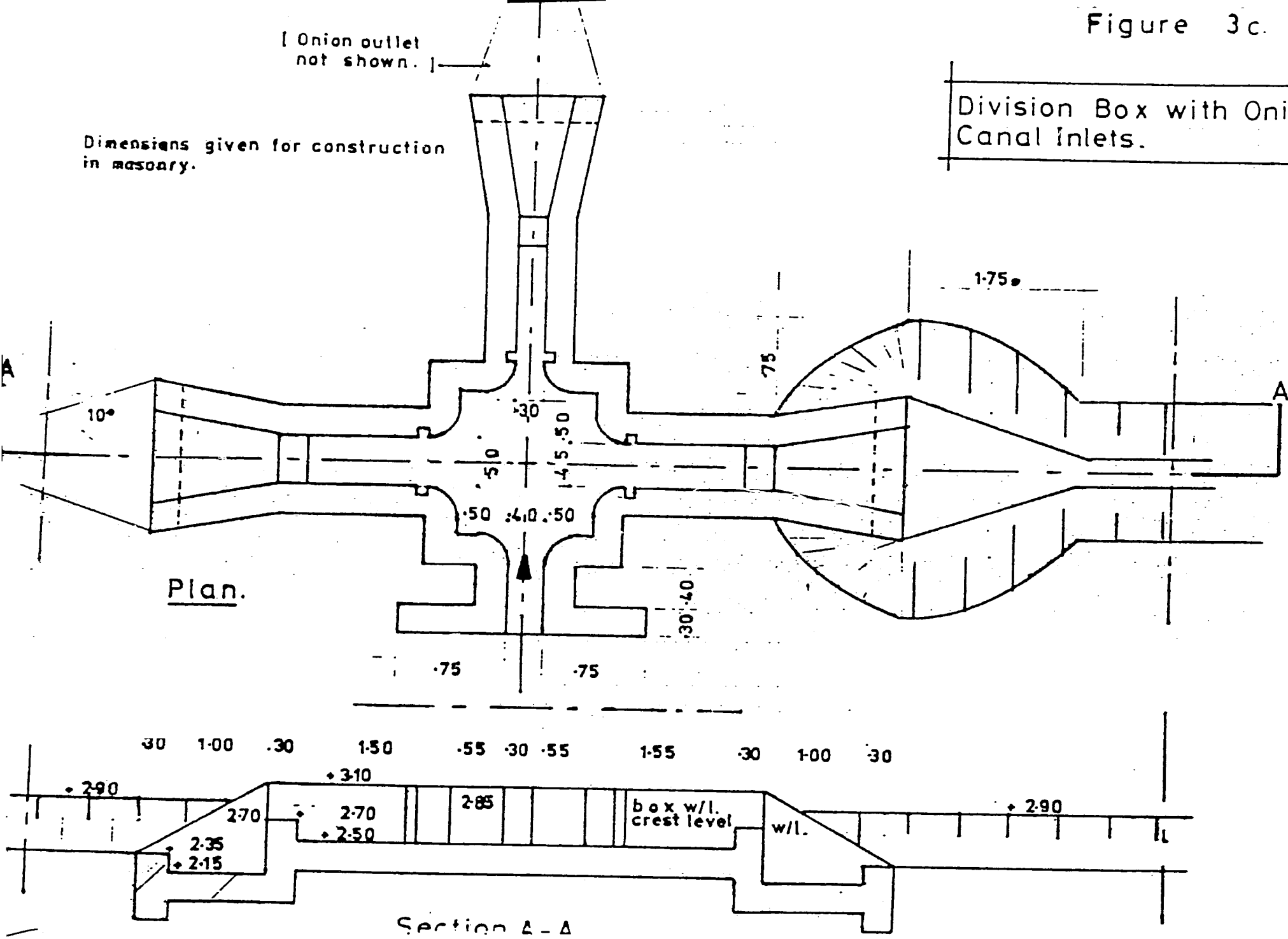

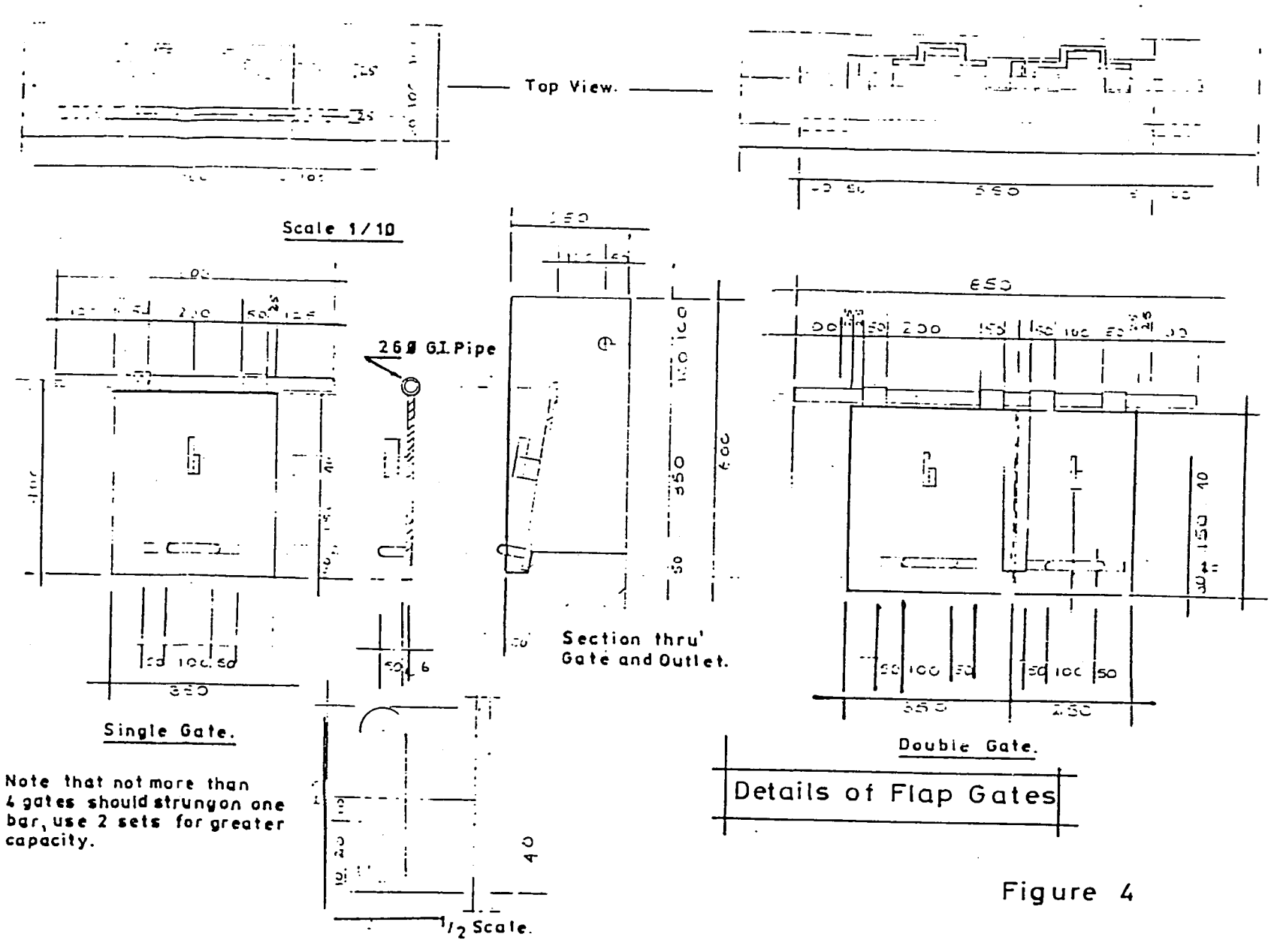
Top View.
Scale 1/10
26ø G.I. Pipe
Section thru'
Gate and Outlet.
Single Gate.
Double Gate.
Details of Flap Gates
Note that not more than
4 gates should strung on one
bar, use 2 sets for greater
capacity.
1/2 Scale.

Figure 4

APPENDIX 4

Canal and Drain Capacities

Canal capacities are based on maximum unit irrigation water requirements and this amount is derived from the periodic crop water requirements for the project area or for the 1 in 5 year return period of low rainfall for either wet season paddy or for dry season paddy, if rice is to be grown during the dry season. Although it is necessary to determine unit water requirements for other crops, usually the canal capacities are based on the water requirements for rice which requires larger amounts of water. Design capacities based on requirements for rice are adequate for other crops.

The design capacity of canals has to include an additional factor for the effects of diversification during the distribution of water within the paddy system.

The curve given in Figure 1 can be used for this purpose. The equation used to calculate the design flow is,

$$Q_1 = C \quad A \quad q + \text{losses}$$

where Q_1 = design capacity lps/rai

C = redistribution factor taken from the curve

A = total area to be irrigated along tertiary of quaternary canal, rai

q = unit water requirement l.p.s/rai

losses = transmission losses

Figure 1.

Tegal Curve.

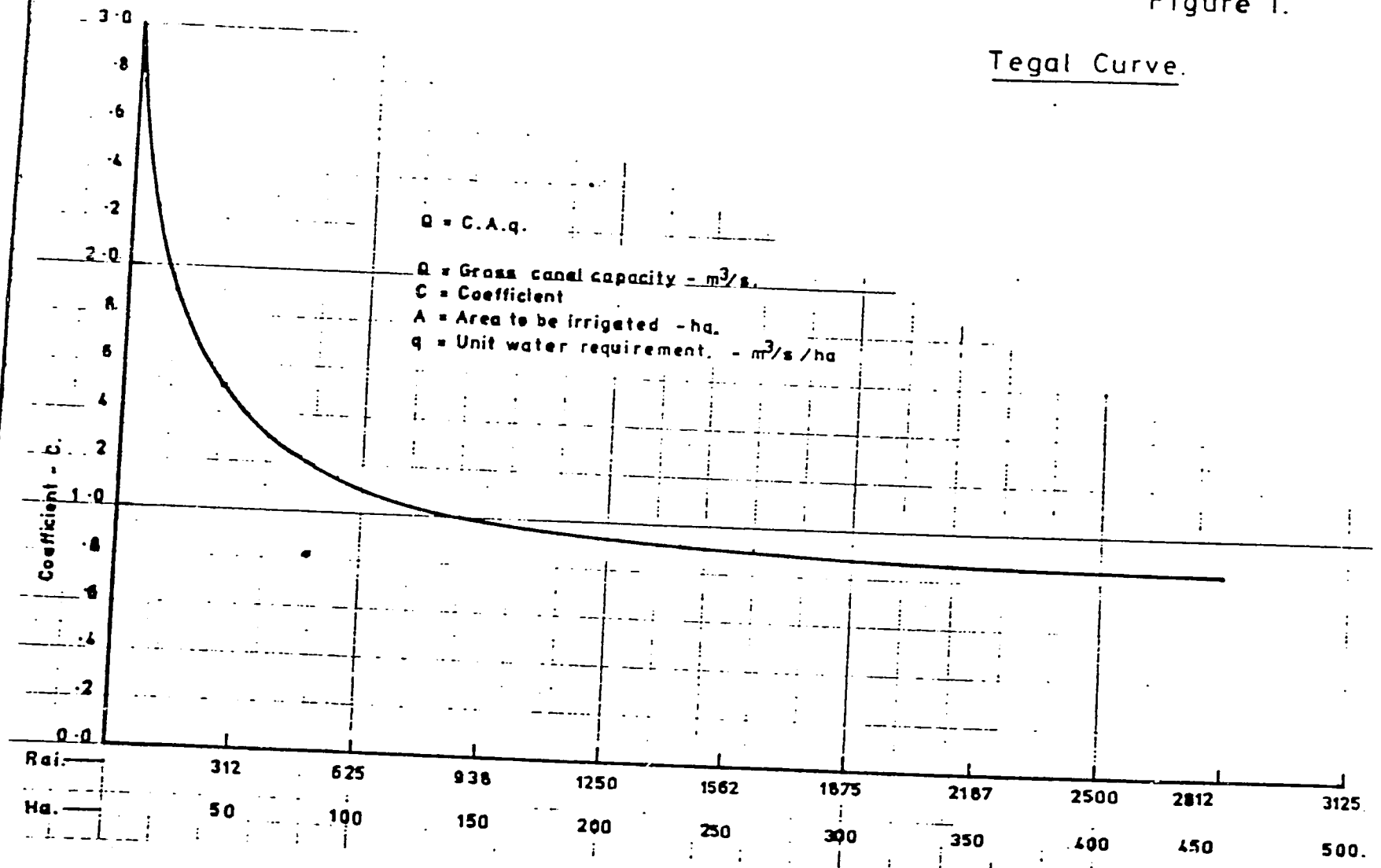

Example:

$Q = 0.3$ l.p.s per rai

$A = 256$ rai

$C = 1.5$ (from curve)

$L = 1100$ m

$Q_1 = 1.5 \cdot 0.3 \cdot 256$

$= \underline{115.2}$ l.p.s.

Losses $= 0.015 \times \frac{1100}{1000} \times \left(\frac{115.2}{1000}\right)^{.4}$ (see equation below)

$= 6.95$ l.p.s.

$Q_1 = 122.15$ l.p.s.

Transmission Losses

Transmission losses in small canals may not be important in small, short canals but in porous soils an estimate of the losses should be included; the following equation maybe used for the project conditions

$$\text{Losses} = 0.015\ L.\ Q^{.4}$$

where L = length of canal in Km.

Q = capacity in m^3/s.

Losses = m^3/s

Unit Water Requirements

The basis of the unit water requirements is the crop water requirements which are based on the analysis of the climatic parameters and the rainfall. This data will be presented in another Technical Note shortly.

Drainage Discharges

The drainage of storm water and surplus irrigation water is termed irrigation spillage. Storm water drainage is based on the 10 or 20 year reoccurring interval of storm rainfall and the possible intensity of the second highest rainfall reoccurring once in 10 years.

However, flood estimation may be based on an estimate of an extreme value of the daily point rainfall within a selected return period. This form of analysis is suitable for most agricultural drainage work. Such analysis is now underway and will be provided in a separate Technical Note.

NOMENCLATURE

Crop Water Requirements.

The crop water requirement is the gross water needed to sustain the specific crop plant over the entire growing season. However, this is a product of the incremental water applications over the period related to climate and soils. (See unit irrigation requirement.)

Command Area.

This term is frequently used to designate the gross area supplied by a primary or secondary canal (within the major system). - See Service area.

Division Boxes.

A division box is used to

(1) proportionally divide the flow of water into two or more channels and;

(2) to regulate the flow into the channels supplying separate groups of farm units.

The structures are nominally square or rectangular; the rectangular outlets may be fitted with adjustable gates to regulate the discharge or simple open-and-shut gates are used to control the discharge. These structures may be constructed of masonry, mass concrete or reinforced concrete.

The division box is the key to proper water control at the minor system water management level.

Extensive - Intensive.

In R.I.D. parlance "Extensive" refers to irrigation development under the Farm Dyke & Ditch Act and "Intensive" refers to development under the Agricultural Land Consolidation Act.

Farm Ditches.

Refers to small furrows conveying water about the farm or the fields. A more clear term is "farm furrow" or "field furrow."

Furrow.

Specifically specifies a small capacity man-made channel for conveying water around the farm or field.

Farm Turnout.

A structure, either a gated device or a simple pipe through the canal bank, used to divert water on to the farm.

Farm Units.

Farm Units refer to a single bound area of farm land supplied with water or any other commodities irrespective of the ownership (one owner may own more than one Farm Unit).

In-field (System)

The term "In-field" is specific in the Western farming context where an irrigation system, for example, the furrow method would be used for new crops, overhead sprinkler for alfalfa and trickle irrigation for fruit trees; while in the main rice growing regions with small farm units, wet paddy (systems) would be more appropriate and bedding (systems) where upland crops are grown in paddy fields. It is equivalent to a single paddy field (See On-farm).

Land Consolidation.

(1) Land Consolidation refers specifically to the aggregation of fragmented land holdings into economic farm units.

(2) Land Consolidation in the Thai context implies the develop-

ment of land together with the aggregation of fragmented land holdings under the Agricultural Land Consolidation Act.

Land Development.

This refers specifically to effecting physical modifications to a farm unit or larger areas consisting of groups of farms to improve crop production by providing necessary farm inputs and infrastructure. However, such improved performance should be within the realms of economic reality.

Major System.

The "Major System" of an irrigation project consists of the Primary and Secondary conveyance system (or network) and diverts water into the tertiary system. The operation and maintenance of this part of the project is normally the responsibility of the project authority, a ministrial agency.

Minor System.

The "Minor System" consists of the tertiary and quaternary conveyance system. This system conveys water about the farm groups (tertiary units or blocks) and delivers water to the farm groups (quaternary units).

This system is managed by the farmers through some kind of farmers organization, who also take care of the maintenance of the system.

On-Farm.

This term refers to an irrigation system on a farm and it is roughly equivalent to the quaternary unit in the Asian context. It is more applicable to larger farm holdings than to the small farm

units occurring in Asia.

Primary Canals.

The primary canals, also referred to as a high-level canal, main (- distributary) amongst many other names, is the main conveyor of water from the diversion headworks, from a reservior or river or even from a pump, to bifurcate into the secondary canals. Normally, water is not diverted to farms directly but may be diverted into the tertiary system.

Quaternary Canal.

The Quaternary canal starts from the tertiary division box and supplies water to the individual farm units. It is the only canal the farmer has direct access to in the "Tertiary Irrigation System" concept.

Secondary Canal.

The Secondary canal branches off the Primary canal and water is diverted into the tertiary system by means of various kinds of turnouts.

Service Area.

The term is non-specific but is sometimes used to refer to the Tertiary or Quaternary area and in the same way as Command Area.

Service area does mean the area taken up by services such as farm roads, access roads and canal servitudes.

Tertiary Canal.

The Tertiary canal is supplied by water from the secondary canal by a turnout and conveys the water to a division box bifurcating into

a sub-tertiary or quaternary canals. Farmers do not have access to this canal though the farmers organization is responsible for maintaining it.

Turnouts.

A turnout is a small type of diversion device which is also able to measure the volume of water being discharged through it. The device consists of an overflow weir that can be raised and lowered and a shut-off gate (the Vlygter turnout) or a pair of gates (constant head turnout) or a simple gated pipe. These are located on the inside of the canal and a pipe under the embankment conveys water into the subsidiary canal.

Unit Irrigation Requirements.

The Unit Irrigation Requirement is the crop water requirement at the maximum level plus the irrigation efficiency (at the anticipated level of inefficiency) and any field percolation losses. The maximum crop water requirement is taken from the water requirements based on the cropping pattern.

The volume of water to be diverted at the tertiary turnout is based on the Unit irrigation requirement plus conveyances losses and includes a distribution factor, that approaches unit for large areas and increases in value for small areas.

Note that the term Water Duty should not be used as it connotates a totally different concept of estimating water delivery rates.

AUTHOR

Erroll Dennyse Coles is a Fellow of the Institute of Agricultural Engineers. A graduate of Salisbury Poly-Technic and London University (external studies) he has specialised on surface irrigation systems in Africa, the Near East, and Asia since 1955.

He has been employed by Louis Berger International, Inc. as a Senior Irrigation Engineer since 1976. Assignments have included projects in Iran, Indonesia, Egypt, and - currently - Thailand.