IAN: 38199
926
PN-AAR-806

TRAINING OF TRAINERS IN MANAGEMENT (TTM)

Final Report
Contract No. AID/SOD/PDC-C-0006

Submitted to:

Mr. Lou Faoro
DS/RAD
Agency for International Development
Washington, DC

Submitted by:

Practical Concepts Incorporated (PCI)
1730 Rhode Island Avenue NW
Washington, DC 20036

PCI Project Director: Leon J. Rosenberg
PCI Project Manager: Jane Hersee

August 31, 1981

ACKNOWLEDGEMENTS

This program owes much to many people too numerous to mention here by name.

Firstly, the participants--who by their determination, dedication and hard work have helped demonstrate the universal applicability of these concepts to the real management problems facing the developing world.

Secondly, the AID/Washington project managers for this program who have been unfailing in their commitment to the objectives and untiring in their efforts to untangle the red tape and help the program proceed as smoothly as possible. The first project manager, Elaine Soulides of DS/IT, originated the idea of taking a training of trainers in management program overseas after seeing the success of a similar program in the U.S. Although that program, largely based on the U.S. Civil Service management and supervision training, was greatly modified by PCI, it served as a springboard for an exciting five years of developing and testing a management science. Both Ms. Soulides and her successor, Mr. Lou Faoro of DS/RAD, supported the new thrust of the TTM towards the private sector. Their strong and creative support helped make the final seminar, for women in agribusiness, a tremendous success.

The idea of management improvement efforts to support development has been a unifying one for all involved in the program; USAID Missions in Tanzania (Arusha as well as in Dar es Salaam), Portugal, Morocco, Zaire and Guinea were especially helpful in setting up the programs; the U.S. Ambassador in Togo was especially interested in the women in agribusiness project.

PCI has a special word of thanks for our colleagues at the American Cooperative Development Institute; heavily involved in the Tanzania Rural Development Bank, this organization whole-heartedly supported the Bank's effort to sponsor the TTMs in Tanzania and, when some of the funding sources reneged on earlier

agreements, came through with additional funds that allowed the Bank to conduct the seminars at least for its own personnel.

And finally, our thanks and heartfelt gratitude to the corps of PCI faculty (21, plus 16 TTM graduates who did the work of 99 trainers) who helped develop expand and improve the curriculum during the past five years. It required a special dedication and commitment to management as a tool for development for these individuals (more practitioners than trainers) to go out again and again on long and frequently arduous training assignments in remote corners of the world; the rewards of seeing learning take place, learning that was thoughtful, analytical and challenging rather than by rote, made it all worthwhile.

CONTENTS

	Page
SECTION A. INTRODUCTION	A-1
SECTION B. OBJECTIVES	B-1
SECTION C. ACHIEVEMENTS	C-1
1. Purpose	C-2
a. Tanzania	C-2
b. Portugal	C-4
c. Morocco	C-4
d. Barbados	C-5
e. Zaire - PVO	C-5
f. Bolivia	C-6
g. Togo (Women in Agribusiness - Guinea, Zaire, Togo)	C-6
2. Summary - Current Contract	C-7
3. Long-Term Impact from Previous TTM & Related Contracts	C-9
a. Bangladesh	C-9
b. Latin America Seminars	C-9
c. Philippines (Thailand Seminar)	C-10
d. Guyana	C-10
e. Egypt	C-11
4. Summary - First TTM Contract & Related Contracts	C-11
5. Combined Program Impact	C-12
6. Causal Linkages Between Purpose & Goal	C-12
7. Goal Level Impact	C-16
8. Outputs	C-20
SECTION D. LESSONS LEARNED	D-1
1. Type of Seminar	D-1
2. Process	D-3
3. Participant Selection	D-6
4. Administrative	D-6
5. Curriculum & Training Methodology	D-7
SECTION E. CONCLUSIONS	E-1
SECTION F. RECOMMENDATIONS	F-1
APPENDICES	

With the completion of work under Contract Number AID/SOD/PDC-C-0006 entitled Training of Trainers in Management (TTM), PCI has ample evidence that demonstrates the TTM program has achieved what it set out to accomplish five years ago, namely:

1. It is possible and practical to establish management as a science rather than an art, based on principles from which practice derives;
2. Those management principles are consistent with and set forth in the TTM curriculum as it has evolved; and
3. It is possible to get these principles across to participants in a six-week seminar, such that they can not only effectively use them, but can train others and build/adapt management systems and processes on their own.

The present contract is considered an extension of the first, despite a nine month delay between the end of the first and the start of the second. In addition, there were three separate contracts for seminars similar to those presented under the TTM. Thus the present report to some extent summarizes achievements under all five contracts--as together they represent PCI's combined efforts to show that there is indeed a management science which is relevant to all geographic regions and all management levels within organizations.

The combined programs have resulted in 824 participants (first generation of TTM graduates) being trained in generic management principles and concepts. Of these, approximately 80 participants (10%) have reported that they have further trained a minimum* of 4,718 "second generation" trainees in some or all of the TTM curriculum (an average of 50 students per trainer).

---

* We stress that these are minimum levels; we expect that TTM graduates as they train and apply the management methodology will gain in experience and confidence leading to increased output annually. This program is a beginning; it planned to launch individuals on a lifetime of critical use of management principles learned in the seminar to build, adapt and modify the tools, techniques and processes in any way appropriate to their environment and consistent with the underlying principles.

The TTM graduates were trained by PCI in 33 seminars in 23 countries; participants attending the seminars have come from 40 different countries. The concepts, tools and techniques presented in these seminars have been uniformly, and enthusiastically, accepted by the participants; the PCI faculty would be hard put to say which countries or regions were able to learn this management technology the easiest--we have generally been impressed with the degree of learning that has taken place in all the seminars, the excitement generated by the participants themselves as they become more competent in practical applications of the technology to their own projects, and the extra hours put in by the participants on their own initiative to achieve maximum learning. This uniform acceptance across so many diverse cultures further reinforces the statement that we are presenting a management science.

PCI has received sufficient impact data (data on the use of the management technology by participants after returning to their jobs) to suggest that the combined TTM program has had a powerful impact and deserves to be systematically and rigorously evaluated to determine the full extent of that impact. The focus of the evaluation should be on doing more and better of that which has succeeded. Even without an evaluation, we recommend going forward as outlined later on this report.

This report focuses attention on the achievements and lessons learned during the past five years (October 1976 through August 1981), and presents some recommendations for possible future management improvement efforts AID might wish to undertake.

The report is organized in sections as outlined in the Table of Contents. We have deliberately kept this document as brief as possible so as not to duplicate earlier reports. These consist of seminar completion reports for each seminar, interim progress reports under both TTM contracts (One: AID/it-c-2471; two: AID/SOD/PDC-C-0006), and the final report for the first TTM contract, dated December 1978. Interested readers can obtain additional information from the DS/RAD Project Manager, Lou Faoro, or from PCI's TTM Project Manager, Jane Hersee.

6

The objectives for the Training of Trainers in Management (TTM) program are consistent with those discussed in DS/RAD's new Strategy Working Paper for Management Development in the 1980s. At the Purpose level of the project, the program tries to improve performance of managers and trainers in their jobs; in the longer term, we hypothesize that this will lead to organizations and individuals that more effectively supply needed products and services to their constituents. As the AID Mandate evolved during the initial course of the TTM program, the priority constituents were defined quite generally as the poor. As the program evolved, priorities were given to constituents in agriculture and rural development. Still later women and the private sector were included as priority constituents.

While it was initially assumed the bulk of participants would be existing, or scheduled to become, trainers, the courses were also open to managers from operational organizations. It was thought that a mix of trainers and management practitioners would increase the awareness of both groups to the problems and needs of the other. In addition, PCI's basic premise was that the best way of increasing organizational effectiveness was not by cooperating exclusively with individual training entities but rather by concentrating on operational agencies and individuals. By improving basic management practice on the part of such individuals and operating organizations we would create a demand for additional management training. This demand could, of course, then be met by the newly trained graduates through mechanisms that would form naturally in response to the demand. Such mechanisms were indeed formed naturally and were in-house training departments, newly formed or expanded (e.g., Bangladesh and Tanzania); individuals, using TTM colleagues as support as needed (Bangkok Metropolis, U.S. consultant using TTM graduates in Peru); or outside consulting firms employing TTM graduates (GMTDC, Guyana).

Impact of this program, therefore, first means utilization of the TTM concepts, tools and techniques (modified as appropriate) either directly to improve management practice or in developing appropriate training programs aimed at both improving management practice and at increasing the pool of improvement oriented, practical management trainers (in the Philippines, for example, we know there are such "second generation" trainers already conducting training in the TTM concepts; a corps of 11 trainers have been trained to expand the PMS* training capability of a Community Development Unit in a Latin American country). Second, that management improvement efforts result in better services to "constituents."

The broader stated objectives and aggregated indicators are shown in the Program Logical Framework (Exhibit 1). The following flow diagram, Figure 1, attempts to display the sequences of causal steps that would lead to achievement of those objectives.

* PMS--Project Management System developed by PCI and taught in the TTM.

EXHIBIT 1:

LOGICAL FRAMEWORK FOR TRAINING OF TRAINERS IN MANAGEMENT (TTM) PROGRAM

	OVI	MOV	Assumptions
OAL: Increased organizational effectiveness in supplying services and products to the poor	1. Key public service agencies report upward trend in services/products delivered. 2. Cost per services/products delivered reduced, discounting for inflation. 3. Independent observers and "clients" confirm indicators 1 and 2 above and report favorably on quality and distribution of services.	1. Review of Annual Plans; brief interviews with key personnel. 2. Review of Annual Budgets. 3. Random Survey of Observers and "clients". 4. Comparison of agencies with/without TTM graduates. [for "attribution" to the project]	1. Increased delivery of services/products will lead to "Development". 2. Governments willing to support evaluation so we can continue learn how to improve programs/projects and and management processes to achieve "development".
JRPOSE: Increased cadre of indigenous managers/trainers applying appropriate management concepts and techniques to development-related activities within their native country.	1. An average of 45 trainees*/year trained per TTM alumni in one or more TTM components in formal sessions of at least 4 hours. 2. TTM alumni make an average of 2 applications/year of one or more TTM components in their job situation. 3. Superiors, colleagues, subordinates and trainees respond positively to actions taken by TTM alumni as per indicators 1. and 2. above (purpose level).	1. Statistically valid random survey of all TTM graduates to date. 2. Statistically valid random survey of all TTM graduates to date. 3. All of above validated by on site interviews by evaluators and PCI staff during follow-up visits. 4. To extent possible, trace actions to effects and relate to MOV 4 Goal level.	1. Graduates will continue to work in public sector on programs related to social/economic development. 2. Momentum will be maintained after first six months subsequent to seminars. 3. Management improvement efforts will be integrated effectively with existing operations and not cause any severe disruptions.
ITPUTS: 1. Participants can (at end of seminar) a. Demonstrate ability to use and teach others to use an integrated set of management tools--processes and procedures that organize people and information in ways consistent with basic management principles:	1. Between 400 and 1000 TTM Graduates by 6/81. * At least 75% of these trainees are managers directly serving the priority populations	1. Tests, questionnaires, review of participants' work products and activity in small groups, practice training, etc.	1. Returning participants are in, or will be placed in positions appropriate for introducing management improvement. 2. Environment will encourage use, adaptation & modification of management technology introduced by TTM including local translations where necessary. 3. TTM graduates able to obtain follow-up assistance when needed according to these criteria: • high impact would result from their effort. • priority area according to local government. • consistent with AID mandates. • high amounts of visibility and subsequent spread effect are likely, above the 70% probability level. • PCI, local govt and participant firmly believe they cannot "go it alone".

• Setting objectives and planning work • Implementation and control • Evaluation and feedback • Working as an effective team	a1. Given a hypothetical or real situation, learner can analyze problem, devise solution and design, schedule and allocate resources in a rational manner. a2. Given a project design, schedule and resources, learner can define potential trouble spots, appropriate monitoring and reporting systems and interim performance measures of key events. a3. Given a project design, schedule and resources, learner can devise a rational evaluation plan. a4. Learner can describe what motivates effective teamwork, and situations in which teamwork is desirable. a5. Learner can articulate principles and tools to accomplish items 1-4 above.		
Demonstrate knowledge and skills in training--including needs assessment, development of curriculum and lesson plans, presentations, logistics, use of visual aids, etc.	b1. In practice presentations, learner scores higher than 75% on average of group and instructor scores. b2. Learner developes realistic, high quality complete plan, and preliminary draft instruments, charts, etc., for at least one major management improvement area he plans to tackle on return home.		
Complete specific materials and plans for applying relevant concepts to training and/or management improvement efforts "back-home".	c. See b2.		

	OVI		Assumptions
d. Describe evolution of management thought and key principle operating throughout; given this perspective, can assess utility of various management techniques, including those they become aware of subsequent to the seminar.	d. Learner can state major management theories, their relationship to one another and their relationship to the PMS & generic management principles.		
2. Participants are part of an information exchange mechanism to exchange management improvement ideas, as well as provide peer group support, on a continuing basis.	2a. All TTM alumni receive TTM newsletter--active participation by alumni with letters to the editor and several article submissions per issue. 2b. Regional chapters in all regions; 60% of countries represented in TTM seminars have located chapters within two years of seminar.		
3. Participants receive appropriate follow-up to facilitate application of plans developed under item 1c. above. 4. Senior Level officials participating in EMS Seminar [see notes]	3a. Visits to 20% of alumni where pay off from follow-up is considered high and most likely to have significant spread effect. 3b. Visits to at least 50% of remaining 80% of alumni. 3c. Alumni and their superiors state follow-up visits were worthwhile and resulted in significant consolidation of gains from TTM. 4. Between 200 and 500 EMS attendees by 6/81.	INPUTS: 1. Contract monthly records 2. Reports (site visit, seminar completion, 6-monthly progress etc.)	1. Effective participant selection criteria will be utilized. 2. Sufficient pre-planning, involving host country officials will occur. 3. Project funds will be augmented by mission funds. 4. Demand is as projected. 5. World economic situation (oil, inflation, etc.) will not significantly reduce purchasing power of present contract funds.

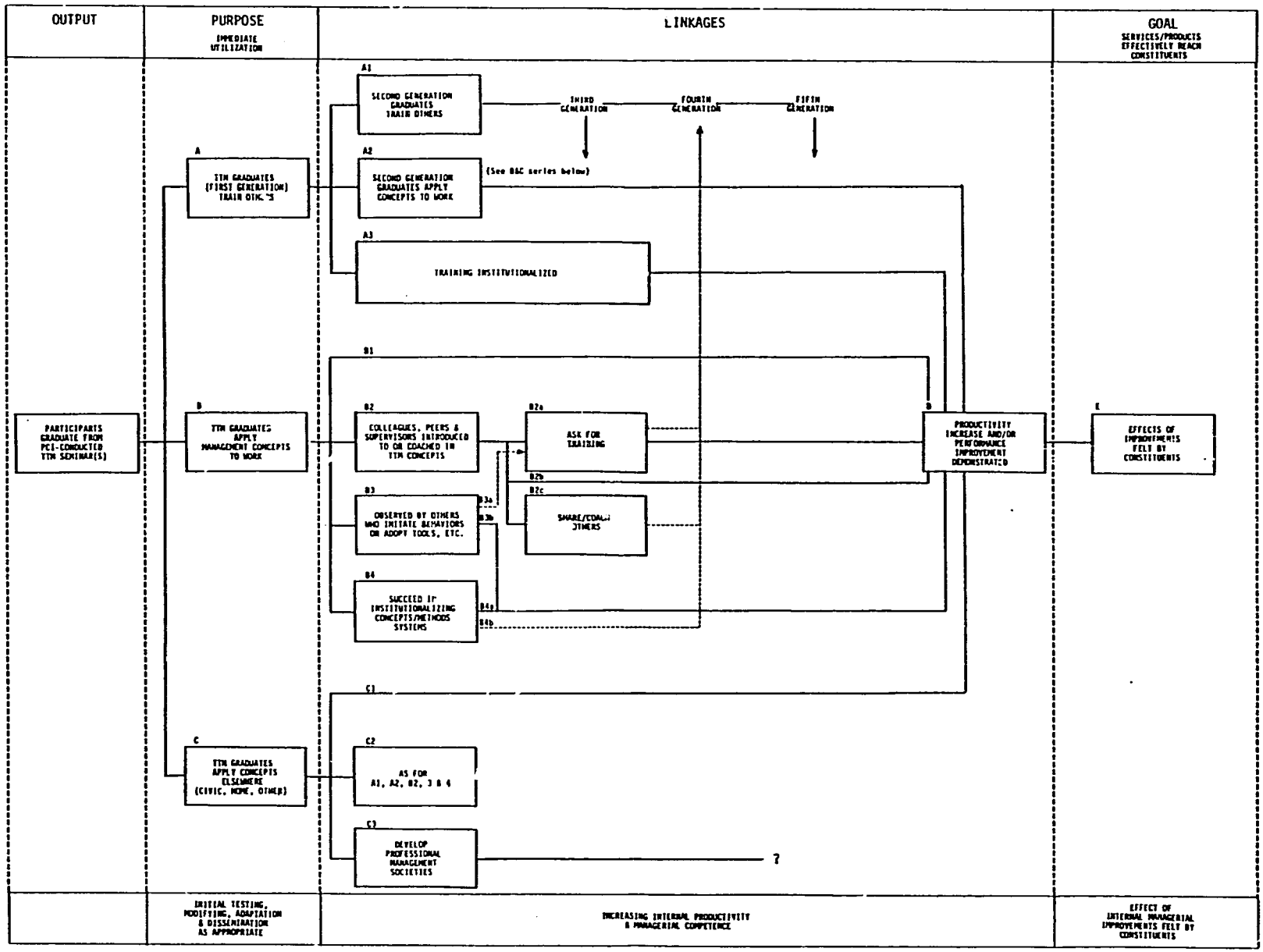
OUTPUT
PURPOSE
IMMEDIATE UTILIZATION
LINKAGES
GOAL
SERVICES/PRODUCTS EFFECTIVELY REACH CONSTITUENTS
PARTICIPANTS GRADUATE FROM PCI-CONDUCTED TTM SEMINAR(S)
A
TTM GRADUATES (FIRST GENERATION) TRAIN OTHERS
B
TTM GRADUATES APPLY MANAGEMENT CONCEPTS TO WORK
C
TTM GRADUATES APPLY CONCEPTS ELSEWHERE (CIVIC, HOME, OTHER)
A1
SECOND GENERATION GRADUATES TRAIN OTHERS
THIRD GENERATION
FOURTH GENERATION
FIFTH GENERATION
A2
SECOND GENERATION GRADUATES APPLY CONCEPTS TO WORK
(See B&C series below)
A3
TRAINING INSTITUTIONALIZED
B1
B2
COLLEAGUES, PEERS & SUPERVISORS INTRODUCED TO OR COACHED IN TTM CONCEPTS
B2a
ASK FOR TRAINING
B2b
B2c
SHARE/COAL... OTHERS
B3
OBSERVED BY OTHERS WHO INITIATE BEHAVIORS OR ADOPT TOOLS, ETC.
B3a
B3b
B4
SUCCEED IN INSTITUTIONALIZING CONCEPTS/METHODS SYSTEMS
B4a
B4b
D
PRODUCTIVITY INCREASE AND/OR PERFORMANCE IMPROVEMENT DEMONSTRATED
E
EFFECTS OF IMPROVEMENTS FELT BY CONSTITUENTS
C1
C2
AS FOR A1, A2, B2, 3 & 4
C3
DEVELOP PROFESSIONAL MANAGEMENT SOCIETIES
?
INITIAL TESTING, MODIFYING, ADAPTATION & DISSEMINATION AS APPROPRIATE
INCREASING INTERNAL PRODUCTIVITY & MANAGERIAL COMPETENCE
EFFECT OF INTERNAL MANAGERIAL IMPROVEMENTS FELT BY CONSTITUENTS

As is now normal for AID programs and projects, indicators and targets have been established for Purpose and Goal level objectives but data collection within the project is oriented for the most part to the Output/Input level. Going beyond the normal Input/Output level monitoring, we did, however, mail questionnaires to participants in an attempt to systematically obtain Purpose and Goal level data. We supplemented such data with occasional letters and visits to and from participants so within the project we have better knowledge of impact than might be expected. We stress that these data in no way substitute for the types of controlled comparisons that should be effected to undertake impact evaluations. However, the data we have compiled to date suggest that this program has had high impact on its intended audiences. We strongly recommend therefore that a rigorous evaluation be undertaken to see if our tentative conclusions regarding the success of the program are substantiated and if so to allow replication of those elements of the program leading to the greatest success.

As the flow chart in Figure 1 shows, the immediate hoped for effect (Purpose) of the seminars is to have TTM graduates actively using what they have learned. There are three basic categories of use:

1. Training others;
2. Applying the concepts to one's job; and
3. Applying the concepts to other, non-job related activities such as civic, family farm or other business, career development, etc.

We will summarize below the evidence we have to date demonstrating that TTM graduates have actively used what they have learned during the seminars in all three of these categories.

1. PURPOSE

PURPOSE: Increased cadre of indigenous managers/trainers applying appropriate management concepts and techniques to development-related activities within their native country.	1. An average of 45 trainees*/ year trained per TTM alumni in one or more TTM components in formal sessions of at least 4 hours. 2. TTM alumni make an average of 2 applications/year of one or more TTM components in their job situation. 3. Superiors, colleagues, subordinates and trainees respond positively to actions taken by TTM alumni as per indicators 1. and 2. above (purpose level).

For Purpose level achievement we look for examples of graduates from the TTM seminars applying the concepts and skills acquired during the seminar to their work and in training others. We have many such examples, but little evidence that relates to their quality.

A summary of known achievements to date,* at the Purpose level, is presented below. Each item of evidence cited is marked "A," "B" or "C" (reference Figure 1) to show in which category of use it fits. We present data for the current contract first, followed by data from the older contracts.

a. Tanzania

A series of seminars were conducted by PCI for 51 employees at the Tanzania Rural Development Bank (TRDB), including the Chairman and several Directors. An additional nine individuals from banking and agricultural organizations that work with TRDB attended the Executive Management Seminar.

From responses to the evaluation questions mailed to participants and from letters, we have learned:

---

* Excluding data derived in a haphazard "evaluation" conducted in 1979; it is not known whether or not any of the evidence in that study duplicates PCI evidence.

• Six seminars have been conducted by TRDB TTM graduates by 167 people including agricultural project officers, accountants, credit supervisors and village chairmen. This suggests the Bank has institutionalized its ability to provide these seminars;	*TTM graduates (1st generation) train others* (A in Figure 1)
• A regional manager has used brainstorming techniques in staff meetings;	*TTM grads apply mgt. concepts to work* (B)
• A deputy project manager uses LogFrame to better appraise, monitor and evaluate projects;	*TTM graduates apply management concepts to work* (B)
• Several participants have used LogFrame to "better understand and follow-up project implementation" and "have better knowledge of sources of information";	*TTM graduates apply management concepts to work* (B)
• Since application of LogFrame, a regional manager reports that "performance data on each client's accounts...is readily available to demand";	*Productivity increase and/or performance improvement demonstrated* (D)
• The same regional manager reports that data communication between the Regional Office and the Head Office is now available on time and in the form required;	*Productivity increase and/or performance improvement demonstrated* (D)
• Graduates applying the concepts were able to collect over 2,000,000 Tanzanian shillings ($250,000) in loan repayments;	*TTM graduates apply management concepts to work; productivity increase and/or performance improvement demonstrated; effects of improvements felt by constituents* (A, D, E)
• Seven of the eight respondents (87%) said they would recommend this program to their colleagues; and	
• USAID/Dar es Salaam specifically requested a further TTM for managers in institutions working with the Bank.	

b. Portugal

In two TTM seminars in Portugal (June/July 1980 and March 1981), a total of 60 participants from the public and private sectors were trained in the TTM concepts, methods and techniques. Evidence of applications subsequent to those seminars include:

- One graduate had conducted a seminar for 12 participants; *TTM graduates (1st generation) train others*
- After both seminars, TTM graduates assisted the Ministry of Agriculture develop program/project plans using TTM management concepts and tools; *TTM graduates apply concepts elsewhere (civic, home, other)*
- Four of five respondents to the questionnaire had applied some or all of the concepts. Specifically cited were: Logical Framework, Performance Networks and Matrix Management; and *TTM graduates apply management concepts to work*
- Two TTM graduates participated as co-trainers with PCI staff in the second TTM seminar in March 1981. *TTM graduates (1st generation) train others*

c. Morocco

Twenty-three participants completed the TTM conducted for the Ecole Nationale d'Administration Publique (ENAP). Most of these were students studying for Master's degrees; most had several years' work experience and would be returning to their ministries after one more year of study.

Respondents to the evaluation questionnaire indicate:

- 120 administrators received training in TTM concepts and methodologies by two of the participants. *TTM graduates (1st generation) train others*

d. Barbados

A seminar/workshop was conducted and attended (although not full-time) by 23 participants. In effect, the purpose was achieved during the workshop in which the concepts and tools were applied in developing the regional Food and Nutrition Sector Strategy entitled CARICOM* Feeds Itself. *(TTM graduates apply management concepts to work)*

The strategy was later (December 1980) reviewed by approximately 70 people. 80% of these reviewers rated the strategy as very good. It passed the review with only a few modifications and was scheduled to be presented to the region's Council of Ministers in early 1981. (We understand copies of the review have been circulated within AID.)

- Two former graduates from the Guyana TTM (under separate contract) served as co-trainers in this seminar. They performed excellently--both as trainers and in their ability to get trainees to apply in a novel situation concepts and skills which they themselves had only recently (1979) learned.

TTM graduates (1st generation) train others

e. Zaire - PVO

Three seminars were conducted in Zaire for 88 participants representing 20 private voluntary organizations (four international and 16 indigenous).

A major measure of Purpose level success will be qualitative improvements in project designs and funding applications submitted by the PVOs to USAID/Kinshasa.

---

* CARICOM: Regional organization representing the Caribbean Community. Member states include Jamaica, Trinidad and Tobago, Guyana, Barbados, Grenada, Antigua, Belize, St. Vincent, St. Lucia, Dominica, St. Kitts/Nevis and Montserrat.

At last contact with the USAID (July 1981), the new applications were expected shortly. No evaluation questionnaires have been mailed (if the contract time allowed, they would have been due for mailing August 1981).

DS/RAD should request feedback from USAID on the number and quality of projects being submitted by the PVOs who participated in this training.

f. Bolivia

An Executive Management Seminar for 27 attendees and a TTM for 30 were conducted in Bolivia in January/February 1981.

Apart from what is mentioned below under Goal, we have no more evidence to date on Purpose level achievement in Bolivia.

g. Togo (Women in Agribusiness - Guinea, Zaire, Togo)

A total of 33 women, ten from Guinea, 12 from Togo and 11 from Zaire, graduated from the TTM seminar conducted in Lome, Togo. Each delegation developed complete designs, implementation, management and contingency plans for developing agribusiness ventures:

Guinea:	Onion growing business Tomato growing business
Togo:	Fruits and vegetables for export
Zaire:	Pig farm Bakery Chicken farm

If the women immediately register their organizations and obtain necessary loan funds and can confidently state they are in business, the Purpose will be achieved--though only fully if they also successfully stay in business for at least three years.

The public sector attendees have also drawn up plans to further involve other women in business opportunities in each of the three countries. Success in implementing these plans will also reflect Purpose level success for the TTM program.

2. SUMMARY

Without a rigorous evaluation there is no way we can, with any confidence in reliability and accuracy, extrapolate the data given above to the whole universe of TTM participants.

However, we are pleased to note the minimum quantitative levels of achievement reported by only 18 of the 125 participants from the first six seminars (14.5%):

• 299 "second generation" individuals trained in some or all TTM concepts, techniques and tools;	*TTM graduates (1st generation) train others*
• Twelve non-training applications directly to the participants' own jobs; and	*TTM graduates apply management concepts to work*
• Nine former TTM graduates participated as co-trainers in PCI-conducted TTMs. (see Exhibit 2 for a list of these co-trainers)	*TTM graduates (1st generation) train others*

We recommend an evaluation be conducted within the next eight months (allowing sufficient time for the most recent Togo seminar participants to achieve demonstrable purpose level results.

Exhibit 2:

TTM GRADUATES WHO SERVED AS CO-TRAINERS WITH PCI FACULTY FOR TTM SEMINARS

CONTRACT ONE:

• Malawi (1978)	Samuel Lesole TTM graduate from Lesotho Seminar (1977)
• Bangladesh (Seminar 8A - 1978)	Abdul Jalil Sukumar Charkrovarty Two TTM graduates from Bangladesh Seminar 7 (1978)
• Bangladesh (Seminar 8B - 1978)	Sukumar Charkrovarty Abdul Jalil A. Shirajul Islam S.M. Elias Fazrul Huda S. Shawkat Ali TTM graduates from Seminar 8A (1978)
• Colombia (1977)	Alfredo Duran TTM graduate from Costa Rica (1977)

CONTRACT TWO:

• Portugal II (1981)	Pedro Manual de Oliveria Ribeiro Simoes Rui Alberto Ferreira Dos Santos Alves Maria Isabel Mota de Castro TTM graduates from Portugal I (1980)
• Barbados (1980)	Neil B. Fraser Clement D.M. Duncan TTM graduates from Guyana TTM (under separate contract, 1979)
• Bolivia (1981)	Vicente Sarubbi Graduate from Costa Rica TTM (1977)
• Togo (1981)	Ray Ntungamulongo Tshibanda Gattarya Lukalansone TTM graduates from Ivory Coast Seminar (1978)

3. LONG-TERM IMPACT FROM PREVIOUS TTM & RELATED CONTRACTS

a. Bangladesh (see Appendix A)

- Over 2,300 "second generation" trainees have received TTM-type training conducted by TTM graduates (see Progress Report of December 1980); *TTM graduates (1st generation) train others*
- The Sonali Bank Staff College has successfully institutionalized its own capability to provide this training, not only for its own staff, but for staff of other Bangladeshi institutions; *TTM graduates (1st generation) train others*
- The Integrated Rural Development Program (IRDP) has decided to develop its own institutional capability to provide such training for its own staff; *TTM graduates (1st generation) train others*
- TTM is credited with the introduction of progressive and development-oriented management systems in two new departments of the Bank: The Rural Credit Department (RCD) and Small Industries Development (SID); and *TTM graduates apply management concepts to work*
- A major reorganization of the Bank is being planned using TTM methods. *TTM graduates apply management concepts to work*

b. Latin American Seminars

We continue to hear from TTM graduates from seminars conducted in Costa Rica and Colombia in 1977.

Illustrative of such correspondence are the attached letters (Appendix B) from two particularly active graduates from the Colombian TTM seminar in 1977. These describe the seminars they have organized and in which they presented the Logical Framework and Project Management System learned in the TTM. A further letter from an organization that requested these seminars (five in all) is also included. *(TTM graduates [first generation] train others)*

A graduate from the TTM seminar in Costa Rica recently participated as a senior trainer in the TTM seminar conducted by PCI in Bolivia. In June of 1980, two graduates conducted training for AID in Asuncion. *(TTM graduates [first generation] train others)*

c. Philippines (Thailand Seminar, 1977)

A visit to the PCI offices of a Filipino graduate from the 1977 regional seminar in Thailand confirmed that the City Development Program of the Philippines requires that key TTM concepts be taught to city management staff. It also requires that all city development projects being submitted for funding are in Logical Framework format and include implementation and evaluation plans. The TTM graduate was accompanied by a city development staff member whom he had trained. This second generation trainee was clearly comfortable with the concepts and tools which he discussed with considerable competence. *(TTM graduates [first generation] train others; TTM graduates apply management concepts to work)*

d. Guyana

Two graduates from the Guyana seminar participated as co-trainers in the EMS conducted in Barbados in August 1980. PCI contracted with the Guyana Management Development and Training Center (GMDTC) for these services; we understand GMDTC has provided similar services to many Guyanese organizations and has an impressive number of "second generation" trainees to their credit. *(TTM graduates [first generation] train others)*

- Staff from GMDTC are continuing to provide advice to CARICOM staff charged with finalizing the strategy. *TTM graduates apply management concepts to work*

e. Egypt

Three TTM graduates (police officers) have institutionalized a fairly complete version of the human relations component of the TTM seminar (about 1/5 of the course content). They are teaching this to all police officer trainees in Egypt. Please see a fairly comprehensive informal assessment conducted by a TTM faculty member (on other work in Egypt) in Appendix C. *(Graduates train others)*

We also note one of these three individuals has used the Logical Framework to develop a project plan. *(TTM graduates apply concepts to work)*

4. SUMMARY--FIRST TTM CONTRACT & RELATED CONTRACTS

Combining data from the first TTM final report with data received since completion of that contract, we have the following minimum level achievements:

• A minimum of 4,419* "second generation" trainees have received training in some or all of the TTM principles, concepts and methodologies;	*TTM graduates (1st generation) train others*
• 19 specific, non-training applications directly to the participants' own jobs; and	*TTM graduates apply management concepts to work*
• Eight former TTM graduates participated as co-trainers in PCI-conducted TTMs.	*TTM graduates (1st generation) train others*

* 1,794 trained by 34 graduates from first six seminars, Contract One; 2,300+ trained in Bangladesh; 125 by TTM graduates from Costa Rica (conservative estimate for those attending documented seminars); 100 by GMDTC (again conservative estimate); 100 from Philippines (extremely conservative estimate). Does not include an estimate of second generation trainees from Egypt.

5. COMBINED PROGRAM IMPACT

If we now add up all the data from all the programs, we have the following totals:

- Minimum of 4,718 "second generation" trainees (excluding those taught by TTM graduates in PCI-conducted seminars;
- 21 non-training applications; and
- 17 TTM graduates participating as co-trainers in PCI-conducted TTMs.

6. CAUSAL LINKAGES BETWEEN PURPOSE & GOAL

As Figure 1 shows, there are many linkages between Purpose and Goal achievement; some of these are fairly obvious and are identified in the diagram as A1, A2, A3, B2, B3, B4, C2 and C3. Leading from these we have A1a, B2a, etc. In some instances we could have direct linkages from Purpose to the level that is "almost" Goal but is closer to an effectiveness measure of purpose: Productivity increase or performance improvement internal to the organization (item D in Figure 1).

This section will present some data we have relating to these various linkages. Recognize that there may be some duplication because these linkages are subsets of the major categories A, B and C.

A1. Second Generation Trainees Train Others

- A second generation trainee from the City Development Program in the Philippines visited PCI's offices (with the TTM graduate who trained him). We did not, unfortunately, ask him how many others he had trained; and
- A TTM graduate (Colombia) recently wrote that he is training 11 trainers of the Community Development Unit of the Ministry of Labor and Social Security's National Training Service (SENA), in the TTM Project Management System (PMS).

A2. Second Generation Trainees Apply Concepts to Jobs

Apart from the Filipino mentioned above, we have no data.

A3. Training Institutionalized

- Sonali Bank, Bangladesh (cooperating institution);
- Bangkok Metropolis (sent participant);
- City Development Program, Philippines (sent participants); and
- CERFER (Togo) planned to incorporate the Project Management System into its formal curriculum in 1978 (Ivory Coast participant).

B1. TTM Graduates Effectively Apply Concepts to Work (Direct Linkage B to D in Figure 1)

- Graduates from the Tanzania seminar were able to recover 2 million Tanzanian shillings ($250,000 approximately) in loan repayments. This is also an example of D: Improved productivity and performance. It could be an example of E also, but would need to be validated;
- "Performance data on each client's accounts...is readily available on demand." Tanzania; and
- Improved communication between head office and regional office. Tanzania.

B2. Colleagues, Supervisors and Subordinates Introduced To or Coached in TTM Concepts

- "Due to ground swell of enthusiasm resulting from pilot program... wish to..." have more seminars for "71 chiefs of staff, 213 planning staff officials, and 1,136 Changwat officials." Thailand. (Did not occur due to political infighting between Ministry of Interior and DTEC);
- TTM evaluation techniques presented at a UNICEF-sponsored conference in 9/77;

- "I...made a presentation of the Logical Framework System to executives of the factory...It had a very favorable reception and it was agreed to request the Board...to adopt it for all projects (Costa Rica graduate);

- "Therefore I had to present the methodology with its entire theory" (Costa Rica graduate);

- "Overwhelming request for 100 candidates from Government of Malawi indicates success (of) your 1978 workshop." (Not followed up by USAID; possibly due to change in staff);

- TTM participant from Malawi seminar convinced his organization to sponsor its own TTM seminars--resulting in saturation level training for that organization (TRDB, Tanzania); and

- "Three of my fellow business advisors have become familiar with the information your send us--IAMI Newsletter--and wish to receive it."

B3. Observed by Others--Who Then Imitate Behaviors or Adopt Tools/Techniques

- Mr. Mohele, at TRDB, Tanzania, drew up a large bar chart of his proposed management improvement activities for the Bank. it was much admired by colleagues and visitors to his office; he indicated several then developed their own charts; and

- He also told PCI that his boss one day was called upon to give a management speech; when he couldn't find Mr. Mohele, he borrowed his TTM training materials--was very pleased and later endorsed the idea of such training for the Bank.

B4. Succeed in Institutionalizing Concepts, Methods and Systems

- A senior trainer from the Philippines reports: "The LogFrame is made a requirement for projects before a city will be entitled to assistance under the City Development Program";

- Management tools learned at TTM/CR have been adopted by the Dominican Development Foundation for the management of several of their projects;

- A rural agricultural project in the Dominican Republic has changed its operational management system to that system presented in the TTM (PMS) and is currently operating under this new system;

- "In this manner, approximately 95% of the concepts taught at the seminar are being used (and being adapted to the internal systems of INFOM) and will continue to be used during the four years of this program;

- "...we are developing an adaptation, standardization, and implementation of the (TTM) methodology for the needs of the organization. This means the development of projects in 18 areas that cover the operation nationwide. To achieve this, we have institutionalized the adapted methodology on a regional scale"; and

- Sonali Bank of Bangladesh: Several sources suggest the Bank has succeeded in institutionalizing its adaptations of the PMS and other TTM concepts within the Bank.

C1. <u>TTM Graduates Effectively Apply Concepts to Non-Job Related Activities (Direct Linkage C to D)</u>

- A TTM graduate reported that another graduate had used TTM concepts to design a farm project; he had obtained funding from AID and was now running his farm (Thailand seminar); and

- A TTM graduate reported his application of the concepts to developing his own business; he had successfully opened for business. (This same graduate reported to a TTM faculty member during the seminar that the concepts had helped him clarify important career issues at a critical time in his life).

C2. <u>Other Applications (Non-Job Related)</u>

- A graduate is using PMS tools to organize the development of his father's non-cultivated land, in collaboration with his 11 brothers and sisters.

C3. <u>Develop Professional Management Groups</u>

- A TTM graduate from Honduras reports that an association of TTM graduates has recommended to the Government of Honduras the establishment of a Project Coordination Office to coordinate development projects in Honduras using the PMS;

- "Twenty-four participants from five African countries decided during the Course to create an informal, professional society: "Amicale des Formateurs en Management,' an inter-African organization with present headquarters in Zaire. This 'Amicale' has a duly elected committee which also identified the heads of the respective national chapters." (Tchad cable);
- Guyana participants formed a management association with formal structure and regular meetings. Minutes of the first few meetings were sent to PCI; and
- The Egypt seminar participants also formed a management association.

7. GOAL LEVEL IMPACT

	Indicators
Increased organizational effectiveness in supplying services and products to the poor	1. Key public service agencies report upward trend in services/products delivered (quantity/qual. 2. Cost per services/products delivered reduced, discounting for inflation. 3. Independent observers and 'clients' confirm indicators 1 and 2 above and report favorably on quality and distribution of services.

The original Goal of the TTM, while seeming to focus on public sector organization, was not meant to exclude the private sector. It was envisioned that at least some of the work would be focused on quasi-governmental organizations such as development corporations. Direct support to the private sector, however, was not envisioned.

As the program evolved, however, it became apparent that there was growing interest in involving the private sector increasingly in development. It also became clear that the TTM curriculum was as relevant to the private sector as to the public. While earlier seminars included participants mostly from the public sector, there was a gradual evolution from public to quasi-governmental (rural development banks in Bangladesh and Tanzania; development corporations in Guyana and Bolivia) to private sector (individuals from the private sector in Portugal to women entrepreneurs in West Africa).

The participants that have graduated from the program seminars represent approximately 350 organizations. While many are still working at the same organization, some have moved on to new jobs in new organizations. Still others have become consultants and trainers, working for several different clients over the years. We do not know, therefore, just how many organizations are recipients of TTM graduates, have been influenced by these graduates, and still less do we know how many have improved their performance because of this influence.

While this is particularly true of the earlier seminars, later seminars tended to be more single institution, sector or task focused. This approach began for the Bangladesh seminar series and followed for most of the current contract seminars. Agencies explicitly assisted under the current contract include:

- Tanzania Rural Development Bank (TRDB);
- Development Corporations and Ministry of Plan, Bolivia;
- NORMA, Portugal--quasi public/private management firm;
- CARICOM--regional development organization for the Caribbean; and
- Ministry of Agriculture, Portugal (not the recipient of a TTM but used the services of PCI staff and TTM graduates in practical applications).

Both the Sonali Bank (Bangladesh seminar series) and TRDB received training at a saturation level that ought to have had a considerable impact and makes these banks high priority for an evaluation effort. This is especially true because sufficient time has passed (Sonali Bank--end of 1978; TRDB--Sprin 1980) that Goal level impact, if any, should be apparent (see Appendix A, report of high impact achieved in Bangladesh by Fall 1979, only one year later).

Informal feedback from the TRDB suggests that there has indeed been impact at the Goal level: The Bank Chairman, Mr. Philip Magani, informally told us his objectives had been met by the seminars and that he could now retire! In addition, one participant reported:

"After clearly defining the duties and responsibilities of each staff, and defining the incentives that goes with performance for good results, we managed to collect over 2,000,000 Tanzanian shillings ($250,000, approximately) in loan repayments. This we have never achieved (before)."

While the latter comment is relevant to more cost-effective performance on the part of the institution, it is only one example and an inadequate representation of any real and long-lasting improvements. There have been several studies of the Bank's performance prior to January 1980, so that any future evaluations should at least have access to baseline data. An early evaluation is strongly recommended.

The Ministry of Plan in Bolivia was so impressed with the TTM seminar and the potential for improving management performance inherent in the Project Management System (PMS) presented in the seminar that it contracted for a needs assessment and tailored seminar for itself. However, this had to be cancelled two weeks after it began. To date we have no information on management improvement efforts resulting from the seminar within the Development Corporations themselves.

NORMA's major objective appeared to be to expand its own ability to give management seminars, not to improve its own organizational effectiveness. The major focus of the Portugal seminars was therefore similar to earlier TTM regional seminars--improving the effectiveness of those attending, with less expectation that any one individual could significantly impact his or her organization. However, the level and quality of the participants was such that more rather than less impact should occur in the long run. In addition, once it was realized that NORMA's objectives for being associated with an American-sponsored program were more political than otherwise, every effort was made to encourage NORMA and the participants to consider each participant as a potential faculty member. In this way at least, the apparent objective could be met.

CARICOM is a Caribbean regional organization that initiated a seminar (based on what it had learned from the Guyana TTM graduates about the TTM) for a specific objective--developing an integrated and highly coordinated food and nutrition

strategy for its member states. It is too soon to know whether or not the strategy that was developed (see Purpose above) will be effectively implemented. It may be possible to assess now whether or not the knowledge and skills acquired during the seminar/workshop have been effectively applied elsewhere.

The Ministry of Agriculture in Portugal, while not participating in the TTM, and at the suggestion of the USAID, "borrowed" PCI staff and TTM graduates to help it use TTM concepts/tools to clarify some of its project designs. This could lead to unplanned "spread" effect and other improvements. It will be interesting to compare the Ministry's approach: "We have a problem to solve, give us some tools," to a more general approach used in the Portugal TTM: Here are some management tools--where can you apply them? We would hypothesize that the former approach (also used by CARICOM) is demonstrably more effective than the latter. The role of intense USAID interest and support for this activity should be carefully examined as a potentially important variable in achieving high levels of impact.

Finally, although the Goal states "public" agencies, the TTM, as discussed above, was never intended to be constrained from addressing private sector needs. The latest seminar and related activities in the TTM series have focused on introducing women to agribusiness in the private sector.* To the extent the women succeed in forming viable businesses, then the program will indeed have had significant impact in the private sector, and potentially in the public sector agencies supporting these efforts. Each country sent public sector officials to the seminars expressly charged with defining plans for the public sector to provide more help in stimulating private sector development.

---

* In West Africa: Guinea, Togo and Zaire have participated. The TTM seminar was conducted in Lome, Togo.

a. Assumptions Affecting Purpose to Goal Linkage

For this contract, we have, as yet, no evidence relating to any assumptions and their effect (or non-effect) on achievement of Goal.

It is important, however, that any future evaluation carefully examine the issue of constraints to achieving the Goal given Purpose level achievement. We suspect the major constraints have more to do with the project design itself: That is (a) reaching a "critical mass" of senior and middle-level managers in any one institution, and (b) dealing directly with the incentive systems and how they encourage or discourage management improvement efforts.

8. OUTPUTS

The Outputs for all the seminars appear to have been satisfactorily achieved to date.

Under the current contract a total of 344 individuals were trained in 13 seminars for an average of 3.6 weeks. This represents a total of 51,200 student training hours. The Togo seminar, strictly for women, brings the total of women actively participating in the program to 62 (18%). Prior to the Togo seminar, the number of women trained was 29 (or 9%). Table 1 provides a detailed listing of individual seminars, dates held, and numbers of participants. Table 2 lists earlier seminars.

Participants have come from a wide variety of organizations in the public and private sectors, including (for current contract only);

Banking and rural credit
Agricultural production and marketing organizations
Fisheries
Agricultural export
Universities and graduate facilities in business, economics and management
Business organizations
Management consulting
Regional development comissions and corporations (industrial)
Petrochemicals and refining

Table 1:
TTM CONTRACT SEMINARS & PARTICIPANT ATTRIBUTES
(June 1979 through May 1981)

COUNTRY & TYPE OF SEMINAR	TOTAL GRADUATES	PARTICIPANTS							
		Male		Female		Known to be Trainers		Duration	Student Weeks
		Number	%	Number	%	Number	%		
Tanzania									
TTM I (2/25-4/11/80)	23	23	100	0	0	11	47	6 weeks	138
EMS (4/14-4/19/80)	11	11	100	0	0	3	27	1 week	11
TTM II (4/21-5/30/80)	26	25	96	1	4	14	54	6 weeks	156
Portugal									
TTM (6/16-7/11/80)	29	25	89	3	11	11	38	4 weeks	116
Morocco									
TTM (7/2-7/31/80)	23	18	78	5	22	2	8	5 weeks	115
Barbados									
EMS & Strategy Workshop (8/6-8/29/80)	23	16	70	7	30	*	*	3 weeks	69
Zaire - PVO (EMS)									
Kinshasa (1/21-2/3/81)	28	27	96	1	4	21	75	2 weeks	56
Lubumbashi (2/9-2/20/81)	30	28	93	2	7	20	71	2 weeks	60
Bukavu (2/25-3/10/81)	30	28	93	2	7	25	83	2 weeks	60
Bolivia									
EMS (1/19-1/23/81)	27	26	96	1	4	0	0	1 week	27
TTM (1/26-2/26/81)	30	28	93	2	7	12	40	5 weeks	150
Portugal II									
TTM (3/2-3/27/81)	31	26	84	5	16	8	26	4 weeks	124
Togo									
TTM (6/9-7/17/81)	33	0	0	33	100			6 weeks	198
TOTALS	344	282	82	62	18	127	41	41 weeks	1,280
								Student Training Hours	51,200
								Per Student Hour	$31.25

* Not Available

Last six-monthly Progress Report, December 12, 1981.

Table 2:
ADDITIONAL TTM SEMINARS

	REGION	NUMBER OF COUNTRIES REPRESENTED	NUMBER OF PARTICIPANTS	DURATION (Weeks)	DATES
	TTMS PRESENTED UNDER CONTRACT ONE				
AFRICA	A. Francophone (in french) Yamoussoukro Ivory Coast	5	24	6	07/06/77 08/17/77
	B. Southern Africa Maseru Lesotho	1	40	6	10/24/77 12/02/77
	C. Southern Africa Lilongwe Malawi	5	29	6	02/27/78 04/06/78
ASIA	A. Pattaya Thailand	4	42	9	02/28/77 04/29/77
	B. Dacca, Bangladesh				
	1. EMS	1	20	2	07/12/78 07/20/78
	2. TTM	2	35	6	07/24/78 08/31/78
	3. TTM	1	8 senior 25 midlevel	5	09/18/78 10/20/78
	4. TTM (Training by Bangladeshis)	1	25	4	11/14/78 12/06/78
LATIN AMERICA	A. Central America San Jose Costa Rica	10	71	9	06/06/77 08/08/77
	B. Medellin Colombia	5	51	6	11/07/77 12/16/77
	ADDITIONAL TTM-TYPE UNDER SEPARATE CONTRACT				
	Guyana (AID/SOD-it-C-0002)				
	1. EMS	1	25	2 days	11/06/78 12/08/78
	2. TTM	2	30	6	11/06/78 12/15/78
	Egypt	1	37	5 weeks + 3 week practicum	05/20/78 07/12/78
	Ethiopia	1	29	5	07/31/78 09/01/78

TTM PARTICIPANTS' COUNTRIES

AFRICA:	Botswana Egypt Ethiopia Guinea Lesotho Malawi Mali Mauritania	Morocco Senegal Swaziland Tanzania Tchad Togo Zaire
ASIA:	Afghanistan Bangladesh (EMS) Bangladesh (TTM) Bangladesh (TTM/Senior Level)	Bangladesh (TTM) Korea Philippines Thailand
LATIN AMERICA:	Bolivia Colombia Costa Rica Dominican Republic El Salvador	Guatemala Honduras Nicaragua Paraguay Peru
CARIBBEAN:	Representatives from the 12 CARICOM member states	
EUROPE:	Portugal	

Transportation
Communications
Metal industries
Financial management service for the army
Tourism
Planning ministries
Schools of public administration (students)
Regional planning
Food and nutrition
Health
Planned parenthood
Agricultural research and development
Agricultural training

Private Voluntary Organizations:

Boy Scouts
CARE
CRS
Salvation Army
Local churches
Centers for the handicapped

Participants came from all levels of management and occupied a wide range of positions:

Managing Directors
Directors
Regional Managers
Project Officers
Officers in Accounting and Administration
Senior Managers
Middle-Level Managers
Management Consultants
Master's Degree Students
Section Chiefs and Department Heads
Senior Advisors
Information Officers
Education Officers
Economists
Production Managers
Communications Specialists
Nutritionists
Health Officers
Community Outreach and Extension
Trainers

There was considerable variation in the objectives of each seminar as well as in their length. For all the seminars except Morocco, the trainers and trainees considered the immediate objectives--transfer of knowledge and skills--to have been fully achieved. Less than full achievement in Morocco was due to a variety of reasons, not the least of which was conducting the seminar during Ramadan. Each of these seminars is described in detail in the individual seminar completion reports.

As part of the follow-up activities for the contract, participants receive copies of the TTM Newsletter. This contains news of TTM graduates and TTM programs, management information in general and technical supplements specific to subjects presented in the TTM. TTM graduates have been encouraged to use the Newsletter to share their experience but the response has been disappointing.

During the current contract there have been two issues of the Newsletter in English, Spanish and French. Copies are included in the previous Progress Reports (December 1980 and July 1981).

Other possible follow-up activities, such as refresher seminars, reunions or consulting, have not been funded under the contract, apart from one brief reunion with participants in Bangladesh (80 attended the reunion, a very high turnout).

Quantity and quality of Outputs have tended to vary by individual seminar, and are discussed in the individual seminar reports.

a. Cost Efficiency

While there are no programs comparable to the TTM in its variety and scope, we were interested to determine the cost per training hour and compare this figure with other programs.

The current TTM contract provided 51,200 student training hours assuming five-day weeks and eight-hour training days--which were frequently exceeded.

The total approximate program cost of $1,600,000 divided to total student training hours gives us a cost per student training hour of $31.25.

Individual seminar cost per training hour varies considerably. Togo has the highest cost per student training hour because the seminar was not only preceeded by prefeasibility and feasibility studies, but it was the only seminar where participant board and lodging was provided by the program. For the most part these figures do not include participant travel, board and lodging, but do include full costs of faculty salaries, travel and per diem;* training materials and shipping costs, translations and all other administrative costs associated with managing the overall TTM program.

For comparison, note that (a) the average American Management Association (AMA) program for 1981 charges $610 for three days (seven hour days), or $29.76 per training hour and (b) the Wharton School, University of Pennsylvania, charges $780 for a two-day seminar (seven hour days), or $55.71 per training hour. These are off-the-shelf programs in English only with no tailoring for specific audiences and do not include travel and per diem costs. They are frequently run by one trainer and include little or no individual coaching and hands-on practice on one's own work with instructor feedback.

It is also interesting to calculate the cost to AID per total numbers of people trained in TTM concepts, using both TTM participants and the second generation trainees they have taught. For approximately $3,080,000 over a five-year period, the program has produced 824 first generation trainees plus 4,718 (a minimum) second generation trainees at a cost of $555 per trainee.

---

* Excluding faculty per diem in Zaire.

All other activities have been summarized in the seminar completion and progress reports as required under this and the previous contract.

Lessons learned must necessarily be subjective for the most part. We have divided the Lessons Learned into five categories: All of them focus on the overriding issue of maximizing impact.

1. Type of Seminar (i.e., single or multi-audience; single or multiple objectives;
2. Process (i.e., EMS/TTM, etc.);
3. Participant Selection;
4. Administrative (scheduling, cost-sharing); and
5. Curriculum and Training Methodology.

1. TYPE OF SEMINAR

a. Objectives

There seems to be general agreement on the part of PCI's faculty that a specific task-oriented seminar seems to be the most effective. It is no surprise that a specific task-oriented seminar provides the most visible, immediate effects in terms of organizational or individual products or changes. It is not clear that this is the best or most appropriate use of the TTM program.

1.	Tanzania (TTM/EMS/TTM)	Improve TRDB's performance--sub-groups focused on specific sub-objectives aimed at achieving the overall institutional objective.
2.	Barbados (EMS/Workshop)	Develop Food and Nutrition Sector Strategy.

3.	Togo (TTM following feasibility studies)	Develop detailed plans of "bankable" businesses.
4.	Zaire/PVO (Two week TTMs)	Develop competence in project design to increase probability of obtaining funding.
5.	Bolivia (EMS/TTM)	Improve overall management competence within nine Development Corporations and the Ministry of Plan.
6.	Morocco (TTM - five weeks)	Improve management skills by exposure to American management methods versus French and expanding the curriculum of ENAP.
7.	Portugal I and II (2 TTMs - four weeks, 1980 and 1981)	Improve Portuguese management skills and assist a Portuguese management firm (NORMA) develop its capability to provide management seminars. Emphasis on private sector.
8.	Bangladesh (First contract) (EMS/TTM7, 8a, 8b)	Assist Sonali Bank improve its management capabilities and systems prior to major expansion throughout the country.

Note that the first five country programs have very specific and focused objectives relating to a single plan, a single institution or a commonality of institutions with similar problems, operating procedures and responsibilities. Morocco and Portugal were both very much more broadly focused and tended to focus on individual objectives in workshop projects. The Bangladesh EMS and TTM7 were more general--TTMs 8a and 8b focused exclusively on the Sonali Bank.

It may be that the sense of a seminar being more effective if it is single-minded is directly related to the "relatively" easier job of the faculty in such cases. It is much harder to advise on 20/30 totally different projects in a brief time than it is to concentrate on the same number of interconnected projects. The amount of work is the same; the amount of mind-switching from subject to subject is what changes.

The lesson here is that we won't really know which is more effective until we can in fact measure impact from individual seminars and then learn to place relative value on those impacts to make comparisons between seminars.

B. PROCESS

We experience the same difficulty here as we do in the previous section and as DS/RAD experienced in developing its management strategy paper.

The PCI Faculty endorses the belief that a combination of activities is more effective than one seminar. The TTM program provides a rich set of different examples with which to test the theory. The different processes used are shown below (current contract only):

Tanzania

a. Former TTM graduate from Malawi TTM seminar (1978) strongly urges Tanzania agricultural sector to sponsor seminar which would be attended by at least four staff from TRDB (graduate's organization);

b. Site visit;

c. Proposed seminar falls through due to local resistance at last minute to funding;

d. TRDB requests seminar for itself;

e. Bank actively involved in clarifying its own objectives and suggesting topics for practical workshops; visit to Washington by Bank advisor (sponsored by ACDI);

f. EMS, TTM, TTM scheduled;

g. EMS team on-site when EMS postponed; and

h. Final seminar series conducted: TTM (six weeks), EMS (one week), TTM (six weeks).

Barbados

a. Request for seminar/workshop received from CARICOM;

b. Site visit; and

c. Seminar/workshop conducted (three weeks).

Togo

a. Togo, Zaire and Guinea invited to participate;

b. Site visits to explain program in detail and set up participating country Task Forces to coordinate all arrangements, select participants and provide continuing support in the future for this project in particular and women entrepreneurs in general;

c. Prefeasibility studies in each country;

d. Feasibility studies conducted by host country experts; and

e. Seminar (six weeks).

Zaire

a. Participant from earlier program works hard within his government and with the USAID to attempt to bring the program to Zaire;

b. Site visits; and

c. Seminars (three each two weeks).

Bolivia

a. Site visit; and

b. Seminars (EMS - one week; TTM - five weeks).

Morocco

a. Site visit; and

b. Seminar (five weeks; some considerable time after the site visit).

Portugal I

a. Site visit; and

b. Seminar (five weeks).

Portugal II

a. Site visit (very brief); and

b. Seminar (five weeks).

In the Tanzania, Barbados and Togo seminars, ownership for the program as a whole was very much felt by the host country organizations involved. They were actively involved in clarifying exactly what they wanted the seminars to achieve and had clear continuing responsabilities after the seminars were completed.

To a lesser extent, this is true of NORMA, in Portugal; but NORMA will probably be content to continue to give these kinds of seminars without too much concern about whether institutional performance improvements occur as a result. On the other hand, if the demand for such seminars grows, and institutions in Portugal are willing to send their staff, then this should be adequate impact for this particular program.

The remaining seminars were organized with even less involvement by host country personnel. It was more a case of deciding that the program looked appropriate to the need for improving management skills and accepted at a more impersonal level.

We would predict, therefore, that the programs that incurred the greatest sense of "ownership" on the part of key people will have the most impact in the short-term, and possibly in the long-term.

It also suggests that more work is required prior to a seminar to ensure "ownership" is successfully transferred to or stimulated in key people needed not only to have a successful management training experience but to ensure longer-term impact. The seminar itself normally should be only one component of a larger series of steps necessary to achieve the desired impact. This does not mean that we would abandon using a seminar only when it is all that is wanted or can be afforded--a seminar itself can be used to help agencies or individuals define needed performance improvements and develop strategies for achieving them for future implementation.

3. PARTICIPANT SELECTION

In all cases this was left to host countries and USAIDs. Despite repeated requests to have participant names and brief bio-data information forwarded to PCI, only Bolivia complied with a tentative list. This did not prove to be a drawback. In all cases the participants turned out to be at the management level and general background anticipated from the site visit. Therefore, with a good site visit, it is not necessary to have a list of participants prior to the seminar; preferred, but not essential. This is particularly true when dealing with a seminar presenting a management science. There is a predictable series of management problems being faced by managers. Many of these "problems" are simply symptoms of deeper, underlying problems which are frequently the converse of the principles outlined in the science. By addressing these deeper issues and providing tools to create the analytical, problem-solving manager, many of the symptoms can be made to disappear or no longer be important enough to impede progress.

4. ADMINISTRATIVE

Most of the administrative problems (of which there were not many) arose from scheduling and funding of the seminars. Under the first contract, all seminars and participant board and lodging (for the most part) were funded from contract funds. The program had greater control in scheduling seminars. Missions and host countries were pleased to accept the seminars and none were cancelled at the last minute, or even rescheduled. The average cost per participant, including program development costs as well as participant board and lodging, was approximately $4,000 per participant.

Under the second contract, however, where a cost-sharing approach was utilized, the cost per participant excluding participant board and lodging (although included for Togo program) was $4,651. While discounting for the Togo program brings this figure closer to $4,000 per participant, it still excludes the participant board and lodging covered within the first contract.

A disproportionate amount of time was spent negotiating with individual agencies; the Tanzania seminar was a particular headache and an EMS was even postponed after the team arrived onsite.

An evaluation should attempt to determine which funding mechanism was more effective. While the latter was more difficult, time consuming and costly to administer, individual countries seemed more involved, to have "ownership" of the seminars and to have better understanding of what they wanted which may lead to greater impact in the long run. On the other hand, from the end results of these seminars themselves--observing individual participants from both contracts--individual motivation, which may matter most in the long run, was totally unaffected by the funding mechanisms.

5. CURRICULUM & TRAINING METHODOLOGY

This is perhaps the most important aspect of all. In all seminar situations, in all countries and with all managerial levels and sectors, the curriculum and training methodology worked..

Thus the program has universal applicability--emphasizing, we believe, that the program has accomplished what it set out to do: Establish management as a science providing principles that will allow further evolution of management engineering.

The recent USDA-sponsored workshop on management concluded that there does seem to be a management technology; DS/RAD's strategy paper on management in the 1980s appears to be saying the same thing. That this management technology is based on a rational science should be further tested and validated.

1. It is possible and practical to establish management as a science rather than an art, based on principles from which practice derives;

2. Those management principles are consistent with and set forth in the TTM curriculum as it has evolved;

3. These principles (as opposed to techniques), have been proven valid through tests and demonstrations with participants from all walks of life, 40 countries and diverse organizational settings;

4. These principles can be taught to selected LDC audiences in a program as short as one week, to almost all audiences in six weeks;

5. In a six-week program we can expect to achieve not just effective use by participants, but also equip them to train others and build/adapt management systems and processes of their own. Once these principles have been "transferred," we have taught the participants "to fish" rather than "given them fish"; and

6. The PCI PMS as adapted for TTM is the state-of-the-art in management technology as well as management science.

We also reached two unanticipated conclusions:

7. The TTM content is at least as, if not more, relevant to private sector than it is to public sector audiences; and

8. The TTM format, when coupled with feasibility analyses that define business opportunities, can provide potential LDC entrepreneurs with the competence and confidence to start private sector activities (profit making, job creating businesses) that squarely address development priorities.

The program has been very successful: AID should find some kind of mechanism to continue to provide:

1. TTMs aimed at the private sector (similar to the women-in-agribusiness seminar);

2. EMSs and TTMs aimed at single tasks, sectors or organizations;

3. EMSs and TTMs aimed at general audiences--allowing those audiences to sample TTM concepts to assess potential value for their organizations or curricula.

In addition, AID should:

4. Challenge and support university researchers to fairly test PCI's claim that TTM has begun to discover a management science;

5. Sponsor an international workshop open to former TTM graduates on their adaptations, innovations and the relevance to them in this work on the underlying management principles presented in the TTM;

6. Support IAMI (International Association for Management Improvement) and other mechanisms that help former participants stay at the forefront and evolve new management technologies;

7. Be confident of the relevance and value of TTM and the PMS; assume it works unless proven otherwise;

8. Develop and maintain a management evaluation office to collect and compare impact data and strategies to continually upgrade and disseminate our knowledge of what works and what does not. As a minimum all management improvement contracts should include a specifically funded evaluation component and a specific person charged with responsibility for its implementation;

9. In support of items 4, 5 and 7 above, conduct a rigorous evaluation of the TTM program using statistically significant random sample techniques and validation interviews. We do not recommend sole reliance on mail questionnaires.

THE BANGLADESH OBSERVER

দি বাংলাদেশ অবজারভার DACCA MONDAY MAY 21 1979

Appendix A

Management By Objective

-A. K. M. Fazlul Hoque

TTM GRADUATE, Bangladesh seminar 8a

MOST of the efforts made towards development give very poor result in some developing countries like ours. Instead of deriving result, some efforts create problems also. Now what are the main factors responsible for such occurrence? The causes may be different in different countries. In our country this is mainly due to lack of effective and modern management system. Possibly management is the setting of objectives. If it is not sure where we are going, we are liable to end up somewhere else. When any organisation/institution/firm or individual, before starting any work sets specific objectives to be achieved during and after completion of the work, and manage through all the events and activities towards such target, it is called "Management By Objective (MBO)" which is often found absent in our country. MBO can obviously contribute maximum accomplishments towards a set goal.

Sometimes works are started after planning and taking for the same Even then, the objectives are not stated clearly when vague terms are used for that. Management responsibilities are also unclear. Hence, to avoid unnecessary wastage of time, manpower, money and other valuable resources, MBO must strictly be introduced by eliminating restraining forces in every sphere of problem-solving and development approaches.

But MBO requires special management tools and discipline. Management concepts and approaches are changing day by day with change in circumstances Some effective and powerful management tools based on modern concepts are available in the present-day world. Most practical and powerful one of these is "Logical Framework (Log-Frame)" which ensures establishment of MBO as a discipline. In a nutshell:—"The Logical Frame Work" is a 4 x 4 Matrix concept. It consists of 4 rows and 4 columns. Any effort can be logically arranged and projected with the help of Log Frame It is a onepage concise summary of project elements and their relationship with each other. All types of activities of any organisation, institution or individual based on MBO can be projected with the help of Log-Frame. Project may be either of short-term or of long-term nature and short-term activities which require a few hours to be completed may also be projected.

A project is designed to transform limited resources into output (results) for the purpose of achieving specifically quantified and qualified objectives within scheduled time which can be log-framed in the following manner.

Logical Frame Work for summarising project.
Project completion date....
Date of this summary.....
Project Title ————

NS	OVI	MOV	Important Assumptions
Goal (G)			
Purpose (P)			
Output (O)			
Input (I)			

(a) Narrative summary (N. S.):—In this column activities and objectives are arranged according to their hierarchy. Project work starts from bottom level i.e. input level. This hierarchy is based on logic There is a definite cause and effect relationship between any level and level immediately above it. It is a set of linked hypothesis which means: if input—then output, if output—then purpose, if purpose—then goal.

(b) Objectively verifiable Indicator (OVI):—This column helps to verify the NS column specifying quality, quantity and time which brings concreteness and reduces abstractions by defining what will happen as a result of the project.

(c) Means of Verifications (MOVs):—These are the dependable sources of data required to verify progress or lack of progress. In absence of reliable MOVs indicator is not useful.

(d) Assumptions: — Lower level linked hypotheses will result achieving next higher level objectives if other factors beyond the control of project management remain in favour of the project These factors are termed as "Assumptions" So assumptions are those factors outside the project control which are necessary and sufficient for project success. More the probability of assumptions (favourable necessary conditions) more will be the probability of project success. Then firally: if input assumptions—then output if output assumptions—then purpose,

(Continued on page 6)

Management

(Continued from page 5)

and so on.

Log-frame approach is now used in U.S.A. Canada Thailand, Pakistan Philippines and other developing countries. This approach is taught in government and academic institutions in U.S.A. (logical framework is a part of graduate-level curriculum at U.S. Universities). It is tested and found that log-frame is practically applicable in any circumstance in any country.

We the people of Bangladesh possess inherent qualities (talents) which require only a fruitful system to utilise the same in productive purpose. If modern tools and techniques based on the concept of MBO as discussed above are provided followed by a well-devised training system, we are sure to contribute significantly: and development approaches will yield positive result at an optimun level with long-term impact.

What is needed today is to find out ways and means of utilising the latest technological invention for successful implementation of planning process in a developing country like Bangladesh.

50

MEMORANDUM

TO: Elaine
FROM: Jane
RE: Bangladesh--Follow-up visit to TTM Graduates by Dr. Lawrence Posner
DATE: October 16, 1979

Dr. Posner visited Bangladesh in late August, 1979 on non-AID business. Before his departure, we discussed with you the desirability of Dr. Posner taking advantage of this opportunity of being in Bangladesh to contact former TTM participants from the series of seminars conducted in Bangladesh in the latter half of 1978. You endorsed this idea and kindly forwarded a cable to the Mission to request assistance in making the appropriate contacts.

Dr. Posner recently returned from his Asian travels and the attached informal report covers his activities on behalf of the TTM program and the information he was able to obtain concerning the impact of the TTM series of seminars. Some of this information has already been forwarded to you. It is included again here for convenience (Appendix A).

I think you will be well pleased with the results to date, and the indications that the program will have a continuing impact for some time to come. Dr. Posner will be available for an oral debriefing if you feel further discussion would be helpful.

A FOLLOW-UP REPORT ON THE BANGLADESH TTM PROGRAM OF 1978

by Lawrence D. Posner, Ph.D., Practical Concepts Inc.

SUMMARY

TTM appears to have made an important impact at the Sonali Bank Training Institute (SBTI) and its parent institution, the Sonali Bank, which is the biggest bank in Bangladesh.

1. SBTI has adopted TTM training methods and reports substantial benefits from using flipcharts, team teaching, planning their training using the Logical framework approach, use of workshops, session summaries, etc.

2. TTM substantive material is being used to train 2000 rural branch managers. TTM is credited with the introduction of progressive and development oriented management systems in the Bank's two new departments: the Rural Credit Department (RCD) and Small Industries Department (SID). The expansion fits the high priority that USAID/Bangladesh gives to expanding agricultural credit.

3. TTM is credited with creating receptiveness at the top echelon of the Bank for a major reorganization of the head office that was just beginning in August and a future reorganization of the rest of the Bank. SBTI conducted two Executive Management Seminars (EMS) for 52 top executives using TTM methods and content. Mr. A.K. Rashid (Managing Director and Chairman of the Board) credits these seminars with successfully creating a new way to introduce change--i.e. to change motivation first and then introduce the new organization.

4. The reorganization is being planned by the Principal of SBTI, Azizul Huq, (TTM 7), who is using TTM planning methods including establishing project purpose with indicators of success, networking of tasks for scheduling, and planning an evaluation for the fourth month of a six month project to assess the progress to date and make adjustments based on experience.

5V

5. Other Banlgadeshi institutions turn to SBTI as a source of assistance to launch their own TTM-type training programs; specifically the Integrated Rural Development Programme (IRDP) planned to use SBTI instructors to launch its program at the Rural Development Training Center at the end of August.

6. SBTI felt it would be ready to host training programs for other institutions, particularly after its own reorganization had progressed far enough to provide direct evidence of the fruitfulness of the TTM content as well as the training methods.

In addition to the SBTI activities, there are active Bangladeshi training programs using TTM methods and substantive content including the following:

1. The Bangladesh Management Development Centre has taught ten sessio on "Project Management: Formulation, Appraisal, Implementation, Monitoring and Evaluation". One TTM graduate reports teaching 225 trainees so far in 4 week sessions for 25 senior and mid-level managers.

2. The Local Government Institute reports training 1200 trainees in 32 sessions for elected representatives and extension agents. Logframe and Perfnet were taught for project preparation in rural works, self-help projects, infrastructure development, and food-for-work activities.

3. The National Institute of Public Administration (NIPA) reports training 600 people; emphasizing Logical Framework. Their Own Village Development (OVD) Program handles 24 per month for two days before sending officials for a month to their own village. A second program handles 22 candidates per session.

4. The Secretary of the Ministry of Local Government, Rural Development, and Cooperative has been actively prodding IRDP to teach and apply the TTM management concepts based on his observation that other institutions are getting great value from it.

Source: Questionnaires and interviews by Lawrence Posner in Bangladesh in August, 1979 with graduates of the TTM programs in late 1978.

REPORT FROM LARRY POSNER ON RESULTS OF TTM TRAINING IN BANGLADESH, 1978

A. INTRODUCTION

The TTM Program of 1978 ended in Bangladesh with a specialized session for the Sonali Bank. The Sonali Bank Training Institute (SBTI) used TTM 7 to prepare five senior trainers and one training administrator. During this session, they selected and adapted materials for use at SBTI in a course for managers at their new agricultural branches. One week after TTM 7, the SBTI and PCI instructors jointly taught an Executive Management Seminar (EMS 8a) and the first group of 25 branch managers (TTM 8a). Following this seminar, SBTI (using six TTM trained instructors) taught the second group of 25 branch managers with only two PCI trainers present to serve as resources and coaches (TTM 8b).

After PCI's departure from Bangladesh, SBTI conducted two Executive Management Seminars for a total of 52 senior Bank executives. The Managing Director and Chairman of the Bank, Mr. K.A. Rashid, said he was amazed at the interest and involvement of these Bank veterans, personnel at the highest levels with 20-25 years of service with old-style banking practices that went out a decade ago in other countries.

B. SUPPORTING EVIDENCE

The Sonali Bank Managing Director, Mr. K.A. Rashid, offered to put his comments into a letter to PCI to confirm the value of the TTM program to the Bank and to encourage other institutions to take advantage of the program. Mr. Azizul Huq, the Principal of SBTI and reorganization planner, has offered to keep PCI informed about the progress of SBTI and to co-author an article about the experience of SBTI and other Bangladeshi institutions that are successfully using TTM concepts and pedagogy.

PCI has photos from SBTI to support an article for Front Lines. PCI also has questionnaires filled out by 17 SBTI TTM graduates, and selected materials from SBTI about its program.

C. OVERALL IMPRESSIONS ABOUT TTM RESULTS IN BANGLADESH

Dr. Posner's impression in Bangladesh was that some important changes have already come about which can be traced and attributed at least partly to TTM. These are results that are likely to yield a continuing stream of benefits in the future. In brief, it is an impressive story. The key facts for this judgement come from the experience of the Sonali Bank and its training institute (SBTI). The results can best be separated into the "impact on training" and the "impact on organizational performance." It is important to note that the Sonali Bank is the biggest bank in Bangladesh. Its expansion into agriculture is an important contribution to AID's efforts to expand agricultural credit and to give the Bank a development banking orientation.

D. CONCRETE RESULTS AT SBTI

1. Impact on Training

The Sonali Bank has found the substantive concepts of TTM and the training itself to be fruitful in modifying its own training programs. SBTI continues teaching TTM material to the branch managers (they ultimately need 2000 of them) and currently has a whole cadre of trainers. The Bangladesh Institute of Bank Management (BIBM) conducts similar courses for other banks. SBTI has been asked to provide experienced trainers to other institutions like IRDP (Integrated Rural Development Programme) to lauch their own training program at the Rural Development Training Institute (RDTI). SBTI is receptive to hosting TTM-type training for other institutions in Bangladesh and from abroad, particularly after their internal bank reorganization provides added evidence of the usefulness of the TTM concepts and training methods.

At SBTI it is clear they are using TTM in their training for both 1) high level managers and 2) branch managers for their agricultural branches which is a major growth area for the Bank and a high priority in the USAID program (agricultural credit). They comment particularly on the benefits of flipcharts, team teaching, Logical Frameworks for preparing training, session summary sheets and the use of workshops. They are proud of their new training approaches and techniques and of the fact that others now come to them as the TTM professionals.

2. Impact on Project or Organizational Performance

Beneficial results reported by Mr. K.A. Rashid include the following:

a. The best results have come in the "emerging functions" of the Bank where they make best use of TTM graduates. The new Small Industries Department (SID) and the Rural Credit Department (RCD) can be projectized, functionalized and organized along the lines TTM suggests. This is now being done. They are using management by objectives and participative management instead of the traditional authoritarianism. The key people in these departments attended the Bangladeshi-sponsored-EMS programs. It is possible for these new departments to use the new concepts without having to change the established procedures.

b. There is a plan to reorganize the head office of the Bank which will involve the top senior officers. It is planned to then spread the reorganization to the rest of the Bank over a six-month period. An evaluation is planned after four months and adjustments made as appropriate. The procedure used was a new approach for the Bank. By conducting their EMS programs first, they have created receptivity on the part of top management to changes in organizational structure that they (the top senior officers) would have previously resisted.

c. The detailed procedures of the Bank will have to change as the Bank grows and evolves. Previously, the procedures were all based on control; now there will be increased emphasis on promotional activities. The old procedures are now getting in the way. Change has come first in the Rural Credit Department where there were no old procedures. Change will come more slowly in the other departments.

d. The whole range of activities of the Sonali Bank have changed toward becoming a development bank. Forms are being changed to simplify procedures while incorporating the key points of the old forms. The old form had the needed information but the new form is more readable. TTM has helped with motivation, changing attitudes and the inner psychology of Bank personnel. TTM has caused people to ask 'why?' not just 'how?' and 'where?' They now ask "Why do it this way and what will be the results if we do it this way?"

In short, there are big-league changes going on in the Bank with clear links to TTM. There should soon be impressive fruits that can be clearly documented: plans, networks, logframes, etc. Let us now consider how we can capture the Sonali Bank situations when they occur and learn some useful lessons from them.

E. IMPORTANT INDICATORS OF CHANGE

What exactly are we looking for? Basically, we want to document indicators (and later evidence of achievement) that the old system is, in fact, changing in desirable ways and that TTM is an important causal agent. Further, we want to analyze what there was about TTM that contributed to the change, what, if anything, should be done to support the change or multiply its effectiveness, and identify those elements that should be incorporated into future TTM sessions to obtain similarly impressive results in other institutions around the world.

What is the evidence at this stage and how might we spot future changes? The leading indicators are available from the time of the EMS and the first TTM, in my opinion. TTM 8a and 8b were designed from the beginning to address an important management problem within the Bank (staffing the rural branches and making them oriented towards development). As a result, the Bank participants planned their use of TTM, obtained a level of involvement unprecedented in TTM, received a course molded to their particular needs, and involved enough Bank personnel to create a trained "critical mass" before PCI left the scene. They adapted their training materials, received nurturing from the top management of the Bank and generated momentum within the institution from the very start. These were certainly leading indicators that the rural branches problem was likely to yield impressive results and merited following as an institutional output from TTM, was not necessarily wedded to the fates of individual TTM graduates.

The success with the Bangladeshi-conducted EMSs in influencing top Bank executives was less predictable and perhaps more of a tribute to the Sonali Bank Training Institute and its artful use of the TTM tools and techniques. More digging should be done to see just what they did to get their changes through-perhaps interviewing some of the key actors after the big changes have been effected. If we can offer TTM as a way to change attitudes and create receptivity to modernizing organizations and management practices, that is truly impressive.

Important indicators within the Bank are and will be:

1. The original intent to effect change and the plans for the first EMS.
2. The reactions of the participants at the end of the EMS, including measures of attitude and receptiveness (with due caution about reactiveness, resistance to manipulation, etc.).
3. Plans to make innovations within the Bank and their relationship to the substance of the EMS, receptivity, strategy for implementation, human relations, etc.
4. Indicators of the success of the substantive changes and their relationship to TTM-type thinking.
5. Evidence of successful implementation and linkages.
6. Plans for next-generation efforts to make further Bank improvements.

All of this is doable. The Sonali Bank itself could collect and record much of it. They would probably benefit from help from outside in the analysis of what is going on that is working and why. The Bank could become a test-tube for watching what is a promising experiment in management improvement It has beautiful potential for spread effects, ~~through~~ using the Sonali Bank Training Institute itself to disseminate the success story through its own training efforts at institutions which it identifies as having potential for management improvement through TTM-type concepts, tools and techniques. Again, outside assistance would be valuable for multiplying the effects - it is not reasonable to ask SBTI to bear the burden of spreading this "gospel." But they are receptive to being the site and to participating in the training of other institutions in Bangladesh and from abroad. What a boost it would be to the Bangladeshi ego and psyche if they had something to teach the rest of the world (something they had in Comilla Academy but which is tarnished today)!

FROM: Larry Posner
RE: Follow-up visit to Bangladesh TTM graduates
DATE: 13 September, 1979

During the past two weeks I have made a point of following up on TTM result from the 1978 sessions to the extent that time was available. I got pretty good coverage of people in or near Dacca. The results below do not take account of the questionnaire (see attached pages for summary of the feedback questionnaire).

ACTIVITIES

Upon arrival I contacted Mike Sullivan of USAID, who set up a meeting including us, Mr. Gafur of USAID/Training, Azizul Haq (Principal of the Sonali Bank Training Institute [SBI]), Hassan Mahmud (Deputy Director at Sonli Bank for training and other activities) and Fariq Quadim (Deputy Director for Training at IRDP). At the meeting we discussed the progress in applying TTM concepts and techniques. We also set up a meeting for Saturday 5-8 pm at the Sonali Bank for all TTM graduates. This group grew to include the trainees who were taught by TTM graduates at Sonali Bank. The timing was hard to arrange because of Ramadan. Those who are observant would be fasting at 6:40 and want to be at their prayers by 8:30 pm. We timed it to get them after work, provided them a traditional IFTUR light meal to break the fast and adjourned in time for prayers.

The meeting of TTM graduates was attended by approximately 80 people including dignitaries from several institutions that employ TTM graduates i.e. the Institute for Local Government (ILG), the Management Development Centre (MDC), Bangladesh Institute of Bank Management, SB and IRDP. The program is attached. The major deviation was that visiting dignitaries were invited to speak and took too much of the time for discussion and questionnaires. The TTM questionnaire came after the "break-fast" and people did not complete them before departure. Many but not all forms

were returned later and undoubtedly more will tumble in later.

The meeting showed a sense of "elitism"; "we have been privileged to receive the "state of the art" in management training and we want to use it and teach it." In some places at SBTI they were proud of their TTM training and its impact. At MDC they have taught 6 sessions of a series of 9 with 4 weeks each for approximate 25 civil servants per session. IRDP has done little so far in training or use; they have sent four people to the MDC training so far. IRDP plans a TTM adapted to its needs on August 29th for 30 District and Thona-level officers. They have arranged to have SBTI instructors collaborate in the training because IRDP lacks confidence and the SBTI have the experience (and prestige) of the PCI assistance in 8a and 8b. RDTI is directed by Ashrafuddin Ahmed (TTM 7).

There was some techical discussion in the open session that suggested serious thinking about PMS as they teach it. For example, assumptions can be traced to more complex prior assumptions which in turn have their prior assumptions. How far should you go? How about the degree of explicitness and targeting for assumptions? The proformas for the planning commission overlap the Logical Framework; Are the areas not covered by the LogFrame indicators of the inadequacy of LF? How can the planning commission be convinced to use LF so the agencies will not consider it "extra" work which is not necessary?

At the TTM graduates meeting there was discussion of creating a Bangladesh chapter of the International Association for Management Improvement (IAMI). Serajul Islam described previous organizations with this objective. The most recent was founded after independence when the most attractive participants and supporters left for Pakistan. A questionnaire was circulated, to be returned later, on the interests of participants, their desire to participate, potential sources of income, etc. If PCI works in Bangladesh for two years, we could be enough of a catalyst to launch a viable group. In our absence, someone else will have to be more aggressive leading the effort.

Several institutions invited Dr. Posner to visit them, observe their programs (TTM and other) and make suggestions to help them improve their programs. I was able to follow-up at IRDP, SBT and, in a more limited way, with MDC. The other places worth visiting include BIBM, MDC, COTA, ILG, and perhaps NIPA.

September 13, 1979

SUMMARY OF SELECTED QUESTIONS FROM THE TTM FEEDBACK QUESTIONNAIRE ADMINISTERED BY LARRY POSNER IN DACCA, BANGLADESH IN AUGUST, 1979.

Total number of respondents: 31

---

*Question: How many people do you supervise?

less than 10 (13)
10-20 (5)
20-50 (3)
150+ (3)
0 (2)

(numbers in parentheses is number of respondents giving this answer)

*Question: Is your current position the same position that you had at the time you attended the TTM Seminar?

Yes (23) No (8) No response (0)

*Question: Since the TTM Seminar, have you applied any of the TTM concepts/ techniques you learned at that seminar to:

a. Programs	Yes(19)	No (5)	No response (7)
b. Projects	Yes (18)	No (5)	No response (8)
c. Management activities	Yes (18)	No (4)	No response (9)

d. Other (describe)

-articles published in the National English Daily and the Bangladesh Observer
-Training (13)
-Research (1)
-Organizational Change (1)
-Family matters (1)

*Question: Give some examples of those concepts/techniques used by you:

Logical Framework (21)
Development of Human Resources (1)
Leadership (1)
PMS (3)
Motivation theory (2)
Evaluation (1)
Decision Making (2)

Training Techniques and Theory (10)
Team building (1)
Problem Solving (1)
Performance Networking (9)
Gantt Charts (1)
Feasibility Study (1)
O & M (1)

---

*Question: What was the result of their use?
Positive (26) No response (5)

*Question: If you have not applied the TTM concepts/techniques, why not?

Organizational problems - institution did not use graduates properly (2)
- concepts not commonly understood by all in the institution (1)
- not enough people in institution trained in TTM to effect change (1)

TTM Content - Concepts taught not applicable to banking situation (2)

---

*Question: To your knowledge, has the application of any of the TTM concepts/ techniques brought about positive change i.e. increased efficience, coordination etc.?
Yes (25) No (0) Don't know (3) No response (3)

---

*Question: To your knowledge, has any office,Division,Ministry, Company, Project/Program, etc. endorsed any TTM concepts/techniques to be learned and applied systematically by its entire staff?
Yes (17) No (3) Don't know (9) No response (2)

---

*Question: Since the TTM Seminar, have you trained other individuals in any of the TTM concepts/techniques you learned at that seminar?
Yes (20) No (6) No response (5)

*Question: How many training activities have you undertaken to transfer TTM concepts/techniques?

2-3 training activities	(7)	
4 " "	(8)	
5-10 " "	(5)	
32 " "	(1)	

*Question: What is the total number of trainees that have attended such training activities?

40 trainees	(2)	80
50-70	(4)	200
90	(2)	180
100	(4)	400
150	(4)	600
200	(2)	400
300	(1)	300
600	(1)	600
1200	(1)	1200

Total: 3950 participations!

*Question: What is the average length of your training activities?

4 weeks	(4)
5 weeks	(2)
2 weeks	(1)
2 hours	(2)
4 hours	(3)
6 hours	(1)
20-36 hours	(3)
120 hours	(3)

*Question: In general, which TTM concepts/techniques most frequently have been the subject matter of your training activities?

Logical Framework (18)
Evaluation (7)
Feasibility Study (7)
Human Resources (2)

Training concepts and techniques (8)
PMS (6)
Problem Solving (1)
Performance Networking (8)

---

*Question: How many of your trainees work directly with the socially and economically disadvantaged segments of your population?

100% (5)
75% (2)
50% (2)
None (1)
One trainee (1)
20 trainees (5)
60 trainees (1)

90% (1)

No response (13)

---

*Question: How many of your trainees work indirectly with the socially and economically disadvantaged segments of your population?

100% (3)
80% (4)
60% (2)
50% (4)
25% (2)
10% (1)
0 (2)

No response (13)

---

*Question: Have any of your TTM colleagues assisted you in any of the above training activities?

Yes (18) No(8) No response (5)

If yes, how many colleagues have assisted you?

one (1)
two (3)
three (4)
four (1)
six (3)
eight (1)
ten (1)

No response (4)

*Question: Are any of the trainees to whom you provided training in TTM concepts/techniques now using any of those concepts?

Yes (15) No (1) Don't know (8) No response (6)

---

*Question: Has your training in TTM concepts/techniques become part of a regular training program for your institution?

Yes (23) No (5) No response (3)

---

*Question; To your knowledge, has the training of other persons in TTM concepts/techniques brought about positive change?

Yes (12) No (2) Don't know (15) No response (2)

---

*What TTM concepts/techniques have you used and with what frequency?

Concept/technique	Used once	More than once	Plan to use in future
Logical Framework (23)	(3)	(18)	(16)
Training techniques & theories (19)		(18)	(12)
PMS (11)		(9)	(9)
Performance Networking (9)		(7)	(7)
Feasibility Study (7)		(7)	(7)
Evaluation (9)		(9)	(7)
Human Resources (6)	(2)	(4)	(4)
Problem Solving (5)		(5)	(4)
Resource Allocation (3)	(1)	(1)	(2)

APPENDIX B

Translation

MINISTRY OF LABOR AND SOCIAL SECURITY
NATIONAL TRAINING SERVICE - SERVICIO NACIONAL DE APRENDIZAJE - SENA
IBAGUE • COLOMBIA • P.O. BOX 768

Ibagué, March 23, 1981

Dr. Leon Rosemberg
President, PCI
1730 Rhode Island Avenue NW
Suite 200
Washington DC 20036
U.S.A.

In 1977, I received training in the Project Management System (PMS) in Quirama, Colombia, South America. At present, I am still a business advisor with the Community Development Unit, which devotes its efforts to both urban and rural sector programs and projects, especially those of a social and technologieal nature.

As my own contribution towards solving more immediately the problem of training of trainers of said Unit, I submitted a proposal for conducting the PMS course, which was accepted with no objection. As a result, there are at present eleven (11) trainers receiving such training.

I have promised the participants in the course to write to you and ask you to incorporate their names in your files, so that they may receive periodically the information you send us for those we had the opportunity of training in your methodologies.

Also, three (3) of my fellow business advisors have become familiar with the information you send us, and also wish to receive it from you, since subjects dealing with Management are of great interest and usefulness to us in our work with businesses.

I am also interested in training in project evaluation, and management aspects that I would like to know more thoroughly, something which would be possible if you would include my name for the forthcoming courses; these would give me valuable additional knowledge regarding the functions performed in my work.

Below is a list of the names and addresses of the persons concerned:

Trainers presently attending the PMS course:

1.	Lino Rodríguez	Cra 2 No. 45-57
2.	Leonel Castro	Cra 5A No. 6-52
3.	Marco A. Arenas	Urbanización Valparaiso Manzana C Casa 52
4.	Miguel Thomas	Calle 37B No. 6-79
5.	Alvaro Sierra	Multifamiliares el Jordan Bloque 41 Apto 302
6.	Luis A. Romero	Manzana 72 Casa 14 Octava etapa Jordan
7.	Ildenfonso Sanches	Calle 78 No. 3-49 Jardin Altonsure
8.	Victor M. Ariza	Cra 2 No. 37B-22 Barrio Los Martires
9.	Francisco Velasquez	Calle 58 No. 6A-05 Barrio Limonar
10.	Nohemí Gómez	Cra 12 No. 5-38 San Diego
11.	Ariel Orjuela	Cra 2 No. 42-72

Business Advisors:

1.	Rogoberto Cruz	Sena Apdo 768
2.	Enrique Andrade M.	Apdo 768 Sena
3.	Marco T. Quiroga	Sena Apdo 768

All the above addresses are in Igagué, Colombia S.A.

I trust that you will be able to comply with my requests, and I remain

Yours very truly,

Eduardo Quesada F.
Calle 59 No. 5-75
Ibagué - Tolima - Colombia S.A.

ORGANIZACION INTERNACIONAL DEL TRABAJO

Proyecto OIT/RFA/77/RLA/6
Apoyo de las Cooperativas a las Actividades de Desarrollo
asistidas por el Programa Mundial de Alimentos.

September 30th 1980

Ref.

Dear Madam ,

Thank you very much for the forwarding of the material which I requested im my letter of July 8th. I was on holiday, this being the reason that I could not answer your letter before.

I am now going through all the material and I am getting more interested in the "Marco Logico" by the hour. Is there any chance that I could participate in a "Training of Trainers in Management Program Seminar " ? It would be helpful, if you could give me guidelines in how to apply.

Secondly I would appreciate it if you could send me the Project Management System and Logical Framework booklets, which will be published in October.

Thirdly I would be most interested in receiving some more information about Practical Concepts Incorporated.

We will be organizing three more courses on the "Marco Logico" in Panamá and Honduras this year with the assistance of one of the participants to the seminar In Columbia in 1977. This will bring the total of "Marco Logico" courses organized by our project on five.

Thank you very much for your assistance. We will keep you informed.

Sincerely,

Marius de Gaay Fortman

APARTADO POSTAL: 10170
Cablegramas: INTERLAB
TELEFONOS: 22-95-33
22-97-11
33-15-50
TELEX: 2349

Calle 32 No. 86 S. Esquina Ave 2a.

Translation

FEDERATION OF YOUTH COMMUNITY DEVELOPMENT
FEDERACION DESARROLLO JUVENIL COMUNITARIO

Save the Children

P.O. Box 333
TEGUCIGALPA, D.C. HONDURAS, C.A.
Tel: 22-7526

MEMORANDUM

TO: Albertina Centeno
AID/Honduras

FROM: (Miriam de Maldonodo
for) Alejandro Corpeño

DATE: 18 August 1980

SUBJECT: LOGICAL FRAMEWORK

Please find attached the material regarding courses I have organized to train:

1) Social workers from the National Social Welfare Council in collaboration with the International Labor Office (area office in Costa Rica) and Consuplane.

2) Community action workers from the National Electric Power Company for the resettlement of population of the El Cajón Project.

3) Course conducted for the Caxchiqueles of Comalapa, Guatemala, at the Tikonel Nau Papa Cooperative.

4) Course for IMAS (Instituto Mixto de Ayuda Social - Joint Social Aid Institute) in Costa Rica in collaboration with the International Labor Office (attached please find text of this course).

5) Request from Mario Cerna B., Commercial Attaché, Embassy of Nicaragua, Washington.

I should add that I maintain a file of all these persons, so that they may send their work for correction during the six months following the introductory course. Thus, the training will continue in their actual work setting. I have in my office the Logical Frameworks of all students.

I should also mention that I have added to the course a simple investigation method to determine the Start of Project Status, an electric model of Logical Framework for explaining the vertical logic and the assumptions.

The objective of this memorandum is that AID note what use I have made of the knowledge acquired during the Seminar that Practical Concepts Inc. conducted under AID contract in Antioquia, Colombia, and entitled "Training for Trainers - Project Management System."

P.S. I believe that there exists a very good opportunity for PCI to conduct a seminar for the Consuplane experts and senior officials of the JNBS (Junta Nacional de Bienestar Social - National Social Welfare Council). Also, the Faculty of Economics and Political Sciences has approached me regarding a course for senior Management students who are working in the Study and Work Centers as part of their requirement for their graduation thesis.

cc: Mr. Jairo Arboleda
Practical Concepts Inc.
Files

Translation

EMPRESA NACIONAL DE ENERGIA ELECTRICA
NATIONAL ELECTRIC POWER COMPANY

TEGUCIGALPA, D.C., HONDURAS, C.A.

CABLE "ENEE" P.O. BOX 99

Tegucigalpa, D.C., July 3rd, 1980

Mr. Alejandro Corpeño
Director
Federation of Youth Community Development
P.O. Box 333
Tegucigalpa, D.C.

Dear Mr. Corpeño:

I should like to thank you for having participated in the Project by conducting the course of PROJECT DESIGN USING THE LOGICAL FRAMEWORK for community action workers with the Population Resettlement Bureau.

I would like you to know that courses such as the one you conducted for these community action workers are very useful to us, since they help them in their work.

Having nothing further to discuss, I remain

Yours truly,

Leslie Chaves
Coordinator,
Population Resettlement Program

cc: Files

Translation

INTERNATIONAL LABOR ORGANIZATION OIT ORGANISATION INTERNATIONALE DU TRAVAIL
AREA OFFICE IN SAN JOSE BUREAU A SAN JOSE

ORGANIZACION INTERNACIONAL DEL TRABAJO
Oficina en San José, Costa Rica

July 3rd, 1980

Ref. 128-80
HON/GRAL
COS/GRAL

Mr. Alex Corpeño
Director,
Federation of Youth Community Development
P.O. Box 333
Tegucigalpa, Honduras

Dear Mr. Corpeño:

I am pleased to be writing to you in order to formalize in writing our telephone conversation of June 24 in which we discussed the possibility of your conducting the course on "Project Management System" in Costa Rica in August 18-22 of this year, and in which you confirmed your acceptance and availability for this date.

I appreciate your willingness and take this opportunity to send you more information regarding the number and level of participants, as well as other particulars regarding the mechanics of the course.

- Organization of the course will be the responsibility of Mr. Josip Margetic, project specialist.

- About 20 officials of the Joint Institute of Social Aid (IMAS) in Costa Rica will attend, the majority being social workers. As regards their level, some hold university degrees, the majority being university students.

As discussed with you and with persons of the National Social Welfare Council (JNBS), five students of the course conducted by yourself in Honduras will be invited to participate. I am sending letters of invitation for the respective students to JNBS. Also invited as observers are two officials of the National Directorate of Renewable Natural Resources (Dirección Nacional de Recursos Naturales Renovables - RENARE) in Panamá.

The office of the United Nations Development Program in Tegucigalpa is happy to provide you with the air fare for the Tegucigalpa - San José - Tegucigalpa trip. The per diem corresponding to your stay in Costa Rica will be paid to you by the ILO area office in San José.

During your stay in San José, we will take the opportunity to discuss the possibility of funding small projects in coordination with your institution.

Finally, I avail myself of this opportunity to confirm the date of August 25-29 for the course on Project Management System to be conducted in Sabanagrande (Honduras). This course will be conducted for the second group of social workers that did not attend the first course.

Wishing you the best, I remain,

Yours truly,

Manuel Asuero

75

APPENDIX C

INFORMAL ASSESSMENT OF IMPACT OF EGYPT TRAINING,

OCTOBER 19, 1979

Conducted by TTM Faculty Member, Itil Asmon

"For the past few weeks I've been meaning to write you to report the conclusions of an informal evaluation I had been making regarding the results of the TTM course in Egypt, but was delayed because of some trouble in getting hold of the C.A.O.A. (Central Agency for Organization and Administration) people to double-check what I had heard from the Police Academy people. Finally I did (and it checked)...

Facts

1. The only TTM/Egypt graduates who are actually using and/or teaching any of the TTM subjects are the three police officers: Colonel Abd Al Halim Amin (who is responsible for the training of all police officers in Egypt), Colonel Mamdah Al Badri (technical advisor in the Ministry of Interior--how started a one-year course in the College for Superior Studies...and General Ahmad Abd Al Haq Rifai (now chief of personnel for all policemen in Egypt). Of the C.A.O.A. people who attended the course or other participants, none are applying or teaching what they have learnt. The Association for Management Training, started by the course graduates, never got past the preliminary meetings and is inoperative.

2. The policemen are not teaching any of the LogFrame or PMS materials. What they do teach (to all police officer trainees in Egypt) is a fairly complete version of the human-relations part of the TTM, including:

   - Brainstorming (ask participants to invent different uses for a bicycle; categorize into economic and social benefits);
   - Communications (distortion of a message through passing several persons);
   - Creativity exercises:
     - -- How many squares?
     - -- Making one paper clip loop out of four chains of three clips each by opening and closing only three clips;
     - -- 20 questions (how irrelevant data masks the relevant information; and
     - -- Old lady/young lady (apparently came as a shock to some trainees to realize that both they and another person may be correct in seeing the same thing differently).

   The above comprised only four hours in a three-month course dedicated mainly to teaching police officers the specifics of their future jobs, but it elicited high interest and the trainees want more of it.

3. In addition, Colonel Abd Al Halim Amin has actually developed a Log-Frame in his proposal for a pan-Arab college for security (police) studies.

4. If we assume that PMS materials comprised 4/5 of the TTM program and the human relations aspects 1/5, and if we estimate that a person's applying the materials is worth 1/2 of a person's teaching them, then (taking as the unit the ideal situation of a trainee teaching all he has learnt), the results of the course have been:

- Colonel Amin - 1/2 X 4/5 (PMS) + 1/5 (human relations)	=	3/5
- Colonel Al Badri - (human relations)	=	1/5
- General Rifai - (human relations)	=	1/5
TOTAL trainer-equivalents		1

Thus the direct results have been the quivalent of one TTM trainer out of 36 participants, or 1/36 ± 3%. Bending over backwards to find additional benefits, we might estimate the direct results of the course as 5% of the planned results.

5. According to the above, the congruency diagram for the course might look like this approximately:

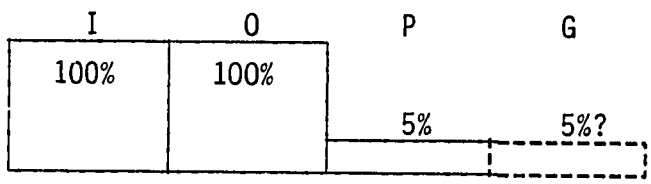

6. In the long run, the educational benefits of the course (education being defined as a long-term process which forms a person's mentality and attitudes) might far outweigh its training benefits (defining training as a process for teaching a person specific applicable skills). The educational benefits, as is often the case, are irrelevant to the subject being studied (as in the classical example of the British training of "an officer and a gentleman" through teaching Latin and Greek). In this case, the educational benefits may be:

- Making the participants more goal-oriented and more accustomed to thinking in terms of actions and results;
- Making the participants accustomed to learning-by-doing and to teamwork; and
- Getting the participants used to plain hard work, including night work (a participant told me once, "I have never seen Egyptians working that hard!").

To this one should add the unquestionable skill benefit of the participants becoming all more fluent in speaking, reading and writing English.

The above educational benefits may be considerable; however, not only are they unquantifiable, but (more relevant), they have not been included in the original course LogFrame as the intended results of the training, and thus I don't believe they could be fairly claimed now as a justification for the TTM training.

7. The C.A.O.A., which was the main client, did not see TTM as answering their perceived needs. I've heard that Minister Hassan Taufig originally was not in favor of the course conception, but he apparently chose not to look a gift horse in the mouth. The C.A.O.A. is into improving routine overall administration, not project management, and consider that their need is to turn their staff into capable trainers of the conventional administration subjects (personnel, materials and financial management). While a case can be made for projectizing routine administration (through PMS, PPB, etc.), one might fairly ask how far did such projectizing get in practice even in the U.S. The general Egyptian administration considers that its improvement and consequently its training needs are a lot more basic than that.