PN-AAR-718
ISN 37480

WATER AND SANITATION FOR HEALTH PROJECT

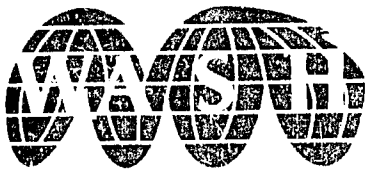

Operated by
CDM and Associates

Sponsored by the U.S. Agency for International Development

1611 N. Kent Street, Room 1002
Arlington, Virginia 22209 USA

Telephone: (703) 243-8200
Telex No. WUI 64552
Cable Address WASHAID

The WASH Project is managed by Camp Dresser & McKee International, Inc. Principal cooperating institutions and subcontractors are: Associates in Rural Development, Inc.; International Science and Technology Institute, Inc.; Research Triangle Institute; Training Resources Group; University of North Carolina at Chapel Hill.

FIELD EVALUATION OF STEEL FABRICATED HANDPUMPS FOR THE USAID/DOMINICAN REPUBLIC HEALTH SECTOR II PROJECT

WASH FIELD REPORT NO. 139

FEBRUARY 1985

Prepared for:
USAID Mission to the Dominican Republic
Request Memorandum No.106

WASH FIELD REPORT NO. 139

FIELD EVALUATION OF STEEL FABRICATED HANDPUMPS FOR THE USAID/DOMINICAN REPUBLIC HEALTH SECTOR II PROJECT

Prepared for the USAID Mission to the Dominican Republic
under Request Memorandum No. 106

Prepared by:

Ken McLeod
and
David Donaldson

February 1985

Water and Sanitation for Health Project
Contract No. 5942-C-00-4085-00, Project No. 936-5942
is sponsored by the Office of Health, Bureau for Science and Technology
U.S. Agency for International Development
Washington, D.C. 20523

TABLE OF CONTENTS

Chapter		Page
	FOREWARD	iii
1.	BACKGROUND	1
	1.1 Locally Produced "Steel" Handpump	1
	1.2 Preparation for Field Visit	2
	1.3 Field Visit	3
	1.4 Discussions in Washington	3
2.	SUGGESTED SELECTION CRITERIA FOR SUITABLE HANDPUMPS FOR A COUNTRY PROJECT	7
	2.1 Factors Affecting Long-term Success	7
	2.2 Criteria for Evaluating Handpumps	8
3.	FIELD VISITS	11
	3.1 General	11
	3.2 Summary of Field Visits	11
	3.3 Findings	12
	3.3.1 Protecting the Ball Bearings from Rainwater	
	3.3.2 Examining the Handle Pivot-Bearing Assembly	
	3.3.3 Designing the Sanitary Seal Between the Handpump Base and Platform	
	3.3.4 Protecting Base Bolt from Standing in Water	
	3.3.5 Modifying the Pin Connection at Quadrant and Drop Rod	
	3.3.6 Upgrading the Strength of the Chain	
	3.3.7 Upgrading the Quality of Leather Cups	
	3.3.8 Fastening the Plunger to the Drop Rod	
	3.3.9 Standardizing Equipment	
4.	OBSERVATIONS AND RECOMMENDATIONS	23
	4.1 General Remarks	23
	4.2 Handle Pivot-Bearing Assembly	23
	4.3 Chain Assembly	27
	4.4 Spragg Base to Mount Pump	27
	4.5 Maintenance	31
	4.6 Below-ground Equipment	31
5.	FUTURE COURSES OF ACTION	33
	5.1 Discussion of Alternative Courses of Action	33
	5.2 Results of Field Test for the "Steel" Handpump	34
	5.3 Recommended Actions by S&T/H/WS and USAID/DR	35
	5.4 Recommended Actions by USAID/DR	35
	5.5 Installation and Maintenance of the "Steel" Handpump	36
	5.6 Disposal of Existing Cast Iron Pumps	36

Chapter | Page

REFERENCES..... 39

APPENDICES

A. Reports on Field Repairs to "Steel" Handpumps Being Tested by SESPAS..... 41
B. Description of India MK II Handpump..... 67
C. "Blair"-Type Pump Being Tested in Papua New Guinea..... 73

TABLES

1. Characteristics of a "Steel" Handpump..... 1
2. Summary of Field Visits and Review of Maintenance Records..... 4
3. Results of Leather Buckets Evaluated by Lund University..... 30
4. Alternative Courses of Action to be Considered by USAID/DR..... 33

FIGURES

1. India MK II Production Drawings..... 24
2. Handle Assembly Parts..... 25
3. India MK II Production Drawings..... 26
4. India MK II Production Drawings..... 28
5. Spragg Base to Mount Pump Set in Cement Platform..... 29
6. Special Tools India MK II Manual.....

FOREWARD

In developing this report, the WASH Project, during December 1984, used the services of Mr. Ken McLeod, a mechanical engineer, to review the field results of the "Steel" fabricated handpump, to evaluate the possibilities of producing such a steel handpump in the Dominican Republic, and to advise regarding elements that needed to be upgraded. The Project's Associate Director for Engineering and Technology Transfer, Mr. David Donaldson, participated with Mr. McLeod throughout this assignment. This assignment was undertaken as a result of a request by USAID's Bureau for Science and Technology in the Office of Health.

In developing this report, the Project drew heavily on the observations and recommendations of Mr. McLeod. These were incorporated into the chapters on observations and recommendations. Following discussions in LAC/ENGR, S&T/H/WS, USAID/DR and WASH, Mr. Donaldson suggested future courses of action (see Chapter 5).

Chapter 1

BACKGROUND

1.1 Locally Produced "Steel" Handpump

In 1983, the USAID Mission in the Dominican Republic (DR) suspended construction of the locally manufactured cast iron AID-type handpump after three years of operation. The Mission took this action after a review of quality-control problems that were being experienced in the manufacturing and field installation process. The problems encountered were:

1. Insufficient numbers of handpumps for installation in the field;
2. Large rejection rates of the pumps being delivered to the rural water program of Servicio Especial de Assistance Social (SESPAS); and
3. Excessive demands on national and local maintenance efforts.

To explore the option of producing a locally manufactured "Steel" fabricated handpump with a ball bearing handle support system, S&T/H/WS contracted with the Georgia Institute of Technology (GIT) to build two prototypes, to assist local manufacturers in producing 12 more prototypes, and to assist SESPAS in installing the "Steel" pumps in the field for testing.

This option was one of several that was explored to find a handpump that SESPAS could use to complete its contractual obligations under the Health Sector II loan of providing drinking water to the rural population (see Table 1 for the characteristics of the "Steel" handpump, shown in Illustrations 1 and 2).

Table 1

Characteristics of a "Steel" Handpump

Materials Used for Fabrication:	4-inch steel pipe and 3/8-inch steel plate
Mechanical Advantage:	Six to one
Production Rate:	In excess of four gallons per minute, with a two-inch cylinder
Bearing Support System:	Ball bearings with press fit fulcrum pin
Place of Manufacture:	The design should be such that a high quality pump can be machined and welded by local machine shops under rigid quality control measures at a rate of 50 to 100 per month.
Price:	The price should be equal to or less than the landed price of an India MKII handpump (+/- US $250).

Illustration 1. Locally manufactured "Steel" fabricated handpump with ball bearing handle support system being field tested in the Dominican Republic.

Illustration 2. Maintenance crew from national Rural Water/Sanitation working on the above-ground elements of the "Steel" handpump.

1.2 Preparation for Field Visit

In late 1984 USAID's Pipeline Review Committee for Dominican Republic projects raised a number of issues regarding the Health Sector Loan II Project. Specifically, the committee examined which, if any, handpump should be used by SESPAS in the rural water component of the loan.

To help resolve a number of issues surrounding the handpump question, WASH was asked to provide an expert who would review the field testing of the "Steel" pump. In response, WASH selected an engineer, Mr. Ken McLeod, who had been one of the developers of the India MKII handpumps and a member of the World Bank Handpump Project. He was accompanied in the field, as well as at review meetings, by Mr. David Donaldson, WASH's Associate Director for Engineering and Technology Transfer (ETT). This report focuses on their observations and recommendations.

Prior to going to the field, Messrs. McLeod and Donaldson reviewed documentation from the field regarding the "Steel" handpump and its field testing (James, 1984) and met with various officials from the Bureau for Latin America and the Caribbean (LAC). They also reviewed the design criteria for the Dominican Republic (DR) handpump with the GIT designers and disassembled the model of a third generation of the DR pump, which had been modified to include a heavier handle support system. In early December 1984, the two consultants visited the Dominican Republic to observe and report on the field testing of the "Steel" handpump.

1.3 Field Visit

At the start of their visit to the Dominican Republic, the consultants were briefed by the USAID Mission. They were then accompanied to the field by SESPAS maintenance crews and by an AID Engineer, Mr. Manual Valdez, who assisted in inspecting 15 of the 16 handpumps being field tested. In addition, Mr. McLeod visited several local manufacturers and suppliers to assess the DR's capability to produce the 750 steel handpumps needed before November 1985.

During the course of the visit, eight handpumps were disassembled in the field and SESPAS maintenance records were reviewed and tabulated (see Table 2 on the following pages and Appendix A).

1.4 Discussions in Washington

Following the field trip, the consultants held a technical debriefing for AID's LAC engineering and health project officers, the World Bank, PAHO, and the Inter-American Development Bank. Further discussions with LAC engineering and health officers focused on the feasibility and desirability of producing a locally manufactured "Steel" handpump versus the purchase of units currently being produced in the United States or elsewhere.

Table 2

Summary of Field Visits and Review of Maintenance Records

		P1 Eulogia Gonzales (Has Shielded Bearing Nachi 60012)	P2 Julio Antonio Melo (Near Irrigation Canal)	P3 Clinco de Carreton	P4 Manuel Cormona	P5 Tomas Cormona	P6 Milagros Mejca	P7 Olga Polanco (Near Irrigation Canal)	P8 Jose Perez
Basic Data									
1. Depth to Static Water Level		20'	11½'	12½'	14½'	29½'	18'	7'	12 '
2. Depth of Well		59'	49 '	30½'	60 '	61 '	72'	47'	24½'
3. Pipe Installed		50'	40 '	20 '	50 '	50 '	60'	40'	15 '
4. Manufacturer		Cedeño	Cedeño	Cedeño	Senra	Senra	Cedeño	Cedeño	Cedeño
5. Date of Installation		1/23/84	1/24/84	1/24/84	1/25/84	1/25/84	1/28/84	1/28/84	28/1/84
Number of Visits		5	3	4	1	1	5	4	6
Record of Repairs									
Item	Frequency								
1. Piston Cage Cane Unscrewed	8	06/25/84	06/25/84	12/04/84	---	---	5/31/84	4/12/84	---
2. Have Changed Leathers									
- Damaged on Removal	1	06/25/84	---	---	---	---	---	---	---
- Bad Condition	3	---	---	---	---	---	---	4/12/84	---
3. Base Allows Leakage into Well	5	12/04/84	12/04/84	---	---	---	4/12/84	4/12/84	12/04/84
4. Rust at Base	4	12/04/84	12/04/84	---	---	---	---	4/12/84	12/04/84
5. Rust at Bearings	2	12/04/84	---	---	---	---	---	4/12/84	---
6. Needed to Adjust Leathers	1	---	---	11/07/84	---	---		Uses	---
7. Chain Pins Worn or Bent	5	---	---	12/04/84	---	---	5/31/84 --	Chain --	4/12/84 ---
8. Leathers Swollen and Piston Stuck	1	---	---	---	---	---	4/16/84	Links	---
9. Ball Bearings Broken	10	---	---	---	---	---	5/31/84-10/24/84	---	10/24/84-11/08/84
10. Main Pin Worn	7	---	---	---	---	---	5/31/84	4/12/84	12/04/84
11. Out of Service (Damage not Detailed)	0	---	---	---	---	---	---	---	---
12. Chain Links Show Wear	2	---	---	---	---	---	---	---	12/04/84
13. Pump Rods weighted for Gravity Return	1	---	---	---	---	---	---	---	---
14. Replaced Head (Pump was out of Service)	1	---	---	---	---	---	---	---	---
15. Check valve not Functioning (No Reason)	3	---	---	---	---	---	---	---	---
16. Chain Broken (58 Repair Actions in ± 1 Year)	3	---	---	---	---	---	---	---	---

Table 2 (cont'd)

	Frequency	P9 Alejandrina Gonzales (Has Sealed Bearings Nachi 6001 NSL)	P10 Marta Martinez	P11 Elsa Lugo (Has Sealed Bearings Nachi 6001 NSL)	P12 Pura Corona	P13 Las Cielabras	P14 Las Barroas	Hania (Deepest Well Highest User Loading)
Basic Data								
1. Depth to Static Water Level		39'	11½'	28'	8'	---	Deep Well	±160'
2. Depth of Well		62'	34½'	60'	46'	---	---	±180'
3. Pipe Installed		55'	25	50'	30'	---	---	---
4. Manufacturer		Marino	AID Modified	Cedeño	AID Modified	GIT	GIT	GIT
5. Date of Installation		1/29/84	1/30/84	1/30/84	1/31/84	---	---	1/84
Number of Visits		9	---	2	---	1	3	9
Record of Repairs								
Item	**Frequency**							
1. Piston Cage Cane Unscrewed	8	9/06/84	---	---	---	---	---	5/31/84-2/04/84
2. Have Changed Leathers								
- Damaged on Removal	1	---	---	---	---	---	---	---
- Bad Condition	3	9/06/84	---	---	---	---	11/29/84	---
3. Base Allows Leakage into Well	5	---	---	---	---	---	---	---
4. Rust at Base	4	---	---	---	---	---	---	---
5. Rust at Bearings	2	---	---	---	---	---	---	---
6. Needed to Adjust Leathers	1	---	---	---	---	---	Uses Chain Link	Put in Chain Link
7. Chain Pins Worn or Bent	5	Uses Chain Links	---	---	---	Uses Chain Link	11/29/84	9/26/84
8. Leathers Swollen and Piston Stuck	1	---	---	---	---	---	---	---
9. Ball Bearings Broken	10	4/23-4/31-6/25	---	12/4/84	---	---	11/29/84	6/29/84
10. Main Pin Worn	7	4/31/84-6/25/84	---	---	---	---	11/29/84	9/29/84
11. Out of Service (Damage not Detailed)	0	---	---	---	---	---	---	---
12. Chain Links Show Wear	2	---	---	---	---	11/29/84	---	---
13. Pump Rods weighted for Gravity Return	1	---	---	---	---	---	---	---
14. Replaced Head (Pump was out of Service)	1	6/23/84-7/24/84	---	---	---	---	---	---
15. Check valve not Functioning (No Reason)	3	9/06/84	---	---	---	11/29/84 (1-1½')	11/29/84 (1")	---
16. Chain Broken (58 Repair Actions in ± 1 Year)	3	12/04/84	---	---	---	---	---	7/24/84-/26/84

Chapter 2

SUGGESTED SELECTION CRITERIA FOR SUITABLE HANDPUMPS FOR A COUNTRY PROJECT

2.1 Factors Affecting Long-term Success

The long-term success of a rural water supply project is highly dependent on the handpump unit selected. If the unit is not durable and long-lasting, then the project will lose credibility with the beneficiary and demoralize those involved in trying to provide the long-term maintenance needed by these pumps.

During the past ten years, most handpumps have specifically been developed on the premise that to gain credibility and acceptance at the village level, a pump must operate for a minimum period of one year without either failure or need for maintenance. During this trouble-free period it is expected that:

- The beneficiaries will gain an appreciation of the improved water source.
- The handpump will become an important factor in their day-to-day existence.

To achieve this goal, those involved in providing handpumps for the rural water supply programs of the developing countries have found that the following concerns must be taken into account:

1. Ability to serve 200 to 500 people. A handpump for a developing country must be designed for the purpose of serving some 200 to 500 beneficiaries. The pump cannot be simply an adaptation of a western farmyard pump designed in the 19th century to serve five to ten beneficiaries.

2. Local manufacture. Wherever possible, the handpump unit must be manufactured in the developing country itself, in the region, or in another developing country. Production must, however, be under a rigid and independent quality-control inspection.

3. Lower production costs. In general, one can expect that production costs of a quality handpump in a developing country will be 50 percent to 60 percent lower than units of a similar standard produced either in Europe or in the United States.

4. Durable. The handpump selected must be designed for the time when the governmental maintenance system comes to a grinding halt. Logically, this situation will occur when the project has been completed, the agency concerned has left the area, the vehicles are ready for the scrap heap, and the trained crews, complete with tools and spares, have dispersed. At this point, the success or failure of a project will be determined. If the handpump selected has proved its worth over the long term and its design has resulted in low-cost maintenance, then the village will find a way to effect repairs.

Previous Page Blank

5. People benefit. During the project planning phase, it should be noted that in many cases villagers are reluctant to change their traditional water sources. They often look upon the installation of a handpump as yet another governmental interference in their lives. Thus, during the time frame of a project, efforts must be made to ensure that the intended users will appreciate and understand the benefits to be afforded. To ensure such a measure of credibility, the handpump must be durable.

6. Simple maintenance. Two of the most important elements to be considered in developing a handpump maintenance program are to:

   a. Simplify the maintenance of the below-ground equipment so that one semitrained mechanic can effect any repair with a minimum of skill and physical effort; and

   b. Make the above-ground equipment so that spare parts are readily available and repairs can be carried out by a semitrained mechanic working with and for the villages.

2.2 Criteria for Evaluating Handpumps

The foregoing observations have helped program managers to develop the following criteria in evaluating any potential handpump:

1. Ease of maintenance

   - What are the skills needed for maintaining the below-ground elements?
   - What are the skills needed for maintaining the above-ground elements?
   - What are the spare parts' requirements and availability?

2. Durability and efficiency

   - Can all parts last for at least one year of trouble-free operation?
   - Can key parts last for at least two to five years, with minor maintenance?

3. Life-cycle cost of the proposed unit

   - What is the availability of spare parts?
   - What is the cost of repair?
   - What human resources and skills are needed for repair? When?

4. Acceptability to users

   - Does it provide enough water in a reasonable time period?
   - Does it require a minimum of physical effort on the part of the user?

5. Local manufacture

- Are component parts readily available locally? (Ball bearings, chains, steel plate, and casing pipe)
- Can local manufacturers achieve necessary degrees of accuracy for quality parts?
- Are parts interchangeable?
- Will local manufacturers accept rigid quality-control measures?

Chapter 3

FIELD VISITS

3.1 General

During the WASH team's visit to the Dominican Republic, Messrs. McLeod and Donaldson were briefed by the Mission health officers (Dr. Oscar Rivera, Current Officer, and Dr. Lee Hougen, incoming officer) as well as by Mr. Manual Valdez of USAID/DR's Engineering Office.

Following the briefing session, the WASH consultants and Mr. Valdez spent a week and a half in the company of the SESPAS repair crew, visiting pump sites. Fifteen of the 16 pumps were inspected and eight were disassembled in the field. In addition, Messrs. McLeod and Valdez visited several of the machine shops that had been proposed by the Georgia Institute of Technology (James, 1984, p.66) and several suppliers of ball bearings and chains.

3.2 Summary of Field Visits

The field visits revealed that most of the handpumps had been installed in an area where the user loading was low (100 persons per pump) and the groundwater table relatively high (in only three areas was the water table greater than 30 feet). Only one pump, the one at Hania, had been installed in a high use, deep water table situation. While WASH felt that for the most part the field test was not sufficiently rigorous, it did reveal a series of areas in which the handpump being tested would need modification if it were to require little maintenance, be durable, and be manufactured locally.

The following areas were found to need upgrading:

1. Method of protecting the ball bearings that support the handle pivot assembly;
2. Handle pivot-bearing assembly;
3. Design of sanitary seal between the pump base and the platform;
4. Method of protecting base bolts and base from standing in water;
5. Modification of chain connector pins at the quadrant and the drop rod;
6. Upgrading of strength of chain;
7. Leather cups being used in the plunger;
8. Method of fastening the plunger assembly to the drop rod;
9. Standardization or maintenance of equipment.

Each of the foregoing areas are detailed in the paragraphs that follow.

Previous Page Blank

3.3 Findings

3.3.1 Protecting the Ball Bearings from Rainwater

The field visits showed that the existing system was unsatisfactory because water quickly found its way under the bearing cover plate. This situation resulted in bearing failures being the major reason for repair (see Illustrations 3 and 4).

In the model of the "third generation" that was built by the Georgia Institute of Technology, study team members included rubber gaskets under the cover plates to try to alleviate this problem. WASH, however, views such an approach as an unsatisfactory solution because such items tend to be lost during the years as repairs are made.

In addition, the bolts securing the covers often result in additional problems in that:

- They are often broken by the field crews that have to replace shafts and/or bearings.
- They require that the crews have additional tools.
- They provide an entry point to a critical element for anyone wishing to tamper with the pump.

Illustration 3. Example of bearing cover plate showing how water leaks into bearing. (Note: No gaskets are used under the cover plate. Also note that crews need additional tools to remove both the bolts and covers.)

Illustration 4. Example of failure of ball bearing due to water entering under the cover plate.

3.3.2 Examining the Handle Pivot-Bearing Assembly

The most critical element in the design of the "Steel" handpump is the relationship among the ball bearings, the main shaft, and the handle. In the model observed in the field, there is a snug fit of the shaft through the handle bushing and at the ball bearings (see Illustrations 5 and 6). Once water enters the bearings, the shaft begins to turn in the races, as well as in the handle bushing. When this turning occurs, the system becomes a steel-on-steel system instead of the ball bearing system it was designed to be. Because it is almost impossible to lubricate the friction points, excessive wear quickly sets in (see Illustration 7).

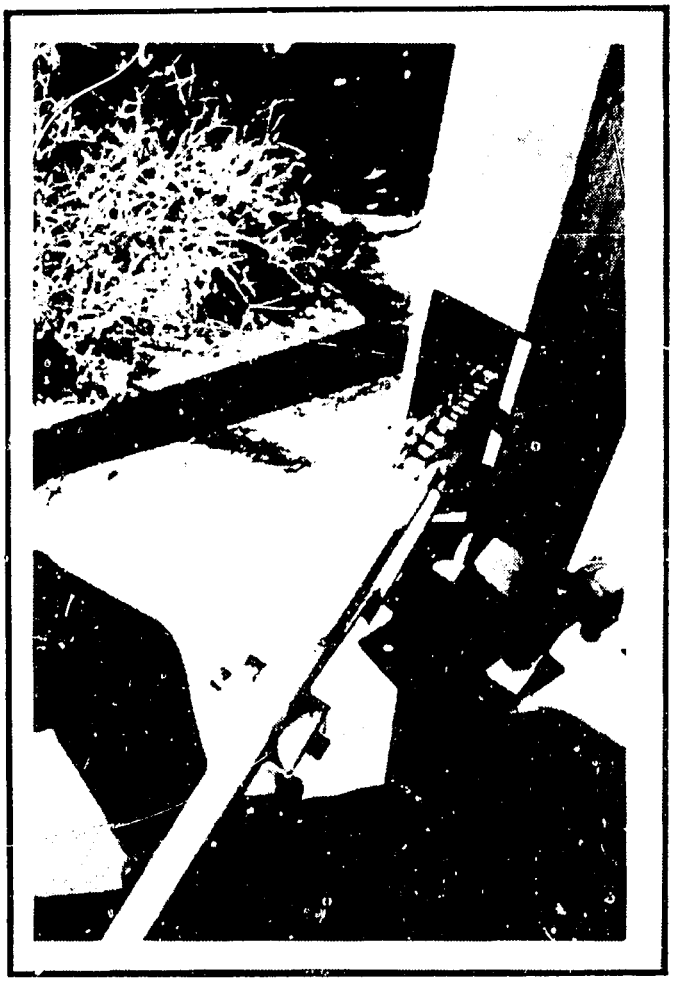

Illustration 5. The handle pivot assembly consists of a steel pin with a snug fit through two bushings on the handle. This fit is necessary to ensure that the pin may be removed to service the below-ground parts of the pump.

Illustration 6. Smooth operation of the handle pivot assembly depends on the movement of the ball bearings. Once water enters the bearings the shaft tends to turn in the inner rate and/or in the handle bushings, thereby causing excessive wear to the shaft.

Illustration 7. Note the wear on the end of the handle shaft, which resulted when the ball bearings froze and the pump continued in operation for six months.

3.3.3 Designing the Sanitary Seal Between the Handpump Base and Platform

All of the handpumps observed in the field revealed a common design problem that does not allow the base to make a positive, unbreakable sanitary seal. The current design depends on the bond between the base plate and the top of the platform. (The top of the well casing is level with the top of the platform.) Cracks in the grout used to level the base were observed to allow small amounts of water to enter the water. Over the years, this condition can be expected to get worse (see Illustrations 8 and 9).

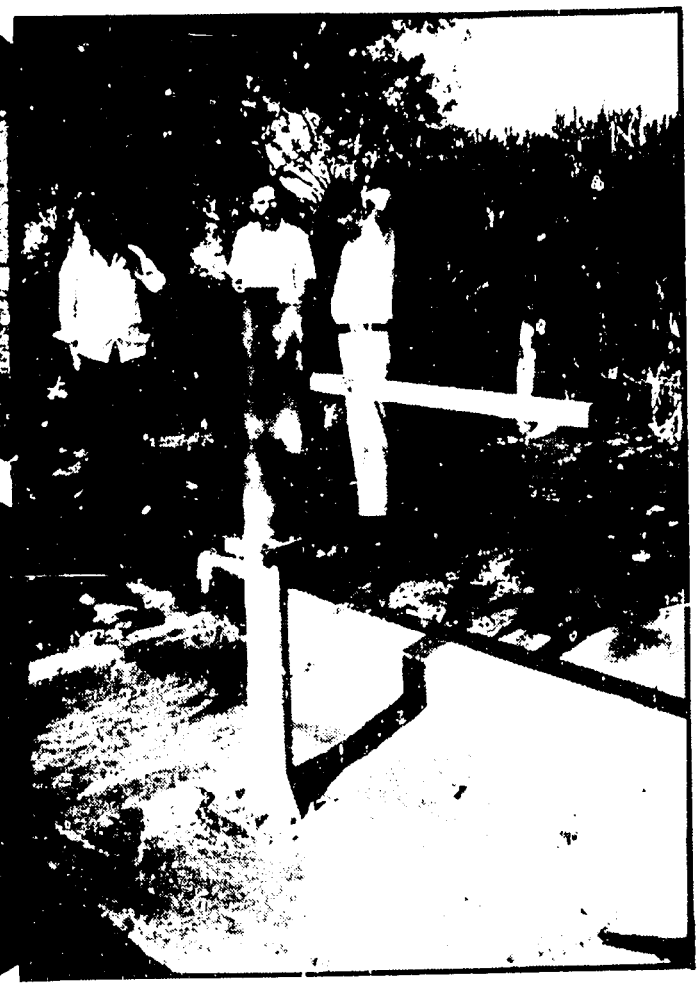

Illustration 8. Note grout used to level the platform to accommodate the flat plate of the base. Cracks in this grout allow water to enter the well as the casing is flush with the platform.

Illustration 9. Note that platform grouting will cause water to pond at pump base and raise the potential of infiltration into the well through cracks in the grout.

3.3.4 Protecting the Base Bolt From Standing in Water

A common problem cited was that the current design resulted in the base bolts being constantly exposed to water. This condition will result in the rusting of the bolts over the years. Further, unless the pump base is heavily galvanized at the wetted area (see Illustration 10), it will also rust.

Rusted bolts become a problem when the base must be removed to service below-ground elements such as plungers, check valves, and so forth. Once a rusted bolt snaps off, its replacement becomes a difficult and time-consuming task for a maintenance crew. It is not a task that villagers are able to perform.

Illustration 10. Note that the base bolts and pump base are in a constantly wet condition. This results in their rusting. In a few years bolt removal will be very difficult and will cause maintenance problems.

3.3.5 Modifying the Pin Connection at Quadrant and Drop Rod

A common failure was that the connecting pin at the quadrant and drop rod were too light. To correct this situation, the Dominican Republic had modified some of the units to use a chain connection link instead of a pin. The modification seems to be working well. Whereas, the original pins were continuing to fail, the problem was noted to be at its worst where the lift was greatest (see Illustration 11).

Illustration 11. Note the small diameter of the pin used to attach the chain to the handle. The current design must be modified at the quadrant and the drop rod connector to replace the pin with a chain link connector.

3.3.6 Upgrading the Strength of the Chain

After observing the 15 field sites, it was noted that there had been three failures that occasioned replacement of the design chain (see Illustration 12). On studying these failures, it was noted that a heavier chain was called for. This change was first made at the deep well at Hania (160 ft.). It was, however, beginning to show up in another deep well (40 to 50 feet) after 9 to 11 months of operation. A heavier chain was installed at Hania and is currently working well.

Illustration 12. Note the broken link at the modified drop rod connection. This modification allows the use of a chain link connector of the drop rod.

3.3.7 Upgrading the Quality of Leather Cups

Because below-ground maintenance will need to be carried out by a national/regional maintenance crew, assisted by the users, only parts with a long life (more than two years) should be used. This approach will reduce the magnitude of the maintenance scheme that will have to be mounted. In nearly all instances, the leather cups being used were in poor condition even though they had been in service for only a few months (see Illustration 13). Often, the pump continued to operate because of the back-up leather.

Illustration 13. Note the poor condition of the leather cups after 11 months of service.

3.3.8 Fastening the Plunger to the Drop Rod

The second most frequent problem encountered was that the plunger cage had come unscrewed from the drop rod. Although the reason for this could not be clearly determined, it appeared that the jam nut was not being tightened sufficiently (see Illustration 14).

3.3.9 Standardizing Equipment

Illustration 15 shows the diversity of tools that the field crews are currently using during pump repair visits. WASH feels that the numerous tools should be standardized to a few simple key ones. Such standardization would help to reduce the broken bolts and the tendency of field personnel to use pliers and lockgrips which tend to destroy bolts quickly.

Illustration 14. The second most frequent problem encountered was that the plunger cage became loose.

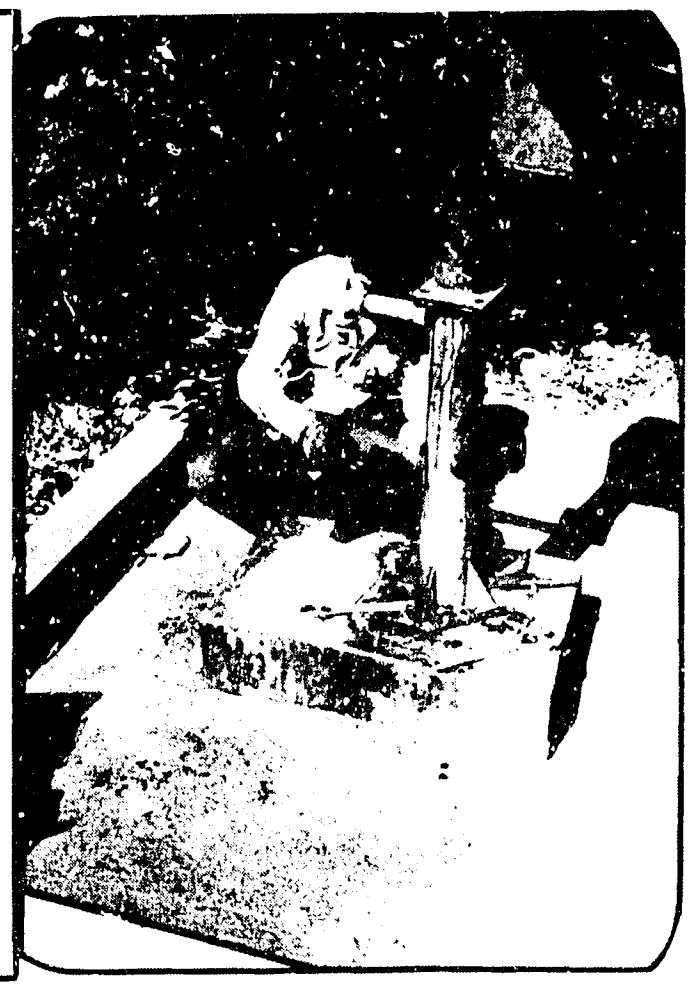

Illustration 15. Field maintenance crews have few tools. Thus, they tend to make extensive use of lockgrips and pliers. As a result, many bolts have been either chewed or stripped.

Chapter 4

OBSERVATIONS AND RECOMMENDATIONS

4.1 General Remarks

Results of field testing indicate that the design concept of the ball bearing steel handpump is both well balanced and feasible. The 11 months of operation in the field have clearly indicated three main areas that need to be modified, as follows: Handle pivot-bearing assembly; chain assembly; and base pedestal.

The following sections present the proposed modifications to the pump observed in the field. The report then examines some of the below-ground equipment and the needs for special maintenance tools. The concluding chapter outlines the course of action that WASH proposes be followed by USAID to develop a high-quality "Steel" handpump that can be manufactured locally.

4.2 Handle Pivot-Bearing Assembly

Observations:

The field visits showed that, without exception, slackness existed in the handle assembly between the axle pin and the inner races. Races had been replaced in three of the eight units disassembled and in the remainders one set of bearings had collapsed. The rust that was evident in many of the ball races was caused by water leaking past the cover plates. It was observed that in the present system the shaft is not locked to the bearings but rather depends on only a frictional fit.

Recommendation:

The existing handle pivot-bearing assembly should be dropped and replaced with the standard India MK II bearing locking system. The assembly is locked to one side of the plate through the inner race journals and uses two double-sealed ball races set in the handle. The complete handle assembly should generally conform to the India MK II standard design (see Figures 1, 2, and 3 - I.S. 9301 India MK II Production Drawings). To achieve this modification, dimensional changes will be necessary in the roller chain guide radius and adaptation of the handle to the existing side plates. Bearings SKF 6204-2RD are available in the Dominican Republic and are considered by the SKF as most suitable for the application. The modified head should allow the handle to reach its upper limit above the present horizontal position (similar to the India MK II). Thus, the pedestal height will have to be reduced, and there will be a slightly longer stroke in the cylinder.

Previous Page Blank

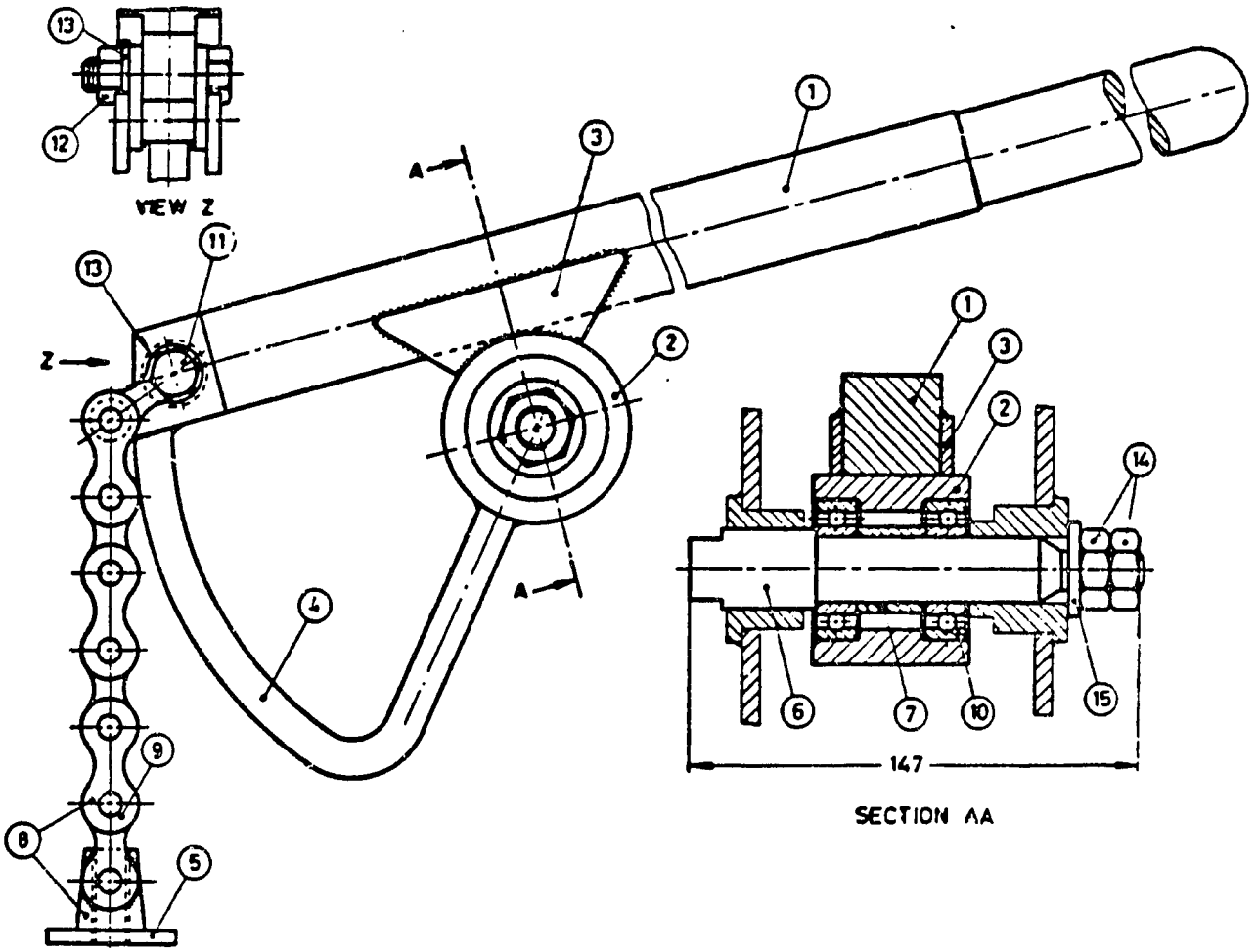

Part No.	No. Off	Description	Material
15	1	Washer (4 mm thick) — To suit M12	—
14	2	Hex nut — M12	—
13	1	Washer (2 mm thick) — To suit M10	Steel, Grade B (see IS : 2016-1967)
12	1	Hex nyloc nut — M10	—
11	1	Hex bolt M10 × 1·5 × 40 — IS : 1364-S-8·8	IS : 1364-1967
10	2	Bearing (shielded on one side)	IS : 6455-1972
9	1	Roller chain (25·4 mm pitch)	IS : 2403-1975
8	1	Chain with coupling	—
7	1	Spacer	IS : 226 St42-S
6	1	Handle axle	IS : 1570-1961—C35Mn75
5	1	Chain coupling	IS : 226 St42-S or class 2 of IS : 2004-1978
4	1	Roller chain guide	IS : 226 St42-S
3	2	Housing holder	IS : 226 St42-S
2	1	Bearing housing	IS : 226 St42-S
1	1	Handle bar	IS : 226 St42-S

Note — Welding fillet will not be less than 6 mm at all places excepting for bearing holder where it shall not be less than 4 mm.

All dimensions in millimetres.

Figure 1. Details of Handle Bearing System

Source: India MKII Production Drawings

Source: India MKII Production Drawings

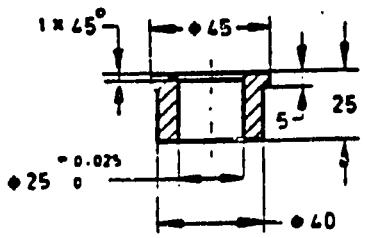

Manufacturing tolerance to be ± 0·1 unless otherwise specified.
4J Axle Bush (Right)

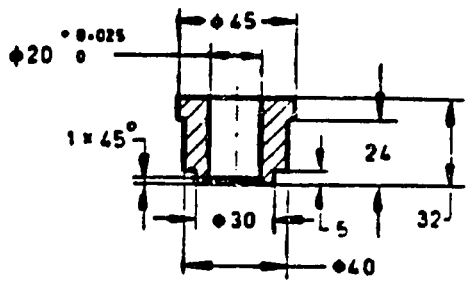

Manufacturing tolerance to be ± 0·1 unless otherwise specified.
4K Axle Bush (Left)

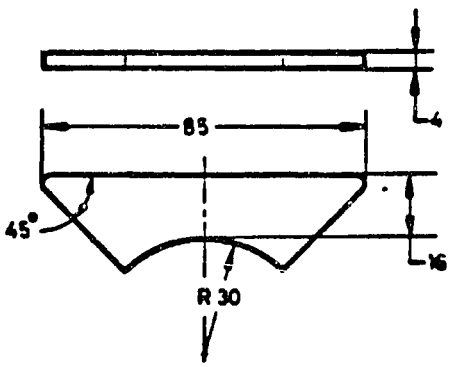

6F Housing Holder

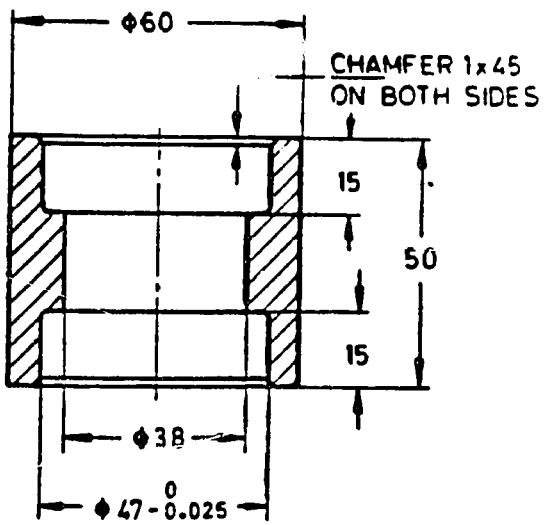

Manufacturing tolerance to be ± 0·1 unless otherwise specified.
6G Bearing Housing

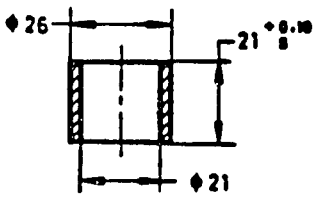

Manufacturing tolerance to be ± 0·1 unless otherwise specified.
6H Spacer

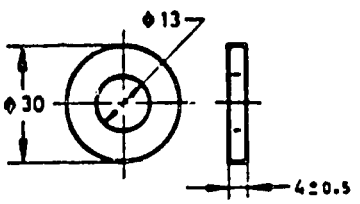

6J Plate Washer

All dimensions in millimetres.
HANDLE ASSEMBLY PARTS

Figure 2. Details of Minor Parts to be Used in Handle Bearing System

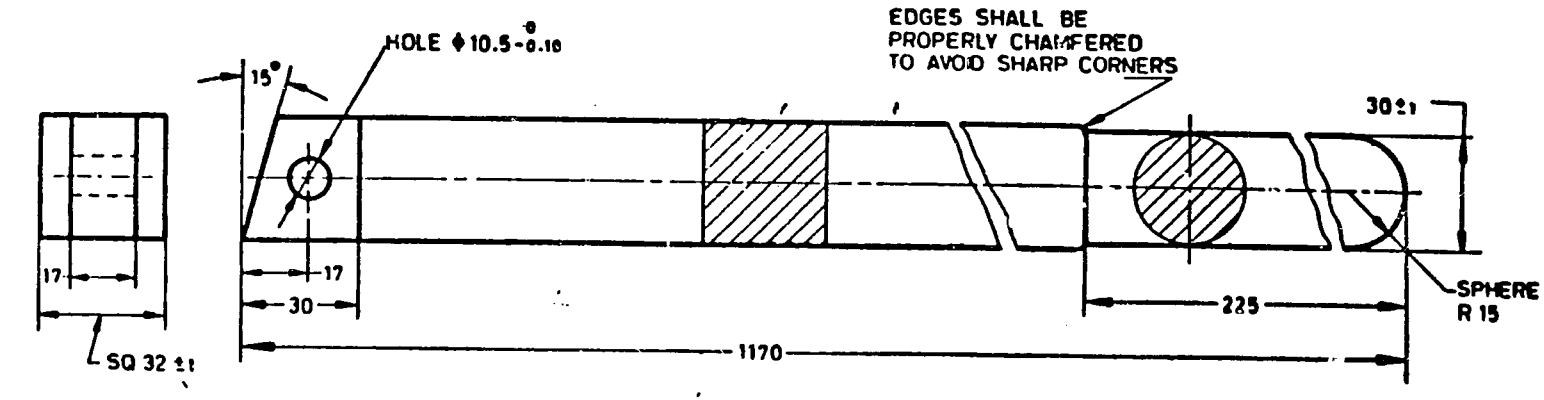

6A Handle Bar

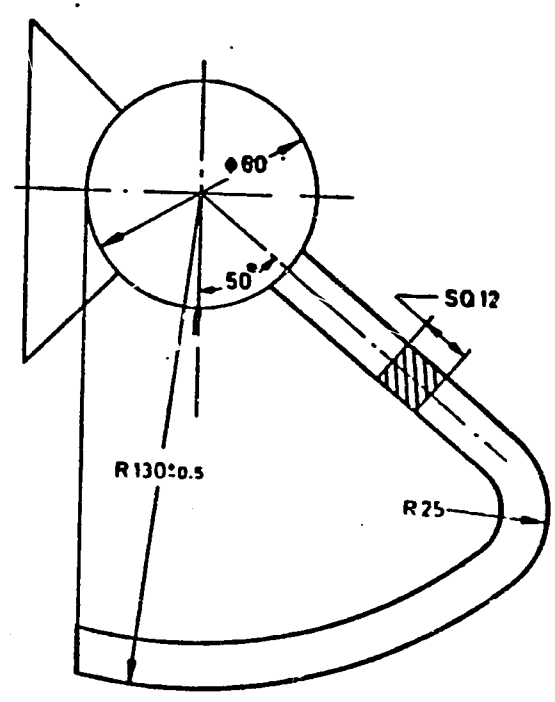

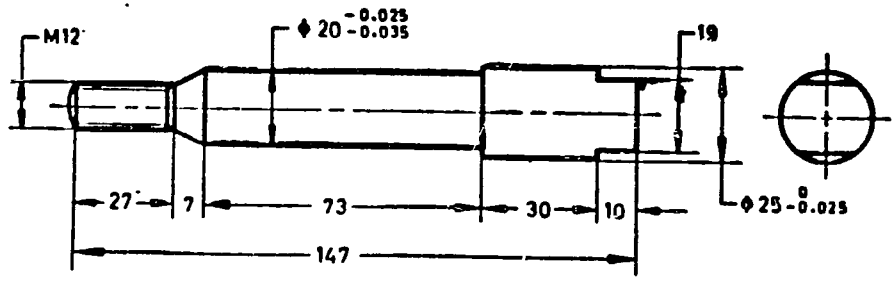

Manufacturing tolerance to be ± 0·1 unless otherwise specified.

6B Handle Axle

6C Roller Chain Guide

All dimensions in millimetres.

Figure 3. Handle Assembly Parts

Source: India MKII Production Drawings

4.3 Chain Assembly

Observations:

The roller chain selected by the Georgia Institute of Technology (motor cycle No. 428 or Industrial RC40) appears to be too light. In addition, the scheme to connect the chain to the quadrant has been modified to use standard chain connecting links. The light chain and the modified system seem reasonably satisfactory at shallow SWL depths (that is, 7 feet to 20 feet). At depths greater than 30 feet, however, it is expected that early failure could be common. The one pump set at 160 feet (Hania) required a heavier duty chain to be fitted after constant failure of the original.

Recommendations:

The design should be standardized on a 3/4-inch Pitch Industrial Chain H060. Once again, it may be advisable to follow a proven method as developed for the India MK II where the chain is anchored to the handle by a high tensile bolt and self-locking nut, having a diameter to fit the chain link hole without the bush. In this design, the chain is welded to the chain coupling versus using a bottom pin as in the pump currently being tested (see Item 6D of Figure 4). While this is not usual practice, it has given good results in the India MK IIs used in India. A self locking bolt may be considered if welding becomes too difficult. (The 3/4-inch industrial chain would use a 5/16-inch diameter bolt; see Figure 4). The 3/4-inch chain is readily available on the local market. The design should also be changed to allow the chain to run on its roller, rather than on the link, as is done currently.

4.4 Spragg Base to Mount Pump

Observations:

The pedestals were found to be firm in all cases and to be of a high-quality welded fabrication. In all cases, however, there was evidence of surface water leaking into the bore hole. This situation raises grave doubt that the present system would ensure hygienic conditions. Grouted bolts in a cement platform also present a problem over the long term. If the bolts are rusted or threads stripped, replacement is difficult as the concrete platform has to be broken out to allow replacement of a new bolt. If the present method is continued, wells will be open to pollution, and in many cases the pedestals will rust out within three or four years.

Recommendations:

To ensure a hygienic seal, the present base should be modified to have a separate mounting plate that fits over the casing pipe. This plate becomes part of the platform by being grouted into the concrete around the casing (see Figure 5). The unit must be completely galvanized, and overspecified in fabrication, as it will remain in place for the life of the installation (20 to 30 years). The pump pedestal is then mounted on this fixed plate by means of standard bolts, thereby allowing easy replacement.

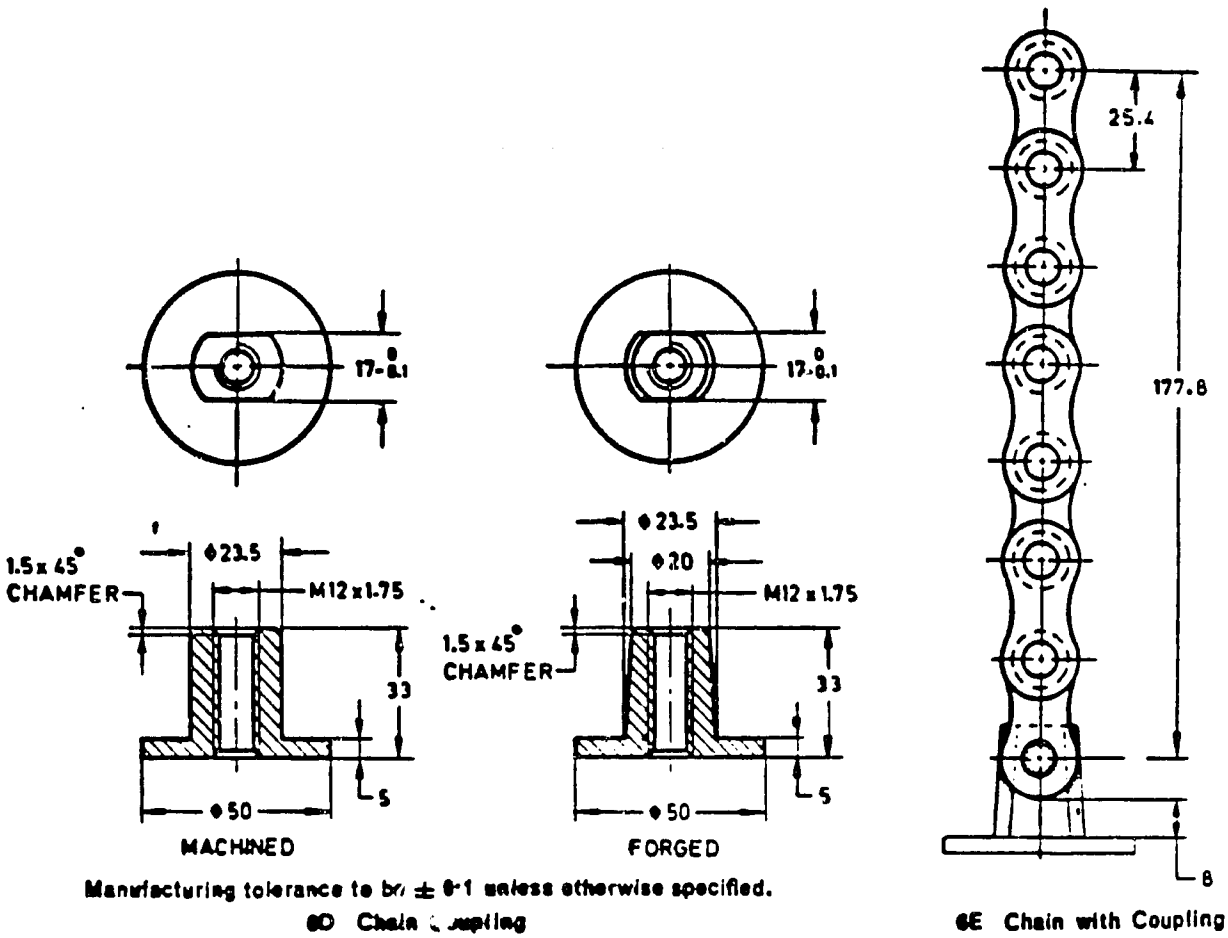

Figure 4. Details of Coupling Between Chain and Drop Rod

Source: India MKII Production Drawings

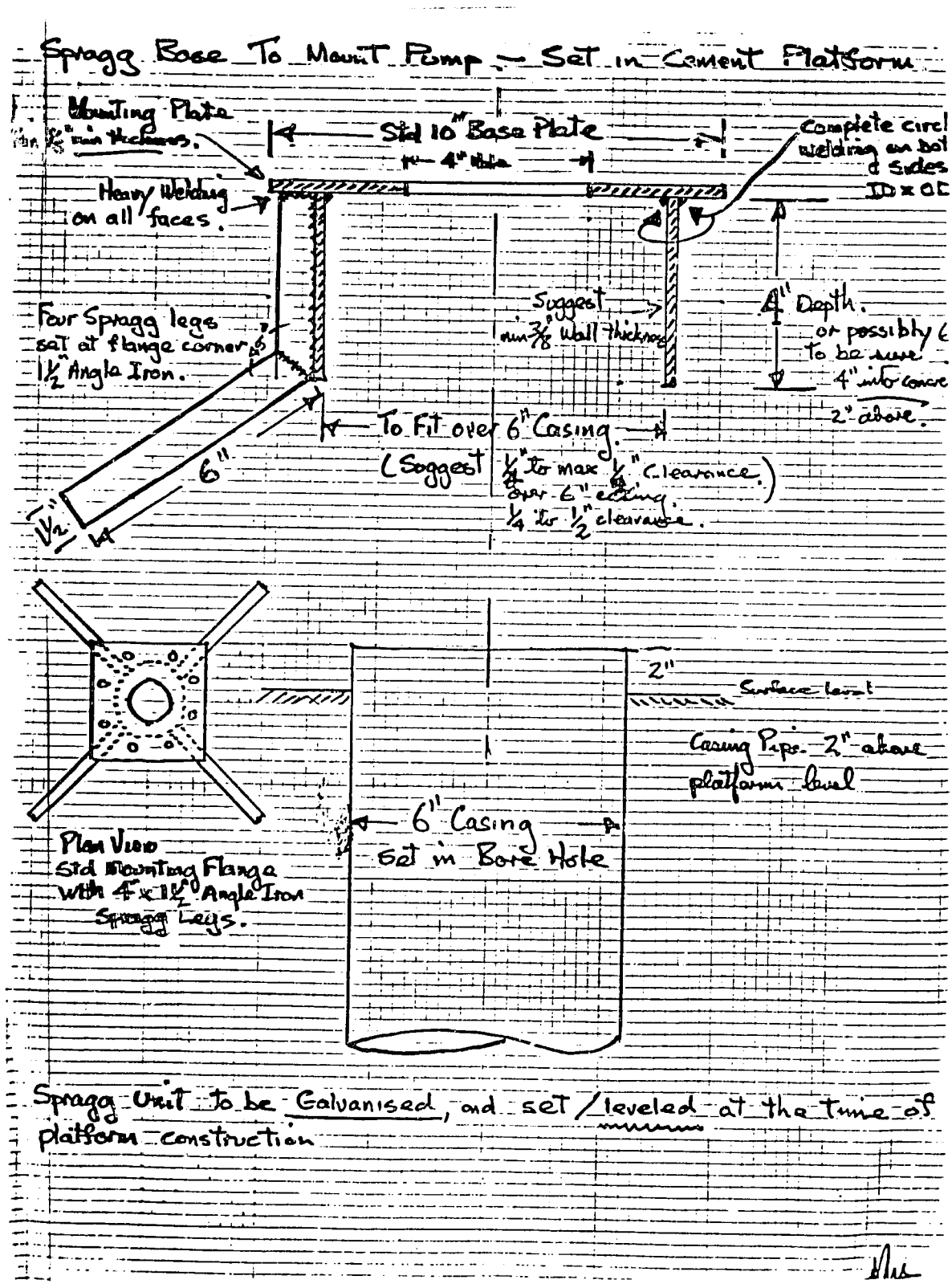

Figure 5. Spragg Base for Mounting Pump to Platform

Source: India MKII Production Drawings

Table 3

Results of Leather Buckets Evaluated by Lund University

Test	Type	Manufacturer	Million of strokes	Result
1	Leather, vegetable tannage	SWS, India	(5.8)	Some wear; testing continues
4		SWS, India	(6.0)	Some wear; testing continues
6		SWS, India	15.0	Upper seal worn out; lower still operating
10		Sydläder, Sweden	(17.4)	Partially worn; still operating
5		Sydläder, Sweden	(21.6)	Lower seal heavily worn at one spot; operating
8	Leather, chrome tannage	Richardsson & Cruddas, India	9.3	Lower seal worn out; both seals replaced
8		Richardsson & Cruddas, India	(6.0)	Some wear; testing continues
9		Sydläder, Sweden	(14.9)	Both seals worn; still operating
6	Leather, impregnated	MEERA, India	(12.4)	Some wear; testing continues
3		MEERA, India	(18.3)	Upper seal heavily worn; still operating

Source: Lund University Handpump Testing and Development Report, Sweden, 1984

A further modification suggested would be to lower the spout by two inches and to increase the internal diameter to allow a free flow, because rapid pumping seems to raise the water through the guide brush and into the working head.

4.5 Maintenance

Observation:

Field visits showed the need for several inspection parts to make servicing of the above-ground structure easy. The need for a simple standardized set of tools was evident from observing the tools -- or lack thereof -- of the maintenance crew.

Recommendation:

It is recommended that a front cover be provided to allow easy access to the chain, not only for greasing, but also for inspection and simple replacement. Standardized simple tools must be considered, similar to those used with the India MK II System, that is, crank-socket wrenches to tighten flange bolts, and the chain anchor bolt (see Appendix B, Installation).

4.6 Below-ground Equipment

Observation:

Generally, the below-ground components are good. The connecting rods should not present any problems over the long term. The locally procured foot valve (manufactured in Taiwan) is excellent and would appear to be quite suitable for the two-inch cylinder. The piston has been made to a high standard of casting and machining. As with so many projects, however, the leather bucket or seal is an outstanding problem. Without exception, every piston we extracted should have been fitted with replacement seals. Unfortunately the locally produced leather bucket is of low quality, and if fitted, it would be a constant source of failure.

Recommendation:

The immediate solution is to import a high-quality vegetable tanned bucket, manufactured to suit the cylinder diameter and the piston. Various leather buckets were recently tested at the Lund University (see Table 3) in Sweden, and the results suggested that the leather bucket supplied from Meera Engineering Hyderabad India could well be the answer. It is recommended that a sample of the cylinder and piston should be forwarded to Meera Engineering, and suitable leathers equal in quality to the 2 1/2-inch buckets supplied for the Lund test should be procured. An initial order for 1,000 would seem reasonable, followed by a further order for 2,000 if the item proved satisfactory in terms of operational life and cost. Upgrading of the leather industry in the Dominican Republic to improve the seal quality could be considered, but only as a long-term effort.

Chapter 5

FUTURE COURSES OF ACTION

5.1 Discussion of Alternative Courses of Action

After examining the findings of field testing and observations made during the visits to local manufacturers and suppliers, WASH held discussions with the Mission, S&T/H/WS, and LAC/ENGR. As a result of these discussions, the alternative courses of action shown in Table 4 were considered. The sections that follow discuss the more viable of these alternatives and then suggest a strategy for S&T/H/WS and the Mission to pursue.

Table 4

Alternative Courses of Action to be Considered by USAID/DR

1. Do nothing.
2. Terminate handpump element of Health Sector II Loan Project.
3. Use locally manufactured handpumps.
   a. Cast iron pumps (SW & DW).
   b. Prototype steel pump.
   c. Modified prototype steel pump.
   d. Other pump:
      1. Blair SW plastic pump
      2. India MK II pump
      3. Malawi pump
      4. Others.
4. Use imported pumps:
   a. MK II
   b. Dempster
   c. Moyno
   d. Others.
5. Use other pumping technologies.
6. Use other water sources:
   a. Springs with gravity lines
   b. Rainwater.

Previous Page Blank

5.2 Results of Field Test for the "Steel" Handpump

WASH's field survey found that the 16 units have required 58 repairs in a period of about 11 months, in spite of the fact that 10 of the test units were operated as shallow water pumps (that is, with lifts of 20 feet or less). Of those set at depths beyond 20 feet it was found that they required 26 of the 58 repairs made. In other words, only 33 percent of the handpumps were operated as deep well pumps and they required 45 percent of the repair actions. In reviewing the data (see Table 2) one also finds a direct correlation between the depth of the well and the number of repair actions (that is, more depth equals more repairs). In all cases, the user loading appeared to be quite light (+/- 200 users per handpump per day).

In contrast to the DR test, it was found that 230 India MK II handpumps had been installed in Haiti. Mr. Raymond Janssens, the UNICEF Engineer for Haiti, indicated that the first unit to be repaired had operated for 22 months at a depth (static water level) of 280 feet. He estimated that this pump was serving approximately 2,000 people per day. The required repair was that of replacing the ball bearings in the handle support system. He also indicated that the Government of Haiti had standardized on India MK II handpumps and was not allowing importation of other types. He went on to say that UNICEF's landed cost (India to Haiti) for an India MK II unit was US$320 complete with 100 feet of 1 1/4 inches galvanized pipe, connecting rods and a cylinder. He indicated that UNICEF expected Haiti to install 400 units over the next four years.

Although field tests were not as vigorous as they should have been, they were instrumental in establishing the following:

a. The overall design concept of the "Steel" handpump is valid.

b. In the above-ground elements there are three basic problems:

- Improvement of the handle support system
- Improvement of the chain connector system
- Improvement of the pump base mounting system.

c. In the below-ground element there is

- Insufficient evidence to be able to recommend use of plastic drop pipes
- Sufficient evidence to recommend the use of a three-foot long plastic cylinder made from a section of Schedule 80 PVS pipe that has been threaded at both ends
- Sufficient evidence to warrant the use of the imported brass foot valve
- A need to upgrade the leather cups being used

- Sufficient evidence to recommend the continued use of ten-foot sections of galvanized iron pipe

- A need to weight the drop rod when the static water level is less than 15 feet.

In summary, WASH feels that if the current "Steel" handpump design is upgraded as described in this report, produced under a supervised quality-control system and installed under adequate supervision in wells up to static water levels of less than 150 feet, the results should approach those of the India MK II. (General trouble-free operation for six months when user loadings are +/- 250 persons per handpump per day.

5.3 Recommended Actions by S&T/H/WS and USAID/DR

After examining all the alternatives shown in Table 4, WASH recommends that the following actions be taken:

- S&T/H/WS should continue the development of the "Steel" handpump as a replacement for the cast iron model.

- S&T/H/WS should build several prototypes and develop plans, specifications, jigs and fixtures, gage kits for a "Steel" handpump to be manufactured locally.

- USAID/DR should use the prototypes and documents to locally manufacture a limited number of examples following carefully supervised quality-control measures for manufacture.

- USAID/DR should install +/- 100 examples of the modified "Steel" handpump in one area. One-third of the pumps should be shallow well, one-third medium depth units, (20 to 100 feet) and one-third deep-well units (100 to 200 feet).

- USAID/DR and S&T/H/WS should carefully monitor the test results for the durability of the locally made handle support system.

- If the modified pumps on the deep wells give good results, then consideration should be given to producing the 750 units needed by USAID/DR to complete the Health Sector Loan II Project.

All of the foregoing recommendations are based on the assumption that all of the locally manufactured handpumps will be carefully made by one manufacturer, will use quality materials, and will be inspected by an independent quality control agency prior to acceptance by SESPAS and/or USAID. To ensure completion, USAID/DR should purchase the handpumps from at least two local manufacturers.

5.4 Recommended Actions by USAID/DR

If USAID/DR decides to proceed with the local manufacture of the modified "Steel" pump, it should immediately carry out the following actions:

a. Four prototypes of the modified "Steel" design should be manufactured and sent to the Dominican Republic along with their plans, specifications, jigs, and fixtures.

b. USAID/DR should work with S&T/H/WS to identify the quality-control measures that will be needed during manufacture and installation.

c. USAID/DR should make sure enough chain, plate, pipes, and bearings are available in the DR or can be made available within the next three to four months.

d. S&T/H/WS should help USAID/DR to identify an independent quality control agent to inspect pumps during manufacture and prior to acceptance by SESPAS.

e. USAID/DR should prequalify three to four firms that will be able to produce the entire pump (including galvanized base).

f. USAID/DR should hire a PSC to oversee bidding, manufacture, inspection and installation process.

g. USAID/DR should investigate possibility to obtain warranties for availability of spare parts for two years and functioning for one year.

5.5 Installation and Maintenance of the "Steel" Handpump

Installation must be effected either by a fully equipped and trained governmental team or by reputable subcontractors. Under no circumstances can a deep-well pump be installed by a semitrained health inspector assisted by the village. Even shallow well handpumps require skills beyond those normally available at the village level.

If the project is developed in this manner (the production of a durable pump, capable of long term trouble-free operation, correct installation), credibility will be established at the village level. If community members value an installation, and it has become part of their day-to-day existence, they will find maintenance support, either from governmental agencies or from the private sector. It is interesting to note that in India the private sector, with support of the villagers, is taking over the maintenance structure, thereby relieving the state governments of this responsibility.

5.6 Disposal of Existing Cast Iron Pumps

The AID cast iron pumps previously supplied to the program should be used for the shallow well application only. The units at present operating on deep well settings should be replaced by the modified "Steel" handpump. The above-ground structure of the units removed from the well should be reconditioned and then held in stock to be used for spare parts supply or for shallow depths to 20 feet.

In the future, consideration can be given to the Blair system for the shallow well application (see Appendix C for details). It is, however, too early to recommend its use without further field testing. Test results will be available towards mid-1985 and this system could be phased in to replace the AID cast iron suction (20 foot SWL) pump, if the field test results from Papua New Guinea are positive.

REFERENCES

1. James, B.E., G. Murdock, F. Pareja-Gil, and P.W. Potts. Prototype Development and Technical Assistance to the USAID/Dominican Republic Health Sector II Project; Georgia Institute of Technology, Atlanta, Georgia. April 1984.

2. Plans for local manufacture of the March 1984 version of the "Steel" handpump. Contact the WASH library for information.

3. Bidding documents prepared by USAID/DR for local manufacture of "Steel" handpump. Contact the WASH library for information.

Previous Page Blank

APPENDIX A

Reports on Field Repairs to
"Steel" Handpumps being Tested
by SESPAS

Previous Page Blank

República Dominicana

"Ayuda de Salud Pública y Asistencia Social"

Santo Domingo, D.N.
3 de diciembre 1984.

M. R. L.

Señor
Dr. José M. Herrera Cabral,
Coordinador General Acuerdo
Desarrollo Sector Salud II.
Proyecto AID No. 517-U-030.
S. D.-

Vía: Señor
Juan Ml. Arámboles,
Enc. de Almacén.

Distinguido doctor Herrera:

Muy atentamente me dirijo a usted, con la finalidad de comunicarle sobre la reparación efectuada a (2) dos bombas "PROTOTIPO" a las unidades de las Canteras y Las Bermejas respectivamente, que pertenecen al municipio de Guerra.

A continuación detalle:

PB LAS CANTERAS:

1- Una bomba prototipo; en ésta comunidad sólo hay una bomba perteneciente al Programa. Su reparación fue que tenía el chequeo de 1" dañado y el pasador Ping, por lo que ambos fueron cambiados. A ésta bomba se le anuló el pasador Ping y la cadena fue unida a la palanca por medio a un candado de la misma cadena.

Quiero especificarle que, a pesar que las zapatillas estaban un poco desgastadas, estas no fueron cambiadas.

Materiales usados:

Chequeo de bronce de 1-1/2".....1
Reducción busing de 1-1/2" a 1-1/4".....1
Niple galvanizado de 1-1/4".....1
Reducción copa de 2" a 1-1/4".....1

Luego de esta reparación, la bomba quedó funcionando bien y fue llevada a cabo el 29/11/84.

...../

Previous Page Blank

3/12/84

O

P14 LAS [illegible]: (Made by [illegible])

1 [illegible] bomba prototipo; es [illegible] la única bomba en [illegible] comunidad [illegible] perteneciente al Progr[illegible]. Su reparación fue [illegible]do a [illegible] el chequeros de 2" dañado, el pasador [illegible]to. Se [illegible] las zapatillas y el pasador [illegible] fue [illegible]tado, ya que la cadena fue unida a la palanca por medio a [illegible]ndado de la misma cadena; además se le cambió una caja de bolas y el pasador que une la palanca con las cajas de bolas por la razón de que éste estaba oxidado y fue sacado, por medio de golpes y calentamiento.

Luego de esta reparación la bomba quedó funcionando bien y se llevó a cabo el 30/11/84.

MATERIALES USADOS:

Chequeros de bronce de 1".....1
Niple galvanizado de 1".....1
Reducción copa de 2" a 1".....1
Caja de bolas.....
Pasador de 7/16" x 3".....1

Sin otro particular por el momento, le saluda.

Muy atentamente,

José Joaquín Paulino,
Ayudante de Brigadas,
Sector Salud II.

JJP/dp.-

Anexo: Formulario de reparación.

Best Available Document

República Dominicana

Secretaría de Estado de Salud Pública y Asistencia Social

Santo Domingo, D.N.
8 de noviembre 1984.-

No.044

Señor
Dr. José M. Herrera Cabral,
Coordinador General Acuerdo
Desarrollo Sector Salud II.
Préstamo AID No. 517-U-030.
SU DESPACHO.-

Vía: Señor
Juan Ml. A
Enc. de Alma

Distinguido Dr. Herrera:

Actualmente me dirijo a usted, con la finalidad de comunicarle sobre la reparación de una bomba PROTOTIPO, en la comunidad de Las Tablas -Baní.

Esta se encuentra al lado de la clínica Rural. Su problema era que, las zapatillas estaban descruidas, por lo que fueron cambiadas, pero el pistón no fue instalado en el tubo gris, sino en la tubería que usamos actualmente, ya que de esta forma no es necesario afinar las zapatillas.

Esta fue reparada y quedó funcionando bien

1- CARRETON:

Bomba PROTOTIPO: Frente al Sr. José Pérez. En esta bomba la reparación fue exterior, ya que sólo tenía una (1) caja de bolas rota.

Actualmente ésta bomba está funcionando bien. Además nunca se ha sacado, ya que sus reparaciones han sido exterior.

Sin otro particular por el momento, le saluda.

Muy atentamente,

José Joaquín Paulino,
Ayudante de Brigadas
Sector Salud II.

-8 NOV. 84
3:50 p.m.

JJP/d

República Dominicana

Secretaría de Estado de Salud Pública y Asistencia Social

Santo Domingo, D.N.
7 de noviembre 1984.

AA No. 911

Señor
Dr. José M. Herrera Cabral,
Coordinador General Acuerdo
Desarrollo Sector Salud II.
Préstamo AID No. 517-U-030.
S/ DESPACHO.-

Vía: Señor
Juan Ml. Arámbiles,
Encargado de Almacén.

Distinguido Dr. Herrera:

Cordialmente por medio de la presente me dirijo a usted, con la finalidad de comunicarle sobre la instalación de una (1) bomba prototipo, en la comunidad de Las Tablas, Municipio de Baní.

P3 Esta bomba fue instalada al lado de la clínica, donde anteriormente había instalada una bomba profunda del Programa, la cual fue sustituida por esta prototipo, instalada con los fines de hacer pruebas a la tubería P.V.C., unida por adaptadores macho y hembra, a las cuales se le anularon las campanas.

Quiero especificarle que ésta bomba, está unida a la "T" de acoplamientocon la palanca por medio a un candado de la misma cadena.

Actualmente este tipo de bomba lleva un tubo gris de 2" x 6', el cual tiene mayor espesor, que el que nosotros usamos, por la razón que para instalar el pistón fue negesario afinar las zapatillas, ya que no tenemos el tipo de zapatillas que este tipo de tubo lleva.

Esta bomba quedó funcionando bien y fue instalada el 1/11/84. En el formulario de la instalación detallo materiales usados.

Sin otro particular por el momento, le saluda.

Muy atentamente,

-8 NOV. 1984

..../

República Dominicana

Secretaría de Estado de Salud Pública y Asistencia Social

Santo Domingo, D.N.
29 de octubre 1984.-

AB-No.041-

Señor
Dr. José M. Herrera Cabral,
Coordinador General Acuerdo
Desarrollo Sector Salud II.
Préstamo AID No. 517-U-030.
SU DESPACHO.-

?

Vía: Señor
Juan Ml. Arámb...,
Enc. de Almacén.

Sra Martina Ant. Pequero

Distinguido Dr. Herrera:

Cortésmente por medio de la presente, me dirijo a usted, con la finalidad de comunicarle sobre la reparación efectuada a una bomba prototipo, en la comunidad de Las Tablas, Municipio de Baní.

En dicha reparación la bomba fue sacada completa, ya que tenía el pistón desarmado en el fondo de la tubería, como única reparación, este fue solucionado y la bomba quedó funcionando bien.

Quiero especificarle que, debido a que ésta bomba tiene un envarillaje fuerte, el pasador (Ping) estaba doblado, el cual fue enderezado e instalado de nuevo.

Hago esta observación, ya que a ésta bomba en cualquier momento, puede rompérsele dicho pasador.

Sin otro particular por el momento, le saluda.

Muy atentamente,

José Joaquín Paulino,
Ayudante de Brigada,
Programa Sector Salud II.

JJP/dp.-

ANEXO: Formulario de Reparación de Bombas.

31 OCT. 1984
8:20 AM

Santo Domingo, D.N.
24 de octubre 1984.-

AB-No.039

Señor
Dr. José M. Herrera Cabral,
Coordinador General Acuerdo
Desarrollo Sector Salud II.
Préstamo AID -No.517-U-030.
SU DESPACHO.-

Vía: Señor
Juan M. Arámboles,
Enc. de Almacén.

Distinguido Dr. Herrera:

Muy cortésmente por medio de la presente me dirijo a usted, con la finalidad de comunicarle, sobre el recorrido efectuado por quien suscribe a las comunidades de: Hoina, Carretón y Las Tablas, con motivo de informarle la situación en que se encuentran estas bombas.

A continuación detallo bombas dañadas y su ubicación:

LAS TABLAS:

1- Bomba prototipo, frente a la Sra. Martina Ant. Peguero. Esta bomba hace (1) una semana, que se dañó y según pude constatar esta safada del pistón, por lo que es necesario sacarla completa. Quiero especificarle que a esta comunidad solo la bomba que se encuentra en la Clínica Rural, está funcionando bien, a pesar que hay que cambiarle unos casquillos.

P8

CARRETON:

2- Bomba prototipo, frente al Sr. José Pérez, esta bomba a pesar que está funcionando, tiene una caja de bola rota; por lo tanto es necesario cambiarle dicha caja de bola.

Además en esta comunidad hay (2) dos bombas dañadas, una frente a la señora Estervina de los Santos y otra frente a Milagros Amador.

P11

P6

....1

25 OCT.

Santo Domingo, D.N.
10 de octubre 1984

AB-No.038

Señor
Dr. José M. Herrera Cabral,
Coordinador General Acuerdo
Desarrollo Sector Salud II.
Préstamo AID No. 517-U-030.
SU DESPACHO.-

Vía: Señor
Juan Ml. Arámboles,
Enc. de Almacén.

Distinguido Dr. Herrera:

Cortésmente por medio de la presente me dirijo a usted, con la finalidad de comunicarle, sobre la reparación efectuada a (1) una bomba prototipo, en la comunidaddde Carretón Abajo. Esta reparación se llevó a efecto el día 21/9/84.-

Su reparación sólo fue exterior, debido a que ésta solo rompió un pasador, el cual fue cambiado, como única reparación.

Sin otro particular por el momento, le saluda.

Muy atentamente,

José Joaquín Paulino,
Ayudante de Brigadas,
Sector Salud II.

JJP/dp.-

Anexo: Formulario de reparación.

15 OCT. 1984

República Dominicana

Secretaría de Estado de Salud Pública y Asistencia Social

Santo Domingo, D.N.
26 de septiembre 1984.-

AB-No.036

Señor
Dr. José M. Herrera Cabral,
Coordinador General Acuerdo
Desarrollo Sector Salud II.
Préstamo AID No. 517-U-030.
SU DESPACHO.-

Vía: Señor
Juan Ml. Arámbules,
Enc. de Almacén.

Distinguido Dr. Herrera:

Muy cortésmente por medio de la presente me dirijo a usted, con la finalidad de comunicarle, sobre la reparación de la bomba prototipo, situada en Haina.

Quiero recordarle que la reparación de ésta bomba sólo fue exterior, ya que su problema era que tenía los pasadores que unen las cajas de bolas y la "T" de acoplamiento con la cadena rota.

Estas piezas mencionadas anteriormente, fueron cambiadas, además de la cadena y la "T" de acoplamiento.

Deseo manifestarle que a esta bomba se le anularon los pasadores (Ping); ya que la cadena va unida a la "T" por medio a un candado de la misma cadena.

Debido a que ésta bomba tiene un envarillaje muy fuerte, tanto la cadena, como las cajas de bolas se le pusieron más fuerte.-

Actualmente ésta bomba se encuentra funcionado en perfectas condiciones.

Muy atentamente,

José Joaquín Paulino,
Ayudante de Brigadas,
Sector Salud II.

JJP/dp.-

República Dominicana

Secretaría de Estado de Salud Pública y Asistencia Social

Santo Domingo, D.N.
6 de septiembre 1984.-

AG-No.035

Señor
Dr. José M. Herrera Cabral,
Coordinador General Acuerdo
Desarrollo Sector Salud II.
Préstamo AID Nº. 517-U-030.
SU DESPACHO.-

Vía: Señor
Juan Ml. Arámbules,
Enc. de Almacén.

Distinguido Dr. Herrera:

Cortésmente por medio de la presente me dirijo a usted, con la finalidad de comunicarle sobre el viaje realizado hacia la comunidad de Carretón con el objetivo de reparar bombas.

A continuación detallo las bombas reparadas:

1- Bomba prototipo: Frente a la Sra. Alejandrina González. Esta bomba su problema era que, tenía el pistón desarmado en el fondo de la tubería, por lo que fue necesario sacar la tubería completa. Además tenía el chequers dañado y las zapatillas del pistón, por lo que fueron cambiadas estas piezas..

1- Bomba en Los Mayales: Frente a la Sra. Josefina Pérez. Esta bomba es P.V.C. y tenía la tubería safada de la bomba, pero pudimos rescatarla e instalarla de nuevo. Ademas tenía el chequers dañado, por lo que fue cambiado.

Sin otro particular por el momento, le saluda.

Atentamente,

José Joaquín Paulino,
Ayudante de Brigadas,
Sector Salud II.

Recibido 2:30 pm 7-9-84

JJP/dp.-

Anexo: Formularios de reparación.

República Dominicana

Secretaría de Estado de Salud Pública y Asistencia Social

Santo Domingo, D.N.
24 de julio 1984.-

AB-No.027

Señor
Dr. José M. Herrera Cabral,
Coordinador General Acuerdo
Desarrollo Sector Salud IIñ
Préstamo AID No. 517-U-030.
SU DESPACHO.-

?

Vía: Señor
Juan Ml. Arámboles,
Encargado de Almacén.

Distinguido Dr. Herrera:

Muy cortésmente me dirijo a usted, con la finalidad de comunicarle sobre algunas reparaciones de bombas prototipo y la supervisión de las tapas guías fabricadas por el Sr. Cedeño y las demás bombas prototipo, en las comunidades que señalaré a continuación.

Bombas prototipo reparadas:

1- Haina: Al lado del colmado. Esta bomba tenía la cadena rota, por esta razón fué cambiada, como única reparación.

1- Carretón: Frente a la Sra. Alejandrina González. Esta bomba tenía la base donde van colocadas las cajas de bolas desgastadas, por lo que fue cambiada la parte superior de la bomba, como única reparación.

1- Las Tablas: Esta bomba sólo tenía roto el pasador que une la palanca con la cadena, como única reparación.

Quiero manifestarle que, revisé las demás bombas prototipo y todas están funcionando bien.

A continuación detallo las condiciones en que se encuentran las tapas guías, fabricadas por Cedeño Industrial.

1- Carretón: Frente al señor Luis Santos. Esta tapa guía perdió un (1) bloque resbalante y un (1) casquillo; por la razón de

..../

25 JUL. 1984

República Dominicana

Secretaría de Estado de Salud Pública y Asistencia Social

Santo Domingo, D. N.
25 de junio 1984.-

AB-No.023

Señor
Dr. José M. Herrera Cabral,
Coordinador General Acuerdo
Desarrollo Sector Salud II.
Préstamo AID No. 517-U-030.
SU DESPACHO.-

Vía: Señor
Juan Ml. Arámboles,
Enc. de Almacén.

Distinguido Dr. Herrera:

Muy cortésmente me dirijo a usted, con la finalidad de comunicarle sobre la reparación de tres (3) bombas prototipo en la comunidad de Carretón y una (1) bomba también prototipo en Haina. Estas bombas fueron reparadas el viernes y sábado pasado del mes en curso.

A continuación detallo la ubicación y los materiales usados en dichas reparaciones:

1-(una) En Carretón: Al lado de la señora EULOGIA GONZALEZ, esta bomba tenía el pistón desarmado en el fondo de la tubería, la cual hubo que sacarla completa y a ésta sólo se le cambiaron las zapatillas del pistón, ya que todo lo demás estaba bien.

1-(una) En Carretón: Frente al señor JULIO ANT. MELO, ésta bomba también tenía el pistón desarmado en el fondo, como único problema, por lo que hubo que sacarla completa. A ésta no se le cambió nada.

1-(una) En Carretón: Frente a la señora ALEJANDRINA GONZALEZ, ésta bomba tenía las cajas de bolas y el círculo de la palanca desgastada, por esa razón se le cambiaron los siguientes componentes:

Cajas de bolas.....2
Palancas.....1
Pasador que une las cajas de bolas con la palanca.....1

28 JUN 1984

"T" de Acoplamiento con su cadena.....1

Quiero manifestarle que, en la palanca que fué colocada ésta bomba, va unidad a la "T" de acoplamiento por medio a un candado de la misma cadena.

Además le comunico que, la base donde van colocadas las cajas de bolas están desgastadas por lo que hace que éstas se dañen con más rapidez.

1 (una) En Haina: Al lado del colmado, ésta bomba sólo tenía las cajas ~~de bolas~~ rotas por lo que fueron cambiadas, como única reparación.

En otro orden le comunico que, el señor MARINO HERNANDEZ, nos ha entregado los siguientes materiales:

"T" DE ACOPLAMIENTO DE 1/2" 21
"T" DE ACOPLAMIENTO DE 7/16" 22
total..... 43
=====

Todas éstas "T" de acoplamiento en perfectas condiciones.

Cangrejo de 2" 20
de los cuales (8) ocho de ellos fueron recibidos y los restantes (12) doce rechazados, ya que estos tienen roscas de 7/16" y sabemos que los pistones de 2" llevan roscas de 1/2".

Sin otro particular por el momento, le saluda.

Muy atentamente,

José Joaquín Paulino,
Ayudante de Brigada,
Programa Sector Salud II.

JJP/dp.-

República Dominicana

Secretaría de Estado de Salud Pública y Asistencia Social

Santo Domingo, D. N.
31 de mayo 1984.-

AB-[illegible]

Señor
Dr. José M. Herrera Cabral,
Coordinador General Acuerdo
Desarrollo Sector Salud II.
Préstamo AID No. 517-U-030.
SU DESPACHO.-

Distinguido Dr. Herrera:

Muy cortésmente me dirijo a usted con la [illegible]idad de comunicarle sobre la reparación de (3) tres bombas prototipo.

A continuación detallo los lugares y los materiales que se usaron en dicha reparación:

1- [illegible] Pinos: Frente a la señora Alejandrina González. Esta [illegible] tenía (2) dos cajas de bolas rotas y el pasador que une a éstas.

2- La Cualey: Frente a Milagros Mejía. Esta bomba fue sacada completa, ya que el pistón estaba desarmado en el fondo de la tubería, además, tenía (2) dos cajas de bolas rotas y el pasador que une a éstas, desgastado, también (2) dos pines rotos. Observación: El Ingeniero Valdez le exhorta que sea reparada la plataforma de esta bomba, ya que se encuentra en mal estado.

3- La Maina: Al lado del palmado. Esta bomba fue sacada y reparada, ya que tenía el pistón desarmado en el fondo de la tubería, como único problema.

Después de esta reparación, esta bomba rompió la palanca, la cual quien suscribe, el Ingeniero Valdez y Antonio Felix, cambiamos.

Actualmente éstas bombas están funcionando perfectamente.

Sin otro particular por el momento, le saluda.

Muy atentamente,

José Duquela Paulino,
Ayudante de Brigada,
Sector Salud II.

República Dominicana

Secretaría de Estado de Salud Pública y Asistencia Social

Santo Domingo, D. N.
23 de abril 1984.-

AB-No. 011

Señor
Dr. José M. Herrera Cabral,
Coordinador General Acuerdo
Desarrollo Sector Salud II.
Préstamo AIV No. 517-U-030
Su DESPACHO.-

Distinguido Dr. Herrera:

Muy atentamente me dirijo a usted con la finalidad de comunicarle sobre el viaje realizado por quien suscribe, en fecha viernes 18/4/84; hacia las comunidades de: Carretón, Sabana Larga, Los Mayales, Tibicí, Los Roches y Gualey, para informarle las condiciones en que se encuentran las bombas instaladas en dichas comunidades:

BOMBAS PROTOTIPO.

CARRETÓN:

P3 1 Frente a la clínica .....Buena
P1 1 " " Eulogio González..... "
P11 1 " " Epifania Santos..... "
P2 1 " " José Pérez..... "
P12 1 " " Julio Ant. Melo..... "

LOS MAYALES:

P7 1 Frente a la Sra. Olga Polanco..... Buena

GUALEY:

P6 1 Frente a Milagros Mejía..... Dañada

Esta bomba hace aproximadamente (1) semana, que está dañada e indica que está safada del pistón, por lo que es necesario usar el [illegible] de, para su reparación.

..../

LOS PINOS:

1 Frente Alejandrina Gonzáles.

Esta bomba a pesar que está funcionando tiene una (1) caja de bolas rota, por lo que hace que su palanqueo sea fuerte.

1 Frente a Tomás Carmona.....Buena
1 " " Mery Carmona..... "

[illegible]

1 Al lado del colmado.

Esta bomba, a pesar que está buena tiene la plataforma cuarteada, debido a su peso, ya que a medida que ésta es palanqueada mueve toda la base de la plataforma, por lo que es necesario que ésta sea reparada, ya que de lo contrario, puede hasta hundirse.

A continuación detallo las condiciones en que se encuentran las TAPAS GRIAS, fabricadas por: CEDENO INDUSTRIAL, S.A. y las bombas instaladas en dichas comunidades:

TAPAS GRIAS.

Carrizal:

1 Frente a Rafael Saldaña .....Buena
1 " " Luis Santos..... "
1 " " Yolanda Falcón..... "
1 " " Esteban Rosario..... "
(Esta bomba descarga la tubería).
1 Frente a Rafael Rosario..... ".

Sabana Larga:

1 Frente a José Alt. Arias.....Buena

Cuaba:

1 Frente a José Joaquín Arias..... "
1 " " Erminia Pérez ..... "

Location	STATIC WATER LEVEL	TOTAL DEPTH	PIPE & ROD INSTALLED	MANUFACTURER	DATE OF INSTALLATION	FLOW RATE (GPM)[1] AS OF DATE INSTALLED	FLOW RATE (GPM)[1] AS OF 1/31	ADITIONAL INFO.
EULOGIA GONZALES ✓	20'	59'	50'	CEDEÑO	1/23/84	5	5 ok	BASE GROUTED [redacted]
JULIO ANTONIO MELO ✓	11½'	49'	40'	CEDEÑO	1/24	5	3½ ok	
CUNICA DE CARRETON ✓	12½'	30½'	20'	CEDEÑO	1/24		3¾ ok	VERY SHALLOW WELL. WORKS OK AFTER ADDING 1 WEIGHT.
MANUEL CARMONA ✓	14½'	60'	50'	SENRA	1/25		3½ ok	
TOMAS CARMONA ✓	29½'	61'	50'	SENRA	1/25		3 ok	
MILAGROS MEJIA-GIALL	51'	72'	60'	CEDEÑO ✓	1/28	5	4 **	change se absorbo
GLORIA POLANCO * ✓	7'	47'	40'	CEDEÑO	1/28	5	5 ok	PUMPED MUDDY WATER ALL 1/28 BU BY 1/29 WATER CLEARED. TWO WEIGHTS WERE ADDED.
JOSE PEREZ •	12'	24½'	15'	CEDEÑO	1/29		4	
ALEJANDRINA GONZALES ✓	39'	62'	55'	MARINO	1/29		4 ok	
MARTA MARTINEZ ✓	11½'	34½'	25'	AID MODIFIED	1/30		3¼ ok	
EPIFANIA DE LOS SANTOS •	28'	60	50'	CEDEÑO	1/30	5⅓	4	
FLORA CARMONA ✓	8'	46'	30'	AID MODIFIED	1/31		3½ ok	

NOTES 1. GPM AT 40 STROKES/MIN, FULL STROKE.

2. MANUFACTURER COLOR
CEDEÑO : GRAY
SENRA : ORANGE
MARINO : GREEN

3. THE MARINO PUMP AT ALEJANDRINA GONZALES (#9) AND THE CEDEÑO PUMP AT EPIFANIA DE LOS SANTOS (# 11) HAVE SEALED BEARINGS (NACHI 6001 NSL). ALL THE OTHER CEDEÑO AND THE SENRA PUMPS HAVA SHIELDED BEARINGS (NACHI 60012) AS OF JAN 31.

DEFECTUOSA EL POZO SE AGOTA

567-1241

April 2, 1984

Manuel Valdés, CRD/ENG

Repairing of Georgia Tech's Steel Pumps at Haina and Las Tablas

Dr. Oscar Rivera, HAN

1. On March 27 and 28, the steel pumps located at Haina and Las Tablas were repaired. ~~A personnel of~~ 3 persons from SESPAS under the supervision of Ing. Valdés were appointed for the task.

2. Haina: The pump at Haina was disassembled according to the prescribe procedures. Primary, the problem was estimated as broken center rod at a deep level or worn out leather cups, by the fact that the handle could be moved with relatively minor effort. When the entire steel rod was pulled out it showed the cylinder plunger completely disassembled. Upon examination, no sign of damaged threads were evident in the cap of the plunger (see photo). Then the 2 inches pipeline was raised and found the rest of the plunger and the leather cups inside the PVC cylinder. The threads of the inside tubing of the plunger also showed no sign of damage and the leather cups also showed no noticeable evidence of unsual wear. We understand this happened because the leather cups shrinked a little bit, with the condition of leather cups not fully tightned made possible the disengagement of the central tubing of the plunger. We want to bring to your attention the fact that after more than 15 days without operating the pump, only 20 feet of the 2" drop pipe was empty.

At reassembling the cylinder, one new bottom check valve was installed and only one of the existing leather cups were changed. The existing PVC cylinder was maintained because it showed no sign of unusual uear.

No trouble was found in reassembling the entire pump. The complete operation was made in about 6 working hours. Water delivery of the pump measured in about 3.0 gls./minute after completion and operation.

The chain and pins were in good and workable conditions. Attached photos show the parts and phases of operation.

3. Las Tablas: This pump had been without operation during the last week. The problem was the breakage of the upper pin of the chain (see photo). The pin first bended and later broke in one of the outside points of the chain. Villagers told us that the pump had been subject to a tremendous effort because it was the only pump working in the village for the last 2 weeks before breakage.

The pump was repaired in less than 30 minutes and started operation immediately because water was up to the outside nipple level. When raising the center rod for repairing, water was flowing through that nipple, it demonstrating no leaks neither at the drop pipe nor the bottom check valve.

cc: Dr. M. Herrera, SESPAS
D. DeWitt, CRD
Ing. George Murdock, GIT
Engineering Experiment Station
Georgia Institute of Technology
Atlanta, Georgia 30332

Drafted by: CRD:MValdés:msr

Clearance:
CRDO:LArmstrong

Georgia Institute of Technology
ENGINEERING EXPERIMENT STATION
Atlanta, Georgia 30332

March 23, 1984

Ing. Manuel Valdez
U.S. Embassy
USAID
Office of Health and Nutrition
APO Miami 34041

Estimado Ing. Valdez:

Esta carta es para reconfirmar la conversacion telefonica que tuve con usted el 22 de Marzo (1984) concerniente a la bomba prototipo Georgia Tech instalada en Haina. En la conversacion nosotros nos referimos al procedimiento para desmontar la bomba que es como sigue:

✓ 1. Retirar la palanca
✓ 2. Retirar el cabezal de la bomba
✓ 3. Retirar la placa prensaesto pas
✓ 4. Retirar la varilla de bajada
*Si la varilla esta atascada en la tuberia de bajada, gire la varilla en sentido horario jalando hacia arriba simultaneamente.
*Si este procedimiento no da resultado, use el tripode para remover la varilla.
5. Retirar en cuerpo de la bomba (si fuera necesario).
6. Retirar la tuberia de bajada (si puera necesario).

En nuestra conversacion usted me informo que usted tomara apuntes sobre todo el proceso de reparacion de esta bomba y que tendra una relacion detallada de la razon de la falla de la bomba.

Le estoy de antemano muy agradecido por su variosa ayuda en esta actividad. La informacion que usted nos proporcione es muy importante y sera analizada con el mayor cuidado por nuestro personal. Esperando tener pronto la oportunidad de saludario personalmente quedo de usted,

Ing. George Murdoch
George Murdoch

GM/lbn

cc: Dr. O. Rivera
Dr. M. Herrera
Ing. B. James

GEORGIA TECH IS A UNIT OF THE UNIVERSITY SYSTEM OF GEORGIA
AND AN EQUAL EMPLOYMENT/EDUCATION OPPORTUNITY INSTITUTION

Manolo.

Georgia Institute of Technology
ENGINEERING EXPERIMENT STATION
Atlanta, Georgia 30332

June 20, 1984

Dr. Oscar Rivera
U.S. Embassy
U.S. AID
Office of Health and Nutrition
APO Miami, FL 34041

Dear Oscar,

I have just received the steel handpump repair report from Manolo Valdez, and evidently the steel pump concepts seem to be working. The failures mentioned by Manolo seem to have stemmed from design or installation faults that are easily corrected. In fact, we have just finished fabricating a steel handpump of the "third generation design" in our machine shop. This handpump is destined for use in Upper Volta and incorporates all of the modifications suggested by the pump failures in the Dominican Republic. It is unfortunate that we at Georgia Tech have been unable to continue our activities with these handpumps in the Dominican Republic. However, we are still hoping that this project will be continued in the near future.

I would like to suggest the following plan of action for the continuation of the efforts to introduce steel handpumps into the Dominican Republic program.

1. Conduct a "user survey" on the 14 test well sites in order to get information on the number of beneficiaries per well.

2. Remove and inspect the 14 GIT steel handpumps presently installed in the Dominican Republic.

3. Use the data gathered during the inspection process to identify design weaknesses. Conduct a major design review taking into consideration design changes already made subsequent to the fabrication of the first 14 pumps.

4. Finalize the GIT handpump design and assist AID/Dominican Republic and the appropriate government agency in selecting a suitable manufacturer of the steel handpump. This will consist of providing clear, concise engineering drawings and specifications for the bidding process, assisting in evaluating the bids and evaluating the bidders' ability to produce acceptable pumps in a timely manner.

5. Once the manufacturer or manufacturers have been selected, provide them with management and technical assistance in areas of manufacturing processes, quality control, cost control and production control.

GEORGIA TECH IS A UNIT OF THE UNIVERSITY SYSTEM OF GEORGIA
AND AN EQUAL EMPLOYMENT/EDUCATION OPPORTUNITY INSTITUTION

6. Concurrent with item 5, train representatives from the manufacturers, SESPAS and U.S. AID in methods and criteria for handpump acceptance, inspection and testing.

7. Train installation crews in handpump installation using the installation equipment and system developed for the GIT steel handpump.

8. Develop a system for acquiring, storing and distributing handpump spare parts.

9. Monitor the installation and performance of the steel handpumps and make changes in the program as indicated necessary.

As you know, I was somewhat conservative in recommending that the AID handpump design be replaced with the GIT steel handpump design and with good reason. Our first generation design had certain design weaknesses that did not become evident until the handpump had encountered actual usage under field conditions. We now have enough data from both laboratory accelerated life testing and field testing to be able to recommend this steel pump as a replacement for the traditional AID cast iron handpump. In my memo of January 1984 to Dr. Henry Van, of which you received a copy, I made certain qualitative comparisons between the AID cast iron and the GIT steel handpumps. At the risk of being redundant, I will repeat that list.

	AID Cast Iron Pump	GIT Steel Pump
1. Base Material Cost (Steel vs. cast iron)	Lower	Higher
2. Accessory Material Cost (Pins, bushings, bearings, etc.)	Higher	Lower
3. Manufacturability (Ease of manufacturing)	Poorer	Better
4. Ability of Medium Skilled Workers to Produce High Quality	Lower	Higher
5. Number of Moving Parts	More	Fewer
6. Availability of Base Material (Steel vs. cast iron)	Restricted Availability	Readily Available
7. Availability of Accessory Material (Steel for pins and bushings, bearings, chain, etc.)	Restricted Availability	Readily Available

		AID Cast Iron Pump	GIT Steel Pump
8.	Corrosion Resistance of Base Material (Steel vs. cast iron)	Higher	Lower
9.	Routine Maintenance Requirements	Higher	Lower
10.	Ease of Maintenance (Replacement of leather cups, etc.)	More Difficult	Easier
11.	Initial Cost of Pump	Higher	Lower
12.	Ease of Installation	Same	Same
13.	Cost of Installation (1 1/4" pipe vs. 2" pipe)	Lower	Higher
14.	Probable Life Cycle Cost	Higher	Lower

I strongly feel that the GIT steel handpump is a reliable piece of equipment with both a relatively low initial cost and a very favorable life cycle cost that can be produced in the Dominican Republic by a great number of metal fabricators. I sincerely hope to see this program continued.

Very truly yours,

Ben E. James, Jr.
Senior Research Engineer

BEJ/lmk
cc: Dr. Kenneth Maddox
Mr. Phillip Potts
Ing. William Smith, U.S. AID/Santo Domingo

	STATIC WATER LEVEL	TOTAL DEPTH	PIPE & ROD INSTALLED	MANUFACTURER	DATE OF INSTALLATION	FLOW RATE (GPM)[1] AS OF DATE INSTALLED	FLOW RATE (GPM)[1] AS OF 1/31	ADITIONAL INFO.
P1 EULOGIA GONZALES	20'	59'	50'	CEDEÑO	1/23/84	5	5	BASE GROUTED [redacted]
P2 JULIO ANTONIO MELO	11½'	49'	40'	CEDEÑO	1/24	5	3½	VERY SHALLOW WELL. WORKS AFTER ADDING 1 WEIGHT.
P3 CHUNICA DE CARRETON ✓	12½'	30½'	20'	CEDEÑO	1/24		3¾	
P4 MANUEL CARMONA	14½'	60'	50'	SENRA	1/25		3½	
P5 TOMAS CARMONA	29½'	61'	50'	SENRA	1/25		3	
P6 MILAGROS MEJIA - GORLEY	18'	72'	60'	CEDEÑO	1/28	5	4	PUMPED MUDDY WATER ALL BY 1/29 WATER CLEARED TWO WEIGHTS WERE ADDED.
P7 OLGA POLANCO	7'	47'	40'	CEDEÑO	1/28	5	5	
P8 JOSE PEREZ CARRETON	12'	24½'	15'	CEDEÑO	1/29		4	
P9 ALEJANDRINA GONZALES ✓	39'	62'	55'	[redacted]	1/29		4	
P10 MARTA MARTINEZ	11½	34½'	25'	AID MODIFIED	1/30		3¼	
P11 ~~EPIFANIA DE LOS SANTOS~~ ELSA LUGO ✓	28'	60	50'	CEDEÑO	1/30	5⅓	4	
P12 PURA CARMONA	8'	46'	30'	AID MODIFIED	1/31		3½	

NOTES 1. GPM AT 40 STROKES/MIN, FULL STROKE.

2. MANUFACTURER COLOR
   - CEDEÑO : GRAY
   - SENRA : ORANGE
   - MARIND : [redacted]

3. THE MARIND PUMP AT ALEJANDRINA GONZALES (#9) AND THE CEDEÑO PUMP AT EPIFANIA DE LOS SANTOS (# HAVE SEALED BEARINGS (NACHI 6001 NSL). ALL THE OTHER CEDEÑO AND THE SENRA PUMPS HAVE SHIELDED BEARINGS (NACHI 6001Z) AS OF JAN 31.

APPENDIX B

Description of the India MK II Handpump

Previous Page Blank

Est cost 250.00/unit FOB India

INTRODUCTION

Hand Pumps are the most economical means of providing water supply in rural and outlying urban areas. The conventional hand pumps being used in India for the past several decades are made from cast iron and have several drawbacks, such as low discharge, inefficient operation requiring greater manual effort, shorter life span and inability to work at depths beyond 8 metres. To overcome these drawbacks and to provide rural India with a more dependable product, we, at INALSA, have developed the India Mark II Deep Well Hand Pump with the close co-operation and guidance of an international agency.

The Pump has the following salient features :

—Capable of pumping water with great ease from depths of 25 metres to 60 metres.

—Sturdy design to withstand continuous operation by larger communities for longer periods.

—Very nominal maintenance cost. Maintenance can be done by relatively unskilled personnel.

—Easy installation.

—Fully covered to avoid contamination of water by external sources.

—Reasonable price.

A WORD ABOUT INALSA

INALSA is well known in India for high quality light engineering products. The company, along with its two associates, is engaged in the manufacture of several products—including India Mark II Hand Pumps, household knitting machines, precision tools for the engineering industry, special purpose machines and marketing of automobile ancillaries and engineering products like graded and non-graded castings.

The production of Deep Well Hand Pumps was started in the year 1977, and now INALSA is the largest manufacturer of these pumps in India.

INALSA—A NAME THAT MEANS QUALITY

India Mark II Deep Well Hand Pumps are manufactured in a well equipped factory in New Delhi, staffed with highly trained and skilled personnel. Great emphasis is laid on quality control, and rigid standards are maintained to ensure a flawless product that will provide trouble-free service year after year.

In addition to our own quality control team, our products are also tested by an internationally known British firm, specializing in the inspection of engineering goods. The exacting requirements of this agency have helped us in constantly improving our quality.

No pump is approved without a thorough inspection of incoming materials and meticulous checks at every stage of manufacture. In addition, every pump is carefully examined to ensure distortion-free, leak-proof welding and an external finish of the highest quality.

Additionally, the pumps are continuously subjected to field trials so that data regarding their functioning is constantly available for future improvements.

EXPORTS

India Mark II Deep Well Hand Pumps, manufactured by INALSA, have already been exported to the following countries :

—Sudan, Zaire, Upper Volta, Togo, Benin, Ethiopia, Uganda, Kenya & Botswana in Africa.

—Burma, Bangladesh, Indonesia & Phillipines in Asia.

—Haiti in West Indies.

ADVANTAGES

The ingenious design of India Mark II Deep Well Hand Pump, incorporating a long and heavy handle, ball-bearings and chain, results in several advantages :

* A mechanical advantage of approximately 8:1 in the handle bar lever, coupled with the differential weight on the two sides of the fulcrum point, gives a moment ratio of over 30:1 which ensures effortless operation. Even a 10-year-old child can easily operate the pump.
* Use of sealed ball-bearings further adds to the operational ease and ensures years of trouble-free performance.
* Use of high quality raw materials and close machining tolerances guarantees long life even under continuous use. The pump has a life span of over 150 million strokes—which works out to approximately 20 years if used for 8 hours every day.
* All materials used are indigenous and supply of spare parts is assured.
* As already mentioned, the design overcomes all the undesirable features of conventional cast iron hand pumps.
* Can be installed in multi-storeyed buildings.
* Can be easily adapted to motorised operation.
* Can be adapted for shallow well operation with minor modifications.

DESCRIPTION

The hand pump consists of 3 major assemblies :

1. Pump head assembly
2. Cylinder assembly
3. Connecting rod assembly

The three assemblies mentioned above form a complete pump ready for installation, except for the rising main (GI pipes) which can also be supplied by us if required.

1. Pump Head Assembly

Figure 1 shows the details of pump head assembly. A part of the connecting rod is also shown in the figure although this forms a separate assembly by itself. The pump head is supplied in attractive hammertone green paint finish, except for the bottom portion which is painted bright red up to the level where it is to be embedded in the ground. This is basically done for easy installation. Water tank is completely hot dip galvanised and in addition painted from outside to harmonise with the rest of the pump. Bottom inside portion of the conversion head epoxy painted to prevent rusting.

Pumps can also be supplied in a fully galvanised condition.

Best Available Document

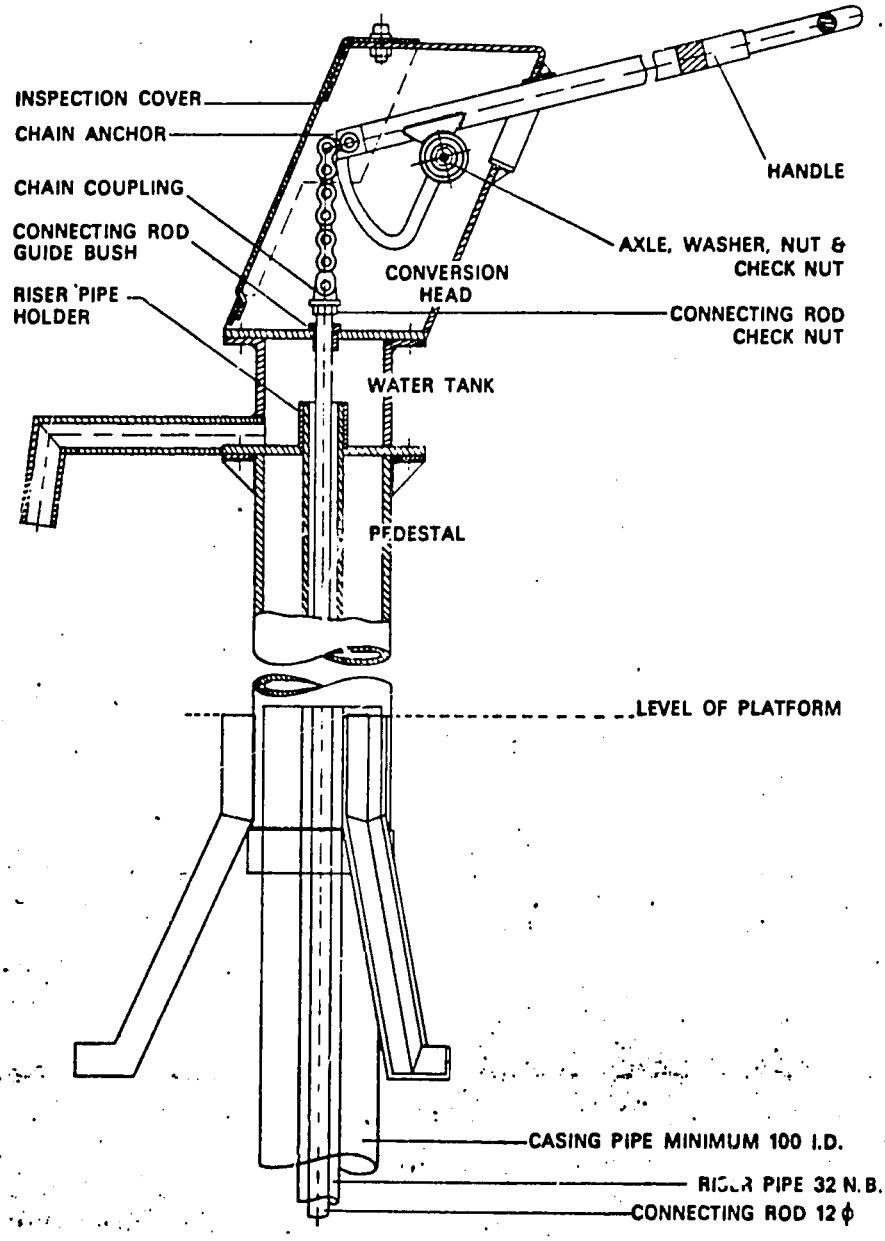

Figure 1

The pump head assembly is further divided into 3 sub-assemblies for the sake of convenient transportation: (a) conversion head, (b) water tank and (c) pedestal. The 3 sub-assemblies can be put together easily with nuts and bolts which are supplied along with the pump head.

2. Cylinder Assembly

As shown in Figure 2, the cylinder assembly consists of a sturdy cast iron sleeve fitted on the inside with a seamless brass liner having excellent inner surface finish. The ends of the liner are properly flared to hold it securely to the cast iron sleeve. The brass liner ensures smooth operation and is non-corrosive as well as highly abrasion-resistant. Moving parts of the assembly are cast in gun-metal and accurately machined. Sealing is provided by special rubber rings and cup washers made from specially developed leather. All parts in contact with water are odourless, tasteless and have a high degree of resistance to any mineral deposits. The assembly thus ensures supply of clean potable water.

3. Connecting Rod Assembly

Connecting rods are available in standard lengths of 3 metres and are made from cold drawn mild steel bright bars.

A hexagonal coupling is screwed and welded on one end of each rod and the other end is accurately threaded. A lock nut is also provided. Each connecting rod is electro-galvanised for protection against corrosion (Figure 3).

A suitable number of connecting rods can be ordered by customers depending upon the static water level at the place of installation. The rods can be joined together easily by screwing the coupling end of one rod on to the threaded end of the other.

Connecting rods are available in 12 mm and 16 mm diameters.

SPECIFICATIONS

Particulars	Unit	Amount
Water depth – optimum	metre	30-33
Cylinder I.D.	mm	63.5
Stroke	mm	100
Strokes per minute	nos.	40-50
Discharge per stroke	litres	0.32
(does not vary with depth)	Imp. gallons	0.07
Discharge per hour	litres	800-1000
	Imp. gallons	170-210

Note : When the cylinder of the pump is installed at a water depth of 25 metres and more, the weight of connecting rods (12 mm dia.) and water column provides a positive downward stroke. In case of installation at less than 25 metres but more than 15 metres, the corresponding loss in weight of connecting rods can be made up by use of heavier rods (16 mm dia.) in order to provide a positive downward stroke.

Since this pump works on the principle of positive displacement it can function virtually at any water depth beyond 25 metres.

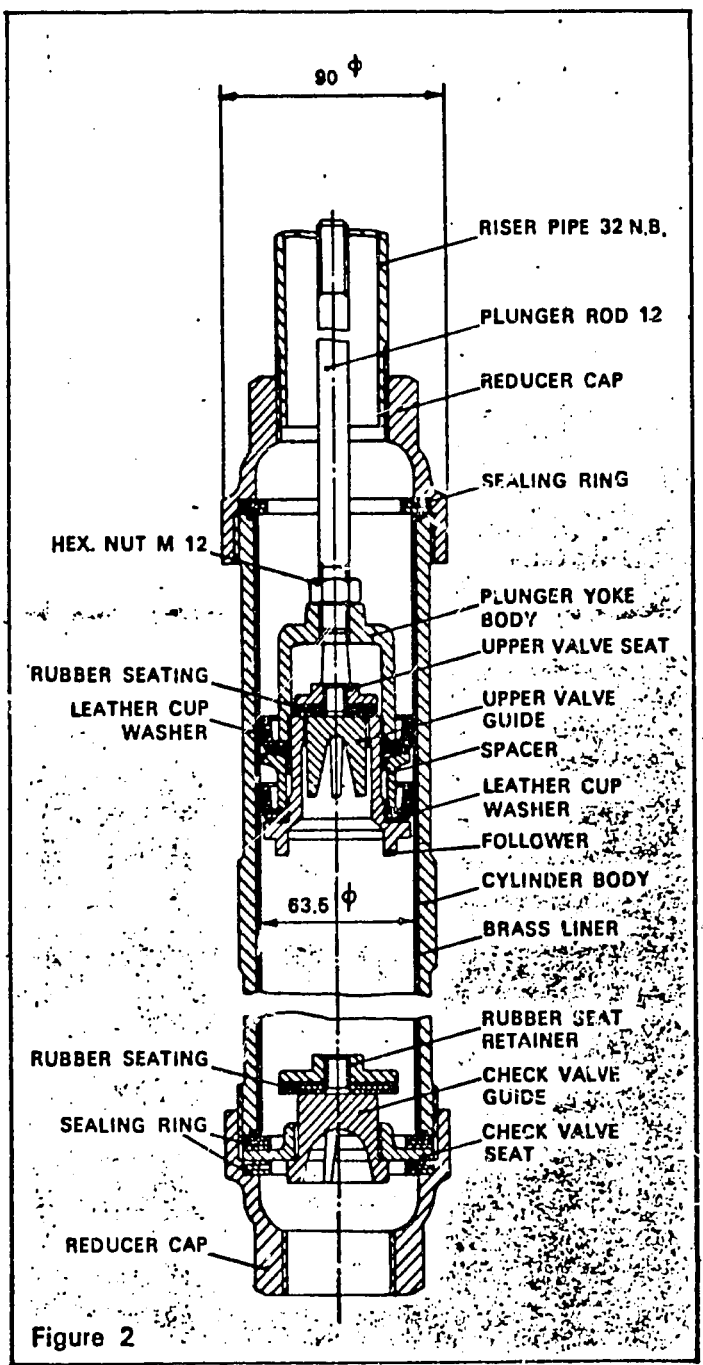

Figure 2

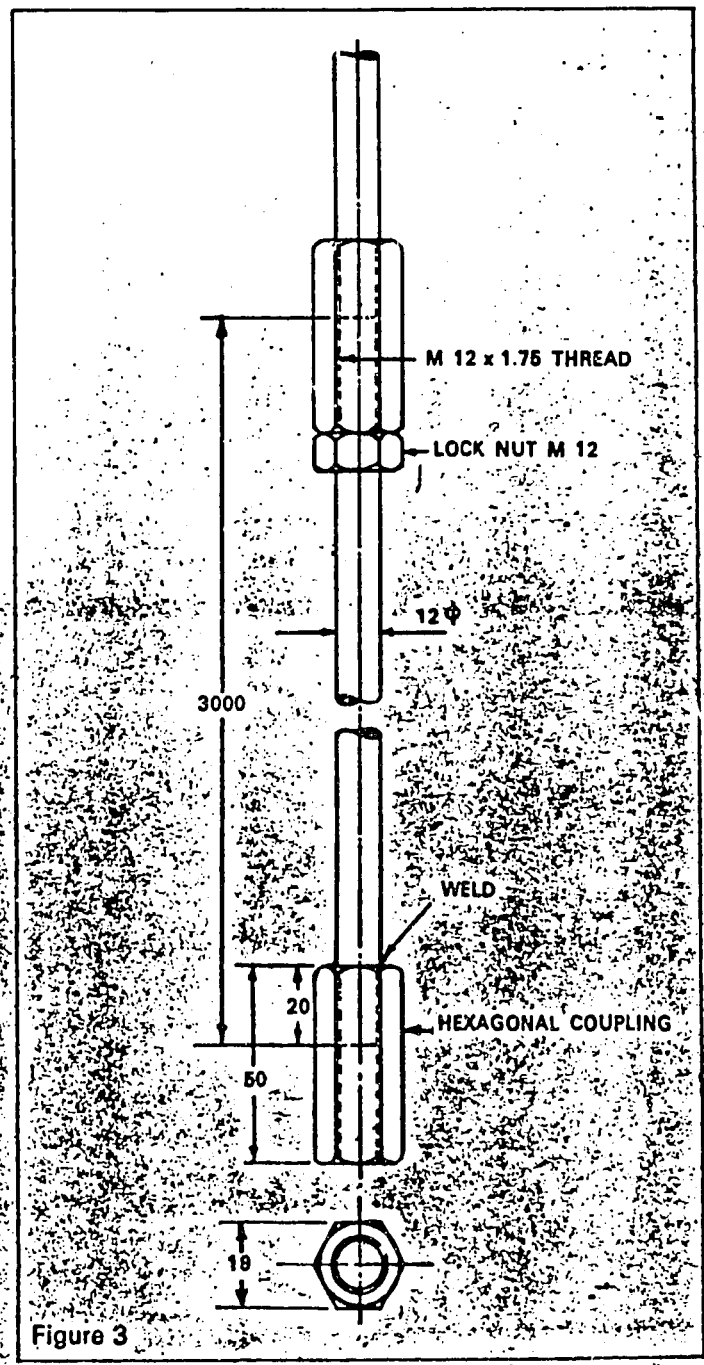

Figure 3

NOTE: ALL DIMENSIONS ARE IN MM UNLESS OTHERWISE MENTIONED.

INSTALLATION

Installation of the India Mark II Deep Well Hand Pump is extremely simple.

This pump can be installed in a bore well of minimum 100 mm diameter. It involves the following basic steps :

1. Grout the pedestal assembly in concrete over the casing pipe of the bore well.
2. Screw on the cylinder assembly to the bottom end of the rising main (32 mm GI pipe). Also screw on the connecting rod to the plunger rod of the cylinder assembly. Lower both the rising mains and connecting rods to the desired depth.
3. Screw on the water tank sub-assembly to the last rising main.
4. Mark the position on the connecting rod in level with the top portion of the water tank. Pull the connecting rod up and saw off the rod where marked.
5. Put the conversion head in place and screw the connecting rod to the chain and welded coupling.
6. Insert the handle and put in the handle axle.
7. Screw on the inspection cover.
8. Tighten all nuts and bolts.

INSTALLATION TOOL KIT

Installation Tool Kit consisting of tools shown in Figure 5 is also provided at extra cost. Customers are advised to keep at least one set available in each area where pumps are to be installed. These tools are very helpful in regular maintenance of the pump.

1. Lifting spanner (set of 3 Nos.)
   —use to lower or lift the rising main pipe.
2. Lifter pipe – 1 No.
   —use to lower or lift the water tank and rising main together.
3. Crank spanner (17 mm x 19 mm) (set of 2 Nos.)
   —use for tightening and loosening of flange bolts, check nuts and chain anchor bolt.
4. Connecting rod vice – 1 No.
   —use to clamp the connecting rod before you cut or thread the rod.
5. Connecting rod lifter and axle pin holding spanner – 1 No.
   —use to lift connecting rod, to test pumping action and to tighten/loosen axle.
6. Axle Punch – 1 No.
   —use to drive axle out of the bearing without damaging axle threads.
7. Heavy Duty Clamp – 1 No.
   —use to lift or lower rising main pipe and connecting rod. Provides easy and semi-automatic operation.

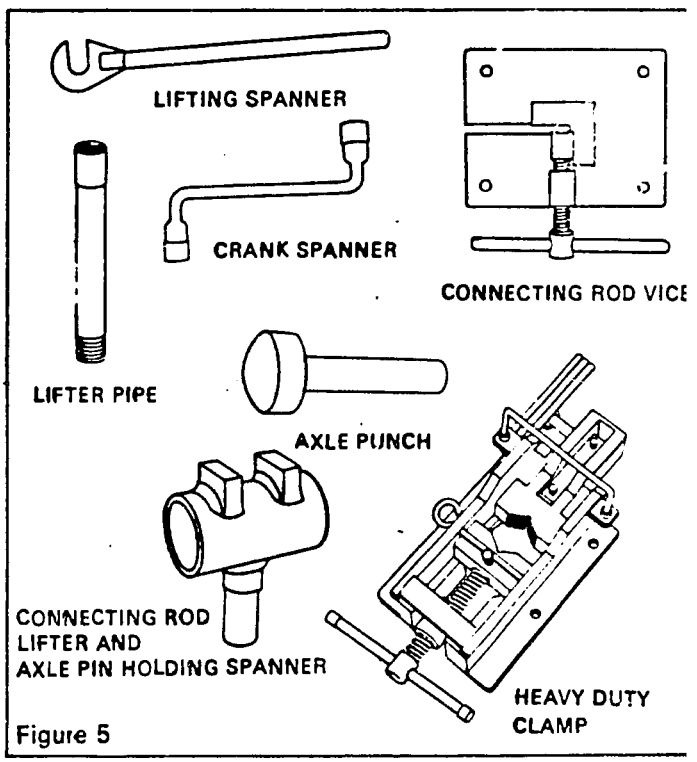

Figure 5

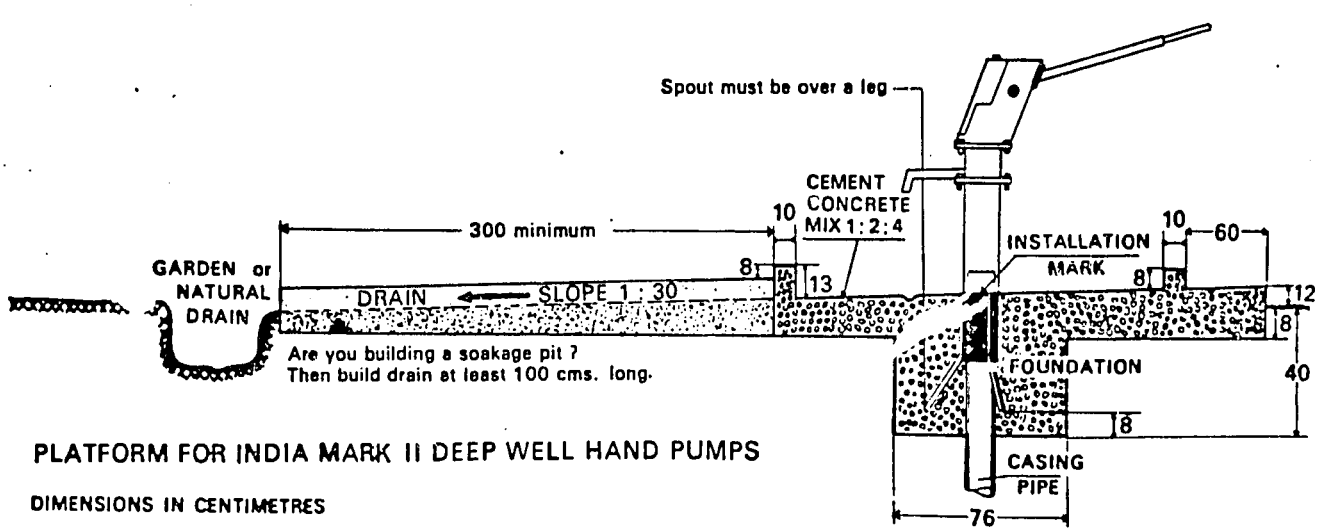

PLATFORM FOR INDIA MARK II DEEP WELL HAND PUMPS

DIMENSIONS IN CENTIMETRES

Figure 4

APPENDIX C

"Blair" Type Pump Being Tested in Papua New Guinea

DEPARTMENT OF MINERALS AND ENERGY

GEOLOGICAL SURVEY

The attached information may not be published in any form or used in a company prospectus or statement without the permission in writing of the Secretary, Department of Minerals and Energy.

TECHNICAL NOTE

Previous Page Blank

PRELIMINARY

P.N.G. VILLAGE PUMP-GEOLOGICAL SURVEY VERSION
INSTALLATION MANUAL

by G.E. Seidel

CONTENTS

LIST OF SUPPLIED COMPONENTS	1
PREPARING A WATER BORE FOR PUMP INSTALLATION	2
PREPARING THE PUMP FOR INSTALLATION	4
INSTALLING THE PUMP	11

P.N.G. Village Hand Pump Disassembled Components
(Geological Survey Version)

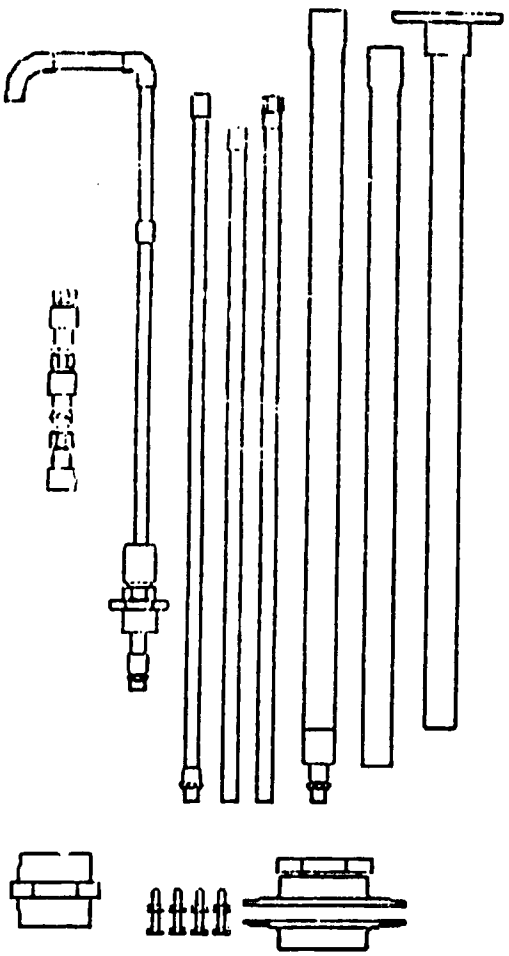

LIST OF COMPONENTS:

Top left to right:

Foot-valve and piston valve assembly
Spout pipe with reducing bush assembly
Piston pie upper section
Piston pipe extension
Piston pipe upper section
Cylinder pipe lower section
Cylinder pipe extension
Cylinder pipe upper section

Bottom left to right:

4 inch nipple for attaching pump to cement base
4 bolts and nuts for joining flanges
Upper Flange with reducing bush and lower flange

All the parts which you see in the picture above are normally included with the Geological Survey version of the pump. Normal packing is: all the pipes wrapped into a bundle, the valves and the parts on the lower part of the picture in a cardboard box together with this manual.

In some versions you will also find a 4 inch G.I. socket to be used with the 4 inch nipple for giving the pump a solid base in the cement around your water bore.

PREPARING A WATER BORE FOR PUMP INSTALLATION

The pump mounting supplied with this pump is based on a pair of 4 inch (100 mm) galvanized iron flanges. These can be attached to any male four inch thread as found on four inch water pipe or fittings. The proper term for this thread is "four inch BSP thread". If your bore has such a thread at the top already then you can skip this page.

If not then you have to provide a four inch thread. This can be done by welding a four inch pipe fitting to a bore finished with steel pipe - or casing as it is called by the trade. Or if your bore is finished with three inch PVC (plastic) pipe then we suggest the method shown below.

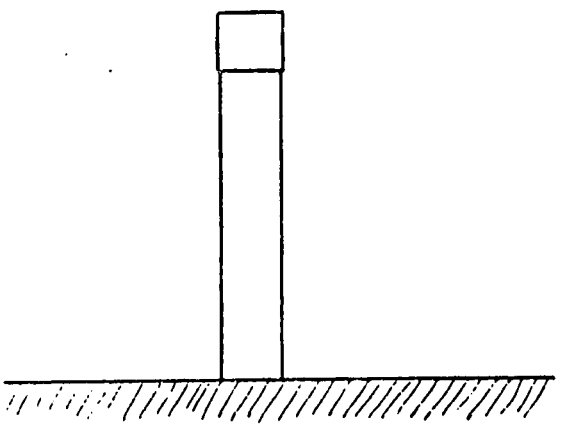

The picture on the left shows a typical water bore with three inch plastic pipe sticking out of the ground and a cap on top.

Dig around the casing pipe as shown on the picture below, about two feet or half a metre is enough. Prepare enough cement or concrete mix to fill the hole well and make a little platform around it. Pack the cement mix into the hole tightly.

This cement plug will stop any water from the surface from running down into the bore and make the bore water dirty.

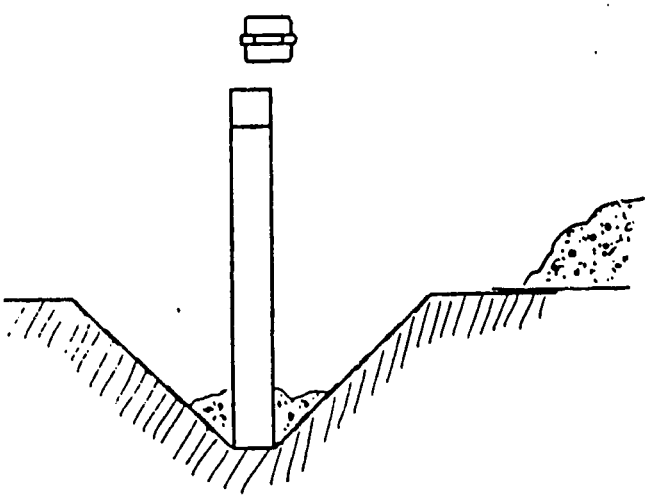

Around the three inch pipe and into the top of the wet cement push the four inch nipple supplied with the pump so that only the top thread above the cement. To make the fitting strong use a very good cement mix or even better weld some short steel bars to the outside of the nipple before putting it into the cement or use a four inch pipe coupling with the nipple to give it a deeper base.

Make sure the nipple sits tight in the cement, that there is no gaps for the water to get in and make the surface smooth.

When you are finished the bore should look similar to what you see on the next page.

If your bore is different and you can't use the supplied nipple make sure that you end up with a male four inch thread a few inches above the ground and a water tight cement seal around it to stop dirty water from getting into your bore.

The picture below shows a water bore with the four inch nipple embedded into the cement around the bore casing pipe. Note that the casing still has its cap on. If you leave the cap of then it won't be long before some children will have filled the bore up with stones right to the top. If this happens forget about reading the rest of this manual. You won't be able to use this pump for pumping stones.

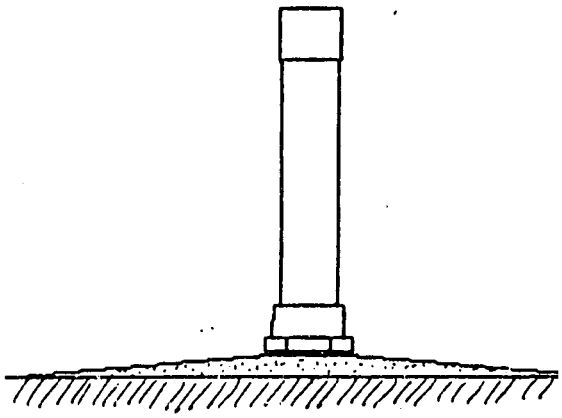

IMPORTANT IMPORTANT IMPORTANT

Allow the cement to dry for at least one day and one night even better two days. The cement may look strong after only a few hours but for holding the pump in place it needs to be a lot stronger.

When the cement is dry cut off the casing pipe just above the nipple as shown below and thread the lower four inch flange (the one without the "Reducing Bush" in it) over the four inch nipple in the cement

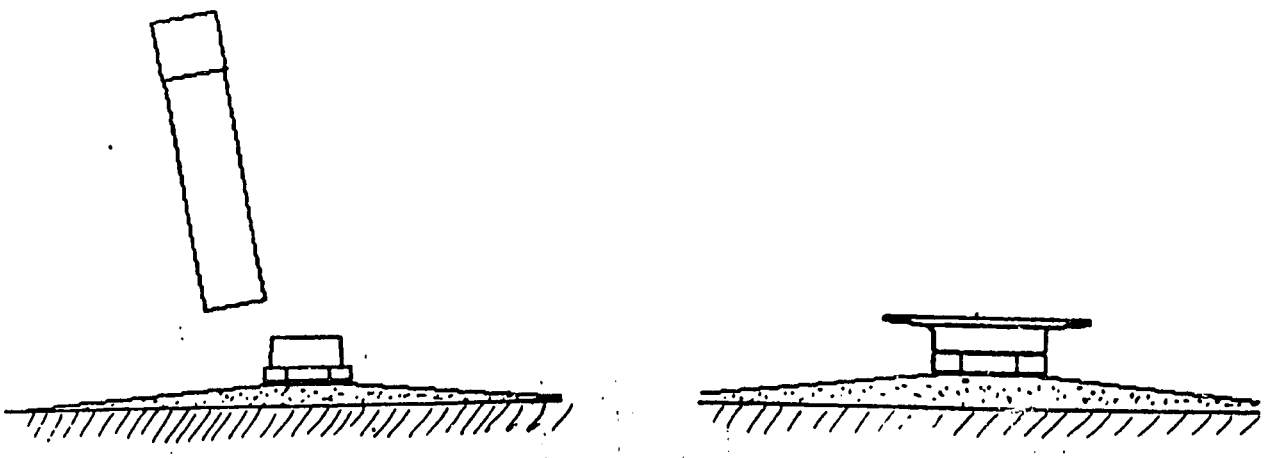

PREPARING THE PUMP FOR INSTALLATION

Before you can install the pump it has to be made to the right lenght. What this means is that the pump must be long enough so that its bottom part is always about a meter (or three feet) below the water level inside the bore. The problem is: water levels change. Water levels will be lower at the end of the dry season and higher at the end of the wet. When you pump a bore the water level will drop because you are taking water out. When you stop pumping the water level will come up again as new water flows into the bore from the ground around it. To predict how much the level changes can be quite difficult.
So to be safe make the pump long enough so that its bottom is about three to four meters below the water level but it also must be at least half a meter above the bottom of the bore.

To make the right decision you first have to measure the water level and the depth of the bore. To do this get a long tape measure or good string or thin rope and tie something heavy to the end. A big steel bolt or nut will do.

Lower the string or tape measure into the bore until whatever you tied to its end touches the water. You should be able to hear it when it touches.

Make a mark on the string where you found the water level

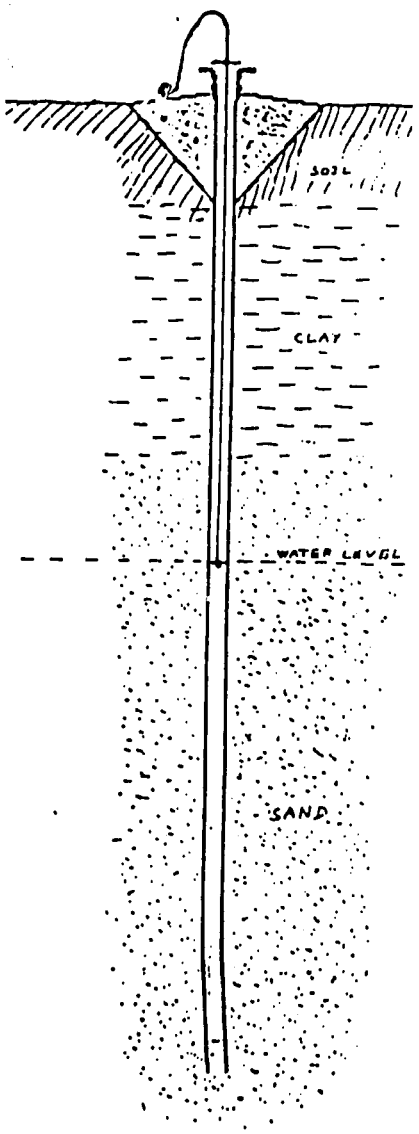

Then lower the string further down until it touches the bottom. You will notice the string getting slack when you touch the bottom. Make another mark on the string there.

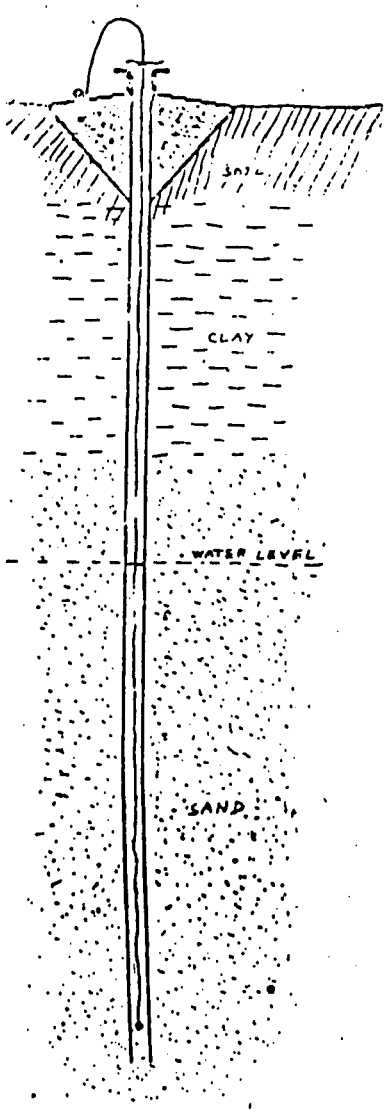

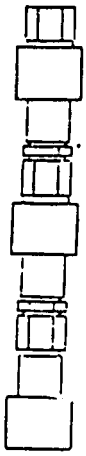

Pull the string out again and lay it stretched out on level ground. You are now ready to measure the pump against this string with the marks for the water level and the bottom of the bore. You may want to also write down these lengths so that if you measure the water level again some other time then you know whether it changed and by how much.

But before you can lay out the pump to measure there is just one last small preparation. On the left you see the pump valve assemblies as they are supplied with the pump - still screwed together. Separate them into the foot-valve and the piston valve as shown on the right. The valves themselves are actually identical but the valve used for the piston has another fitting screwed to its bottom called the "piston-cup". You can take the piston cup off and screw it to the other valve instead. Whichever valve has the piston-cup on it is the piston-valve and the other is the cylinder valve.

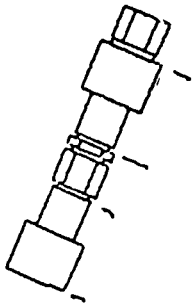

Take the cylinder-valve or let's call it foot-valve and attach it to the bottom of the pump cylinder. Fit the threads together carefully and tighten it with your hands. Tightening with a spanner is not necessary.

The bottom part of the piston should look now as is shown on the right.

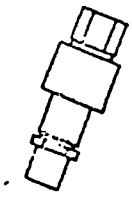

Since you made the marks on the measuring string against the top of the bore when measuring the water level and the bottom of the bore you have to use the string upside down for laying out the pump correctly.

Position the top of the cylinder with the plastic flange against the end of the measuring string where the weight was or is attached. This part is easy, the next part can be a bit more complicated depending on how good your bore is. We suggest you follow the following rules:

1. The bottom of the cylinder with the foot-valve attached must be more than half a meter (two feet) above the mark indicating the bottom of the hole. If the valve gets to close to the bottom it may suck in dirt when the pump is used. If you can make this distance more without conflict with the next rule do so.

2. The mark indicating the water level must be at least one metre above the foot valve. If the pump is not deep enough it will not work properly. One or two metres below the water level is often enough. But if the water level in your bore drops during the dry season or if it changes a lot when the bore is pumped then the pump has to go deeper. As an average three or four meters is best for most bores.

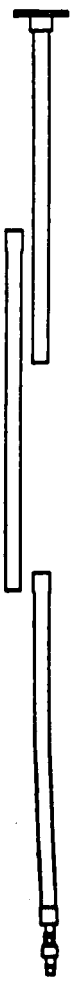

Place the bottom section of the cylinder against the measuring string so that the foot-valve is in the right position above the bottom of bore mark and below the water level mark on the string.

You can now lay out cylinder extension pieces to close the gap between the top and the bottom section. Lay them out so that they overlap by the lenght of the socket where they will be joined.

One piece will probalble have to be cut for getting the right length. On the picture to the right one extension is used. It is laid out to overlap with the socket on the bottom piece. The top piece will have to be cut then to make it fit into the socket of the extension piece.

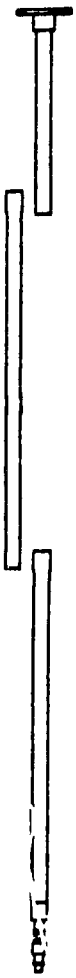

The picture on the left shows the top section cut already for joining. The cut has to be straight and clean.

IMPORTANT IMPORTANT IMPORTANT

Joints on this pump are made with PVC Solvent Cement and to this correctly is very important. If you don't follow the correct procedure you may spoil the pump or even worse parts of the pump may fall into the bore and block it

1. Use only PVC Solvent Cement nothing else.

2. Use only fresh Solvent Cement, if it is more than a few months old it may look like jelly. If it does throw it away and get fresh one.

3. Make sure all cuts on the PVC pieces to be joined are straight.

4. Clean the inside of the sockets and the ends of the pipes where they are to be joined thoroughly, with a PVC cleaning fluid if you have some with a clean cloth if you don't.

5. Make sure all the surfaces to be joined are completely dry. before applying Solvent Cement.

6. Apply the cement evenly over the pipe end which goes inside the socket enough to completely cover it but so much that it is dripping.

7. Push the pipe end into the socket firmly then turn for about half a turn and hold tight for about ten seconds.

8. Handle fresh jointa carefully without bending until they have dried for at least ten minutes.

Please follow all these rules if you want your pump to work well.

On the right the picture shows the cylinder completely joined. But not yet ready for installation. It has to dry for at least one day just like the piston pipe, which you still have to make up to the matching lenght.

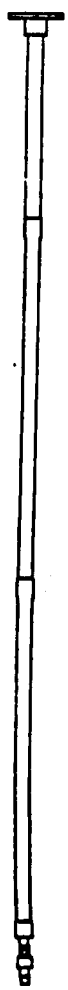

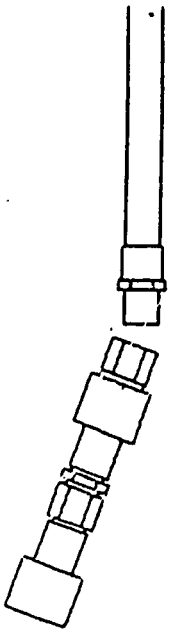

For assembly of the piston pipe first attach the piston valve to the bottom section of the piston pipe as schown on the left. Join the threads properly then tighten with your hand. As with the foot-valve on the cylinder tightening with a spanner is not necessary.

Then lay the piston pipe section with the valve along the lower part of the cylinder pipe so that the end of the piston valve is about ten centimeters above the end of the cylinder pipe, as shown on the right.

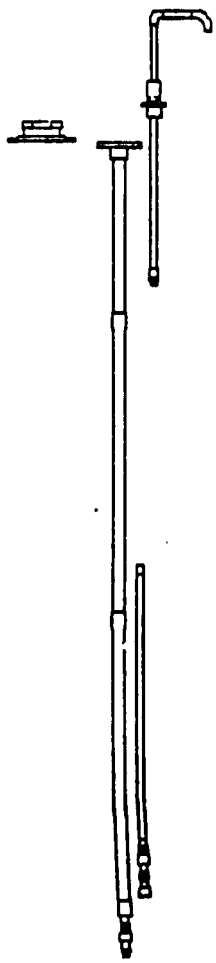

Now take the spout pipe, slide the reducing bush assembly on it as far up as it will go. Lay out the spout pipe and the upper flange next to the top of the pump cylinder as shown on the left.

When installed the top flange is going to sit on the top of the cylinder and the reducing bush assembly on the spout pipe is going to fit into the larger reducing bush on the top flange. By lining them up as shown and making sure that the spout pipe is pushed as far through the bush assembly as it will go you now can measure by how much the piston pipe has to be extended to fit.

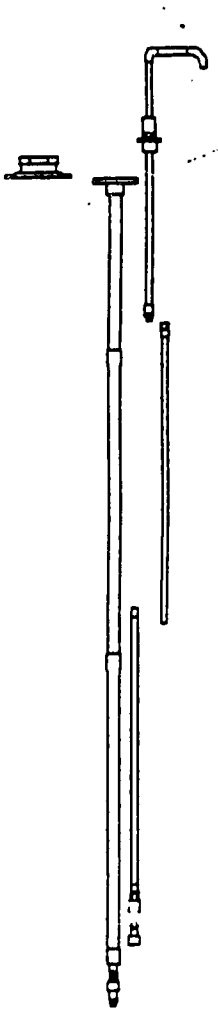

Now take the top section of the piston pipe and if it is too long cut it to fit as shown on the left. If it is to short use the extension piece or pieces together with the top section lay them next to the cylinder and cut them as needed to fit.

You can now join the PVC sections of the piston pipe together with PVC solvent cement the same way as you did when joining the cylinder. What you have now should look similar to the picture on the right.

If PVC solvent cement would dry instantly you could install the pump now. BUT it does not dry instantly.

IMPORTANT IMPORTANT IMPORTANT

After joining the pump with solvent cement let it dry for at least one full day.

This is because the joints have to be completely dry before you feed the piston into the cylinder. There is always some solvent cement on the inside of the cylinder pipe near the joints and this can get onto the piston cup and valve and make them stick.

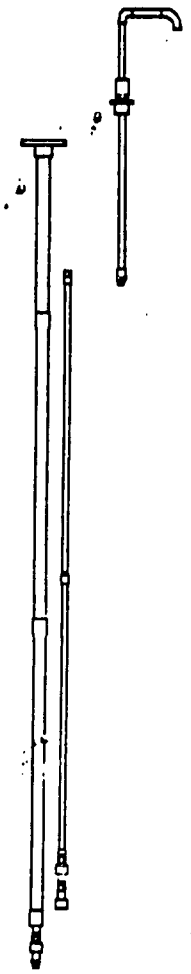

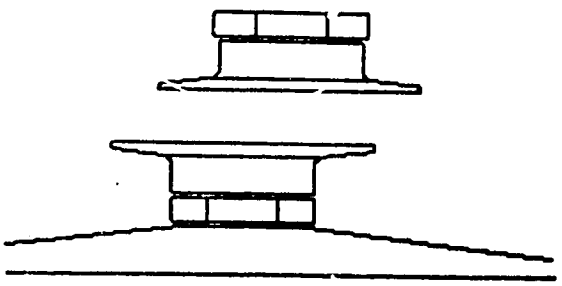

Store the pump components somwhere where the joints can dry safely. When carrying the pump pipes around keep the valves off the ground or you might have to spend some time cleaning the dirt out of them.

Secure the borehole now. An easy way to close it off so that no one can throw any stones or rubbish into it is to use some of the pump parts.

Put the top flange on top of the lower flange as shown on the left.

Find the bolts and nuts which were supplied with the flanges and join the flanges with the bolts. as shown on the left.

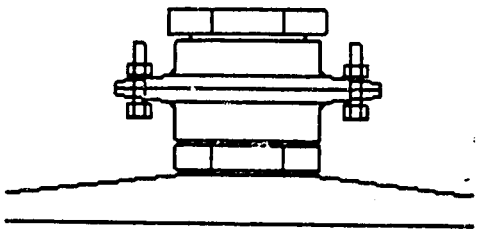

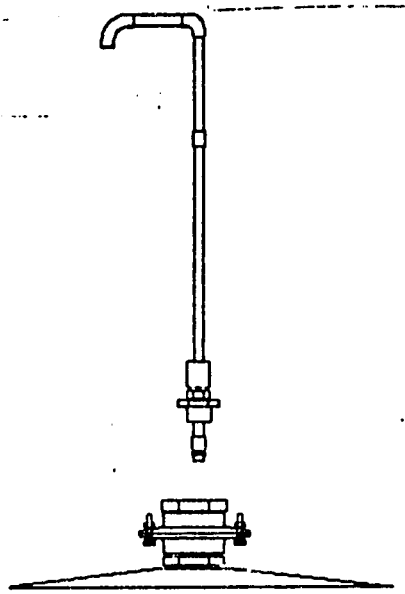

Feed the spout pipe through the top of the flange until the reducing bush assembly sits on top of the larger bush inside the top flange.

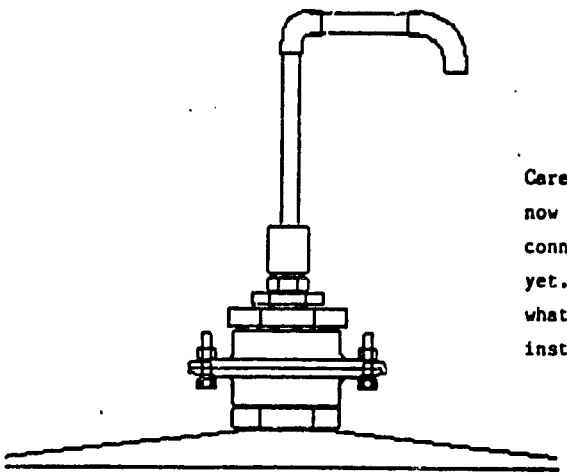

Carefully align the threads, turn and tighten. This looks now as if the pump is installed. But there is nothing connected to the spout underneath, so don't expect any water yet. Now you can go and mend a fishing net or sleep or whatever BUT let the pump dry for at least a day before you install it. You will regret it if you don't.

INSTALLING THE PUMP

Before installing the pump check that all the solvent cemented joints are dry and strong. Check all joints just in case one of them wasn't done properly.
Check that both valve units and the inside of the pipes are clean. If there is any dirt inside take the valves out and wash with plenty water then re-attach the valves.
Check that the valves are tightly threaded onto the cylinder and piston pipes. Strong hand tight is enough.
Clean the outside of the cylinder and piston pipes if they are dirty.

If you closed the bore off as suggested in the last chapter then take the spout pipe out again then remove the top flange from the pump mounting on the bore.

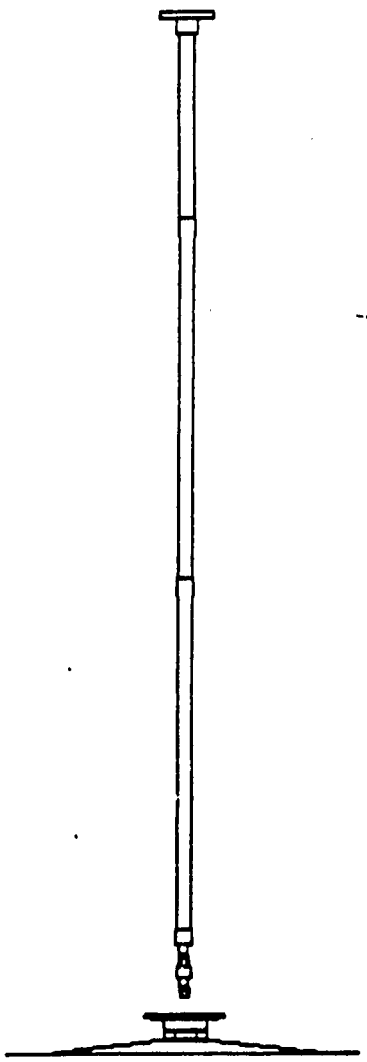

Feed the cylinder with the foot-valve attached straight into the bore as shown on the left. If the pump is long then it will bend. That is normal Use a long stick with a rope loop at the end to hold the middle part of the cylinder to keep it steady and to straighten it up.

The picture below shows the cylinder almost fully down. As the end of the cylinder goes into the water you will feel it going down more slowly. That is because the water has to force its way through the footvalve into the cylinder.

(If you don't feel the cylinder slowing down then you probably made the pump to short. Pull it out again, check whether there is water in the cylinder and if not. Go back to the section on preparing the pump and check on how you measured the water level.)

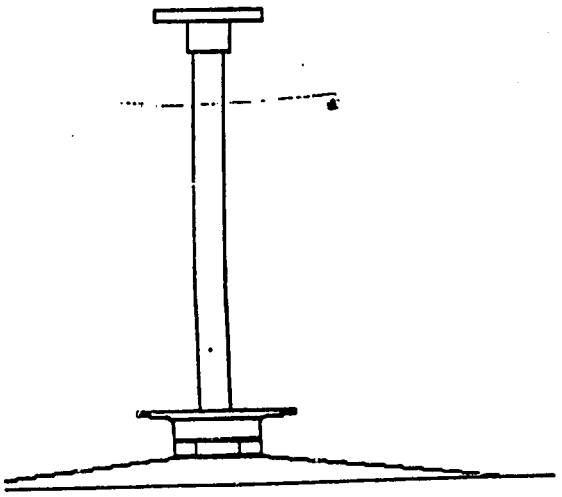

When the cylinder is fully down the plastic flange should sit flat on the lower flange of the bore mounting.

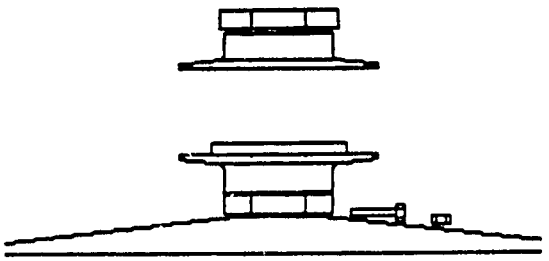

Make sure it sits in the centre. Then get the upper flange and the bolts and attach them as shown on the left.

Check again that the PVC flange and the cylinder are exactly in the centre then tighten the nuts on the bolts with a spanner.

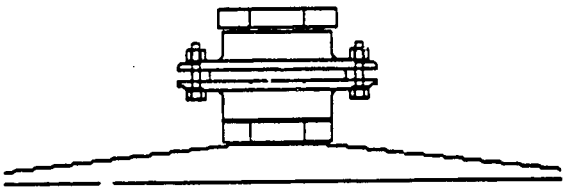

Now insert the piston pipe with the piston valve first through the PVC flange into the cylinder. The picture on the right shows the piston pipe above the pump mounting ready to be inserted.

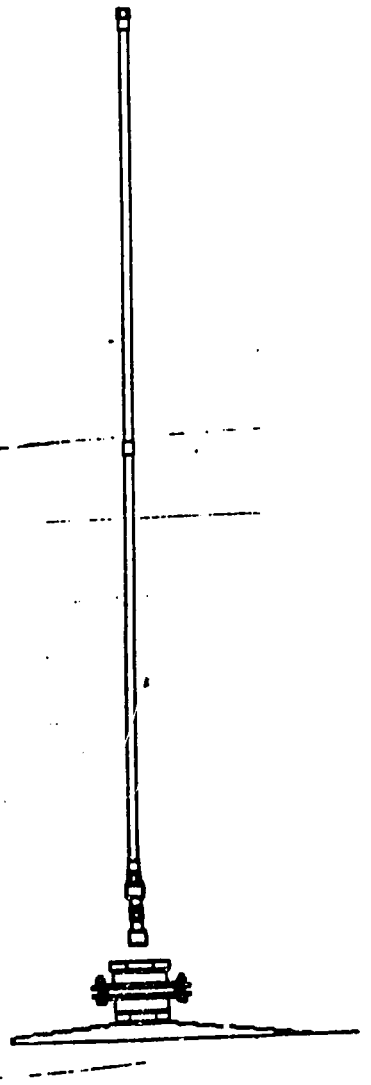

As you push the piston pipe down it may stick a few times. That is when the end of the piston valve tries to get past the joints in the cylinder pipe. The joints are rarely completely straight and often there is a little bit of hardened solvent cement on the inside of the joints. But if you followed the instructions on how to prepare the pump for installation you should have no problem. Turn the piston pipe a little whilest pushing gently and it will get past the joint.

Keep pushing the piston pipe further down but don't let it go down completely. Stop when it is as shown on the next page.

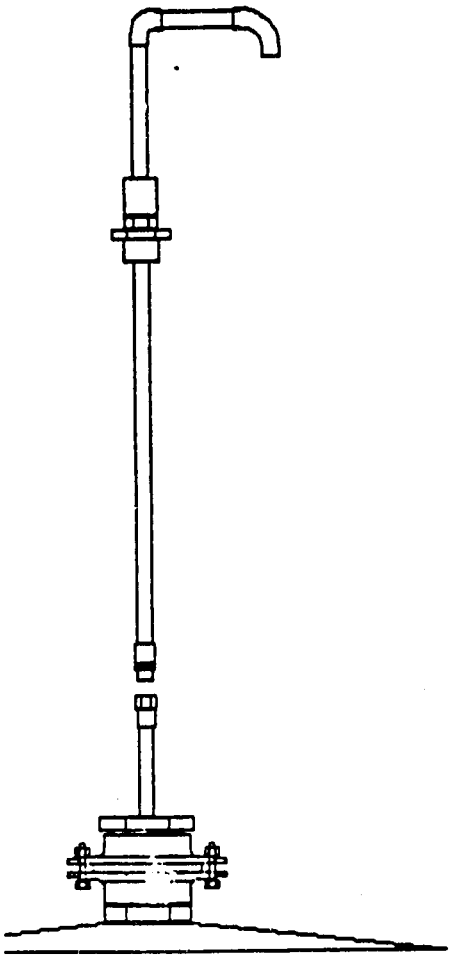

For this part you should have some one to help you. Get some one to hold the piston pipe in the position as shown on the left, get the spout and screw it into the top fitting on the piston pipe.

Watch out for the top of the spout pipe when you are turning it. It can hit your head if you are not careful.

When the spout pipe is fully screwed in by hand. Tighten it using a spanner. Tightening by hand only is not enough here.

Then lower the spout down until it sits with the thread on the bush assembly on the mating thread inside the larger bush in the top flange as shown below.

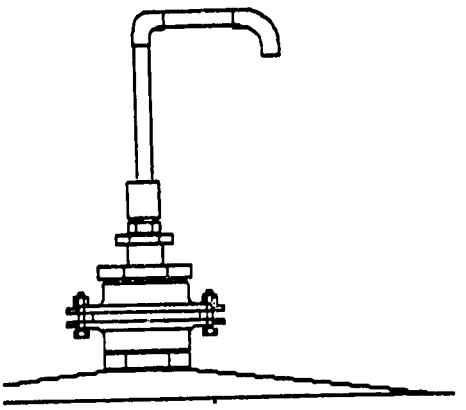

Carefully turn the bush on the spout pie until the threads engage and turn until hand tight. Then tighten it firmly with a large spanner.
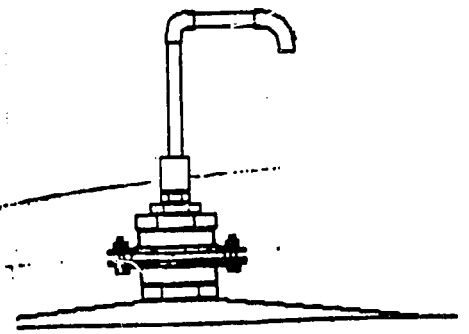
The pump is now installed and ready for use.