PN AAR 702
ISN 37932

BIOGAS PROGRAM ASSESSMENT AND PLANNING IN ECUADOR

Submitted to

U.S. DEPARTMENT OF AGRICULTURE
FOREIGN AGRICULTURAL SERVICE
WASHINGTON, D.C.

CONTRACT NO. 53-319R-1-138

APRIL 1981

J. A. Brautigam
R. T. Skrinde

OYLMPIC ASSOCIATES COMPANY
1319 Dexter Avenue North
Seattle, Washington 98109

CONTENTS

Section	Page
EXECUTIVE SUMMARY	i
1 INTRODUCTION	1
2 HISTORY OF BIOGAS IN ECUADOR	5
3 PRESENT GOE BIOGAS PROGRAM	10
4 ASSESSMENT OF EXISTING FACILITIES	19
5 BIOGAS PLANNING FOR RURAL DEVELOPMENT	68
6 BIOGAS PRODUCTION AT COMMERCIAL FACILITIES	75
7 BIOGAS FROM HUMAN WASTE AND WASTEWATER	80
8 SUMMARY AND RECOMMENDATIONS	88
APPENDIX A - LIST OF CONTACTS	A-1
B - SUMMARY OF FIELD TRIPS	B-2
C - BIOGAS ECONOMICS IN ECUADOR	C-1
BIBLIOGRAPHY	

LIST OF TABLES

Table		Page
3. 1	Summary of Existing Demonstration Digesters	17
4. 1	Digester Guamani	23
4. 2	Digester San Cristobal	27
4. 3	Digester Las Delicias	31
4. 4	Digester El Pueblito	36
4. 5	Digester Santa Elena	40
4. 6	Digester Rancho Ronald	45
4. 7	Digester Aguayacu	49
4. 8	Digester Quilanga	53
4. 9	Digester at Escuela Superior Politecnica Del Litoral (ESPOL)	57
4.10	Digester at Escuela Politecnica Nacional (EPN)	60
4.11	Digester Valle Hermoso	63
4.12	Digester Iluman	66
C. 1	Biogas Economics Comparisons	C-2

LIST OF FIGURES

Figure		Page
3. 1	Structure of GOE Relating to Non-Conventional Energy Planning and Development	12
3. 2	Location of Existing Demonstration Digesters	18
4. 1	Digester Guamani	24
4. 2	$3.5m^3$ Gasholder	25
4. 3	Digester San Cristobal	28
4. 4	Digester Las Delicias	32
4. 5	$2.7m^3$ Gasholder	33
4. 6	Digester El Pueblito	37
4. 7	Digester Santa Elena	41
4. 8	$8.8m^3$ Gasholder	42
4. 9	Digester Rancho Ronald	46
4.10	Digester Aguayacu	50
7. 1	Standard Imhoff Tank	82
7. 2	Modified Imhoff Tank	84
B. 1	Representative Photograph	B-5
B. 2	Representative Photograph	B-5
B. 3	Representative Photograph	B-5
B. 4	Representative Photograph	B-5
B. 5	Representative Photograph	B-6
B. 6	Representative Photograph	B-6
B. 7	Representative Photograph	B-6
B. 8	Representative Photograph	B-6

EXECUTIVE SUMMARY

At the request of the Government of Ecuador (GOE), the United States Agency for International Development (USAID) provided a team of engineers experienced in the technical, economical and social aspects of anaerobic digestion (biogas) facilities to assess the current GOE program and recommend a course of future action. GOE interest in biogas is based on the realization that oil and gas supplies within the country are limited and will eventually not be able to meet internal demand. Biogas, generated from a variety of organic waste feedstocks that are plentiful in Ecuador, and other non-conventional energy (NCE) technologies, have thus become a major component of GOE rural and urban development programs.

The biogas team of Rolf T. Skrinde and Jack A. Brautigam of Olympic Associates of Seattle, WA arrived in Ecuador on 17 March and spent the next two weeks conducting field investigations and meeting with representatives of the Instituto Nacional de Energia (INE), the GOE agency responsible for the development of NCE, AID/Ecuador, and United States Peace Corps (PC/E). Upon completing their studies in Ecuador, the team reviewed their findings and recommendations on the GOE biogas program with Dr. Carlos Quevedo, Director of INE and Ing. Eduardo Yanez, biogas program manager. This report provides an assessment of the existing demonstration digesters in Ecuador and the overall biogas development planning effort with recommendations on continued efforts.

The history of biogas in Ecuador goes back to PC/E experiments begun in 1974. These and other past developments are traced initially in the report.

The present INE program consists primarily of family size digesters constructed in support of GOE rural development goals. Trained PC/E volunteers have provided much of the labor and expertise required to bring these units into successful operation. These existing demonstration digesters are examined in detail.

Additionally, INE is presently investigating other biogas applications for utilization of commercially and municipally generated wastes. These include commercial residues, and human wastes and wastewaters. The opportunity and developmental concerns for these larger scale facilities are also discussed in later sections of the report.

It was concluded that biogas can be implemented in Ecuador but that the applicability is extremely dependent on localized site conditions. The existing demonstration units are providing valuable operating experience and should soon provide the performance data necessary, on which a larger development program can be implemented. However, an overall implementation plan for the country would also require the examination of commercial and municipal applications as well as a study to identify the most promising designs and locations for applications. It was finally observed that in order to increase biogas knowledge and acceptance in many areas an extensive technical training program would be necessary. On the basis of these observations, the following recommendations were made.

1. Correction of Deficiencies at Existing Facilities -
   Relatively minor design and operating deficiencies must be corrected at the existing digester units to enable an effective data collection program to proceed.

2. Systematic Evaluation of Demonstration Facilities -

   A data base must be developed in an orderly manner that will provide the necessary technical input for improved digester design standards.

3. Expansion of Demonstration Facilities -

   New demonstration sites are required to investigate the potential of utilizing commercial and municipal wastes including plant wastes, sewage and human wastes.

4. Future Implementation Program -

   A phased biogas implementation plan for GOE that is based on the results of existing and newly built facilities should be developed.

5. Education and Training -

   A thorough public education program including transfer of technical information and training is crucial to the overall planning effort and GOE development goals.

SECTION 1

INTRODUCTION

The Government of Ecuador (GOE) is fortunate to have a supply of oil which is adequate to meet its present national needs, but on the other hand this non-renewable energy resource is rapidly being depleted. In fact, if the recent past indexes of per capita internal use, population growth, and oil extraction were to be extrapolated into the future, Ecuador would be a net importer of fuel within the next decade. For this reason, GOE is interested in developing non-conventional energy (NCE) resources such as methane (biogas) from renewable biomass feedstocks.

Renewable biomass energy has great potential in Ecuador because of the prodigious growth of vegetation in the tropical climate and the agrarian economy which produces vast amounts of livestock wastes and other organic waste residues. Presently, GOE is planning and implementing NCE projects which provide assistance to the poor and which are component parts of integrated rural and urban development programs.

The report presented herein is an assessment of existing biogas demonstration facilities and the biogas energy development program in Ecuador. It is a follow-on report to that of a USAID Mission Ecuador (AID/E) energy assessment team which evaluated the biomass energy resource base in studies performed in late 1980. In that report, Beinhart and Henry (1981) recommended that a separate study be made of biogas energy since a program of demonstration plants already exists, and the technology is available to develop this dispersed energy resource throughout the country.

Following the biomass energy resource assessment, discussions were held

between AID/E and the Instituto Nacional de Energia (INE) regarding Ecuador's biogas program, as well as between AID/E and the Office of Energy of USAID Washington (USAID). INE expressed interest in obtaining an experienced biogas energy team to examine their present demonstration biogas program and to make recommendations regarding future development of biogas energy in Ecuador.

Accordingly, the request of AID/E and GOE was transmitted to USAID, who forwarded it to the USDA-FS Bioresources Team which provides such services under terms of a USAID/USDA PASA. The authors of this report were then contracted by this group to conduct the biogas assessment, and visited Ecuador in March 1981.

After an initial one-day briefing in Washington, D.C. with members of the USDA-FS Bioresources Team, including both authors of the previous study, the team was directed to proceed with the following general objectives:

1. Inspect the biogas digesters installed by INE at different locations throughout the country, evaluating each in terms of design, construction, capacity and suitability for its intended function.
2. Examine the cellulosic feedstocks used to charge each digester, evaluating these materials in terms of available quantities, continuity of supplies, completeness of digestion, and potential for adding new feedstocks to achieve a broader base of supplies.
3. Assess to the degree possible the quality of biogas produced by each digester, using the analytical results to interpret present operations and to recommend modifications if needed.

4. Determine the extent to which biogas from each generator is presently being utilized, and the efficiency with which it is conducted from the generator to the point of use.
5. Assess the status of applied research and university technical support now available, and recommend methods to strengthen these activities.
6. Analyze the economics of biogas production in Ecuador and prepare an evaluation of the economic feasibility.
7. Review the overall INE demonstration biogas program and prepare a set of comprehensive recommendations to ensure an efficient systems approach.
8. Present investigation findings to the appropriate officials of INE and AID/E before departing Ecuador.

The above scope of work was modified slightly as a result of discussions with representatives of INE and AID/E to include evaluations of the possibility of utilizing human wastes and wastewaters in the biogas program. Biogas facilities designed to include these wastes could improve sanitation as well as provide energy in both rural and urban areas. Additionally, it was requested that those conditions be delineated which would be of greatest importance in siting future biogas plants to ensure successful operations.

In carrying out this assignment the biogas energy team consulted with representatives of INE, other government agencies, educational institutions, AID/E, and the U.S. Peace Corps in Ecuador (PC/E) and other individuals associated with or interested in biogas energy. Field visits were made to operating biogas facilities and to those technical institutes which carry out research and development programs in biogas energy. These

meetings and site inspections are described in the report. A complete list of contacts made is given in Appendix A. A summary of field trips conducted is given in Appendix B.

SECTION 2

HISTORY OF BIOGAS ENERGY IN ECUADOR

Biogas as a renewable energy source in Ecuador began in 1974 as a PC/E effort. The first plant was constructed in Araque, near Otavalo in the Province of Imbabura. It was a rigid tank, floating gasholder, continuou feed design funded jointly by USAID and PC/E. The tank volume was $10m^3$ and ideally it produced over $5m^3$ of biogas/day from the nightly manure of 20 cattle. This digester, largely maintained for research purposes, did demonstrate the technical feasibility of biogas generation in rural Ecuador. Operation of this digester was eventually phased out when a second digester in nearby Iluman was constructed in 1976.

The Iluman digester, also funded by USAID and PC/E, was a fixed cover design and was significantly larger ($32m^3$). It was intended to provide cooking fuel and fertilizer to a large percentage of the surrounding community. At the present time, the capacity of the digester is under-utilized with considerably less than 20 cattle confined at night to supply the feed and only 9 families benefitting from the operation. The greatest difficulties at Iluman have always been social in nature.

Throughout 1978, seven smaller biogas units of generally less than $1m^3$ capacity were constructed at Quilanga, in the Province of Loja. These were again experimental units built by Peace Corps Volunteers (PCV's) as part of the development work of Programa Regional para del Desarrollo del Sur de Ecuador (PREDESUR), a southern Ecuador regional development agency, at their agricultural demonstration farm in Quilanga.

In addition to the anaerobic digestion process, the units demonstrated several solar heating arrangements and various materials of construction. For example, several units had panels above the digester that were opened during the daytime, allowing the sun to heat the unit from parabolic reflective surfaces, and then were closed at night, to contain the heat that had been collected. In other units, thermal syphoning of water heated in a solar collector, to heat the digester was demonstrated. One unit was operated at ambient temperatures as a control. Digester construction materials evaluated include concrete, brick, block, granite and ferro cement. Gasholder materials studied include zinc coated steel and ferro cement. These units were not maintained after the PCV's left in 1979.

Social as well as technical considerations were noted from operation of the initial biogas plants. Similar to the historical experiences in other countries the early biogas plants clearly showed that social concerns may often hinder biogas development in poor rural areas. With family digesters the principal concerns are high initial cost and labor intensive operating and maintenance requirements. One of the main objectives of the Quilanga project, therefore, was to determine those digester designs that minimized costs, yet maximized energy and fertilizer returns. In a community or cooperative biogas plant such as at Iluman individual families are concerned about how their contribution of wastes is measured and what share of the gas and effluent will be theirs. To complicate the situation, as the distance between the biogas plant and the point of use increases, it is more difficult to maintain gas pressure and families located further from the plant may not get their allotted share.

Before 1979, there was no established GOE organization to plan, coordinate

or promote activities in biogas. Biogas development was primarily part of a PC/E effort to experiment with the use of various small scale technologies to assist the poor in rural areas. In 1979 INE began to assess the feasibility of several renewable non-conventional energy sources in a program of energy planning on a national basis. Biogas was one of the renewable energy sources considered in the program in order to help meet the needs of rural communities. A main reason for this is that biogas works are especially applicable to tropical regions. Digester heating is not required and thus the system is more energy efficient and simpler to operate.

Cattle populations are an integral part of the rural environment, and therefore cattle manure was the renewable resource used in the early biogas plants because of its excellent fermentation characteristics. Biogas plants can also utilize organic wastes from piggeries, chicken farms, household toilets, food processing plants and crop residues, but these feedstocks were not evaluated in the initial digesters.

Recently, INE has begun to evaluate the feasibility of utilizing numerous waste feedstocks in three general sectors of the economy:

1) rural communities
2) commercial farms and industries
3) human wastes and wastewaters

This program demands that many digester designs be investigated, both small and large scale, to meet the site specific requirements of the application in question.

Late in 1979, PC/E also began looking at biogas more seriously when it

was decided to make a developmental impact in the energy sector. Until then, PC/E had no overall biogas plan for the country and involvement consisted only of a number of isolated experimental efforts (Araque, Iluman, Quilanga). Since the initial experience of PC/E in appropriate rural energy technologies was with biogas, it was easiest to begin a program in this area.

In 1980, ten PCV's were requested to develop small scale biogas projects throughout the country. Eight PCV's were trained in biogas digester theory, design, and construction in the summer of 1980 in response to this request. These volunteers arrived in Ecuador in August 1980, were taught the language and further oriented for their first 3 months, and were then assigned to various field locations to begin work in biogas plant construction late in the year. As of March 1981, six PCV's remain with the program and are responsible for the operation of six new continuous feed digesters of various designs and one reconstructed digester at Quilanga. The PC/E program is now seen as providing direct support to the larger INE program as it relates specifically to the relatively poor rural areas.

The PVC's are directed by Napoleon Cevallos, biogas program manager for PC/E, who works closely with Ing. Yanez of INE. Their primary role is to provide construction supervision, start-up assistance, and technical advice as necessary. The lack of qualified persons at newly constructed facilities, however, at times results in significant efforts by PCV's to maintain daily operation.

The Organizacion Latino Americana de Energia (OLADE), headquartered in Quito, has focused a part of its effort on NCE and has funded pilot biogas projects in a number of Latin American countries, including Ecuador. In 1980,

OLADE constructed a biogas demonstration project consisting of two small batch digesters at Valle Hermoso, near Santo Domingo, in cooperation with the Pichincha Provincial Council.

A description of the present GOE biogas research and development program is given in the following section. Section 4 is devoted entirely to describing each of the presently operating digesters mentioned above (excluding Araque and the early Quilanga digesters).

SECTION 3

PRESENT GOE BIOGAS PROGRAMS

INE INSTITUTIONAL ROLE

The National Development Plan of Ecuador recognizes the great importance of energy in future development of the country, as well as the need for greater coordination of this sector. It has targeted almost one third of the Plan's investment for the 1980-84 period into energy programs. In summary, the Plan states that "the objective of energy policy is to meet internal demand, develop hydro-electric resources, promote other non-conventional sources and optimize the use of biomass fuels. All these activities have the purpose of increasing and diversifying the supply of energy resources and reducing Ecuador's dependence on petroleum".

Within this framework the Plan recognizes INE as the national agency for coordinating and planning the energy sector in accordance with policies formulated by GOE. INE would also serve as the agency for promoting NCE, to bring about more diversified and rational use of Ecuador's energy resources. INE was created in September, 1978 through Executive Order No. 2888-A and came into functional operation in May, 1979 with the assignment of a budget and Executive Director. At that time INE was assigned the following specific responsibilities:

A. Planning

"Prepare a National Energy plan with programs for the short, medium, and long term, taking into consideration the rationalization of energy use, and maintenance of the ecological balance. Such a plan will incorporate an inventory and evaluation of the country's energy resources."

B. Coordination

"Periodically evaluate results of the execution of energy development plans and propose necessary adjustments. Formulate technology production, transfer, and utilization policies within the energy sector and coordinate and orient the activities of all organizations in the energy area."

C. Alternative Energy

"Elaborate energy policy alternatives in accordance with the country's development and the international situation. Organize, coordinate and promote the investigation and use of alternative energy."

D. Information Exchange

"Maintain technical-scientific interrelation with similar national and international institutions, and provide assistance to institutions and companies, public as well as private, in the energy sector."

An institutional model of the GOE Structure relating to NCE is shown in Figure 3.1.

In general INE is responsible for analyzing the energy sector, including investigating NCE, and making recommendations to agencies such as MRNE and CONADE. It is engaged more in planning and working with other groups than in direct implementation, although limited implementation by INE in cooperation with other agencies is sometimes undertaken in areas such as biogas. Regional development, and local and private organizations will be able to draw on INE for technical and financial support to carry out NCE demonstrations and other energy related projects. The National Council for Science and Technology (CONACYT) will rely on INE for the

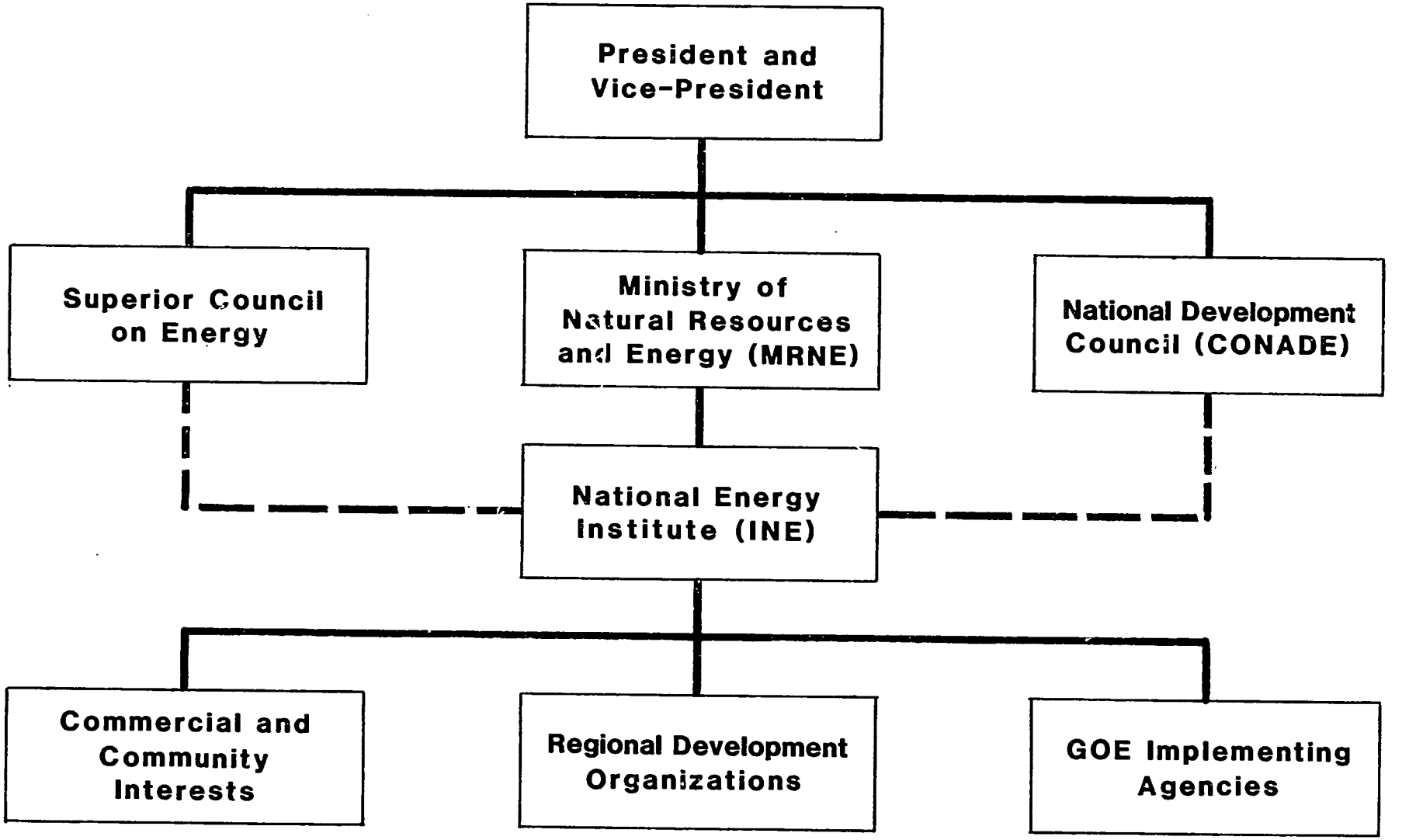

FIGURE 3.1

STRUCTURE OF GOE RELATING TO NON-CONVENTIONAL ENERGY PLANNING AND DEVELOPMENT

formulation and execution of energy programs as it relates to broader national science and technology objectives. INE has further been asked to prepare the agenda for the Superior Council on Energy and act as its working secretariat thus having the opportunity to directly influence strategies developed at the highest levels of government.

INE presently has approximately 25 employees, including an appointed Director, more than 12 professionals (mostly engineers), technical assistants, and people performing administrative and secretarial work. The staff is organized into three operating divisions: alternative energy, energy planning and conservation, and an information center. An important program within the planning division was the determination of detailed national energy use balances, including conservation potential, which are leading to future policy making. The division of alternative energy, which is involved in the investigation of NCE, including biogas, has the largest share of INE's staff, with an on-board strength of six full-time professionals.

INE BIOGAS PROGRAM

INE has developed a planned and systematic approach to evaluating biogas as an NCE source. The ultimate goal is widespread acceptance of biogas systems where applicable in Ecuador. INE has already implemented construction of eight biogas plants of various sizes and designs throughout Ecuador for demonstration and research purposes. This program has been partially supported by various agencies, including Volunteers in Technical Assistance (VITA) and AID/E. Moreover, PC/E collaborates in this program with six volunteers providing full time technical expertise in the field. All biogas activities are under the direction of Ing. Eduardo Yanez, who devotes a

major portion of his work effort to the biogas program. As an indication of Ing. Yanez's interest and abilities in biogas, he has recently developed a simple and low cost device which can measure on-site the methane content of biogas produced at digesters.

For each digester built under INE's direction, a portion of the required materials and accessories, and gasholders have generally been provided depending on each particular situation. The units now operating range in size from 0.11 to $40m^3$ of reactor volume and demonstrate some four distinct designs - floating cover, fixed cover and plug flow, which are continuous feed units, and batch units. It is anticipated that these initial biogas demonstration activities can lead to a more comprehensive demonstration program that INE will administer to promote the acceptance and growth of biogas energy into appropriate rural and urban areas. The training of both agency and community persons is crucial to the success of this program. INE is now collecting technical, social and economic information at most existing digesters to plan for future program needs.

Particular demonstration projects being considered are biogas plants utilizing human wastes and municipal wastewaters from a town or village sewer system. Such facilities would not only provide methane gas for use in remote regions or for sale, but would also permit sanitary disposal of raw sewage that may otherwise pollute various waters, many used by small farmers in rural areas. However, it is recognized that a number of technical concerns will have to be addressed before a substantial biogas program based on human wastes and municipal wastewaters can be implemented. Other digesters planned that may have substantial potential impact would be

larger scaled units at commercial farms and industries, for example, poultry farms. These opportunities are discussed later in the report.

To help identify biogas systems that are most applicable to Ecuador's needs, INE has funded research and development efforts at the Escuela Superior Politecnica del Litoral (ESPOL) in Guayaquil. The ESPOL program consists primarily of research and development with a number of experimental digesters, using various animal waste and plant residues as feedstocks. To date, all digesters in the country rely substantially on animal manure. Use of the biogas has been investigated especially as fuel for engines. Presently, there are three digesters and many 5 gal benchscale units available for testing purposes. In addition a prototype plant is expected to be constructed this year in a rural area near Guayaquil.

In an unrelated program at Escuela Politecnica Nacional (EPN) in Quito, a concrete fixed cover design digester was recently operated for about 4 months for research purposes, primarily for the determination of optimum retention time at ambient temperatures. The research was conducted by a graduate student as the subject of a thesis. INE is aware of this research, and in support has made information available on its presently operating demonstration digester projects.

REGIONAL DEVELOPMENT AGENCIES

Seven of the new digesters in INE's program were constructed in cooperation with various regional development agencies. The overall biogas program is planned and managed by INE, although implementation of digester construction is generally through contracts with the regional agencies and sometimes the owners. The role of each supporting agency varies to a degree but often it is to provide local building materials and transportation

in the site vicinity. The owner normally supplies the necessary labor. Upon completion of the digester, the owner or beneficiary of the biogas and fertilizer is expected to provide for the daily operation and maintenance. As mentioned, in a few cases, agencies such as PREDESUR and OLADE have initiated their own biogas projects.

Table 3.1, a summary of existing demonstration digesters in Ecuador, identifies the regional development agencies presently involved in biogas works. It further lists the beneficiary, approximate cost, and theoretical gas production associated with each facility.

Ministereo de Agricultura y Ganaeria (MAG), or the Ministry of Agriculture and Cattle, is a large top-level GOE organization responsible for all aspects of agricultural development within the country. Centro de Rehabilitacion de Manabi (CRM), or the Center for the Rehabilitation of Manabi, a public agency, provides support to projects that benefit the economic needs of the Province of Manabi. Fundacion Ecuatoriana de Desarrollo (FED) is a private development foundation. Instituto Nacional de Colonizacion de la Region Amazonica Ecuatoriana (INCRAE), or the National Institute for the Colonization of the Amazon Region of Ecuador, is another public agency responsible for development in the Amazon (or Oriente) region. PREDESUR, ESPOL, EPN and OLADE have been previously described. Figure 3.2 shows the location of each digester listed in Table 3.1 and further discussed in Section 4.

TABLE 3.1
SUMMARY OF EXISTING DEMONSTRATION DIGESTERS

Project	Regional Agency	Beneficiary	Approx. Cost (S/.)[1]	Theoretical Gas Production (m^3/day)
Guamani	-	Family L. Lopez, 8 persons	43,000	6
San Cristobal	MAG	Family S. Espinosa, 8 persons	15,000[2]	2
Las Delicias	CRM	Family N. Mejia, 6 persons	25,000	3
El Pueblito	CRM	Family E. Rodriguez, 11 persons	28,000	3
Santa Elena	FED	Cooperative Lourdes, Cheese Production	74,000	15
Rancho Ronald	MAG/4F	Rancho Ronald, Cheese Production	80,000	15
Aguayacu	INCRAE	Commune Aguayacu, 30 native persons	29,000	3
Quilanga	PREDESUR	Experimental Farm, PREDESUR	10,000[3]	0.3
ESPOL	ESPOL	ESPOL-INE	4,000[4]	0.4
EPN	EPN	EPN	8,000	0.5
Valle Hermoso	OLADE	Non-resident owner	150,000 (2 units)	4
Iluman	-	Community, 9 families	120,000[5]	12

(1) S/.1.00 = $0.0333 (March 1981)
(2) Includes S/3,000 for latrine and concrete stable floor
(3) Reconstructed unit
(4) Floating cover continuous unit (total of three units at ESPOL)
(5) Includes stable, solar hot water, greenhouse, fish culture, agriculture and nutrition/health projects

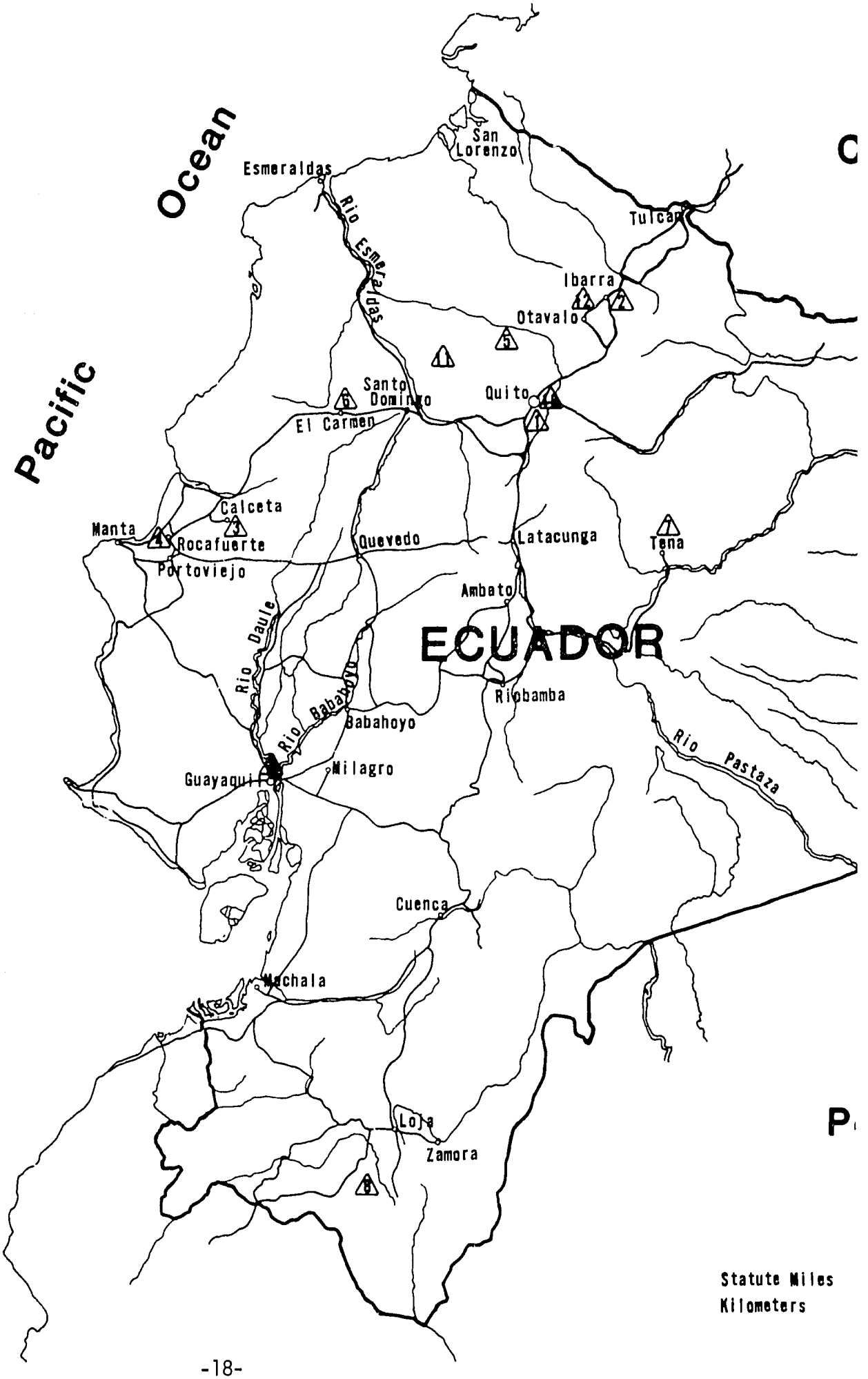
Pacific
Ocean
San Lorenzo
Esmeraldas
Rio Esmeraldas
Tulcan
Ibarra
Otavalo
Quito
Santo Domingo
El Carmen
Calceta
Manta
Rocafuerte
Portoviejo
Quevedo
Latacunga
Tena
Ambato
ECUADOR
Rio Daule
Rio Babahoyo
Riobamba
Babahoyo
Rio Pastaza
Milagro
Guayaquil
Cuenca
Machala
Loja
Zamora
Statute Miles
Kilometers

18

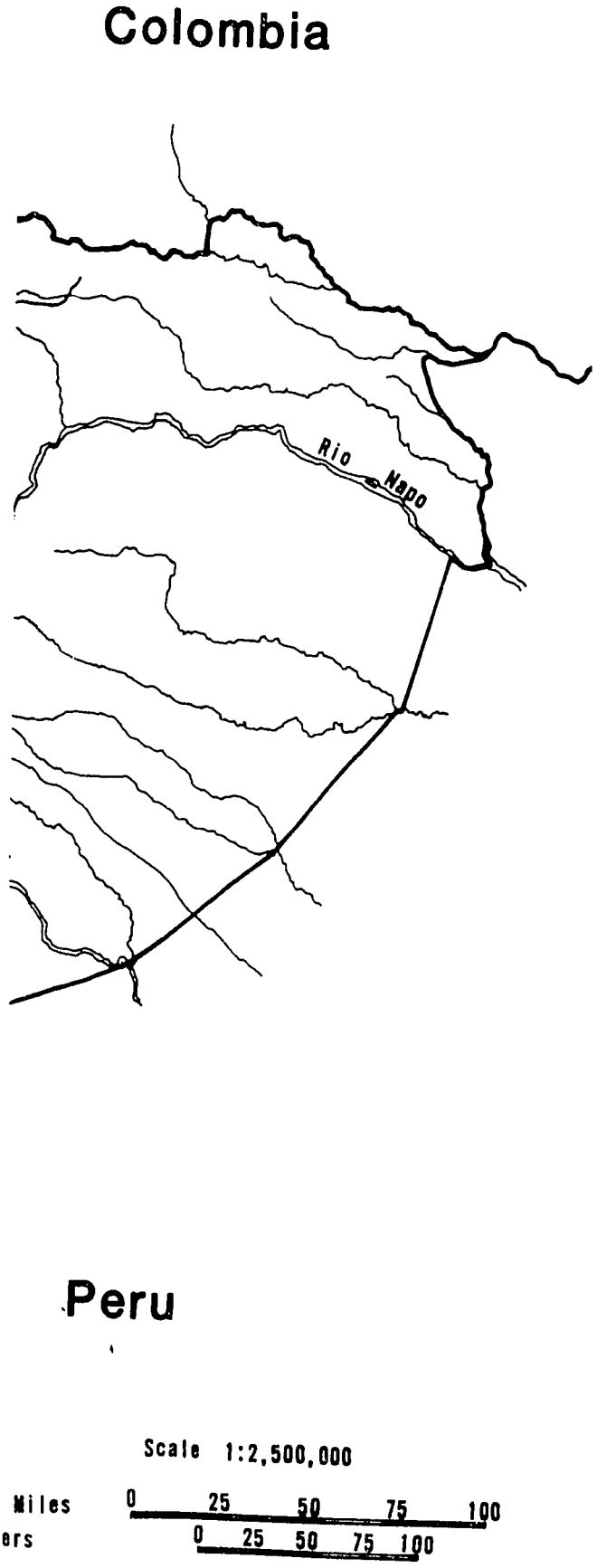

FIGURE 3.2

LOCATION OF EXISTING DEMONSTRATION DIGESTERS

REPUBLIC OF ECUADOR

1. GUAMANI
2. SAN CRISTOBAL
3. LAS DELICIAS
4. EL PUEBLITO
5. SANTA ELENA
6. RANCHO RONALD
7. AGUAYACU
8. QUILANGA
9. ESPOL
10. EPN
11. VALLE HERMOSO
12. ILUMAN

SECTION 4

ASSESSMENT OF EXISTING FACILITIES

INTRODUCTION

In this section, a technical evaluation of existing digester facilities in Ecuador is presented. For each digester project, the following topics are addresssed.

1. description
2. operation
3. problem areas
4. recommendations

There are 12 digester facilities included in this assessment, nine of which are under the direction of INE. One digester facility was built by EPN (at the Politecnica), another by OLADE (Valle Hermoso), and a third by PC/E (Iluman). Seven INE digesters are either attended or monitored by Peace Corps volunteers. The operation of two INE built digesters is now the responsibility of local concerns - a dairy farm in Guamani and the MAG/4F demonstration farm at Rancho Ronald. Included in the assessment is a biogas project partially funded by INE and administered by Escuela Superior Politecnica del Litoral (ESPOL) in Guayaquil.

A summary of the biogas facilities assessed was given in Table 3.1 and their locations shown in Figure 3.2. Basic technical data are included in Tables 4.1 through 4.12, and schematic diagrams of digesters and gas holders are given in Figures 4.1 through 4.10. Representative photographs of the digesters visited are shown in Appendix B.

The digesters and their locations are listed below.

BIOGAS DIGESTERS ASSESSED

Project	Location
Guamani	S of Quito, Pichincha
San Cristobal	Near Ibarra, Imbabura
Las Delicias	W of Calceta, Manabi
El Pueblito	N of Rocafuerte, Manabi
Santa Elena	NW of Nanegalito, Pichincha
Rancho Ronald	Near El Carmen, Pichincha
Aguayacu	Near Tena, Napo
Quilanga	SW of Loja, Loja
ESPOL	Guayaquil, Guayas
EPN	Quito, Pichincha
Valle Hermoso	N of Santo Domingo, Pichincha
Iluman	Near Otavalo, Imbabura

Most of the digesters recently built have been of the floating cover or Indian design. Steel gasholders of several standard designs are normally manufactured under INE's direction. The primary advantage of this design over a fixed cover is the constant gas pressure that is maintained, resulting in more uniform burning. Another advantage is that there is less of a problem with gas leaks. One particular fixed cover design employed in Ecuador (Iluman) leaks an unaccountable amount of gas above a pressure of 3" (≈ 8 cm) water column. Disadvantages of floating steel gasholders are their high cost, tendency to corrode rapidly, and also their poor insulating qualities. More heat is lost through the relatively thin metal sheet compared to masonry fixed covers commonly used in other countries such as China.

Three distinct sizes of digesters were observed in Ecuador. The smallest digesters produce less than 2 m^3/day of biogas and can be classified as experimental units. These are located at the Politecnicas (ESPOL and EPN) and at Quilanga. The middle range of digesters produce between 2 and 10 m^3/day and can be considered as family units, typically requiring 50% of the manure from between 3 and 15 cattle. The largest units are designed to produce in excess of 10 m^3/day and are either located at larger dairy farms (Santa Elena, Rancho Ronald) or serve more than one family (Iluman).

In the following pages both technical and social aspects of digester design and operation are considered. Specific recommendations for improving each digester demonstration project are included. Program recommendations of a more general nature are discussed in Section 8. An economic evaluation of typical biogas facilities in Ecuador is presented in Appendix C.

GUAMANI

1. Description

The digester at Guamani is located on a private dairy farm 14 km S of Quito, in the Province of Pichincha. It is a floating cover design with a volume of 16 m^3 and utilizes cattle manure. The digester facility was constructed in 1980 with funds provided by INE. Labor was provided by the owner. Early in the project, a student in Chemical Engineering from the Universidad Central del Ecuador, Miguel Penaherrera, was involved in monitoring the digester's performance, mostly gas analysis. At present, operations are performed entirely by the farm. As of late March 1981 the unit was operational but was experiencing significant gas handling problems. A more

detailed description of the digester is given in Table 4.1. Drawings of the digester and gasholder are shown in Figures 4.1 and 4.2, respectively.

2. Operation

The amount of cattle manure is greatly in excess of the digester's capacity. The manure from 400 head is available,although only about 300 kg/day (diluted 1/1) is added to the digester. To load, manure is shoveled into a wheelbarrow and transported 50 m to the digester mixing tank. The effluent flows by gravity to fields nearby but reaches only a very small area. Gas is collected in a steel gasholder and piped to the kitchen where 2 gas stoves for cooking are used. On the day of our visit, 25 March 1981, the gas lines were plugged with water. Sand bags were placed on the gasholder to increase the gas pressure and keep as much gas as possible in storage. No water trap had been installed in the gas line.

3. Problem Areas

Since no water trap had been installed, the system was constantly experiencing interruptions in gas flow to the stoves. Furthermore, the gas stoves themselves were not equipped with an air intake valve for pre-mixing of gas and air, and for regulation of the burner flame to maximize heat output.

The long distance between manure source and digester is a potential operational problem. Also, effluent use as fertilizer is limited by the minimal gravity distribution available. If a larger scale system had been designed, these operational aspects would require more careful considerations.

TABLE 4.1
DIGESTER GUAMANI

Location	14 km S of Quito, Province of Pichincha
Beneficiary	Dairy farm of Sr. Luis Lopez
Peace Corps Volunteer	None
Regional Agency	None
Altitude	2800 m
Average Temperature	$14^{o}C$
Digester Type	Floating cover, continuous process
Construction	Concrete foundation, brick and mortar walls, steel gasholder
Volume of Tank	16 m^3
Volume of Gas Cover	3.5 m^3
Gas Production	6 m^3/day (theoretical)
Feedstock	Cattle manure
# Animals, Persons	≃ 400
Quantity Loaded, % Total	350 kg/day (design), <5%
Retention Time	45 days (design)
Gas Use	Cooking, 2 burners
Effluent Use	Gravity flow to fields as fertilizer
Cost of Materials Cost of Labor	S/43,000 ($1,430)
Estimated Maintenance	-
Estimated Life	10-15 yrs

FIGURE 4.1
DIGESTER GUAMANI

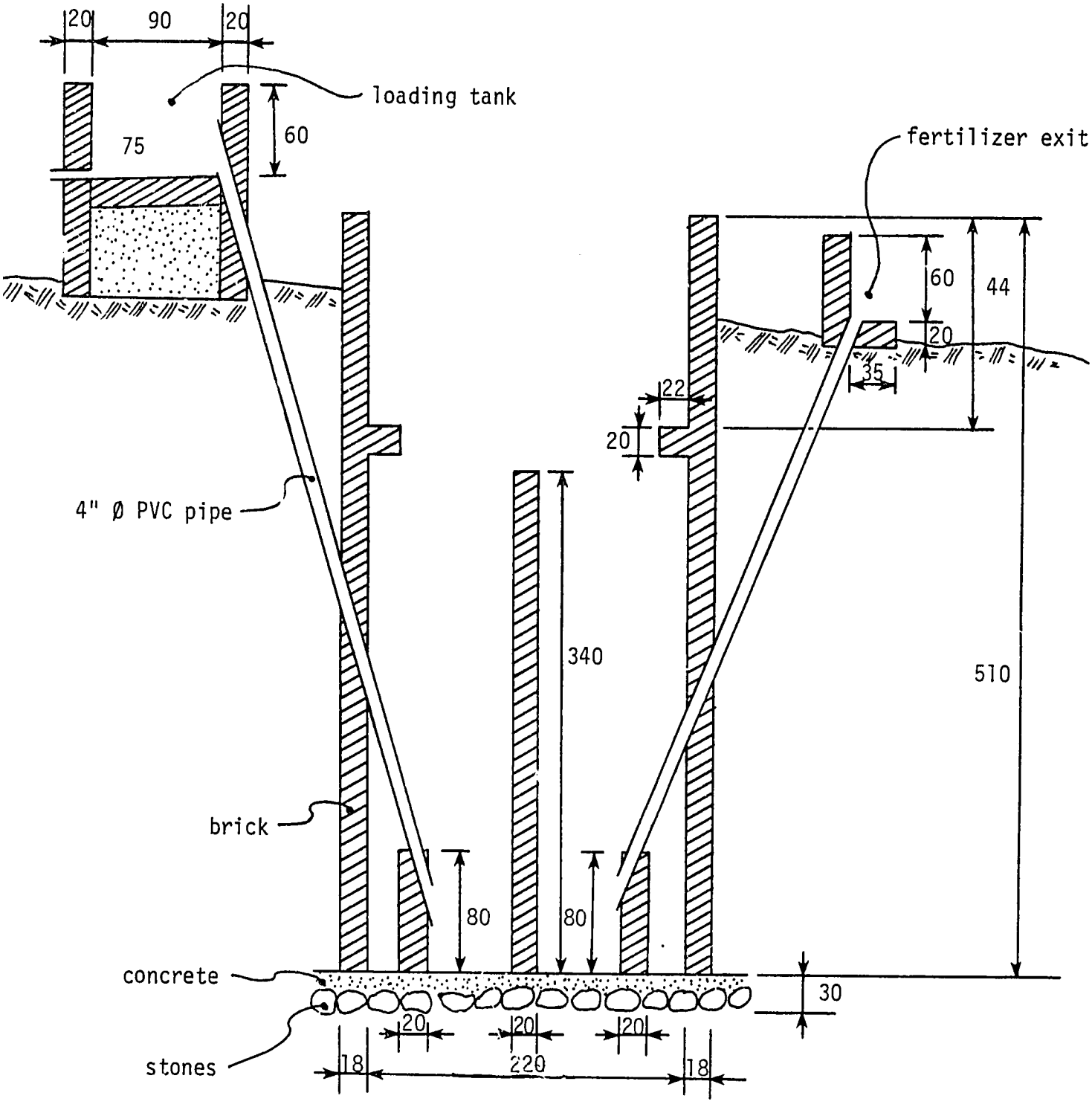

all dimensions in cm
except as noted

FIGURE 4.2
3.5m³ GASHOLDER

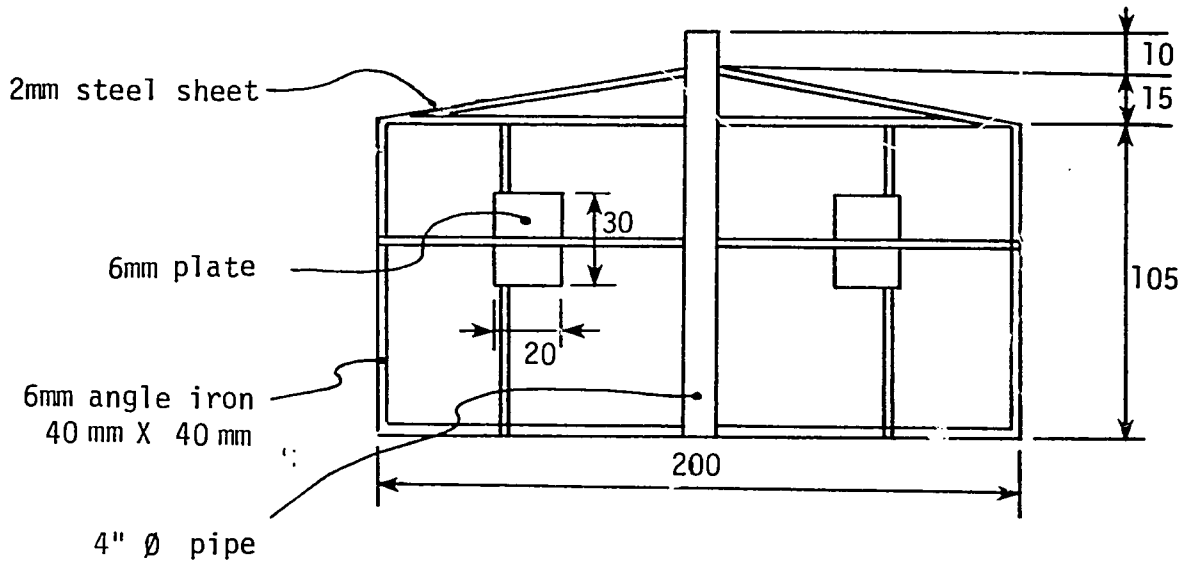

All dimensions in cm except as noted

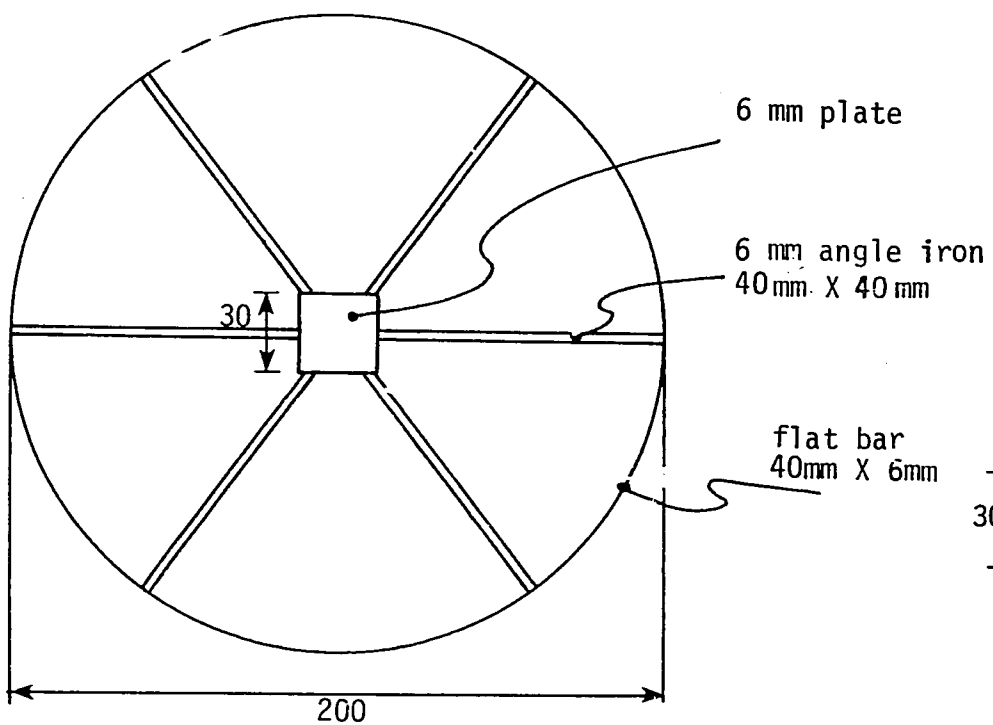

GUIDE

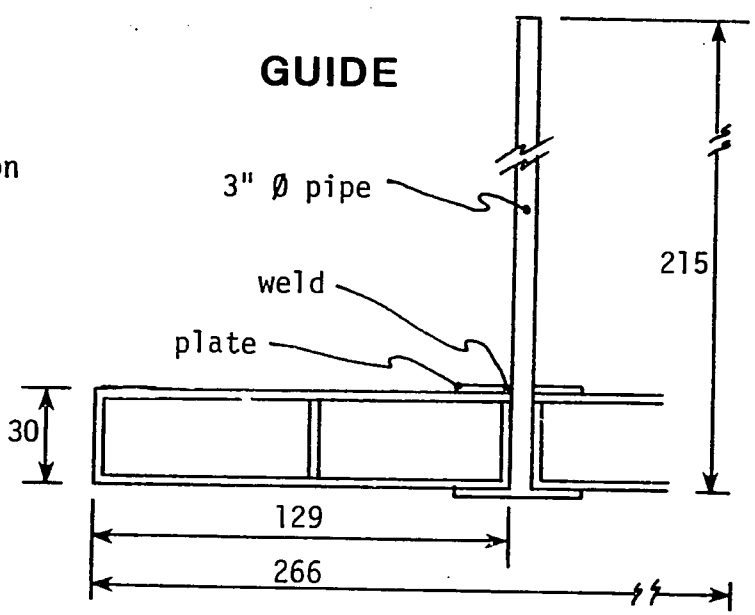

4. Recommendations

a) Install a water trap to solve the problem of blocked gas lines.

b) Modify the stoves to include effective pre-mix of the gas and air before ignition for optimum burner efficiency.

c) Study the feasibility of enlarging digester operations at Guamani including analyses of alternative uses for the gas, and improved loading and effluent distribution systems.

SAN CRISTOBAL

1. Description

This digester serves a single family of 8 persons and is located near Ibarra, in the Province of Imbabura. It is a fixed cover, plug flow design, with a volume of 5.5 m^3, and is unique in Ecuador, being the first such design attempted. The digester facility was constructed in December 1980 with funds provided by INE and includes latrine and stable floor projects. MAG has assisted with the transportation of some materials. Labor was provided by the owner and a PCV, who has been involved in this project since its inception. The digester has been in operation since February 1981. A more detailed description of the digester is given in Table 4.2, and a drawing of it is shown in Figure 4.3.

2. Operation

Cattle are tethered near the digester, manure is collected and deposited in the loading tank, and latrine wastes pass directly into the digester inlet. This is the smallest family digester in Ecuador, although it is also the least costly, not requiring manufacture of a

TABLE 4.2
DIGESTER SAN CRISTOBAL

Location	Near Ibarra, Province of Imbabura
Beneficiary	Family of Sr. Sixto Espinosa
Peace Corps Volunteer	Keith Kline
Regional Agency	Ministereo de Agricultura y Ganaderia (MAG) Zone #5
Altitude	2450 m
Average Temperature	$17^{o}C$
Digester Type	Fixed cover, plug flow
Construction	Concrete (w/clay) foundation, brick and clay walls, (3) 55 gal drums cut in half for fixed cover
Volume of Tank	5.5 m^3 (includes gas space)
Volume of Gas Cover	NA (stored in inner tubes)
Gas Production	1.8 m^3 (theoretical)
Feedstock	Cattle manure, human waste
# Animals, Persons	4 cattle, 2 calves, 8 persons
Quantity Loaded, % Total	60-100 kg/day, 50%
Retention Time	50-80 days
Gas Use	Cooking, 1 burner
Effluent Use	Gravity flow to fields as fertilizer
Cost of Materials	S/13,500 ($450), includes S/3,000 for latrine and concrete stable floor
Cost of Labor	≈ S/4,500 ($150)
Estimated Maintenance	- (yearly: paint cover, cleanout solids)
Estimated Life	5-10 yrs

FIGURE 4.3
DIGESTER SAN CRISTOBAL

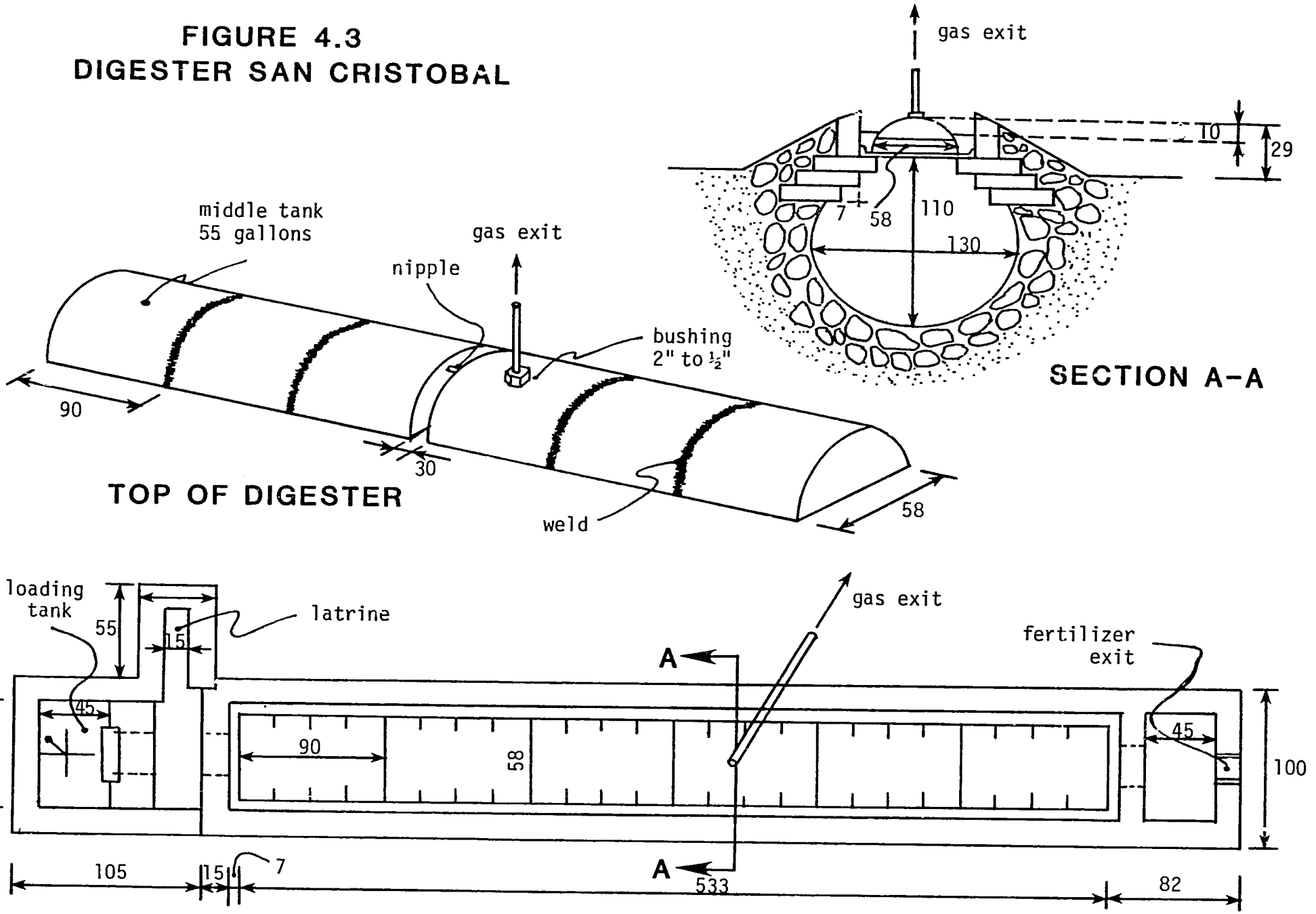

all dimensions in cm
except as noted

gasholder. The design incorporates 55 gal drums for a cover and truck inner tubes for gas storage. Effluent flows by gravity to a section of the fields for fertilizer and the gas is used for cooking.

To maintain sufficient gas pressure in the supply to the stove, weights are used to compress the inner tubes, which can be removed with counterweights when not needed. Without the weights, 2" (5 cm) of water column is developed; with them, 5" (13 cm) is achievable. Gas produced is used for cooking 4-5 hours/day, directly replacing wood use which was becoming increasingly difficult for this family to obtain.

Access to the digester contents by sampling tubes is also provided in this design at points 1/3 and 2/3 along the digester's length to later monitor for the presence of pathogenic organisms as a result of increased latrine use.

3. Problem Areas

The major concern at San Cristobal is the lack of sufficient gas storage. MAG, contracted to supply 4 inner tubes, has delivered none, and 2 inner tubes, each 0.4 m^3, have been acquired from other sources. Since 0.8 m^3 is not enough storage capacity to hold the gas produced over a 20 hour period (while not cooking) gas has been leaking around the cover regularly since operations began. Furthermore, only about 1.1 m^3 is available for cooking over a 4 hour period (storage and production) which is insufficient most of the time.

A lesser concern at the present time is the working life of the inner tubes. Questions on possible rubber fatigue or decomposition in contact with biogas have been expressed by the PCV.

There is also a potential problem with excessive scum buildup at the liquid-gas interface of the digester, thus limiting the effective digester volume and inhibiting gas removal.

4. Recommendations

a) Obtain two more inner tubes of about 0.4 m^3 capacity as soon as possible to eliminate gas leakage and provide more gas to the household for use.

b) Investigate sources of potential information on inner tube storage applications. Monitor the useful life of the existing inner tubes employed for future reference.

c) Ensure that manures are properly diluted to minimize the problem of scum formation associated with an overly diluted feed mixture.

LAS DELICIAS

1. Description

This digester serves a single family of 6 persons and is located 4 km W of Calceta in the Province of Manabi. It is a floating cover design with a volume of 8.4 m^3 and utilizes cattle manure. The digester facility was constructed in January 1981 with funds provided by INE. CRM provided some materials including transportation to the site location. Labor was provided by the owner and a PCV, who has been involved in this project since its inception. The digester has been in operation since March 1981. A more detailed description of the digester is given in Table 4.3. Drawings of the digester and gasholder are shown in Figures 4.4 and 4.5, respectively.

TABLE 4.3
DIGESTER LAS DELICIAS

Location	4 km W of Calceta, Province of Manabi
Beneficiary	Family of Sr. Nelson Mejia
Peace Corps Volunteer	H. Clark Worthley
Regional Agency	Centro de Rehabilitacion de Manabi (CRM)
Altitude	300 m
Average Temperature	$26^{o}C$
Digester Type	Floating cover, continuous process
Construction	Concrete foundation, brick and mortar walls, 4" PVC delivery and exit pipes, ½" Ø plastic gas-lines, 2 mm steel gasholder
Volume of Tank	$8.4\ m^3$
Volume of Gas Cover	$2.7\ m^3$
Gas Production	$3\ m^3$/day (theoretical)
Feedstock	Cattle manure
# Animals, Persons	14 cattle, 8 calves
Quantity Loaded, % Total	260 kg/day, < 50%
Retention Time	30-40 days
Gas Use	Cooking, 1 burner
Effluent Use	Pumped from pit to fields ≈ 1 X per week
Cost of Materials	S/20,000 ($670)
Cost of Labor	≈ S/5,000 ($170)
Estimated Maintenance	-
Estimated Life	10-15 yrs

FIGURE 4.4
DIGESTER LAS DELICIAS

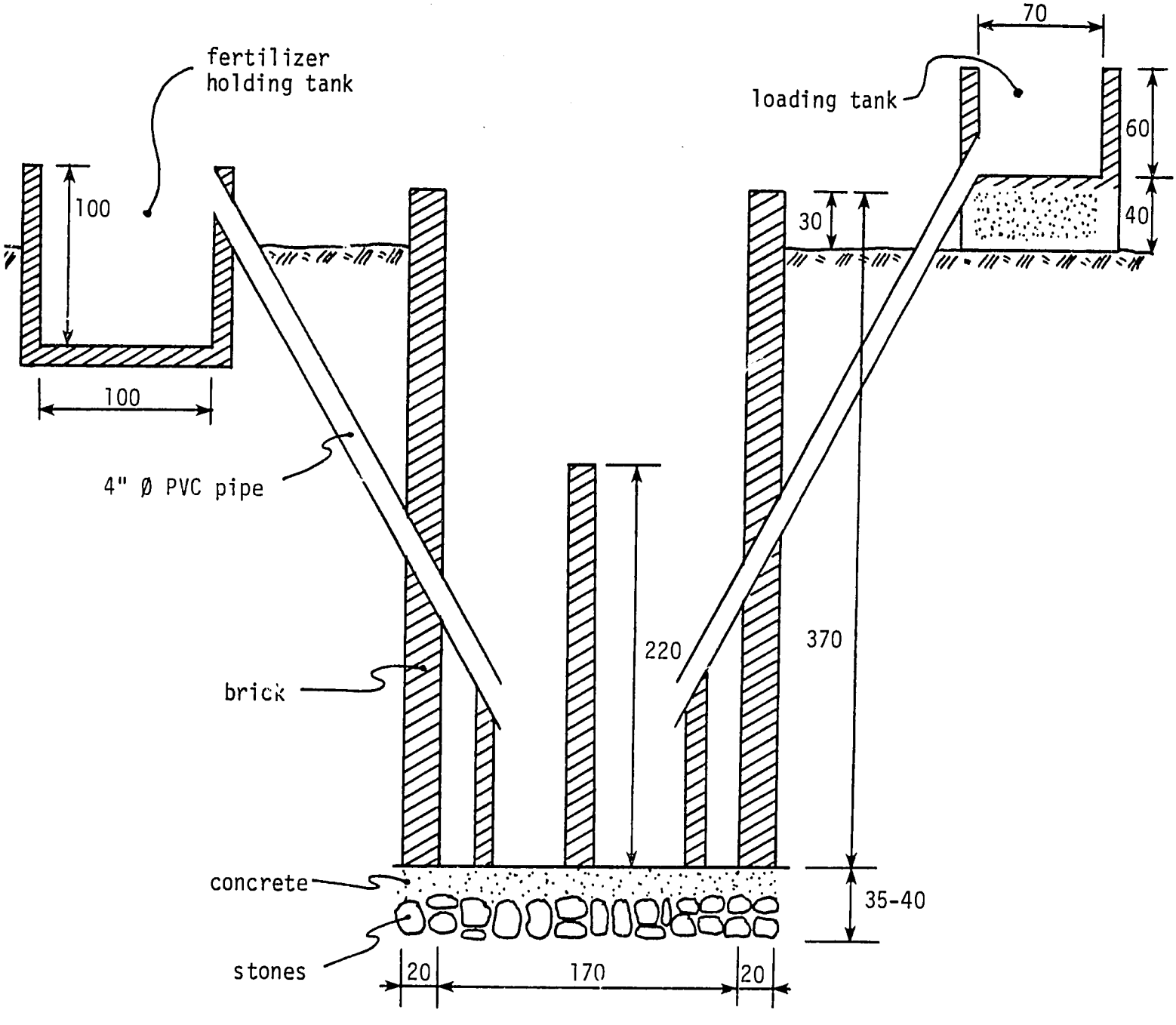

all dimensions in cm
except as noted

FIGURE 4.5
2.7m³ GASHOLDER

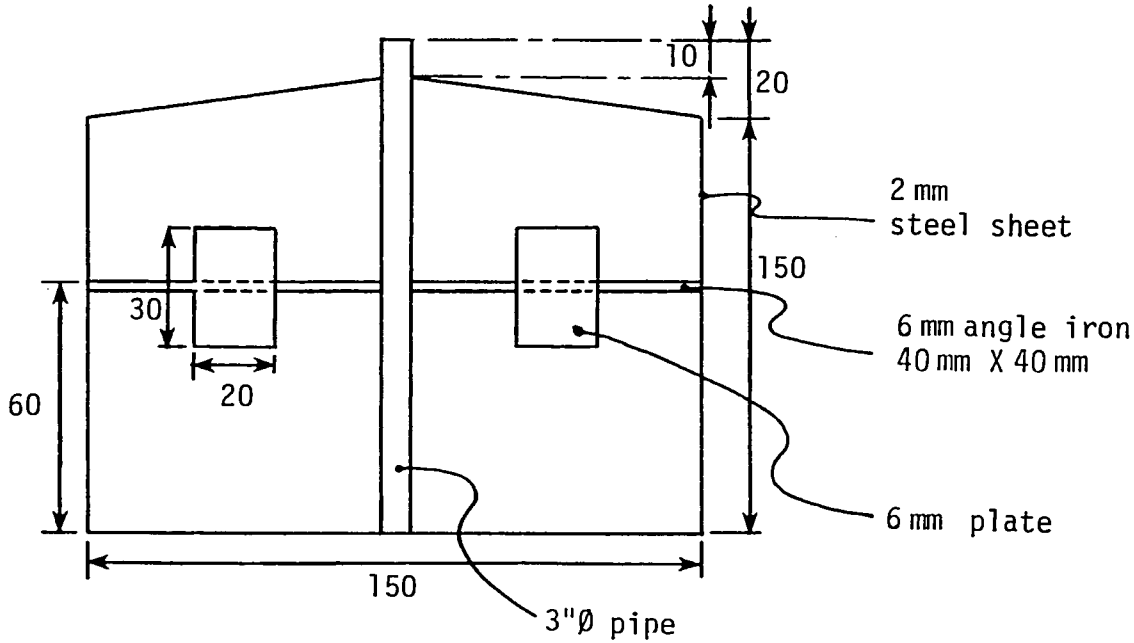

All dimensions in cm
except as noted

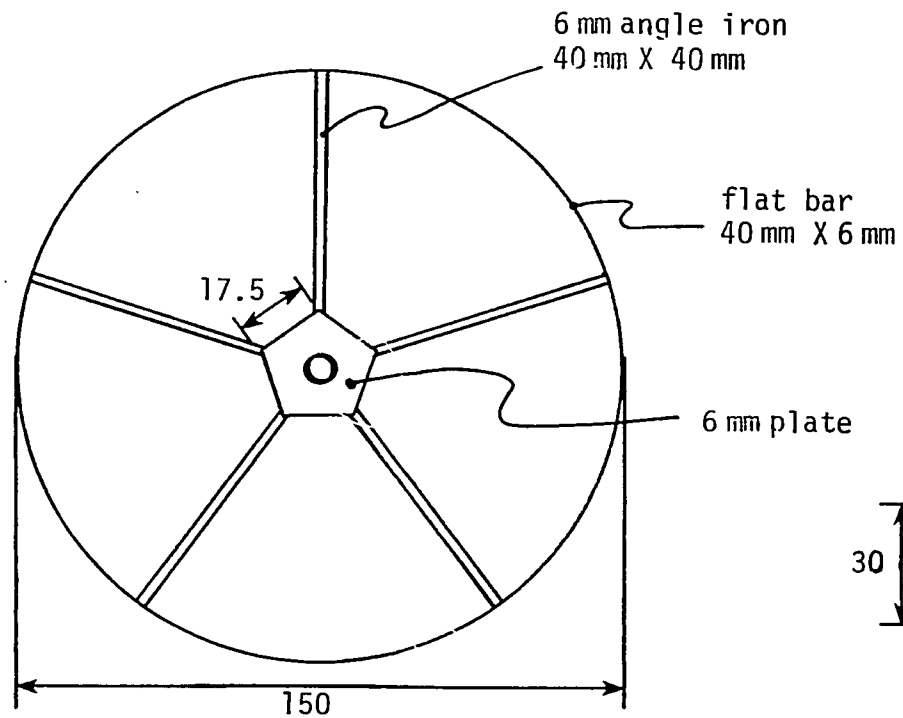

GUIDE

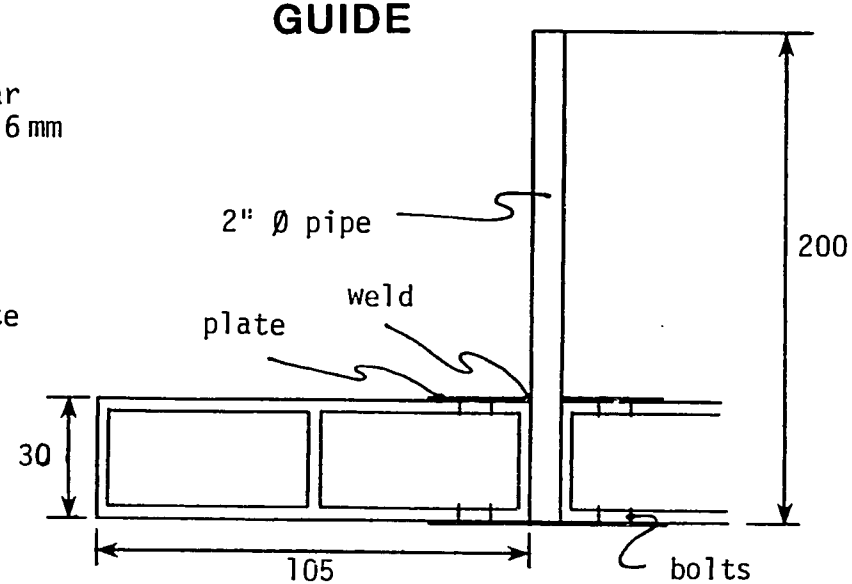

2. Operation

Cattle are confined approximately 16 hours/day and manure is taken directly from the corral and added to the loading tank. Effluent flows into a holding tank where it is pumped to the fields and coffee trees for fertilizer about once per week. Gas is collected in a steel gasholder and piped to the kitchen for cooking. The gasholder used at Las Delicias is made of 2 mm sheet metal, 150 cm in diameter, 2.7 m^3 in volume and is identical to those used at two other facilities as part of INE's attempts to standardize digester designs. This particular gasholder is sized for the single family unit. The digester at Las Delicias is particularly simple to operate.

3. Problem Areas

No major problems were observed at Las Delicias. A minor operational concern is that during the rainy season it is difficult to collect manure from the earthen corral and sometimes the digester may not be loaded. Also, it was noticed that the owner could easily afford all the wood needed for cooking and that wood was actually preferred over gas in most cooking situations.

4. Recommendations

a) Maintain efforts to load every day. This may require providing necessary drainage ditches and/or more sheltered areas to keep the corral relatively dry.

b) Improve gas dependability and burner efficiency to the degree that more gas is used by the owner in preference to wood.

c) Evaluate the effectiveness of effluent pumping operations at Las Delicias and for possible application at other sites.

EL PUEBLITO

1. Description

This digester serves a single family of 11 persons and is located 8 km N of Rocafuerte in the Province of Manabi. It is a floating cover design with a volume of 8.7 m^3 and treats cattle manure. The digester facility was constructed in January 1981 with funds provided by INE. CRM provided some materials including transportation to the site. Labor was provided by the owner and a PCV, who has been involved in this project since its inception. The digester has been in operation since March 1981. A more detailed description of the digester is given in Table 4.4. Drawings of the digester and gasholder are shown in Figures 4.6 and 4.5, respectively. The lower portion of the tank was made wider to shorten the overall height to avoid the high water table at 3 m depth. The upper tank diameter was maintained at 170 cm to allow use of standard 150 cm gasholders.

2. Operation

Cattle are confined approximately 16 hours/day and manure is taken directly from the corral and added to the loading tank. Effluent flows by gravity to a section of the fields for fertilizer. Gas is collected in a 150 cm diameter, 2.7 m^3 capacity steel gasholder and piped to the kitchen for cooking. This gasholder is INE's standard design for 3-4 m^3/day single family digesters. This unit, like others similar to it, is easy to operate when carefully sited.

3. Problem Areas

No major problems were observed at El Pueblito. A minor operational concern is the labor intensiveness of loading both water and manure.

TABLE 4.4
DIGESTER EL PUEBLITO

Location	8 km N of Rocafuerte, Province of Manabi
Beneficiary	Family of Sr. Eligio Rodriguez
Peace Corps Volunteer	H. Clark Worthley
Regional Agency	Centro de Rehabilitacion de Manabi (CRM)
Altitude	100 m
Average Temperature	$25^{o}C$
Digester Type	Floating cover, continuous process
Construction	Concrete foundation, brick and mortar walls with steel reinforcing rod, 4"Ø PVC delivery and exit pipes, steel gasholder
Volume of Tank	$8.7\ m^3$
Volume of Gas Cover	$2.7\ m^3$
Gas Production	$3\ m^3$/day (theoretical)
Feedstock	Cattle manure
# Animals, Persons	8
Quantity Loaded, % Total	< 230 kg/day, > 60%
Retention Time	35-45 days
Gas Use	Cooking, 1 burner
Effluent Use	Gravity flow to fields as fertilizer
Cost of Materials	S/23,000 ($770)
Cost of Labor	≈ S/5,000 ($170)
Estimated Maintenance	-
Estimated Life	10-15 yrs

FIGURE 4.6
DIGESTER EL PUEBLITO

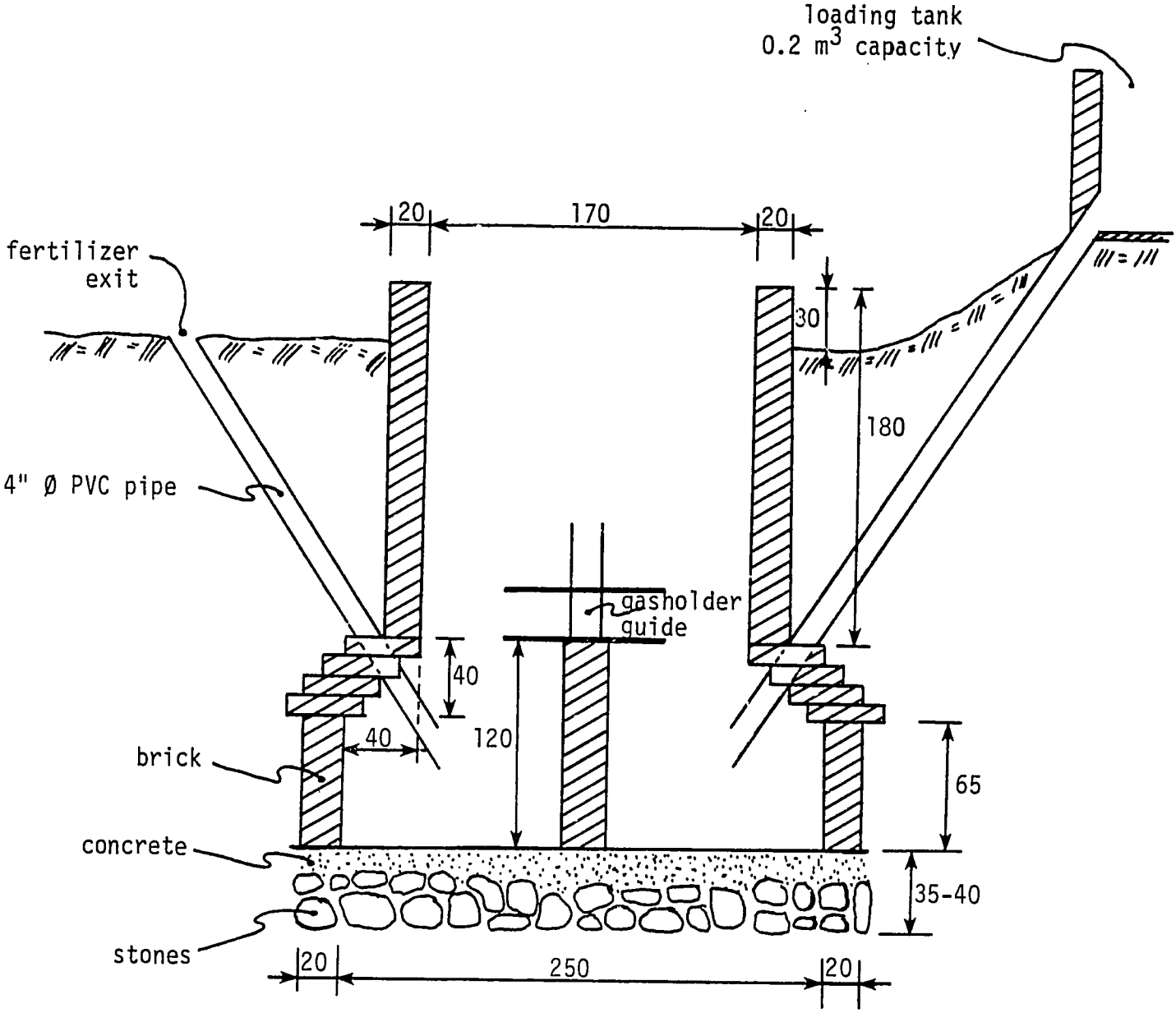

all dimensions in cm
except as noted

The availability of water on a continuous basis had been questioned. The present source of water, a small surface channel, may dry up during the dry season (August-September). Also, water is presently carried in buckets from the channel to the loading tank (about 20 m), a slight inconvenience. A notable deficiency was the lack of a suitable wheelbarrow for gathering and transporting manure to the loading tank.

4. Recommendations

a) Secure a source of water for digester loading throughout the entire year. If the surface water supply now used were to dry up, provisions must be made for an alternate domestic source.

b) As discussed with the PCV, a small tank could be installed near the digester for holding several days or more of loading water requirements, and a hand pump could be obtained for filling it. (A pump has been requested from CRM with no positive response as of yet).

c) Improve loading operations by obtaining a wheelbarrow. The PCV has already considered doing this.

SANTA ELENA

1. Description

The digester serving the Cooperativa Lourdes near Santa Elena is located 10 km NW of Nanegalito in the Province of Pichincha. This cooperative, like many in Ecuador, began as a savings and loan group but is now involved in community developments including the dairy farm and cheese factory at the subject location. It is a floating

cover design with a volume of 40 m^3, and treats mostly cattle with some pig manure. The digester was constructed in January 1981 with funds provided by INE. Fundacion Ecuatoriana de Desarrollo (FED), a private development agency, has supported the project with the transportation of materials. Labor was provided by the cooperative and a PCV, who has been involved in this project since its inception. The digester began limited operations in March 1981. A more detailed description of the digester is given in Table 4.5. Drawings of the digester and gasholder are shown in Figures 4.7 and 4.8, respectively.

2. Operation

The number of cattle fluctuates at the farm but is generally less than the number needed to meet the design loading rate of 1000 kg/day (diluted 1/1). Furthermore, this rate assumes that all animals will be confined during the night which is presently not the case. As of late March 1981 manure is collected from about 10 milking cows during about 2-1/2 hours/day of confinement, 15 non-milking cattle during confinement in the evenings, and 7 pigs that are always confined. The amount of diluted manure loaded, then, is roughly only 400 kg/day and consequently the digester is significantly underutilized. It is expected that the herd size and the average time of confinement will be increased eventually.

Manure is scraped and shoveled from the concrete floor of the confinement areas into a wheelbarrow and transported approximately 5 m to the digester mixing tank. Effluent flows by gravity to only a limited area of the fields as fertilizer. A pair of oxen is available to haul the effluent longer distances. Washdown wastewater also flows

TABLE 4.5
DIGESTER SANTA ELENA

Location	10 km NW of Nanegalito, Province of Pichincha
Beneficiary	Cooperative Lourdes
Peace Corps Volunteer	Daniel Sherrard
Regional Agency	Fundacion Ecuatoriana de Desarrollo (FED)
Altitude	1600 m
Average Temperature	$19^{o}C$
Digester Type	Floating cover, continuous process.
Construction	Concrete foundation, brick and mortar walls and mixing tank, 6" Ø PVC delivery and exit pipes, 3 mm steel gasholder
Volume of Tank	40.5 m^3
Volume of Gas Cover	8.8 m^3
Gas Production	15 m^3/day (theoretical)
Feedstock	Cattle manure, pig manure
# Animals, Persons	25-40+ cattle, 7 pigs
Quantity Loaded, % Total	1000 kg/day (design), > 50%
Retention Time	40 days (design)
Gas Use	Heating for milk pasteurizing (design)
Effluent Use	Gravity flow or haul to fields as fertilizer (design)
Cost of Materials	S/59,000 ($1,960)
Cost of Labor	≈ S/15,000 ($500)
Estimated Maintenance	-
Estimated Life	10-15 yrs

FIGURE 4.7
DIGESTER SANTA ELENA

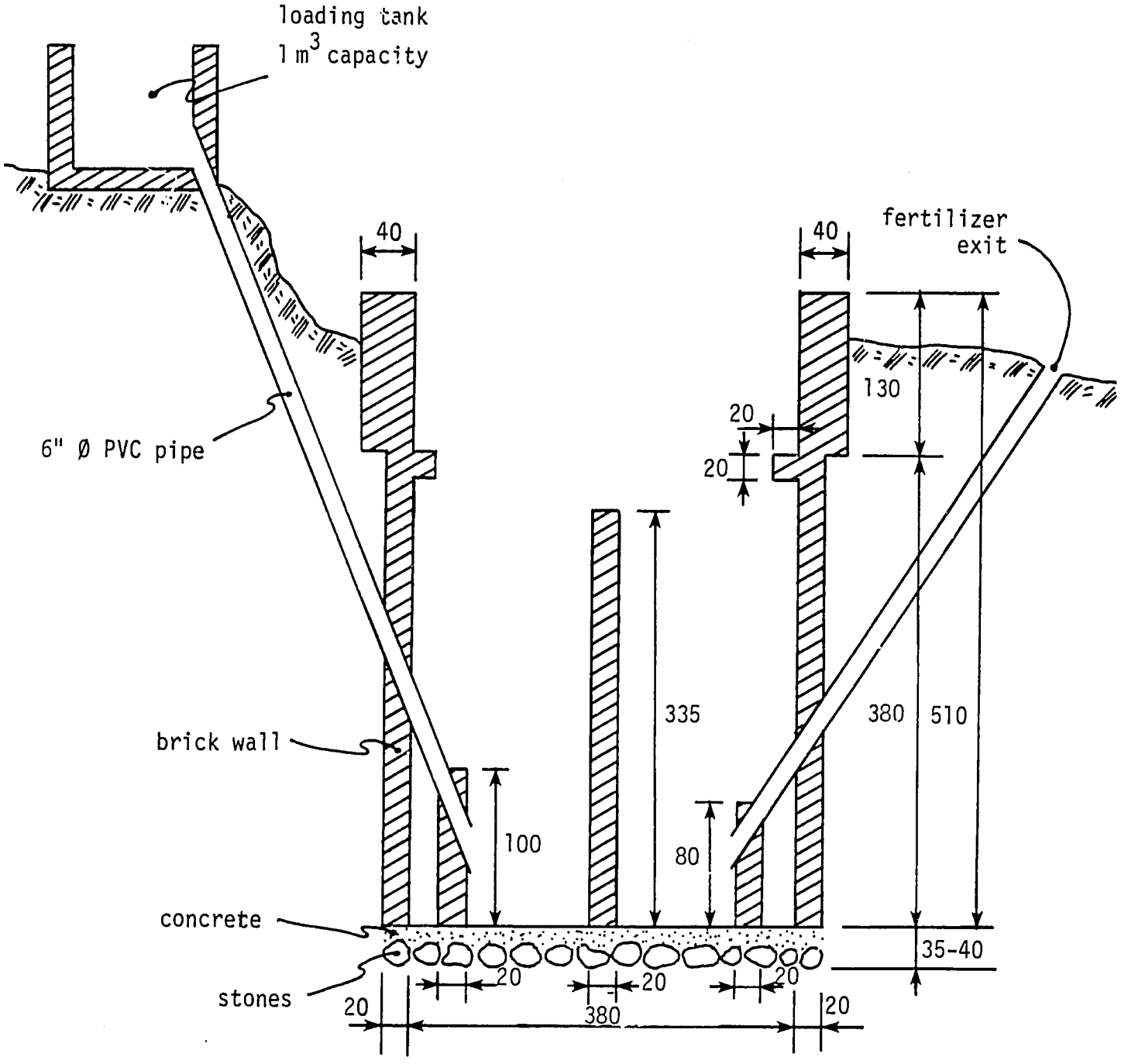

all dimensions in cm
except as noted

FIGURE 4.8
8.8m^3 GASHOLDER

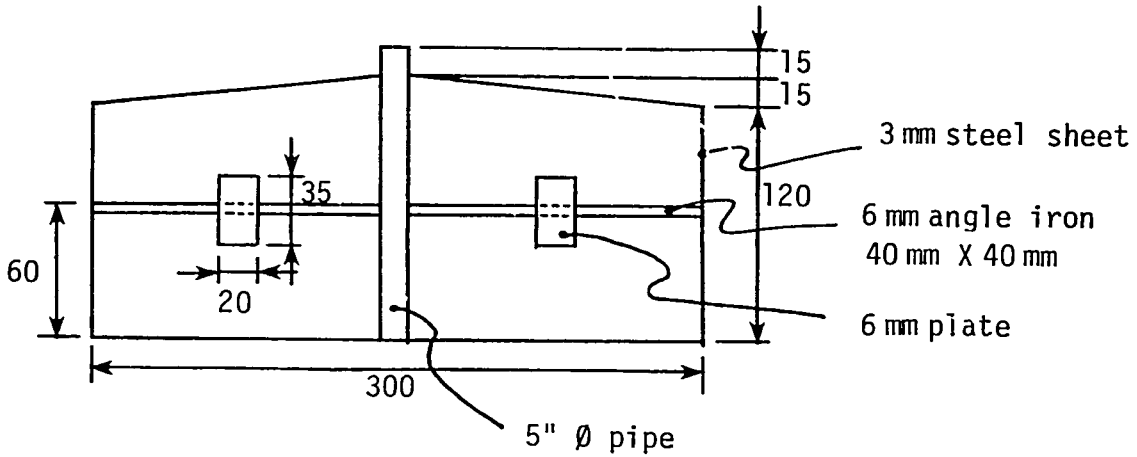

All dimensions in cm
except as noted

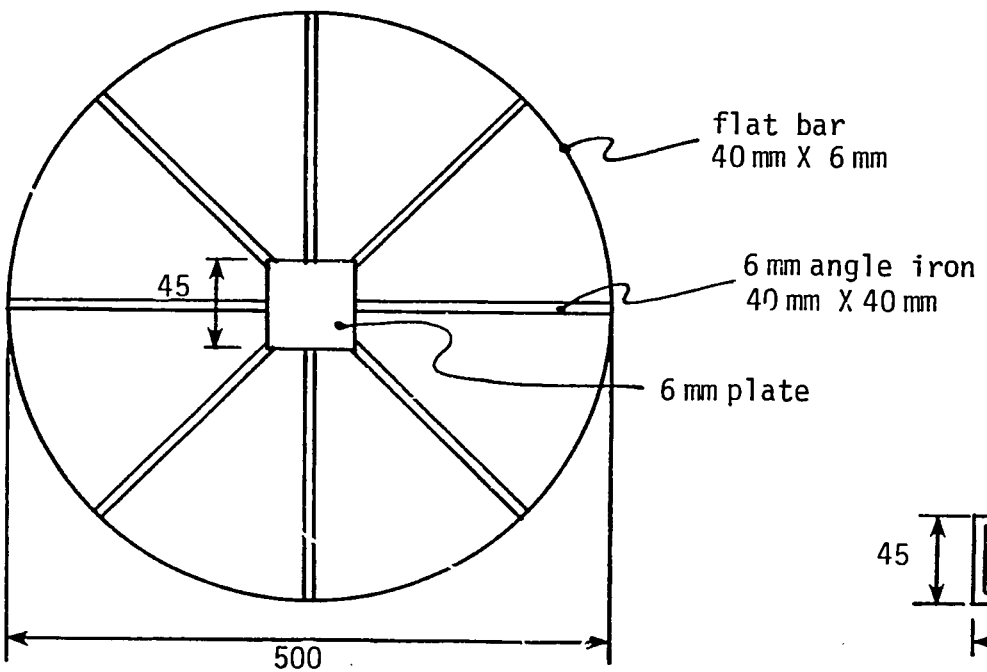

GUIDE

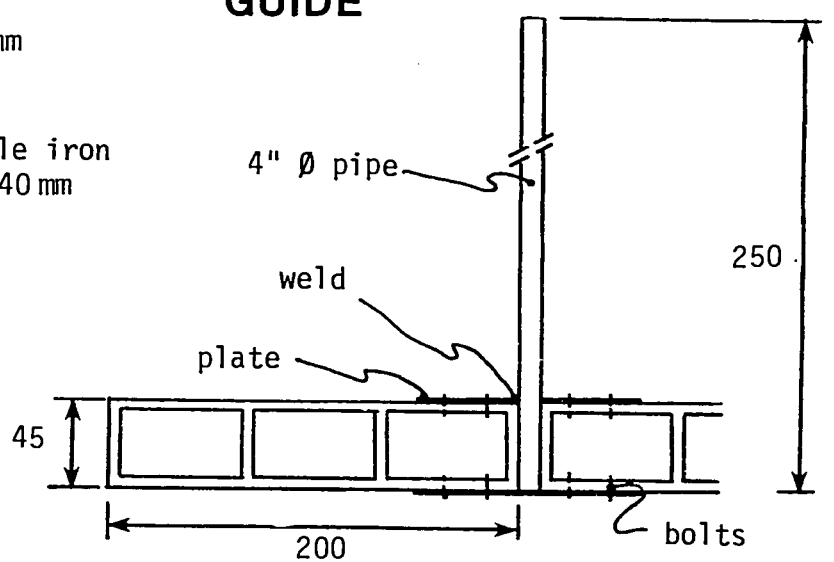

by gravity to a small holding pit and then to the fields. The gas is collected in a 500 cm diameter 8.8 m^3 capacity steel gasholder and is planned to be utilized in the pasteurization process for heating. This gasholder is INE's standard design for 15 m^3/day commercial digesters. Gas pressure generated is approximately 12 cm of water column and the length of gas piping required is about 100 m. This line is not yet installed.

3. Problem Areas

The principal concern at Santa Elena is to get the digester operating at or near full capacity. If the herd size is not increased or the cattle are not confined during nights and more manure not loaded into the digester, the benefits of the system, including its demonstration value, will be significantly compromised. It is likely that this concern is already being addressed.

Sufficient gas storage capacity may be a problem if the daily demand for gas occurs over only a few hours or less time. Effluent handling may also become a problem since limited land area can be served by gravity flow. Hauling liquid effluent is time and labor intensive.

A final concern at Santa Elena is the smooth transition from newly constructed facility to integrated farm systems operation. At this time a milking person helps with loading, but for increased digester operations, further cooperative efforts will be required.

4. Recommendations

a) Develop and implement a plan for bringing the Santa Elena digester up to capacity. This will require that responsibilities for all

aspects of operation and maintenance be identified and assigned.

b) Investigate alternative scenarios for effluent use, including solids/liquids separation, hauling, and pumping operations.

c) Install a line to transport the gas from the digester to the point of use with attention given to pressure loss, water removal, corrosion, and demand requirements.

d) For future projects, special attention must be given to siting and sizing. Operating requirements associated with loading, gas use and effluent use are directly dependent on the siting and sizing of interrelated system components.

RANCHO RONALD

1. Description

The digester facility at Rancho Ronald is located near El Carmen, 29 km west of Santo Domingo in the Province of Pichincha. It is a floating cover design with a volume of 40 m^3 and will utilize cattle manure. The digester was constructed in January 1981 with funds provided by both INE and MAG/4F, which maintains the facility, although it was not operating as of March 1981. Labor was also provided by MAG/4F. There are plans at the site to pasteurize the milk produced and to make cheese which is the intended use for the gas. There are also plans to divert the effluent by gravity to experimental fish ponds located nearby. A PCV is working on the fish ponds but none is assigned to the digester. A more detailed description of the digester is given in Table 4.6. Drawings of the digester and gasholder are shown in Figures 4.9 and 4.8, respectively.

TABLE 4.6
DIGESTER RANCHO RONALD

Location	Near El Carmen, Province of Pichincha
Beneficiary	Ministereo de Agricultura y Ganaderia (MAG) /Fundacion 4F
Peace Corps Volunteer	None
Regional Agency	MAG/4F
Altitude	350 m
Average Temperature	25°C
Digester Type	Floating cover, continuous process
Construction	Concrete foundation, concrete block and mortar walls, 4" Ø PVC delivery and exit pipes, steel gasholder
Volume of Tank	40.5 m^3
Volume of Gas Cover	8.8 m^3
Gas Production	15 m^3/day (theoretical)
Feedstock	Cattle manure
# Animals, Persons	20-25 milking, 15-25 calves
Quantity Loaded, % Total	1000 kg/day (design), > 60%
Retention Time	40 days (design)
Gas Use	Heating for milk pasteurizing (design)
Effluent Use	Possible feeding of fish ponds (design)
Cost of Materials	S/65,000 ($2,160)
Cost of Labor	≈ S/15,000 ($500)
Estimated Maintenance	-
Estimated Life	10-15 yrs

FIGURE 4.9
DIGESTER RANCHO RONALD

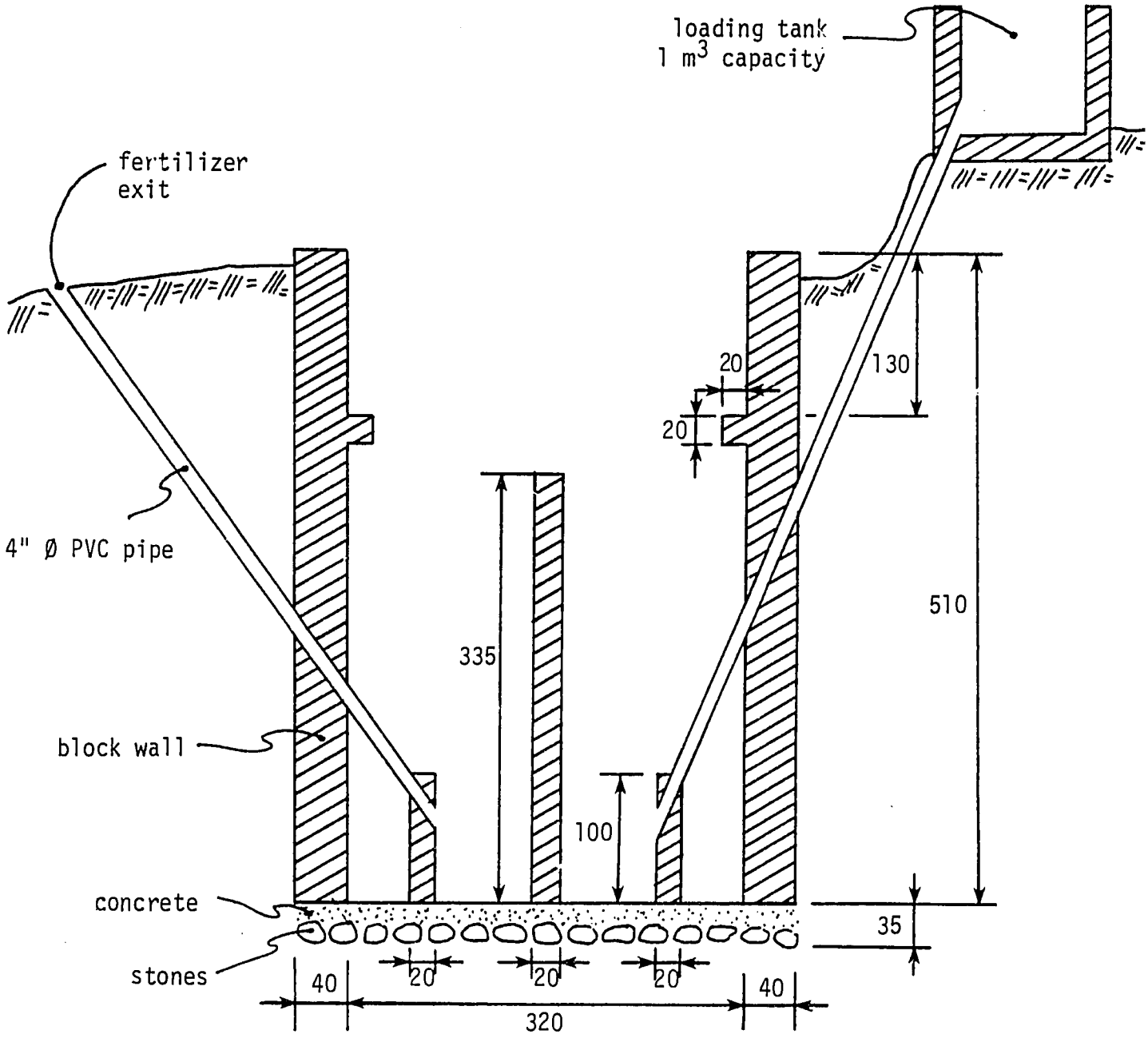

all dimensions in cm
except as noted

2. Operation

There are presently 20-25 dairy cows at Rancho Ronald which are confined only during milking, about 3 hours per day. There are also 15-25 calves that are confined at various times. It is estimated that the amount of manure actually available from this level of operations may fall short of the design feed rate of 1000 kg/day.

To load, manure must be shoveled from the concrete floor stable into a wheelbarrow and transported about 5 m to the mixing tank up a ramp.

The gas line is yet to be installed. It must travel about 40 m to the pasteurization process. The effluent is diverted to a gully below the digester but may eventually be used to fertilize several fish ponds already constructed at the site.

3. Problem Areas

The single most critical problem is that the system is not yet operating due to incomplete gas and effluent handling systems. No other potential problems were noted. The farm appears to have the means necessary to operate the overall facility but is simply behind schedule in performing the required work.

4. Recommendations

a) Complete all work required to make the digester facility operational. This requires that the gas line be installed and also that specific plans be made for effective utilization of the gas. This necessarily involves a startup of the pasteurization process.

b) Investigate the feasibility of diverting a portion of or all of the effluent to the existing fish ponds. If all effluent cannot be

utilized in this manner, evaluate the possibility of using effluent as fertilizer in other ways.

The present alternative of simple diversion to a gully without productive recovery of the fertilizer value should be selected only if no other economical uses for the effluent exist.

c) After regular loading has begun, initially monitor loading rates to determine if the digester is achieving its design capacity.

AGUAYACU

1. Description

This digester serves the native community of Aguayacu near Tena in the Province of Napo. It is a floating cover design with a volume of 8.3 m^3 and utilizes cattle manure. The digester facility was constructed in February 1981 with funds provided by INE. INCRAE has provided some materials and transportation near the site. Labor has been provided by the beneficiaries and a PCV, who has been involved in the project since its inception. The digester began operation in March 1981 although no experience with using the gas was reported at that time. A more detailed description of the digester is given in Table 4.7. Drawings of the original digester design and gasholder are shown in Figures 4.10 and 4.5, respectively. Digester construction was later modified similar to El Pueblito (Figure 4.6) to minimize contact with the exceptionally high water table.

2. Operation

Presently, cattle are not confined, although the Napo Provincial Council

TABLE 4.7
DIGESTER AGUAYACU

Location	Near Tena, Province of Napo
Beneficiary	Community of Aguayacu
Peace Corps Volunteer	David C. Bradford
Regional Agency	Instituto Nacional de Colonizacion de la Region Amazonica Ecuatoriana (INCRAE)
Altitude	450 m
Average Temperature	$25^{o}C$
Digester Type	Floating cover, continuous process
Construction	Concrete foundation, concrete block and mortar walls, 4" Ø PVC delivery pipe, steel gasholder
Volume of Tank	8.3 m^3
Volume of Gas Cover	2.7 m^3
Gas Production	3 m^3/day (theoretical)
Feedstock	Cattle manure, human waste
# Animals, Persons	20 cattle, 1+ persons
Quantity Loaded, % Total	250 kg/day, 30%
Retention Time	35 days
Gas Use	Cooking, 1 medium burner
Effluent Use	Liquids to algae pond, dried solids to field
Cost of Materials	S/24,000 ($800)
Cost of Labor	≈ S/5,000 ($170)
Estimated Maintenance	S/500 per year for materials (repaint cover after 3 yrs, cleanout after 2 yrs)
Estimated Life	10-15 years

FIGURE 4.10
DIGESTER AGUAYACU

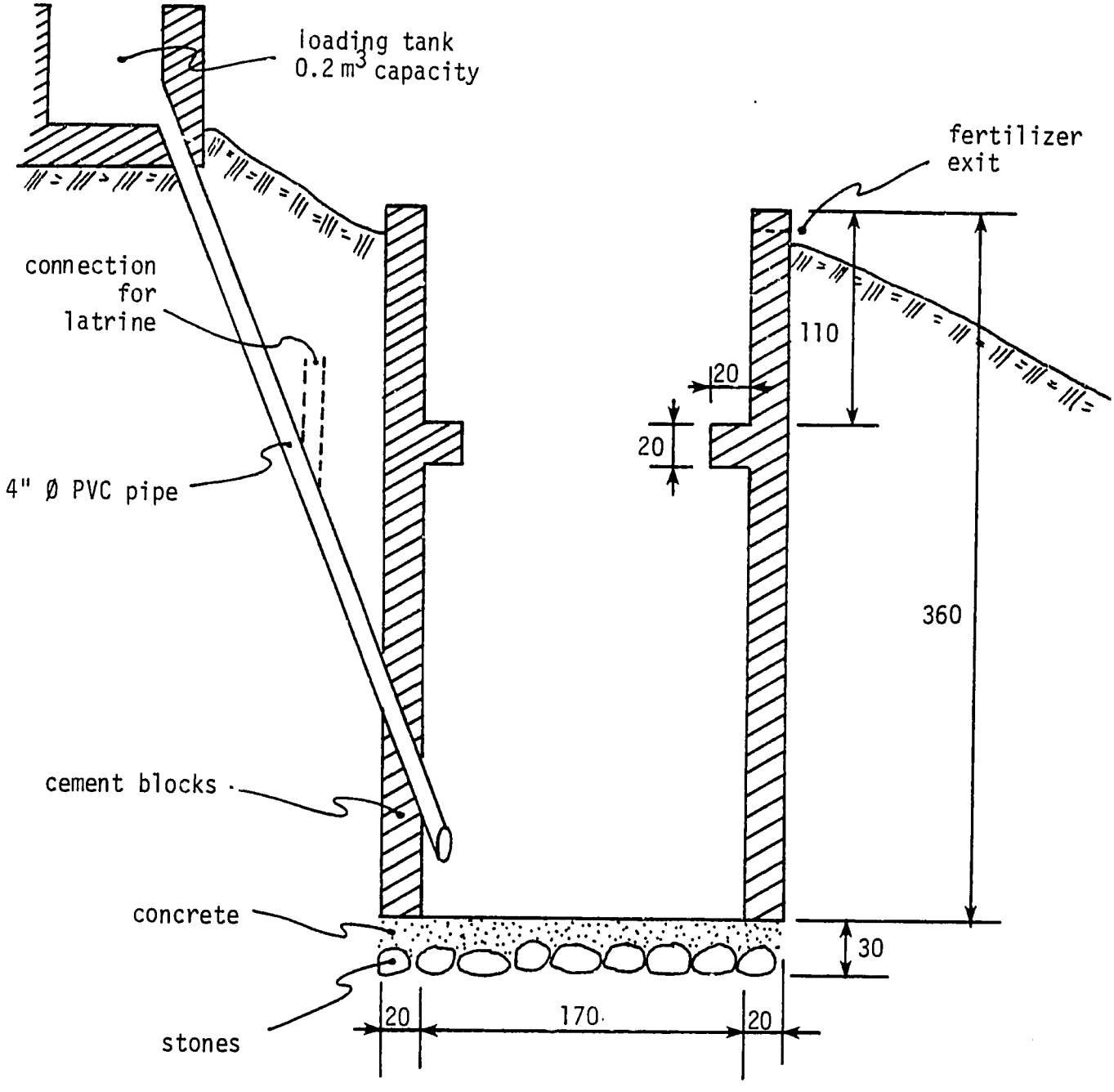

all dimensions in cm
except as noted

has agreed to build a corral. A latrine is scheduled to be connected directly to the loading pipe. It is also planned that the effluent will be separated into liquid and solid portions since it is not desirable to apply wet slurry to fields that normally receive heavy rainfall as does occur. Not only is it environmentally safer to use solid digested manure to fertilize but it is less labor intensive. The liquid portion will be used to fertilize algae ponds. To separate the slurry, screening methods are being investigated. Gas will ultimately be used for cooking. The gas line is already installed. The gasholder employed is the 150 cm diameter, 2.7 m^3 capacity design standardized by INE and used elsewhere.

3. Problem Areas

A corral is needed to localize the source of manure to ensure efficient operation of the digester. Easily workable gas and effluent handling systems are required to gain acceptance by the native community. Early on in the project there was much concern about the economy of biogas. Supplemental community latrine wastes may help towards ensuring dependable gas production, especially if heavy rains preclude sufficient manure collection. Individuals within the community must be trained and assigned to the various tasks of operating and maintaining the digester and related facilities.

4. Recommendations

a) Complete construction of all digester related projects including corral, latrine, effluent separation and algae ponds.

b) Develop an operation and maintenance plan with the community, including a training program to foster knowledgeable and continued

use of the facility.

c) After several months of continuous operation, prepare a status report evaluating the feasibility of community digesters in the Oriente region.

QUILANGA

1. Description

The digester at the Quilanga experimental farm of PREDESUR is located approximately 30 km SW of Loja in the Province of Loja. The digester was recently converted (early 1981) from an original fixed cover design to the present floating cover arrangement. This digester dates back to an earlier PREDESUR program that produced seven demonstration digesters of various designs in the Province of Loja and others in the Province of Zamora-Chinchipe. Except for the subject digester, none of the others are operational and many have been completely dismantled.

The present project was renewed with funds from both PREDESUR and INE. Labor was provided by farm beneficiaries and a PCV, who has been involved in this project since its inception. The digester tank is rectangular, with a volume of 1.22 m^3, treats pig manure and is the only demonstration unit that operates solely on this substrate. As of mid March 1981 the unit was producing gas, but of a methane content too low for combustion. A more detailed description of the digester is given in Table 4.8.

2. Operation

The amount of available pig manure is greatly in excess of the digester's capacity. Less than 5% of the total amount available is all that can

TABLE 4.8
DIGESTER QUILANGA

Location	SW of Loja, Province of Loja
Beneficiary	Experimental farm at community of Quilanga
Peace Corps Volunteer	John Kundert
Regional Agency	Programa Regional para del Desarrallo del Sur de Ecuador (PREDESUR)
Altitude	1500 m
Average Temperature	$18^{o}C$
Digester Type	Floating cover, continuous process
Construction	Clay packed rectangular pit, rectangular 20 gauge steel gasholder, plastic tubing and galvanized metal piping
Volume of Tank	1.22 m^3
Volume of Gas Cover	1.04 m^3
Gas Production	0.33 m^3/day (theoretical)
Feedstock	Pig manure
# Animals, Persons	20-25, including young
Quantity Loaded, % Total	10 kg/day, < 5%
Retention Time	≈ 100 days
Gas Use	Cooking (1 burner)
Effluent Use	Discharged into fish pond
Cost of Materials	S/10,000 ($330) for cover, piping and stove
Cost of Labor	Donated
Estimated Maintenance	-
Estimated Life	10-15 yrs

be handled by this small digester due to hydraulic limitations. Effluent is discharged into nearby fish ponds as fertilizer using buckets. Gas is collected in a 20 gauge steel sheet gasholder (1.04 m^3) specially made to fit the rectangular digester pit previously constructed. Gas then passes through a gas meter, water trap and about 5 m of galvanized pipe and plastic tubing to the pig house. There it is burned in an INE stove for cooking yucca, corn and other feed for the pigs. The design amount of gas produced is approximately 0.33 m^3/day, significantly less than the average amount required for a single family's needs ($\approx 3\,m^3$/day). No one has yet been designated by PREDESUR to operate and maintain the facility as a counterpart to the PCV.

3. Problem Areas

It is not anticipated that continued operation of the facility will present any major technical problems. However, the limited capacity of the unit may pose some developmental constraints. Very little gas can be produced, making only minimal impact on the energy needs of the family and thus the demonstration value of the unit is compromised. It is assumed that a demonstration digester appropriately designed to satisfy typical energy needs of the region is technically feasible and that a much larger digester could be built at Quilanga since there is a use for the gas and all effluent could easily be diverted to field or pond by gravity.

The most expressed concern by the PCV is the transfer of technology to the rural community. PREDESUR is in a good position to use this digester (small as it is) to encourage the development of other digesters in the region but has shown little interest in the present

project so far. This agency has made tentative plans to bring an engineer to the farm to perhaps coordinate the various technology demonstrations.

4. Recommendations

a) Continue to operate the digester facility for several months and document the technical feasibility of producing biogas and fertilizer from pig wastes in the region.

b) Upon satisfactory completion of the above effort, investigate the feasibility of constructing a larger digester at Quilanga or a nearby area including evaluations of technical, economic and social factors.

c) Implement a program of education and training for rural communities with biogas potential based on successful project experiences to date. This task could be fulfilled by INE, PREDESUR or PC/E as part of an ongoing commitment to stimulating greater community interest and participation in biogas plants.

ESCUELA SUPERIOR POLITECNICA DEL LITORAL (ESPOL)

1. Description

ESPOL is engaged in several biogas projects which are partially funded by INE. The oldest unit, built previous to the present ESPOL/INE agreement, is a small steel drum of 0.11 m^3 volume with two smaller sized steel drums for gas storage. Digesters built recently include a 0.33 m^3 batch unit constructed of concrete with an approximately 20 cm opening for loading and cleanout, and a 0.55 m^3 continuous process floating cover unit. A separate water sealed gasholder, connected to the

last two digesters, was constructed to demonstrate a new external type guide. In addition to these units, many 5 gal ($\approx 0.02\ m^3$) plastic containers were on hand for conducting bench scale batch experiments with different substrates. An engineering student and a PCV have provided most of the labor to construct the new facilities, operate them, and conduct the experiments to date.

Accessory equipment at ESPOL provided by INE include a typical gas stove, a large inner tube for collecting gas from the bench scale units, and the device designed by INE for measuring on-site the methane content of biogas. A gas engine, to test the efficiency of biogas as a fuel, and construction tools and workshop space are available through the Mechanical Engineering Department with which the research program is associated. The professor responsible for the biogas work is Dr. Alfredo Barriza. Analytical laboratory facilities at ESPOL have not yet been available to analyze samples. A more detailed description of the digesters is given in Table 4.9.

2. Operation

Most of the work to date at ESPOL has been to construct the two new digesters and the separate floating gasholder. Initial loading of the floating cover digester took place in March 1981. Early experiments in late 1980 had been conducted with the 5 gal bench scale units using mixtures of various plant residues and manure. The residues examined so far have been coffee pulp, soybeans and rice hulls, the latter showing the most promise initially. Most trials utilized at least some manure as a seed for bacterial growth. The cattle

TABLE 4.9

DIGESTERS AT ESCUELA SUPERIOR POLITECNICA DEL LITORAL (ESPOL)

Location	Guayaquil, Province of Guayas		
Beneficiary	Escuela Superior Politecnica Del Litoral (ESPOL)		
Peace Corps Volunteer	Ken Demers		
Regional Agency	Escuela Superior Politecnica Del Litoral (ESPOL)		
Altitude	Sea Level		
Average Temperature	$26^{o}C$		
Digester Type and Construction	1. Rigid tank, steel, continuous process 2. Rigid tank, concrete, brick & mortar, batch process 3. Floating steel gasholder, concrete foundation, brick and mortar walls, continuous process		
	(1)	(2)	(3)
Volume of Tank	0.11 m^3	0.33 m^3	0.55 m^3
Volume of Gas Cover	NA	NA	0.21 m^3
Gas Production	-	-	0.4 m^3/day (theoretical)
Feedstock	Cattle manure (from slaughterhouse), crop residues		
# Animals, Persons	NA		
Quantity Loaded, % Total	(3) 25 kg/day (design)		
Retention Time	20-25 days (design)		
Gas Use	Not used		
Effluent Use	Not used		
Cost of Materials	(2) S/1,500 ($50), (3) S/2,500 ($80)		
Cost of Labor	≈ S/1,500 ($50), each of above		
Estimated Maintenance	-		
Estimated Life	10-15 yrs		

manure for all digester operations comes from a local slaughterhouse, extracted from the animal's stomachs; thus, it is not well digested and has a high fiber content. Neither the gas nor effluent are regularly used from any of the units and are generally wasted on site.

Plans at ESPOL call for renewed bench scale experiments with plant residues including bagasse (sugar cane) and similar experiments using the 0.33 m^3 concrete batch unit. Also, new gasholders are being fabricated out of 2 mm sheet in the metal shop to replace the 50 gal drums now used. Future plans, after significant data are collected, include building a demonstration unit in a surrounding rural area, possibly for the digestion of plant wastes. It is expected that INE funding will continue at ESPOL for some time and that at least one professor and one student will remain involved with the research program. The PCV assigned to the project in the fall of 1980 is scheduled to stay for 2 years.

3. Problem Areas

Due to the high fiber content of the manure obtained, scum formation has occurred in the floating cover unit making it difficult for the gasholder to freely move up and down on its guide. Regarding technical activities, apparently there is no overall work plan at ESPOL for the conducting of biogas research and development activities. Data were not available on the experiments conducted to date. Analytical capability is totally lacking, other than measuring the CO_2 content of the gas. Furthermore, the program does not get sufficient publicity, nor has biogas technology been considered for transfer to interested parties outside the school, other than the field demonstration unit planned for later in the year.

4. Recommendations

a) Design an overall biogas research and development plan incorporating the objectives and responsibilities of each group participant - ESPOL, INE and PC/E.

b) As part of the plan, bring all digester facilities, existing and planned, into satisfactory operation in a carefully integrated manner using the data collected early in the program to define the course for later project work.

c) Locate a source of manure and other wastes that is compatible with the nature of the experiments planned.

d) Secure access to analytical laboratories for analysis of gas and slurry samples, important to monitoring digester performance.

e) Perform a study of the economics of gas engine performance and application.

ESCUELA POLITECNICA NACIONAL (EPN)

1. Description

The digester at EPN in Quito was constructed in 1980 to support research in biogas by chemical engineering student, Margoth Avila. The unit is a fixed cover, concrete and brick rectangular design of 2 m^3 volume. Cow manure, chicken manure and sawdust are delivered to the school as feedstock for this experimental unit. Feed and effluent openings are 5 cm in diameter and are located at opposite ends of the digester, and a vertical baffle extending to mid-height of the digester minimizes hydraulic short circuiting. Gas exits from the unit top. Neither INE nor PC/E are directly involved in this work. A more detailed description of the digester is given in Table 4.10.

TABLE 4.10
DIGESTER AT ESCUELA POLITECNICA NACIONAL (EPN)

Location	Quito, Province of Pichincha
Beneficiary	Escuela Politecnica Nacional (EPN)
Peace Corps Volunteer	None
Regional Agency	Escuela Politecnica Nacional (EPN)
Altitude	2800 m
Average Temperature	$14^{o}C$
Digester Type	Rigid tank
Construction	Concrete base and top, brick and mortar walls
Volume of Tank	$2\ m^3$
Volume of Gas Cover	NA
Gas Production	$0.5\ m^3$/day (theoretical)
Feedstock	Cattle manure, chicken manure, sawdust
# Animals, Persons	Delivered
Quantity Loaded, % Total	11 kg/day
Retention Time	≈ 100 days
Gas Use	Not used
Effluent Use	Not used
Cost of Materials } Cost of Labor	S/8,000 ($270)
Estimated Maintenance	-
Estimated Life	10-15 yrs

2. Operation

A mixture of manure and sawdust (10:1 by weight) had been loaded daily, the % solids determined, and a portion of the gas collected and analyzed. Typical measurements were 8% total solids loaded and 55% methane (CH_4) in the gas. Preliminary results indicated that a retention time of approximately 30 days for cow manure at the existing temperature yielded the highest methane gas content. After operating the digester for 4 months, the following conclusions were made regarding the project.

a) Heating the digester may prove justifiable since the temperature was so low (14°C).

b) Several gas leaks were noticed and greater care must be taken in construction of such fixed cover Chinese design units to minimize this problem.

c) The unit was too large for practical research purposes where both feed and effluent required transportation to and from the site. (Note the largest unit at ESPOL is 1/3 the size of the EPN digester).

3. Problem Areas

The unit was operated only 4 months and then idled for basically the reason mentioned in 2c above; it is too large. If the digester was smaller and easier to operate, perhaps research in biogas would have continued as an on-going program at EPN. Its future is uncertain at the present.

The nature of the research conducted might have been better integrated with other digester demonstrations in the field. For example, it is not clear how the experimental determination of optimum methane production specifically relates to any INE biogas program development needs.

4. Recommendations

a) Encourage appropriate departments and researchers at EPN to continue working in biogas but in cooperation with GOE or other agencies as part of a national development program. Projects should directly impact the technical, social or economic aspects of biogas facilities.

b) As a beginning, the work performed at ESPOL is exemplary, with the exception that research must have the support of an experienced analytical laboratory and staff.

VALLE HERMOSO

1. Description

This digester serves a single family and is located approximately 25 km N of Santo Domingo in the Province of Pichincha. It is a batch design consisting of two identical tanks of 8.5 m^3 volume and a separate gas-holder floating on water of about 2.7 m^3 volume. The digester was constructed in 1980 with funds provided by OLADE. The digester had been loaded only once with cattle manure and coffee wastes as of mid March 1981. A more detailed description of the digester is given in Table 4.11.

2. Operation

The digester tanks are designed to be loaded alternately with a retention time of 2-4 months to provide a relatively constant supply of gas. Access to the concrete tanks is possible by removing their steel covers which are normally anchored down in position. Manure and coffee wastes are layered in the tanks and water then added to make a mixture of about 35% total solids. The labor required to load or unload each digester is about 3-4 person days. Before unloading,liquid effluent can be drained to the fields by opening valves at the bottom of each tank.

TABLE 4.11
DIGESTER VALLE HERMOSO

Location	25 km N of Santo Domingo, Province of Pichincha
Beneficiary	Non-resident owner
Peace Corps Volunteer	None
Regional Agency	Organizacion Latino Americana de Energia (OLADE)
Altitude	≈ 300 m
Average Temperature	$25^{o}C$
Digester Type	Twin batch tanks, separate floating gasholder
Construction	Reinforced concrete, steel gasholder
Volume of Tank	(2) 8.5 m^3
Volume of Gas Cover	≈ 3
Gas Production	4 m^3/day (maximum)
Feedstock	Cattle manure, coffee wastes
# Animals, Persons	-
Quantity Loaded, % Total	20 cm layers, alternating manure and coffee wastes; 900 gal water
Retention Time	2-4 months
Gas Use	Cooking, 1 burner (design)
Effluent Use	Gravity flow of liquid effluent/solids applied to fields
Cost of Materials Cost of Labor	S/150,000 ($5,000)
Estimated Maintenance	7-8 person-days for loading/unloading each batch
Estimated Life	10-15 yrs

Digested solids are manually applied to the fields. Gas is collected in a separate gasholder and piped to the owner's house for cooking. On the day of our visit, 23 March 1981, the owner was not present, although we talked to his neighbor concerning the project. No gas was being produced on that day.

3. Problem Areas

This digester was designed and constructed well, although apparently there is little interest in operating it on a continuous basis. The unit is also very expensive.

The Valle Hermoso digester is the only family or farm scale batch design in the country, however, and it does offer the possibility of evaluating a strikingly different approach to digester facilities design.

4. Recommendations

a) Try to maintain continuous operation of the facility so that GOE can benefit from this initial prototype batch digester experience.

b) Encourage experiments with various mixtures of manure and plant residues to identify characteristic feedstocks with the greatest potential in the region.

c) Based on the knowledge gained from operation of this digester, consider the design of similar batch digesters with special emphasis on reducing costs and labor requirements.

ILUMAN

1. Description

The digester serving the community of Iluman is located near Otavalo in the Province of Imbabura. The Iluman digester is a fixed cover

design, with a volume of 32 m^3 and utilizes cattle manure. A latrine is also connected to the digester, but is hardly used. The plant was constructed in 1976 with funds from USAID and PC/E, and is the oldest operating digester in Ecuador. Other projects were funded concurrently, including a fish pond above the digester that is enclosed by extended walls and roof, giving the rectangular shaped digester the appearance of a small house. Nine families in the immediate vicinity of the digester share in the responsibilities and benefits of this facility. Present technical support is provided by a PCV who visits the site only occasionally and who is permanently assigned at the San Cristobal digester close by. A more detailed description of the digester is given in Table 4.12.

2. Operation

The Iluman digester is located below the level of the stable and therefore the loading tank can be charged with manure by simply scraping off the concrete floor. The effluent flows by gravity to only a very small area of the fields as fertilizer and most is wasted. Gas lines from the digester of 1/2" diameter plastic tubing are connected to 6 homes at present for cooking, usually for an hour each morning. There is no gas storage other than the digester tank itself. A latrine, in addition to other PC/E projects such as solar hot water and fish culture, was demonstrated at the site but contributes very little feedstock to the digester.

3. Problem Areas

Gas leaks have plagued this digester from the beginning. Only a pressure of 3" (8 cm) of water column can be developed before leakage occurs. Attempts have been made in the past to plug the leaks by emptying the digester completely and installing a plastic liner inside the tank. So far, this has not resulted in a permanent solution.

TABLE 4.12
DIGESTER ILUMAN

Location	Near Otavalo, Province of Imbabura
Beneficiary	Community of Iluman
Peace Corps Volunteer	Keith Kline (monitor only)
Regional Agency	None
Altitude	2450 m
Average Temperature	21° C
Digester Type	Fixed cover, continuous process
Construction	Reinforced concrete base, walls and top
Volume of Tank	32 m^3
Volume of Gas Cover	NA
Gas Production	≈ 12 m^3/day (theoretical)
Feedstock	Cattle manure, human waste
# Animals, Persons	8-16, minimal latrine use
Quantity Loaded, % Total	160 kg/day, < 50%
Retention Time	≈ 200 days
Gas Use	Cooking (6 stoves at present)
Effluent Use	Not used
Cost of Materials	S/120,000 ($4000.), includes stable, solar hot water, greenhouse, fish culture, agriculture and nutrition/health projects
Cost of Labor	
Estimated Maintenance	-
Estimated Life	10-15 yrs

The underutilization of the digester simply worsens the economics of operation and maintenance. It is estimated that only about 3-4 m^3/day of gas is now produced compared to a theoretical of 12 m^3/day. Of course, to increase production, more cattle or greater confinement is necessary.

If every family involved required gas simultaneously, there would be a definite supply problem, especially at the low loading rates now observed. Furthermore, since gas lines to each house are connected in series, gas pressure is less for users further from the digester. Another disadvantage for some users is that there are no water traps and the lowest lines will collect most of the water.

4. Recommendations

a) Plan a shutdown of the facility for the purpose of cleanout, and locating and repairing gas leaks. The low gas pressure achieved at present is marginally sufficient to supply gas to a network of 9 houses.

b) Attempt to increase the amount of manure and human wastes loaded to ensure a satisfactory gas supply to each household.

c) Install water traps where necessary.

d) Encourage users to spread out gas demand throughout the day to minimize the possibility of depleting storage.

e) Investigate options for effluent distribution and use to recover fertilizer benefits that are presently wasted.

SECTION 5

BIOGAS PLANNING FOR RURAL DEVELOPMENT

INTRODUCTION

One of the major reasons for biogas programs in Ecuador is to provide energy for rural areas. Although Ecuador has abundant conventional energy supplies throughout the country, there is not always sufficient energy available in the rural areas due to the difficulties of distribution in geographically isolated areas. For this reason, a non-conventional energy (NCE) source such as biogas is particularly appropriate in areas where gas, oil, or wood are not available on a reliable basis. In the extreme case, some areas are so remote that there is no road accessibility, and fuel must be flown in. Here, especially, biogas would be most beneficial.

Biogas for rural development has been the major thrust of biogas experimental and demonstration plants to date. As described in the previous section, all existing plants are for rural development except Santa Elena and Rancho Ronald. Rural development in this context is defined by the introduction of biogas plants to farmers that are relatively poor. These are primarily single family digesters designed to handle the wastes from 3-15 cattle or equivalent. Larger plants on dairy farms used to produce gas for pasteurizing milk, as well as plants using residues such as coffee and cocoa wastes resulting from commercial production, are discussed in the next Section.

To assure an ongoing program of testing and dissemination of biogas technology, a central coordinating body is required. To help meet the goals

of GOE's economic development programs, INE was directed to study NCE technologies, including biogas, and plan overall support activities for the country. If biogas is to make the greatest impact on the energy needs of rural areas, criteria must be identified and evaluated that are most important to the success of a demonstration project. Biogas will not be feasible under all conditions and technical, social and economic issues must be addressed. Institutional support can also be a determining factor regarding the success of individual project or overall program implementation.

SITE SELECTION

For rural development the most critical concern is that biogas plants be located at sites carefully selected to maximize their acceptability by the community as a viable energy option. There are literally hundreds of thousands of families in rural areas of Ecuador, and since biogas plants would almost entirely serve single families, there is an extremely large choice of possible site locations. Family digesters having now been demonstrated, perhaps the only technical concern with respect to these sized units is if there is sufficient feedstock to operate the unit. Assuming digestion of animal manures to be the only proven application in Ecuador, then a minimum of 3 cattle (using cattle as an example) are necessary to meet a typical family's cooking requirements. This automatically eliminates biogas plants for families which are so poor that they have no animals and earn their livelihood primarily by working as laborers. Therefore, not the poorest, but only the relatively poor, can be assisted by single family biogas plants, and the number of feasible locations is thus reduced accordingly.

Outside of having enough animals, perhaps the single most important criterion for site selection is the social aspect of enthusiasm and dedication of the potential biogas plant owner. Every plant will require a regular program of operation and maintenance for continuous biogas production. It is likely that most families would have an interest in biogas, since the technology is relatively new, but potential owners should have the tenacity and persistence to keep the unit operating into the indefinite future. In this manner, each new digester could also serve as a model for the surrounding community to see the benefits of biogas, which could lead to the building of additional plants.

Another very important criterion for site selection is the demand for and successful utilization of the biogas energy produced. Biogas plant sites should therefore be located where the rural beneficiary presently has a difficult time obtaining needed energy supplies. In most cases this means a scarcity of fuelwood, kerosene, or LPG (liquefied petroleum gas), or else unaffordable prices. Biogas produced by family digesters is used almost exclusively for cooking, normally replacing wood, and therefore must economically compete with fuelwood and other energy supplies for ultimate wide acceptance. An evaluation of the economics of biogas in Ecuador is provided in Appendix C. At this point, a major incumbrance to family sized biogas plants is the initial capital cost, and for this reason all existing units have been partially funded by various development agencies, mostly by INE.

In addition to the size of a plant, capital cost is also dependent on the type of design used. Four different basic designs have been

demonstrated in Ecuador - floating cover, fixed cover and plug flow, which are all continuous feed units, and batch units. The careful selection of design can have a significant effect on the successful operation of a biogas plant. A least cost design for small family digesters is either fixed cover or plug flow since both eliminate the need for expensive floating gasholders. Gasholders, normally manufactured from steel sheet, may be made of other materials that are less costly, such as fiberglass or cement, although these have not been widely used due to the weight adjustments required for proper gas pressure. The typical floating gasholder designs emphasized in INE's present demonstration program are more suited for many larger family digesters.

Batch digesters are appropriate for feedstocks that do not easily flow through pipes, for example, plant residues. Unless finely chopped and heavily diluted, these wastes are relatively nonhomogenous, unlike manure that is partially digested by the animal, and are simpler to digest in a batch process. Potential also exists for batch digesters for communities or cooperatives where daily operation and maintenance is undesirable. Loading and unloading the digester every 2 months or so may prove to be a more convenient group responsibility when scheduled around other shared periodic work activities.

NATIONAL PROGRAM IMPLEMENTATION

INE is presently engaged in developing biogas energy programs for the country. As noted, rural development has been the main objective behind the experimental and demonstration biogas projects funded since 1980. It is further expected that this emphasis will continue in the near future. Three components of a national biogas program for rural

development are discussed below. They are: 1) coordination with GOE Integrated Rural Development (IRD) programs; 2) continued funding of demonstrations, and 3) training programs implementation.

1. Coordination with IRD Programs

With regard to site selection, it is interesting to note that none of the existing biogas plants described in Section 4 are located in IRD areas that are presently supported by extensive agricultural and economic development programs. As a part of overall IRD goals, single family biogas plants could satisfy a definite need for relating energy to other development concerns.

The major advantage of integrating these programs is that IRD areas are studied intensively with respect to social and technical aspects of development. The social acceptability of biogas could be included in on-going social studies. The technical and economic feasibility of energy self-sufficiency on family farms could be studied with the benefits of biogas plants as a net energy producer compared to other purchased fuels and fertilizers. Substantial funds are available for projects in IRD areas. AID/E has supported projects near Salcedo and Riobamba and is planning a third near Jipijapa. It would be most convenient to include biogas demonstrations in these areas to promote greater interest and gain further experience.

2. Continued Funding of Demonstrations

Since the rural program involves relatively poor people, it has been desirable to provide partial subsidy of the initial units. Costs of most of the 12 units now operating or under construction have been

shared by INE, the Regional Development Agency and the owner. Such a formula, with possibly decreased subsidy, should be continued. The existing plants, plus 2 or 3 more planned for construction in 1981, will provide data on the social, technical and economic aspects of biogas plants for rural development.

After these data have been thoroughly evaluated later in 1981, a program of biogas demonstrations will be planned for succeeding years with special attention to site selection, design and capital cost. It would be well to begin implementation with a relatively modest program of perhaps 50 plants per year for the next 4 years, beginning in 1982. Of paramount importance is that each plant be successful, even if only a few plants are built, to firmly establish a proven record of acceptable performance.

The primary purpose of rural development biogas plants is to provide energy, but perhaps as important in the early stages is the need to emphasize that most conventional energy supplies such as oil and gas are finite, and that other sources of energy must be used in the future. With this in mind, it becomes important that biogas knowledge be expanded throughout Ecuador to enable more widespread applications in the future as oil and gas supplies become more scarce and expensive.

3. Training Programs Implementation

Development of biogas in rural areas has been a program of PC/E since 1974, although intensive technical training in biogas was never provided to PCV's until 1980. PCV's trained in that program are now stationed in scattered rural areas, and each has constructed one or

more biogas plants. A training program similar to the PCV's should be made available to selected rural community members who would be good candidates for household size biogas plants. They would become the cadre of rural Ecuadorians experienced in biogas who would participate in future development programs when the PCV's have departed. It is necessary to have essentially a transfer of technology from PCV's to the rural communities. This might best be accomplished by having the training conducted by the PCV's who have both the technical knowledge and the actual field experience. In addition, MAG (or other agency) extension staff need to be trained as well. As subject material for these training sessions and for later distribution to interested parties, a practical biogas handbook specifically applicable to the conditions in Ecuador should be prepared. This could be done by INE, with input from PC/E.

SECTION 6

BIOGAS PRODUCTION AT COMMERCIAL FACILITIES

Several of the existing biogas demonstration facilities are significantly larger than typical family scale units and are herein considered agro-industrial or "commercial", facilities. Some of these digesters may be of similar construction to family scale units, such as Santa Elena and Rancho Ronald both floating cover designs, although site specific conditions will ultimately determine the best design. Generally, a greater degree of automation will be justified at larger facilities due to certain economies of scale.

Basically, commercial scale facilities may be divided into two groups depending on the feedstock utilized - livestock wastes or plant wastes. INE has already begun investigating the possibility of digesters at large poultry farms. Digestion of cellulosic plant residues has not been demonstrated without manure in combination with the plant material, except for several bench scale attempts with poor results at ESPOL. Commercial digester possibilities for application in Ecuador are considered below.

LIVESTOCK WASTES

Animal manures are best utilized by the anaerobic digestion process since they are predigested, relatively homogeneous, and thus easy to load and readily converted to biogas. Unlike family scale digesters, the benefits of larger facilities include pollution control, and often farm labor savings and fertilizer credits. The biogas produced can displace a significant amount of petroleum fuel reducing local dependency on outside resources

subject to severe cutbacks and price hikes.

A prerequisite for any application of digester technology, of course, is a use for the gas. This is not generally a problem at most commercial sites since biogas can be substituted for any fuel used to produce heat and can also be used to run stationary engines and produce electricity. However, only where energy supplies are relatively unreliable and expensive will biogas digesters be economically justified. Due to the fact that kerosene is subsidized by GOE and available at a price over 5 times less than world levels, it is hardly attractive to use any other form of energy that is not free. Nonetheless, petroleum fuel prices are bound to rise rapidly within the decade as domestic supplies are used up and demand continues to rise.

The main concern in designing digesters for commercial facilities is to fit the digester into normal overall operations. Proper sizing and siting to minimize capital and operating costs is very important to the success of a facility. Many cattle may be raised on a farm but if they are not confined then manure collection poses a significant problem. For this reason, dairy farms in particular offer a certain benefit in that the animals must be held in one area for at least 3-4 hours per day for milking. Manure can then be conveniently shoveled into wheelbarrows and carted to the digester, or, if a concrete floor is used, scraped directly into an appropriately located mixing tank. For the greatest economic return, utmost care must be given to determining exactly how much manure will be available to correctly size the unit, and how it will be fed to the digester to minimize operating requirements.

Longer confinement times allow a greater amount of manure to be collected

for a given number of animals. If only a marginally small number of animals are available, confinement overnight should be considered. The case for total confinement has already been decided at many commercial poultry farms for reasons of operational simplicity. Manure falling through wire cloth cages is easily collected. To digest chicken manure with a low C/N ratio of about 10, it is advantageous to add carbonaceous material such as plant residues to improve the biogas yield.

The most immediate application of digesters on a commercial scale seems to be dairy farms where milk is pasteurized. Both Santa Elena and Rancho Ronald are examples of this type of facility. Biogas is planned to be used in place of pressurized kerosene to produce steam for heating the milk. Although these units are not presently cost effective (see Appendix C), they clearly demonstrate the technical feasibility of larger scale systems. It is necessary that a detailed cost/benefit analysis of digesters be conducted for dairy farms of 20 or more cattle and for other livestock operations to determine where several more demonstration facilities may possibly be built.

PLANT WASTES

For the purposes of the following discussion, "plant wastes" are defined to include crops, crop residues, and crop and food processing wastes. This definition excludes woody plants containing large quantities of poorly digested lignin. Plant residues offer great potential as a renewable energy resource due to the prodigious growth rates achievable in the tropical climate.

A description of plant waste materials found in Ecuador is given in the

report of Beinhart and Henry (1981). Combustion of plant residues to produce direct heat energy was emphasized in that study, and consequently relatively dry materials were recommended. For digestion, relatively wet plant wastes are advantageous to avoid adding large quantities of water and excessive mixing. Particularly coffee and cacao pulp, and vegetable processing wastes would require the least preparation.

Plant wastes do not degrade as readily as cattle manure since the necessary enzymatic hydrolysis of the cellulose to soluble organics is the rate controlling step in the overall conversion to methane gas. To improve the digestability of plant wastes, size reduction is most useful to increase bacterial activity. Mechanical chopping and grinding, however, are energy intensive and economic trade-offs must be carefully determined. For this reason, plant wastes that are normally highly processed offer definite economic benefits.

Some plant wastes are deficient in nutrients essential for anaerobic fermentation to occur. Furthermore, the C/N ratio of most plants is rather high, normally greater than the ratio for manure and the optimum of 30/1. To remedy this situation, it may be necessary to add some animal manure, especially chicken manure (low C/N ratio) to the plant wastes to improve the nutrient mix.

Due to the fact that many sources of plant wastes will be either dry or composed of large fibrous material, batch digesters may prove effective. Batch digesters do not require that the waste feedstock flow as a slurry. Higher solids levels and longer retention times are possible, without increasing the volume required. Two or more batch digesters can also be

built in parallel, with the loading of each staggered to ensure a constant supply of gas, avoiding the downtime experienced with a single batch digester. The digesters at Valle Hermoso are an example of this arrangement.

There are many sources of plant wastes available in Ecuador from the various agro-industries. These include coffee, cacao, rice and sugar cane. To establish which plant materials are most easily digested with a minimim of additional processing, research should be continued at ESPOL and in the field at certain demonstration facilities. Special attention to controlled experiments and valid data collection should be given. The development of digesters designed to utilize this abundant energy resource must clearly be an important component of GOE's alternative energy development plans.

SECTION 7

BIOGAS FROM HUMAN WASTE AND WASTEWATER

In a further attempt to examine all possible applications of biogas technology in Ecuador, INE has begun to consider the recovery of biogas from human waste and wastewater. Major interest was expressed at this time in sewage as a digester feedstock. Somewhat less emphasis was placed on untreated human wastes. Finally, sanitation problems specific to suburban areas surrounding Guayaquil were addressed with consideration of biogas facilities as an alternative. These subjects are discussed below.

MUNICIPAL SEWAGE

Biogas has been attained from municipal sewage using the anaerobic fermentation treatment process for many decades. The feedstock matter consists primarily of human excreta which is removed from the sewage by gravity sedimentation in primary and secondary waste treatment. Solid human waste is more readily fermented than animal manures, since it comprises foods that have usually been cooked and more thoroughly pre-digested.

A major consideration in obtaining biogas economically from human wastes transported in sewerage systems is dilution by water used to flush toilets and added to the system by other normal household activities such as bathing. A great deal of water must therefore be processed in order to obtain a significant amount of solid organic matter for conversion to biogas. As an example, data taken in April 1980 from the sewerage system serving the city of Portoviejo indicates that the concentration of organic solids is about 230 mg/l, or 230 g/m^3, a very dilute feedstock. Other data collected in

November 1979 shows that the amount of material which settles in a one-hour period ranges from one to eight ml/l. These data are consistent with those reported in other countries.

With a high dilution factor and using data compiled by the U.S. Environmental Protection Agency (EPA), Beinhart and Henry (1981) estimated that biogas produced by anaerobic digestion of sewage would cost from S/1.58 to S/1.98 per 10^3 kcal (S/8.43 - S/10.60 per m^3 biogas). This cost is comparable to the total operating expense of a typical 3 m^3/day animal manure biogas plant (≈ S/8.00 per m^3, see Appendix C). It should be pointed out, however, that the EPA data is based upon equipment intensive design of sewage treatment plants in which the digesters are heated to optimum temperatures. Such would not be the case in Ecuador, and innovative designs could result in costs which are much lower than those projected by EPA.

The Imhoff tank which was first used for sewage treatment more than a half century ago, could be re-designed to collect the methane gas produced. An Imhoff tank is a two-compartment tank in which sedimentation occurs in the upper compartment and anaerobic digestion in the lower compartment. The compartments are connected by an opening in partitions that separate them. The partitions serve to deflect the downward passage of settling particles from the upper to the lower compartment. They also prevent the upward flow of biogas into the sedimentation compartment, diverting the gas to the outside walls where it escapes. Figure 7.1 shows plan and elevation views of a standard Imhoff tank design.

Imhoff tanks have been designed for both biogas collection and use, and for other instances where the gases are wasted to the atmosphere. Proprietary equipment which operates on the same principle as an Imhoff tank with gas

FIGURE 7.1

STANDARD IMHOFF TANK

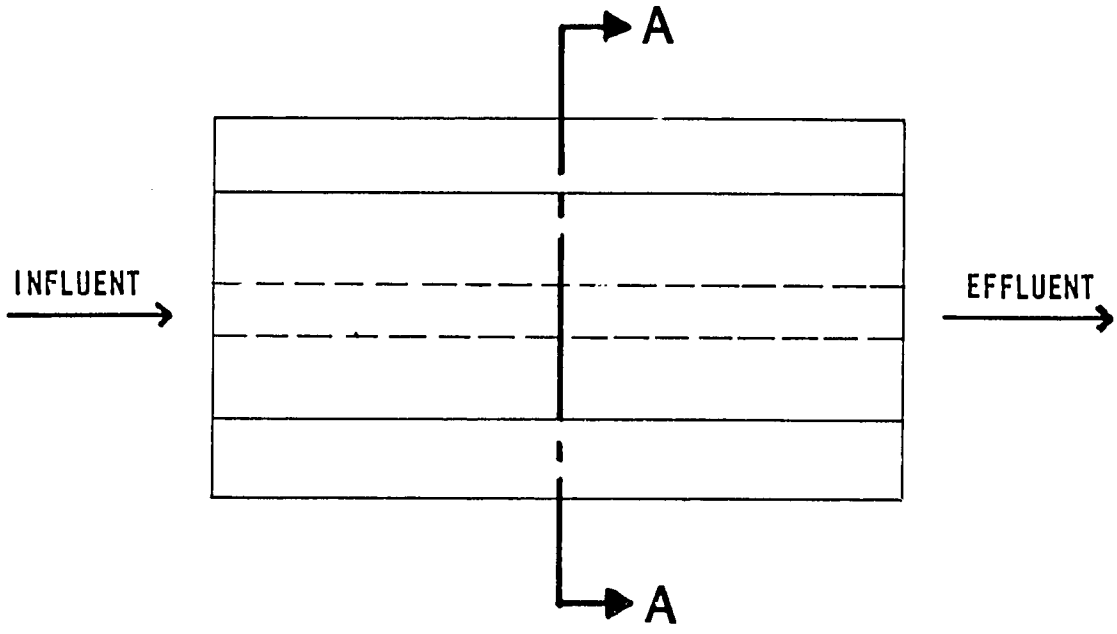

PLAN

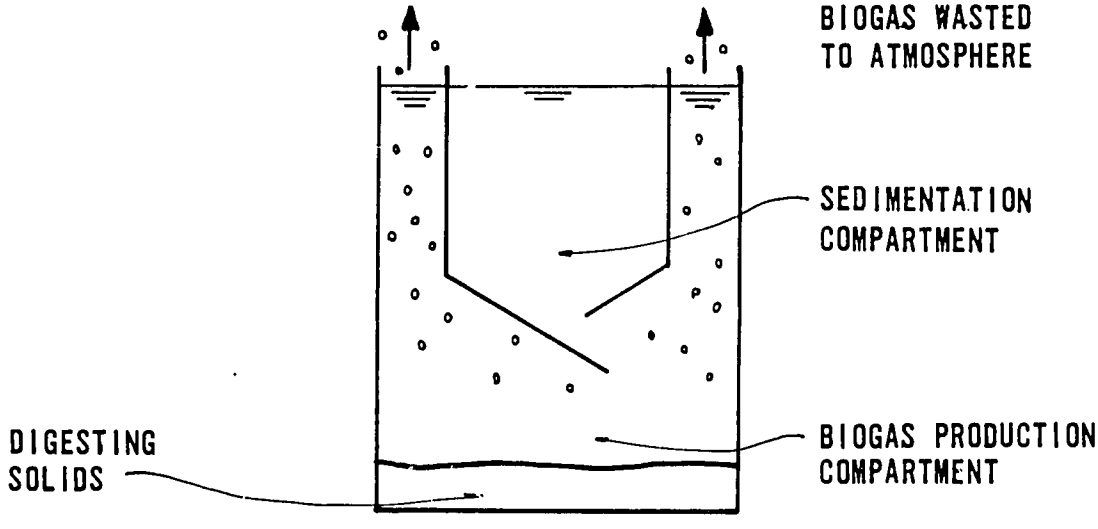

SECTION A-A

collection is manufactured by at least two American firms, the Dorr-Oliver Corp. and Lakeside Engineering Corp. Figure 7.2 shows a modified Imhoff tank.

An Imhoff tank with biogas collection is an excellent example of appropriate technology. Not only is energy recovered from a renewable resource, but the process further provides a degree of pollution control. Results of treatment are typically 50 - 65% total solids removal and 35 - 50% biochemical oxygen demand (BOD) removal, the two nuisance-causing characteristics of untreated sewage.

The amount of biogas produced from sewage averages 30 m^3/day per 1000 persons, normally less in colder climates and more in warm climates. The plant serving a community with a population of 5,000 would therefore produce approximately 150 m^3 per day, or sufficient biogas for approximately 50 families in the near vicinity. In addition to the energy derived, a substantial amount of pollution reduction occurs, as stated above.

Several cities and villages in Ecuador have sewer systems that discharge directly to rivers and are the source of serious pollution problems for downstream users of the water. Installation of biogas plants in the form of Imhoff tanks or proprietary plants which serve the same purpose would be extremely useful in these cities to recover energy and reduce pollution.

Sewage treatment facilities for the city of Portoviejo were inspected to determine the feasibility of biogas production. Portoviejo already has oxidation pond treatment of sewage, but it was observed that a biogas plant could be installed ahead of the ponds if so desired. Since pollution abatement is already accomplished, the gain from installing a biogas plant here would be only the biogas itself. Therefore, it would appear more

FIGURE 7.2

MODIFIED IMHOFF TANK

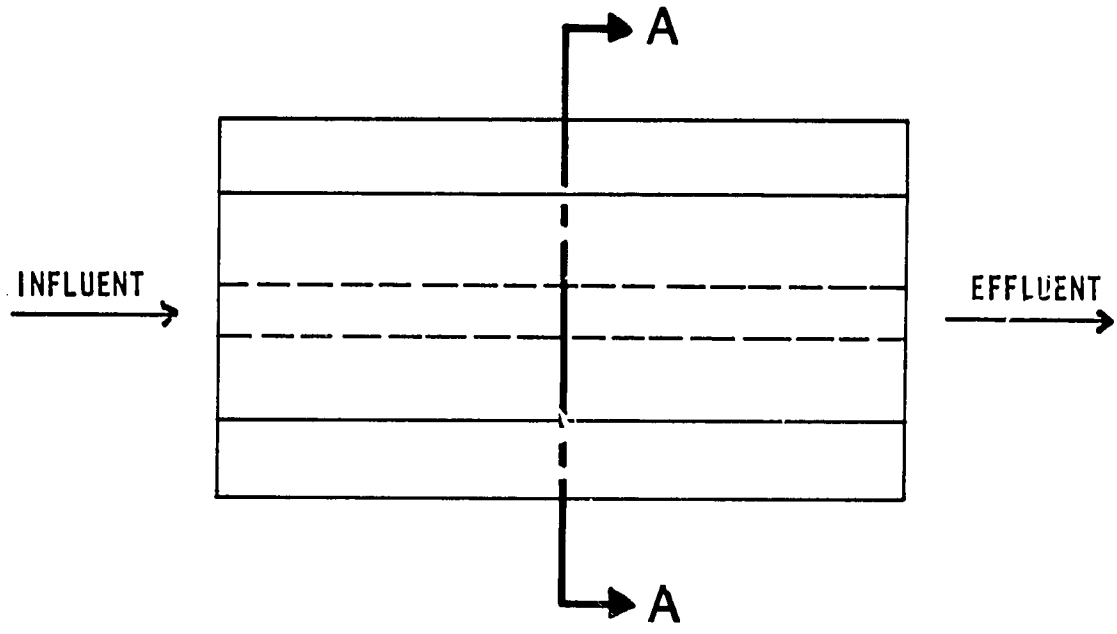

PLAN

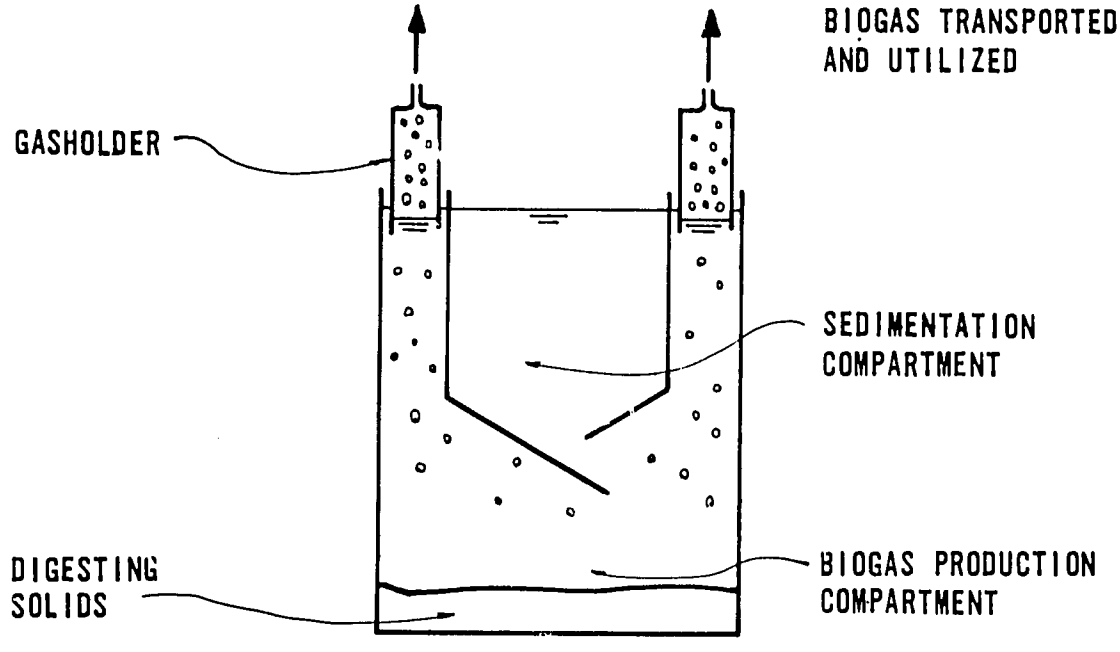

SECTION A-A

promising initially to install biogas plants where there are presently no sewage treatment works, accomplishing both energy production and pollution reduction with a single facility.

HUMAN WASTES

The production of biogas from human wastes collected in household or communal toilets has been explored in many countries. Although easily fermented, it is generally found that the social and cultural constraints to this use of human wastes may prevent wide acceptance of the practice. The primary reason is that in most countries people are not inclined to carry, mix, or otherwise work with human waste materials. The energy produced, amounting to about 0.3 m^3 per day of biogas from a family of 10 people, also does not justify the expenditure of funds to construct such a biogas plant for an individual family.

In areas where sanitary disposal of human wastes is not available, yet biogas plants are desirable to handle animal manures, latrine wastes should definitely be added to the digester as well. These wastes will normally accumulate under the house where they are spread around by domestic animals loose in the yard. The anaerobic fermentation process nearly completely destroys pathogens and parasitic eggs that may be transmitted. Upon exposure to air and sunlight as digested effluent upon the fields, any remaining disease bearing organisms are subsequently killed. Little health problem is posed, then, by application of effluent to fertilize crops.

This type of biogas facility is apparently very successful as practiced in China, where millions of homes are served by such plants. The Chinese, however, do not feel that human wastes are offensive. The digester thus

becomes a convenient disposal chamber for the household wastes, thus improving sanitary conditions, but with the majority of gas production derived from the animal waste feedstock.

Biogas plants serving communal toilets have sometimes been justified for sanitation purposes in certain countries. From the social point of view, however, successful plants are largely dependent on the degree of independence felt by each person or family. In Ecuador the strong feeling of personal independence would probably preclude any acceptance of these types of plants on a sustained basis.

SUBURBAN GUAYAQUIL

Although the city of Guayaquil has a sewerage system, the rapidly growing suburban area is not yet sewered. Discussions between Ing. Yanez of INE, Ing. Game of Empresa Municipal de Alcantarillado de Guayaquil (EMAG) and the writers focused on the plans for human waste management in the suburban areas, with the thought that biogas plants may be a viable option.

The city of Guayaquil is presently embarking on a research program to determine what course of action to take on human waste disposal, with the assistance of IDBR of Canada. Sewer construction problems in the suburban area is based on the water table conditions which prevail in these low-lying areas. Roads about one meter above grade are constructed through the new housing developments, which results in the creation of a network of blocks of low land upon which houses are built on stilts. During the rainy season these become networks of stagnant ponds surrounding and under the houses.

The course of action planned, as outlined by Ing. Came, is based on a concept of individual household toilets rather than community systems. A three-stage approach is envisioned, with final implementation depending on the results of the research study. In the first stage, cesspools would be used so that the human wastes can be contained rather than spread throughout the lagoons in the blocks between the roads. In the second stage the cess pools would be converted to vaults without overflow, depending on the research results. During this stage the water used in toilets would be minimal, and the vaults would be pumped out intermittently, as required. In the third stage, a street/surface drainage system would be developed. This would allow conversion of the vaults to standard septic tanks, the overflow from which would be carried away by the drainage system.

It appears that individual household biogas plants would be inappropriate for the Suburban Guayaquil areas, but communal units could be used on a selective basis. In this particular instance, the independence of families which is detrimental to community systems may be offset by the comparative poverty of the people. If a community facility were to be constructed, it should be considered a demonstration unit, with the site very carefully selected.

SECTION 8

SUMMARY AND RECOMMENDATIONS

On the basis of extensive field investigations and numerous discussions with government officials, engineers and scientists by the biogas project team during the period of 17 March - 1 April 1981, it is concluded that biogas technology can be implemented in Ecuador to utilize abundant biomass resources available. Possible feedstocks include animal wastes, plant residues and processing wastes, and human wastes and sewage. The largely agrarian economy, warm climate and variable topography generally favor installation of low cost and low maintenance digesters which can provide a valuable energy source in the short term.

It must be recognized, however, that the utility and applicability of biogas technology in Ecuador is very much dependent on specific site conditions, as initial PC/E and INE projects now underway in the country have demonstrated. Digester development in rural areas will be limited to those families with adequate numbers of confined livestock. Installation of community digesters may be limited to locations where close cooperation between all members of the community will resolve the practical issues of operating responsibilities and equitable distribution of gas and digested effluent. Prior to the initiation of any digester project, the feasibility of substituting biogas for conventional fuels must be evaluated.

The existing demonstration units assessed herein provide valuable operating experience and can serve as a means to increase expertise within the country needed to develop a comprehensive and phased government program of widespread

implementation of the technology. The existing units provide a variety of alternative design configurations and are generally operating satisfactorily, although sufficient operating data necessary for a thorough technical analysis are presently lacking. Significant design and construction deficiencies of these units as identified through the site investigations include exclusion of water traps in gas lines, inefficient gas burner design, labor intensive loading requirements, inadequate gas storage, and poorly designed effluent handling systems.

INE is also interested in investigating the possibility of biogas demonstration projects utilizing commercial and human wastes. Unlike rural family sized digesters utilizing animal manures, these applications require pilot scale research and development efforts prior to full scale demonstrations in the field. The potential for improved sanitation with digesters utilizing human wastes makes this application particularly attractive. Large quantities of plant residues and processing wastes in localized areas of the country offer the possibility of displacing significant amounts of oil with biogas within the commercial sector.

Once sufficient data are collected from operation of existing digesters in 1981, an analysis can be made to identify the most promising designs and applications for development over the next 3 to 5 years. An overall implementation plan for the country based on these findings and phased construction programs would then be possible. INE would necessarily serve as the central coordinating agency for these activities. A central component of the implementation plan would be technical training programs to effectively transfer biogas technology throughout the country to where it is needed most. Increasing biogas knowledge and acceptance in many areas is

crucial to the ultimate success of GOE development goals.

In consideration of the above observations, the following recommendations are made.

1. Correction of Deficiencies at Existing Facilities

   To develop the data base needed for future planning efforts, and obtain increased operating experience, deficiencies noted in Section 4, "Assessment of Existing Facilities", should be corrected. These include at one or more sites - installation of water traps in low points of gas lines to drain off moisture; modification of gas stoves to provide more efficient mixing of gas and air and thus a hotter flame; increased gas storage capacity to maintain even gas pressure and minimize leakage; repair of leaks in inadequately sealed digesters; improved effluent discharge and distribution to adjacent cultivated lands; and the development of more reliable operation and maintenance schedules including loading, unloading, cleanout and maintenance of gas lines and steel gasholders (requiring more frequent coating for corrosion protection).

2. Systematic Evaluation of Demonstration Facilities

   After present deficiencies have been corrected, a systematic and orderly data collection program should be undertaken at each operating facility. The focus of these efforts should be to develop design parameters for a number of standardized digester designs that are best applicable to existing conditions in the field. Data must be developed that define optimum operating conditions, including retention time, over a range of temperatures, gas storage requirements based on various consumption patterns, influent feed solids concentrations for various digester d

designs, and loading schedules and mixing of feedstock to enhance gas production. Such data should be collected over a 6-9 month period and will require extensive sampling, close monitoring, and substantial data analysis. INE could best coordinate these activities with the support of PC/E, the Polytechnical Schools, and MAG and/or other government agencies with regional staff.

3. Expansion of Demonstration Facilities

In addition to obtaining valuable data and experience from existing digesters it will be necessary to develop new sites where other studies on commercial and municipal wastes utilization can be undertaken. Typical plants to be included in the present demonstration program are 1) a facility to study the biogas potential from commercially produced plant residues and processing wastes (eg., coffee and cacao hulls and pulp, rice hulls, bagasse, etc.); 2) a municipal sewage pilot plant where concepts such as modified Imhoff tank designs can be evaluated, and 3) a facility to collect and process human wastes generated in areas with little or no sanitation. Again, INE could coordinate these activities, enlisting the aid of the Polytechnical Schools and regional development agencies.

4. Future Implementation Program

Upon collection and analysis of data from existing digesters, an overall implementation plan should be developed in which a phased program of construction is initiated. To provide the required direction for this plan, further analyses should be made to identify the most cost effective digester designs and applications based on the data collected. Social constraints to biogas development should also be addressed. INE in cooperation with other government bodies, regional development agencies

and institutions engaged or otherwise interested in biogas programs, should perform the prerequisite studies and develop the national plan. Successful plan development will be contingent upon generation of an adequate and meaningful data base; therefore, it is imperative that data be collected in a timely manner.

The 3 to 5 year implementation program should be designed to promote widespread adoption of standardized digester technology at appropriate locations. In the first phase of the plan, perhaps 50-100 digesters could be constructed with rural, commercial and human waste applications. It is expected that most will be constructed for families in appropriate rural areas but that 5-10 units will be larger scale facilities. Subsidized construction during this phase similar to the present program will continue to stimulate interest in biogas and provide the means for knowledge of the technology to grow.

Upon review and evaluation of this construction phase, a second phase could begin with a somewhat greater number of digesters constructed, depending on the findings obtained. Partial subsidized construction and expanded technical assistance during the second phase would provide the incentives and support required for a widescale program to develop. Upon analysis of the second phase, INE could then determine what level of financial or technical assistance is needed to achieve GOE desired goals and institute the necessary program.

5. Education and Training

An important component of any program to promote the use of a new technology is a thorough public education program. To satisfy GOE objectives

and promote biogas technology in rural areas and for use by commercial and municipal organizations, it will be necessary to provide adequate information and training. Two related training programs are envisioned - one for governmental and regional agency staff and another for local community members and leaders. Perhaps the best way initially to develop the governmental and local expertise necessary to foster a countrywide biogas plan is to utilize the knowledge and expertise of PC/E personnel and volunteers who now operate many of the existing plants. PC/E could provide training in the fundamentals of anaerobic digestion, and digester design and operation, especially for development in relatively poor rural areas. Other training sessions would be required for commercial or municipal biogas developments which would rely on an effective data base from initial demonstration plants in these areas. INE or other government agency staff would be responsible for providing this technology transfer.

A cadre of GOE staff and local technicians trained in the various biogas applications is crucial to the ultimate success of the implementation plan developed. Trained staff could furthermore prepare and distribute biogas information in the form of easy-to-read operations and maintenance manuals designed for the rural population, commercial interests, and municipal sewage or sanitation facilities operators. Trained local technicians, in cooperation with the various regional development agencies, could assist INE in identifying the areas most suitable for early development efforts and therefore be involved in the program from initial through final stages of development.

APPENDIX A

LIST OF CONTACTS

Name	Organization
Dr. Jack Fritz	USAID
Dr. George Beinhart	USDA-FS
Dr. Harold G. Wahlgren	USDA-FS
Pieter Hoekstra	USDA-FS
Dr. Jean F. Henry	Biomass Consultant
Patricia Moodie	Biomass Consultant
Gary Vaughan	USAID/Ecuador
Paul Fritz	USAID/Ecuador
John Sanbrailo, Dir.	USAID/Ecuador
Dr. Vincent Cusumano	USAID/Ecuador
Kenneth Farr	USAID/Ecuador
Dr. Carlos E. Quevedo, Dir.	INF
Eduardo Yanez	INE
Dr. Eduardo Moran	INE
Dr. Jan Jasiewicz	UN Rep. with INE
Michael Hirsh, Acting Dir.	USPC/Ecuador
Napoleon Cevallos	USPC/Ecuador
Jim Stone	USPC Volunteer
Keith Kline	USPC Volunteer
John Kundert	USPC Volunteer
Daniel Sherrard	USPC Volunteer
Ken Demers	USPC Volunteer

94

Name	Organization
H. Clark Worthley	USPC Volunteer
David C. Bradford	USPC Volunteer
Nelson Cevallos, Dir. M.E.	ESPOL
Marco Pazino, Prof. M.E.	ESPOL
Frowen J. Coppiano, Student	ESPOL
Dr. Marco A. Galvez, Prof. Bio.	ESPOL
Vladimir R. Game, Dir. Research	EMAG
Oswaldo Proano, Prof. M.E.	EPN
Margoth Avila, Student	EPN
Glen Flores, Student	EPN
Ricardo Robalino C.	CRM
Jorge Solis V.	CRM
Edgar Granda	IEOS

APPENDIX B

SUMMARY OF FIELD TRIPS

GUAYAQUIL

On Friday morning, 20 March 1981, the project team flew from Quito to Guayaquil accompanied by Ing. Eduardo Yanez (INE), Gary Vaughan (AID/E) and Ken Demers (PCV). Escuela Superior Politecnica del Litoral (ESPOL) was visited that morning. Empresar Municipal de Alcantarillado Guayas (EMAG), or the Province of Guayas Sewage Authority, was visited and a tour of the underdeveloped suburban areas was made in the afternoon.

At ESPOL, energy conversion technologies such as solar and biogas are studied within the Department of Mechanical Engineering. Nelsen Ceballos is Director of the Department. Although research is conducted in both solar and biogas, there are no courses offered in these areas. Little information on NCE is exchanged with other universities at this time and few professors visit from outside Latin America due to language differences. The cost of education is paid almost entirely by GOE with students contributing perhaps S/300 per school term.

Solar research equipment is located on the roof of the building. Climatic conditions are monitored by various sensing and recording instruments to provide the data necessary to determine the expected life and water heating efficiencies of several inexpensive "dome built" and other commercial flatplate solar collectors. Biogas experiments are conducted outside the building with bench scale digesters, gas storage and stove equipment housed in a nearby covered area. The status of this work is described in Section 4.

Short visits were also made to the various mechanical engineering laboratories (fluids, materials, etc.) and to a research laboratory of the Department of Biology. At EMAG, located adjacent to a major sewage pumping station, the possibility of utilizing digesters to treat human wastes in areas without any sanitation facilities was discussed. This agency is now planning sanitary and storm sewers for sections of the city that were recently formed when houses were built on stilts above flood prone low lying areas. Gravel fill is brought in to form raised roads; there is no sanitary waste disposal, and water must be delivered by truck in these communities (which were toured later in the afternoon).

Although EMAG has considered biogas plants as well as other options for handling human wastes, including latrines, septic tanks and sewers, it has generally been concluded that biogas facilities require greater community participation and therefore have not been highly favored for immediate results in sanitation. No projects have been initiated in the field as of yet, however, and present treatment consists of bar screens, comminutors and outfall to the bottom of the River Guayas. Recovering biogas from modified septic tanks received slightly greater interest since these systems do not involve direct community participation and also the energy value of the gas would offset normal operating costs. Biogas from human wastes and wastewaters is covered in greater detail in Section 7 of this report.

PICHINCHA AND MANABI PROVINCES

The team participated in a road tour of demonstration digesters and potential digester sites located in Pichincha and Manabi Provinces from the morning of Monday, 23 March 1981 through the afternoon of Wednesday,

25 March 1981. Others present for at least part of the trip include Ing. Eduardo Yanez (INE), Gary Vaughan (AID/E), Clark Worthley and John Kundert (PCV's), Margoth Avila (EPN) and a driver employed by AID/E. Digesters visited were Valle Hermoso, Rancho Ronald, El Pueblito, Las Delicias, and Guamani. These are all discussed at length in Section 4 and are not further mentioned here. Other places visited are summarized below.

Centro de Rehabilitacion de Manabi (CRM), the regional development agency attached to El Pueblito and Las Delicias digesters, is primarily involved with the development of large water supply and irrigation projects within the region. CRM is also responsible for the sewage collection and treatment facility serving the city of Portoviejo (population ≈ 60,000). A series of settling lagoons are used for treatment, and these were visited on Tuesday, 24 March 1981 with the several CRM officials involved. The purpose of this visit was to consider the possibility of recovering biogas from the sewage. Essentially, two alternatives were proposed. One method is to cover a portion of the lagoon with a flexible liner, the other is to install a modified Imhoff tank on piped sewage. Both will enable collection of biogas produced from anaerobic fermentation of solid organic wastes. A suburban area close to Portoviejo was visited shortly afterwards, where like at Guayaquil, there is minimal sanitation although water was supplied via pipeline. Several households had latrines. The subject again was the possibility of utilizing biogas plants for treatment of human wastes. As mentioned, all of these opportunities are examined in greater detail in Section 7.

PROVINCE OF IMBABURA

On Saturday, 28 March 1981, the team traveled to the Province of Imbabura with Jim Stone (PCV) and met Ing. Eduardo Yanez (INE), Napoleon Cevallos

(PC/E) and Keith Kline (PCV) in Otavalo. Digesters Iluman and San Cristobal were subsequently visited. Reports on these facilities are given in Section 4.

Attached are representative photographs of a number of digesters and other facilities visited.

FIGURES B.1 - B.4
REPRESENTATIVE PHOTOGRAPHS

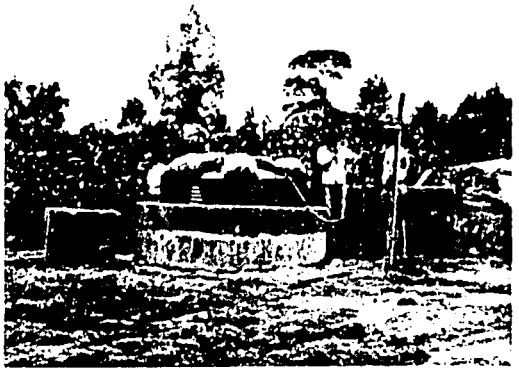

B.1 Digester Guamani
Floating gasholder design
Sand bags used to increase gas pressure.

B.2 Digester Rancho Ronald
Floating gasholder design
Ramp to loading tank.
No gas line installed.

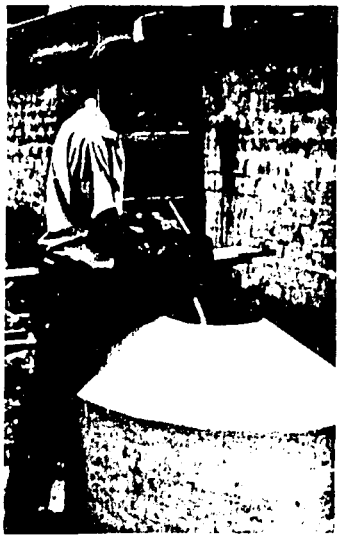

B.3 Newly built batch digester at ESPOL to test digestability of plant residues.

B.4 Original steel digester with separate steel gasholders.

FIGURES B.5 - B.8
REPRESENTATIVE PHOTOGRAPHS

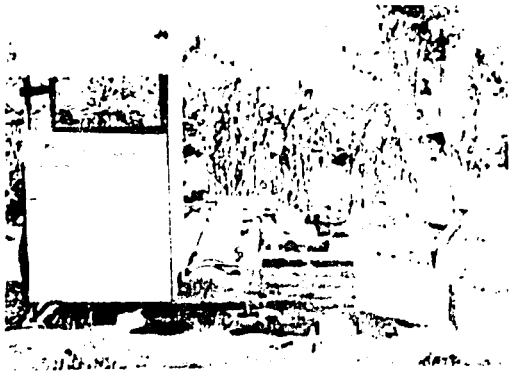

B.5 Digester San Cristobal
Plug-flow design
Latrine and animal wastes combined.

B.6 Digester Iluman
Fixed cover design (with roof)
Longest operating in Ecuador.

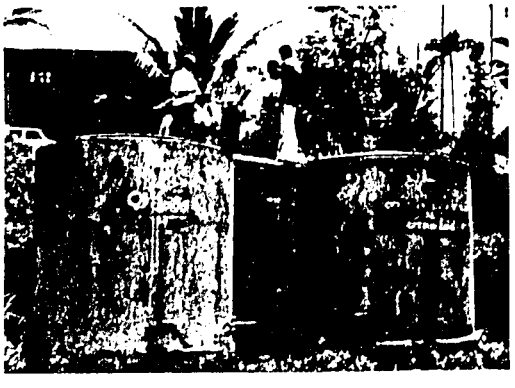

B.7 Digester Valle Hermoso
Twin batch tanks design
Separate floating gas-holder between tanks and house.

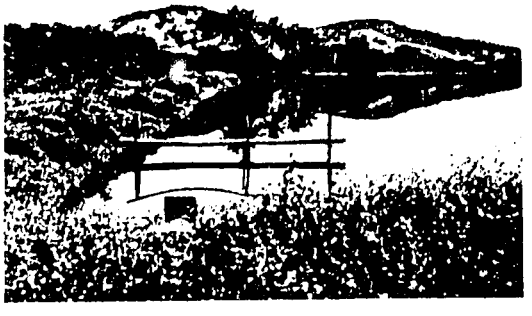

B.8 Sewage treatment lagoon near Portoviejo
Possible biogas source investigated by INE.

APPENDIX C

ECONOMICS OF BIOGAS IN ECUADOR

The economics of biogas plants in Ecuador must be considered from the standpoint of high initial costs of existing designs and the relatively low cost of conventional energy supplies which now prevail. For example, most digesters in Ecuador utilize expensive steel gasholders, accounting for 25-50% of their cost. Also, heavily subsidized kerosene which could be replaced by biogas now costs 5-6 times less than in other countries.

Costs of producing biogas from representative digester designs in Ecuador are estimated in Table C.1. Assumptions made are the following.

1. 10 year economic life
2. 10% interest
3. No savings in manure handling labor
4. No savings in fertilizer purchases

A 10 year economic life of digesters is a conservative estimate based on a service life of 10-15 years. Using a shorter economic life makes the calculated cost of producing biogas more expensive, as the initial capital cost is spread over a fewer number of years. Actually, only the gasholder is estimated to last 10 years, while concrete construction may last 15 years or longer. A more detailed evaluation might use a 20 year life and include the cost of two gasholders in the total outlay.

A 10% interest rate is used to convert initial investment costs into equivalent annual payments. Although less than the present rate of inflation,

TABLE C.1
BIOGAS ECONOMICS COMPARISONS

	Representative Digester Design		
	Plug Flow (small family)	Floating Cover (large family)	Floating Cover (small farm)
Design Gas Production, m^3/day	1.8	3.0-3.5[1]	15.0
Initial Cost, S/.[2]	12,000($400)	28,000($933)	80,000($2667)
Equivalent Annual Amount, S/.[3]	1,954*	4,558*	13,024*
Operating Labor, days/yr	24	24	96
Maintenance Labor, days/yr	6	6	15
Total Annual Labor Cost @ S/.48 per day[4]	1,440*	1,440*	5,328*
Annual Maintenance Materials Cost, S/.	500*	500*	1,500*
Total Annual Cost (sum of*), S/.	3,894	6,498	19,852
Total Monthly Cost, S/.	325($11)	542($18)	1,654($55)
Cost of Equivalent Amount of Fuelwood, S/. per month[5]	141	236-276	-
Cost of Equivalent Amount of Kerosene, S/. per month[6]	58	97-113	486
Cost of Equivalent Amount of LPG, S/. per month[7]	274	456-532	-

(1)The higher amount is based on a conservative estimate of 0.035 m^3/kg raw (undiluted) manure X 100 kg/day (=200 kg diluted 1:1).
(2)S/1 = $0.0333.
(3)Assuming an economic life of 10 yrs and a discount rate of 10%, the capital recovery factor (A/P) = 0.1628.
(4)"Bio-Abono-Gas Project, 1st Interim Report", INE (1981).
(5)Assuming 1.0 m^3 biogas ≈ 4.2 kg fuelwood, and either purchase price or collection labor ≈ S/12.5 per 20 kg, INE (1981).
(6)Assuming 1.0 m^3 biogas ≈ 0.15 gal kerosene, and price ≈ S/2 per liter or US$0.24 per gal.
(7)Assuming 1.0 m^3 biogas ≈ 0.424 kg LPG, and price ≈ S/12 per kg or US$0.40.

a 10% figure was selected since it is likely that GOE will continue to provide incentives for renewable energy development, including subsidies in the form of low interest loans. One thing that a single discount factor is unable to do is to account for costs and benefits that escalate into the future at different rates. For example, the cost of operation of a digester may rise with inflation while the cost saving of non-renewable fuels displaced, such as kerosene, may rise significantly faster as demand outpaces supply. This scenario is highly probable and therefore it is assumed that the 10% rate does not unduly favor the biogas economics. The capital recovery factor for a 10 year life and 10% discount rate is 0.1628.

No savings in manure handling labor requirements were assumed since the biogas plants are constructed mostly for their energy producing value and many manure handling practices remain the same. For example, if cattle are confined overnight to provide a convenient source of manure for a digester, manure handling operations may actually become more complicated as no labor costs were expended to deal with it originally. The effluent may flow by gravity to nearby fields if a slope is available, but perhaps it may require hauling to fields, a disadvantage. This assumption primarily holds true for family scale digesters. On larger farms, normal handling and disposal of large quantities of manure from confined quarters may justify a digester in part due to the manure handling benefits, such as ease of handling and odor or pathogen removal.

No savings in fertilizer purchase was assumed because most families do not purchase inorganic fertilizer, but rely instead on the use of organic plant and animal wastes generated directly on the farm. Again, there may be fertilizer displacement benefits from increased utilization of digested effluent on larger commercial farms, but the economics evaluated herein

apply to the digesters presently in operation which are all relatively small facilities.

The fuels selected for comparison to biogas are those that it would compete with directly for home cooking purposes - fuelwood, kerosene, and liquefied petroleum gas (LPG). Of these, kerosene is by far the least costly due to heavy GOE subsidy. Kerosene costs approximately S/2 per liter or US$0.24 per gal in Ecuador, compared to about US$1.30 per gal in the United States (March 1981) where prices are not controlled. Costs of obtaining fuelwood supplies by either purchases or gathering are estimated by INE to be about the same amount, S/12.5 or US$0.42 for 20kg. LPG costs approximately S/12 per kg or US$0.40 in Ecuador, equivalent to current costs in the United States, and is considerably more expensive than both kerosene and fuelwood for the same heating value. In the United States, where the price of petroleum based fuels is not controlled, LPG costs less than kerosene per gal (US$0.80 vs US$1.30), although on an equivalent heating value basis, these fuels are comparably priced. If kerosene subsidies were reduced to the level of gasoline, S/4 per liter or approximately US$0.50 per gal, then kerosene would cost only slightly less than fuelwood.

To bring biogas costs in line with fuelwood, either fixed or operating costs must fall, or the cost of fuelwood must rise. Both of these trends are anticipated. Assuming an improved design, a 3.5 m^3/day plant costing S/21,000 initially and discounted over 10 years @ 10% (and costing S/1,940 annually for operation and maintenance as before) total monthly costs amount to S/447. This is presently 60% greater than the cost of an equivalent quantity of fuelwood at S/276 per month. If the noted improvements in initial cost can be made, and the cost of fuelwood rises by the noted amount, biogas

facilities of this scale may become competitive without subsidy, other than loans. However, the efficiency of wood burning stoves is also being improved and certain models now, such as the Lorena, consume 25-50% less wood than open burning.

To improve the economics of larger scale digesters, the same relative cost reductions may be required, although other credits in addition to gas production may benefit the overall picture. For example, if manure disposal is normally labor intensive, as in a milking stable, then the labor required for digester loading may not amount to any additional work. This operating requirement can account for 20% of the total digester cost including annualized capital costs.

Indirect benefits of biogas plants include the following.

1. Renewable - Biogas is derived from renewable supplies of organic waste materials as opposed to oil and gas derived from non-renewable fossil fuels. As Ecuador's production of petroleum tapers off in the 1980's, the country will become increasingly dependent on imported supplies at world prices. The benefits of biogas will then be most apparent as alternative sources of fuel become too scarce or expensive.
2. Environmental/Sanitary - Anaerobic digestion eliminates much of the pollution potential of animal and human wastes by reducing BOD and loss of nitrogen. It also improves sanitation by reducing pathogenic organisms and offensive odors. If biogas displaces wood, valuable forest resources are preserved and cooking is cleaner.
3. Socioeconomic - By displacing imported energy and relying on community based resources, biogas helps to support local economies and social welfare programs aimed at improving the self-sufficiency and productivity

of the relatively poor.

For the above reasons it is prudent to identify and develop biogas technology now that is appropriate to the needs of specific groups and conditions throughout the country. Although the economics are not favorable at present, biogas offers a renewable energy supply and the prospect of an independent and stable rural economy. Continual GOE support is encouraged.

BIBLIOGRAPHY

Beinhart, G. and Henry, J.F., "Biomass for Energy in Ecuador - An Assessment", U.S. Department of Agriculture, Office of International Cooperation and Development (1981).

Bente, P.F., editor, The Bio-Energy Directory, The Bio-Energy Council, Washington, D.C. (1980).

Compost Science/Land Utilization, editor, Biogas and Alcohol Fuels Production, Proceedings of a Seminar on Biomass Energy for City, Farm, and Industry, The JG Press, Inc., Emmaus, PA (1980).

Donahue, J.D., "Workbook, Quantitative Procedures and Applications - Cost Benefit Analysis and Project Design", U.S. Agency for International Development and PASITAM, the Program of Advanced Studies in Institutional Building and Technical Assistance Methodology of MUCIA, the Midwest Universities Consortium for International Activities.

Ecotope Group, "Report on the Design and Operation of a Full Scale Anaerobic Dairy Manure Digester", prepared for the U.S. Department of Energy, Division of Solar Technology, Fuels from Biomass Systems Branch, Contract No. EG-77-C-06-1016 (1979).

Grant, E.L. and Ireson, W.G., Principles of Engineering Economy, 5th Edition, The Ronald Press Company, New York, NY (1970).

House, D., The Compleat Biogas Handbook, At Home Everywhere, Aurora, OR (1978).

Humbles, E. and Dillon, R., "The Quilanga Methane Gas and Fertilizer Plant", United States Peace Corps (1979).

Instituto Nacional De Energia (INE), "Bio-Abono-Gas Project, 1st Interim Report", prepared for Volunteers in Technical Assistance (VITA) under grant agreement No. 90075, Quito, Ecuador (1981).

Klass, D.L., Chairman, Symposium Papers, Energy from Biomass and Wastes, Institute of Gas Technology, Chicago, IL (1978).

Maramba, Felix D., Biogas and Waste Recycling, The Philippine Experience, Maya Farms Division, Liberty Flour Mills, Inc., Metro Manila, Philippines (1978).

Metcalf and Eddy, Inc., Wastewater Engineering, Collection, Treatment, Disposal, McGraw-Hill Book Company, New York, NY (1972).

National Academy of Sciences, Methane Generation from Human, Animal and Agricultural Wastes, prepared for U.S. Agency for International Development, Washington, D.C. (1977).

Sathianathan, M.A., Bio-Gas Achievements and Challenges, Association of Voluntary Agencies for Rural Development (AVARD), New Delhi, India (1975).

Shuster, W.W., editor, Proceedings, Second Annual Symposium on Fuels from Biomass, Renssalaer Polytechnic Institute, Troy, NY, Supported by U.S. Department of Energy (1978).

Taylor, T.B. and Associates, "Survey of Biomass Energy Programs and Use in the Developing Countries", prepared for the Office of Technology Assessment (1979).

U.S. AID/Ecuador, "Country Development Strategy Statement (CDSS), FY1982-FY1986" (1980).

U.S. AID/Ecuador, "Project Identification Document (PID), Alternative Energy Sources" (1980).

U.S. AID/Ecuador, "Project Paper, Alternative Energy Sources" (1981).

U.S. AID/Ecuador, "Update of the Country Development Strategy Statement (CDSS), FY1982-FY1987" (1981).