PN-AAR-696 37901

# A.I.D. Office of Health Technology Transfer Workshop

April 19-20, 1983

Westpark Hotel, Rosslyn
Arlington, Virginia

| | DAY ONE | DAY TWO | |
|---|---|---|---|
| 9:00* | Opening Statements & Objectives | Summary Report on TIBs Review | * 9:0 |
| 9:15* | Presentation of Concepts & Definitions | Discussion of TIBs Summary Report | * 9:1 |
| 9:30* | Hardware and Software Aspects | Presentation of 2 Handpump Cases Dominican Republic and Indonesia | * 9:3 |
| 9:45# | Group Discussions of Technology Transfer | Group Discussions of Cases | #10:0 |
| 10:15* | Summarize Group Discussions | | |
| 10:30 | Break | | |
| 10:45* | Introduce Technical Information Briefs | | |
| 11:00# | First Round of Group Technical Information Briefs (TIBs) Review | Group Presentations - Dominican Republic Case | *11:3 |
| | | Group Presentations - Indonesian Case | *12:0 |
| 12:30 | Lunch | Lunch | 12:3 |
| 1:30# | Second Round of Group TIBs Review | Presentation of Actual Case Results | * 1:3 |
| | | Synthesis of Case Lessons | * 2:1 |
| 2:30* | Presentations of TIBs Group Discussions | Group Summary Sessions on Workshop | # 2:30 |
| | | Presentations and Discussion of Group Summaries for Final Summary of Workshop | * 3:30 |
| 4:30 | | | 4:30 |

* Plenary Session
\# Group Sessions

WASH/CIC
4/1/83

# TECHNOLOGY TRANSFER IN WATER SUPPLY AND SANITATION

April, 1983

WASH/CIC

## TABLE OF CONTENTS


| | | Page |
|---|---|---|
| 1. | HEALTH ASPECTS | 1 |
| 2. | INTERNATIONAL DRINKING WATER AND SANITATION DECADE | 1 |
| 3. | CONCEPT OF TECHNOLOGY TRANSFER | 2 |
| 4. | HARDWARE -- LOW-COST TECHNOLOGY | 2 |
| 5. | SOFTWARE | 3 |
| 6. | SELF-RELIANCE | 4 |
| 7. | INSTITUTIONAL DEVELOPMENT | 6 |
| 8. | RESEARCH | 6 |
| 9. | INTERSECTORIAL APPROACH | 8 |
| 10. | MANUFACTURE AND MARKETING | 8 |
| 11. | WORKSHOPS | 8 |
| 12. | TECHNICAL INFORMATION BRIEFS | 10 |
| 13. | INVITEES | 11 |
| 14. | REFERENCES | 12 |
| 15. | ANNEX I - FLOW CHART OF GENERAL SEQUENCE OF PHASES FOR MANUFACTURING AND MARKETING OF WS&S DEVICES | 13 |
| 16. | ANNEX II - BAR CHART OF GENERAL SEQUENCE OF PHASES FOR MANUFACTURING AND MARKETING OF WATER SUPPLY AND SANITATION DEVICES | 14 |

# TECHNOLOGY TRANSFER IN WATER SUPPLY AND SANITATION

## 1. HEALTH ASPECTS

Waterborne or water-related diseases are among the three major causes of sickness and death and contribute to high infant mortality, low life expectancy and a poor quality of life. Such diseases can be prevented if people are provided with a safe drinking water supply and facilities to dispose of wastes.

For more than a thousand million people in the developing countries water supply and waste disposal facilities are either totally absent or so inadequate that even the most rudimentary public hygiene is impossible.

A study conducted at the beginning of the present decade showed that only slightly more than one-quarter of the third world population has adequate supply and waste disposal systems.

## 2. INTERNATIONAL DRINKING WATER AND SANITATION DECADE

This need for basic sanitation services has been recognized by the Governments of the World as they embark on the ambitious program to provide water supply and sanitation services to as many people as possible during the decade of the '80's. This decade effort is part of the global strategy to make health services available to all by the year 2000.

In implementing the water and sanitation decade activities, special emphasis is being given to rural and under-served areas including the large squatter settlements around urban centers. It is the poor in these areas that suffer the most from the absence of basic sanitation services because they lack not

only the means to provide the facilities but also information on how to minim the il' effects of the insanitary conditions in which they live. As a resu the debilitating effects of insanitary living conditions lower the product potential of the very people who can least afford it. Consequently, there few development projects that have a greater potential for directly benefitt the health, social and economic well-being of people then the provision of wa supply and sanitation services.

## 3. TECHNOLOGY TRANSFER CONCEPT

Although many people are familiar with the term technology transfer there is completely reliable conceptual base to orient and guide program activities developing and developed countries. A growing number of development experts national policymakers are questioning the wisdom of massive technology transf from industrialized countries to the developing nations. The capital-intens technologies they generate usually are very costly relative to the income local populations because they require an extensive educational and industr infrastructure which takes decades to build-up. The need is more to enhance effective and efficient utilization of available resources in developing countr and to promote the use of low-cost technologies that are "appropriate" to social, cultural and economic context in which they are applied. Equal, and some cases, more attention must be given to the so-called software aspects rela to information, knowledge, experience, education and institutional capabili

## 4. HARDWARE -- APPROPRIATE TECHNOLOGY

There is no widely accepted definition of appropriate technology. For our purpo we may consider appropriate technology as a method or technique which is compati with existing social, cultural, and economic conditions; is understood by users; is simple but effective and adaptable to the life style of the communi

is labor rather than capital intensive; permits the use of locally available material; favors local industry, and is easy to apply and maintain.

Devices and equipment with these characteristics does not mean sophisticated or modern versus simply basic technology. The determination of which to use should be based on the specific circumstances and need rather than on the attitude of some among the educated and elite in developing countries that feel only the "best available" technologies should be used because in their opinion, simple, low-cost technology is second best or inferior. In fact, these ideas must be dispelled because for those poor people in rural areas low-cost technology represents a giant step forward in meeting their basic needs for food, health, energy and shelter.

As a consequence, there is need to identify, develop and improve on various, low-cost sanitation technologies appropriate to local conditions in developing countries with the emphasis in improving health rather for user convenience.

5. SOFTWARE

The delivery of appropriate technology to the rural poor is comparatively more important than the technology (hardware) itself. Many times what is identified as a disadvantage in certain appropriate technologies is actually related to the software aspects because the difficulty for example, is usually in the social processes which lead to an adoption or rejection of a particular technology. For these and other reasons, the success of many foreign-aid programs can be traced to their intimate knowledge of local conditions and less on the hardware developed. As Dr. David Bradley of the Ross Institute of Tropical Hygiene has stated "No matter how much we have learned about the engineering details of alternative sanitation systems and the related health aspects, unless these findings can be

translated to the target population in a way they can understand and accept, this is mostly an academic exercise."[1]

Other constraints which prevent the benefits of improved sanitation services from reaching marginal populations is the lack of information and trained personnel. Often the result is non-use, mis-use, and poor maintenance of existing facilities. Also, in many cases, this situation exists because technical people in developing and developed countries are not trained to consider or design alternative systems nor to evaluate the impact of these alternatives on health.

The process of selecting the appropriate technology should begin with an examination of all the alternatives available. There are the technologies that can be readily excluded for technical or social reasons and others that may be costly to develop and to maintain. Since the benefits of various technologies are difficult to quantify an acceptable approach is to identify the environmental factors that are the vehicle of disease and to recommend improvements that can prevent the transmission of disease. Those technologies that survive these tests are then presented to the community with the price tag, and the users themselves decide what they are willing to pay for.

## 6. SELF-RELIANCE

Another factor to be considered in determining the potential uses of appropriate technologies is whether they can be incorporated into the concept of self-reliance that developing countries are now striving to achieve - i.e., economic independence on the basis of mutual cooperation and equal partnership. This is being referred to as technical cooperation among developing countries (TCDC) and is the cornerstone of the new economic order being advocated by developing countries. Stated

---

1 The World Bank Seminar on Appropriate Technology, January, 1978.

another way, developing countries are trying to reduce their technological dependence on industrialized countries. As such they are seeking to promote the use of local materials and resources and thus may begin resisting imported technology, particularly if it is costly.

Also, with regard to costs, it must be remembered that many of the least developed countries of the world are in serious economic difficulties and therefore do not have the ability to shoulder further debt burdens. There is also the question of balance of payments, - i.e. availability of foreign currencies--particularly dollars. If initial equipment installations and later spare parts or replacements must be obtained from abroad and paid in dollars, there is a good chance that such "imported" technology may receive little support unless some mechanism is found to convert local currency to dollars.

This situation was recognized by a National Academy of Sciences panel in its review of the AID Health strategy. The report[2] indicates: "The underlying objective of the AID health program is to bring about self-reliance within the countries themselves. Hence, AID provides financial and technical assistance where there are deficiencies over the near term, anticipating that ultimately these countries will have the necessary human and economic resources. Within the last decade there has been a quantum leap in the amount of qualified talent, experience, and adroitness existing in the developing world. If, in the next decade, AID provides opportune assistance with the development and application of effective low-cost technologies, and with the further advancement of host country capabilities, perhaps the U.S. can make a major contribution toward another giant step forward within the next ten years."

---

2 Review of the AID Health Strategy, A Committee Report, National Academy of Sciences, Institute of Medicine, September 1978.

## 7. INSTITUTIONAL DEVELOPMENT

The development and strengthening of national institutions will make it possible to increase a countries' absorptive capacity and make international aid more meaningful. Such institutions could undertake broad-based applied investigations either nationally or on a regional basis to complement imported technology. In addition, such national institutions eventually could be developed to serve as a focal point for the exchange of information which is so vital in any technology transfer program. This will make it possible to disseminate information in order to share experiences and knowledge and avoid unnecessary duplication, among other benefits.

Another approach to institutional development may be to establish a network of collaborating institutions on a regional basis. Such networks would be made up of institutions from developed and developing countries, as well as International Centers each complementing the other in different facets of information exchange, training and research. It would include also institutions with strong capabilities and resources along with others in a lesser stage of development. The approach would be for the more developed to assist the less developed.

## 8. RESEARCH

The research component of technology transfer raises the question of the role to be assumed by a donor agency like AID. A Brookings Institution Report[3] indicates that an agency primarily responsible for extensive field operations would find difficulty in administering a research program. It states: "The principal functions of the group administering research would be: to determine research priorities and encourage development oriented research; to establish peer review

---

[3] An assessment of Development Assistance Strategies (an internal report). The Brookings Institution, 1977. pp. 24-30.

of research proposals and project performance; to stimulate the involvement of U.S. universities and other research oriented institutions; to support research training and institution building abroad; and to synthesize and disseminate research findings so that the continuously expanding body of knowledge is systematically organized and made available."

The panel points out further that while research should be an important component of an international agency's program, an administrative framework should be established to ensure that research is performed effectively and in a way that will stimulate innovation in developing countries.

This innovative stimulus should be from below rather than "growth from above" which usually dominates the practice of development as stated by Nicolas Jequier of OECD: "The function of foreign assistance should not be merely to introduce a new piece of technology, attractive as it may be, but to help initiate, within the receiving community, a process of innovation and self-sustaining growth.[4]

With careful linkages to the technical and scientific expertise available in the U.S. health, social science and engineering communities, there are opportunities for AID to make an even more significant contribution to improving health in the countries in which it operates. The underyling challenge to AID is to develop ways whereby the people who have the problems--those in the developing countries--can be brought together with those who may be able to assist with developing solutions. It must be kept in mind that the users of a "product" must be made a part of the process by which corrective measures are identified, designed and constructed so that they will participate in the long operation and maintenance of the systems.

---

[4] Appropriate Technology--Problems and Promises, Part 1, Major Policy Issues by Nicolas Jequier, Developing Center of the OECD.

## 9. INTERSECTORIAL APPROACH

The approach also must be intersectorial because the effects of environmental sanitation measures are inextricably linked with nutrition, population and other health related factors. The involvement of other disciplines is necessary both for technology development and in the critical software aspects of delivery.

## 10. MANUFACTURE AND MARKETING

An international aid agency should also concern itself with building up individual entrepreneurs in developing countries, i.e. those who will undertake to manufacture low-cost technology products.

The experience of various technology transfer groups is that individual entrepreneurship is an effective channel of innovation in appropriate technology and it is up to these groups to provide incentives and create the cultural and psychological conditions for their development. Also, they must help to introduce new ideas, new forms of knowledge and new ways of doing things with the expectation that this will help build up within a country the manufacturing and marketing capabilities which may ensure the widespread diffusion of low-cost appropriate technology.

## 11. WORKSHOPS

The various aspects of technology transfer identified are worthy of further in-depth discussion. At a two-day workshop to be held April 19-20, 1983, AID will provide the framework to discuss in a general way some of these basic issues and an examination of various categories of low-cost technologies to determine which appear to be most promising and worthy of further development. The latter has been an activity supported by USAID for several years. The following background will help to facilitate this part of the discussion.

To further the development and transfer of WS&S technologies appropriate to the needs of developing countries, AID has arranged to collect and analyze relevant information on five categories of technologies, for which there are potential requirements at the household and community/village level. The five categories of technology are:

- Water treatment equipment
- Well drilling and screening equipment
- Water lifting devices
- Water flow controls
- Household sanitation devices

A select group has identified and reviewed a number of these technologies and devices in each category for further intensive analysis. This has resulted in the preparation of descriptions of selected technologies and a set of Technical Information Briefs (TIBs) which have been classified into one of the following phases of manufacturing/marketing development:

A. an innovative device in the prototype stage that merits further development and evaluation prior to possible manufacturing and marketing;

B. a device in limited use, being manufactured and marketed on a small scale, but deserves widespread publicity and promotion to bring its benefits to many more people;

C. a device that is widely manufactured but also needs extensive marketing and efforts. (See list of technologies following on page 10).

In a further analysis, the three phases have been broadened into a ten phase developmental sequence of manufacturing and marketing. This is outlined in Annex I. Annex II is a barchart indicating estimated sequences of manufacturing and marketing phases of development of several water supply and sanitation devices. It should be noted that the principles of a technology may be embodied in different kinds of devices--in water treatment for example--and these devices may be in different phases of the sequence in different countries, both developed and undeveloped. This may indicate an opportunity for technology transfer or acceleration of the development sequence.

# TECHNOLOGY INFORMATION BRIEFS

## Water Treatment

Portable Filter Intakes-B
Nalgonda Defluoridation Process-B
Bone Meal Defluoridation Process-B
Iron Removal Units-B
DELBUOY Seawater Desalting System-A
Home Water Treatment Disinfection and Storage/Dispensing-A

## Well Drilling and Screening

Auger Drilling-C
Jet Drilling-C
Cable Tool Drilling-C
Roboscreen-B

## Water Lifting Devices

Indian Mark II Handpump-B
AID Hand-Operated Water Pump-B
Moyno Rotary Handpump-B
Hydraulic Water Ram-B
Siphon Activated Hydropneumatic Pump (SAHP)-A

## Water Flow Controls

Robovalve-B
"Fordilla" Automatic Closing Water Valve-B

## Household Sanitation

Pour-Flush, or Water-Seal, Latrines-C

A. an innovative device in the prototype stage that merits further development and evaluation prior to possible manufacturing and marketing;

B. a device in limited use, being manufactured and marketed on a small scale, but deserves widespread publicity and promotion to bring its benefits to many more people;

C. a device that is widely manufactured but also needs extensive marketing and efforts.

The technologies listed in the sequential chart are described in the Technical Information Briefs attached.

Objectives of Workshop: The objective of the workshop will be to consider the characteristics, components and basic issues involved in developing an understanding and conceptual approach to technology transfer along with a review of the pros and cons of various low-cost easily maintained water and sanitation devices that have the potential to be manufactued locally in developing countries.

12. INVITEES

The invitees to the workshop include key individuals within AID, international agencies and others concerned.

## 13. REFERENCES


1. Appropriate Technology for Water Supply and Sanitation, Sociocultural Aspects of Water Supply and Excreta Disposal by Mary Elmendorf and Patricia Buckles, World Bank, December, 1980.

2. Review of the AID Health Strategy, A Committee Report, National Academy of Sciences, Institute of Medicine, September, 1978.

3. An Assessment of Development Assistance Strategies (an interim report) The Brookings Institution, 1977.

4. Appropriate Technologies: Problems and Promises, Part 1, The Major Policy Issues by Nicolas Jequier, Development Center of the OECD.

5. Appropriate Technology for Water Supply and Sanitation, A Planners Guide by John Kalbermatten, De Anne S. Julius, D. Duncan Mara and Charles G. Gunnerson.

6. Water Supply and Waste Disposal Poverty, and Basic Needs Series, September 1980 World Bank Document.

7. Strategies for Extending and Improving Potable Water Supply and Excreta Disposal Services During the Decade of the 1980's, PAHO Scientific Publication No. 390, Technical Discussions of the XXVI Meeting of the Directing Council of PAHO, 1979.

GENERAL SEQUENCE OF PHASES FOR MANUFACTURING AND MARKETING OF WS&S DEVICES

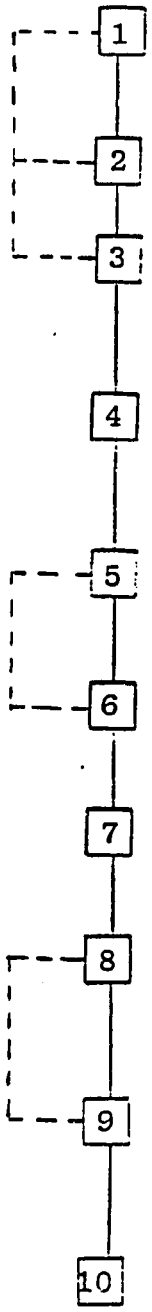


1. Concept of device to satisfy existing need

2. Working or lab models

3. Production prototypes

4. Software preparation for field testing: organization, finance community education and partici pation, logistics, marketing planning, etc.

5. Field testing of hardware and software

6. Modification of hardware and software and retesting as requi

7. Preparation for first stage introductory production and marke

8. First stage production and marketing

9. Evaluation of first stage introductory operations and their modification for second stage production and marketing

10. Second stage production and marketing

Solid lines are action flows
Dotted lines are illustrative information feed back flows to improve iterative actions

Note: phases may overlap in time

ANNEX II

GENERAL SEQUENCE OF PHASES FOR MANUFACTURING AND MARKETING OF WATER SUPPLY AND SANITATION DEVICES

| TECHNOLOGIES | 1. Concept of Device | 2. Laboratory Model | 3. Production Prototype | 4. Software Preparation | 5. Field Testing | 6. Modification and Retesting | 7. Preparation 1st. Stage Production and Marketing | 8. 1st Stage Production and Marketing | 9. Evaluation, Modification of 1st Stage | 10. 2nd Stage Production and Marketing |
|---|---|---|---|---|---|---|---|---|---|---|
| **Water Treatment Devices** | | | | | | | | | | |
| 1.1 Portable Filter Intakes | | | | | | | | | | |
| 1.2 Nalgonda Defluoridation | | | | | | | | | | |
| 1.3 Bone Meal Defluoridation | | | | | | | | | | |
| 1.4 Chlorine Generation | | | | | | | | | | |
| 1.5 Seawater Desalting | | | | | | | | | | |
| 1.6 Household Water Treatment Disinfection, Storage Unit | | | | | | | | | | |
| 1.7 Iron/Mang. Removal | | | | | | | | | | |
| **Well Drilling and Screening** | | | | | | | | | | |
| 2.1 Manual Auger Drilling | | | | | | | | | | |
| 2.2 Jet Drilling | | | | | | | | | | |
| 2.3 Cable Tool Drilling | | | | | | | | | | |
| 2.4 Roboscreen | | | | | | | | | | |
| **Water Lifting Devices** | | | | | | | | | | |
| 3.1 India Mark II Handpump | | | | | | | | | | |
| 3.2 AID Handpump | | | | | | | | | | |
| 3.3 Moyno Rotary Handpump | | | | | | | | | | |
| 3.4 Hydraulic Ram | | | | | | | | | | |
| 3.5 Syphon Activated Hydropneumatic Pump | | | | | | | | | | |
| **Water Flow Controls** | | | | | | | | | | |
| 4.1 Robovalve | | | | | | | | | | |
| 4.2 Fordilla | | | | | | | | | | |
| **Household Sanitation** | | | | | | | | | | |
| 5.1 Pour-flush of Water Seal Latrine | | | | | | | | | | |

Current phase of technology in less developed countries
Current phase of technology in developed countries

# TECHNOLOGY INFORMATION BRIEFS


Water Treatment — Tabs

Portable Filter Intakes ..... 1
Nalgonda Defluoridation Process
Bone Meal Defluoridation Process
Iron Removal Units
DELBUOY Seawater Desalting System
Home Water Treatment Disinfection and Storage/Dispensing Unit

Well Drilling and Screening

Auger Drilling ..... 2
Jet Drilling
Cable Tool Drilling
Roboscreen

Water Lifting Devices

Indian Mark II Handpump ..... 3
AID Hand-Operated Water Pump
Moyno Rotary Handpump
Hydraulic Water Ram
Siphon Activated Hydropneumatic Pump (SAHP)

Water Flow Controls

Robovalve ..... 4
"Fordilla" Automatic Closing Water Valve

Household Sanitation

Pour-Flush, or Water-Seal Latrines ..... 5

# Portable Filter Intakes

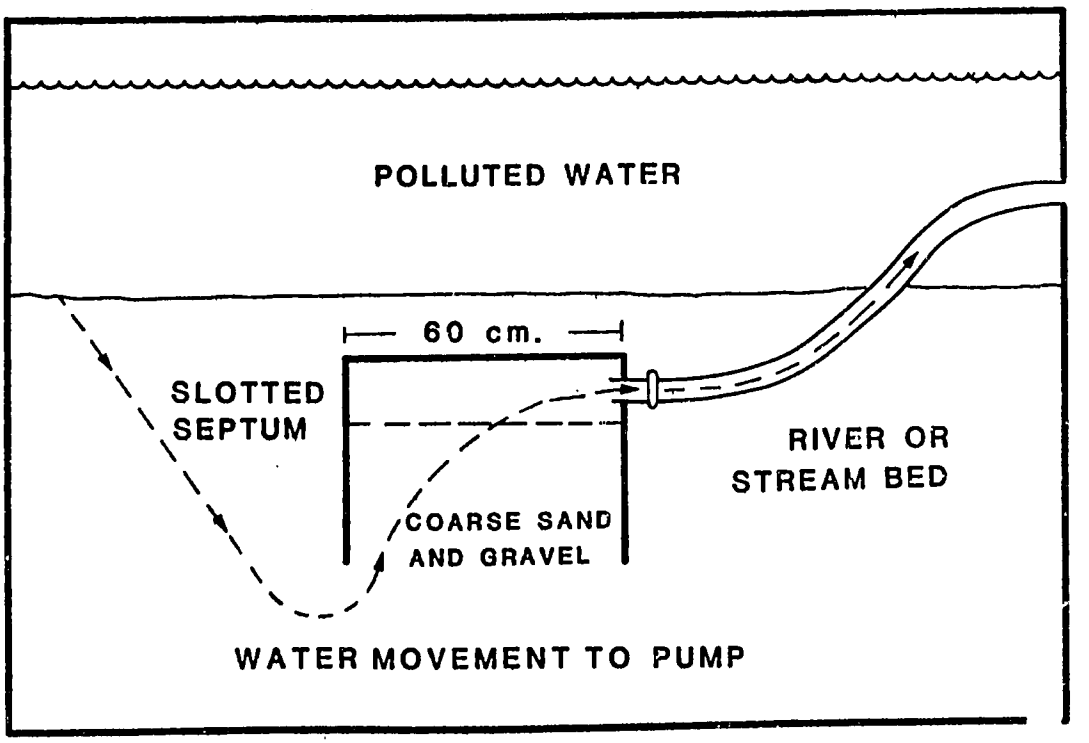

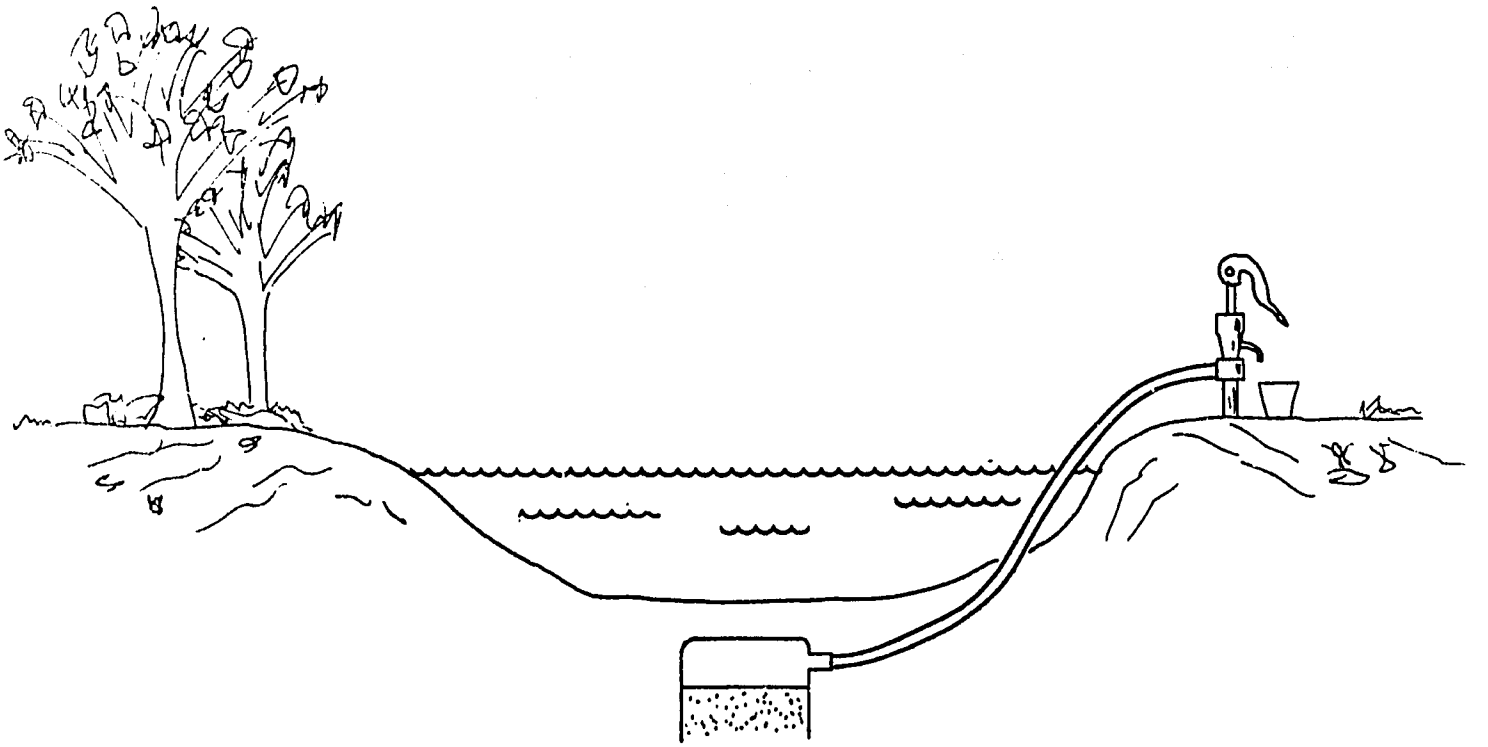

TECHNOLOGY INFORMATION BRIEF

1. Name of Technology: Portable Filter Intakes.

2. Purpose: To convert small areas of lake or river beds into low-maintenance sand filters, thus facilitating the supply of water of good bacteriological quality from such surface water sources.

3. Stage of Development: Commercial units have been in use in Africa, Indonesia, and south America for over two years. One manufacturer, SWS Filtration Ltd. (England), has working units in the Philippines, Singapore, Malaysia and Thailand. The manufacturer is in the process of making modifications for operation in different conditions. The SWS village unt together with hand pump, armored hose, digging tool, and necessary fittings cost $450. They also make a smaller "camp unit" which costs $230.

4. Physical Description: The filter is a rectangular box of corrosion-free fiberglass with a false ceiling consisting of a compression-molded slotted plate. The unit is buried open-end-down in a lake or river bed. The SES village unit (cross section 30x60 cm) weights about 8 Kg.

5. How Does It Operate/Function: Installation is simple, involving only the burying of the filter in the lake or river bed. Generally the larger units require no attention after installation; there are no moving parts and chemicals or filter media are not needed. The units make use of the existing sands and gravels of the lake or river bed. If used under a body of still water such as a reservoir or lake there is a danger that the bed may be clogged in time so that the filter would have to be moved to another position. SWS also manufactures a mini-unit which, in the absence of a sandy bed, can be placed in a steel container filled with gravel and covered with permeable mats. With these units, the gravel and mats must be cleaned and replaced about every three months, and sludge removal is required. Low-level technical staff of local water authorities can be trained easily and rapidly in the installation of the unit.

6. How Can It Be Made? The SWS type can be made in the rudimentary fiberglass workshops found in some developing countries. Adaptation to locally available material, such as ferrocement or asbestos cement, should be simple. The units could thus be manufactured in all developing countries.

7. What Is The Market? The potential market is enormous since it includes all communities where surface water is readily available. The unit is particularly useful for temporary use (as in emergencies) as it can later be removed and installed elsewhere.

8. Case History Highlights: SWS Filtration Ltd. has working units in the Philippines, Singapore, Malaysia, Indonesia, Thailand, South America, and

Africa which have shown success for two years usage in 1) reducing suspended solids concentration to about 2 mg/l; and 2) reducing the concentration of bacteria by about 98%.

9. Advantages and Disadvantages: The technology has wide applicability in permanent and emergency settings for producing high quality water in rural areas of developing countries. The capital costs of the unit are low (about $2 per capita), and it can be easily adapted for inexpensive local manufacture. Operation is simple and requires neither regular attention nor supplies of parts or chemicals. If the unit is installed under a briskly-flowing stream it may get washed out after heavy rain. The outside bends of streams are often appropriate areas in which velocities are low and sand/gravel deposits are likely to be found. If used under a body of still water, there is a danger that the bed may become clogged requiring periodic relocation of the filter.

Address for Further Information:
SWS Filtration Ltd.
(Attn. Mr. G. S. Carsdale, Director)
Great Chesterford
Saffron, Walden, Essex CB10 1PL
England

# Nalgonda Defluoridation Process

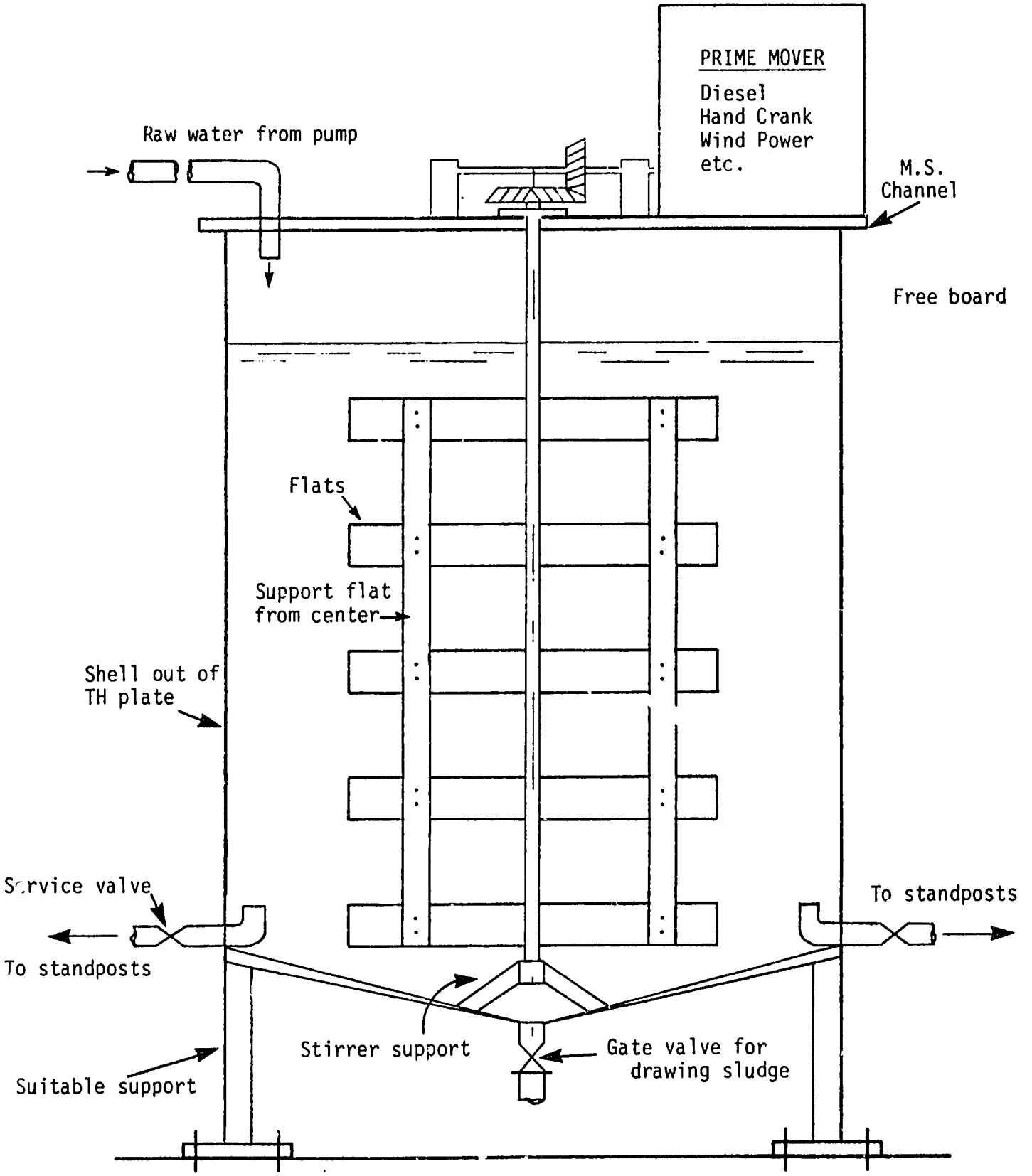

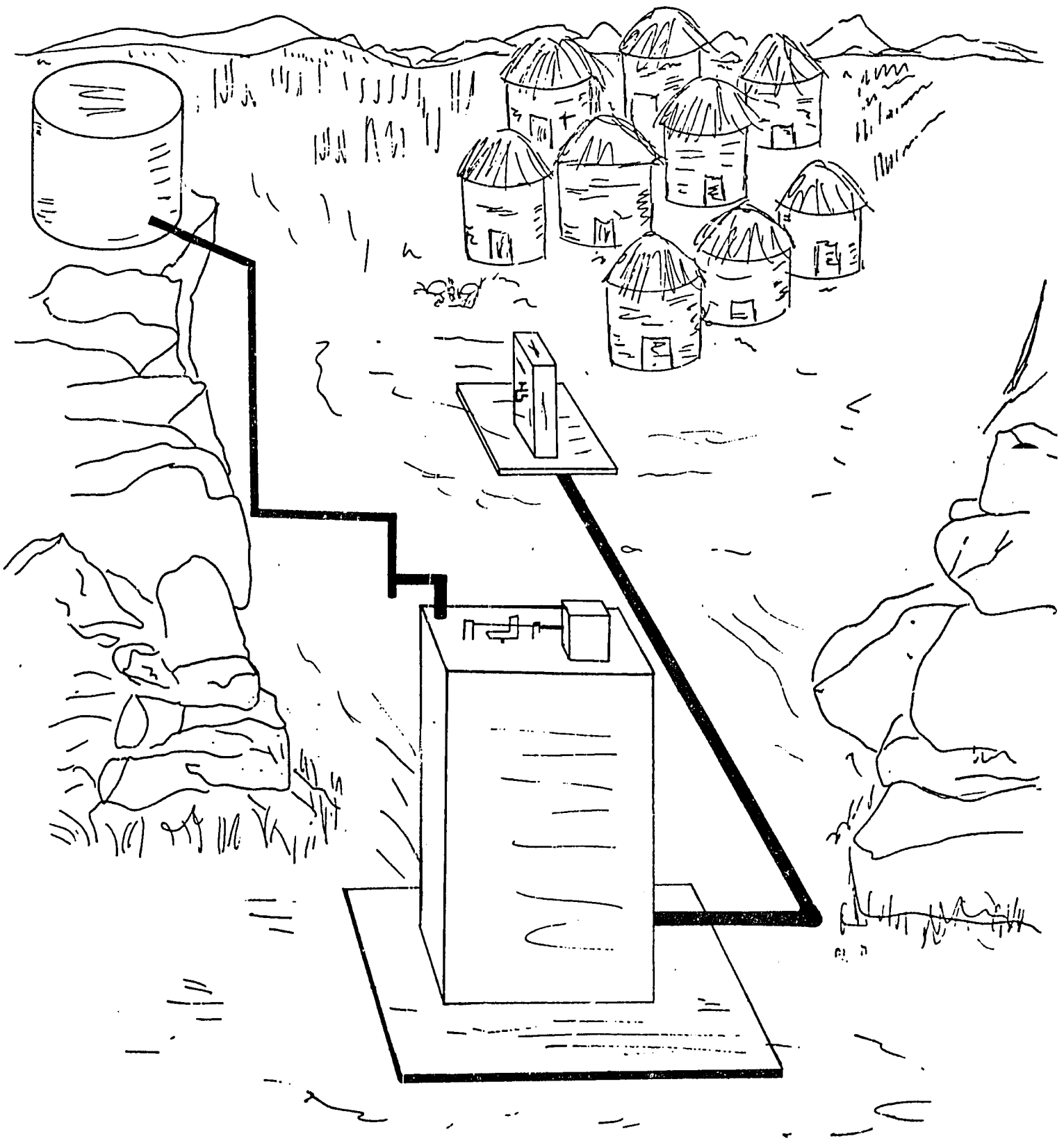

TECHNOLOGY INFORMATION BRIEF

1. Name of Technology: Nalgonda Defluoridation Process.

2. Purpose: To remove the excess concentrations of fluorides which are present in some groundwaters, thus preventing dental fluorisis in children and, in some cases, even skeletal damage in children and adults who use the water.

3. Stage of Development: The technique has been in use in the field since 1975 and has been used in various defluoridation programs in central India since then. Both domestic and community units have reportedly been developed.

4. Physical Description: The method consists of the addition in sequence of lime, bleaching powder, and filtered alum to the fluoride water, followed by flocculation, sedimentation and filtration. UNICEF describes the treatment units as being "very simple".

5. How Does It Operate /Function? Available information suggests that the units come in the form of package plants, implying that installation is simple in principle and units are small conventional water treatment plants. Operation involves pH control, dosing control, sediment removal and backwashing of filters. Thus, it is difficult to ensure both the necessary supply of chemicals as well as the necessary attention at the village level. Operators of each plant would have to receive substantial training.

6. How Can It Be Made? Details are limited. However, buckets and barrels have been used.

7. What Is The Market? The problem of high fluoride levels in drinking water is encountered in substantial areas where groundwater is used in flat dry scrubland. All continents seem to be affected with significant problems being reported in Asia (central India), Africa (western Kenya and Tanzania), Latin America (Argentina, Brazil, Mexico and El Salvador), and North American (Arizona and New Mexico). There is thus a substantial market for a simple defluoridation technique applicable to rural areas.

8. Case History Highlights: NEERI undertook a successful pilot deflouridation project using the Nalgonda technique in 119 fluorisis-ridden villages in Andhra Pradesh in 1977. It has reportedly planned to extend the project throughout the State.

9. Advantages and Disadvantages: The technology has been shown to work in rural areas of India. Costs are reported to be "low enough so as to be feasible" and the technique can be applied at both a household or a community level. Since the effect of fluoridosis is cumulative, occasional breakdowns are only of minor importance.

In many developing countries it would be extremely difficult to ensure the steady supply of lime, bleaching powder and alum necessary for the successful operation of the units. Operators also need to be well trained and conscientious.

Address for Further Information

Director
National Environmental Engineering Research Institute (NEERI)
Nagpur 440020
India



23

# Bone Meal Defluoridation Process

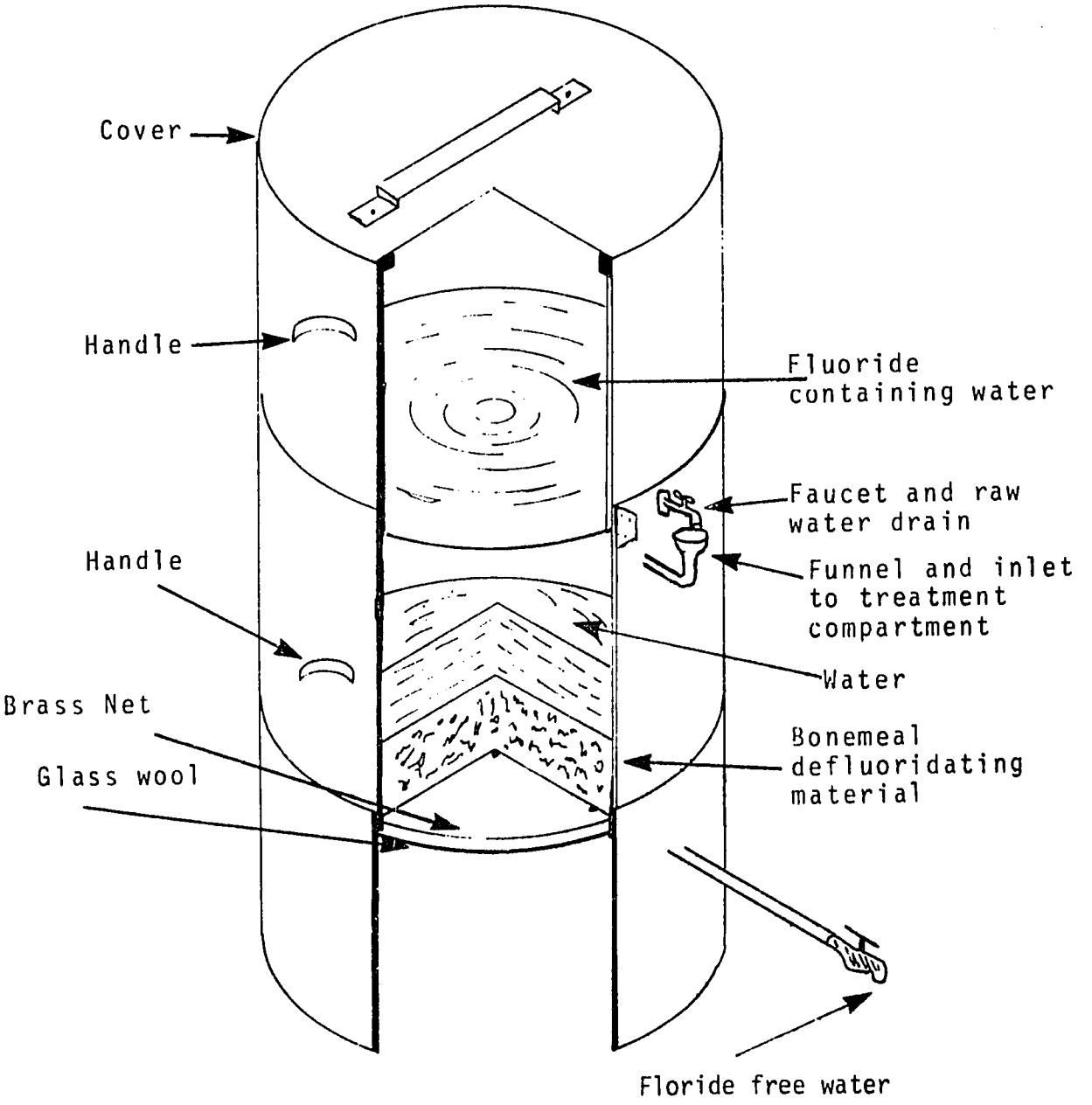

TECHNOLOGY INFORMATION BRIEF

1. Name of Technology: Bone Meal Defluoridation Process

2. Purpose: To remove excess concentrations of fluorides which are present in some groundwaters, making use of the affinity of bone for fluorine, thus preventing dental fluorosis and skeletal damage to those who use the water.

3. State of Development: This method has been used throughout Argentina, Mexico and in some regions in the United States with success. The most economically feasible models are of size such that they serve 4 to 5 families. Municipal scale models have not been made practical.

4. Physical Description: This method consists of passing the raw water through a bed of pretreated ground bone. The fluoride reacts with the tricalcium phosphate in the bone to form an insoluble solid which is retained on the conventional filter medium which underlies the bone. The bone is regenerated approximately every five days by treatment with sodium hydroxide followed by neutralization with carbon dioxide. Other exchange media have been developed but would have only local application.

5. How Does It Operate/Function? Installation can be somewhat involved depending on the size of the unit. However, if obtained in a commercial package plant form, installation would be less complicated. Operation and maintenance is simple, requiring only a single, well-trained operator. Regeneration of the exchange medium (the bone) is required every 3-7 days involving treatment with sodium hydroxide. The excess alkalinity is then neutralized with $CO_2$. Backwash rates in regeneration must be carefully monitored, so as not to disturb filter media. Often a single operator can manage the unit although he must be well-trained in its operation.

6. How Can It Be Made? The tanks are made of steel, and widely-available 55-gallon drums would be adequate for a group of four or five families (or about 40 people).

7. What Is The Market? The problem of high fluoride levels in drinking water is encountered in substantial areas where groundwater is used in flat dry scrubland. All continents seem to be affected with significant problems being reported in Asia (central India), Africa (western Kenya and Tanzania), Latin America (Argentina, Brazil, Mexico and El Salvador), and North American (Arizona and New Mexico). There is thus a substantial market for a simple defluoridation technique applicable to rural areas.

8. Case History Highlights: This method has been used in the United States for several decades successfully although not at a rural level, i.e., not employing simple technology adaptable to rural communities. Small villages in Mexico and Argentina have been utilizing this process since 1977 with good results at a reported annual operation and maintenance cost of about US $1 per capita (Argentina, 1977).

9. Advantages and Disadvantages: The bone meal defluoridation process is effective in providing good fluoride removal: The unit process is relatively simple; the bone medium is readily available in most areas; and the costs are low for a small unit. The system can become too complex and expensive on a larger municipal scale; availability of the caustic may be a problem; however, the carbon dioxide can easily be generated locally. The unit utilizes mechanical components such as valves and mechanical agitators which required maintenance and spare parts.

Address for Further Information

Andrade y Cia
Diogenes Taborda 850
1437 Buenos Aires, Brazil
South America

# Iron Removal Units

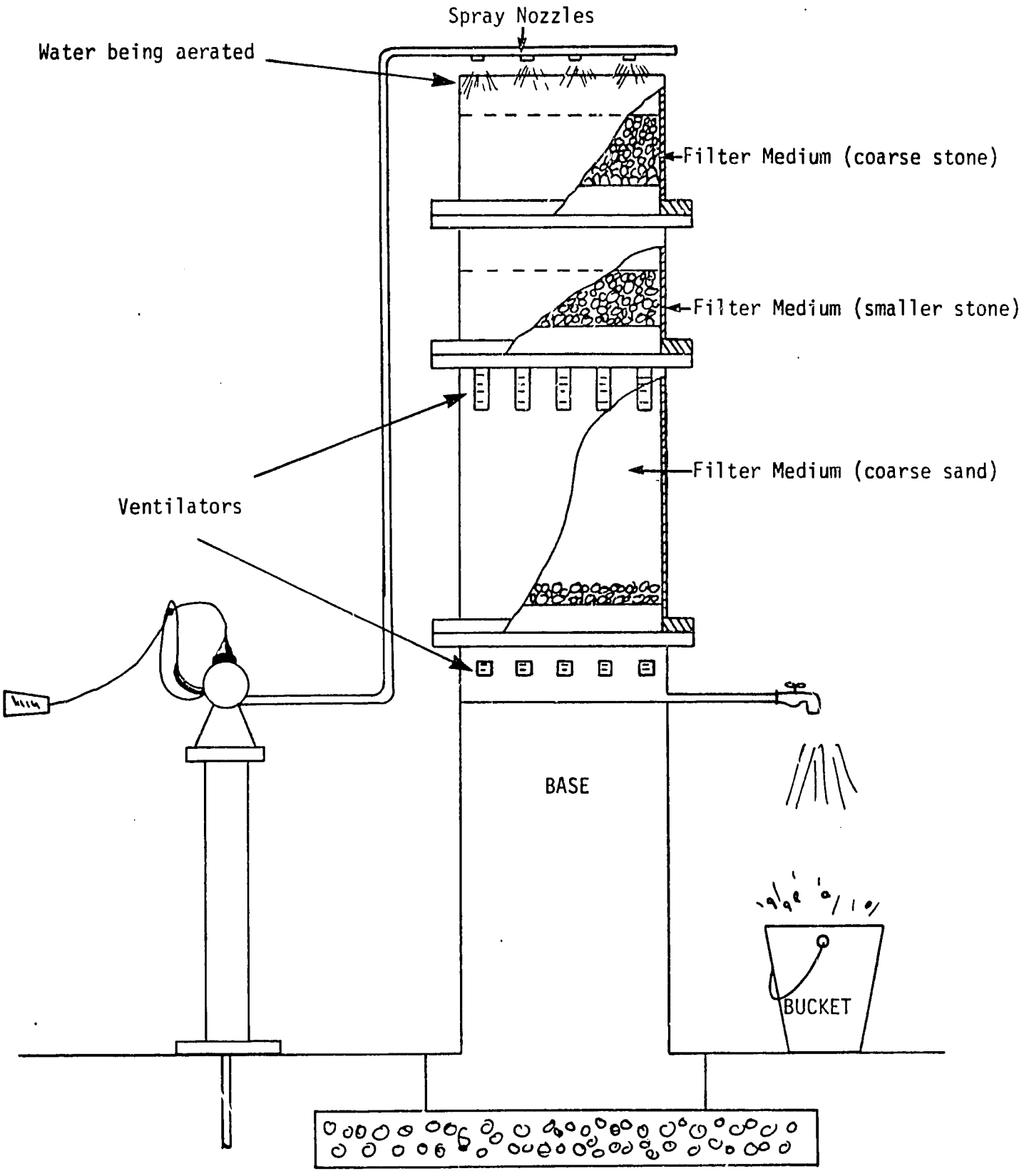

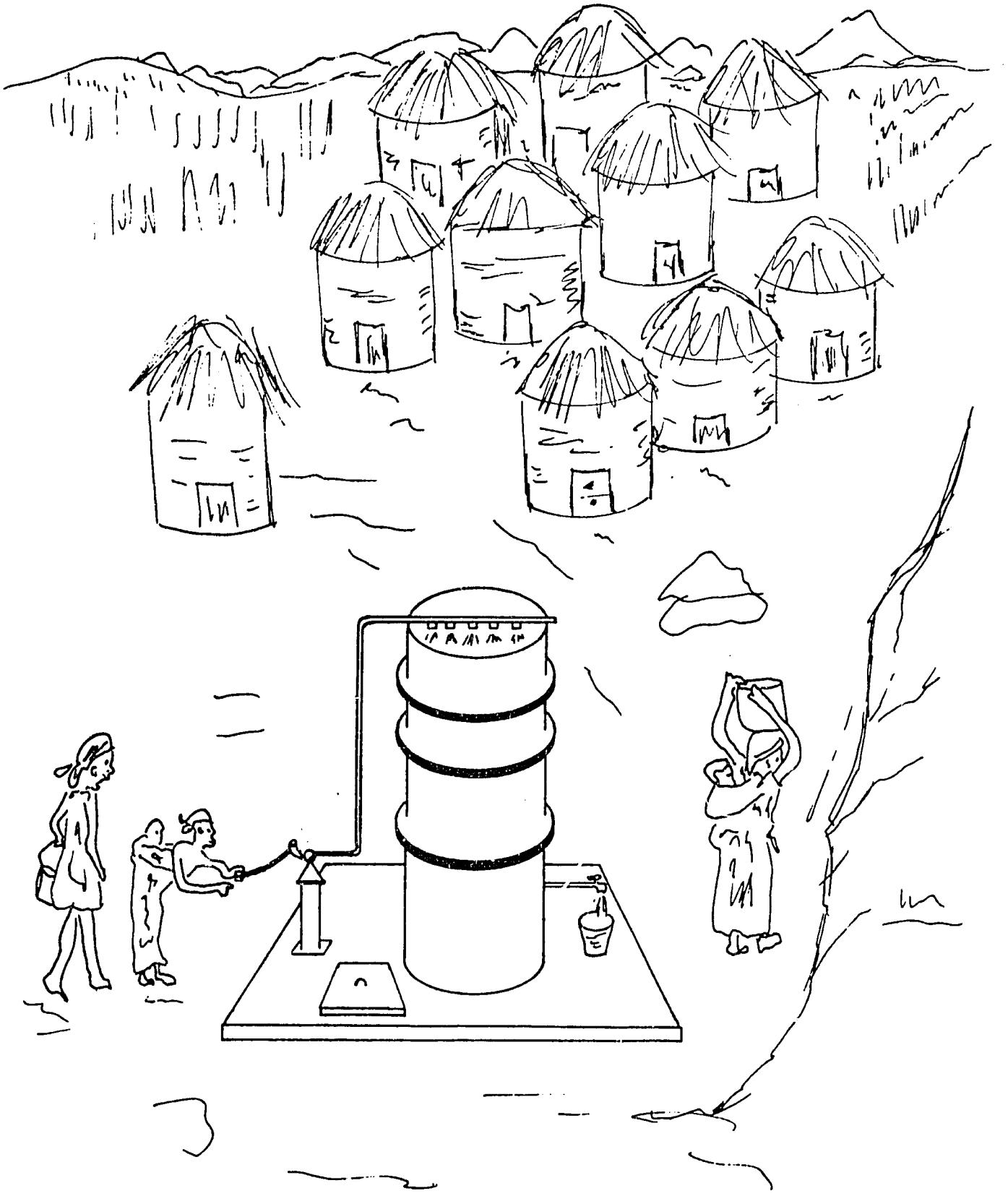

TECHNOLOGY INFORMATION BRIEF

1. Name of Technology: Iron-removal Units

2. Purpose: To render groundwater high in iron and/or manganese content acceptable, thus facilitating the use of protected groundwater rather than polluted surface water by villages.

3. State of Development: Commercial units have been developed and are in use throughout India and in Bangladesh. One commercial manufacturer of the working units is Richardson and Cruddas (India) who make 3 units costing about $100, $800, and $1300 serving 50,500 and 1500 people, respectively.

4. Physical Description: Water flows through aeration, settling, and sand filtration processes. The units generally consists of a series of aeration trays, often containing coke or charcoal as in the Richardson and Cruddas model, above the filtration media. In larger units, a treated water storage tank can be utilized with taps for drawing off the water. The larger units are equipped with necessary arrangement for backwashing.

5. How Does It Operate/Function? Installation is simple and done by the purchaser. Operation consists of pumping water either by hand or using power pump to the top of the aerator and through taps at the base. After a certain period of operation (typically about one month) either the filter must be backwashed or the sand must be removed, washed and replaced. The necessity for maintenance is indicated by deteriorating water quality and/or increasing head losses through the filter. An operator (usually the owner in the case of the smaller units) has to be instructed in the backwashing/replacement procedure.

6. How Can It Be Made? The units can be, and are, made in the type of sheet metal workshop found throughout the developing world.

7. What Is The Market? There is an opportunity to use this unit in rural areas having groundwater which is high in iron (more than 1 mg/l as Fe), and manganese (more than 0.5 mg/l as Mn). Purchasers could be groups of 4 or 5 families or communities of up to 1500 people per unit.

8. Case History Highlights: UNICEF water officer in New Delhi could provide information on the considerable programs undertaken in both India and Bangladesh. A list of users of the Richardson and Cruddas plants is available from the manufacturer (address below).

9. Advantages and Disadvantages: The technology meets the need for iron-removal from groundwater. The manufacture of the units should be possible in any developing country. The units are low in cost, about $1 per capita. Maintenance is simple, and uses local materials (such as sand and charcoal) and the units contain no mechanical devices.

The technology can contribute to meeting a problem which is felt only in some areas of some LDC's. Periodic maintenance, albeit simple, is essential for the functioning of the unit.

Address for Further Information

Richardson and Cruddas (1972) Ltd.
Shasti Marg
Mu' ıd (West)
Bombay 400080 India

# Delbuoy Seawater Desalting System

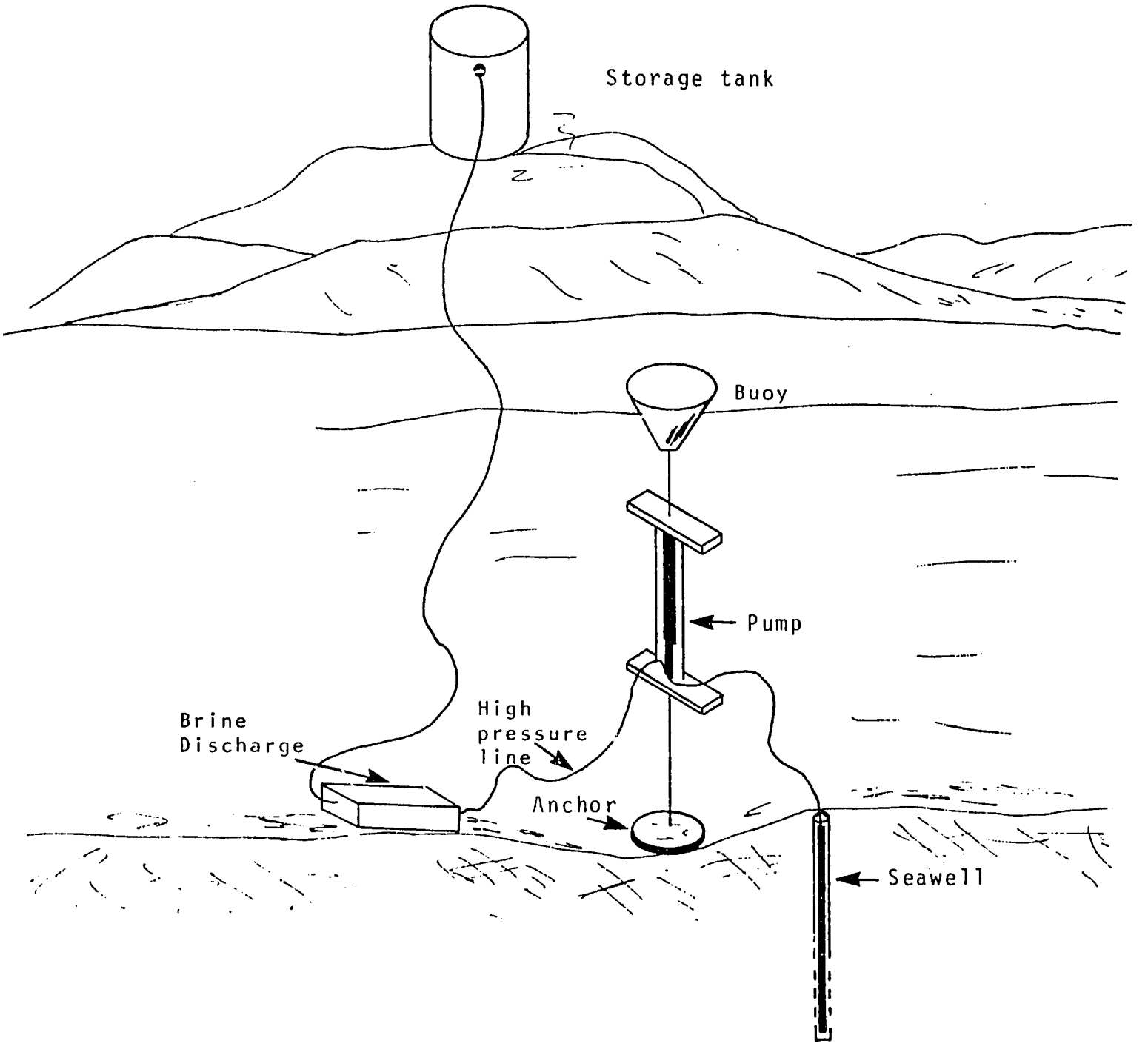

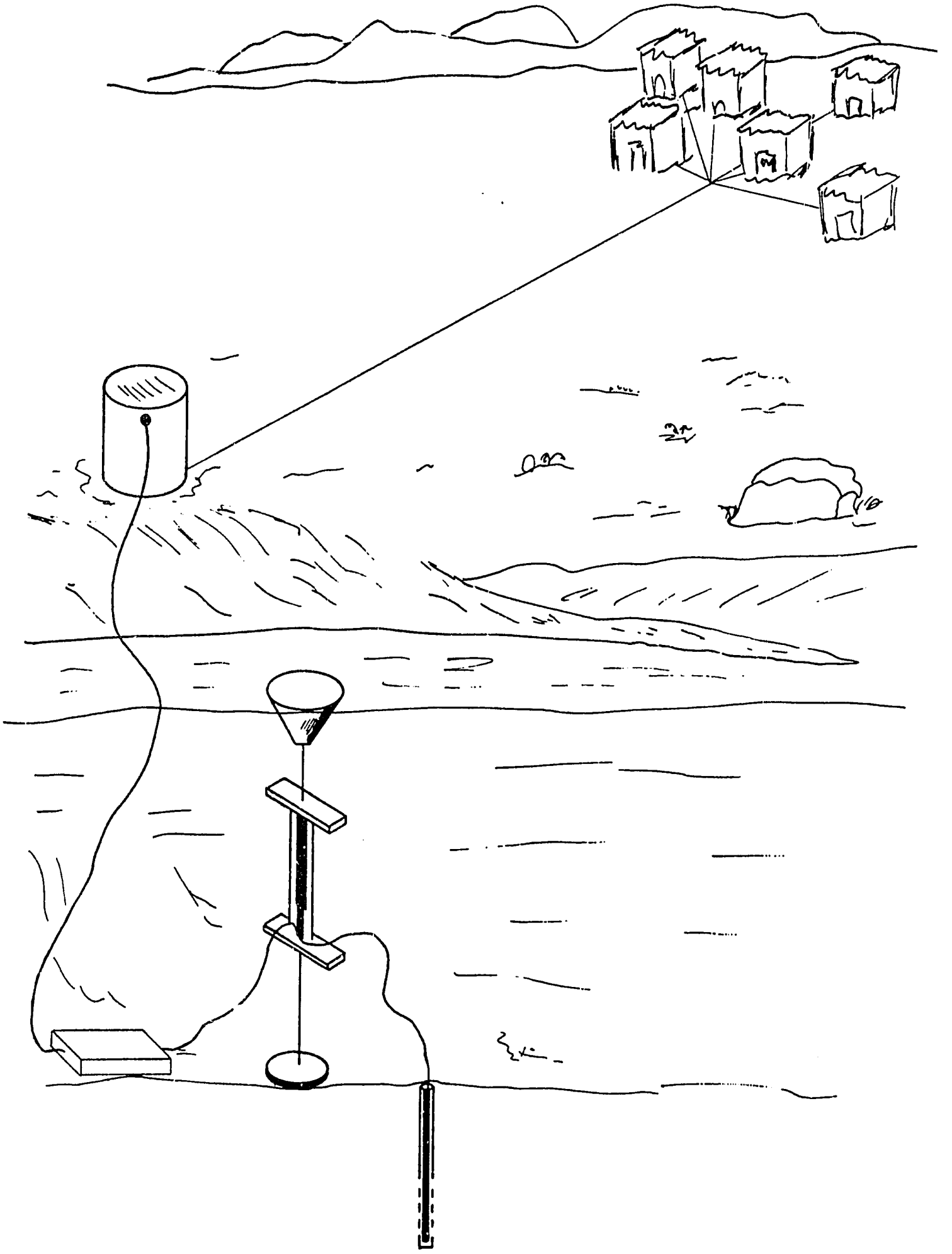

TECHNOLOGY INFORMATION BRIEF

1. Name of Technology: DELBUOY Seawater Desalting System.

2. Purpose: To produce potable water from oceanic and salt water for coastal and island populations using the renewable energy of seawater to pump water through a reverse osmosis module.

3. State of Development: A full scale 250 gallon per day prototype has been operated in Delaware and another prototype is being assembled for sea trial off Magueyes Island, Puerto Rico, January-Feburary 1982.

4. Physical Description: (see sketch). The present DELBUOY prototype consists of a six foot diameter foam buoy which supports and drives a high pressure 800 psi low-cost ($350) fiber glass and plastic gland pump. The bottom of the pump is moored to an anchor. Sea water is drawn from a sea well by the wave-actuated pump and forced through a commercial reverse osmosis unit which lies on the sea floor. De-salted water then flows by pipeline to the shore. Larger systems can be made (up to 6,000 gpd) and a number of them deployed in parallel to produce larger quantities of fresh water.

5. How Does It Operate/Function? As indicated in the sketch, wave action on the buoy provides the energy. The piston rod is attached to the anchor and the body cylinder is attached to the buoy by a line whose links will deliberately break under extreme weather conditions. Three foot wave action is sufficient to pump water at 800 psi to yield 250 gallons of fresh water per day. Natural rubber cords provide the refill energy in the pumping cycle. Sea water is pumped from a sea well through a commercial reverse osmosis module, with brine discharged to the sea and desalted water piped to shore.

6. How Can It Be Made? Aside from the commercially available reverse osmosis module, all other parts of the DELBUOY system could be fabricated and assembled in most coastal developing countries. Some of the technologically advanced developing countries have the capability to manufacture reverse osmosis devices. The buoy, pipe and pump parts are made of plastic foam, PVC, fiber glass, urethane, natural rubber and 90/10 cupro nickel, all of which are commercially available and corrosion resistant. The forming and assembly of the pump an buoy use simple techniques and existing machinery. Reverse osmosis manufacture may best be initiated under license. Estimated U.S. manufacturing costs for the pump are $350. The buoy could cost $250. A commercially available 250 gallon per day reverse osmosis module costs $1,200 and should last five years. Total system costs are about $1,900 depending on distances and depth of lines and piping plus labor and use of boat and a water jet pump for drilling the sea well and installing the system. Current estimates indicate that the 250 gallon DELBUOY prototype can produce water at a price of $5.50 per 1,000 gallons.

7. What Is The Market? The market is existing coastal and island communities that do not have access to potable water, or such communities that could be developed if potable water was made available cheaply. Many islands and sea coasts adjoin rich fishing grounds that cannot be harvested because there is no water supply for coastal communities.

8. Case History Highlights: The only sea trial case is in process of Magueyes Island, Puerto Rico. Test results and costs should be available by summer of 1982 from the University of Delaware.

9. Advantages/Disadvantages: The DELBUOY Seawater Desalting System is relatively simple to make, assemble and operate. Maintenance is minimal. There are no energy or operating costs. It brings fresh water to outlying areas at costs between 0.1 and 0.5 of existing desalination processes. Costs could come below $1 per 1,000 gallons within the decade, which might be feasible for irrigation water in some areas (e.g. Somalia). Installation is straight forward and requires little training. Systems could be moved as people move. In event of severe storms, the buoy breaks free, the pump settles to the sea floor for later recovery and start-up with the recaptured buoy or its inexpensive replacement. Systems should last several years before requiring replacement. Special training in the use of scuba gear and water jet drilling equipment (a small motor driven water pump and hose) from a small boat is required. The water jet is used to insert the mooring anchor and to drill the sea well. If the cost and operational results bear out projections, the DELBUOY system will provide lower cost potable water than other approaches, which require large investment and lack the feasibility and modularity of the DELBUOY. The DELBUOY system shares all the disadvantages of any untried technology. None of these are considered to be unmanageable, however.

# Home Water Treatment
# Disinfection and Storage/Dispensing Unit

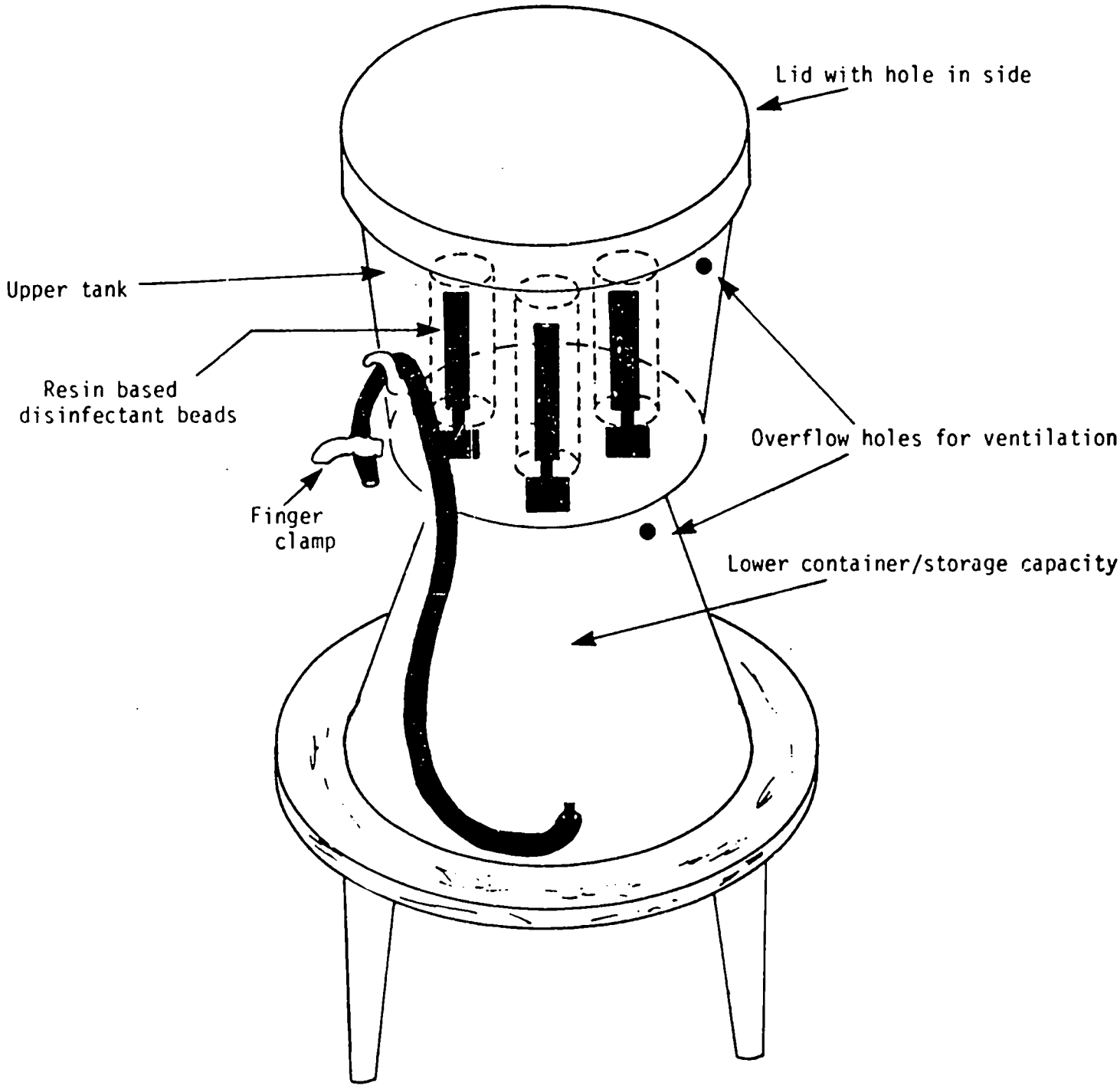

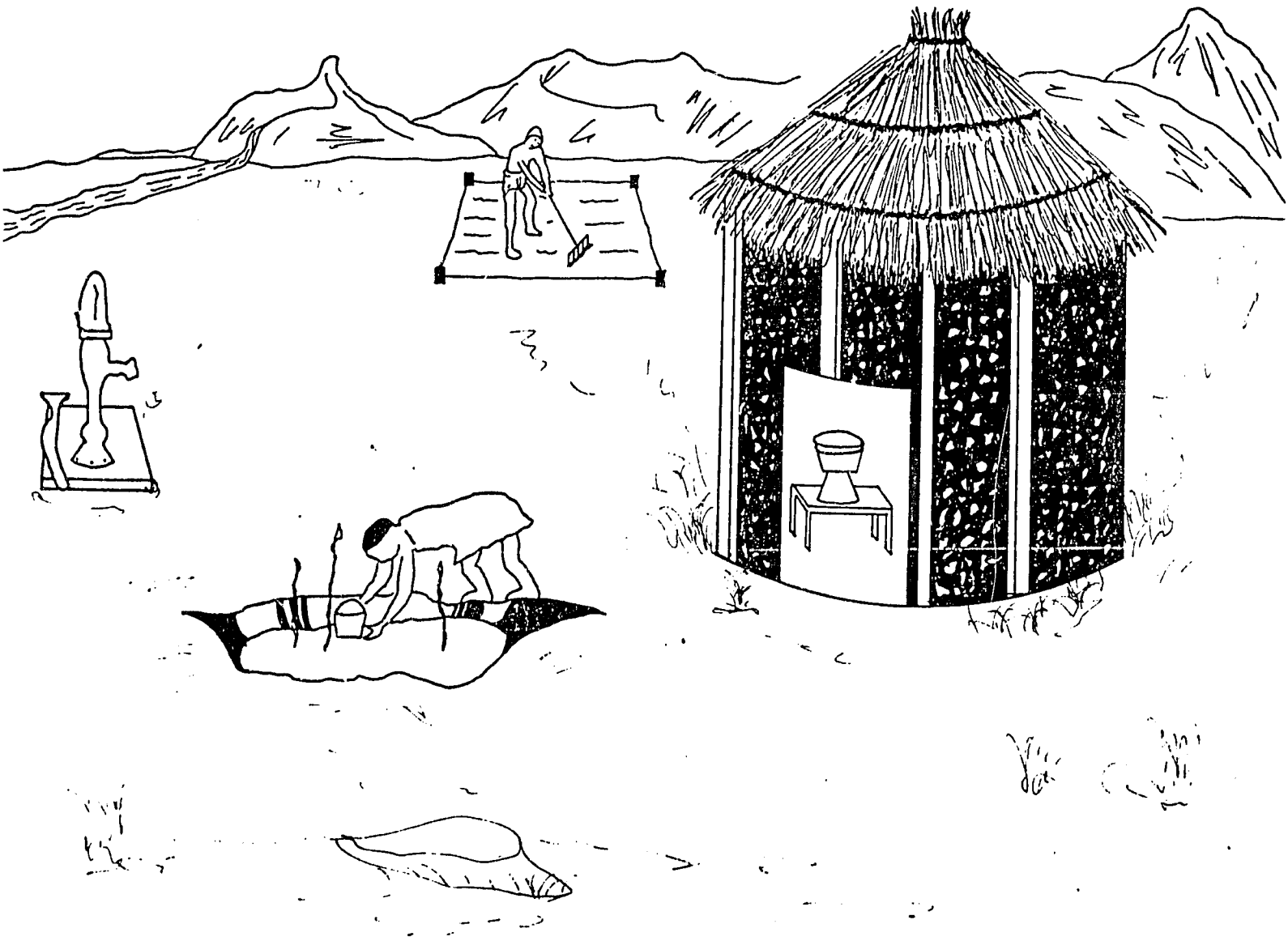

TECHNOLOGY INFORMATION BRIEF

1. Name of Technology: Home Water Treatment, Disinfection and Storage/ Dispensing Unit.

2. Purpose: To provide a resource to the average six (6) person poor LDC family that would (1) insure simple, safe, low cost, low O&M water treatment, disinfection and storage; (2) provide convenient safe storage as close to the users lips as possible; and (3) be manageable by the LDC family without the need of outside assistance for a period of at least 5 years. Put the water (any drinkable quality) in at the top of unit and get it safe out of the bottom dispenser at a rate of 10 litres/person/day.

3. Stage of Development: Prototypes exist using combinations of ceramic candle micro-filtration and resin based surface charge disinfection beads in various configurations. The development of new non-proprietary design using known, available materials and lab/field testing in 3 countries with 500 units carefully monitored in each country using LDC organization, university or professional monitors has been proposed.

4. Physical Description: The unit consists of a thermo-molded plastic container, a ceramic microfiltration candle (0.2 micron porosity), and surface active-high surface charge disinfection resin beads housed in a plastic dispensing hose. The unit sits on table, stool, block or chair in a home.

5. How Does It Operate/Function: Water of potential drinkable quality is poured in the top of the unit. Safe water is released from the bottom of the dispenser. Training requirements for use involve iterative health eduction showing users (1) how to put water in, (2) clean upper unit and brush off filter, (3) maintain dispensing hose, (4) obtain assistance if needed, (5) obtain spare parts.

6. How Can It Be Made: All parts and materials for the unit except the ceramic candle can be made and fabricated in LDC's having basic plastics molding and basic chemical (organics) industries. Local manufacture could be accomplished by the private sector in an LDC with technical assistance and/or franchising assistance from higher technology countries. The investment costs for manufacturing is still unknown although it is estimated to be under $40,000. The estimated cost for unit is $30 at 50,000 units/year scale and $70 at 10,000 units/year scale. This includes material costs, fabrication and profit.

7. What Is The Market: The anticipated user is the rural or urban fringe family without a safe convenient source of water supply. In areas with a high incidence of water borne disease such as cholera, typhoid and guinea work, parasites and water related disenteries, as high as 60-70% reduction in water borne diseases could result.

8. Case History Highlights: There has been no field experience with the unit described here. Various home filter systems have failed in the past for a variety of reasons including 1) lack of heath education, 2) lack of local manufacturing of spare parts, 3) excessive costs, 4) inappropriate design, (5) lack of logistics support for maintenance, repair, etc., 6) inappropriate materials in filter/storage units.

9. Advantages/Disadvantages: Advantages include (1) simplicity, (2) low unit cost, (3) low O&M requirements, (4) low training requirements on use & operation/maintenance, (5) locally manufacturable, (6) closest, most convenient way of providing safe drinking water to LDC families; clean water is not contaminated, in transport or storage, (7) a variety of water sources can be used (well, pond, stream, etc.) irrespective of their quality, (8) family members take responsibility for their own water supply, (9) training can easily be carried out by LDC training and promotional workers, (10) fills a void now present. Acceptability should be high if prior sociocultural survey conducted to insure shape, color and style/use fits into accepted water handling/storage practices of the local populace.

   Disadvantages include (1) requires local manufacture, (2) requires health education to accompany unit, (3) requires setting-up spare part replacement marketing system, (4) requires importing high quality ceramic candle for micro-filtration unit (so not now 100% locally manufacturable), (5) requires technical assistance (inter-disciplinary) to make manufacturing, marketing, education and O&M system work.

# Auger Drilling

Hand Auger Drilling

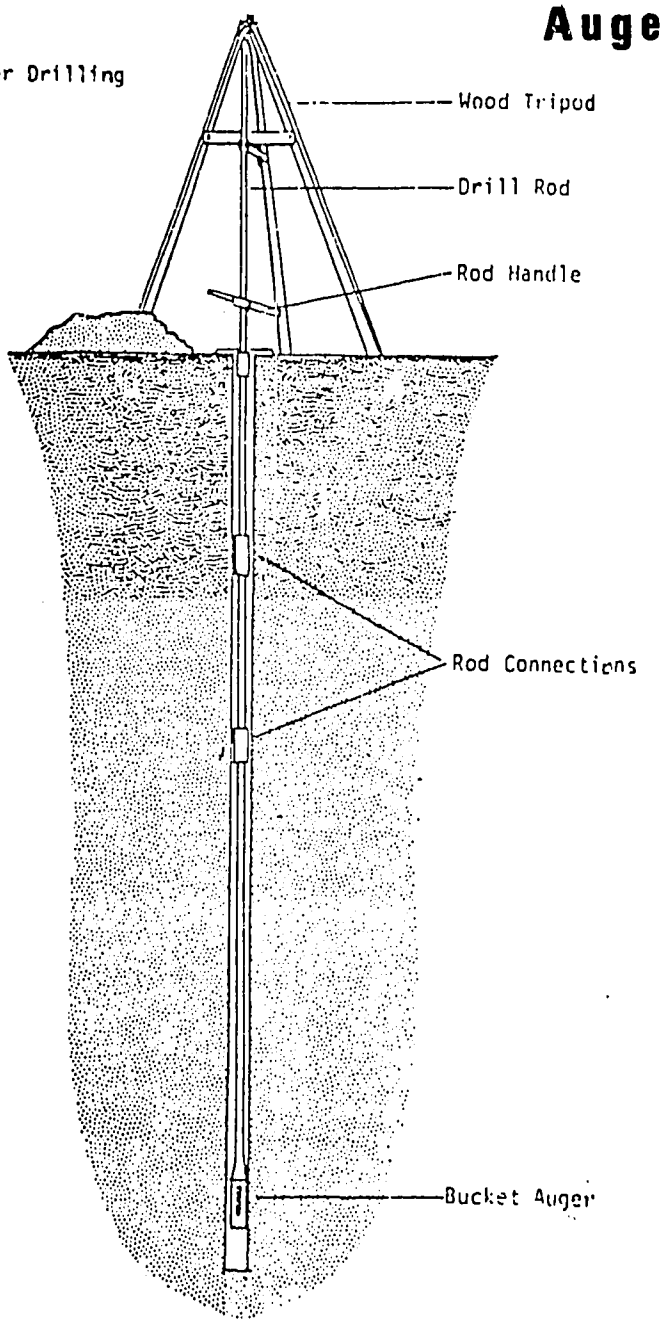

Typical Drill Rod Connection

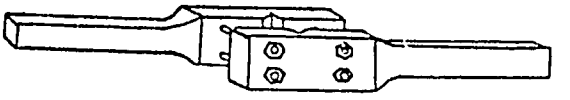

Hard-Wood Rod Handle

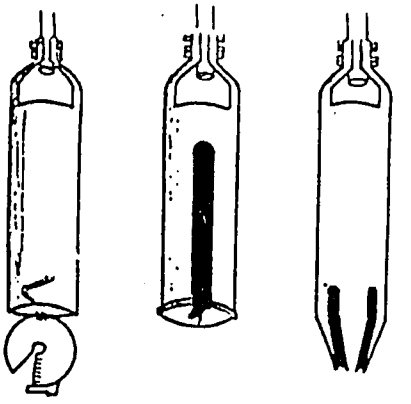

(a) Sand Augers for Non-Cohesive Soils

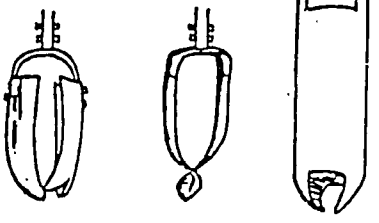

(b) Cohesive Soil Augers

Bucket Auger

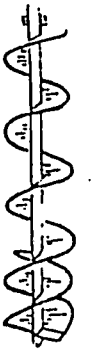

Helical Auger

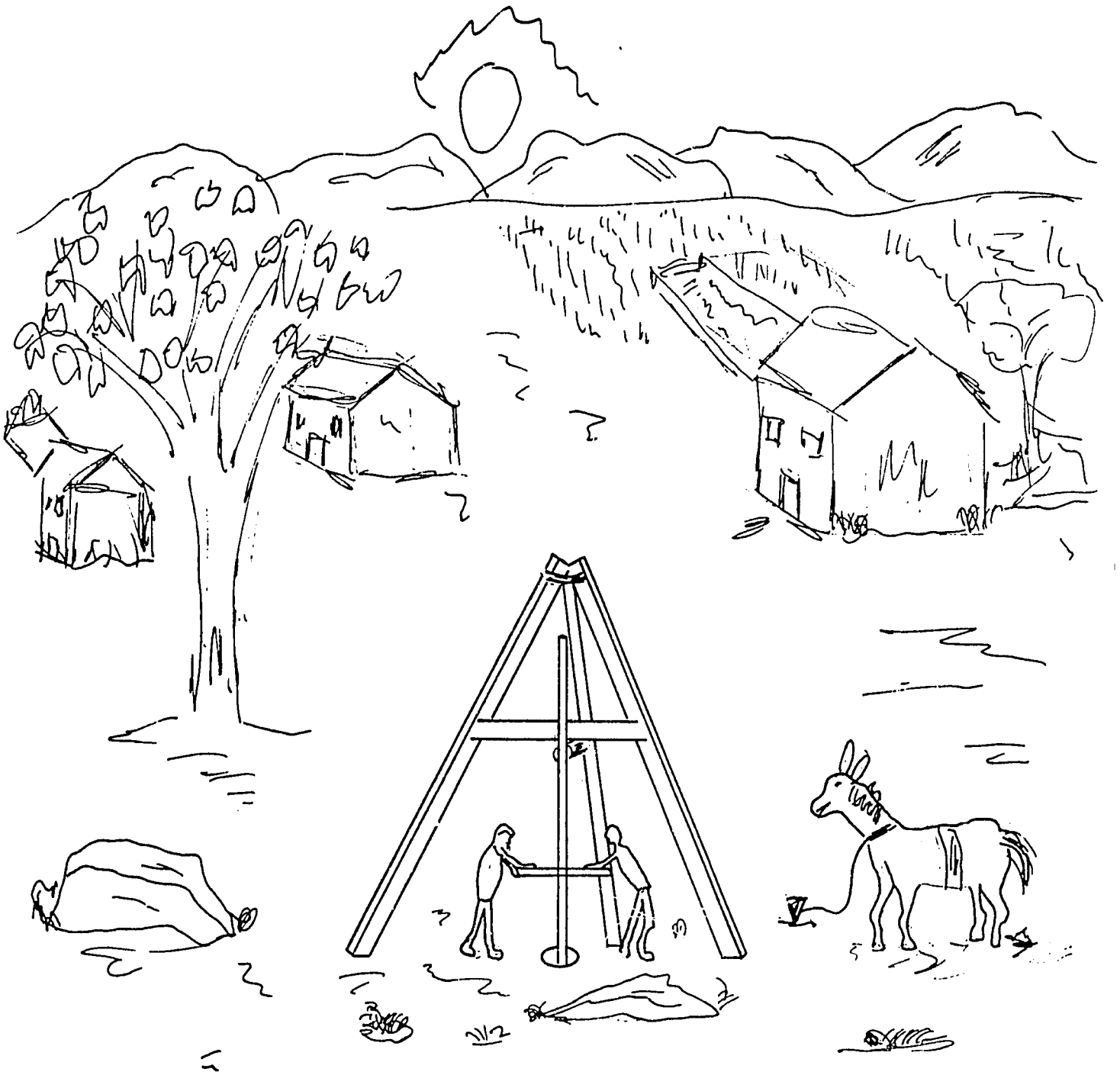

TECHNOLOGY INFORMATION BRIEF

1. Name of Technology: Auger Drilling.

2. Purpose: To provide simple, low-cost, well construction. Resulting wells yield adequate water for village/domestic use. The augering technique is used to construct small diameter shallow wells in consolidated materials.

3. Stage of Development: Augering is one of the oldest and most basic methods of well construction from which more sophisticated meachanized methods have arisen. The degree of sophistication chosen is dependent on the availability of technological skills, equipment and capital. The focus of this brief is oon manual labor, locally fabricated tools and simple procedure.

4. Physical Descrip ion: (see sketch). The equipment consists of the auger (a cylindrical cutting tool), drill rod (small diameter pipe), a wooden rod handle attached to the drill rod, and a tripod or derrick with a rope and pulley system. Bucket augers, tapered tube augers, open blade augers, or percussion bits and sand bailers are several types of cutting tools which may be needed depending on soil conditions. Casing may also be necessary during construction.

5. How Does It Operate/Function? The drill rod is attached to the auger and suspended from the tripod with the rope and pulley system. One or more workers rotate the drill rod using the attached handle. As the auger rotates in the hole, sediment is loosened and forced into the body of the auger. When the auger is full it is withdrawn from the hole using the rope and pulley, and emptied. The auger and drill rod are again lowered in the hole and the procedure continues. Four to five crew members are needed to auger a well. Only one need be trained in basic well drilling technique.

6. How Can It Be Made? All tools and equipment are easily made from locally available materials. Blacksmithing skills, oxy-acetylene cutting torches, and electric arc-welding machines are helpful. An auger can be made from scrap casing, pipe, sheet metal, or automobile parts, or purchased commercially. Drill rods are constructed from locally available pipe. A tripod can be constructed from local lumber or pipe. Rigs complete with auger, tripod, drill rods, rope and pulley, casing, auger handle, sand bailer, and small hand tools could be set up with locally available materials and labor for about $100-$200 (1978 dollars).

7. What Is The Market? A well constructed with the augering technique is best suited for limited village and domestic use. The resulting small diameter well requires a pump which users must be trained to operate and maintain. Maintenance of augering equipment is minimal. The auger blades must be kept sharp.

8. Case History Highlights: A fully equipped augering rig used in Togo cost $1,700. On-site repairs and shop maintenance averaged 42 cents per meter of well.

9. Advantages and Disadvantages: Equipment is simple to make, operate, and move, and the method is easily taught. The well depth is generally limited to 15-20 meters as augering becomes slow at depths where extensions to the drill rod must be uncoupled and recoupled. Augering is limited to unconsolidated non-caving ground conditions above the water table.

Reference for diagrams: National Water Wells Association, Appropriate Well Technologies: A Manual for Developing Countries. Washington, D.C.: Agency for International Development, October, 1978, p. 51,53.

Manual Jetting Equipment

# Jet Drilling

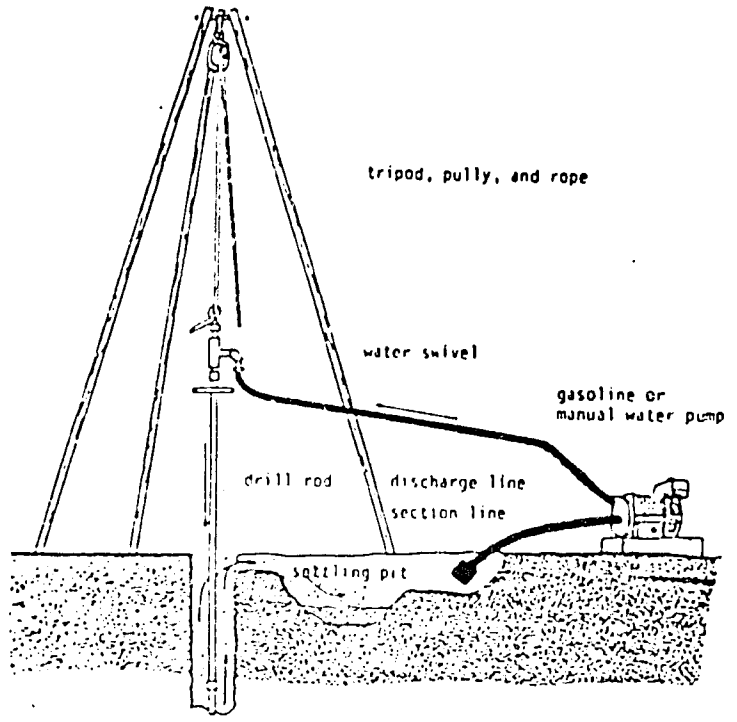


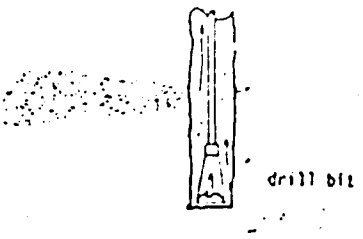


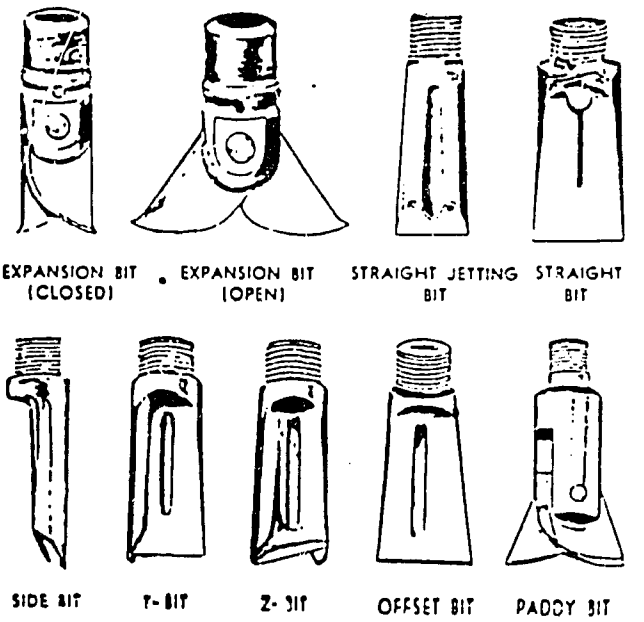


Bits for Jetting

Locally Fabricated Jetting Bit

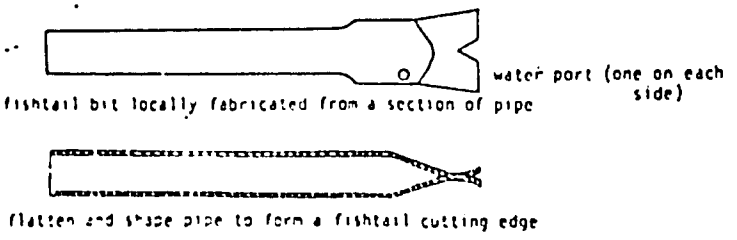

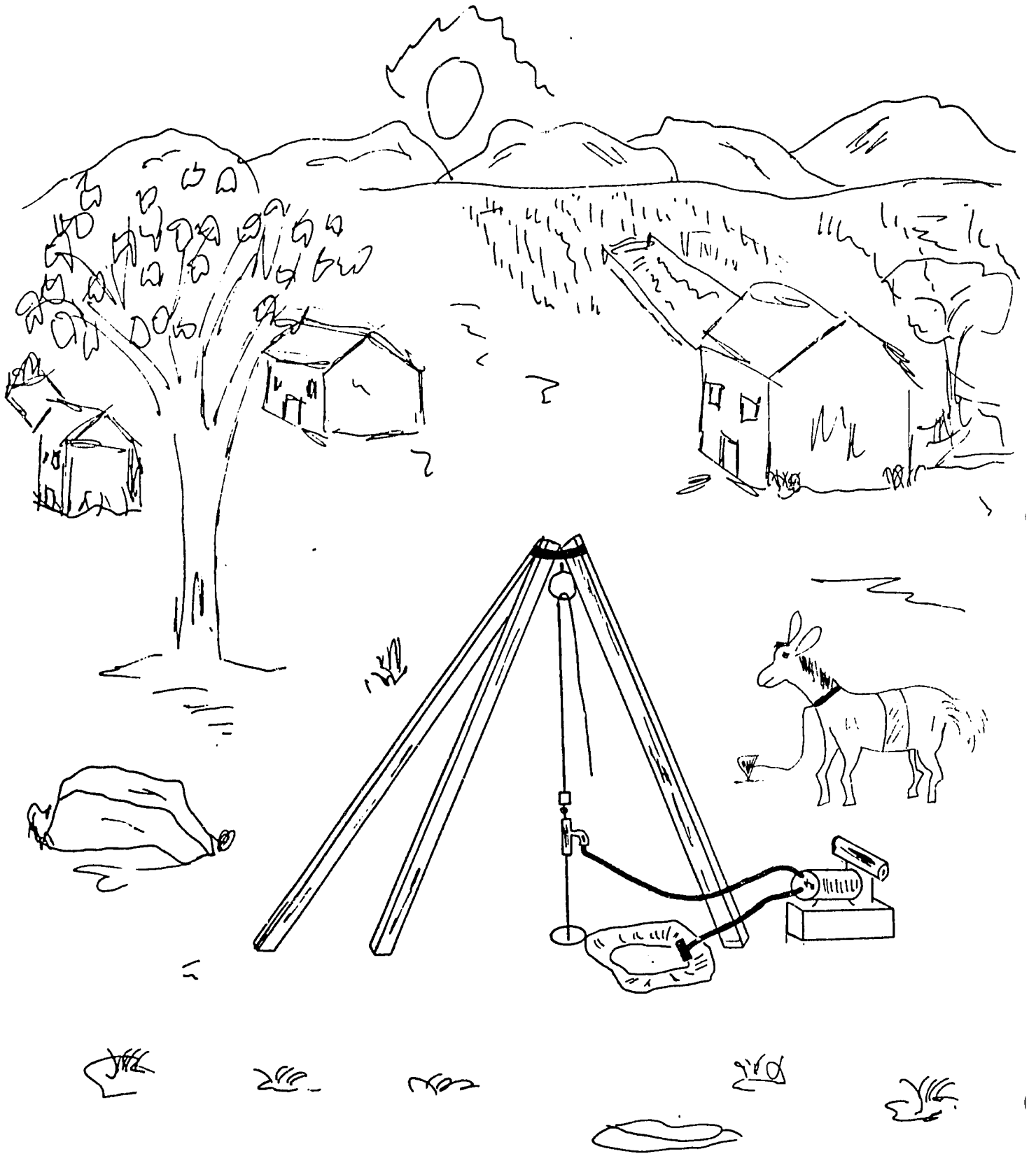

TECHNOLOGY INFORMATION BRIEF

1. Name of Technology: Jet Drilling.

2. Purpose: To provide simple, low-cost, well construction. Resulting wells yield adequate water for village/domestic use. The jetting method is simple and fast and can be used in a wide variety of soil and rock conditions to construct wells of medium depth and small diameter.

3. Stage of Development: Many mechanized drilling techniques utilize jetting action with percussion or rotary bits. The availability of capital, skills, and equipment will determine the type of rig chosen. Simple, manual methods discussed here have produced excellent results.

4. Physical Description: The main components of a jetting rig are a water pump capable of maintaining pressures up to 11 kilograms per square centimeter (150 psi), hollow drill stem, and jetting bits, plus a tripod or derrick with pulleys to handle casing and drill stem. Several bit types are used depending on existing conditions. All bits feature port holes allowing high pressure water to jet out aiding the bit in excavation.

5. How Does It Operate/Function? Water is pumped at high pressure down the drill stem and through the bit ports. Percussive or rotary motion may also be applied to the bit by alternately raising and dropping the bit and drill string or rotating the drill string, either of which increase the efficiency of drilling. Continued pumping forces the water back up and out of the hole carrying the drill cuttings to a settling pond on the surface. After the cuttings have settled out the water is recirculated down the hole The water is commonly mixed with clay to form a drilling fluid of sufficient density to easily carry the cuttings and prevent collapse and caving of the hole. The drilling fluid is circulated either down the drill stem and up between the drill stem and casing, or down the casing and up between the casing and hole wall. Two minimally skilled workers can operate a hand jetting rig under proper supervision.

6. How Can It Be Made? Jetting bits may be purchased or locally constructed by flattening the end of a pipe and drilling water port holes on each face. The water pump is the only part of the rig which must be purchased or fabricated in a machine shop. Drill rod with standard pipe couplings, hoses and swivels, pipe wrenches, and tripod-pulley systems are also needed. In 1978, a simple jetting rig could be constructed for around $100 (excluding the water pump), and a complete manual rig including water pump, 15 meters of drill rod, bit, and water swivel could be purchased for $550. Motorized rotary jetting rigs can cost from $500 to over $2,000 depending on the pump, hoisting and rotary equipment.

7. What Is The Market? The jetting rig is well suited for construction of 5-8 centimeter diameter wells about 15-45 meters deep, with yields appropriate for domestic use. Well dimension and depth is easily increased with slightly more sophisticated jetting rigs, giving correspondingly greater water yields. Two unskilled workers can be taught to operate the jetting

rig. One experienced person is needed to oversee site selection and trouble shoot.

8. Case History Highlights: In ideal cohesive sandy soils, drilling rates as high as 12 meters per hour have been attained.

9. Advantages and Disadvantages: The jetting method is quick, simple, needs few people for operation, and can be used in loose caving formations. Jetting is not appropriate for extremely hard rock formations, is slowed down by bolders or hard rock, and requires water.

References for Diagrams: National Water Wells Association, Appropriate Well Technologies: A Manual for Developing Countries. Washington, D.C.: Agency for International Development, October 1978, pp. 60, 62. VITA, Construction and Maintenance of Water Wells, Washington, D.C.: VITA, 1969, p.68.

# Cable Tool Drilling

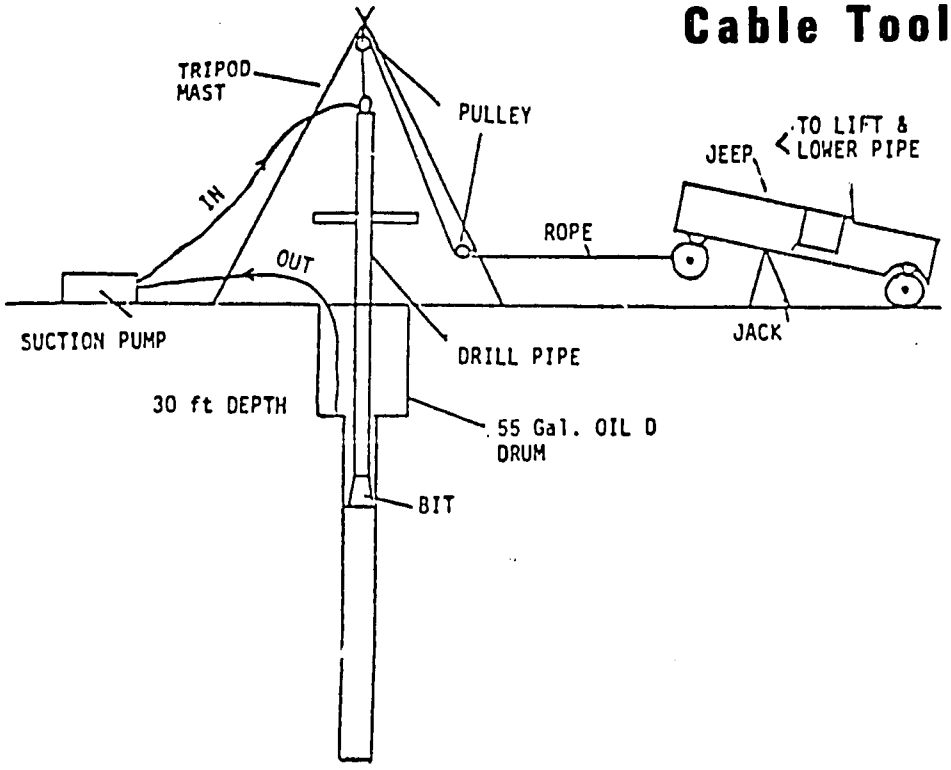


Motorized Cathead

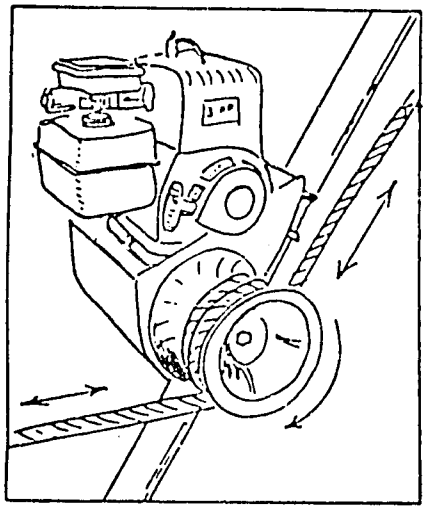

Locally Fabricated Cathead Mounted to a Rear Wheel Hub

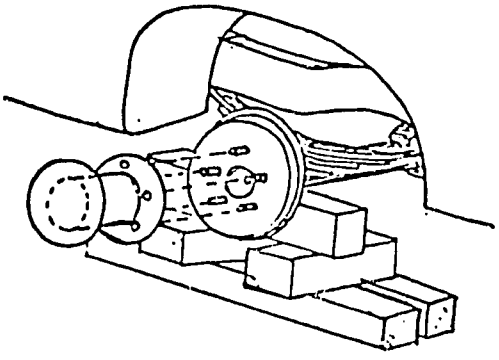

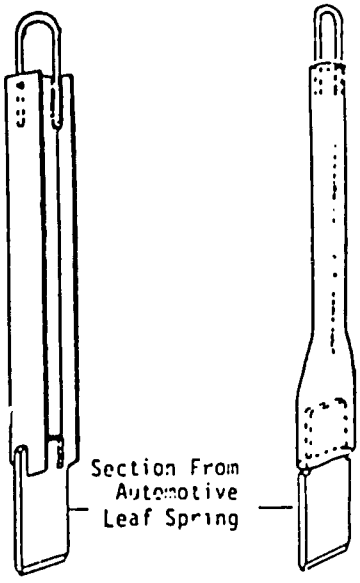


Simple drill bits constructed from structural steel, pipe, and scrap metal.

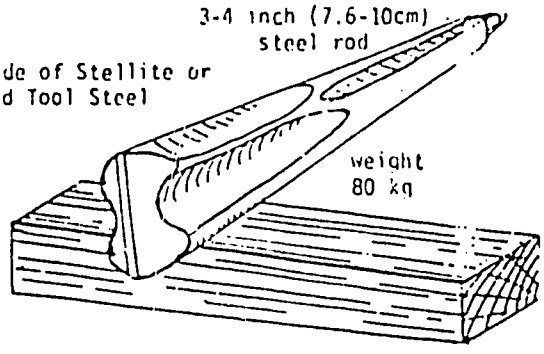


Locally Fabricated Bit for Drilling Hard Rock

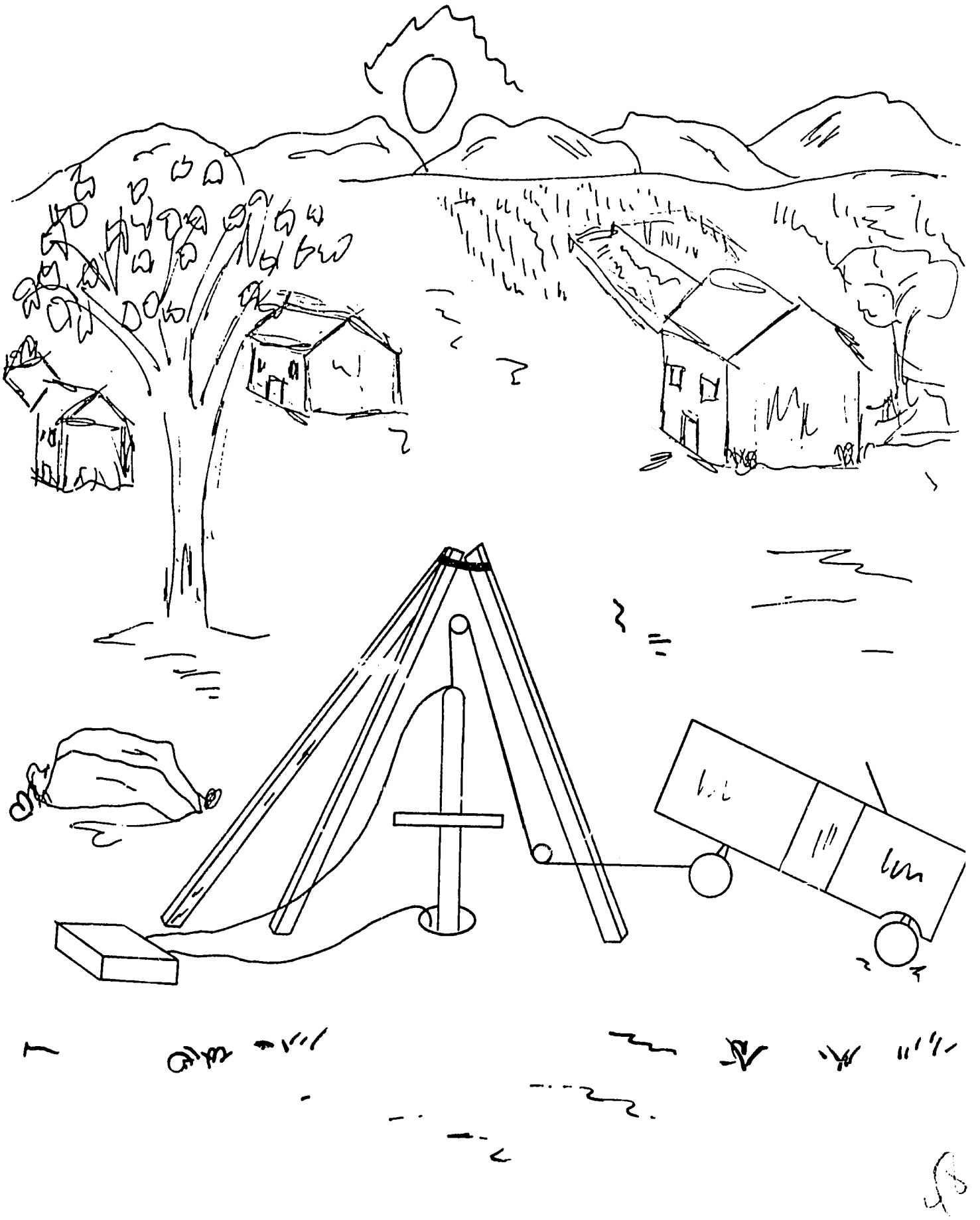

TECHNOLOGY INFORMATION BRIEF

1. Nature of Technology: Cable Tool Drilling.

2. Purpose: To provide simple, low-cost well construction. The cable tool method can be used in nearly any type of rock or sediment to drill deep holes.

3. Stage of Development: Cable tool drilling is one of the oldest and most widely used methods. The motorized cathead method discussed here is a scaled down version of sophisticated truck mounted motorized equipment.

4. Physical Description: (see diagram). The simplest cable tool drilling rig consists of a heavy drill bit on a steel cable threaded through a pulley system on a derrick or heavy tripod, a cathead, and wet bailers. The cathead is a rotating drum around which the cable is wound. A motorized cathead is run by a three or four horsepower gasoline engine. Power is transferred to the cathead by means of a fluid or centrifugal clutch and main drive pulley. This type of cathead mounts directly on the tripod or on a vehicle. Other simple catheads may be mounted on the power-take-off of a vehicle or on the rear wheel hub. A wet bailer consists of a hollow bucket with a one-way check valve or ball and tongue valve. The valve opens to trap cuttings and water when the bailer is lowered in the hole, then closes as the bailer is lifted out of the hole.

5. How Does It Operate/Function? The heavy bit is alternately raised and dropped in the hole (vertical reciprocating motion) breaking up the formation. Water maintained in the hole is removed with the drill cuttings by the wet bailer which is lowered in the hole when drilling is impeded by accumulated cuttings. Vertical reciprocating motion is produced on the drill bit by the cathead following one of the three schemes illustrated above. The drill rope or cable is wrapped around the cathead and the free end alternately pulled and released, so that the bit is raised and dropped as the cathead rotates. The motorized cathead cable tool drilling technique requires three or four workers, at least one of which must be trained to maintain and operate a gasoline or diesel engine or a vehicle. A sharp cutting edge must be kept on the drill bit, making a blacksmith with a forge necessary on site, or an electric arc welder, hard facing welding rod and a hand grinder to resurface and sharpen worn bits.

6. How Can It Be Made? All equipment except the power device for the cathead can be constructed with local skills and materials. Bits may be fabricated from steel bars, pipes, structural steel, automobile parts, etc., by a local blacksmith. Weight of the bit is increased by filling the bit with cement, attaching iron bars to the bit length or otherwise adding heavy material. The derrick or tripod can be constructed from local timber or steel rods. Wet bailers can be made from pipes, well casing, or scrap metal. The flap valve bailer features a disk of heavy rubber for a valve. A metal tongue and ball function as the valve in a dart valve bailer. The valve opens and closes one end of the hollow bailer while the other end is attached to the cable or rope. Catheads



49

car be made from well casing welded into a metal spool. Sand casting and simple foundry techniques can produce more sophisticated catheads. Wet bailers, tripod, cable, and design and fabrication of drill bits may cost $450 (1978). A motorized cathead may cost $800 in the USA (1978), but will cost much less if made locally.

7. What Is The Market? Cable tool drilling is very versatile and can be used in nearly any rock type to drill wells suitable for village water supply, irrigation, municipal use, etc. Wells are usually 10-15 centimeters in diameter with varying depths. Some training is required to operate the rig, and maintenance is considerable as the bit must be sharpened often especially when used in hard rock. Blacksmith skills or equivalent are required on site.

8. Case History Highlights: The motorized cathead cable tool drilling method has been successfully used in areas where a large number of wells must be drilled in limited time or where manual labor is less cost effective.

9. Advantages and Disadvantages: Cable tool drilling is easily adapted to various drilling conditions, requires less water than for comparable motorized techniques, and can be used to construct high-yield wells. Drilling is slower than with comparable motorized techniques, especially in hard formations, and the hole must be cased as drilling proceeds if drilling in unconsolidated formations. The operation and maintenance of motorized equipment necessary for this technique may limit local participation and acceptance or even the application of this drilling technique in developing countries.

# Roboscreen

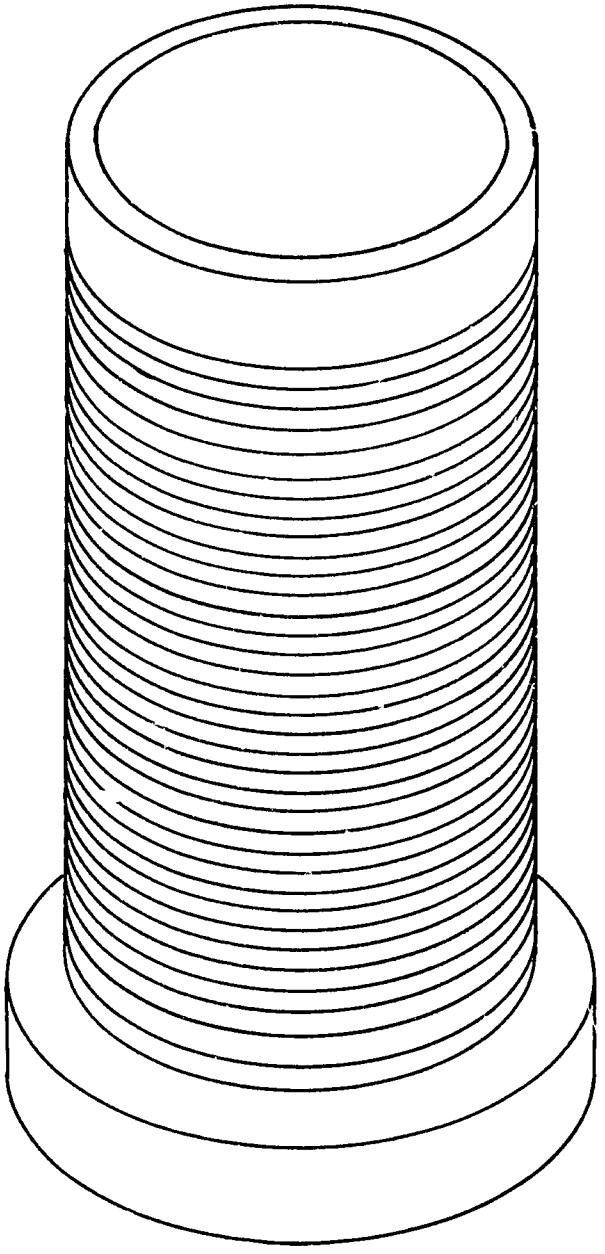

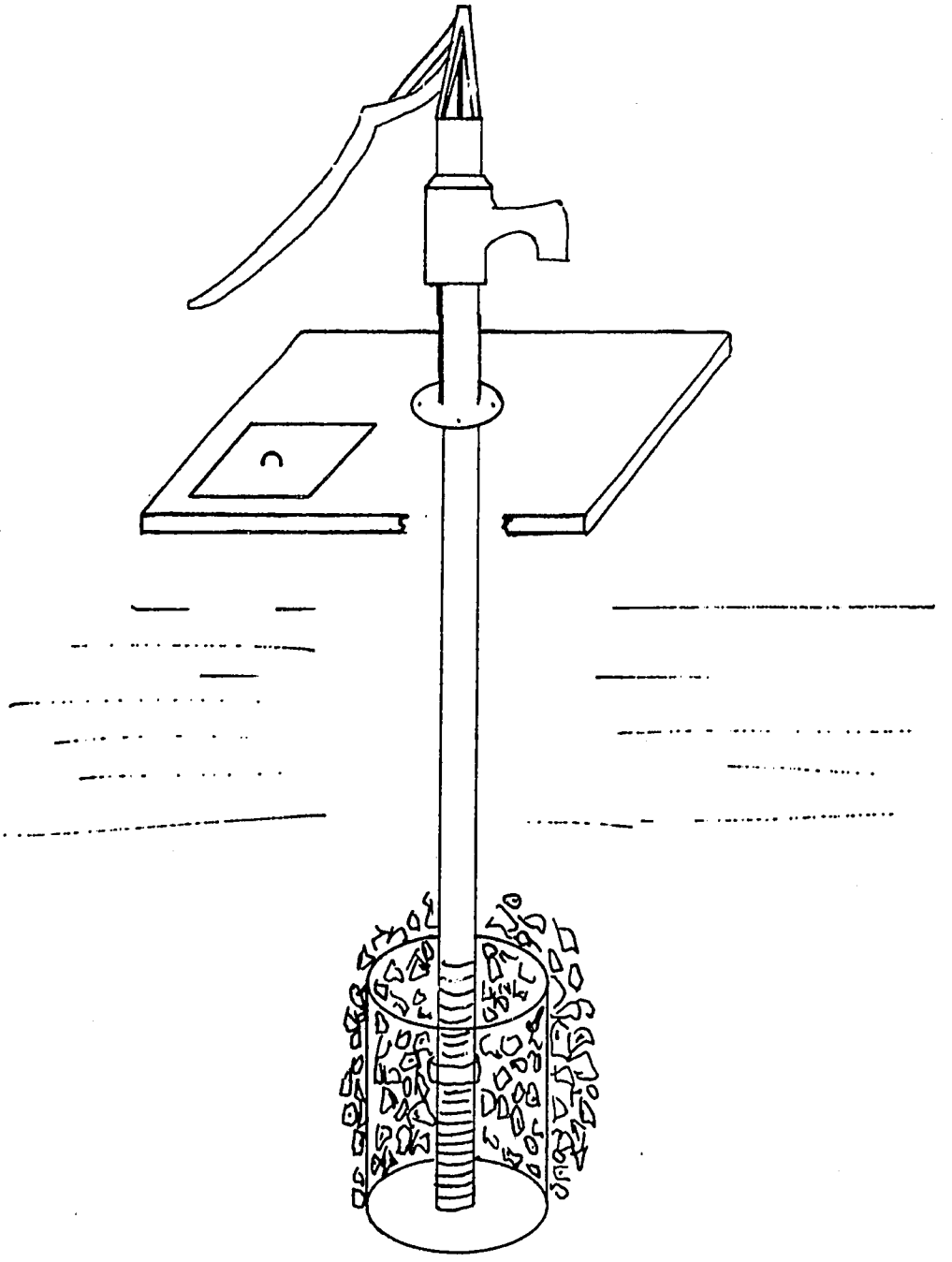

TECHNOLOGY INFORMATION BRIEF

1. Name of Technology: Roboscreen

2. Purpose: A plastic (PVC) slotted pipe which can serve as a well screen, infiltration gallery or intake device in rivers, lakes and reservoirs.

3. Stage of Development: Commercial production is in effect in the Philippines (current output 20,000 ft/year). Small scale production has taken place in Thailand (200 feet). Field tests of the Roboscreeen have not yet been performed.

4. Physical Description: Roboscreen is a PVC pipe (schedule 40) which is broached or extruded with internal ribs using a modified die. Pipe sizes are standard and groves are cut in the die in order to produce the ribs. Size of ribs, number, and spacings vary. The extruded section is machined on a lathe equipped with a circular saw to form a continuous helical cut; the desired slot width is determined by the width of the saw. Approximately 25% of the surface area of the pipe can be removed.

5. How Does It Operate/Function: The Roboscreen is attached to the lower end of the casing of a well and functions as a conventional well screen. In aquifers where fine sand is the predominant feature, the large open area permits slower inflow water velocities thereby preventing sand from entering the pump. Slot size, screen diameter and length of screen are functions of the aquifer material and required discharge.

6. How Can It Be Made: The Roboscreen is produced in two steps: broaching or extrusion and then slotting. Extrusion requires a special die which is a standard pipe die into which groves or channels are cut in order to form the internal ribs. Slotting can be done on a lathe equipped with a grinding head. A circular saw of a desired thickness is attached in place of the grinding wheel. A special slotting machine has been manufactured and is in use in the Philippines (Neltex Manufacturing Co.). The broaching device can be made with $300-400 of materials and about 80 hours of labor in a machine shop. Broaching and slotting Roboscreen requires about one hour of labor per foot. Three inch diameter Roboscreen costs approximately $3 per foot in LDC's. The Roboscreen can also be injection molded.

7. What Is The Market: The Roboscreen can be used in shallow wells (up to 100 feet) drilled into unconsolidated alluvial material. The Roboscreen is particularly suited for domestic wells equipped with handpumps or motorized low capacity wells.

8. Case History Highlights: The Roboscreen is produced commerically in the Philippines and is sold to the government of the Philippines for use in domestic well/handpump installations.

9. Advantages/Disadvantages: The Roboscreen is significantly less expensive than metal well screens. It has also more open area than other types of plastic well screen. The broaching process eliminates the need for special extrusion dies. This is very good potential for making broached Roboscreen in developing countries.

The Roboscreen has not been subjected to any extensive laboratory and/or field tests and its behavior under actual field installations is unknown. The Roboscreen should not be used in installations when the screen is driven into the formation (cable of forced drilling) and is not suitable for deep installations. Some well drillers in LDC's are reluctant to use PVC screens because the installations of such screens requires more care. Training well drillers how to install Roboscreens coupled with favorable field data would accelerate its acceptability.

# Indian Mark II Handpump

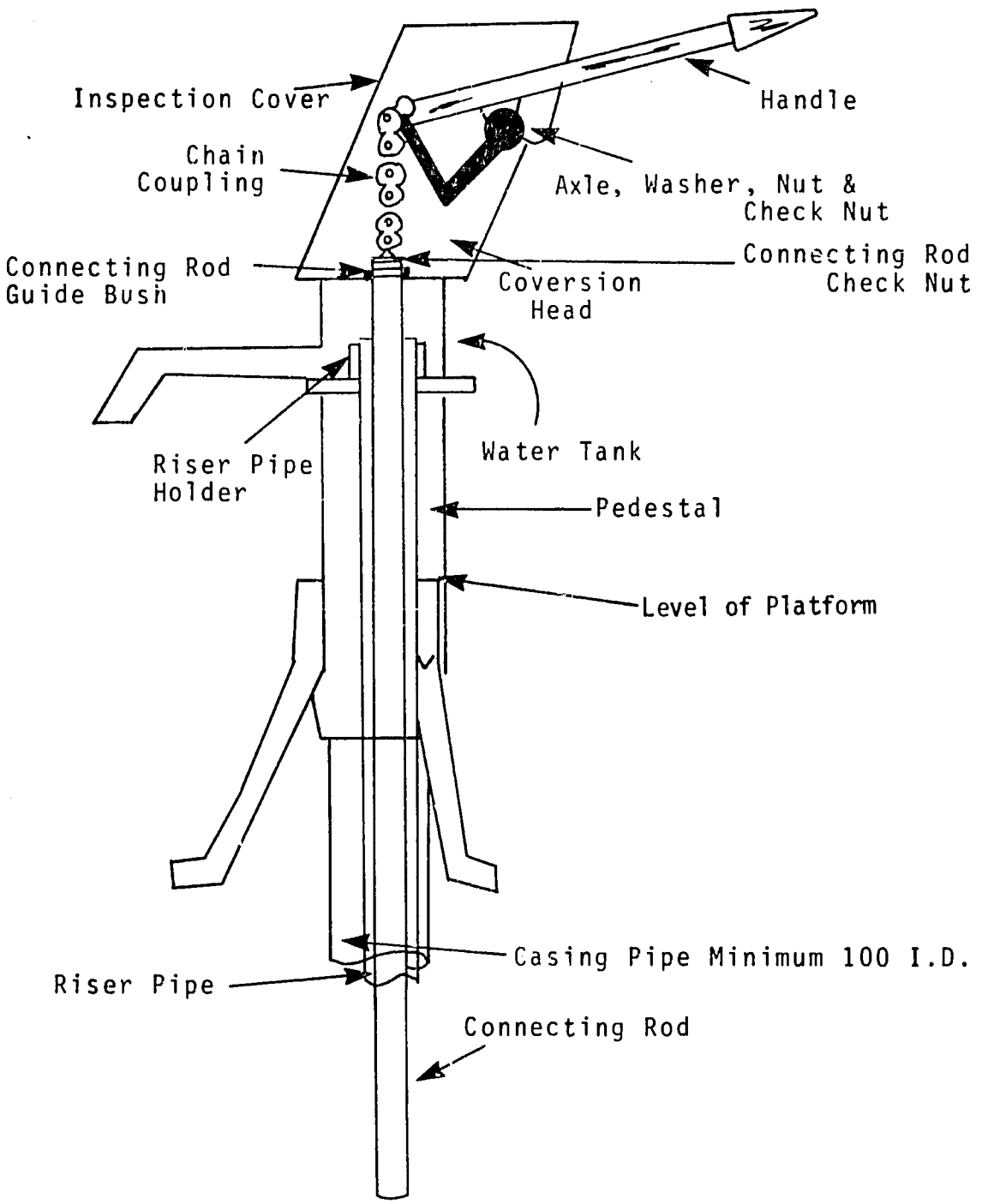

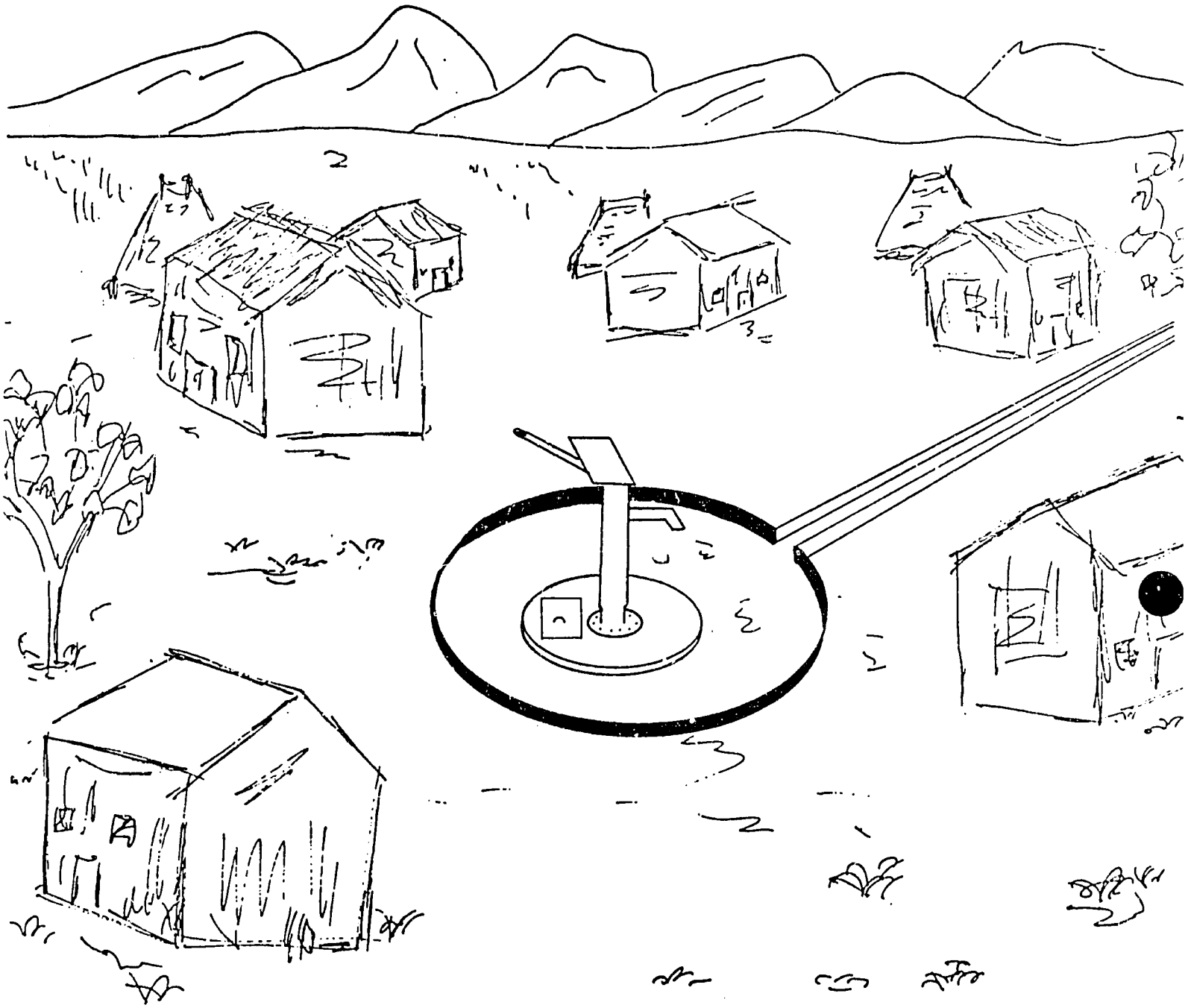

TECHNOLOGY INFORMATION BRIEF

1. Name of Technology: India Mark II Handpump.

2. Purpose: To lift water from a dug or bored well to a container or watering trough. In so doing, the well may be sealed off from external contaminants and the water supply protected.

3. Stage of Development: Currently in mass production in India, the Mark II is exported to more than a dozen countries in Asia, Africa and the Caribbean.

4. Physical Description: The Mark II (see attached sketch) is fabricated mostly from sheet metal with a single pivot handle and chain to draw the plunger (piston) rod upwards. The plunger rod is connected to a piston assembly housed in a cylinder (with a check valve) that connects to a 32 millimeter drop pipe. The handle pivots on sealed ball bearings.

5. How Does It Operate/Function? Like all single-action, reciprocating pumps the India Mark II plunger assembly is raised by lowering the handle. This draws water from the well through an open check (foot) valve into the cylinder and, at the same time, forces water already in the cylinder and the drop pipe up and through the pump spout. The plunger assembly is then returned to the bottom portion of the cylinder (as the handle is raised) by the weight of the plunger, plunger rod and water in the drop pipe.

6. How Can It Be Made? The India Mark II is, as indicated above, fabricated mostly from sheet metal. The present manufacturer is INALSA, located in New Delhi. The sales price is approximately $300, F.O.B. New Delhi.

7. What is the Market? Handpump programs throughout the world need reliable, well built handpumps for installation in rural areas. The Mark II has particular appeal in developing countries because it is made in another developing country instead of an industrialized nation.

8. Case History Highlights: Data is sparse on the history of the Mark II other than its being exported to over a dozen countries. One report indicates that over 40,000 Mark II type handpumps have been manufactured in India as of 1980.

9. Advantages and Disadvantags: The Mark II has an ultimate mechanical advantage of 30:1. The body is sealed against tampering and is made of wear resistant materials. It is operable to depths of 60 meters. However, it does not operate well at depths less than 15 meters because of insufficient weight from the plunger, plunger rod, and water column to push the plunger assembly downward when the handle is raised. Even though developing countries might find it attractive to buy the Mark II from another developing country (India), hard currency would still be needed.

# AID DESIGNED Hand-Operated Water Pump

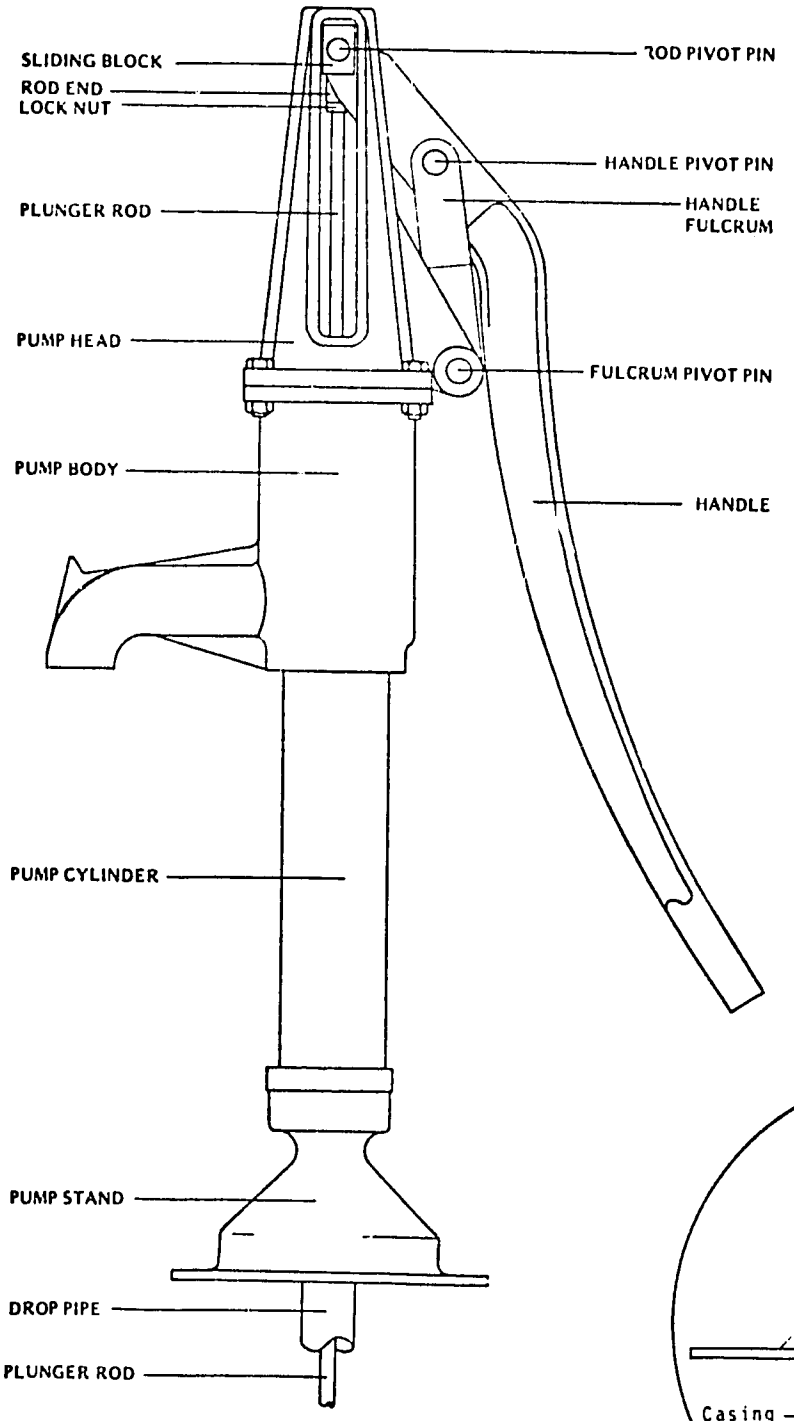


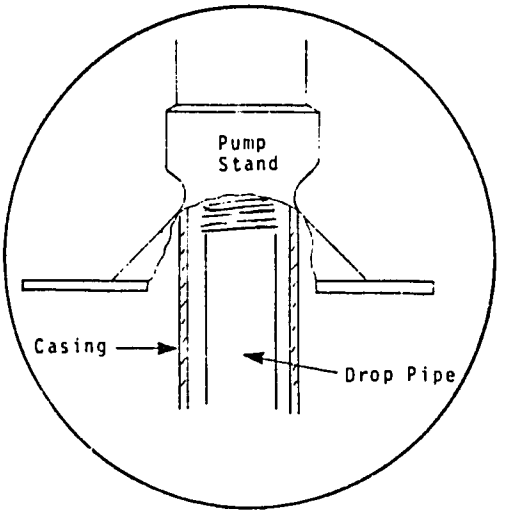

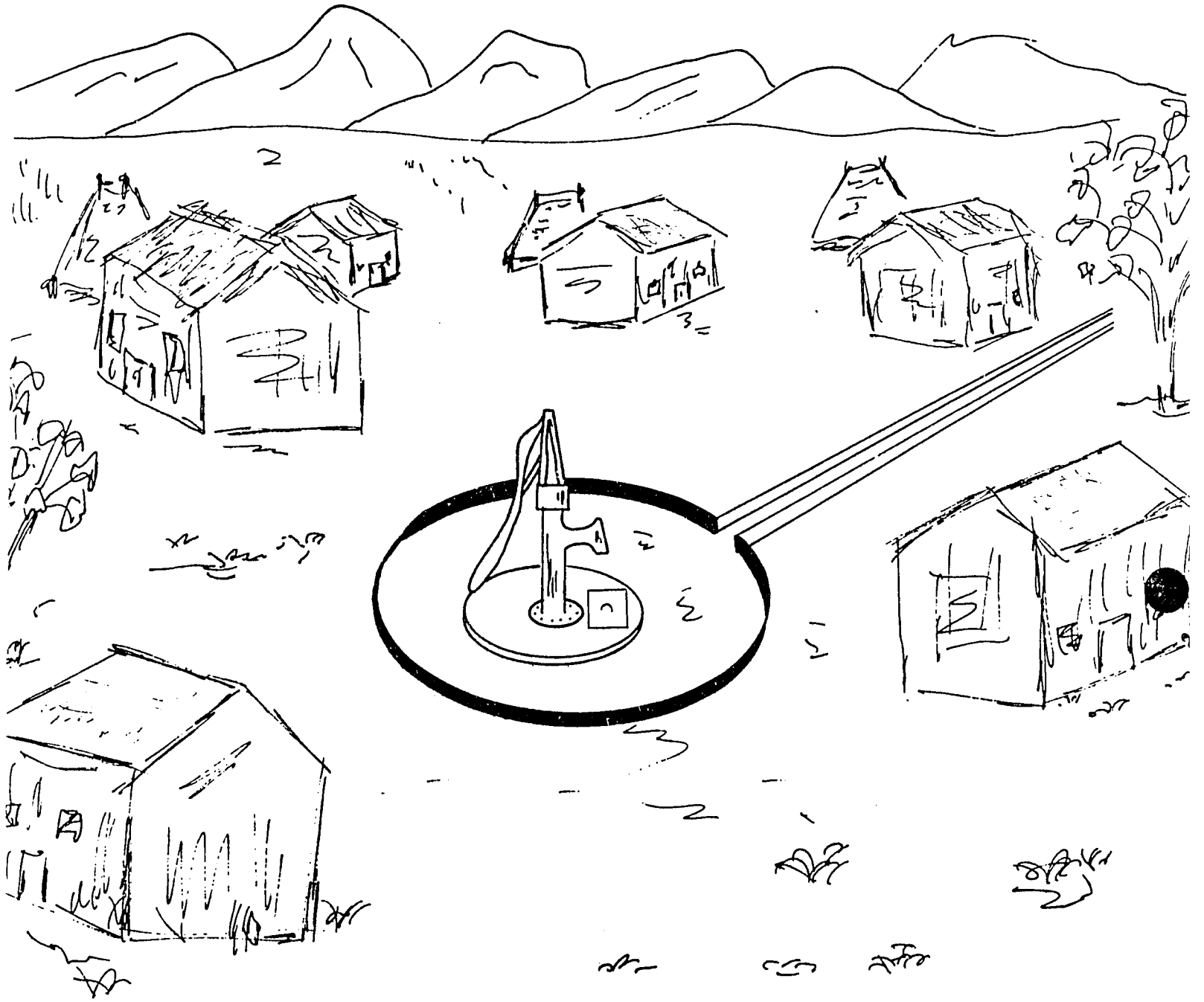

TECHNOLOGY INFORMATION BRIEF

1. Name of Technology: AID Hand-Operated Water Pump.

2. Purpose: To lift water from a dug or bored well to a container or watering trough. In so doing the well may be sealed off from contaminants and the water supply protected. The AID pump normally provides water for domestic consumption.

3. Stage of Development: Designed by the Battelle Laboratories during the 1960's, the AID handpump was first field tested in Nicaragua and Costa Rica in 1976. Since then it has been manufactured in the Dominican Republic, Indonesia, Sri Lanka, Tunisia, Ecuador, Honduras and the Philippines.

4. Physical Description: The AID handpump (see attached sketch) is manufactured in both a shallow-well (not shown on sketch) model and a deep-well model. The above ground components (the pump body) is mostly made from cast iron. In the shallow-well model the brass plunger (piston assembly) and the leather cups operate inside a PVC liner located in the pump body cylinder with backflow being prevented by a check valve (foot valve) in the pump base. For the deep-well model the plunger, PVC liner and foot valve are all located in a cylinder attached to a 1 1/4 inch drop pipe and installed below the well's water level. The plunger is attached to the handle by a 1/2 or 7/16 inch steel rod. Fulcrum pins (hardened to Rc 40-45) rotate in steel bushings (hardened to Rc 60-65).

5. How Does It Operate/Function? For the deep-well model, water is drawn into the cylinder by the upward motion of the plunger. Backflow is blocked by the foot valve during the return of the plunger to its lower position. During each stroke of the plunger, water is drawn into the pump and expelled out the spout. The shallow-well model operates much the same way except that water is drawn up by suction (maximum, seven to eight meters) rather than by being lifted from the upward motion of the plunger. Like all lowcost, easily manufactured reciprocating hand pumps, the AID pump requires maintenance including regular lubrication of pins and bushings and other moving parts, and periodic replacement of the leather cups.

6. How Can It Be Made? The AID handpump can be manufactured by all but the most basic of foundries in developing countries. All components are either cast in iron or brass, or made from stock, galvanized iron and PVC pipe. The use of jigs and fixtures insures interchangeability of parts. The capital cost for the AID pump has ranged from $50-230 depending on the place and scale manufacture.

7. What Is The Market? The AID handpump is intended for rural applications in developing conditions. One pump can serve a cluster of households. The deep well model can be used in wells up to about 150 feet in depth. Training and spare parts are required for pump maintenance and repair.

8. Case History Highlights: As indicated earlier, the AID handpump has now been introduced into Nicaragua, Costa Rica, Dominican Republic, Indonesia, Sri Lanka, Tunisia, Ecuador, Honduras and the Philippines. Approximately 2300 AID pumps are being manufactured and installed in the Dominican Republic 1981-82.

9. Advantages and Disadvantages: Because it is produced locally, the AID pump is generally much less expensive than equivalent imported pumps. Local manufacture also generates employment, reduces the demand for hard currency, and makes spare parts easily available. The AID pump is designed to operate under severe conditions. However, local manufacture also sometimes creates problems in securing necessary materials and supplies in a developing country (PVC pipe for the cylinder liner, hardened pins and bushings, good leather for flapper type food valves, etc.), and in quality control.

# Moyno Rotary Handpump

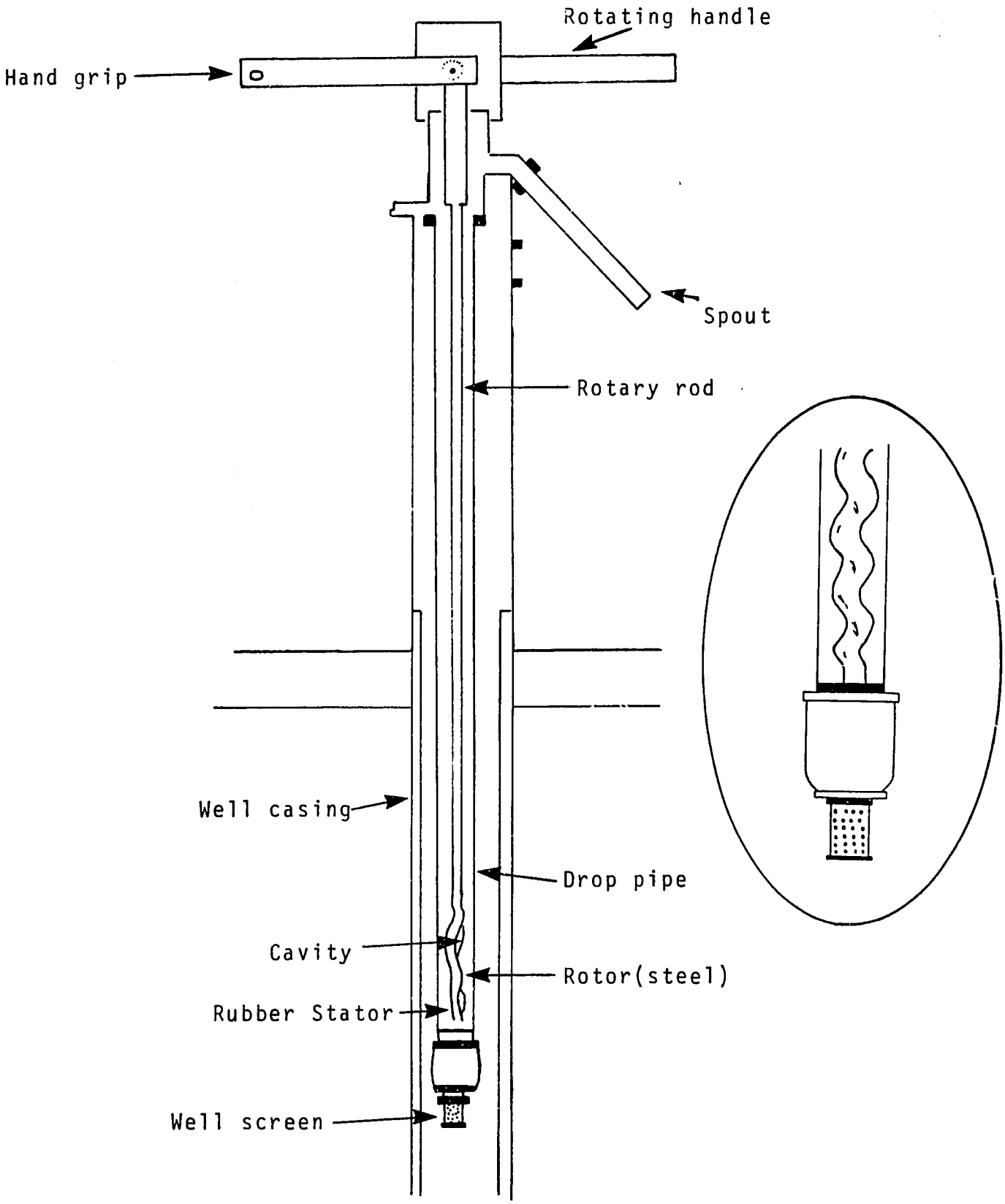

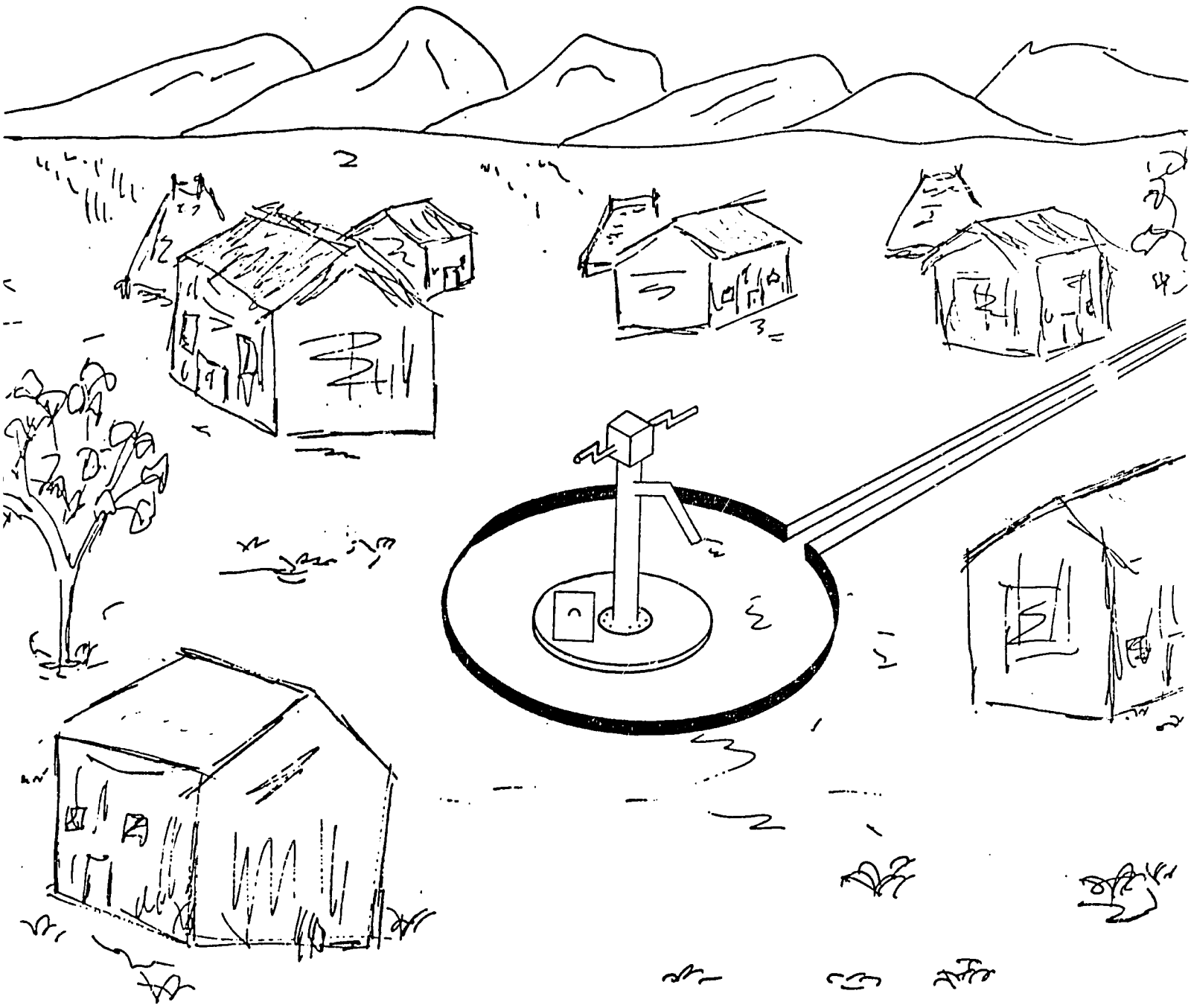

TECHNOLOGY INFORMATION BRIEF

1. Name of Technology: Moyno Rotary Handpump.

2. Purpose: To lift water from a dug or bored well to a container or watering trough. In so doing the well may be sealed off from contaminants and the water supply protected.

3. Stage of Development: The Moyno handpump is currently manufactured in the United States as well as in the United Kingdom (where it is called the Mono handpump) and is marketed throughout the world.

4. Physical Description: The pump body is made of heavy guage steel pipe and plate. Two handles rotating in a vertical plane turn a 90° level gear attached to a 1/2 inch drop rod within a drop pipe (usually 1 1/4 inch). The rod turns a single helix steel rotor. A rubber stator is attached to the drop pipe.

5. How Does It Operate/Function? The turning of the rotor within the double helix stator forces water up the drop pipe while preventing back flow at the same time. Thus, the pump operates in only one direction without reciprocation. The Moyno pump delivers 2.5-4.0 gallons per minute depending on delivery head and handle speed.

6. How Can It Be Made? The Moyno rotary handpump is manufactured by the Robbins and Myers Company, Springfield, Ohio. Because of the close tolerances needed in the fabrication of the rotor and stator it does not lend itself well to manufacture in developing countries. However, the upper structure (the pump body) can be easily manufactured using indigenous resources.

7. What Is The Market? The Moyno pump is particularly applicable for very deep wells (200-300 feet) where maintenance is usually a major problem.

8. Case History Highlights: The Moyno pump was developed in the United States. However, it is now being used in numerous developing countries because of its durability and low maintenance requirements. Approximately 1200 Moyno pumps were installed in Nigeria as of 1977.

9. Advantages and Disadvantages: The Moyno pump appears to be very durable and as indicated above, has low maintenance requirements. As advertised, the Mayno pump is much more appropriate to very deep wells than conventionally reciprocating pumps. Its design also resists vandalism.

   The Moyno pump is somewhat expensive, approximately $500 per pump, and may be beyond the reach of many communities in developing countries. Because of close tolerances needed for installation the manufacturer suggests that drop pipe and rod be precut at its factory, thus, indigenous labor is restricted to installation, maintenance, and repair functions. Also, due to excessive stress on the pump components, tripods are necessary for pulling up drop pipe, etc.

# Hydraulic Water Ram

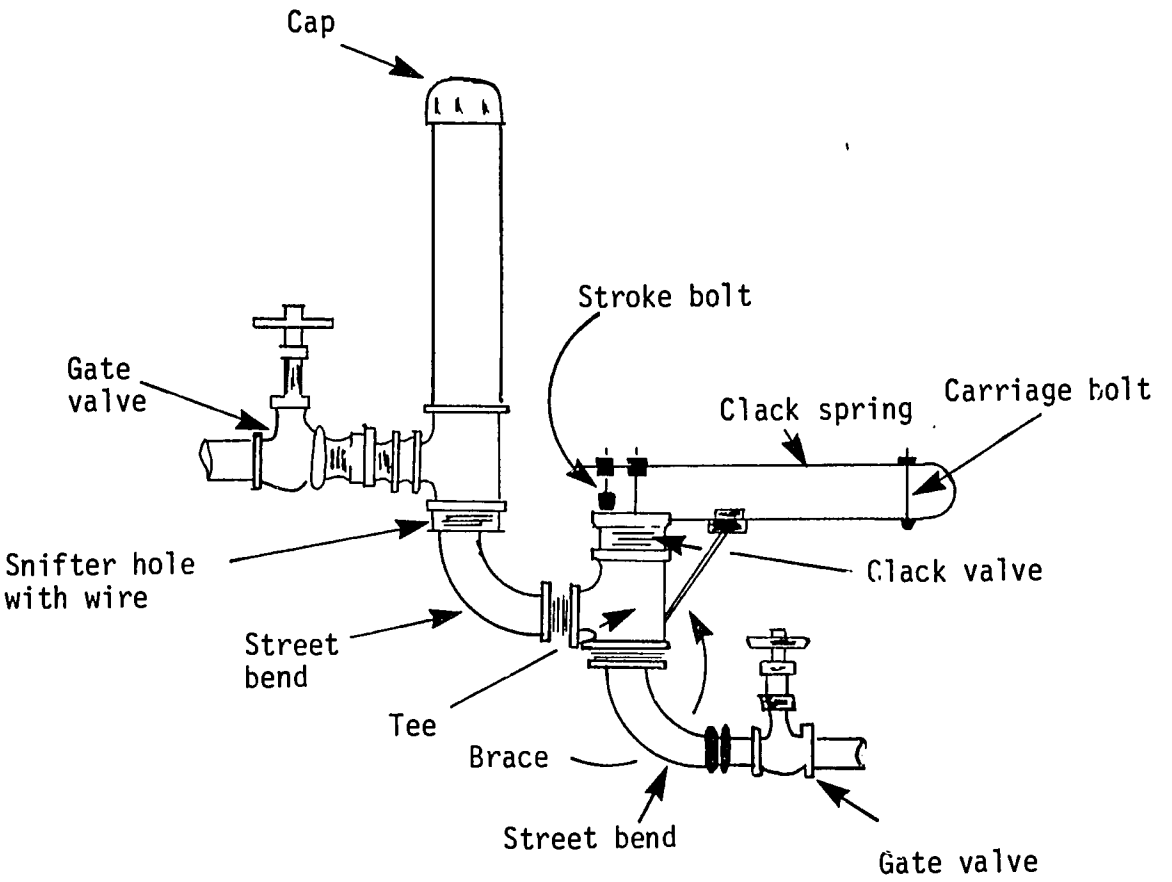

TECHNOLOGY INFORMATION BRIEF

1. Name of Technology: Hydraulic Water Ram.

2. Purpose: To life water to a higher elevation (for instance, to an elevated storage tank) by using the pressure differential between the elevation of the ram and that of the water source. The portion of the falling water which is pumped up depends on the ratio of the vertical fall to the vertical lift. A standard hydraulic ram can deliver approximately 22% of the water when the lift is twice the fall, about 12% for a lift five times the fall and about 6% if the lift is ten times the fall. A lift of up to 25 times the fall can be obtained.

3. Stage of Development: The hydraulic ram was invented over 150 years ago and has seen wide application in rural areas of both developed and developing countries ever since. Rams are commercially available in various sizes depending on the head, the rate of water flow, and the desired lift. It is also possible to assemble a hydraulic ram from regular plumbing fittings.

4. Physical Description: As seen in the attached sketch, rams basically consist of spring-loaded clack valve, a check valve and a sealed air dome. Gate valves at either end facilitate installation and control flow. Hydraulic rams are normally made of iron or steel; metal or plastic piping is also used.

5. How Does It Operate/Function? The clack valve is open at equilibrium until the velocity of water passing by it causes it to close. The water that can no longer escape is forced by the check valve into the air dome, thus compressing the air which acts as a spring and sends the water out the delivery pipe. When the check valve closes, the clack valve is once again at equilibrium and the cycle starts again. The valves open and close 25-100 times per minute during operation. The hydraulic ram is started manually but then runs unassisted.

6. How Can It Be Made? Hydraulic rams can be mass produced by foundry/machine shops or they can even be made in the home by using plumbing fixtures and a minimum of machinery. The cost range is about $80-100 for do-it-yourself rams. In the U.S., commercial rams cost $200-$300 excluding piping.

7. What Is The Market? Hydraulic rams are attractive wherever there is a constant supply of water at a minimum head of 2-3 feet which must be raised to a higher elevation for use. Hydraulic rams are typically supplied with water from a stream, spring or creek where the flow is at least 1.5 gallons per minute. It is also possible to lift potable water using non-potable water from a higher elevation using a double acting ram.

8. Case History Highlights: Hydraulic rams have been numerous commercial and private applications throughout the world. One company (Rife Rams) has sold over 30,000 rams over a period of nearly 100 years.

9. Advantages and Disadvantages: The hydraulic ram requires no external energy source other than flowing water and is continually operable, requiring no attention unless the water supply is interrupted. Hydraulic rams are best suited to locations where there is a plentiful supply of water and a natural variation in elevation. An elevated tank is required for water storage. Hydraulic rams also produce a continuous noise due to the slamming of the valves.

# Siphon Activated Hydropneumatic Pump (SAHP)

## WORKING MODEL

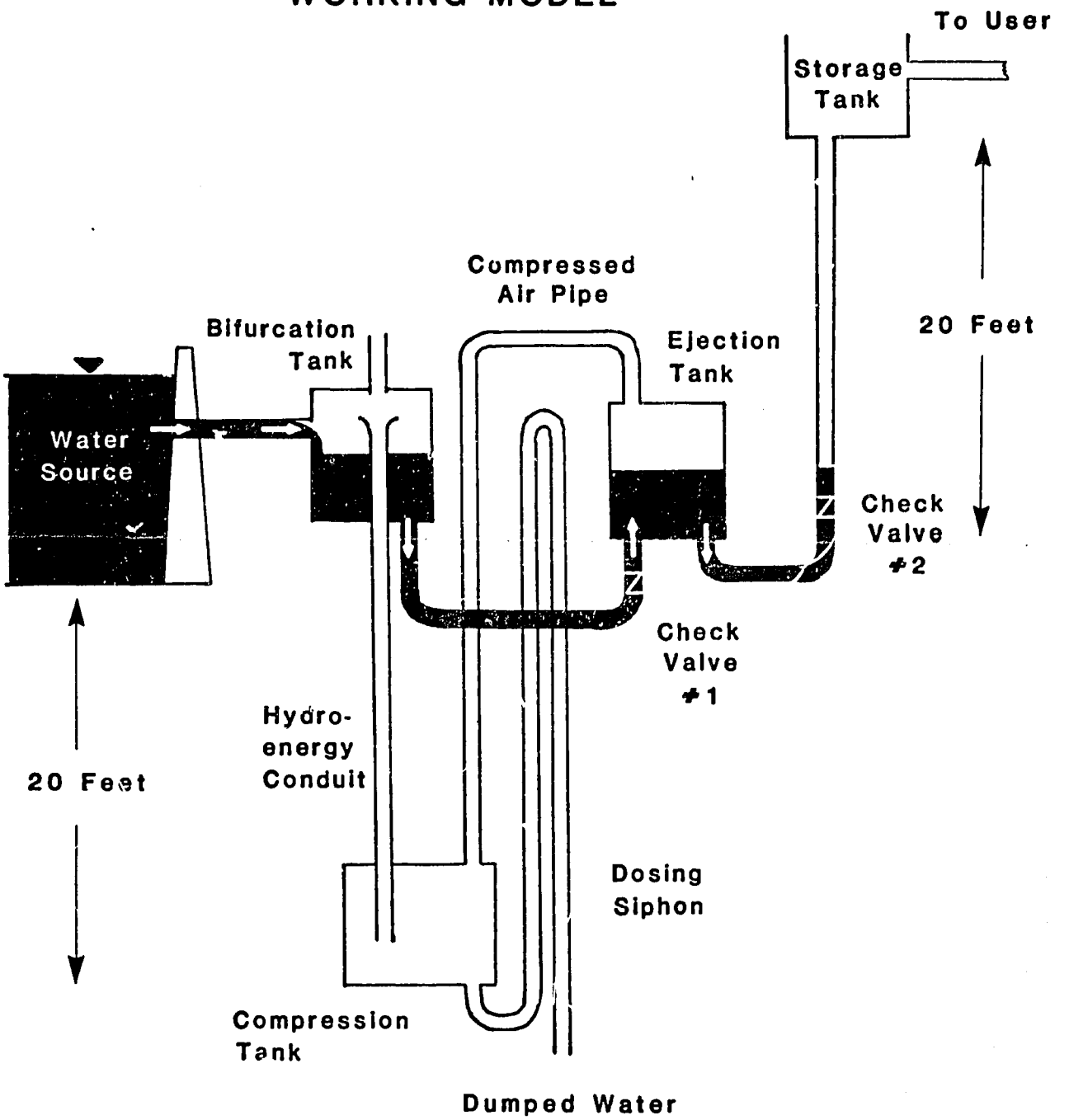

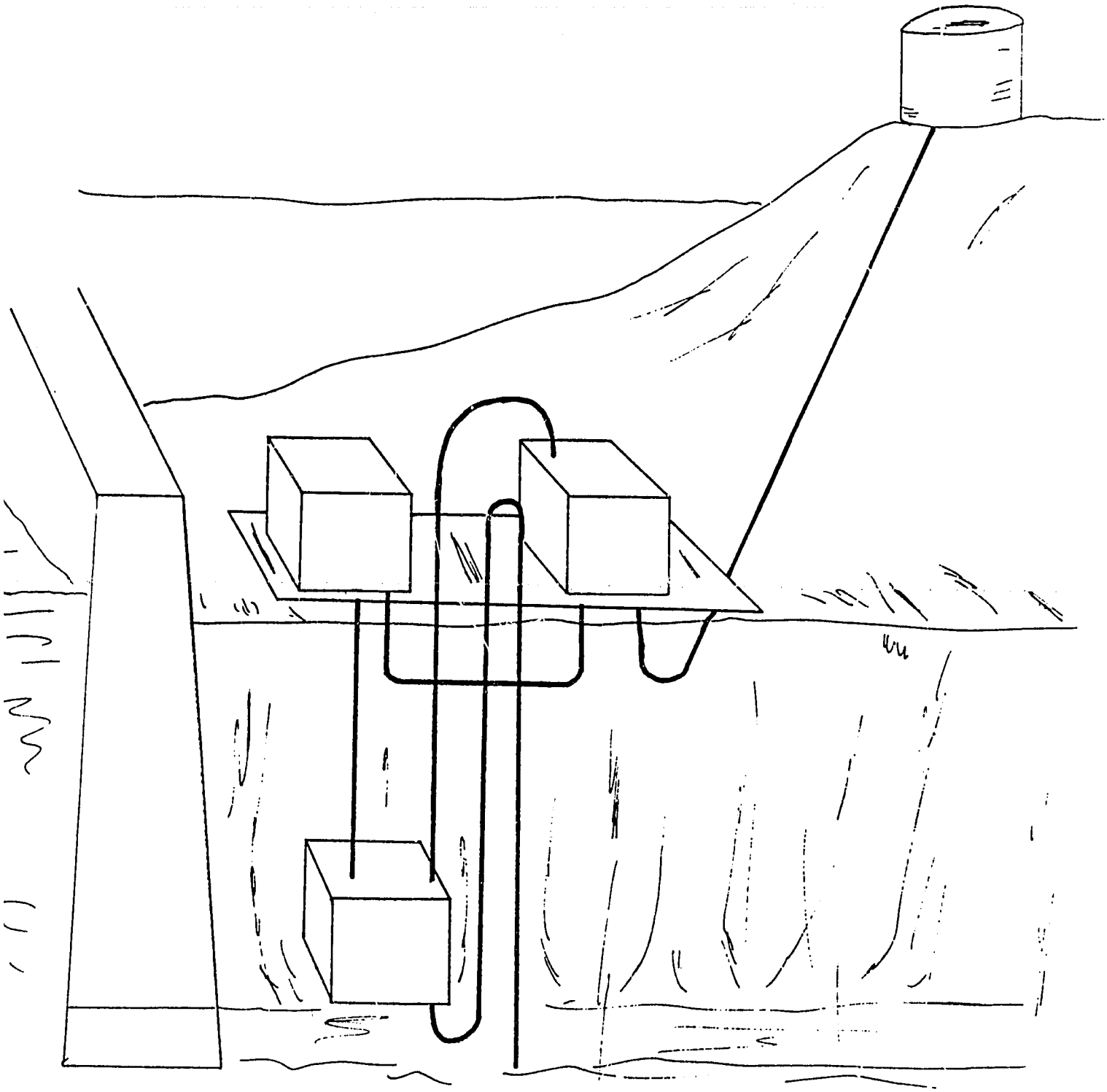

Water Lifting from Dam Site using
Sinhon Activated Hydropneumatic
Pump

TECHNOLOGY INFORMATION BRIEF

1. Name of Technology: Siphon Activated Hydropneumatic Pump (SAHP).

2. Purpose: To lift water from a reservoir or impound area to a storage tank by using the energy of falling water.

3. Stage of Development: Some prototypes exist. A similar device known as the Cherepnov lift has been developed in Russia.

4. Physical Description: The pump consists of three tanks, two check valves and interconnecting piping. Appropriate fittings and tank support structures are also required. The compression and ejection tanks must be air-tight; therefore, they should be metal or plastic.

5. How Does It Operate/Function: As the bifurcation tank fills from the source, so does the ejection tank by way of check valve #1. When the ejection tank is filled, water begins to flow down the vertical hydro energy conduit into the compression tank. Since the displaced air cannot escape by any other means, it goes through the compressed air pipe into the ejection tank, thus forcing the water out past check valve #2 and into the storage tank. As the compression tank is filled, water is also forced up the dosing siphon until the compression tank and siphon are completely filled. Then, water from the compression tank is released through the siphon to complete the cycle. For pumping water to heights greater than about 27 feet, a dump valve must be used rather than a dosing siphon. For a lift of about 30 feet, about 50% of the water released from the source is raised to the storage tank.

6. How Can It Be Made? Hydropneumatic pumps lend themselves very well to local fabrication using 55 gallon drums and common plumbing supplies. Mass production is not practical since the pipe size and length vary from site to site, requiring each installation to be custom made.

7. What Is The Market? The hydropneumatic pump can be advantageously employed as long as 1) there is a generous supply of water part of which must be lifted to a higher elevation and 2) there is vertical drop in elevation from the water source for locating the hydro energy conduit and compression tank. Such situations are available at dam faces and in mountainous areas where the stream flow may be diverted to a point of vertical drop near the intended recipients. The drop in elevation from the source to the compression tank must be equal to or greater than the height between the source and the storage tank.

8. Case History Highlights: None currently available.

9. Advantages and Disadvantages: Operating and maintenance costs for the delivery system should be minimal. Capital cost will depend on the materials used and local materials and labor costs. The system's life, using quality materials, could be as high as 20 years. Experience in designing constructing, and operating the SAHP is still needed.

# Robovalve

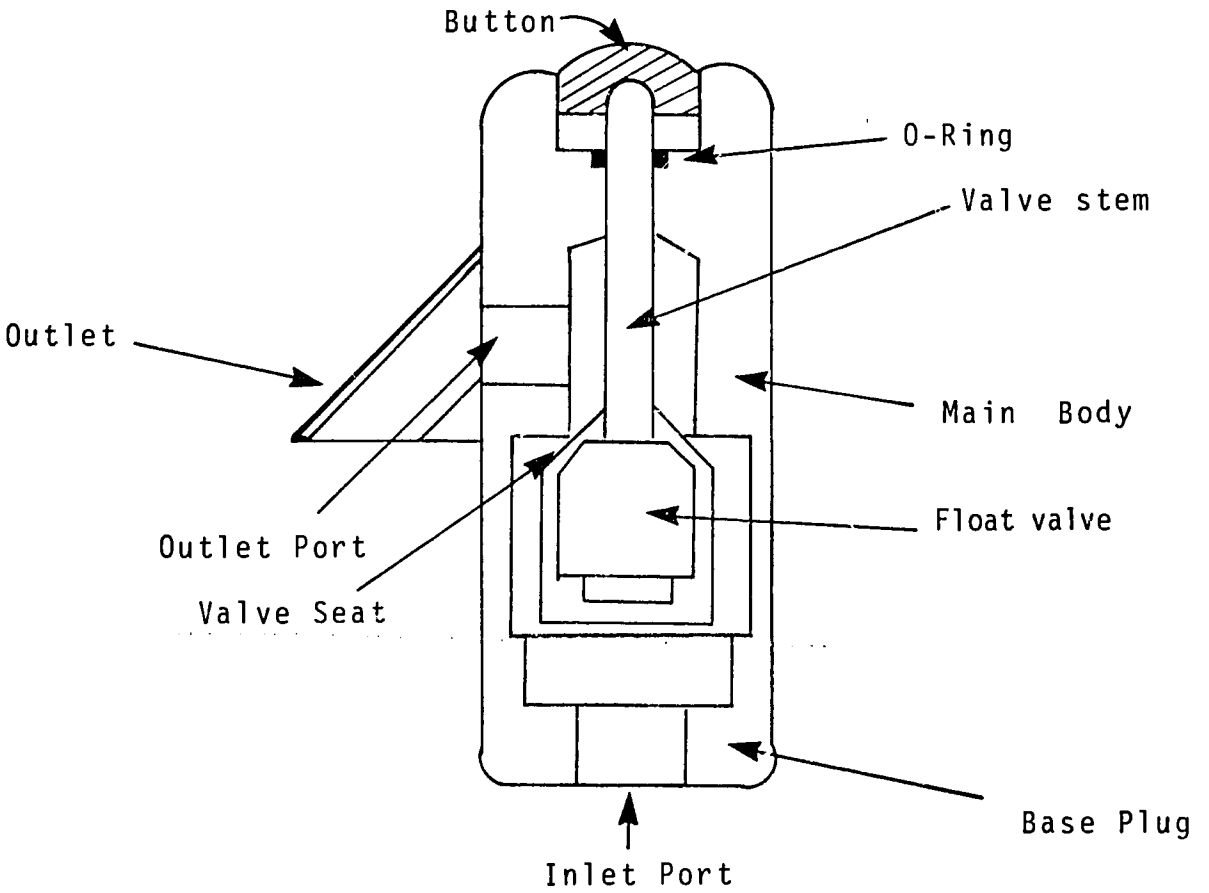
Button
O-Ring
Valve stem
Outlet
Main Body
Float valve
Outlet Port
Valve Seat
Base Plug
Inlet Port

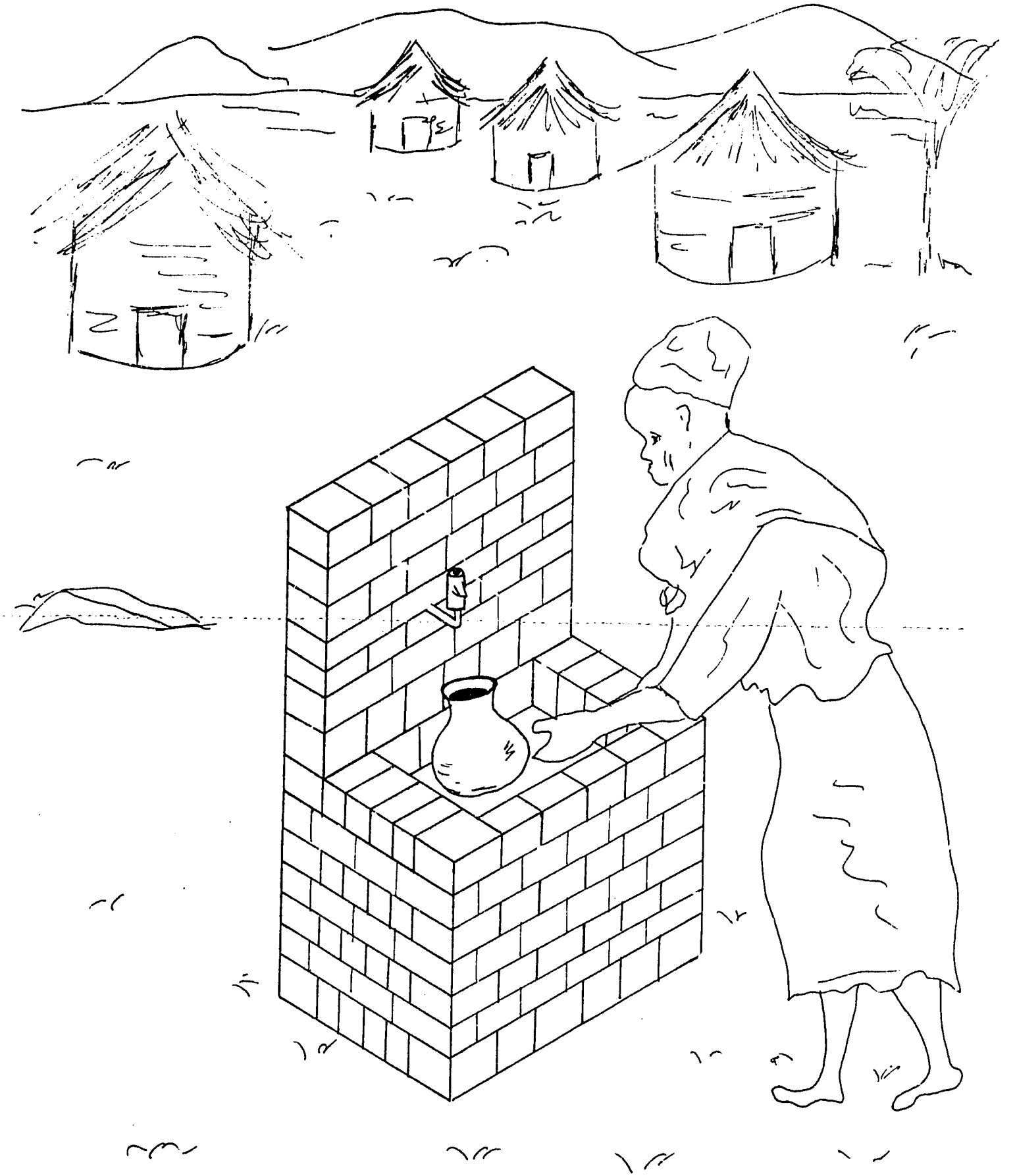

TECHNOLOGY INFORMATION BRIEF

1. Name of Technology: Robovalve.

2. Purpose: To precent unnecessary waste of water, particularly around public standpipes.

3. Stage of Development: Extensive laboratory testing has been conducted. The valves are now being commercially produced in Ecuador, the first developing country where such a venture has taken place. No meaningful field testing has been done.

4. Physical Description: The Robovalve is a self-closing water faucet which is constructed entirely of plastic (P.V.C. or A.B.S.) except for a butane 'O' ring. Three models have been made to date. A public standpipe, a household or patio type, and one for in-house water containers.

   The Robovalve has two major components: the float valve, and the casing which houses the valve seat. The assembly is a plastic housing with a water chamber and a valve seat. The float valve is a hollow plastic cylinder with a 45° cone and a valve stem on end. The stem travels in a guide provided in the casing.

5. How Does It Operates/Function? As shown in the drawing, the Robovalve has a float valve with an activating button, an inlet, a valve seat, and an outlet.

   The concept of the Robovalve is simple: use is made of two basic principles buoyancy and pressure differential. Under no-water-in-the-pipe condition, the valve rests in the open position. As water enters through the inlet, the float valve (which is buoyant) rises into position on the valve seat. The water pressure acts on the float forcing it against the valve seat. The float valve experiences a pressure differential above and below the seat; atmospheric pressure above the valve seat, and line pressure below.

   To activate or open the valve, the user simply depresses the button/float valve. When the valve moves downward, away from the valve seat, water will flow through the valve. On releasing the button the valve will return to the closed position on the valve seat. Robovalves function with water pressures on nearly zero minimum and 40 psi or greater maximum.

6. How Can It Be Made? The valve can be made in different ways, but undoubtedly the best method is by injection molding. Cost estimates per piece from plastic manufacturers in developing countries vary from U.S. $0.53 to U.S. $1.65.

7. What Is The Market? The market exists anywhere in the world where there is a need for a low cost, self-closing faucet. It can be applied to piped systems, storage tanks, or gravity flow systems.

8. Case History Highlights: None to date.

9. Advantages/Disadvantages: As the Robovalve is free of springs, levers or any other part that might wear out, a lengthy maintenance-free life can be expected. Since the valve is self-closing, it should save water by preventing faucets from being left open. The Robovalve will also minimize the gathering of contaminated surface water around public stand pipes. A significant advantage of the Robovalve is its low cost. A major disadvantage is that the user has only one free hand as the valve has to be held in the open position.

# Fordilla Automatic Closing Water Valve

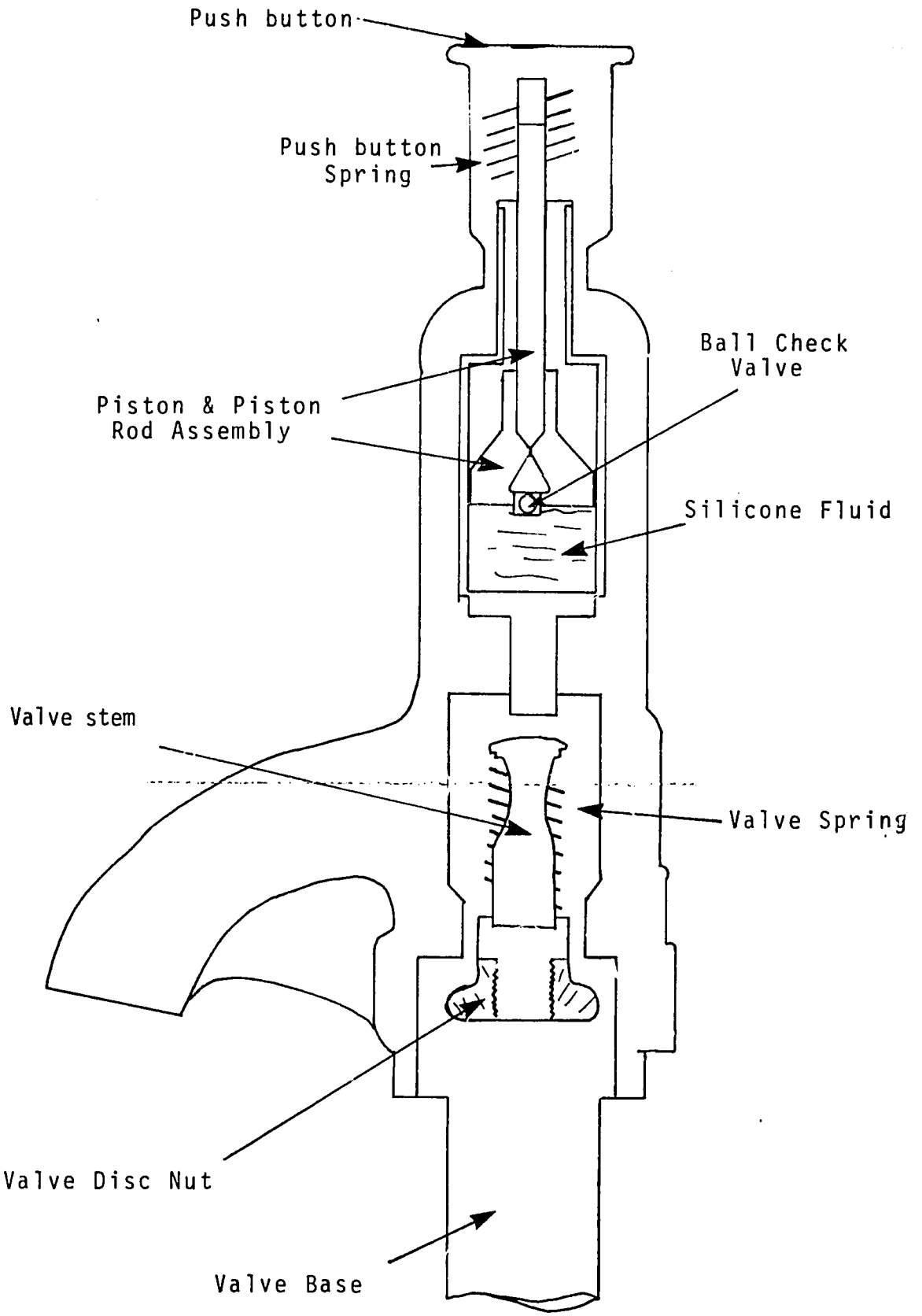

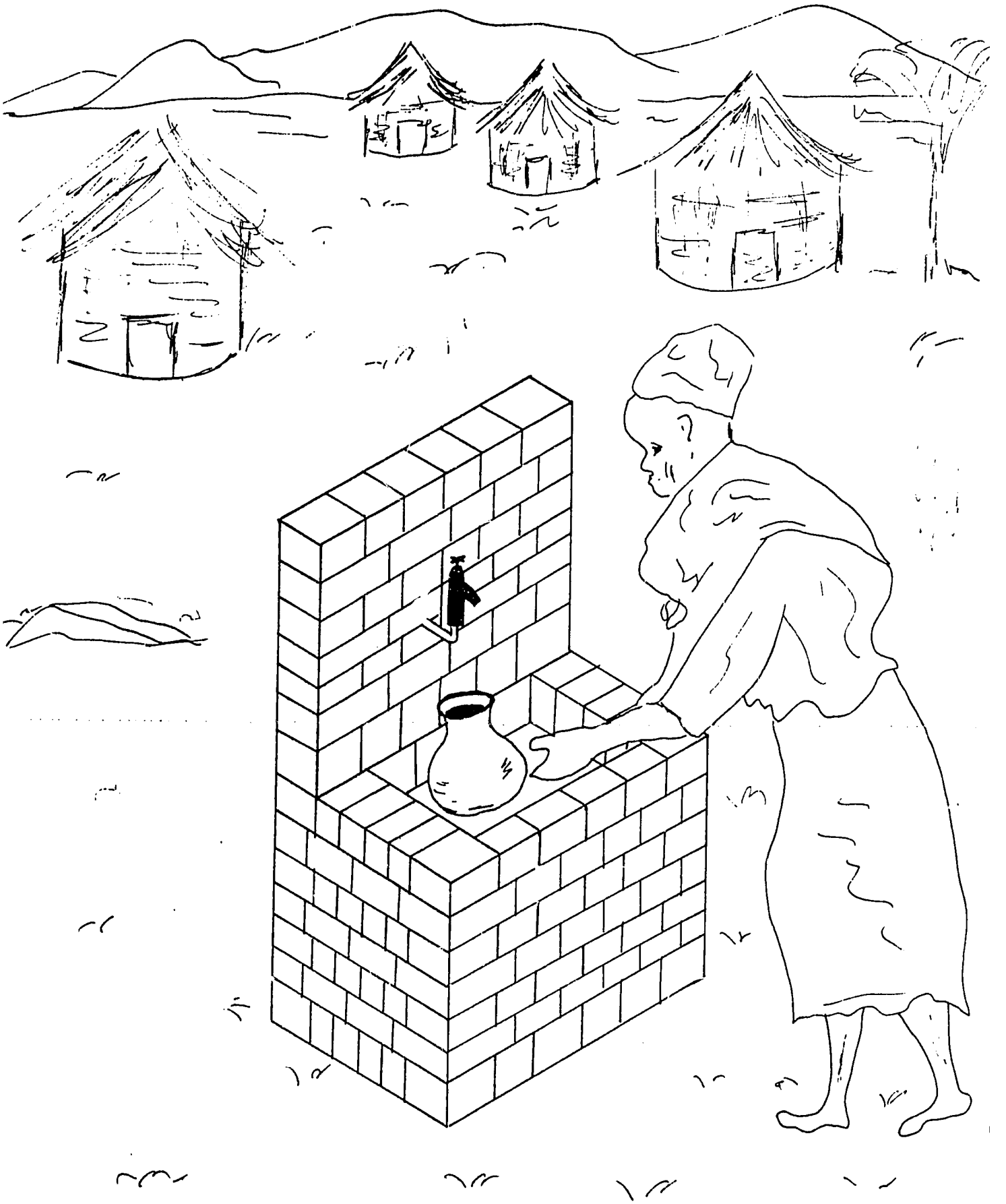

TECHNOLOGY INFORMATION BRIEF

1. Name of Technology: "Fordilla" Automatic Closing Water Valve.

2. Purpose: The purposes of this device are 1) to limit the amount of water that can be obtained in one operational cycle of the valve to approximately 2-3 litres, and 2) to prevent continuous flow of water through the valve --- it cannot be locked, tied or jammed open.

3. Stage of Development: This is a commercially available device that can be purchased from the Ford Meter Box Company, Inc. of Wabash, Indiana.

4. Physical Description: The Fordilla is a type of water dispensing faucet made from a single piece of cast iron, heavily galvanized with brass interior working parts. It is about seven (7) inches high, is spring loaded and uses silicone fluid flowing through a ball check valve to actuate a cylinder that stops the flow of water. The Fordilla is threaded for vertical attachment to a 3/4" or one inch iron or PVC plastic pipe supplying water at 9 psi to 90 psi.

5. How Dies It Operate/Function? The design of the Fordilla is such that the pressure on the top button is transferred to the valve through a dashpot containing a small volume of silicone. When the top button is pushed down to open the valve a spring is compressed, which immediately puts pressure on the dashpot and causes the silicone to leak past the piston and the valve to close slowly. Releasing the top button of the Fordilla causes the silicone to flow quickly through a small check valve to the underside of the piston, completing the cycle. The exact amount of water delivered per push is immaterial as the flow can be repeated immediately and continued as long as desired. The Fordilla cannot be left open or tied open. The Fordilla is considered quite reliable and trouble free. Maintenance and parts replacement is easily accomplished with tools provided in a repair kit. Fordilla valves are used along with one relatively small supply line (approximately one inch in diameter) serving 30-60 households. A central meter can also be utilized.

6. How Can It Be Made? The cast iron, brass and other components of the Fordilla can be made using standard foundry, plastic and machine shop techniques. While the Fordilla mechanism may no longer be covered by a patent, a license to obtain necessary production "know-how" to insure quality products is advisable. Current prices for U.S. Fordillas in quantities of 1,000 units or more is $22.00 net each, FOB USA Port. It is to be expected that local manufacture under a suitable license would be considerably cheaper.

7. What Is The Market? The market for the Fordilla is homes, standpipes, public showers, and other water dispensing locations and facilities where it is necessary to conserve water and prevent the formation of disease breeding standing puddles of water.



18

8. Case History Highlights: There is some material available about the use of Fordillas in Guatemala and in Paraguay. By using small distribution lines and dispensing with household meters, the total capital cost for Fordilla valve systems in Asuncion, Paraguay, was much less than conventional water supply systems. Also, measurements in Asuncion showed that average water consumption with the Fordilla valve was less than 30% of the average consumption with conventional piped-water system connections.

9. Advantages and Disadvantages: The Fordilla is a useful and reliable water conservation device. It is easy to use and maintain and is long lasting. The price quoted above can be a serious obstacle to widespread use although total water supply system cost can be reduced by using Fordilla valves. It may be possible to substantially lower the price of Fordilla valves by utilizing local manufacture. If this is achieved, the Fordilla could merit intensive promotion and marketing efforts in a number of developing countries.

# Pour Flush, or Water-Seal Latrines

Raised Pour Flush Toilet

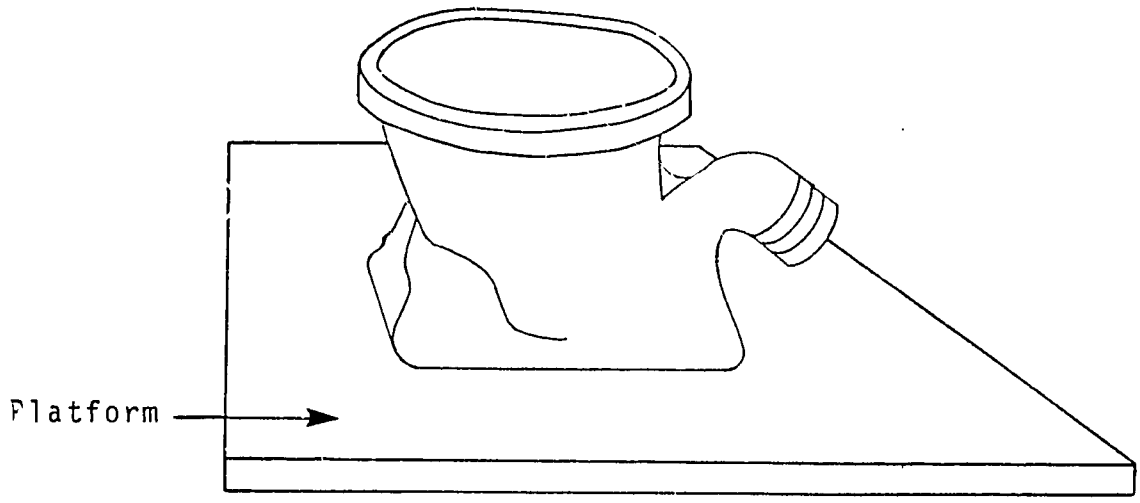


Pour Flush Toilet with Squatting Plate

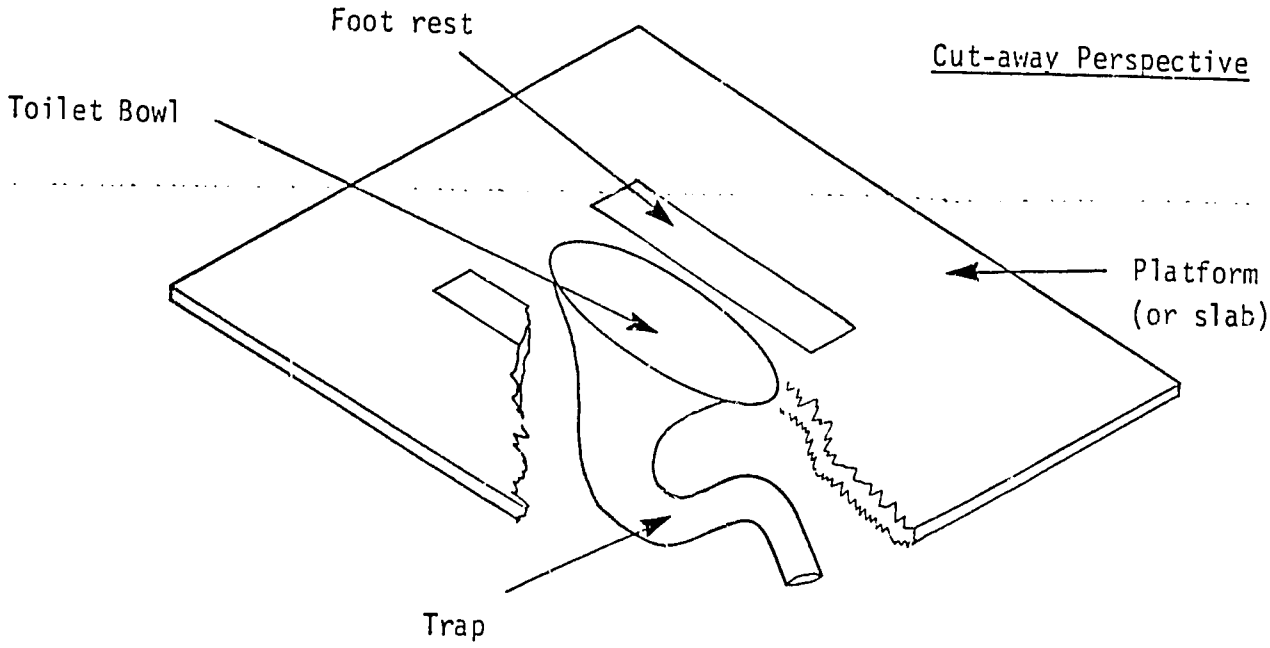

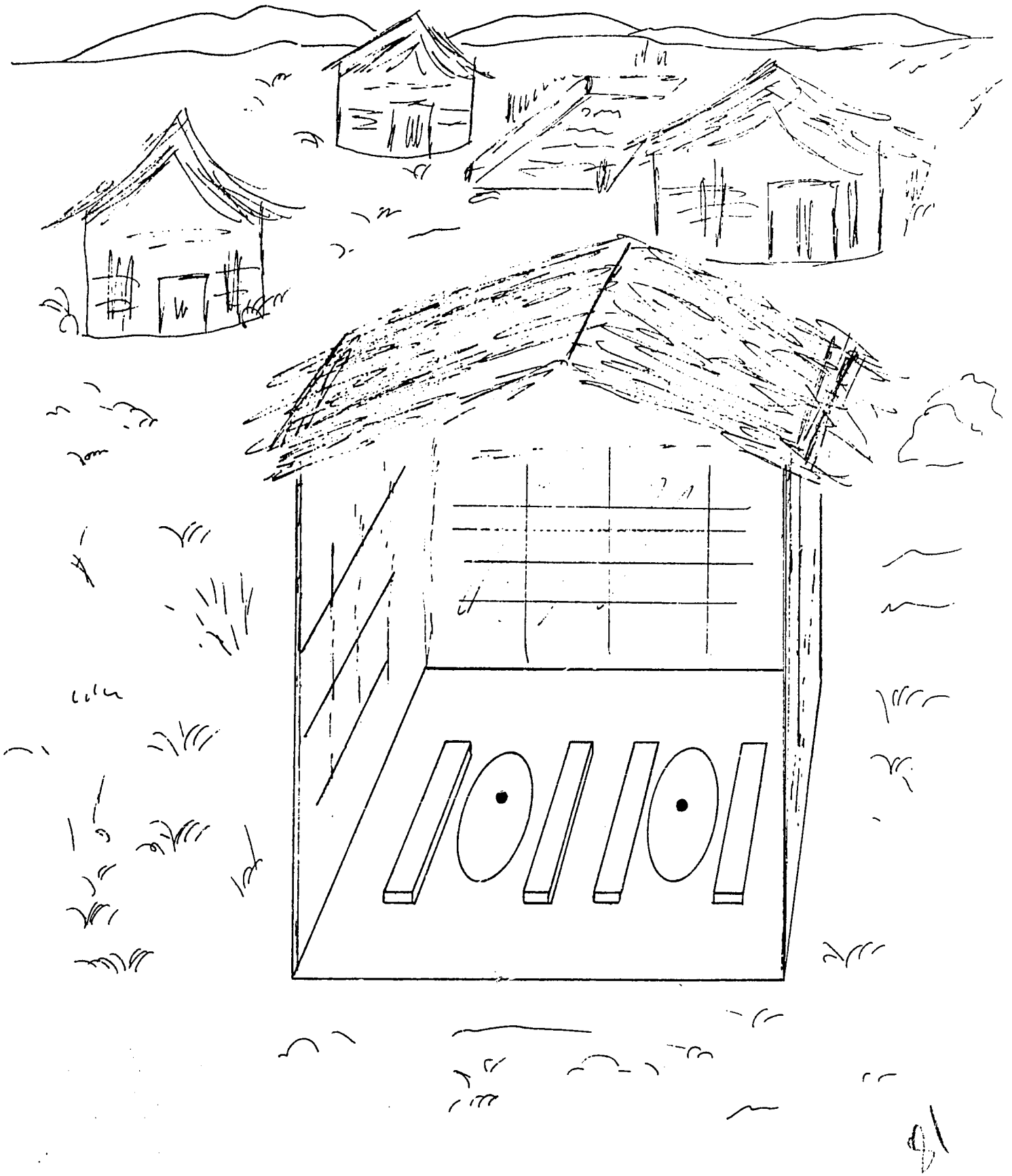

TECHNOLOGY INFORMATION BRIEF

1. Name of Technology: Pour-flush, or water-seal, latrine.

2. Purpose: The purpose of this device is to provide a sanitary, odor-free, method of human waste disposal.

3. Stage of Development: Pour-flush latrines have been used for forty years in Asia and also in Latin America. The designs are straight forward, tested in practice, and are suitable for local fabrication, construction and installation.

4. Physical Description: The pour-flush latrine consists of a squatting plate, which may be made of concrete, into which a water-seal bowl is incorporated. Rather than a squatting plate, the water-seal bowl may be incorporated in a pedestal mount upon which users sit. The water-seal bowl may be made of concrete, ceramics, fibre glass, or galvanized sheet metal. Units may be installed inside in houses or in separate locations.

5. How Does It Operate/Function? The water-seal bowl is designed to hold one to two litres of water. After depositing excreta, the user pours in another one to two litres of water to flush the waste into a seepage pit, vault or septic tank. The stored waste is removed on a periodic basis, or the pit is sealed and the slab moved to another site. A 150 cubic foot pit can serve a household of 8 for about 10 years before emptying or replacement is necessary as long as the pit is constructed in permeable soil. To minimize odors and insect breeding, users must flush each time and keep the latrine area clean. About 3-6 liters of water per capita are needed daily.

6. How Can It Be Made? The pour-flush latrine slab and water-seal bowl can be molded or cast in a variety of materials - concrete, ceramics or fibre glass. The bowl may also be constructed of galvanized sheet metal. Concrete pourflush latrines and slabs can be fabricated at the point of use by the local commuity. In some countries, water-seal bowls of ceramics or fibre glass are available commercially and can be incorporated by users into locally fabricated squatting plates or slabs. Relatively unskilled labor can be used for local fabrication and construction. For location outside of the house, a latrine superstructure is generally required. A variety of materials including those locally available such as brick or wood can abe used to construct the superstructure. The World Bank has estimated that pour-flush latrines may cost from $75 to $225 (including superstructure).

7. What Is The Market? Pour-flush latrines can be used wherever water is available and soil or waste disposal conditions are suitable. They can be used inside or ourside of dwellings in urban peri-urban or rural areas. Due to space requirements for the pit, pour-flush latrines are not suited to very high density areas.

8. Case History Highlights: As indicated above, pour-flush latrtines have been in use for forty years and have recently received intensive study by the World Bank. They are a proven, low-cost sanitation technology that merits wide-spread promotion.

9. Advantages and Disadvantages: Advantages of pour-flush latrines include possible location inside dwellings, no odors or mosquito/fly breeding, low level of municipal involvement, low costs, ease of construction and maintenance, safe for children and high potential for upgrading to sewered systems. Disadvantages are that 3-6 litres of water per capita are required daily and that the waste pit must be periodically emptied or a new one built. Pour-flush latrines do not accept large bulky items such as corncobs or mudballs used for anal cleansing so that user cooperation and training are required in some parts of the world. Experience has also shown that pour-flush toilets are not suitable for community or public use.