PN AAR-676

Appropriate Technology in Guinea

REPORT AND RECOMMENDATIONS

March 1981

Volunteers in Technical Assistance (VITA)
League for International Food Education (LIFE)

ACKNOWLEDGEMENTS

VITA would like to thank all those who contributed their time and talents toward the development of this report.

In particular, thanks are due to the Minister of Information, Senainon Behanzin and Ibrahima Diallo, Director of the Center for National Productivity, for their help in hosting the team. As usual, Guinean hospitality was extremely warm and generous. VITA would like to thank all of the many people who helped to welcome the team, including Walter Sherwin, AID Affairs Officer in Conakry, and Allen C. Davis, U.S. Ambassador to Guinea.

Members of the AT Exploration Team were:

Russell Barbour, Team Leader, responsible for the Agriculture sector,
Nail Ozerol, Food and Nutrition sector,
Clarence Kooi, Energy sector, and
David Eaton, Water sector.

VITA Volunteers and staff who participated in the Advisory Panel included:

Rama Bah, Sam Baldwin, R. Andrew Blelloch, Alberta Brasfield, William Breslin, Leslie Brownrigg, Ibrahima Diallo, Bruce Edwards, Gary Garriott, Stephen Hirsch, Arnet Jones, Edouard Motte, Andrew Oerke, Irene Petty, Helen Picard, Stig Regli, Norman Ulsaker, Carol Waslien, and Linda Yangas.

Thanks for the work on research and documentation go to VITA Volunteers:

Chris Ahrens, Janet Alarcon, Tom Byrne, Jim Corven, Jack Downey, Patricia Haddad, Tom Hopkins, John Lippert, and Carol Waslien.

VITA Volunteer Yael Zakon-Bourke prepared many of the illustrations in the report.

VITA staff who provided administrative support included:

Cynthia Conti, Bernard Dvoskin, and Mary Galbreath.

VITA Editorial and Production staff who prepared the final report were:

Kristine Stroad Ament, Rama Bah, Tom Byrne, Bonnie Duley, Maria Garth, Marie-Noelle Griest, and Patricia Haddad.

Translation into French was done by VITA's Technical Translator Rama Bah.

Finally, a special acknowledgement goes to the League for International Food Education (LIFE) for their financial as well as technical participation in this effort.

CONTENTS

ACKNOWLEDGEMENTS iii

LIST OF FIGURES ix

LIST OF TABLES xi

I. OVERVIEW 1

II. RECOMMENDATIONS 2

III. AGRICULTURE SECTOR REPORT 13

Sector Overview 13
Background 13
Resources 14

Issues and Institutions 16
Extension 17
Livestock and Range Land Improvement 19
Grain Storage 19
Water Supply and Irrigation 20
Production Inputs 20

AT Inventory 20

Recommendations 21
Research and Extension Program 22
Crop Diversification 25
Unconventional Uses of Cassava 26
Biogas 27
Plants for Essential Oils 30
Grain Storage 30
Livestock and Range Land Improvement 33
Market Garden Programs 34
Training Program in Soil Conservation 34

IV. ENERGY SECTOR REPORT 35

Sector Overview 35
Background 35
Resources 35
Institutions 39

Issues 39
Fuelwood and Deforestation 40
Petroleum Import Costs 40
Energy for Development 41
Reducing Women's (and Children's) Workload 41

AT Inventory 42

Recommendations 47
Hydropower 47
Biogas 50
Fuelwood 51
Other Energy Resources 55

V. WATER SECTOR REPORT 59

Sector Overview 59
Background 59
Resources 59

Issues and Institutions 62
Water Resource Identification 63
Water Resources Planning 69
Water Facility Construction 72
Waste Disposal and Sanitation 79

AT Inventory 82
Water Supply 82
Waste Disposal 87
Irrigation 87
Water Pumping and Storage 89
Solid Waste Disposal 89

Recommendations 89
SNAPE-Related Projects 91
Water Resources Planning Projects 95
Water Projects in the Ditinn Area 96

VI. FOOD AND NUTRITION SECTOR REPORT 103

Sector Overview 103
Background 103
Resources 108

Issues and Institutions 110
Food Loss Reduction 111
Food Waste Recovery 111

Food Preservation 111
Improving the Quality of the Diet 112

AT Inventory 112

Recommendations 112
Fish Farming 112
Solar Food Drying 113
Grain Mills 115
Coconut Grater 115
Improved Oil Extraction 116
High-Nutrition, Low-Cost Food Technologies 118
Bread Flour Mixtures 120
Food Loss Assessment Survey 120

APPENDICES 121

A. Cooperative Agreement 123

B. VITA Model of the AT Transfer/Adaptation/ Diffusion/Acceptance Process 127

C. Guinean Government Institutions Contacted 131

D. Bibliography of Attached Reference Packet 133

LIST OF FIGURES

1. Pelton-Micro Hydro 7
2. CINVA-Ram Block Making 12
3. Manual Rice Dehuller 21
4. Pedal-Type Rice Thresher 23
5. Wheelbarrow-Type Rice Thresher 24
6. Jab Planter (with fertilizer applicator) 24
7. Peanut Sheller 24
8. Sheet Metal Silo 32
9 Mudbrick Silo 33
10. Chinese Biogas Digester 51
11. Lorena Stove 52
12. Smokeless Chula 52
13. Oil-Drum Stove 52
14. Manual Briquette-Making Machine 56
15. Minimum, Average, and Maximum Daily Flow in the Bafing River 61
16. A Map of Geological Formations in Guinea 65
17. Geomorphological Examples in Guinea 66
18. Relation of River Height and Flow 68
19. A Guinean Sanitation Poster 81
20. Guinean Hand-Dug Well 83
21. Evolution of a Traditional Guinean Well 84
22. Reinforced Dug Well 85
23. Hand Pump Designs Being Tested in Guinea 86
24. Typical Springs Development 87
25. Guinean Pit Privy 88
26. Guinean Septic Tank System 88
27. Use of Hydraulic Ram with Spring Irrigation System. 90
28. Solar Water Heater--55-Gallon Drum 94
29. Representation of Ditinn Settlements 99
30. Stationary Solar Grain Dryer 114
31. Portable Solar Grin Dryer 114
32. Coconut Grater 116
33. One Kind of Jack Oil Press 117
34. Another Kind of Jack Oil Press 117
35. Screw Press 118
36. Village Texturizer 119

LIST OF TABLES

1. Composition of Fresh Cassava Leaves 28
2. Summary of Proximate Analysis of Cassave Leaf Meal . 29
3. Number of Readings of Wind Speed in Each Speed Range 36
4. Estimated Monthly Water Flows at Ditinn Waterfall .. 48
5. Estimated Monthly Water Flow and Electric Power Generation 49
6. River Gauge Stations 62
7. Joint Measurement of River Height and Flow 67
8. Criteria for Village Water Supply Need 71
9. SNAPE Program Statistics 74
10. Existing Urban Water Systems in Guinea 75
11. Estimated Monthly Flows of the Tene River 97
12. Indices of Food Production 104
13. Total Grain Production, Consumption, and Net Imports 105
14. Per Capita Caloric Food Supply Data 106
15. Measures of Unmet Average 1976-78 Food Needs in Wheat Equivalent 107

I. OVERVIEW

The People's Revolutionary Republic of Guinea has made a commitment to undertake a major national appropriate technology (AT) program that is likely to have far-reaching international impact. The country offers an exceptional environment for such a program. Contributing factors include: the country's location and position as an innovator among West African countries; its wide-ranging climatic zones; diverse resources; institutional structure; facilities; and, above all, the Government's willingness to accept new ideas and its interest in and commitment to small-scale technology as a development tool.

This report presents the findings of an AT exploration team, sponsored by VITA and by the League for International Food Education (LIFE), which visited Guinea on the Government's request during the month of November 1980. The report outlines VITA's recommendations for a national AT program, including the establishment of a prototype development facility together with training and outreach capabilities.

Guinea's diverse resources and unique set of characteristics offer a chance to test the whole spectrum of small-scale technologies. The country boasts tropical, coastal, savannah, mountainous, valley, and plateau areas. Rainfall, crops, and cultural practices vary considerably from region to region within the country; issues and technological needs vary accordingly. In one of Guinea's four major regions, for example, waste wood is a valuable resource that could be used directly as fuel or to produce methanol, while in other regions fruit wastes from processing industries and from the production of perfume could be the basis for ethanol production, and rich water resources provide great potential for micro-hydro projects.

This wide and unique variety of resources and issues make the country an ideal location for the development of technologies that can be appropriate not only in Guinea, but in countries to the north, east, and south that have climates, resources, and issues similar to those in the four regions of Guinea.

In addition to natural resources, certain Guinean facilities and institutions lend themselves particularly well to the establishment of a structure by which technologies appropriate to each of its diverse regions can be developed and disseminated. The National Agricultural Institute at Foulaya is an

excellent location for an AT research, training, and prototype development center, and the FAPAs (Fermes Agropastorale d'Arrondissement--Agro-pastoral state farms) provide the village level outreach capability vital to the dissemination process. The Ministry of Information has also pledged the cooperation of the news media (radio and television) in helping to disseminate AT information. A detailed discussion of the development or adaptation of these facilities for AT research, training, development, and dissemination in Guinea is given in section II. Recommendations of this report.

The VITA/LIFE AT Exploration Team consisted of one technical specialist in each of four areas: Renewable Energy, Water Supply, Food and Nutrition, and Agriculture. Plans for the Team's visit included surveying institutions throughout the country, in order to determine their involvement or potential for involvement in AT. While a survey instrument had been developed for the exploratory visit, the data collected were insufficient and the results inconclusive, due mainly to the absence of the type of organizations usually found in developing countries. Guinea is an unusually centralized country. Few private institutions exist, nor do they play a major role in development efforts. Further, for a variety of reasons. the team was unable to visit either Upper Guinea or the Forest Region, and thus did not get as broad a view of the country's diversity as would have been ideal.

Recommendations made in this report include those for technologies that can be developed immediately using existing materials, equipment, and skills, as well as technologies that, though promising, require additional study before resources are committed to their development. The team followed VITA's view that recommendations should not be limited by doctrinaire views of what constitutes appropriate technology. However, it was guided by the VITA policy of emphasizing that which can be done by the people themselves using their own skills and resources.

Recommendations are based upon the team's observations and discussions in Guinea, supplemented by the expertise of VITA staff familiar with the country and by VITA and LIFE's extensive experience with AT in other developing countries. In addition, an Advisory Panel of experts reviewed the team's findings and provided valuable comments and perspective. This pooling of knowledge and resources has enabled VITA to draw up sound, practical recommendations, and to determine which technologies have a good chance for successful introduction or adaptation within Guinea.

VITA sees the structure by which technologies are developed and disseminated as important as the technologies themselves.

A VITA model of the AT transfer, adaptation, diffusion, and acceptance process is included as Appendix B to this report. Establishment of a working structure to develop technologies appropriate in Guinea or a part of Guinea is the basis for successful introduction of technologies at the village level country-wide. Once a design and testing facility for adapting technologies to local conditions is functioning, a particular technology can easily be transferred to other regions of the country, providing the technology in question is appropriate there. Training of Guinean personnel at the testing facility is of critical importance. Expatriate experts can be of great value in perfecting and adapting prototypes, but the village extension work necessary to disseminate the technologies throughout the country must be carried out by Guineans in order to ensure sensitivity to cultural and political constraints as well as the practical consideration of cost. The Government of Guinea's express interest in making maximum use of the benefits of AT ensures its commitment to appropriate development efforts which, ultimately, will act to promote economic development and to create employment and income-generating opportunities for its citizens.

II. RECOMMENDATIONS

The following recommendations include conclusions reached by the team after its study and also additional ideas resulting from their consideration by the VITA Advisory Panel on Guinea and VITA's own experience in appropriate technology and in West Africa.

It is not suggested that all of the recommendations should be part of a single program. Some elements would appear to be more appropriately incorporated in projects already being implemented, particularly in agriculture. Others may be beyond the scope of an appropriate technology program and might better be carried out through new projects separately funded and implemented. Still others looked promising to the team but require further, more detailed study before a decision can be made to proceed.

The limited time and the broad scope of the study permitted the identification of several felt needs to which we have tried to respond by defining techniques and technologies under the rubric of "appropriate technology" which we feel have a good possibility of addressing those needs in the Guinean context. In both developed and developing countries there is a growing belief that in the future economic growth must increasingly be based on the use of renewable energies and resources if it is to be sustained. These recommendations reflect that belief.

Finally, the emphasis on any appropriate technology program must, in our judgment, be placed on the development of indigenous resources that include access to technical information appropriate to local skills and needs, the ability to develop and adapt prototypes that meet those needs, and the will to use the existing means for education, training, and demonstration to encourage the widespread use of the technologies.

This chapter begins with a summary of projects, programs, and other recommendations made within each of the four sector reports. More detail can be found in the appropriate sector report.

AGRICULTURE

The Foulaya Research Center is recommended as prototype development and testing center for an appropriate technology

Previous Page Blank

program in agriculture. Personnel from the FAPAs should be systematically trained in the technologies successfully tested at the center.

The FAPA system should be used as the extension service for the dissemination of appropriate technologies, with the responsibility to feed back to Foulaya information on the use of technologies so that they may be further refined and adapted for field use.

Experimentation in growing crops for use in AT demonstration projects should be conducted at Foulaya and in Labe. These might include:

- Production of ethanol from cassava, and the use of plant leaves for animal feed

- Appropriate cropping systems for maximum biogas production

- Growing pyrethrum for use in a program of integrated pest management, and

- Growing plants for extraction of essential oils.

Such experiments should be carefully monitored to determine the cost effectiveness of the use of land and crops for this purpose. The social implications of diverting such produce from human consumption must be a serious consideration and can be justified only where a surplus exists.

Simple agricultural hand tools that alleviate the hard work of farming and reduce the drudgery of that effort should be tested at Foulaya. Many ingenious labor-saving and energy-efficient tools have been developed in other AT programs around the world and should be introduced in Guinea. An extension service manual should be prepared for the FAPAs that includes soil conservation principles to be used in their outreach activities. A periodic training program should be conducted at Foulaya for FAPA personnel in the use of the manual.

Improved and new, low-cost grain storage techniques should be introduced and tested. Up to 80% of a harvest may be lost because of insects, rodents, and weather.

A livestock health and improvement plan incorporating the use of improved breeding stock as well as range and pasture improvements should be developed.

ENERGY

For the Ditinn Valley, recommendations for the development of a 280-kW hydroelectric capacity and a 150-cubic meter biogas production capacity are discussed.

Country-wide, small, decentralized hydropower facilities are suggested, using standard turbines with a reservoir for the dry season, except in the coastal area where less costly small wheels or turbines without reservoirs may be more appropriate.

Biogas production, using animal dung, is recommended for the FAPAs and state farms. Also recommended are ethanol production from fruit wastes, solar water heaters (or solar ponds, where large quantities of water are used), and solar grain dryers.

Finally, a detailed program for the introduction of improved wood burning cook stoves is included.

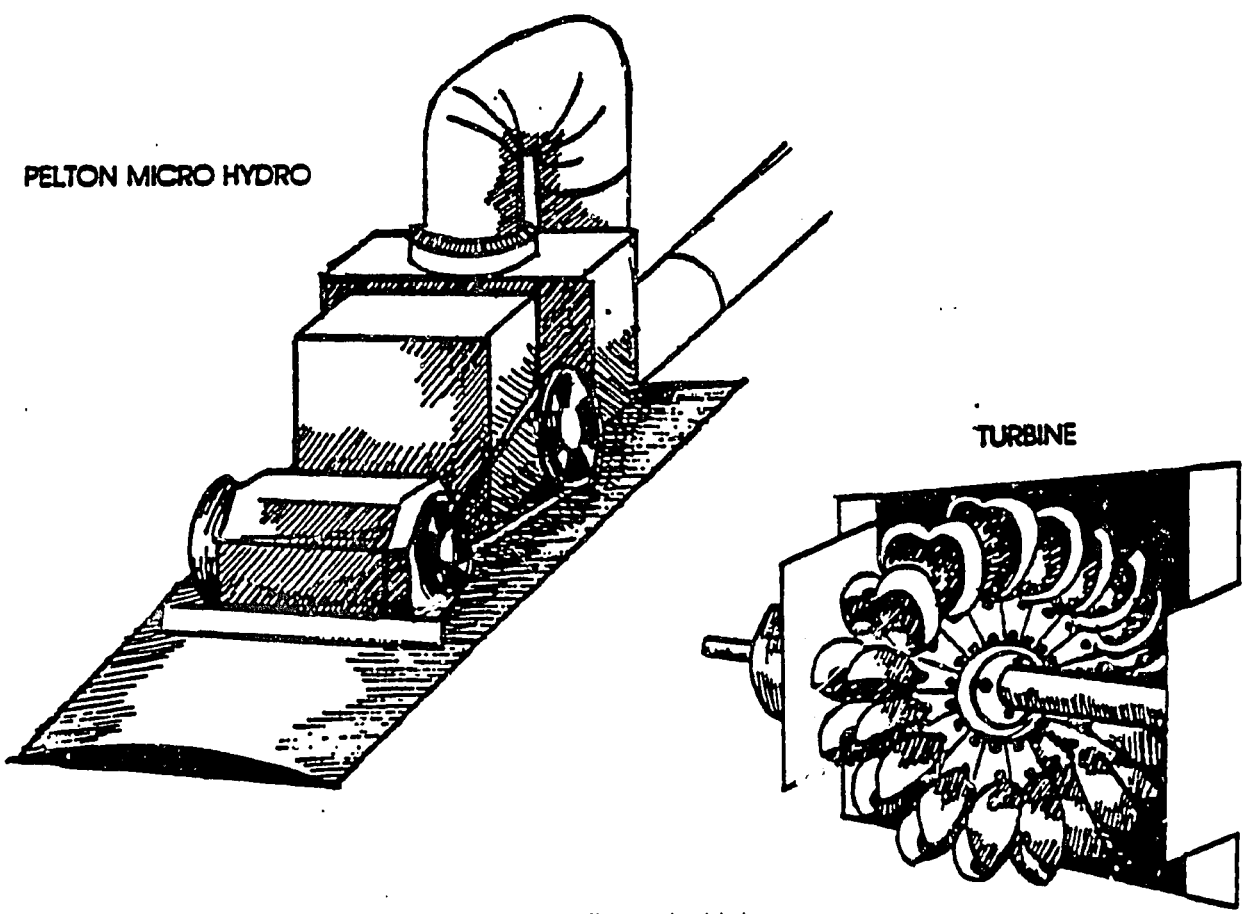

a simple, low-cost hydroelectric generating set which can be manufactured from locally available steel stock

Figure 1. Pelton Micro Hydro

WATER

In the water sector, a proposal for the use of hydraulic rams and simple water storage devices addresses water transmission and storage needs. Solar water heaters are also recommended as part of the project.

A hydropower station and dam at the Ditinn River falls is discussed, including the power generation, water supply, and irrigation aspects of such a project.

Development of French language manuals to aid Guineans in all phases of water resources planning is also recommended.

FOOD AND NUTRITION

To encourage increased protein consumption in the country, various fish production methods are recommended, particularly fresh water fish ponds. Greater use of composite flours are recommended to decrease dependence on imported wheat in favor of local flours such as those from rice, cassava, beans, and other starches.

The introduction of solar food dryers is recommended as an improvement upon traditional sun drying techniques. Simple methods of dry grain milling are proposed as an alternative where traditional methods of grain grinding are in use. These mills can lessen women's workload and also increase the shelf life of the flour. Technologies to produce high nutrition blended foods are discussed. Grain mills, texturizers, and extrusion cookers convert indigenous grains into high nutrition foods for those groups among the population that are vulnerable to malnutrition. Finally, a food loss assessment survey is recommended.

MULTISECTORAL RECOMMENDATIONS

The specific project and program recommendations made in each of the sectoral reports would be all but meaningless without a scheme for their adaptation and introduction to conditions in Guinea. The technologies, once developed or adapted to meet local conditions, have to reach the village level to have any impact.

VITA recommends that an AT research and prototype development facility be established within Guinea as the centerpiece of an integrated appropriate technology introduction master plan. Such a center would offer a testing ground for the introduction of technologies suggested in this report, laboratory

facilities for the carrying out of research for the successful development or adaptation of appropriate systems or technologies, and a facility for hands-on training for Guinean nationals.

By establishing one central research and development facility, human and technical resources are concentrated in one place, and initial external assistance and presence are kept to a minimum. Testing and developing ATs at the center would be carried out with the assistance of technical advisors with expertise in the particular technology. Technical advisors would provide their services at the AT center, including training counterparts. Once trained, these Guineans would act as extension agents for the ATs country-wide.

The National Agricultural Institute, an agricultural research station at Foulaya, is extremely well suited as a site for an AT development center for the following reasons:

- It is well known throughout West Africa and is one of the oldest research centers in the region.
- Its infrastructure, including staff housing facilities, shops, equipment, storage areas, etc., meet the needs of a prototype development center.
- In addition to an interest in small-scale, appropriate technologies, the Institute has experience in testing some of them, for example biogas.
- The surrounding countryside includes a natural transition zone between the lowland areas of the "Basse Cote" and the highland areas of the Fouta Djallon, making comparative studies possible.
- A great variety of crops are grown in the station, as well as in the surrounding countryside.
- The Institute has a stock of traditional tools and technologies as well as modern equipment, used according to the particular situation.
- Eighty to ninety percent of the laborers, all government employees, live in compounds at the station.
- The Institute has a reputation for being the source of new discoveries among farmers in the region, and may easily assume the role of an extension office.
- The Institute has a library, though the French removed much of the literature when they left.

- The Institute is located only 100 miles from Conakry, where headquarters of the national planning and decision-making committee exists.

Nearly all of the projects and programs recommended in the sectoral reports could be tested and adapted at an AT development center, such as:

- Livestock and range land improvement
- Testing of high protein forage crops
- Ethanol production from cassava leaves
- Ethanol production from food wastes
- Biogas digester construction
- Solar water heaters
- Solar grain dryers
- Construction of wood burning cook stoves

Besides the development of specific technologies, ongoing long-term agricultural and other research could take place at Foulaya, building up a pool of information that could facilitate communication and provide the basis for further technological innovation. For example, as described in the energy sector report, data on wind speeds are necessary in order to determine the feasibility of making use of that potentially valuable source of renewable energy. And as the dissemination process gets underway, an informal network between those carrying out research efforts in Guinea will grow up, promoting the sharing of information to the benefit of all. In addition, VITA can help to introduce Guinea to the various worldwide AT information-sharing networks.

The possibility of establishing a formal resource center at the Foulaya station should be kept in mind. VITA could supply such a center with technical documentation and training, or documents could be provided through the already established collection at the Ministry of Informatiion and Ideology in Conakry.

As previously mentioned, effective dissemination of research and ATs developed or adapted to local conditions is of critical importance if the technologies are to have any significant impact at the village level. A key to this outreach process could be the FAPA system. The more than 200 statewide farms are already involved in extension work and can be used as points of departure for technologies or systems tested at the Foulaya station. ATs perfected at Foulaya would be passed onto the FAPAs for incorporation into their work structure. Further dissemination of the technologies will take place through outreach from the FAPAs.

A number of women's organizations offer existing networks that make them ideal conduits for effective dissemination of technologies. The Centres de Promotion Feminines (CPFs--centers for advancement of women in the society), under the Ministry of Health and Social Affairs, are particularly appropriate, as they have been carrying out grassroots work such as promoting market gardens, etc. Other organizations that could play roles in the dissemination process are the Comite National de l'Union Revolutionnaire des Femmes (CN/URFG), the Comites Regionaux des Femmes (CRF), the Comites Feminines des Sections, and the Bureaux Speciaux des Femmes (BSP).

One technology that could be immediately introduced into the FAPA system is that of rammed-earth block construction (Figure 2 illustrates the block-making process). Such CINVA-ram type blocks are made from a mixture of soil and a stabilizer such as cement, lime, or asphalt. The cinva-ram is a simple, portable, low-cost, soil compacting machine that produces blocks and tile that can be used to build both small and large houses and public buildings. The ram consists of a steel press, a hand-operated piston, and a mold box. On a daily average, two persons can make between 300 and 500 blocks.

About 1500 blocks can be made from 45 kilograms of cement. The blocks do not require baking or kiln drying. Other soil presses have been developed by modifying particular aspects of the cinva-ram, such as the tek block press designed in Ghana. Where housing for students and other FAPA staff is in short supply, buildings made with CINVA-ram blocks can offer an inexpensive, appropriate alternative. In addition, grain storage facility designs calling for concrete blocks can use the less expensive, more appropriate rammed-earth blocks.

In areas where a surplus of rice hulls exist, they can be used directly as filler material in the cinva-ram process, or, as mentioned above, burned and pulverized for use as a stabilizer. The production of concrete bricks using rice husks as a stabilizer would be an appropriate small-scale enterprise in Guinea wherever a regular supply of the husks is available.

Most of the recommended projects and programs in this report are suitable for introduction through the FAPAs, once testing is complete--for example, renewable energy technologies such as biogas and ethanol production, as well as livestock and range improvement, water transmission and storage, solar drying and solar water heaters, and grain storage techniques.

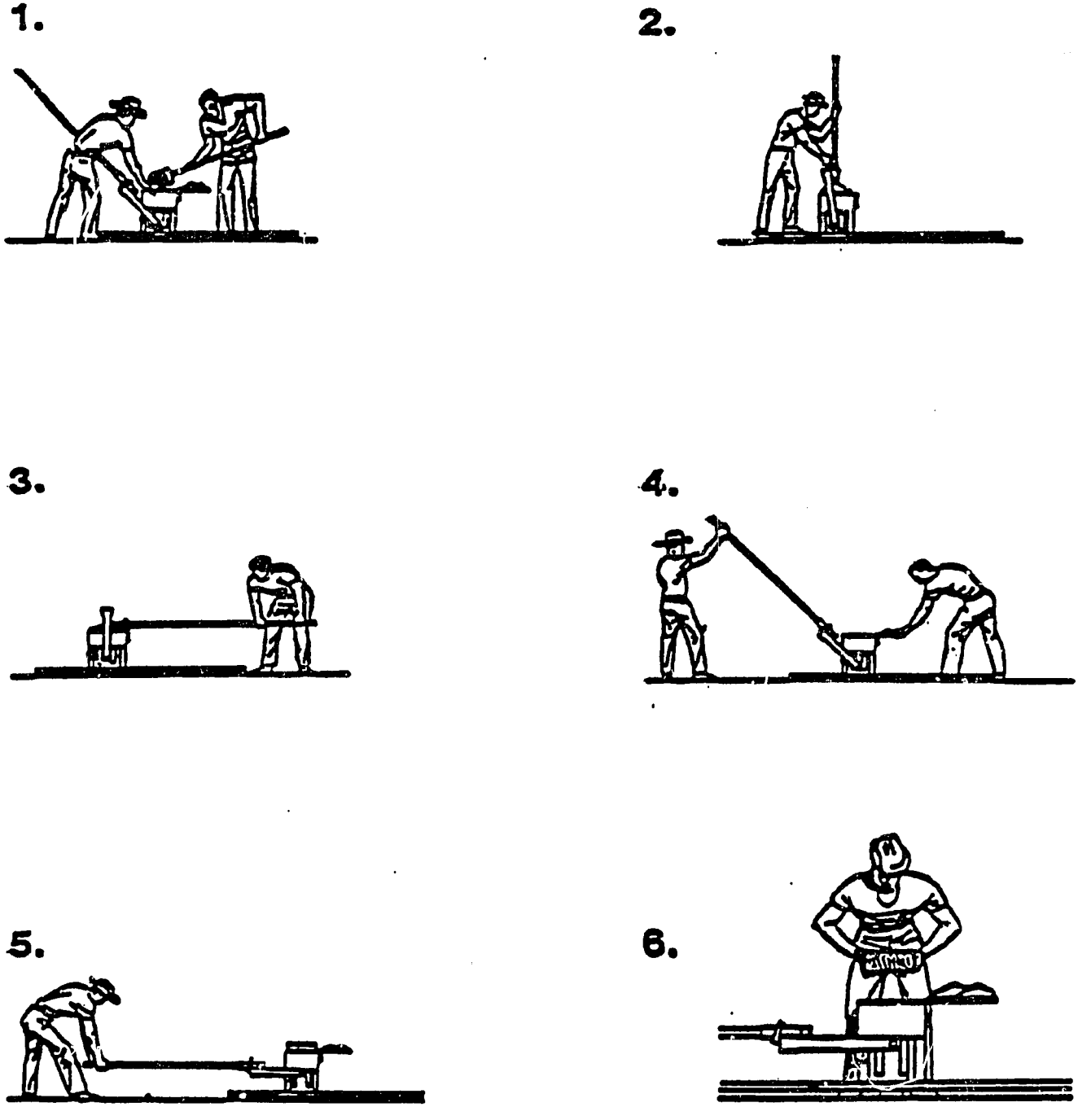

Figure 2. CINVA-Ram Block Making

III. AGRICULTURE SECTOR REPORT

SECTOR OVERVIEW

Background

Agriculture is the highest priority sector in Guinea's economy. The heaviest investment has been made in the collectivized mechanization of agriculture that has often resulted in damage to the soil and water resources without the expected increase in production. Although largely ignored in this investment strategy and continuing to use traditional agriculture practices, the small private farmer accounts for more than 80% of farm production in Guinea. However, the small farmer's methods are also frequently damaging to the environment.

The means for substantially improving the performance of both the collectivized and private farms are readily available and are already being tested and used in West Africa as well as in other parts of the world. These include not only technical improvements for increased production, but also management, organization, maintenance, marketing, and storage methods. Perhaps most critical of all is an effective agricultural extension service.

In many developing countries the effort to achieve greater food production by copying the mechanized agriculture practiced in the United States has ignored the essential role played by the agricultural extension service in American farms. The extension agent trained in the most appropriate equipment, tools, seed, fertilizer, water, and soil conservation methods, works with the individual farmer to apply that knowledge in the field. Equally important is the agent's ability to respond to the needs and problems of the farmer. The resulting exchange of information permits the identification of real problems and guides research, the results of which may then be fed back to the farmers for their use.

An effective national appropriate technology program in agriculture can be built with the existing resources and institutions in Guinea with only minimal external involvement. VITA has identified three necessary elements in an appropriate technology program: an information center that can collect, store, retrieve, and disseminate technical information; a prototype development center that can build, test, and adapt

technologies to local conditions; and an extension service to disseminate the prototypes and other information, and train farmers in the prototypes' use.

Recently Mr. Ibrahima Diallo, Director of the National Center for Productivity, spent three weeks at VITA's headquarters at Mount Rainier Maryland, to receive training in the setting up of a technical information documentation center. The center, located in Conakry, will be the scientific information resource for the country. VITA has sent a large supply of documentation to the center and will continue in a cooperative relationship.

The National Agricultural Institute at Foulaya is a first rate facility for prototype development and adaptation. Traditionally a center for scientific research in agriculture, it has the buildings and the land necessary to house the shop equipment and test prototypes. There are also quarters for personnel who will be trained in the manufacture and use of the prototypes tested so that they may train people within their own institutions who, in turn, will act as extension agents.

The FAPAs (Fermes Agro-pastorales d'Arrondissement) would appear to be the logical choice as the extension service. Personnel from selected FAPAs will participate in the development, adaptation, and at Foulaya the testing of various appropriate prototypes that will be introduced to local farmers through the FAPA. Except where prototypes require greater shop skills, they could be replicated in the FAPA for dissemination in the villages, and perhaps be made in the villages themselves. Information on performance and general experience can be fed back to both Foulaya, for the further refinement of prototypes, and to the National Center for Productivity, to disseminate the information.

The highly developed political structures in Guinea reach into every level of society and the public media such as television, radio, and the newspaper to create a remarkable capacity to disseminate rapidly and clearly both the policies and the educational information necessary to pull such a system together and make it work.

Resources

Guinea can be divided into four natural zones, each of which exhibits a typical climate. These are as follows:

Lower maritime Guinea is a coastal plain. The annual rainfall varies from 2,200 to 4,400mm. There is a six month dry season

(November to May) alternating with a six month rainy season. Temperatures in this region range from an average of 23° to 32°C.

Middle Guinea includes the Fouta Djallon--an upland plateau. Rainfall in this region ranges from 1,500 to 2,300mm annually. The rainy season lasts from mid-May through October and, in general, only December, January, and February are completely dry.

Upper Guinea lies to the east and northeast of Middle Guinea and annual rainfall ranges from 1,200 to 1,700mm. Most of this precipitation falls between June and mid-September. This is a savannah area with altitudes ranging from 200 to 400m.

The forest region has the climate of an equatorial forest. Rainfalls vary from 1,700mm in the north to 3,000mm in the south. The dry season generally lasts two to three months.

In general, Guinea's agricultural potential is good. Rainfall is abundant and there are good soils. There is temperature variation due to elevation. There are, however, certain aspects of the environment that should be noted. First, the growing season is short. In most of the country, the moisture available for rainfed agriculture lasts for about 200 days. Furthermore, as mentioned in the Energy sector report, in some regions light intensities are low. This is due to both cloud cover and haze during the growing season. Low light intensities mean that certain types of crops with high photosynthetic rates will not be utilizing solar energy at their full capacity. Corn and many other tropical grasses exhibit reduced yields when grown in low light intensities.

The soils of Guinea are a particular challenge. Although there is less laterite than one might expect, most soils are heavily weathered and somewhat low in native fertility. Yet the stereotype of the lateritic soil that will quickly turn into a useless bricklike pavement if denuded of vegetation is not valid in Guinea.

Detailed soil maps of the country do not exist, but the AT Exploration Team's visit to the soil testing laboratory in Conakry would lead one to compare many of the soils of Guinea to the Oxisols and Ultisols of the southeastern United States. In general, these soils are low in organic matter and exchangeable bases. The local practice of burning brush to clear land does produce ash that returns some desirable elements to the soil, but burning is destructive and leads to erosion problems. The effect of burning on tropical soils

varies. Sanchez and Buol,[1] found that the effects can depend largely upon the original soil pH. Acid soils such as many of those found in Guinea can be rendered less so by burning, but a soil that is already basic can begin to bind essential iron compounds if ash is added to them. This latter case, of course, lowers nutrients available to plants.

In the drier, semi-arid parts of Guinea, one might even find some sandy Entisols and Inceptisols. These soil types are neither weathered nor oxidized and would probably be considerably more fertile than the soils found in wetter areas.

ISSUES AND INSTITUTIONS

As in any centrally planned economy, agriculture in Guinea is subject to a great deal of institutional supervision. These institutions range from official marketing boards to production brigades. Few, if any, would seem oriented toward technological innovations in agriculture. Whether those institutions can be made more receptive to such innovations will be an important consideration in the successful introduction of new ideas.

The Ministere de l'Agriculture, des Eaux, Forets et FAPAs supervises all of the country's agricultural production and marketing. As noted elsewhere in this report, efforts have centered almost exclusively on collectivization schemes, but have also included extension. Since independence, at least five different plans have been attempted and considerable investment was made in each scheme. A number of state farms, such as the one visited by the AT Exploration Team in Ditinn, are still in existence but no data are available concerning their productivity.

The Ditinn farm is basically a livestock operation using open range land and corn silage to maintain a mixed herd of dairy cows and breeding stock. The farm has done considerable genetic research, crossing the local N'Dama livestock race with several races of the Soviet Union and France. Research in improved resistance to the tsetse fly has also been conducted there. One hundred fifty hectares of the state farm's domain is planted in corn. Most of the valley is open range land with a sparse cover of local grasses. Carrying capacity is low--

---

[1]Sanchez, P.A. and Buol, S.W. "Soil of the Tropics and the World Food Crisis" in Food: Politics, Economics, Nutrition and Research, edited by P.H. Abelson, American Society for the Advancement of Science, 1975.

about one hectare per animal unit. There is a dairy lab and a small ruminant (sheeps and goats) operation, along with a pork program. A heavy emphasis on imported protein concentrates was noted.

Emphasis in the team's discussions with agriculture officials centered exclusively on the newly created FAPAs. Unlike previous efforts to engage the peasantry in communal farming the FAPAs are staffed with graduates from the country's numerous agricultural schools and colleges. Although they vary considerably in size, we were told that a typical FAPA occupies approximately forty hectares. This is less land area than originally planned for any given FAPA. A typical FAPA staff consists of about 30 employees, among whom is found a supervising agricultural engineer, two to five administrative supervisors, one or two livestock technicians, about five interns, and several manual laborers.

Extension

As mentioned earlier, effective extension activities, and the network by which they are disseminated, are critical to the development of the agricultural sector. In Guinea, the network does exist, and is based on institutions that are known and respected at the village level. However, several elements of the extension service need to be strengthened or developed.

Personnel training is a priority, and a prerequisite not only for the planning or management of any new programs, but for the upkeep of existing ones. Further development of agricultural management courses at the National Agricultural Institute at Foulaya is one possibility, as is training of individuals at institutions such as the International Institute of Tropical Agriculture (IITA) in Nigeria, and the International Rice Research Institute (IRRI) in the Philippines, in order to upgrade traditional agricultural practices.

Research capabilities should emphasize small farm production and responsiveness to needs as defined by the small farmer.

Production inputs such as tools and improved seed are necessary. A rural credit scheme aimed at small farm production could help make these essential production inputs available.

Soil conservation is an extremely important consideration in an agricultural extension program; a systematic approach to erosion control and fertility maintenance needs to be undertaken at a national level. The marginally fertile soil types suggest good possibility for incorporation of foliar feeding of many crops. Using nonfood sea products such as kelp and

certain fish wastes would reduce dependence upon expensive chemical fertilizers and with minimal capital investment. The FAPAs and the FACs are important links in the dissemination of much of the information and activities outlined above.

Government inputs to the FAPAs include loans to buy tractors, fertilizer, and seed. However, none of the FAPAs that were visited by the team had fertilizer available in sufficient amounts and there seemed to be little use of improved seed. Tractors were being used for transportation. The government had intended that FAPAs would become self-sufficient in three years given these inputs. At that time, the government would no longer have to subsidize the FAPA workers' salaries. In addition to production goals, FAPAs are to become points of introduction for improved rural technology. The government hopes that innovations at the FAPAs will prove so impressive that local farmers will voluntarily group themselves around the FAPAs to start larger collectivization efforts.

Most of the FAPAs are less than 18 months old and have not yet met these goals. The team's visit to several FAPAs and discussions with other FAPA leaders would suggest that this system is not on a firm agronomic base. This calls into question the training that young FAPA workers have received. For example, one of the older "miracle" rice types was being used without the benefit of fertilizer applications, making the yield lower than local types.

In general FAPA farming methods seem to be the same as those of local farms. When asked how FAPA methods differ from local practices, and how new technology was being used, most FAPA leaders said that there was no difference between FAPA and subsistence operations. It is not surprising that, given the lack of external input or appropriate equipment, FAPAs would revert to traditional farming methods. Much of the difficulty experienced by the FAPAs can be explained by their newness; however, there does seem to be a lack of training and motivation among the young FAPA workers.

It would seem that an opportunity exists to use the FAPAs effectively as the extension service in the national appropriate technology program. If the FAPAs can introduce low-cost technologies that are both energy- and labor-saving, and that actually increase production, they would almost certainly attract the interest and attention of local farmers. Ultimately, FAPAs would have a better chance of achieving their own goals than now seems likely.

The National Agricultural Institute, which was unfortunately not included in the team's itinerary, has been suggested (see

section II. Recommendations) as the prototype development center under a national AT program. Historically the Institute was one of the world's leading centers for research on genetic amelioration of banana (Musa sapientum and musa sinensis), pineapple (Ananas comosus), mango (Manguifera sp.), and various citrus plants up to 1958 when the French left, taking with them most of the relevant documentation. The team did not see any publications from the station. The Agricultural Development Bank in Conakry was at one time active in making loans to the rural sector, but these activities ceased due to the exhaustion of available funds.

The Women's Centers (Centres de Promotion Feminines--CPF) have been active in promoting market gardening, along with other activities such as sewing and meal preparation. A visit to these market gardens was not included in the team's itinerary.

A meeting was arranged with the Comite National des Femmes Revolutionnaires de Guinee, which runs the CPFs. Team members asked the seemingly well organized leadership about the types of crops being emphasized in their programs. They were told that tomatoes and onions were a priority because they could be part of the Government's plans to initiate the preservation and marketing of these foods. Secondly, the women's groups are attempting to improve production of peanuts and palm oil, although it was not clear how this was to be done. The CPF leaders also mentioned crop diversification, and expressed interest in food preservation projects such as banana drying. The AT Exploration Team invited project suggestions for small market gardens and food preservation--issues that merit further attention.

Livestock and Range Land Improvement

Livestock and range land management programs are needed in Guinea. These could be undertaken in conjunction with a general program of livestock improvement that would select from among already adapted local animals. Study of past and current research and activities in Guinea in this area would need to be made in order to avoid unnecessary duplication of effort. A range land improvement program would be an integral part of any livestock improvement program. Investigation of improved forage crops would also be an important aspect.

Grain Storage

Improved postharvest technology and management is called for as the country experiences unnecessary losses. This is typical

of developing countries and much information and experience is available to reduce the loss.

Water Supply and Irrigation

Need was expressed in some locations in the area of water supply and irrigation. See the Energy sector report recommendations, which discusses minihydro projects that will meet some of these needs, and the Water sector report recommendations on the use of hydraulic rams in water transmission and storage.

Production Inputs

Tools, pest management systems, natural fertilizers, and improved seed are currently not available to the Guinean farmer. A rural credit scheme aimed at small farm production could help make these essential production inputs available.

Specific recommendations in response to some of these issues may be found in the Recommendations section of this sectoral report.

AT INVENTORY

The AT Exploration Team was unable to visit traditional farms in Guinea, and did not directly observe many AT activities. Most of the rural technology observed could be described as the technology of necessity. The team did not see organizations focusing on developing and designing small-scale rural technologies for Guinea's agricultural sector.

Economic considerations aside, there are three basic approaches to improving agricultural productivity. One is to grow more by improving production methods, using better genetic stock, or taking effective measures against insects and diseases. The second is to improve harvesting methods so that all of what is grown is efficiently collected. Thirdly, storage losses can be reduced. In many of these areas the Guinean farmer could benefit from simple, known, and easily implemented technical advances.

Rice, for example, is threshed by hand in some circumstances by pounding it against the earth. Grain is cracked with pestle and mortar. The team did see a handmade rice dehuller outside Conakry. The device is manufactured privately at a cost one-third less than imported models. The dehuller (see Figure 3) is available in both manual and electric models, and can process up to 450kg in a 12-hour day.

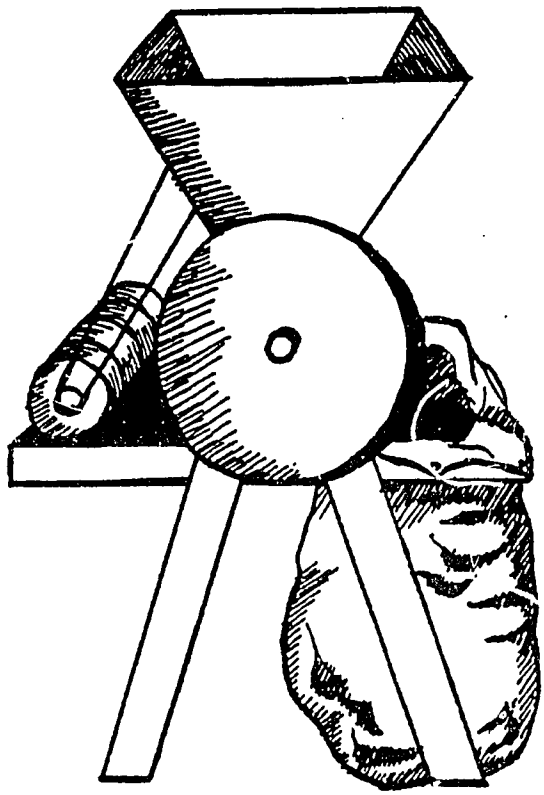

Figure 3. Manual Rice Dehuller

Some elements of grain storage were explained to the team by guides; there seemed to be a good deal of attention paid to protecting grain from insects. In the Fouta Djallon area the team was told that smoke from fires inside traditional huts could be used to keep insects away by storing the grain on shelves at the top of the ceiling. On the island of Kassa, near Conakry, what appeared to be clay containers were being used for grain storage.

In summary, very little in the way of new technology is currently being designed, adapted, or introduced to Guinean conditions. Current practices exist because of necessity and while frequently ingenious, may not represent the most effective solutions to the problems. The potential benefit that could be derived from the introduction, adaptation, and dissemination of known small-scale rural technologies in the agriculture sector appears to be high.

RECOMMENDATIONS

A national appropriate technology program should make maximum use of existing facilities and institutions and be based upon

locally available skills and materials. Demonstration AT projects are initiated because the technology apparently responds to an identified need. However, inadequate attention is often given to the means of sustaining and disseminating a technology if the demonstration is successful. For example, a successful demonstration project to produce biogas cannot be economically replicated if excessive time and effort are required to collect scattered materials for the digestor.

It is recommended that before a decision is made to proceed with any technology it should be determined if the necessary materials and skills are available for replication if the demonstration is successful. This will often mean that crops should be grown to be used for specific purposes such as cassava for the production of ethanol; pyrethrum for use in a program of integrated pest management; cropping systems for maximizing biogas production; and plants for the extraction of essential oils. It should be possible in planning such projects to find areas of mutual interest to the state farm/FAPA system and the local farmers and encourage their cooperation in the pursuit of all possibilities.

Research and Extension Program

Many experts believe that programs in extension education are an efficient method of introducing appropriate technology to farmers. A well managed research program coupled with the ability of an extension service to disseminate the information derived from this research often make for increased productivity.

A discussion of the proposed use of the National Agricultural Institute Foulaya as a center for research, adaptation, and development of ATs for dissemination in the rest of the country is included above, as well as in section II. Recommendations, of this report. Also discussed there are the ways in which research or ATs developed at Foulaya, along with education programs, could be disseminated.

In addition to research dealing with cropping systems, experiments involving small-scale machinery should also be carried out. Specifically, the use of hand planters, hand cultivators, sprayers, harvesters, etc., should be examined. Some possible implements that may be appropriate for adaptation and introduction are found in Figures 4 through 7.

An extension service manual should be prepared for the FAPAs, discussing soil conservation principles, among other things. A periodic training program should be conducted for FAPA personnel in the use of the manual.

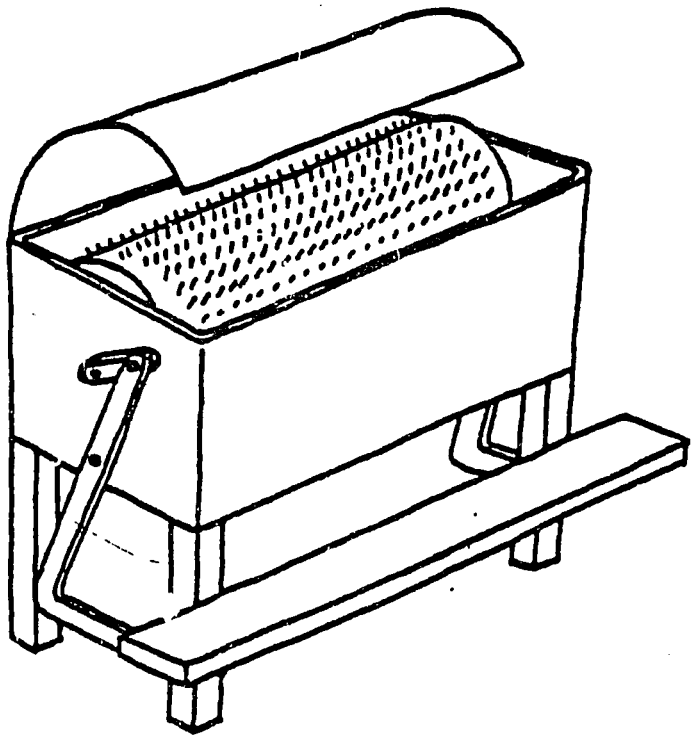

Figure 4. Pedal-type Rice Thresher

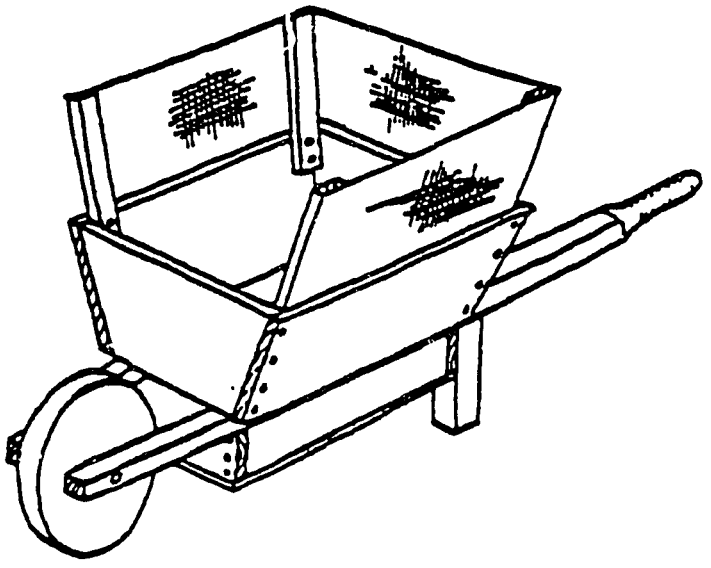

Figure 5. Wheelbarrow-type Rice Thresher

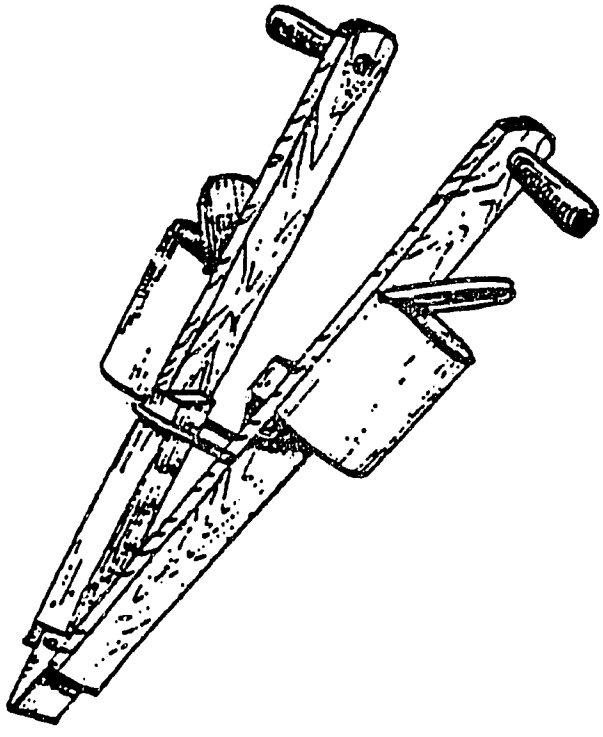

Figure 6. Jab Planter (with fertilizer applicator)

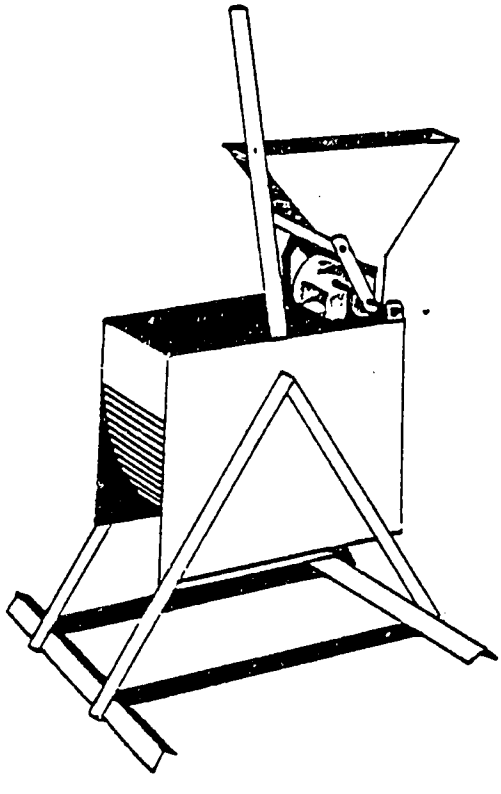

Figure 7. Peanut Sheller

Implementation of an extension system could serve Guinea's food producers in many other areas, namely, range management and livestock improvement, market garden research, soil conservation techniques, and genetic research.

Finally, it is recommended that the research programs suggested should be performed within the context of the small farm. Previous work done at IRRI and IITA indicates that on-farm testing greatly facilitates dissemination of new technologies.

Crop Diversification

A program of crop diversification should consist of a series of well designed experiments concerned with identifying new and underutilized crop species that could aid Guinea's agricultural production. Increasing the production of peanuts is one area that could be addressed in new research.

An excellent protein source, peanuts are grown with considerable success in much of West Africa, including Guinea. Peanuts also contain high quality oil that could be used domestically or exported.

Soybeans, like peanuts, are a good source of protein that is frequently used for livestock. This crop could aid Guinea in its desire to cut down on the amount of imported protein concentrate required for livestock production. Additionally, the soybean contains a large percentage of high quality oil that has a myriad of uses.

Both peanuts and soybeans are members of the legume family. This plant family, in the presence of certain bacteria, has the ability to fix atmospheric nitrogen and is therefore not dependent on the application of expensive nitrogenous fertilizers. Those two crops, then, seem to be the logical object of future research. If increasing production of these species is determined to be feasible, much could be accomplished in terms of Guinea's interest to become more self-sufficient in food production. Products could also be exported and aid in Guinea's balance of payments.

Pyrethrum, a member of the chrysanthemum family, is grown throughout the tropics. The flowers of this plant are dried and used as a natural insecticide. Pyrethrum may also be used to fumigate stored grain.

Insects pose a threat to crops both in storage and in the field, and Guinea is no exception to this rule. It is therefore recommended that the possibility of growing pyrethrum for

use in a program of integrated pest management be explored. A program of this type, if successful, could also have the secondary benefit of reducing Guinea's reliance on expensive imported synthetic insecticides.

The recognition that forestry products represent potential livestock forage, soil conditioners, fuel, and diverse food crops as well as lumber should encourage consideration of vigorous efforts in agroforestry. Intercropping methods with trees offer exciting long-term results along with immediate results in soil conservation and environmental improvements.

Unconventional Uses of Cassava

While cassava can be regarded as an important food source in some parts of the country, it appears to be plentiful nearly everywhere, and its nonfood potential uses are worth some consideration. If these uses are considered to have merit, it will be necessary to increase current levels of production of the crop so that there will be no competition between food and nonfood needs.

Ethanol production is one important nonfood use for cassava. Cassava is a very efficient converter of solar energy into carbohydrate. Early work done by Banzon[2] showed that the cassava plant has considerable potential for the production of ethanol. Alcohol production from cassava is the same as in other starch-bearing plants and consists of two basic steps. First, the starch is broken down into glucose. The glucose is then converted into ethanol expressed by the equation ($C_6H_{12}O_6 \longrightarrow 2C_2H_5OH+2CO_2$). Fermentation is carried out by microorganisms. The amount of ethanol produced is therefore a factor of the starch content of the plant material and the efficiency of the microorganisms.

A testing program that could examine the feasibility of ethanol production from cassava should be considered. Since cassava is a widely grown plant, quantities required for experimental alcohol production would probably be available, though additional production may be in order where demand as a food source is high.

This particular project could fit well into the state farm and FAPA mechanism. If experimental results indicate that ethanol production from cassava is economically feasible, the project

---

[2]Banzon, J.R., "Fermentative Utilization of Cassava," 1941.

could then be tried on a larger scale through the already existing FAPAs and state farms countrywide.

The leaves of the cassava plant can also be used in another potentially important way for Guinea: as livestock feed. The use of imported protein concentrates for animal feed is apparently a common practice on the state farms and FAPAs in Guinea. The manager of the state farm at Ditinn told the AT Exploration Team that the high cost of these protein concentrates is a limiting factor in the farm's livestock improvement program. Additionally, the farm manager said that, if possible, he would be interested in producing protein concentrate on the farm and would like to make it available to local farmers.

As opposed to introducing high protein crops (e.g., soybeans) that are not commonly grown on a large scale in Guinea, we recommend that the use of cassava leaves be investigated as a source of animal feed. Again, potential for competition with human food use must be considered, and production increased where necessary. Hendershott et al.[3] found that cassava leaf meal has a feed value comparable to alfalfa meal. Cassava leaves are rich in protein. Some cultivars may contain as much as 20 to 35% crude protein on a dry weight basis. Of this crude protein, 75% is true protein and has a high feeding value. As shown in Table 1, cassava leaves contain a number of substances that are essential to animal nutrition. Table 2 shows the value of the leaves as processed meal. From the appropriate technology viewpoint, unconventional uses of cassava such as ethanol production and the use of leaves for livestock feed should be given more consideration. Cassava's adaptation to Guinea's climatic conditions make it an excellent candidate for new research in these two areas. However, the potential uses of cassava outlined in the previous pages must not compete with cassava use for direct human consumption.

Biogas

As noted elsewhere in this report, the potential for biogas production in Guinea is great. Manure is one of the most frequently used sources of methane gas, but plant materials may also be used to generate this important source of renewable energy. Research done with cropping systems for the production

---

[3]Hendershott, C.H.; Ayres, J.C.; Brannen, S.J.; Dempsey, A.H.; Lehman, P.S.; Obioha, F.C.; Rogers, D.J.; Seely, R.W.; and Tan, K.H. "A Literature Review and Research Recommendations on Cassava," 1972. U.S. AID Contract No. csd/2497.

Item	Unit	A	B	C	D	E
Food energy	calories	44	62	56	—	—
Water	gms	85	80.5	74	—	—
Carbohydrates	gms		9.6	5	—	—
Protein	gms	4	6.8	7.5	—	—
Fat	gms	0.4	1.3	0.7	—	—
Calcium	mgs	210	206	100	206	—
Iron	mgs	3	2.0	3.0	3.5	—
Vitamin A	I.U.	13,000[a]	10,000[b]	9,000	—	—
Thiamine, B_1	mgs	1.5	0.16	0.30	0.15	0.27
Riboflavin, B_2	mgs	0.25	0.30	0.43	0.30	0.42
Niacin	mgs	0.85	1.8	1.5	2.0	3.53
Vitamin C	mgs	100	265	60[c]	311	320

Sources as follows:

A. Data from B.S. Platt, Tables of Representative Values of Foods Commonly Used in Tropical Countries (Gr. Brit., Medical Research Council, Spec. Rep. Ser., 253, 1945), pp. 20-21.

B. Data from FAO, Food Composition Tables - Minerals and Vitamins for International Use (Mar. 1954), pp. 35, 48.

C. Data from G.M. Culwick, A Dietary Survey Among the Zande of the Southwestern Sudan (Sudan, Min. Agr., 1950), p. 141.

D. Data from R.S. Harris and Hazel E. Munsell, "Edible Plants of Central America," J. of Home Economics, Oct. 1950, p. 630.

E. Data from F.A. de Moura Campos, "O Complexo da mandioca como traco da influência amerindia na alimentacão brasileira," O Hospital (Rio de Janeiro), June 1951.

[a]As carotene.

[b]Young green leaves; shoots, green color not yet developed, about 110 I.U.

[c]As eaten.

Source: W.O. Jones 1954 Manioc in Africa, Stanford University Press, Stanford, California

Table 1. Composition of Fresh Cassava Leaves (per 100 grams edible portion)

	Jamaican Samples (Nos. 312-321)				Brazilian Samples (Nos. 322-331)			
	Frozen (Fresh)		Dried[1]		Frozen (Fresh)		Dried[1]	
	Range	Average	Range	Average	Range	Average	Range	Average
Moisture (%)	76.72-80.50	79.2			67.01- 74.82	71.2		
Protein (N X 6.25) (%)	3.73- 6.54	5.4	18.52 32.42	25.8	5.37- 10.74	7.8	17.80- 34.82	27.3
Ether Extract[2] (%)	.77- 2.67	1.6	3.95 12.78	7.6	1.91- 4.18	3.0	6.64- 15.24	10.5
Ash (%)	1.47- 2.23	1.8	7.46 11.07	8.8	1.40- 2.01	1.6	4.65- 6.83	5.7
Crude Fiber (%)	1.34- 1.92	1.7	6.41- 9.43	7.9	1.11- 1.78	1.4	3.98- 6.79	4.8
Carbohydrates[3] (%)	8.17-13.77	10.4	40.51- 59.15	50.1	12.28- 19.76	14.9	40.96- 63.74	51.9
Calories (per 100g)	70.04-86.70	77.4	347.80-404.00	372.5	101.50-134.40	118.0	387.20-438.10	411.0
Cyanide (ppm, wet)	33.00-73.00	46.0			42.00- 80.00	56.5		

[1]Dry values calculated from analyses of fresh frozen material.
[2]Considered as fat for the calculation of calorie values.
[3]Calculated by difference.

Source: D.J. Rogers and M. Milner, 1963. Amino Acid profile of Manioc Leaf Protein in Relation to Nutritive Value, Economic Botany 17(3):211-216.

Table 2. Composition of Fresh Cassava Leaves (per 100 grams edible portion)

of food and forage emphasize harvest of plant parts and storage organs for direct human or animal consumption. With regard to biogas production, attention must be paid to the total amount of plant material grown, i.e., the biomass. Crookston et al. have experimented with cropping systems designed for maximizing biomass production.[4] These systems may include single cropping, multiple cropping, and intercropping.

In accordance with the recommendations made in the energy sector report, appropriate cropping systems for maximizing renewable energy should be developed. Experiments dealing with this theme must be designed in a statistically sound manner and receive input from individuals trained in the field of agronomy and renewable energy.

Plants for Essential Oils

Another area that might be of interest for small-scale interventions is the growing of plants for extraction of essential oils. In Labe, the team visited the SIPAR (Societe Industrielle des Plantes Aromatiques) factory. There they learned that farmers who were able to bring in certain quantities of plant essences were free from additional marketing quotas for other commodities such as grain. Currently, SIPAR does very little extension work. Management, however, said that it would be interested in offering soil testing and fertilizer to the peasants who supply the factory with essential oils in that only small amounts of fertilizer would be required for the few orange and jasmine plants that each peasant owned.

A program for insect and disease management should be considered. Again, this case of a state organization expressing interest in the village level farmer creates a good setting for the introduction of appropriate technologies.

Grain Storage

Adequate storage of agricultural products is essential in order to assure protection and availability of food throughout the year and of seed for the following year. The only grain storage area made available to the AT survey team for inspection was the rice storage building at the FAPA in Saliguidia.

---

[4]Crookston, R.K.; Fox, C.A.; Hill D.S.; and Moss, D.N. "Agronomic Cropping for Maximum Biomass Production," Agronomy Journal, 1978, 70:899-903.

The grain storage facility could be improved so as to better protect the grain from rodents, insects, birds, and small domestic animals. Unfortunately, the team was unable to observe traditional grain storage practices in use by individual farmers.

Certain generalizations can be made with regard to grain storage practices. Every storage container, no matter what it looks like or what it is made of, should keep grain cool and dry, and protect grain from insects and rodents.

All storage methods try to protect grain, but to do so effectively requires the following good storage practices:

- Drying grain well (to 12-13% moisture content) before putting it into storage.
- Putting clean grain only into containers that have had all old grain, dust, straw, and insects removed.
- Keeping the grain cool and protected from large changes in outside temperatures. This can be done in a number of ways--by using building materials that do not easily pass on changes in outside temperatures to the stored grain, by keeping or building storage containers away from direct sunlight, or by painting the containers white.
- Protecting the grain from insects by following rules for cleanliness and drying, by applying insecticide and/or by putting the grain into airtight storage.
- Waterproofing the buildings and containers as much as possible. This is done both by the way the building is constructed and by applying materials that keep water from soaking into the building material. Storage buildings should be built on well-drained locations. They should not be placed where they will be flooded by ground water runoff during heavy rains.
- Checking the grain regularly while it is in storage to make sure it is not infested, and following recleaning instructions to destroy insects, if they are found when the grain is checked.

Some of the existing traditional practices in Guinea may already represent the best possible, or most appropriate grain storage methods, given the resources and information at hand. And in some cases, traditional technologies are the bases upon which improvements are made, as in mud-reinforced sisal baskets.

Placing baskets on platforms or raising them off the ground, where that practice is not now followed, should be encouraged, in part through example at the FAPAs, where appropriate.

For grain with moisture content of less than 12-13%, airtight storage is the best way to store grain. Storing grain in airtight containers cuts off the oxygen supply to insect life in the grain, effectively protecting the grain from insect damage. Airtight storage may already be practiced in some parts of the country; where it is, improvements to make containers more airtight can be made.

Sorghum, maize, and millet are among the grains that can be stored successfully in metal drums. A 200-liter drum holds about 660 kilograms of grain. Drums are airtight and provide protection from rodents and other animals and are readily available throughout the country.

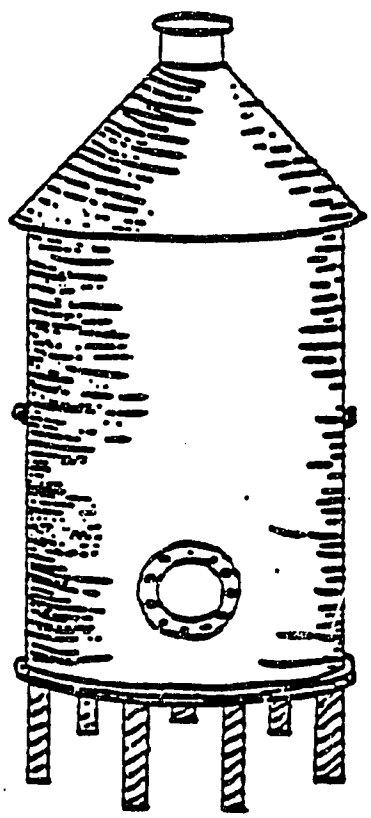

Figure 8. Sheet Metal Silo

The Institute of Tropical Agriculture Research in Benin developed a sheet metal silo (see Figure 8) that could be easily built where welding equipment is available and disseminated at the FAPA level.

Where airtight storage doesn't exist, or is too expensive, a mud brick silo, while not airtight, offers a suitable alternative at a lower initial capital investment. One design was prepared in Ghana (see Figure 9). The mud bricks are plastered with a mixture of cement, lime, and sand, or with mud, and the walls are painted. Various plastering and painting methods could be tested on prototypes at the AT development facility.

Grain storage pits can be improved, where necessary (i.e., where losses to insects or mold have been heavy), by replacing wood or mud covers with covers of metal or plastic, by building shelters over the pit to use for protection in rain, and by improving pit linings.

Ferrocement can be an important building material for grain storage uses. It is made from wire mesh, sand, water, and cement. Rice hulls and coir dust can be used to substitute for part of the cement required (see section II. Recommendations). Airtight grain bins can be made from the material, and pits (existing or new) can be lined with it inexpensively.

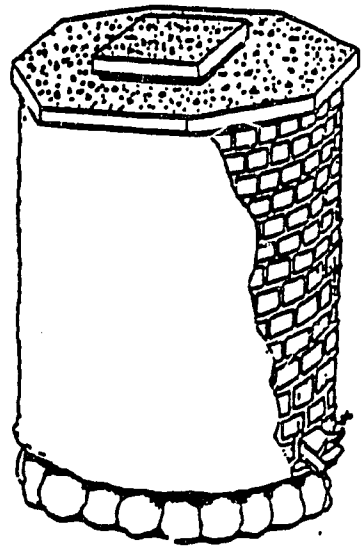

Figure 9. Mud Brick Silo

Livestock and Range Land Improvement

In the Ditinn Valley, where both a state farm and a FAPA are located along with traditional farmers, a livestock improvement plan coupled with range improvement would be promising initiatives. Livestock improvements should concentrate on upgrading indigenous breeds with appropriate lines to provide characteristics advantageous for local conditions. Of particular concern should be disease resistance, feed requirements, and reproducibility. Development of a comprehensive animal health program to promote sanitation measures, basic veterinary skills, and general vaccination of all livestock including poultry should be included. And management and organizational aspects of both livestock and range land improvement need to be highlighted.

Livestock health and improvement is an area in which some effort is currently being made in extension activities. Typically there is one "zootechnicien" at each FAPA who goes out into the village to vaccinate cattle and give technical advice on the treatment of various diseases.

At the state farm at Ditinn, controlled breeding centers were set up to improve genetically local cattle herds. This latter program was not successful due to the higher nutritional requirements of the hybrids, which could not survive on the vegetation found on the local range lands. Nevertheless, the idea of using improved breeding stock, coupled with pasture and range land improvements is a sound one. It could help the local farmers and assist the state operations in an area in which they have already shown interest.

In conjunction with this same program, a project dealing with the suitability of tropical legume species may help in the area of high protein forages. Experiments designed to choose specific forage species for livestock consumption could reduce Guinea's dependence on imported protein concentrates. Additionally, the use of grasses and grass-legume mixtures and silage production for livestock consumption should be explored.

Forage crop cultivation is an important tool in soil conservation. It is therefore possible that a forage improvement project could be implemented in conjunction with a soil conservation program. Complementary programs to introduce utilization of nonlegumous nitrogen fixing plants such as Azolla with rice varieties offer special promise, as does general soil inoculation to increase production while reducing chemical fertilizer consumption.

Finally, veterinary kits should be designed for distribution to each FAPA, if not already done.

Market Garden Programs

Market garden programs to encourage the production of vegetables and other crops for local sale are a method of improving village income. Most of the products from market gardens are free from marketing controls, and they help to diversify local diets. The FAPAs could be used, as in a recent African Development Bank project, for seed multiplication and the production of genetically superior seeds.

Training Program in Soil Conservation

The more general agronomic practices of soil conservation could be part of a training program for married rural couples similar to the programs found in Cameroon where basic agricultural techniques are taught to those already committed to living in rural areas. The importance of soil erosion has been neglected by both the traditional farmer who practices slash and burn agriculture and by the state entities that are attempting to introduce heavy mechanized farm implements destructive to the country's fragile lateritic soils.

IV. ENERGY SECTOR REPORT

SECTOR OVERVIEW

Background

Guinea is rich in energy resources, yet energy use is low. Most Guineans use only human energy and fuelwood, and petroleum imports cost over US$70 million per year. Development of technologies to use the indigenous energy resources is in order. This would result in economic development proceeding more rapidly, human workloads being lightened, and scarce foreign exchange being saved.

Small-scale energy technologies can play an important role. Energy resources are widely distributed, making small-scale energy production more attractive in most cases than large-scale production that requires extensive distribution systems. Small-scale energy technologies can be built incrementally to satisfy the demand as it develops. Large-scale installations, such as the proposed Konkoure river hydropower installations, would initially produce more power than could be consumed. One can conclude that both from a distribution and timing viewpoint small-scale energy production may be preferable.

Resources

A thorough evaluation of the magnitude and qualities of an energy resource requires an extensive, intensive effort. The following evaluation of many energy resources is based only on a brief investigation and data may be approximate and incomplete. However, a reasonably good picture of the situation emerges and some definite statements can be made.

- Wind: Wind speed and direction measurements are routinely made and transmitted to Conakry at eleven stations of the "Direction Generale de la Meteorologie" in Guinea. The measurements are made at a height of 10 meters but no indication of surface roughness or nearby obstructions was obtained.

  Wind speeds are low. Examples are shown in Table 3 for three regions of Guinea. The winds in all three regions are

Month/Hour	Speed range (m/sec) 0 - 1	2 - 4	5 - 6	7 -14	15-21	--21
Jan. 0600	31	0	0	0	0	0
1200	9	17	2	3	0	0
1800	28	3	0	0	0	0
July 0600	28	3	0	0	0	0
1200	10	18	3	0	0	0
1800	23	5	1	1	1	0

Labe, 1978, Central mountain region

April 0600	27	3	0	0	0	0
1200	11	17	2	0	0	0
1800	13	17	0	0	0	0
Nov. 0600	29	1	0	0	0	0
1200	10	20	0	0	0	0
1800	25	5	0	0	0	0

Conakry, 1978, Coastal region

June 0600	17	12	0	1	0	0
1200	4	23	3	0	0	0
1800	3	19	7	1	0	0
Sept. 0600	15	13	2	0	0	0
1200	3	19	8	0	0	0
1800	2	20	1	1	1	6 (?)

Table 3. Number of Readings of Wind Speed in Each Speed Range

strongest in the middle of the afternoon and very weak at night. Examination of records for other stations and other months did not reveal large deviations from the data of Table 3.

Since only wind speeds above about 4m/s produce appreciable power, one can see immediately that the wind energy resource in Guinea is very small. Isolated regions of higher winds may, of course, exist but are not evident from the available measurements.

- Solar (insolation): Although all energies except fission, fusion (terrestrial), geothermal, and tidal are of solar origin and could be included in "Solar," we will limit this category to the solar power incident upon one square meter of horizontal earth surface.

  There are twelve meteorological stations that record sunshine duration by means of Campbell-Stokes sunshine duration apparatuses, and four stations have been equipped with pyranometers to measure the total insolation. One can deduce from the Campbell-Stokes sunshine duration data, rainfall data, and cloud cover data that the insolation resource is considerably less than that of neighboring Senegal and Mali, countries in which insolation measurement data are available. However, complete information was not available.

- Fuelwood: Although there are thickly forested regions along the coast and in the southeast of the country, it is generally believed that most of the country suffers from a fuelwood shortage. High prices for fuelwood are presumably an indicator of short supplies. For more information on the fuelwood resources, see the Issues section.

- Biogas: The primary resource needed for production of biogas (methane and carbon dioxide) is animal dung. Human excrement and vegetable matter are also used, as in China. Large quantities of animal dung are produced in Guinea as is evident from the large number of cattle in Guinea. However, it is usually scattered over wide areas, mixed with dirt, and much of it is old. Collectibility, freedom from dirt and stones, and freshness are all desirable qualities for biogas production. These conditions exist, for example, at the State Farm at Ditinn. Presumably, good sources of dung for biogas production also exist at some FAPAs. A quantitative evaluation of the biogas resource at Ditinn is given in the Recommendations section of this sector report.

- Ethanol: Ethanol for fuel use can be produced from agricultural wastes or from crops grown specifically for ethanol

production. The wastes must be high in starch or sugar. Good supplies of wastes exist. Orange, mango, and pineapple wastes were identified. For example, an estimated 400,000 liters of ethanol can be produced per year at one site from orange wastes.

For larger-scale ethanol production, crops such as sugar cane, cassava, pineapple, or sorghum must be grown specifically for this use. The question of competition with food production arises, particularly since food must be imported for some regions of the country, such as the Fouta Djallon. It is, of course, possible to replace nonfood and export crops by ethanol-producing crops without affecting the food supply. See the Agriculture sector report recommendations for a discussion of the use of cassava for ethanol production.

It should also be noted that the residue, after production of ethanol, contains the original protein of the feedstock. Ethanol production consumes only the starch and sugar. Residues can be used for fertilizer.

- Methanol: Methanol for fuel uses can be produced from carbonaceous materials such as forest products and forestry wastes. Parts of Guinea are forested and forest wastes exist. However, this avenue was not pursued by the team because of limited time and because fuelwood is not plentiful in all areas.

- Agricultural and forestry wastes for combustion: A wide variety of materials such as coconut shells, sawdust, rice hulls, and straw can be used as fuel; this is done in some parts of Lower Guinea already. Briquetting or other processes such as conversion to charcoal may be desirable in order to increase the utilization of waste materials. See the Recommendations section for further detail.

- Geothermal: Geothermal resources are said to exist. This resource is usually not amenable to small-scale use and the team did not evaluate it.

- Tidal and wave energies: These appear to be small for Guinea and were not evaluated.

- Ocean thermal energy: This is not amenable to small-scale use.

- Animal power: The indigenous cattle, the N'Dama, which are tse tse fly resistant, are small and may not be good draft animals. The team did not evaluate this resource.

Institutions

A number of institutions have functions relating to appropriate technologies in the energy sector. These are listed below with a statement of their functions relating to AT in energy. This is the AT Exploration Team's opinion based on meetings with organization personnel and may not be the officially assigned responsibility. For some further information, see the appendix on institutions.

"Institut National de la Recherche et de la Documentation de la Guinee (INRDG)" coordinates the energy work of certain other government agencies.

"Centre National de Productivite (CNP)," has a "Division de la Technologie et du Developpement" that is interested in introducing and promoting small-scale technologies, including those in the energy sector.

"Ministere de l'Agriculture, des Eaux et Forets et FAPAs" is responsible for forests but not for water power, dams, or other aspects of water relating to irrigation, energy, or water supply.

"Ministere d'Energie" is responsible for energy and includes a new "Division of Renewable Energy." The Division of Renewable Energy has constructed a few biogas digesters as its first effort in renewable energy and hopes to obtain funding to begin work in other technologies.

"Service National de l'Hydraulique" plans the utilization of the country's rivers. A major study of the rivers of Central Guinea has been carried out and studies of other regions in Guinea are planned. It is just beginning a hydropower study.

"Bureau d'Etudes, Ministere d'Agriculture" approves projects connected with the FAPAs (Fermes Agro-Pastorales d'Arrondissements).

"Direction Nationale de la Meteorologie" runs the national meteorological station network that measures weather phenomena and conditions and is beginning to make quantitative measurement of insolation.

ISSUES

Major issues related to energy were identified from conversations with Guineans and analysis of information and data obtained in Guinea and elsewhere. There are four energy issues that seem to predominate:

- Fuelwood and deforestation
- Petroleum import cost
- Energy for development
- Reducing women's (and children's) workload

Fuelwood and Deforestation

Between 1960 and 1977, 30% of the Guinean forest cover was destroyed.[1] The principal cause was slash-and-burn agriculture. Brush-firing to increase grazing quality and fuelwood harvesting are other major contributors to deforestation.

Fuelwood prices lie in the range US75¢ to 5¢ per kilogram.[2] Charcoal prices in Conakry are about US6¢/kg. Such costs can consume an estimated 20% of a family's income in Conakry.[3] In rural areas, where fuelwood is collected rather than purchased, considerable labor is expended in supplying a family.

Techniques to alleviate these heavy financial and labor burdens, and to arrest deforestation, are in order. These would take the form of improved cooking stoves that use less fuel than traditional cooking methods, improved charcoal making methods that produce higher charcoal yields, and tree planting that reduces the destruction rate of the natural forest.

Petroleum Import Costs

One of the most brutal shocks to the economies of the nonpetroleum-producing developing countries is the bill for oil imports. It drains off a large portion, perhaps the predominant portion, of foreign exchange so critical to developmental needs.

Guinea's current oil import bill is more than US$70 million per year. A measure of its magnitude is determined by comparison to the value of its major export, bauxite and alumina.

---

[1] FAO Report, 1978.

[2] Information from two sources in Conakry and one source in Pita.

[3] A fonctionnaire (bas niveau) receives a salary of 3000 Sylis/month. A family in Conakry may spend 20 to 50 Sylis per day on fuelwood. Assuming 20 Sylis/day, one finds that this government employee spends 20% of his income on fuelwood.

These exports run, after debt service, at about US$200 million per year. Thus, oil imports negate 35% of the foreign exchange derived from Guinea's predominant export product. If, as seems likely, oil prices will continue to rise faster than aluminum prices, petroleum imports will soon cancel out aluminum-based exports and, in fact, could eventually exceed the foreign exchange derived from aluminum-based exports.

Therefore it is prudent to search for ways to reduce petroleum consumption and to replace petroleum-derived energy by other forms of energy. Guinea is particularly well endowed with competitors to petroleum, namely, hydropower, biomass, and direct solar energies.

Energy for Development

It is not enough to reduce the negative effects of the oil import bill. Additional energy must be made available for development, particularly in rural areas, in order to increase rural productivity, lighten the human labor load (particularly that of women--see below), and increase the standard of living. Examples of such energy needs are energy for water pumping for human, animal, and plant needs, grain grinding, lighting, and agricultural needs such as energy for tilling, harvesting, transportation, and drying. Resources such as biomass (ethanol production) and direct solar (for drying) are abundant and applicable to these needs.

Reducing Women's (and Children's) Workload

Women and children bear the brunt of the most onerous tasks involving expenditure of energy--in this case, of human energy. Water drawing and transportation, fuelwood collection and transportation, and grain grinding are among the most energy-intensive tasks. They are assigned almost exclusively to women (and children).

It could be a mistake to alleviate these loads with petroleum-derived energy since it continues to become more expensive, since petroleum products are difficult to transport to remote rural areas, and since the conversion machines (diesel and gasoline engines) require spare parts, maintenance, and repair, which had been found from experience to be difficult to supply. Suitable alternate and renewable energies exist--small hydropower, biomass-derived energy such as biogas, and direct solar energies such as photovoltaics. Guinea is well endowed in these areas.

AT INVENTORY

Almost all appropriate technology apparatus and devices consume energy and could, therefore, be included under the "energy" heading.

Examples from current AT use in Guinea are:

- "Mortier et pilon" (mortar and pestle) for grain grinding and decortication utilizing human energy
- Cooking fire using wood energy
- Bucket for drawing water using human energy
- Pedal sewing machine using human energy
- Grain drying by placing it on a flat surface in the sun using insolation
- Blacksmithing using charcoal and human energy

Appropriate technologies that are generally considered to be specifically "energy" technologies that were seen or heard about by the team are:

- Biogas digesters: several have been built or are planned; there is a high degree of interest in this technology.
- Solar dryer: one model was seen at the university but was not in use.
- Windmills: a model of a Savonius wind machine was seen at the university, and two standard water pumping machines were to be installed in the northeast of the country.
- Solar distiller: one model was seen at the university but was not in use.
- Solar water heater: one model was seen at the university but was not in use.
- Small hydro: this technology has been much studied and a few installations are in place. (Among these are three Chinese projects, Kinkon at 3.2 MW, Dabola at 1.5 MW, and Macenta planned at 3.0 MW; a 180-kW plant at Labe was

decommissioned in 1976; the Guinea Area Handbook[4] also lists a 160-kW plant at Macenta and a 640-kW plant at Seredou.)

In none of the above-listed ATs was evidence seen of significant changes in technology imposed by specific Guinean conditions.

Different energy resources exist in different regions of Guinea. Consequently, specific energy technologies are appropriate in the different regions. A brief list of the most promising technologies must therefore specify the appropriate region.

Although almost all renewable energy technologies can be employed in Guinea, only the most promising are listed and described here.

- Small decentralized hydro: This will be defined to be any size below 1-MW. Because of the alternate dry and wet seasons, all-year sites that do not require water storage (dams) are hard to find. Run-of-the-river types require a fairly large flow in the dry season. The most appropriate type in all regions except the coastal region is a standard turbine with a reservoir to supply water during the dry season. In the much smaller coastal region there may be sites that do not require water storage since the dry season may be much less pronounced. There, sites using water wheels with no storage, and therefore costing less, may be found.

  Development and adaptation of small water wheels or turbines without reservoirs or with small reservoirs is recommended for the coastal region, and standard turbine and reservoir technology is recommended for the other regions. Thorough site studies must be made before undertaking any project.

- Biogas: Because the state is committed to centralized farming and livestock development, biogas production can be most appropriately carried out at centers such as FAPAs and State Farms. Here animal dung can be easily collected in a fresh state, uncontaminated with dirt and stones. Additionally, skilled people who can properly operate and maintain the digesters are in good supply at these institutions. A

---

[4]Nelson, H.D. et al. "Area Handbook for Guinea," 1975, U.S. Government Printing Office.

further consequence of this line of thought is the conclusion that small units may be less appropriate than larger, more technically sophisticated units.

- Ethanol production: Good prospects for ethanol production from waste fruit exist. A large quantity of mangoes rots or is eaten by monkeys. Pineapple wastes exist, for example, at the pineapple cannery near Forecariah. Normally 20% of the pineapple is rejected as unsuitable for canning.

  Orange wastes exist at the Centre Nationale d'Agriculture at Labe, where perfume is made from oranges. Only the oils from the orange skin are used and the rest of the orange is rejected. Approximately 12,000 tons are rejected annually. This is enough to produce about 400,000 liters of ethanol.

  Resources such as these or combinations of such resources make ethanol production for fuel use attractive. The very short supply and high price of gasoline and diesel fuel in inland locations is a further incentive to local fuel alcohol production. The first installations can be devoted to supplying medicinal ethanol that would command a much higher price (but the market would be quickly saturated). The units could be of any appropriate size and could be adapted from American farm-sized designs.

  Energy farming, that is, dedication of an entire crop--sugar cane, cassava, pineapples, sorghum, etc.--to ethanol production would undoubtedly require larger ethanol production plants. If demand for liquid fuels increases and petroleum prices continue to rise, this may be an appropriate endeavor, though food demands will obviously have to be considered.

  As a beginning, we recommend that a detailed study be made of ethanol production from fruit wastes and that small-scale production be instituted. This will allow development of experience necessary for more extensive ethanol production as agricultural production, liquid fuel demand, and imported petroleum prices all increase.

- Solar water: Hot water is heated for domestic purposes and, in towns, by electric heaters. This is extremely expensive. Standard solar water heaters are more than competitive with electric heaters. Metal drums painted black can provide hot water for domestic uses simply (see Figure 26 in the Water sector report). For water heating in large quantities such as for industrial process heat (canneries, etc.) or for hospitals, solar ponds would be more economical.

- Solar drying: Different crops require different drying processes. In the United States maize must not be dried at too high a temperature because of cracking. However, in Guinea cracked maize is a product sold in the markets. Fish require drying at temperatures of 50 to 60 degrees centigrade in order to inhibit insect growth in the fish. Grain will reabsorb moisture, especially in the humid season, and steps must be taken to prevent this or to redry the grain. The standard type of solar drier that consists of a solar air heater and a drying cabinet can be designed to produce the air flows and temperatures appropriate for each product.

  A great deal of grain drying is done and need for drying of other crops such as "patates," a type of sweet potato grown and exported at Dounet, exists. Drying is difficult, especially during the wet season. Solar dryers appear to be appropriate.

  Development and testing of solar dryers of moderate size (perhaps 20 square meters of collection area) is recommended for drying of both grain and "patates."

- Photovoltaic power: Insolation is not as high as in drier climates and other resources (biomass, hydro) are abundant. However, in the north and east of Guinea photovoltaics may have only diesel power as competition. In that case, there may be applications such as general electric supply, water pumping, or grain milling that would be appropriate. Nearby Mali has a successful photovoltaic program.

  No development should be undertaken at present but the situation should be monitored so that photovoltaics can be introduced when solar cell prices fall and petroleum prices rise sufficiently to make photovoltaic energy cheaper (and more reliable) than diesel energy.

- Geothermal: The resource is not quantitatively known. Developments should be postponed until the quantitative characteristics of the resource can be determined.

- Solar distillation: This is only feasible if potable water has a value in excess of two to five dollars per cubic meter. The team did not identify such needs and consequently recommends no action on this technology.

- Solar concentrating systems: There is a great deal of diffuse insolation, not collected by a concentrator, in Guinea. Concentrating power systems are not yet well developed in the United States. No action is recommended.

Following a market study, standard solar water heater construction and installation could be undertaken, and a search for large-scale hot water demands, with a view to satisfying those demands with salt gradient solar ponds, could be made.

A salt gradient solar pond is essentially a flat plate solar heat collector which includes heat storage. It is a pond, about 2 meters deep, which contains salt water; the salinity increases with depth. The deeper water is heated by insolation penetrating to the bottom. This warm water, which would normally rise to the surface, remains near the bottom because of its high density--a result of being more saline. Salt gradient solar ponds are in operation with 100°C temperature near the bottom.

This heat can be extracted by means of internal or external heat exchangers and used for a variety of purposes. Among these are heating of domestic water, driving absorption cooling or refrigeration equipment, and generating electricity. Because of its large heat storage capacity, operation on cloudy days and at night is possible.

Solar ponds cost about US$50 per square meter compared to $250 per square meter for conventional flat plate collectors. They can be constructed with local materials (except for the plastic liner) and by local labor. No high technology input is needed. Salt at a reasonable price must be available. A reasonable price may be US$30 to $40 per ton.

Salt gradient solar ponds are particularly attractive for developing countries, where salt prices are not too high, because of their low cost, heat storage capability, possibilities for construction locally with a minimum of imported materials, and excellent possibilities for local operation and maintenance.

- Solar cookers: Biogas and improved woodstoves appear to be a more appropriate solution to the cooking energy problem. No action is recommended on solar cookers.

- Improved wood-fueled cooking stoves: Deforestation is a major problem in Guinea. Use of wood for cooking is a major contributor to the problem. Furthermore, the money and labor expended on fuelwood are major burdens. More efficient use of fuelwood is in order.

  Improved wood-burning cookstoves show 25 to 50% lower wood use in Upper Volta. A program of improved stove construction and introduction is recommended in Guinea (see Recommendations section).

RECOMMENDATIONS

The Ditinn Valley boasts substantial energy resources. Recommendations for the development of hydropower, biogas, fuelwood and other resources there are outlined below. At present, energy is available in Ditinn from diesel generators and from firewood. The diesel plant consists of three 75-kVA generators. Present electricity consumption is also unknown but can be assumed to be typical of villages in this region, that is, 5 to 7 kg/day per family.[5] These energies can be replaced, supplemented, or used more efficiently. Suggested techniques for doing this are described below.

Hydropower

Six kilometers south of Ditinn the river flows over a waterfall. The total fall is approximately 200 meters. The flow has been estimated, but not measured, to be 0.5 to 1.0 m^3/sec during the wet season.[6] According to local observers the flow never stops but is considerably reduced during the dry season.

In order to arrive at a more precise estimate of the flow of the Ditinn waterfall it will be compared here to the known flow of the Tinkisso River at Dabola. These rivers are in neighboring watersheds both facing east. The mean rainfalls on the two watersheds and the areas of the two watersheds are:

Tinkisso at Dabola:	1700 mm precipitation,	1155 km^2 watershed
Ditinn waterfall:	2050 mm precipitation,	30 km^2 watershed

Reference[7] also gives the average monthly flows of the Tinkisso at Dabola for a three year period. By multiplying the flows by the appropriate rainfall and area ratios we arrive at estimated monthly flows at the Ditinn waterfall. These are shown in Table 4. The third column in the table shows the power of the falling water, assuming a 200-meter fall. Actual

---

[5]Personal communication with people in Pita. The wood is sold to people in Pita by bundles of about 10-15 kg weight. A family is said to consume one bundle (fagot) every two days.

[6]Motor-Columbus Ingenieurs-Conseils, S.A., Mission Microcentrales, September 1975, Baden, Suisse. (Obtained from the Service National de l'Hydraulique.)

[7]Motor-Columbus Ingenieurs-Conseils, S.A., Annuaire Hydrologique, 1971, Baden, Suisse. (Obtained from Service National de l'Hydraulique.)

Month	Flow (m^3/s)	Water Power (kW)
January	0.21	414
February	0.12	242
March	0.06	118
April	0.03	56
May	0.02	44
June	0.11	223
July	0.39	767
August	1.43	2,800
September	1.94	3,790
October	1.99	3,890
November	1.02	2,000
December	0.36	700

Table 4. Estimated monthly water flows at Ditinn Waterfall and water power available, assuming no storage of water.

electricity production will be considerably less than this when account is taken of the conversion efficiences, optimum installed capacity, and the minimum flow that a turbine will tolerate.

Reference to the water flow rates given in Table 4 suggests that a storage dam on the plateau above the falls would be desirable. We do not know whether a suitable site exists. If it does, and if it could be large enough to allow a complete levelling of the flow, one would obtain a levelized annual flow rate of 0.64 m^3/sec. At a conversion efficiency of 80 percent, one would be able to obtain a power output of 1 megawatt. If one chose not to build a storage reservoir and to install capacity for only the minimum flow one would obtain a constant electric power of 35-kW.

The needs lie between these extremes. The Service National de l'Hydraulique, Conakry, assumes total needs to be 80 watts capacity per person. For the population of 3500 people this would require 280-kW installed capacity. This capacity is assumed to satisfy domestic, public, artisanal, and irrigation needs.

Calculation based on Table 4 shows that it will be necessary to store 1.4 million cubic meters of water above the falls in

order to provide 280-kW throughout the dry season. If this were done the flow rate and power would be as shown in Table 5. The flows followed by an asterisk are reduced by an unknown amount (but never below 0.18 m^3/s) due to evaporation and percolation losses from the reservoir and withdrawal of water in the dry season. It will, of course, be necessary to construct reservoir capacity two or three times larger than 1.4 cubic meters in order to compensate for evaporation and percolation.

Month	Flow (m^3/s)	Electric Power (kW)
January	0.21*	280
February	0.18	280
March	0.18	280
April	0.18	280
May	0.18	280
June	0.18	280
July	0.39*	280
August	1.43*	280
September	1.94*	280
October	1.99*	280
November	1.02*	280
December	0.36*	280

Table 5. Estimated monthly water flow and electric power generation with a storage reservoir.

If a dam is not feasible for any of the above reasons, the dry season minimum in hydroelectric power could be supplemented by diesel-electric power, for example, from the three 75-kVA generators presently installed.

Smaller hydro installations can cost on the order of US$2000 per installed kilowatt. If an additional US$1000 per installed kilowatt is added for reservoir construction, the total cost would be US$840,000. Actual costs, of course, can only be estimated from a detailed engineering design.

A high tension line from the Pita area is currently being built. This appears to be a less viable option than a local hydroelectric installation. The cost of the high tension line

is not known but must be at least US$30,000 per kilometer or close to US$1 million for the approximately 30 kilometers of length. It would probably cost more than the local hydro installation that is proposed here. Furthermore, energy from the source of power, the dam at Kinkon, is already oversubscribed during the dry season. Additional dry season capacity is needed in the region and should be built near the user.

Biogas

The planned animal population of the State Farm is 500 animals. We will assume that each animal produces 5 liters of collectable fresh dung per day. This can be converted to 300 liters of biogas per animal, having a heat content of 5000 calories per liter. Thus, there will be available on the State Farm an amount of biogas that can produce 750,000 kilocalories of heat per day. This is high temperature heat suitable for cooking, running an engine, or for artisanal use.

The sludge remaining contains essentially the same fertilizing elements as the original dung. It is ready for use by plants. Most pathogens have been destroyed so it is relatively safe for use on vegetables or other food crops that are not cooked.

The biogas produced from the dung of the animals would be approximately sufficient to do the cooking for 3500 residents. It is sufficient to supply 214 kcal/person/day (750,000 kcal/day/3,500 persons). Assuming that the present cooking use is one-half of a kilogram of wood per person per day and that cooking with gas is about four times more efficient than cooking with wood, this quantity is just sufficient to do all of the cooking for the residents. Lighting and other energy uses would be supplied by the hydroelectric (and/or diesel) installations.

The total digestion volume is about 400 cubic meters. This could be in the form of one large digester located at the animal enclosures, with gas piped to users, or smaller digesters could be located at convenient locations. In the latter case the animal dung would have to be transported to these locations.

Assuming that digester costs are about US$300 per cubic meter, the cost of such an installation would be about US$120,000. It would be worthwhile to investigate inexpensive construction techniques such as for the Chinese biogas digesters (see Figure 10).

Before embarking on such construction a thorough social and economic study of wood use, cooking habits, and wood

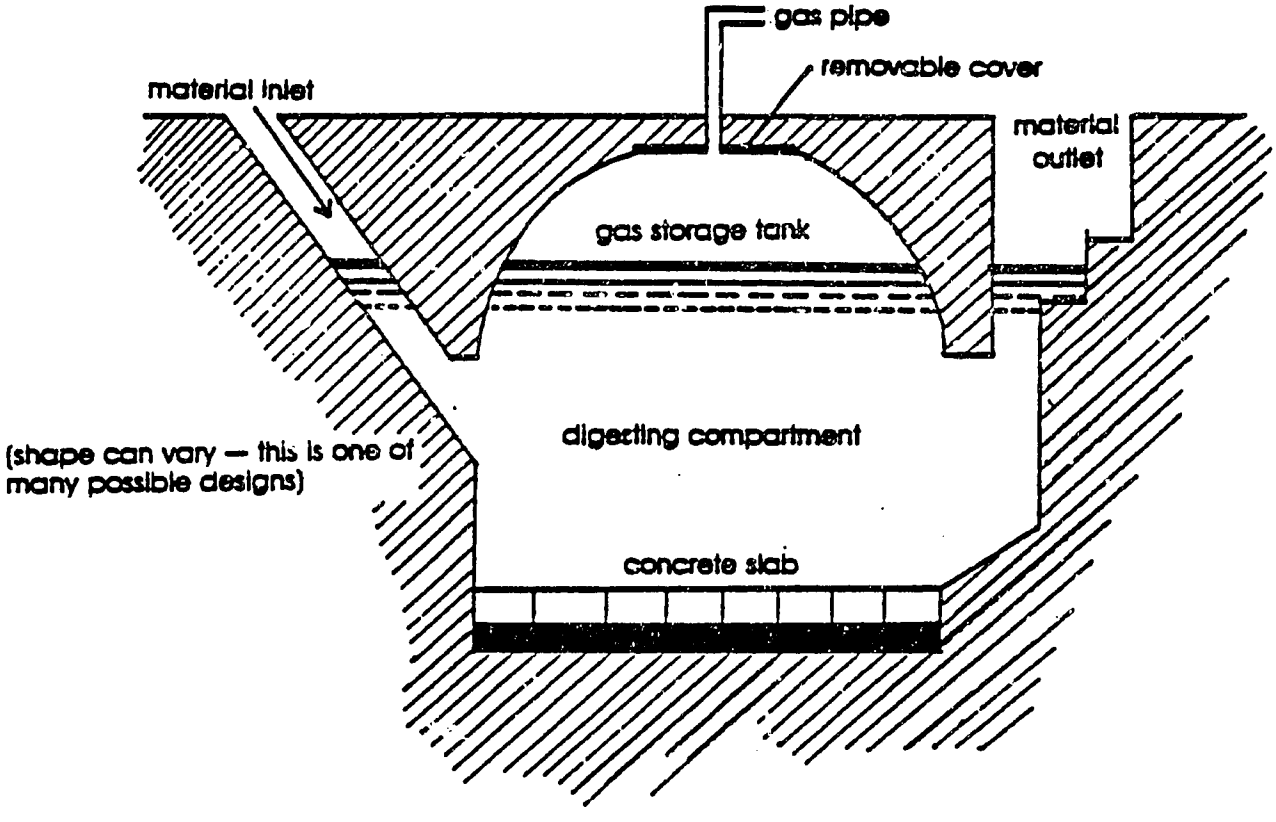

Figure 10. Chinese Biogas Digester

availability in Ditinn would be necessary (see the section on Fuelwood, below).

Fuelwood

Quantitative information pertaining specifically to the Ditinn Valley was not obtained. However, it was determined that deforestation is a general problem in the Fouta Djallon and that the costs and labor relating to fuelwood are considered to be onerous. The valley is not heavily wooded, leading one to guess that fuelwood is not plentiful.

Action designed to alleviate the assumed deforestation and fuelwood collection problems appears to be needed. The biogas program would be appropriate. If it were not carried out, or if it were but was not able to reach all of the people, a

program introducing improved wood stoves would be appropriate. Tree planting programs are already part of the national effort.

A wide variety of appropriate, locally-constructed cook stoves has been designed (see Figures 11, 12, and 13). These could be introduced in a well-planned program.

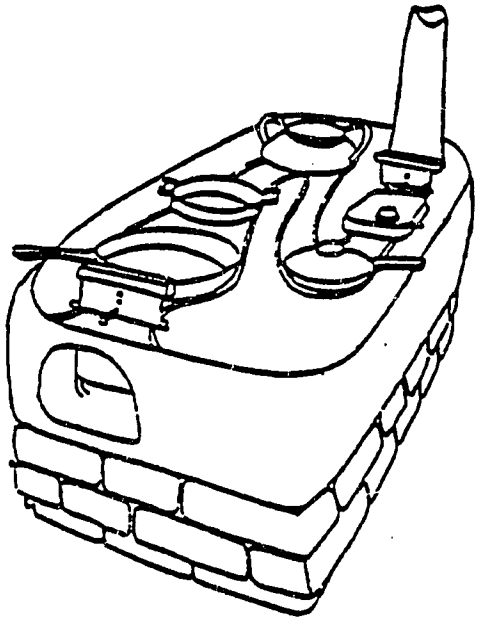

Figure 11. Lorena Stove

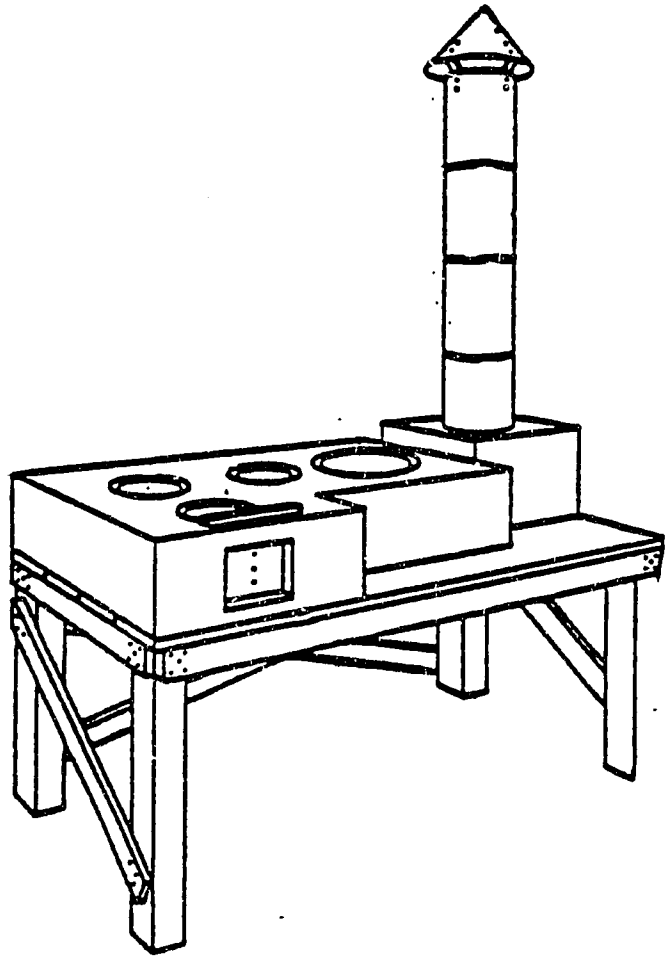

Figure 12. Smokeless Chula

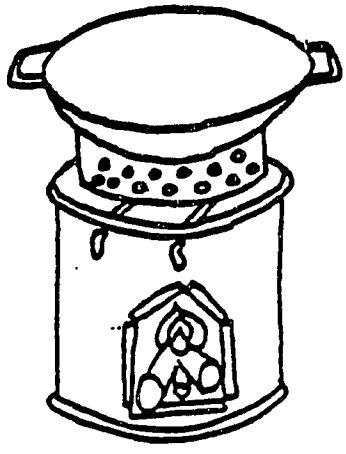

Figure 13. Oil Drum Stove

VITA designed such a program for Guinea. It consists of a four-phase action plan to be implemented in each of the six major cities in Guinea (Conakry, Kindia, Mamou, Labe, Kankan and N'Zerekore). Since the four regions of Guinea differ greatly in climate, geography, ethnic groups and cooking practices/needs, phase one, to be carried out in each city, will be a socioeconomic needs analysis performed by the Centre National de Productivite (CNP).

The socioeconomic study will provide answers to the following questions:

- What sources of fuel do most women use for cooking? If wood, what kinds do they use?
- Which foods are usually served? How are they prepared? How many times per day do women cook?
- How much wood is used per day for a family of 5, 10, or 25 persons?
- How is the wood transported from the market to the homes of the users?
- From where do women obtain firewood? How much do they pay for it?
- Is wood equally available all year round?
- Does wood serve for other purposes besides cooking?
- With which utensils do women cook?
- Do women prefer to cook standing or sitting? Outside or inside their homes?

The second phase is the development of prototype stoves and their undergoing examination and testing based on experience developed in the Sahel program. An AT center as proposed in section II Recommendations would provide an ideal facility for prototype development and for training.

Graduates from the Institut Polytechnique Secondaire (IPS) will act as trainees in the design and testing of woodstoves at the center and then oversee the design, adaptation, and testing of stoves in each of the selected towns.

It is initially anticipated that an outside woodstove expert will spend two weeks providing hands-on training, based on progress that has already been made in the neighboring countries of the Sahel.

It is suggested that, as an outside expert, Dr. Tim Wood of VITA be contacted. Wood is currently working with CILSS (Comite Permanente Inter Etats Contre la Lutte de la Secheresse dans le Sahel) in Ouagadougou and is the coordinator for appropriate technology activities, including woodstoves, in the Sahel. If Dr. Wood himself is not able to conduct the two-week technical training, he would be able to recommend the names and addresses of others (probably Voltaics and Senegalese) who could do the job.

The third phase of this project consists of limited testing by local users--women--of the models that perform successfully in the workshop. It is estimated that at least three or four models will reach this stage of development and that each will undergo limited field testing so that a valid basis for comparison will exist. The Ministry of Social Affairs can implement this portion of the project, with part of the Ministry, the Centres de Promotion Feminine (CPFs--Women's Centers) countrywide, as the focal point. CPFs can identify volunteer families, in whose homes the test stoves will be built. The Pouvoir Revolutionnaire Locale (PRL), the neighborhood political structure, can inform people of the program and, later on, the results.

Prototype stoves will be built in the homes of volunteer families as well as in local hospitals, schools, and CPFs. The CPFs will then follow the utilization of the stoves on a daily basis, noting both positive and negative reactions from the users. In light of these observations, and using suggestions from the participants, any necessary modifications will be made, or new stoves designed if warranted. The stoves will again be tested by local families and the process repeated until at least two designs meet with a high degree of acceptability.

The fourth phase of the project is the dissemination throughout the selected towns of the successfully tested stove models. This can be accomplished by collaboration between the trained IPS graduates and a variety of women's organizations. Included among these groups could be the Ministry of Social Affairs (CPFs), the Comite National de l'Union Revolutionnaire des Femmes (CN/URFG), the Comites Regionaux des Femmes (CRF) the Comites Feminines des Sections, and the Bureaux Speciaux des Femmes (BSF). The above mentioned groups are already existing networks through which both government policy and officially sanctioned activities are communicated and supported.

Presently being planned in Guinea is a Comite Nationale Pour l'Economie de l'Energie Domestique that will set government

policy on matters relating to home fuels consumption. This committee will consist of:

- The Institut National de Recherche et Documentation de Guinee (INRDG)
- The Direction Nationale des Eaux, Forets et Chasse
- The Ministere des Affaires Sociales (Direction Generale des Centres de Promotion Feminine)
- The Comite National de l'Union Revolutionnaire des Femmes de Guinee.

A director for the woodstoves program, to be nominated by the INRDG, will coordinate all phases of the project in each of the six designated towns. This is a logical extension of the INRDG's coordinating role in other science and technology activities within the Guinean structure.

An improved wood conserving stove program for Guinea can benefit from the experience of an organization such as VITA, which has been active in woodstove projects over a long period of time and can supply technical documentation upon demand to project participants. In addition, woodstove programs and national committees are being established in each of the eight CILSS countries and, although Guinea is not a member of CILSS it would benefit from activities in these countries. Based on a similar program that began almost two years ago in Ouagadougou, there would be between 400 and 500 stoves in use in Conakry by the end of the project period and a correspondingly smaller number of stoves in use in each of the towns subsequently involved.

It would first be necessary to analyze thoroughly the wood supply and estimate the degree of acceptability of new cook stoves.

The cost of a suitable stove would be about $25. As in Upper Volta, it may be necessary to subsidize stoves.

Other Energy Resources

Insolation is believed to be only moderate due to the approximate six-month rainy season. The wind energy resource is small. Biomass production (energy farming) could be substantial but would require dedication of land, water, labor, and capital resources that would perhaps be better applied to food production.

Although the amount of agriculture and forestry wa tes available for energy production was not determined, those wastes have been used elsewhere as combustible material to provide heat for cooking, grain drying, and small industrial processes.

Briquetting, or pelletizing, of woody wastes such as bagasse, coconut fibers, rice husks, straw, and sawdust has been advanced as a solution to the problems associated with the low density of the materials and transportation costs.

Manufacturers in India, Upper Volta, Switzerland, Japan, and the United States have designed fuel briquette machines for marketing. These range from manually-operated machines of small production capacities (see Figure 14) to electric motor-powered plants capable of producing between 100 and 15,000 kilograms of briquettes per hour. Each FAPA could choose or develop the type of briquette machine that would be most suitable to the local availability of resources (e.g., waste materials, labor, electricity) and either local or regional demand for fuel briquettes.

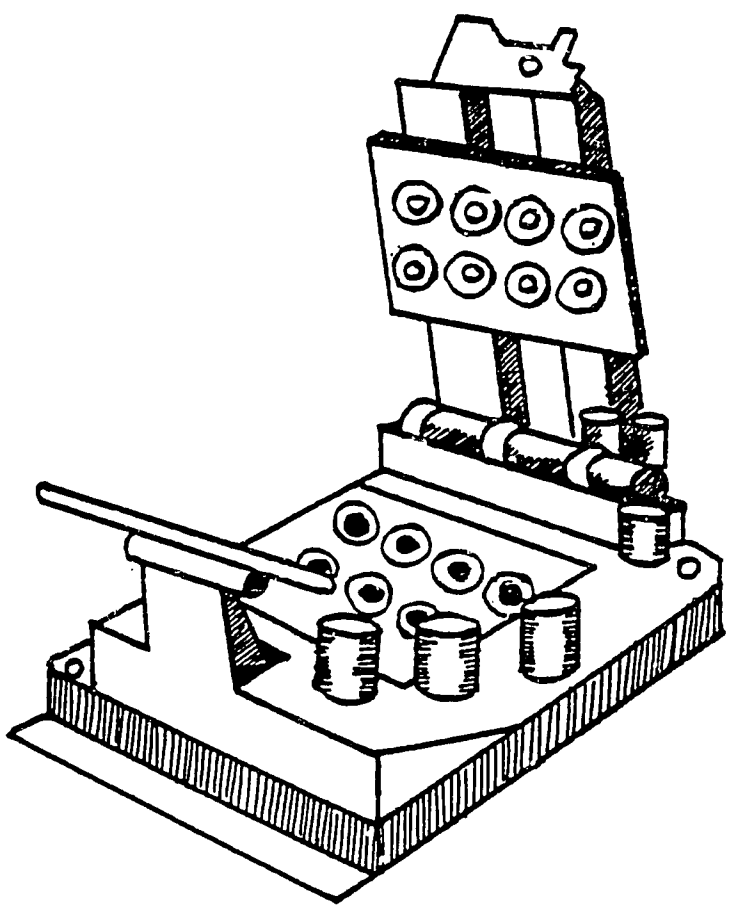

Figure 14. Manual Briquette Maker

In summary, the most promising local energy resources for Ditinn are hydro-energy for electricity production, and animal dung for biogas and fertilizer production. Installation of 280-kW hydro-electric capacity including a water storage reservoir above the Ditinn waterfall is suggested. Installation of 400 cubic meters (maximum) of biodigester volume producing 150 cubic meters of biogas per day from the dung of 500 animals is also suggested. That gas would be used to replace wood for cooking. Improved wood-conserving cook stoves are recommended for introduction, adaptation, and testing in Guinea.

V. WATER SECTOR REPORT

SECTOR OVERVIEW

Background

Guinea is a country with plentiful water resources and the human skills for management. Viewed on an annual basis, there is abundant rainfall, surface, and ground water. There are numerous graduates of college level technical programs with coursework in water resource management. There exists a structured hierarchical government/party political system with the mandate to make full and wise use of these human and natural resources.

In practice, however, these resources could be better utilized. In much of Guinea, rain falls primarily during six or seven months of the year, leaving much of the country dry for five or six months. Some rivers actually cease to flow during this period; the ratio of the largest flow to the smallest flow exceeds one hundred in many watersheds. Ground water levels in wells routinely fall ten or more meters from wet to dry seasons. Although the educated cadre may have classroom training in water management, even the Guinean professors may have little or no experience in the independent planning, design, installation, management, maintenance, or repair of equipment for utilizing water for domestic or animal consumption, irrigation, or hydropower. There is a gap between the stated goals and the practices of peasants.

Guinea is a nation where well designed technical assistance could have positive impact upon the lives of the primarily subsistence rural and urban population. The natural, human, and institutional resources exist, but need to be challenged into productive focus. Some existing technical assistance programs may provide some guidance as to factors that can improve or reduce the likelihood of success. The following sections will discuss the natural and human resources related to water resources in Guinea, review the range of local and joint donor/local programs, and present some preliminary suggestions of technological assistance interventions that may be appropriate.

Resources

The annual volume of rainfall increases from the northeast to the southwest in Guinea. The minimum is about 1150mm (about 45

Previous Page Blank

inches) per year on the border with Mali and the maximum is over 4399mm (170 inches) per year at Conakry on the coast.[1] The pattern of rainfall includes well defined wet and dry seasons.

The flows in rivers in Guinea mimic the patterns of precipitation. Flows in a river during the wet season may be more than 100 times more than flows during the dry season. Figure 13 shows the low and high daily flows for the Bafing River (a branch of the Senegal River) over twelve months in 1971. The maximum daily flow rate, 779 cubic meters per second, observed is nearly a thousand times the minimum flow of 0.9 cubic meters per second. Even the monthly average flows range widely, from 8.9 to 533 cubic meters per second (see Figure 15).

Precipitation data is gathered on a regular basis by the Service National de la Meteorologie. Their monitoring system, which includes approximately 50 stations, is currently being expanded under a United Nations aid program. Rivers in Guinea are gauged at 62 points on a regular basis by the Service National de l'Hydraulique. The gauging stations do not yet cover all rivers but only a number of Guinea's major rivers (see Table 6). Most of the stations gauge rivers on the eastern side of the Fouta Djallon Mountains. Those gauges that do exist for western slope rivers do not provide detailed information on the pattern of annual flow.[3] The pattern of flows is an important consideration in estimating hydropower potential (see Energy Sector report).

The groundwater levels in Guinea behave in a pattern consistent with the rainfall. Groundwater levels are high during the wet season, and fall ten or even fifteen meters during the dry season. The alternation of wet and dry seasons has resulted in extensive leaching of nutrient soil minerals and the formation of a hard subsurface crust of lateritic materials over much of

---

[1]Motor-Columbus Ingenieurs-Conseils, S.A., Annuaire Hydrologique, 1977, December 1972, Baden, Suisse, final map insert.

[2]Motor-Columbus Ingenieurs-Conseils, S.A., Annuaire Hydrologique, 1971, December 1972, pp. 120-125, Baden, Suisse.

[3]Mr. Paul Galzin, an engineer with the BURGEAP engineering firm speculates that better and more extensive river flow data are available in Paris from the archives of the colonial government.

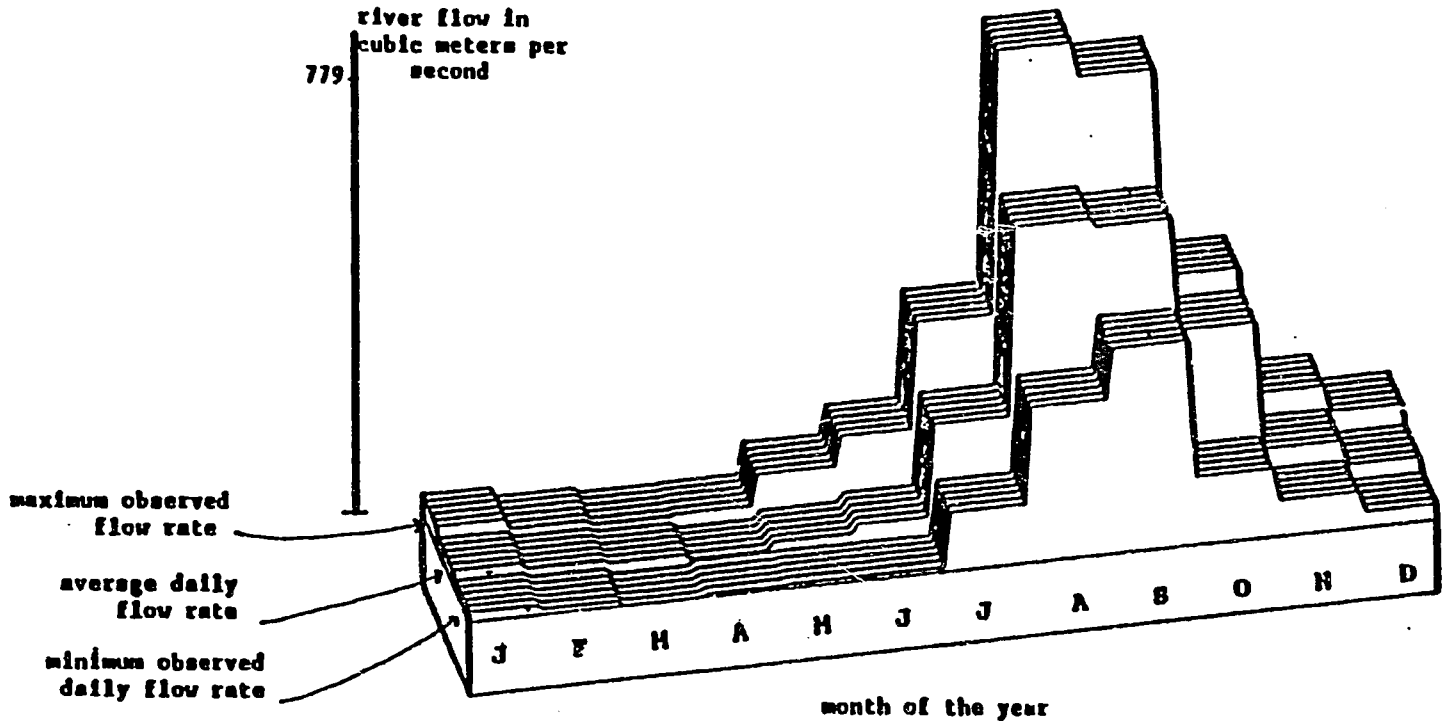

*Viewed from a perspective of twelve degrees azimuth. This figure was drawn at the computer system of the University of Texas at Austin, Glen Jansma, Programmer. Data derived from pages 120 to 125 of Annuaire Hydrologique, 1971.

Figure 15. Minimum, Average, and Maximum Daily Flow in the Bafing River by Month in 1971* (as Measured at Balabori)

Basin	Tributaries Gauged
Bafing	Bitinn Kioma Koloun Samenta Tene
Fatala	Samankou
Kakona	Makona
Kolente	Dua-oua
Koliba	Koliba Komba
Konkoure	Budi Garambe Kakrima Kokoulo
Little Scarcies	Mamouwol Mongo
Lotta	Lotta
Niger	Milo N[illegible]dain [illegible]iger Sankarani Tinkisso

Source: Annuairae Hydrologique, 1971.

Table 6. River Gauge Stations

Guinea. It consists mainly of a mixture of iron and aluminum oxides and hydroxides.[4]

ISSUES AND INSTITUTIONS

This section considers issues and institutions related to studying, obtaining, using, and disposing of water in Guinea.

---

[4]Nelson, Harold D., Area Handbook for Guinea, (Washington, D.C.: U.S. Government Printing Office), 1975.

Several organizations exist to identify the volume of water available from surface or underground sources for particular human uses. Other organizations plan for the control or extraction of water for human uses. Still other organizations construct, operate, maintain, or repair water systems. Still different groups are charged with sanitation in urban or rural areas. This section defines some of the water resource management issues, describes the Guinean organizations active in these areas, and identifies sources of external assistance.

Water Resource Identification

The Director Generals of (a) the Meteorology and Hydrology groups with the Department of Agriculture, Water, Forests, and FAPAs and (b) Mines and Geology are responsible for collecting data on various water resources in Guinea. At the central office in Conakry there are professional staff, a telecommunications center, and an equipment repair shop. Rainfall readings are collected every day at about fifty sites around Guinea. Each month the raw data are sent to Conakry for storage and tabulation. The staff appeared to be well trained, and several persons in the central office had been trained abroad in France, Italy, or the Soviet Union. The World Meteorological Organization has provided a grant to expand the number of meteorological monitoring stations.

The Direction Generale de l'Hydraulique is responsible for gathering data on streamflow in Guinea and on potential small hydropower sites. They manage a set of 62 stream gauges, many of which date from French colonial times. The gauges are not equally distributed around the country and some major rivers are not gauged. The recording system requires a person who lives near the gauge to read its level twice a day and to send the raw data each month to Conakry. The most recently published annual report[5] indicated that no one reads the levels of a large number of gauges for at least a portion of the year. The raw river level data are sent to Conakry where they are stored and tabulated. River flow information is derived from river level data through the following steps:

(a) The two daily readings are averaged.

(b) Daily average levels are ordered in a table, showing the levels for each day of each month.

---

[5]Motor-Columbus, S.A., Annuaire Hydrologique, 1971, Baden, Suisse; 1972.

(c) Level information is substituted into a gauge site-specific equation of the form:[6]

$$Q = AL^2 + BL + C$$

In some areas the aluminum compounds predominate, giving rise to the bauxite deposits that earn Guinea so much of its export income.

The coast is lined with broad marshes and swamps and sedimentary soils. An alluvial plain separates the coast from Middle Guinea (The Fouta Djallon). The Fouta is a complex of elevated, relatively level plateaus, whose soil is predominately lateritic and hard. Lateritic formations are often as deep as 7 meters below the surface.[7]

Upper Guinea primarily has a structure of hard and lateritic savannahs broken by hard rock spurs and domes. Figure 16 is a map of the geological formations in Guinea.[8]

After gaining experience with the construction of about 60 wells and 90 springs in the Fouta Djallon and Upper Guinea, the SNAPE (Service National D'Amenagement de Points d'Eau) program has found several recurring patterns of subsurface geology. Figure 17 is an adaptation of their baseline information.[9] Note the difference between the wet season and dry season groundwater levels. This pattern affects both traditional and modern well construction methods and will be reconsidered later in this report.

Where Q represents flow in cubic meters per second, L is the height above some reference point at a gauge, and A, B, and C represent some coefficients derived from fitting the curve to several (no less than 4 and no more than about 20) joint

---

[6]Interview with Mr. Toumany Baro, Hydrologist, Service National de l'Hydraulique, Conakry, November 1980.

[7]Interview with Paul Galzin, BURGEAP engineer, Conakry, November 1980.

[8]La Societe BURGEAP, "Mission d'Evaluation Pour la Con titution d'Une Unite de Forage d'Eau en Guinee," Conakry: Republique Populaire et Revolutionnaire de Guinee, January 1980.

[9]Modified from data provided by a BURGEAP engineer.

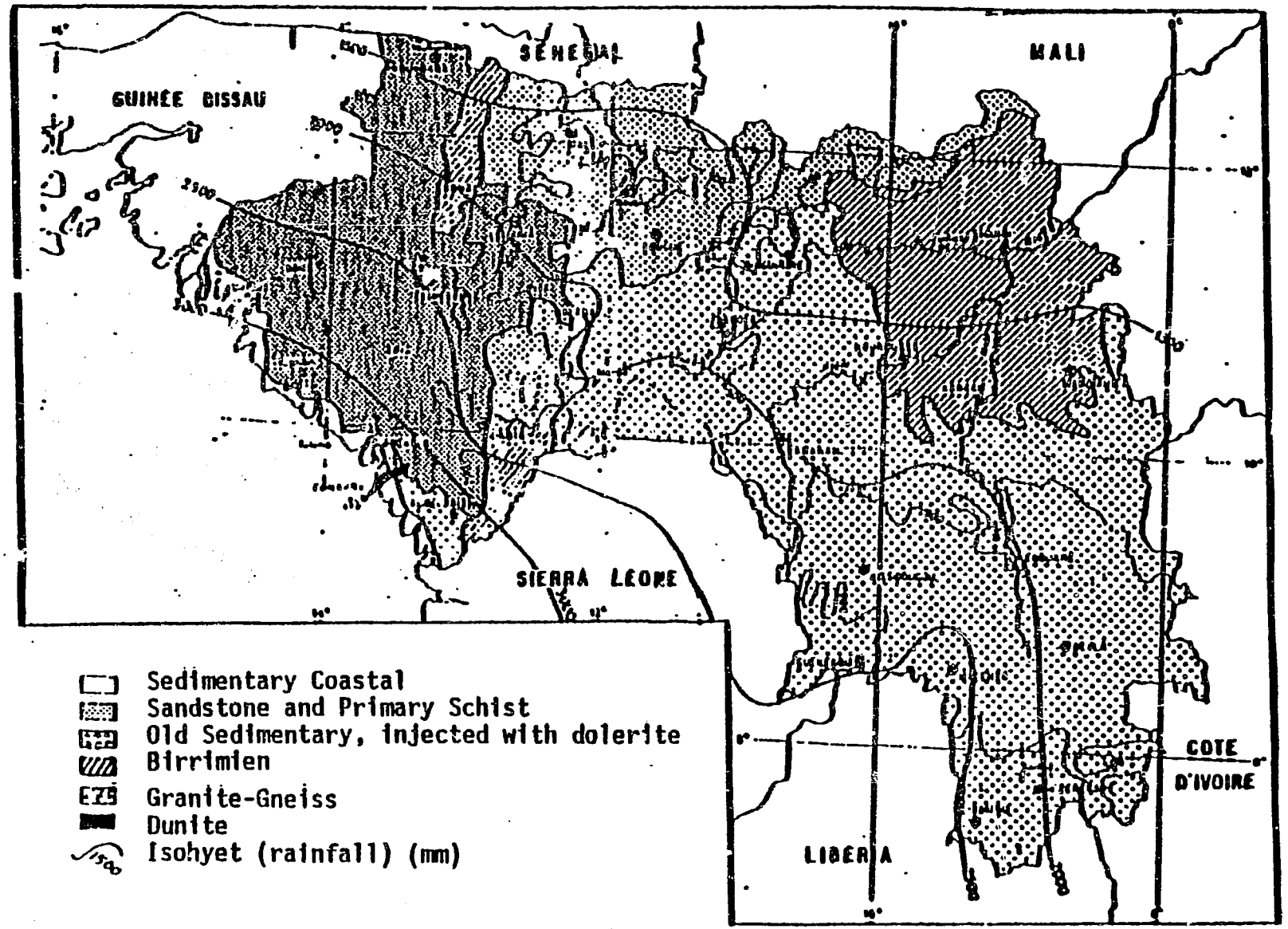

Source: Adapted from "Mission d'Evaluation Pour la Constitution d'Une Unite de Forage d'Eau en Guinee," La Societe BURGEAP

Figure 16. A Map of Geological Formations in Guinea

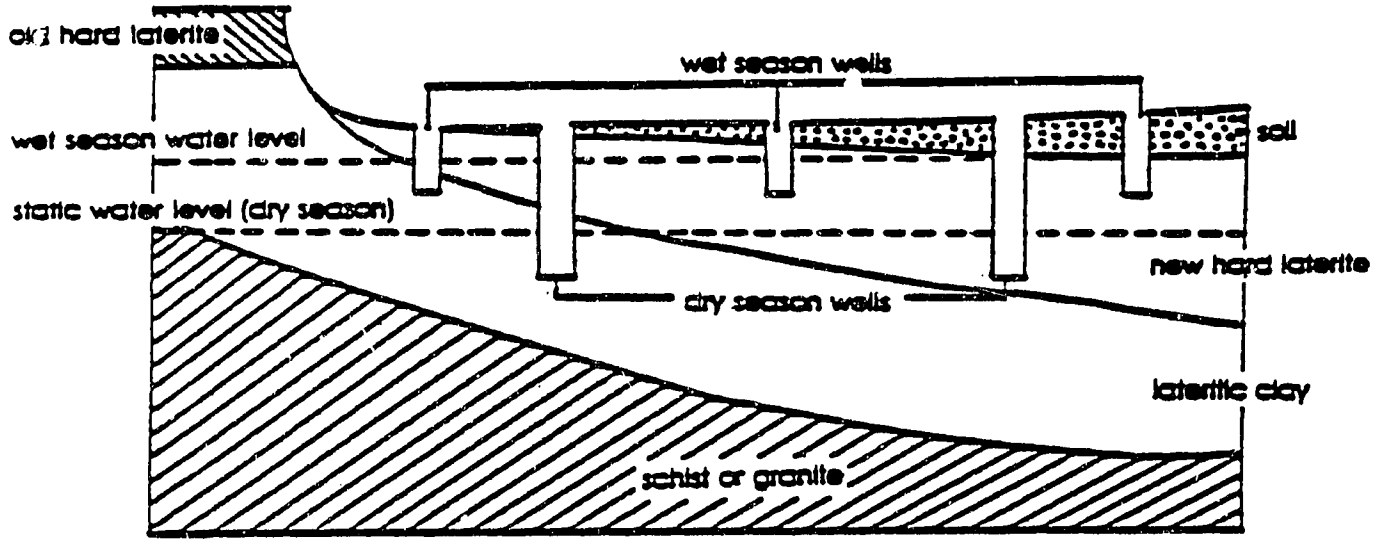

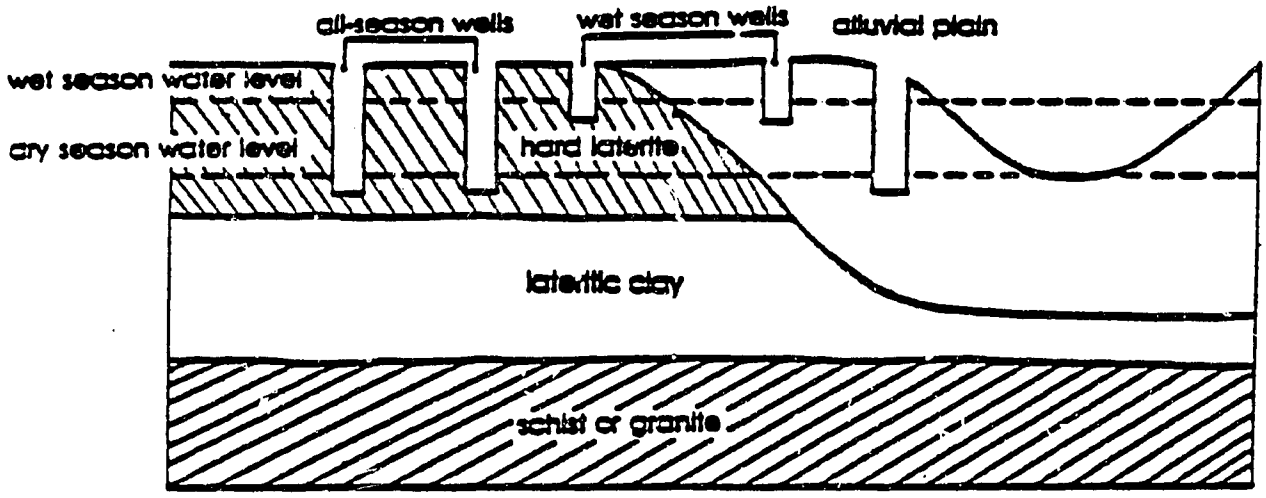

Figure 17. Geomorphological Examples in Guinea

observations of river level and flow. Table 7 and Figure 18 represent one of the best sets of such data, taken from the measurement station on the Bafing River at Sokotoro.[10]

Observation	Dates (1971)	Height above Reference (cm)	Volume of flow in m^3/sec
1	6/10	30	1.37
2	6/12	29	2.21
3	7/2	110	46.61
4	7/4	98	35.71
5	7/7	83	22.87
6	7/21	120	58.07
7	8/5	144	89.24
8	8/6	158	112.39
9	8/11	168	127.40
10	8/12	178	145.36
11	8/14	195	173.16
12	8/22	164	121.39
13	8/23	160	113.62
14	8/25	182	160.63
15	9/3	156	109.01
16	9/7	146	90.26
17	9/13	149	100.17
18	9/28	142	81.41

Table 7. Joint Measurement of River Height and Flow (for the Bafing River at Sokotoro in 1971)*

*Modified from Annuaire Hydrologique, 1971, Baden, Suisse: Motor-Columbus, S.A., 1972, p. 111.

The hydrology group also collects physical data on the major river tributaries, including length, surface area, and size of the drainage basin. In addition, this group has just recently begun to collect data on potential hydroelectric power sites.

The Direction Generale de l'Hydraulique has received some external assistance in their activities. Several of the senior cadres have received hydrological training abroad in China,

[10]Motor-Columbus, S.A., Annuaire Hydrologique, 1971, Baden, Suisse, 1972, pp. 111 and 117.

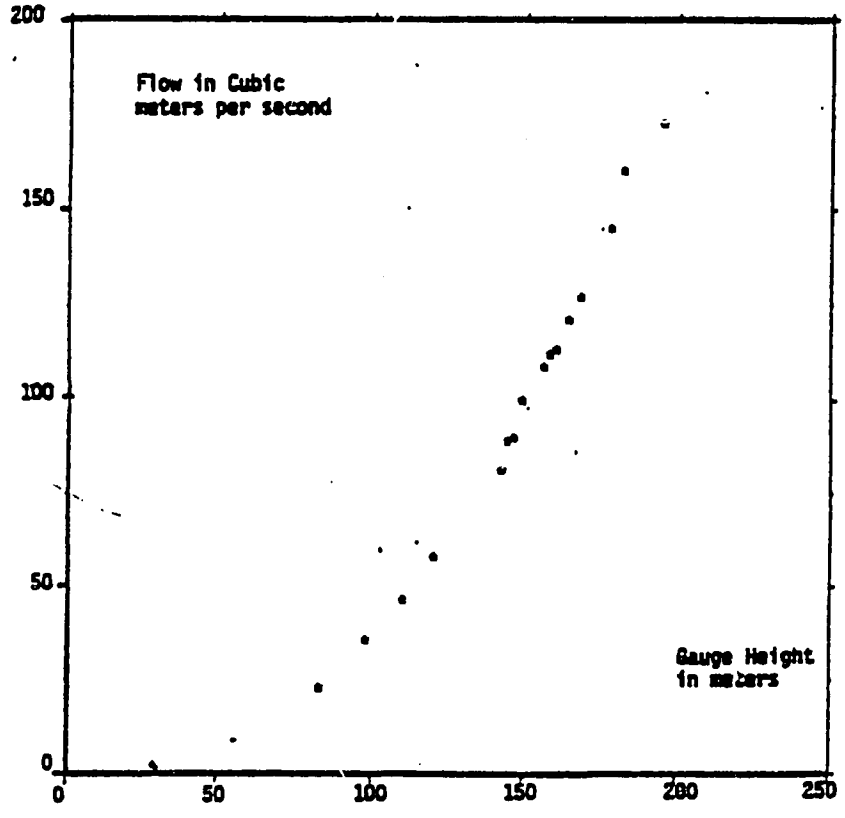

Table 18. Relation of River Height and Flow in the Bafing River 1971 (measured at Sokotoro)

Source: Annuaire Hydrologique, 1971, Baden, Suisse: Motor-Columbus, S.A., 1972, p. 117.

France, Italy, etc. For the past three years a French national has served as a technical advisor to the director. There have been a number of survey teams that have come for short-term missions. For example:

- A Bulgarian team apparently completed a survey of hydropower potential in the early 1960's. The team found a reference to them, but no copy of a report.

- A Swiss engineering firm completed a study of small hydropower sites in 1965.

- The same Swiss firm assisted in an evaluation of the river gauge program and assisted in its improvement during several years in the late 1960's and early 1970's.

- A Czechoslovak group completed a detailed (ten volume) study of major hydroelectric power sites in the Fouta Djallon and Upper Guinea areas.

Team members were not able to visit the Direction Generale des Mines et de la Geologie to collect hydrogeologic information. This section is charged with collection of data about the geology and groundwater potential in Guinea.

An alternate source of information on Guinea's groundwater geology is a series of reports prepared by BURGEAP, a French engineering firm, as part of their efforts to build wells and springs in rural areas in Middle and Upper Guinea. As BURGEAP will be in the process of extending their efforts into Lower Guinea and the Forest Region, they may be an excellent source for hydrogeological data.

Water Resources Planning

To discuss water resources planning in Guinea, it is useful to make a distinction between policy planning and operational planning. Guinea cadres direct policy decisions in the areas of irrigation, urban and rural water supply, and hydroelectric power. Guinean institutions appear to rely upon expatriate experts for feasibility studies and engineering design.

Irrigation

The Direction Generale du Genie Rural is the component of the Ministere de l'Amenagement, Peche, et Elevage with responsibility for rural infrastructure planning and construction. The Bureau for Studies and Programming within the Genie Rural in Conakry is active in project priority identification. No information was available to the team on the Genie Rural's degree of involvement in project planning.

The AT team was taken to the site of a large rainfall diversion structure in the Fouta Djallon. There is no information on whether the Conakry study section of Genie Rural was involved in selection of this project. According to documents available at the site and interviews with knowledgeable cadres, expatriate engineers from the firm of Euroconsulting performed the prefeasibility and feasibility studies and designed the diversion structure.

Regional brigades of Genie Rural exist throughout the country (inadequate information was available on the number, size, and distribution of such groups). In the diversion dam case, it

appears that that regional brigade did not have a planning role.

Water Supply

L'Entreprise Nationale de Distribution d'Eau en Guinee (DEG) within the Ministere de l'Energie et Konkoure has responsibility for planning, constructing, and managing urban water systems in Guinea. The DEG apparently has responsibility for seven of the existing urban water systems in Guinea and two systems that are under construction (see the sections on construction and operation). The DEG is also involved with planning new systems. Prefeasibility studies exist for 25 proposed urban water systems and detailed feasibility reports for seven systems.

A bureau for studies and programming within DEG apparently determines priority needs for urban water systems. All prefeasibility and feasibility studies are prepared by expatriate engineering firms approved by the DEG and the donor institution(s) underwriting water system construction.

DEG also supports problem identification studies related to urban water supplies. One such study, on the potential for ground water pollution in Conakry from privies, septic tanks, and underground disposal of high-organic industrial wastes, has recently been conducted by BURGEAP.

The Service National d'Amenagement des Points d'Eau (SNAPE) is responsible for planning for construction of wells and springs in rural areas. The Guinean cadres of SNAPE have established certain priority rules for selecting amongst alternate sites for rural water development (see Table 8). SNAPE has retained the firm of BURGEAP to conduct site feasibility analysis and program site development.

BURGEAP has surveyed 9 of 33 regions in Guinea for rural water needs. One BURGEAP estimate is that 6 to 11 thousand wells or springs will be needed just to serve people in villages with urgency levels one through three. Initially a BURGEAP engineering advisor did the engineering designs for wells and springs. Over the past year Guinean cadres began to design the well/spring developments, although the BURGEAP advisor still provides technical advice and design review.

Hydroelectric Power

In September 1980 the Service National de l'Hydraulique (SNH) was given responsibility for planning small hydroelectric

<u>Urgency Level #1</u>
Villagers must walk more than 1.5km for polluted local water (no alternative sources available).
<u>Urgency Level #2</u>
Villagers must walk more than 1.5km for drinking water.
A polluted water supply for nondrinking needs is available at less than a 1.5km walk.
<u>Urgency Level #3</u>
Villagers have available a source for drinking water that is less than 1.5km distant.
Villagers must walk for more than 1.5km for water for nondrinking purposes.
<u>Not as Urgent</u>
All other villages.

Table 8. Criteria for Village Water Supply Need

sites in Guinea. They have identified a set of towns that need electricity and collected data on the closest river and the number of residents in each town. Using urban electrification guidelines developed by an individual affiliated with the United Nations,[11] they have estimated electricity "needs" of these towns. When interviewed in November, SNH had yet to develop methods to study project feasibility or evaluate project benefits and costs. In the past, small hydroelectric power sites had been identified by expatriate engineering firms.

The staff of Service National de l'Hydraulique mentioned that planning for large hydroelectric power stations is the responsibility of the Ministere de l'Energie et Konkoure. That Ministry's planning activities are covered in the Energy sector report.

---

[11]Multiplication of a "needs per person" guestimate by the estimated number of town residents.

Conclusions

Considering all these planning activities, the team's impression is that Guinean cadres do identify priority problems, but do not tend to get involved with operational planning. It appears that few Guineans have the training or experience to undertake problem identification, prefeasibility, or engineering feasibility studies. Other than in the SNAPE program, the team did not observe Guineans engaged in detailed engineering design. The assessment and design roles are filled by expatriate engineers affiliated with donor institutions. This impression was reinforced by comments from Guinean water resource personnel, resident expatriates, and comments of Guinean administrative cadres.

The team discussed water resource planning with two agricultural engineers involved in water issues in two FAPAs. Each was interested in learning how to plan small-scale irrigation and water supply projects. When asked why they do not currently engage in such planning, the response was that they had never learned how, and had no experience designing structures. They were eager to be sent textbooks, design guides, or work with expatriates to develop engineering design techniques.

The subject of local engineering planning and design skills arose in several separate discussions with resident expatriate engineers. Each commented to the effect that the Guinean educational system does not yet produce water resource engineers with the skills needed for project planning and evaluation. All agreed that they would rely on expatriate engineering firms for all structural design.

This topic of water resources planning was touched upon by the Minister of Information and Ideology in his discussions with the team. This topic will be further discussed in the Recommendations section.

Water Facility Construction

Many of the water resource structures in Guinea were constructed by non-Guineans. This has begun to change as the cadres of Genie Rural and SNAPE programs gain experience respectively in irrigation and rural water supply structures.

Irrigation

Brigades of the Genie Rural are engaged in construction of rural irrigation projects. The AT Exploration Team observed

the Sagara diversion dam under construction by Genie Rural under supervision of expatriates affiliated with the European Economic Community (EEC). The structure consists of a small retaining dam for diversion of wet season rains to irrigate 45 hectares. There is (a) a low dam with spillway, (b) an irrigation canal (a closed channel for about 50 meters followed by an open channel) for diversion of rain water, along with irrigation structures that minimize sedimentation, and (c) a canal/diversion ditch for keeping other surface water flow out of the irrigation canal. This structure is one of two wet season irrigation structures being constructed by Euroconsulting engineers for Guinea using EEC aid funds.

The expatriate staff required to support these irrigation works is rather large. A resident BURGEAP engineer estimated that about 13 expatriate person years have been needed for the construction of just the Sagara 45 to 50 hectare irrigation project. The Labe Genie Rural works brigade does the actual construction under the supervision of the Euroconsulting works director. When the AT Team was on site, the expatriate works director was absent and the Genie Rural brigade leader was directing construction.

Water Supply

This gradual replacement of expatriates by skilled Guinean construction workers has gone further in the SNAPE well and springs development program. The SNAPE program began in August 1978 with the arrival of EEC funds to support supply imports and an expatriate work manager from the BURGEAP company. Construction began April 1979, after the arrival of the chief of mission. By August 1979, the SNAPE cadres had completed 14 dug wells and 13 spring developments (see Table 9). These early water works were planned and constructed by the expatriates, as assisted by a Guinean SNAPE works brigade.

Over the next nine months BURGEAP employees continued engineering design activities for wells and springs. Four Guinean works brigade leaders directed activities of two well spring development brigades.

Over the past six months the expatriate staff has moved into a supervisory mode and no longer develops well/spring engineering designs. One AT Team member observed how a Guinean works brigade was developing a spring site designed and sketched by a Guinean engineer. The expatriates provide some quality control supervision and advice to the Guinean staff.

It is known the degree to which Guineans have been involved with construction of urban water systems. Table 10 lists the

Well Construction (all reinforced concrete dug wells)

Number completed	14
Average depth	16 meters
Average time to dig	2.2 months
Average flow	$1m^3$ per hour
Cost per well	36,900 FF and 167,200 Sylis
Cost per meter	2,300 FF and 10,500 Sylis

Spring Development

Number completed	13 (4 by well construction and 9 by creation of a gravel/sand filter plus concrete wall stabilizing flow)
Cost per spring	15,800 FF and 42,000 Sylis

Construction Schedule 1979-1981

Period	Wells Dug	Springs Developed
1979-1980	42	81
1980-1981	45	90
1981-1982	approximately 140 structures per year	

Source: Interviews with SNAPE personnel in Conakry and Labe, November 1980.

Table 9. SNAPE Program Statistics

ten urban water systems that either exist or are being constructed. In an interview, the DEG staff implied that the technological sophistication of the most recent water systems requires close supervision by World Bank staff.

Hydroelectricity

It is not known whether Guineans gained much construction experience from the two Chinese dam construction projects. From numerous interviews with Guineans, it appears that the Chinese designed and built the Pita and Dabola dams on their

City	Water Source	Source of Support	Construction Firm	Technology
Boké	surface water	perhaps the mining company?	not known	conventional (rapid sand filtration)
Conakry	ground and surface water	World Bank has supported latest improvements	possibly an English firm	conventional
Dinguiraye	surface water	not known	not known	not known
Fria	not known	private	private	not known
Kankan	ground and surface water	World Bank	an Italian firm	conventional
Labé	surface and ground water	installed by the French in colonial times (?)	not known	conventional (?)
Mamou	surface water	World Bank	not known	conventional
N'Zérékoré	not known	USSR	USSR	not known
Faranah	not known	World Bank (?) (being constructed)	a French firm	conventional
Gueckédou	not known	World Bank (planned)	a French firm	conventional
Kindia	groundwater and surface water	World Bank or Italy (?) (partially complete)	an Italian firm	conventional

Source: Interviews with DEG and BURGEAP staff, Conakry, November 1980

Table 10. Existing Urban Water Systems in Guinea

own. These dams apparently are dry for about two months a year. It is not known whether the inadequate storage is due to underdesign, insufficient consideration for percolation in site selection, or other factors.

Conclusions

In summary, Guineans have demonstrated an ability to learn water resource facility construction techniques when given the opportunity. Construction skills appear to be not as serious a limiting factor on water resource infrastructure development as the absence of water resource planning skills and experience.

Operation, Maintenance, and Repair

As the AT Team was unable to visit any operating water facilities, there is insufficient information to make statements regarding the manner in which they are operated, maintained, and repaired. It is, however, possible to discuss impressions and some information on the organizational structure for management of rural and urban water supply.

Urban Water Supply

The DEG urban supply organization has evolved a decentralized system for equipment maintenance and water supply monitoring. Each of the eight operating weather plants has its own maintenance staff and its own small water quality laboratory. Seven of these facilities are affiliated with DEG. Apparently the Russian-built system in N'Zerekore is managed by the Ministere des Mines et Geologie. The central DEG staff in Conakry does include a service section, a training staff, a coordinator for water supply facilities, and a studies department. Each water system is somewhat independent; systems do not report the observed water supply quality to Conakry and have infrequent access to maintenance/repair assistance from Conakry.

The World Bank does maintain several expatriates to advise the DEG system. These are attached to (a) the training group; (b) the central repair group; (c) the water treatment group (presumably the Conakry treatment plant); (d) the group of engineers dealing with the distribution system; and (e) an electrical machinery repair group.

The DEG operational record for water supply systems is mixed.[12] The Boke, Dinguiraye, Labe, and Mamou systems all

utilize surface water and use sedimentation and filtration to remove suspended matter. Apparently the treatment plant portions of each of these systems are frequently by-passed in actual system operation. This practice could, if long continued, result in silting in the piped distribution system. One unsubstantiated report was that such siltation may have already affected the Kankan system to the point that the portion of the Kindia system that is operational is also reported to function poorly.

These unsubstantiated reports are supported by the team members' visit to Labe. Although this city has a water supply system, it doesn't cover a large part of the town. Perhaps this coverage reflects underdesign or rapid growth in Labe. However, the fact that even the Syli Hotel rarely had piped water pressure and relied upon on-site wells for water supply indicates that the water system could be better maintained.

The mixed operation/maintenance record is not surprising due to the complexity of at least some of the water systems. For example, the Farana system is reputed to be a most modern coagulation/sedimentation fast pressure filtration system. Although such systems are standard for cities in advanced industrial nations, they are relatively complicated and require highly trained operation and maintenance staff. According to a BURGEAP engineer, the Guineans could purchase a number of simpler water supply systems that are easier to operate for the cost they will incur for one advanced system that may be by-passed after maintenance difficulties.

The cost of urban water varies with the use. The general residential water rate is apparently eight Sylis per cubic meter. Commercial and industrial water is apparently charged at a lower rate. No one explained the charge system for standpipe users.

Rural Water Supply

As the SNAPE program is rather new, there is not a great deal of information on rural water supply operation and maintenance. SNAPE appears to employ three strategies to achieve good operation and maintenance: low-maintenance design, community participation, and a maintenance brigade.

---

[12]This information represents the team's interpretation of interviews with DEG staff and with resident expatriate engineers.

SNAPE apparently designs low-cost and low-maintenance systems whenever possible. For example, a spring or reinforced dug well involves much less maintenance and is less costly than a drilled or driven well system that utilizes hand- or motor-driven pumps.

SNAPE only develops a well or spring if there exists a high priority need and if the community makes a significant commitment to support the system. SNAPE develops water supplies primarily for villages with the highest level of urgency (see Table 8), villages that are more than 1.5km from any water supply. Even applying this restriction, more villagers want a larger water supply than SNAPE can serve.

Any village must demonstrate that they want the water system by providing in-kind services to support the works brigade, such as food and lodging. In addition the village must develop plans for managing and repairing the system, usually by selecting person(s) to be responsible for system operation and maintenance. The AT Exploration Team is under the impression that villages are not charged the costs of water system construction and that individuals do not pay fees for rural water consumption. Although village cooperation during the construction phase works well, some local operators may not be effective water system managers. A visit to two operating springs indicated drainage problems[13] that could have been mitigated by an active local person.

The final phase in the management scheme is the creation of a works brigade for well maintenance and repair. UNICEF has agreed to provide hard currency to match Guinea's Syli contribution to develop a team that will travel among villages on a regular basis to repair hand pumps. UNICEF is supporting an experiment with hand pumps (four are being tested) in the Fouta Djallon to find a standard hand pump for Guinean conditions (see the section on hand pumps in AT Inventory). Once a standardized design is adapted, UNICEF will support the purchase of several hundred hand pumps. The pump maintenance brigade is being developed to provide technical assistance, parts, and support to operators in the villages.

Conclusion

Maintenance and repair of water works is a problem in Guinea. Although cadres may be aware of the importance of these

---

[13]Backup of water due to a closed spring outlet and poor drainage below the washing area.

functions, there is room for improvement. See the Recommendations section for further information.

Waste Disposal and Sanitation

There exist a number of sanitation problems in Guinea, including:

- Contaminated water supplies
- Human waste disposal practices that can lead to contamination of water supplies
- Construction and living patterns that allow rodent and insect infestation
- Food sold in markets is not protected from insects but is spread on the ground or on tables or mats
- Garbage collection is not a well developed sector of the urban economy.

Conakry has some rather difficult solid and human waste problems. Portions of Conakry are apparently served by a waste disposal and sewerage system of some kind, although the team's Guinean hosts were unable to arrange for team members to observe it. Apparently septic tanks do exist in the western part of Conakry, with post-tank discharge directly into the sea. Other areas have cesspools. However, the disposal of solid and human waste poses a major health problem.

Both the Ministry of Health and PRLs (Pouvoir Revolutionnaire Local) are active in rural sanitation. These activities have received assistance from East Germany and UNICEF resources. Due to the coverage of their current programs the Guineans do not consider this to be an area that requires VITA assistance.

The Ministry of Health (MOH) is charged with sanitation assistance to rural areas. In each of the 33 regions of Guinea exists a mobile preventative health team, composed in principle of one director and one or two other persons. Their charge is to reduce the incidence of malaria, onchocerciasis, schistosomiosis, leprosy, and other water-borne and parasitic diseases.

Other than the physicians, the staff is composed of "aides de sante" (health aides). About 300 high school graduates per year are accepted for a three-year course leading to the title of "aide de sante." About 25% of these aides are later invited to enter the University and study to become physicians. Other

aides are available for field work throughout the country and staff work in Conakry.[14]

About 300 "agents techniques" (technical aides) are graduated each year from training courses in Kankan and Labe.[15] Mobile teams are also organized to travel among the 320 arrondissements to provide technical assistance to the PRLs and the agents techniques. Each mobile team in principle has a jeep, basic medical supplies, calcium chloride for waste treatment, vaccines, and information bulletins and posters in the local languages (see Figure 19). In practice these mobile teams are not often able to function, as many jeeps have broken down and no funds exist to import spare parts.

Several years ago UNICEF provided funds to support chlorination of rural wells and construction of rural latrines and septic tanks. Apparently UNICEF still supplies calcium chloride for water chlorination, although this effort may now be a part of the SNAPE program. The rural latrine program has apparently ended, due perhaps to Guinea's emphasis on the PRL level health committees (see below).

The PRLs are the building block of government, each one serving on the average of about 1,500 people. In each PRL there exists a social hygiene committee that consists of representatives of the PRL leadership, the local women's organization, and the youth organization.

The purpose of the social hygiene committee is to enforce sanitation regulations. Apparently there exists a rule that each person must have a privy in rural areas. The team was told that any person caught relieving him/herself in a place other than a privy would be heavily fined. The fine for not using a privy can be as high as 800 or 1,000 Sylis. The PRL social action committee is also supposed to provide guidance on solid waste disposal and control of water and vector-borne diseases.

Consideration should be given to providing incentives for privy use rather than a fine for failing to do so. The introduction of small biogas digesters, and a payment scheme for waste material, might serve to encourage good sanitation

---

[14]Interview with Yaya Diallo, M.D., preventive health physician in the Ministry of Health, November 1980.

[15]Ibid.

Figure 19. A Guinean Sanitation Poster

practices, provide energy, and produce safe organic matter to be used as fertilizer.

AT INVENTORY

There are a number of variations to the concept of "appropriate technology" throughout the world. The Guineans viewed a cannery, the FAPAs, a State Farm for cattle breeding, and factories as AT. The team saw AT in a much more modest sense, more intimately involved in the life and work of the individual peasant. This divergence of views frequently prevented extensive first-hand observation upon which to draw conclusions, because the team's hosts seemed to feel that it was not necessary to the intended purpose.

Water Supply

There are a number of well designs currently in use in Guinea. Skilled well diggers (puisateurs) exist throughout the areas the team visited. Recently, the SNAPE program has begun to incorporate concrete reinforcement into dug wells. There also is a hand pump experiment in process designed to select a standard design for Guinea.

Hand Dug Wells

Private hand dug wells were observed in the Fouta Djallon. They were dug by a pair of puisateurs--one digger and his assistant. The digger sits on his haunches, draws a circle of about 1.4-1.8 meters, and starts to pick at the edge of the circle. He moves around in a circle, gradually chipping away the earth that is removed by the assistant (see Figure 20). A special well pick may be used, as prepared by a local blacksmith/iron worker. Manufactured picks may also be used.

Well digging is a low status profession, and is not remunerative. One well that the team observed cost 3,000 Sylis, was 8 meters deep, and took one month to dig.[16] The well diggers vary the charges by the depth of the well and the type of soil. The area around Pita has a top level of laterite soil (highly permeable), a sandstone layer below (good water retention), and a clay layer below that is relatively impermeable.

---

[16]From interviews with a FAPA hydrologist and Mr. Paul Galzin in the Fouta Djallon, November 1980.

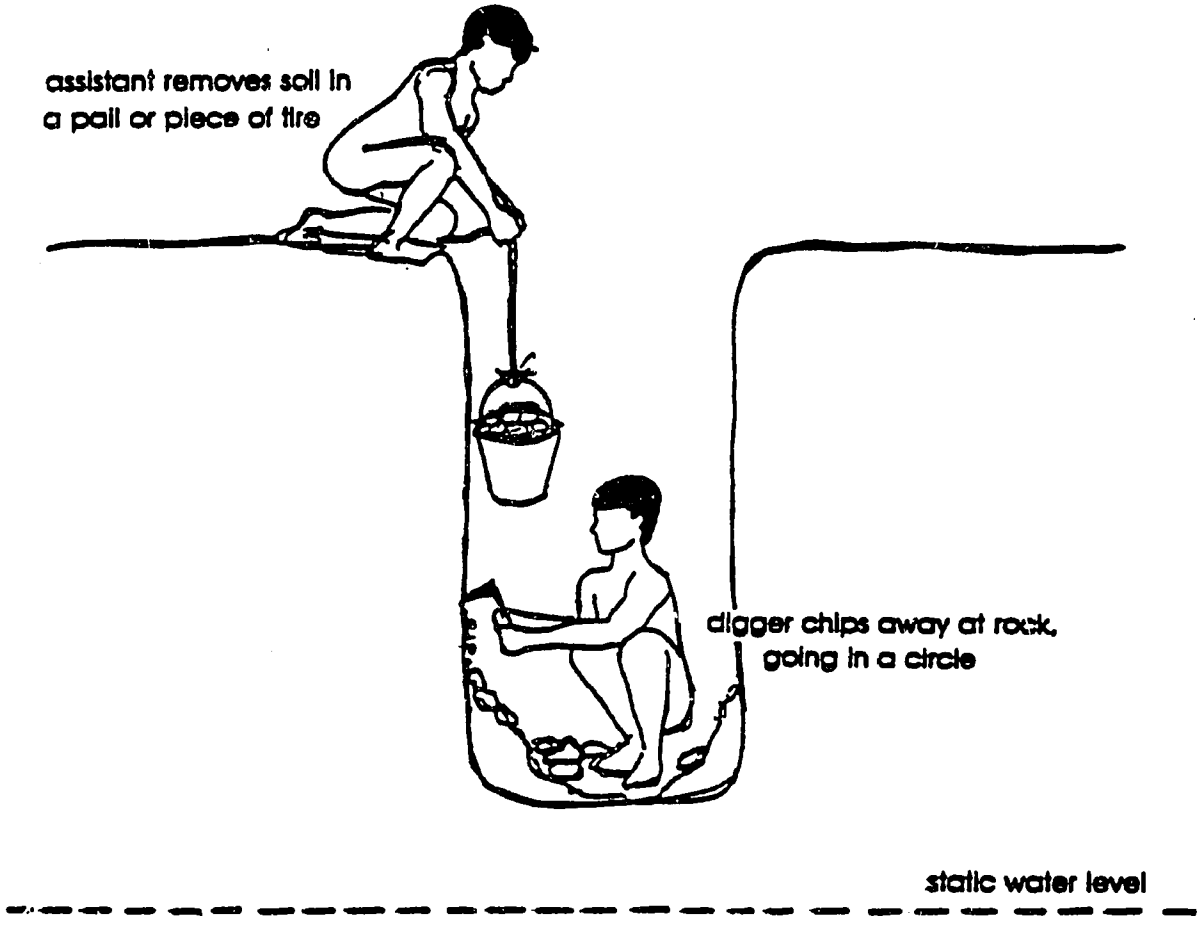

Figure 20. Guinean Hand Dug Well

This combination is appropriate for well digging. Other areas, particularly in the west coastal region, have a hard sandstone layer on the surface. This sort of soil is much more difficult to dig, as it is hard to enter it and the dug hole can easily collapse. In Upper Guinea people tend to live on the tops of hills, far above the water table.

One of the problems with hand dug wells in Guinea is that they have a short life. The water table moves up and down between the dry and wet seasons. Thus, a well dug in the dry season to just reach the static water level may be 10 or 20 meters below the static water level in the wet season. These fluctuations lend to erosion of the well hole, as illustrated in Figure 19.

Dug wells can easily provide sufficient water for many Guinean families. The SNAPE program estimates that if a well is more than 500 meters from a village, the average water consumption will be about 10 liters per person per day (3 to 4 liters for home consumption and 6 to 7 for washing of food and clothes).

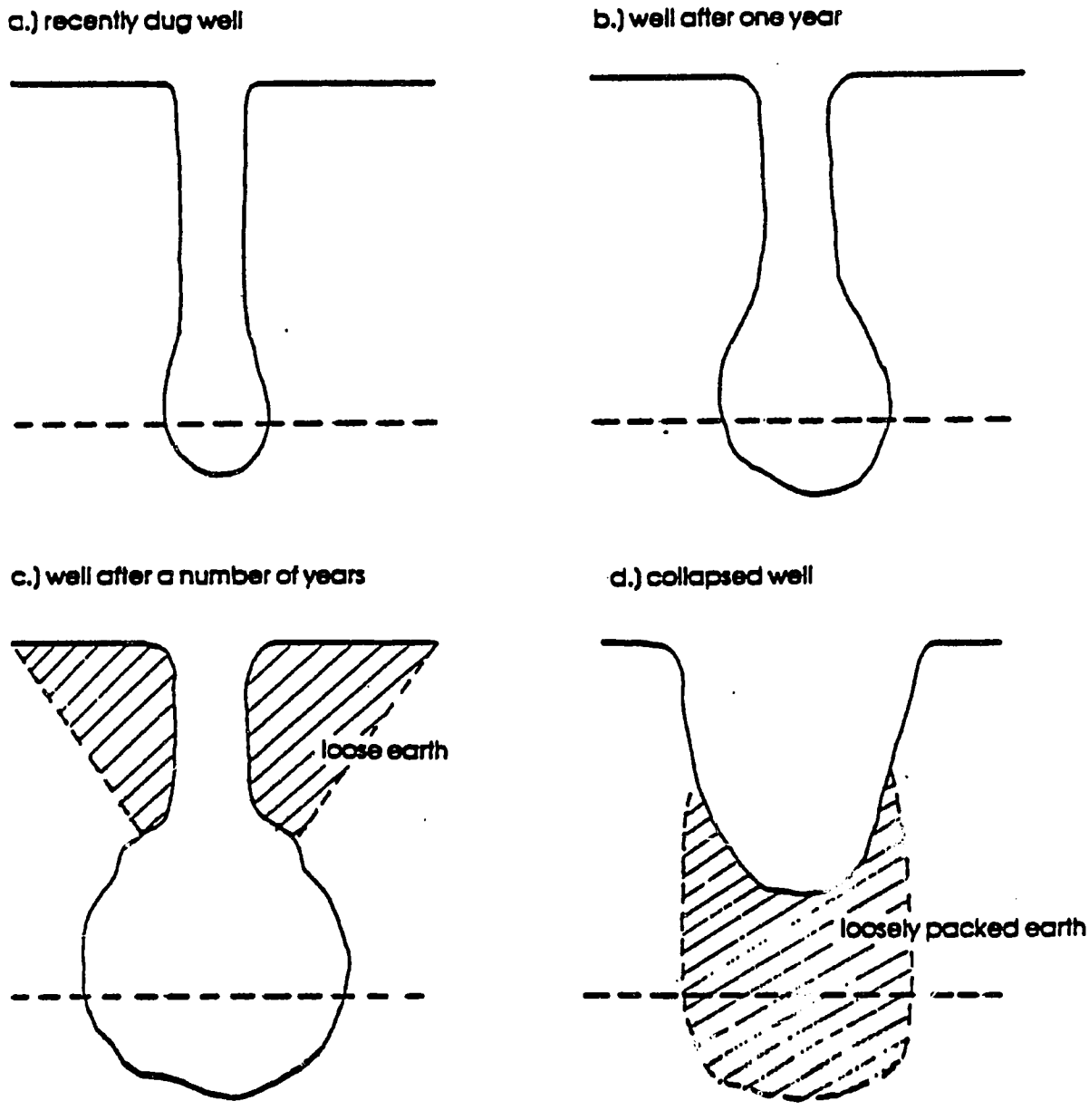

Figure 21. Evolution of a Traditional Guinean Well

Consumption rises to about 25 liters per person per day for a hand pump located within a village. A survey of 100 homes in seven towns in Guinea with standpipe or home water service observed consumption on the order of 60 liters per person per day.[17]

---

[17]Interview with a BURGEAP engineer, Conakry, November 1980.

Reinforced Dug Wells

The SNAPE program utilizes local well diggers and modern equipment (jack hammers, picks, and reinforced concrete) to prepare reinforced wells. Such wells are less likely to erode during the fluctuations in static water level. Figure 22 illustrates a reinforced dug well. Tubular segments of reinforced concrete are prepared in advance and lowered into the well hole as it is dug. People draw water from both traditional and reinforced dug wells using rope and some water vessels.

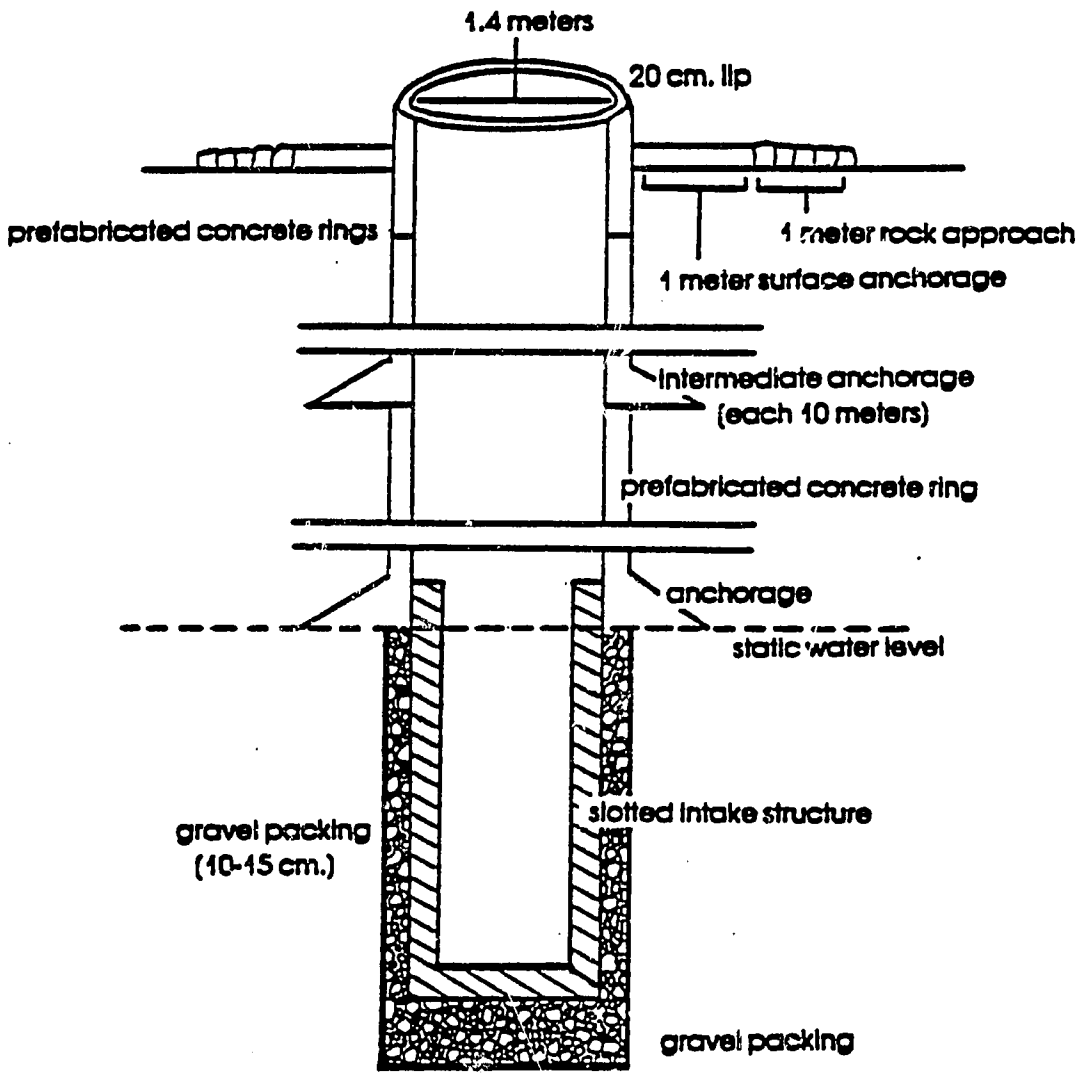

Figure 22. Reinforced Dug Well

Through the assistance of UNICEF and the EEC, the SNAPE program has begun to test four different types of hand pumps for suitability in Guinea. Figure 23 illustates three of the designs being tested.

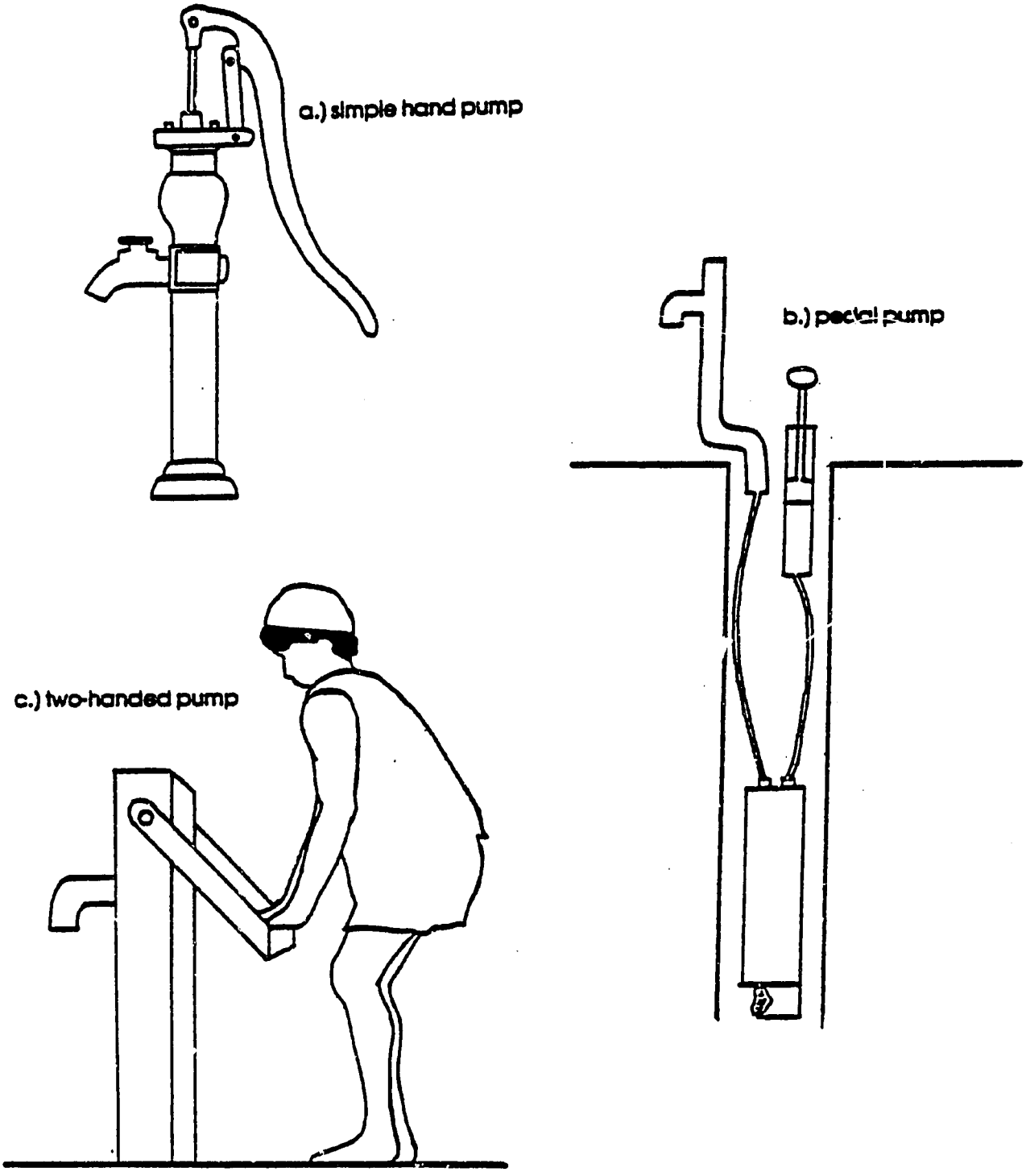

Figure 23. Hand Pump Designs Being Tested in Guinea

Spring Development

Due to the large volume of precipitation and the soil conditions in the Fouta Djallon, there exist a large number of

natural water seeps that can be developed into springs. A typical spring development is shown in Figure 24.

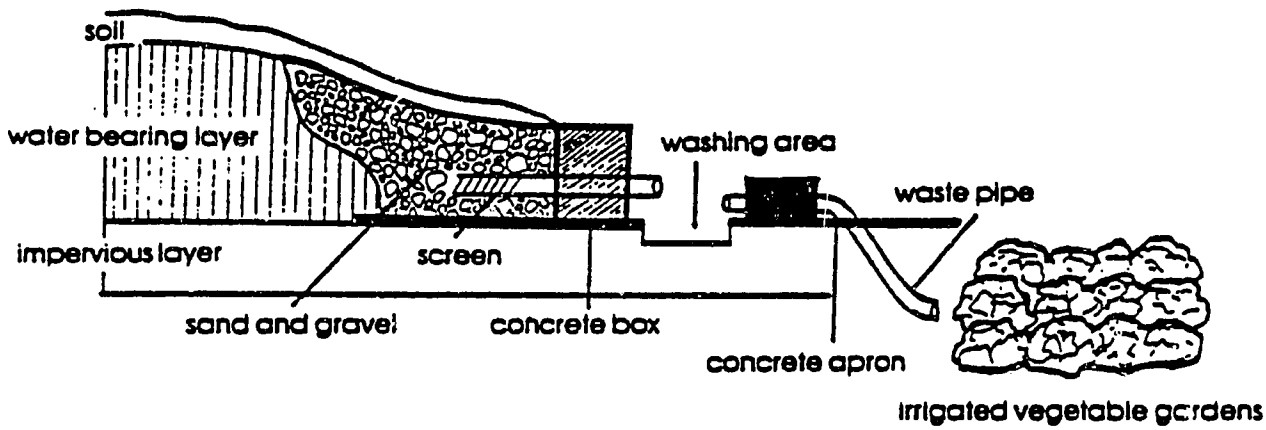

Figure 24. Typical Springs Development

Drilled Wells

UNICEF has agreed to assist the SNAPE program by purchasing a drilling rig for development of drilled wells in Upper Guinea. Groundwater conditions and living patterns in this area make it difficult to rely on dug wells. The rig will be used to drill 25- to 50-meter bore hole wells that will be fitted with hand pumps.

Waste Disposal

It is common to observe pit privies in Guinea that look somewhat like Figure 25. A woven reed privacy fence surrounds the privy area, with an opening on one side for entrance or exit. The privy itself is just a dug hole covered by metal, concrete, etc., with a hole for collection of excreta.

It is less common to observe a septic tank system in Guinea, although apparently they do exist. The cost of constructing a system similar to the one illustrated in Figure 26 is somewhere between 20,000 and 25,000 Sylis.

Irrigation

The USAID has agreed to assist the SNAPE program by financing dry season vegetable plots in conjunction with springs. The

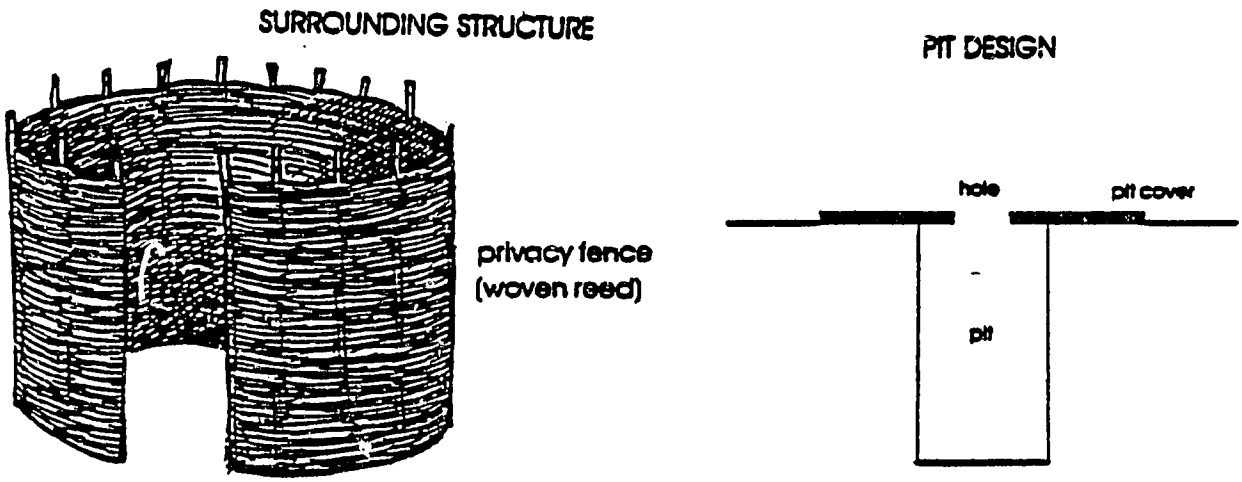

Figure 25. Guinean Pit Privy

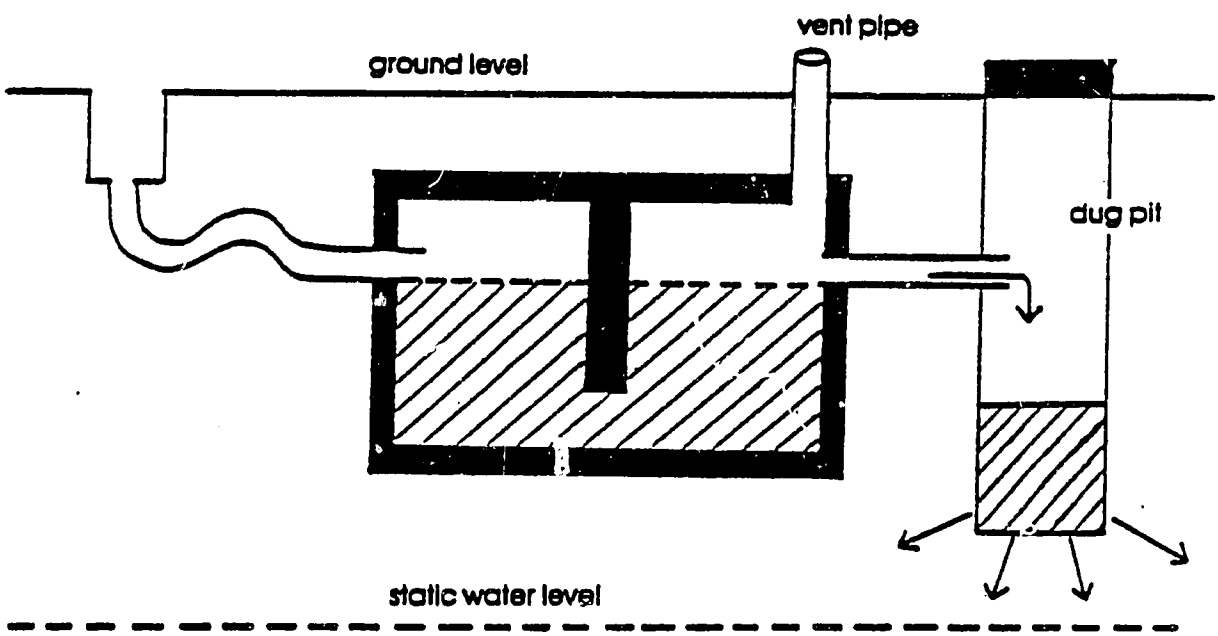

Figure 26. Guinean Septic Tank System

excess water and wastewater flow from SNAPE-developed springs will be rechanneled into small vegetable plots for village women. Figure 27 illustrates this sort of spring development.

Water Pumping and Storage

In addition to hand pumps, Guineans have a good deal of experience with diesel-fueled motor pumps for water transmission. For example, the team observed a diesel pump at the Ditinn State Farm (a livestock breeding experimental farm), which is apparently used on a nearly continuous basis.

The pattern of precipitation in Guinea makes it possible to utilize the ground itself for storing water. During the wet season there is apparently so much rain over most of Guinea that the static water level is not far below the surface of the ground in many areas. In such cases it is possible to utilize the natural filtering activity of the ground to provide a ready supply of water via shallow dug wells.

In urban areas the team noticed that many families capture rainwater from roofs via a rain gutter system leading to a 55-gallon drum. Such water storage drains were ubiquitous in Conakry, for example.

Solid Waste Disposal

Despite the high volume information campaigns by the Ministry of Health and the PRLs, people in urban areas do not appear to give a great deal of thought to disposal of solid wastes. Conakry, in particular, has acute problems associated with solid waste disposal. The Team did hear that a European firm was just completing the construction of an incinerator for Conakry. Most of the rural villages visited were quite clean. This probably reflects the lifestyles of villagers as well as a greater sensitivity to the disadvantages of trash disposal near living quarters.

RECOMMENDATIONS

Prior to the Team's pre-exit interview with the Minister of Information and Ideology, his staff mentioned a number of their priority areas for technical assistance. In the water area, these items included:

- Machinery for small dams
- Machinery for irrigation

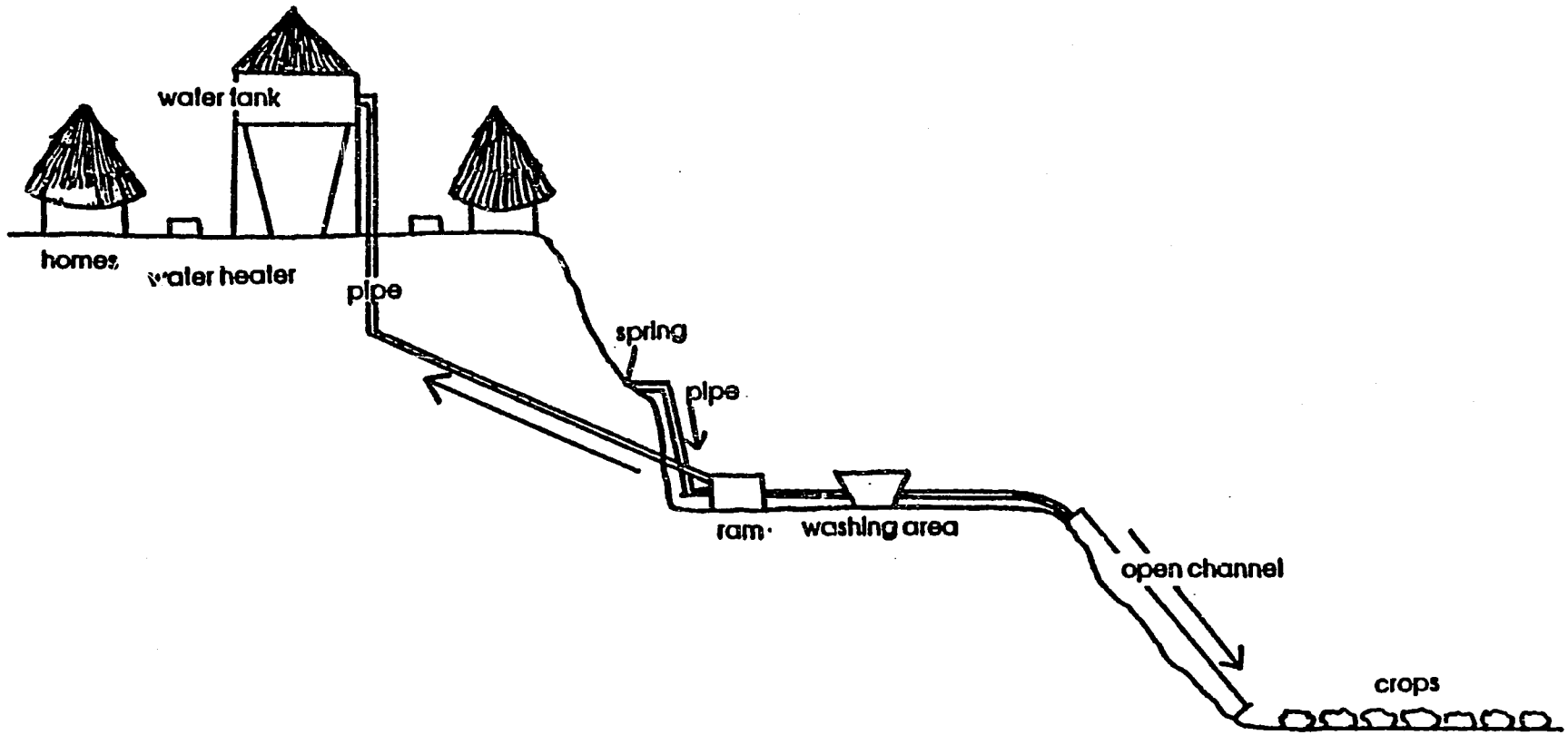

Figure 27. Use of Hydraulic Ram with Spring Irrigation System in the Fouta Djallon

- Equipment for hydrological measurements
- Training in construction of retention ponds and small irrigation dams
- Technical assistance in water resources planning.

The team finds it hard to support the notion of VITA's seeking support for the three classifications of equipment. Capital equipment in the absence of skilled personnel to use it has an unfortunate history in Guinea.

The team's hosts told them the story of the 4,000 tractors that Guinea imported for the peasant collective farms (the FACs).[18] The peasants, according to official sources, did not have sufficient training to properly integrate the use of these tractors on the FACs. As a result, many of these tractors have now broken down or are no longer in the service for which they were intended. This inappropriate use of scarce capital equipment was apparently a major rationale behind the movement to establish FAPAs.[19] The FAPA collective farms are staffed by recent graduates of agricultural colleges, and it is hoped that their performance with scarce capital equipment will be better than the FAC peasants.

The problem with importing capital equipment for constructing dams, irrigation works, or other water resource construction is that proper staff may not exist at the level of the FAPAs or State Farms. Although there exist water resource personnel, they have only narrow training (two years, part-time) and almost no practical design or construction experience.

There do exist some real problems with water supply, sanitation, and water resources planning that AT interventions could address.

SNAPE-Related Projects

Two problems with rural water supply that have yet to be resolved are water transmission and storage. The typical living pattern in villages in the Fouta Djallon (at least) is

---

[18]From interviews with four Guinean staff of the Ministry of Information and Ideology, and Ministry of Agriculture, Water Forests, and FAPAs.

[19]Ibid.

that villages are on the crests of hills and water sources (rivers, springs, wells) are on the slopes or in the valleys below the village. This implies (even for the case of SNAPE-developed water sources) that people will walk a good deal to and from the water source.

Is it possible to construct a simple water transmission and storage system that would meet villagers' needs for water consumption and yet maintain the water source away from the village for washing functions? The following section is a proposal for the use of hydraulic rams and simple water storage devices for such improvements in rural water supply, a transmission/storage task that could easily be grafted onto the existing SNAPE program.

In the AT Exploration Team's review of Water sector activities in Guinea, the team observed that the SNAPE was the most productive organizational entity. SNAPE is developing on the order of 100 springs and 50 dug wells per year. The program's goal is to gradually extend water suplies to all needy rural communities in Guinea. SNAPE currently receives technical financial assistance from the European Economic Community (EEC) that, along with the Guinean contributions, supports work teams developing springs and dug wells in Middle and Upper Guinea.

UNICEF is beginning to contribute to SNAPE by supporting a hand pump purchase/installation program in Middle Guinea and a well drilling project in Upper Guinea.

USAID is considering a project that will assist SNAPE by financing a dry season vegetable garden project using high volume springs in Middle Guinea.

There are two ways that VITA could assist the SNAPE program in the near future:

- Provide technical assistance to staff of the proposed USAID vegetable irrigation project

- Assist with the identification of technical and financial aid to develop community water systems built around the successful spring development program.

As the potential for spring development in Middle and Upper Guinea has been discussed previously, this section will merely review the role of hydraulic rams and reinforced concrete structures as devices to boost and store a portion of the flow of springs being currently developed by SNAPE for village water supply.

SNAPE develops springs for community use that are usually several hundred meters from the location of the users. Villagers must climb down substantial distances at a rather steep incline (from personal observation) to get water and then bring it back up for personal hygiene and cooking purposes (clothes can be washed at the site). Women of the villages do not appear to mind this arrangement. However, an argument could be made that much time and labor could be saved if the springs could be integrated into a more complete village water supply system.

The first problem is how to move water up a hill without resorting to manual or animal labor, diesel pumps, or other capital or labor intensive devices. Many spring sites in the Fouta Djallon are ideal for using hydraulic rams. As illustrated in Figure 27, (see page 90) a nearly continuous source of water exists in the form of a natural spring developed for potable water supply by SNAPE. The springs are midway down a hill and the villagers live on the hill crest. It is possible to place a ram at some distance below the spring source, so as to create a potential "head" from the fall from source to ram. This ram could pump a portion of the water up to the village, allowing the rest for use in washing, irrigation, or other site-specific activities.

A second problem is water storage. The water would be rammed continuously up to the village. To conserve water, it would be desirable to assemble or build a water tank to be used to store water during times when use is low. Such tanks could be constructed locally using reinforced cement mortar, concrete, or the ubiquitous 55-gallon drum. Reinforced cement (a mixture of sand, cement, and chicken wire) is routinely used in well construction by the existing SNAPE work teams. The tanks could be precast using corrugated galvanized iron forms (as the SNAPE teams currently precast well reinforcements) or constructed on-site by the work teams.

From the storage area the water could be distributed to a village standpipe, a network of pipes, to individual homes, or even to a simple solar water heating system using 55-gallon drums painted black (see Figure 28).

Three coordinated work teams could be developed and function in a manner comparable to existing SNAPE work teams. One team would adapt hydraulic rams for use in Middle Guinea villages. A second team would build or precast and assemble water tanks and/or the solar heating systems. The third team would travel from village to village with a regular schedule to assist villagers in the maintenance and repair of the various devices.

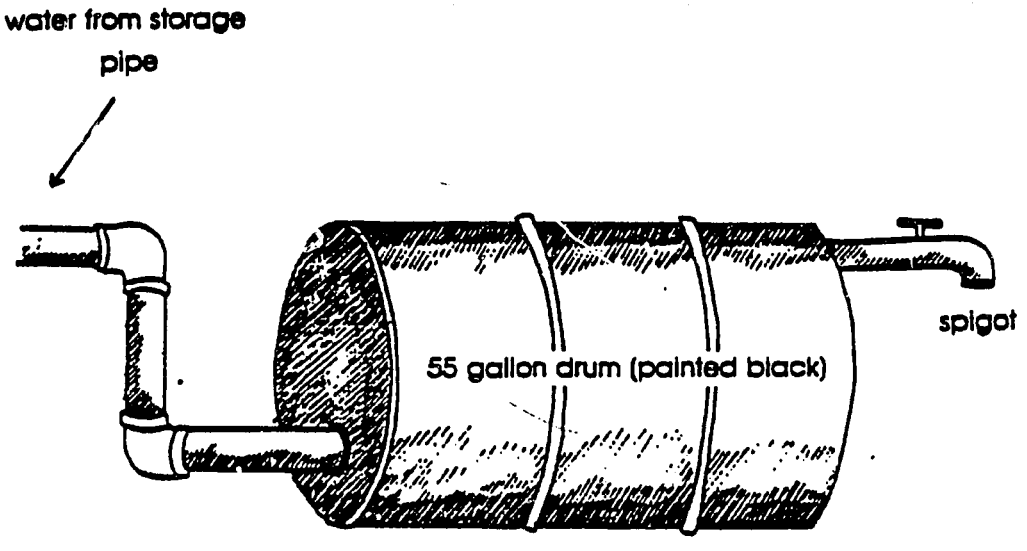

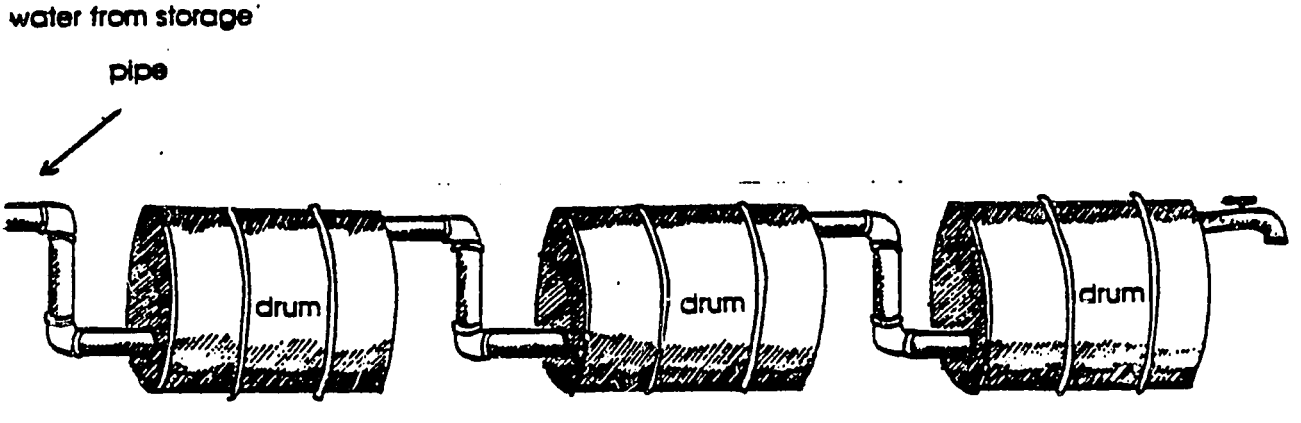

Figure 28. Solar Water Heater--55-Gallon Drum

USAID is considering an irrigation project that would utilize the excess flow at some spring sites for dry season irrigation for village vegetable production. Some technical assistance would be needed in this effort; for example, in the construction of small-scale irrigation utilizing gravity flow open channels, in the absence of large earth moving equipment. Another person, preferably a woman agronomist, could assist in the selection, planting, cultivation, and harvesting of the vegetables. Such an advisor would be important up until the time that the dry season cultivation (by women) would have demonstrated itself to be a productive use of time for villagers.

Water Resource Planning Projects

There exist a large number of donor organizations, whether international (WHO, UNICEF), multinational (EEC, Comecon), or bilateral (France, Italy, USSR, East Germany, USAID, etc.) that have been and are willing to invest substantial sums in capital intensive water-related projects in Guinea. Guinea's problem is not so much the availability of donors but rather the development of appropriate high impact water resource projects in which donors can invest. The team observed a number of reports developed by expatriates that identify possible projects, but very few that describe such projects in enough detail so that a donor would have an incentive to invest. As the Minister of Information and Ideology mentioned to the team, "There is a need for training cadres in water resource planning methods." When cadres throughout the country can document the costs and benefits that would accrue from making capital investments in the water sector, it will be easier to encourage such support by donor agencies in more detail. A proposal for technical assistance in water resource planning follows.

During the last week of the team's stay in Guinea, the Minister of Information and Ideology requested that the team respond to a number of specific project suggestions. The principle water-related topics he and his staff mentioned included (a) technical assistance for water resources planning, and (b) training in these techniques for technical college students.

In order for the Government of Guinea to be able to justify funds for water resource development from international assistance agencies, the cadres need to be able to develop specific proposals that identify projects and quantify some of the variables, including:

- The volume, timing, variability, and quality of water from a particular source.

- The nature, volume, timing, and variability of water demands for some purposes.

- The capital, operating, maintenance, and repair costs for specific water-related facilities.

- The nature, likelihood, and quantity of economic and quality of life benefits resulting from a proposed project.

The Ditinn water projects description, which immediately follows this section, is an example of such a preliminary effort at project identification. Practicing water resource engineers in many nations have developed what might be termed as "quick and clean" methods to quantify water supplies, demands, cost, and pictorial guides that can be used for specific water project planning purposes.

VITA also proposes that a practical professional engineer be engaged to go to Guinea to develop French-language manuals for the four functions described above. Such documents would primarily be composed of tables and figures that will allow cadres to identify rapidly and simply information concerning water supplies, demands, benefits, and costs, given the minimum possible reliance on environmental measurements or cost quotations from vendors. Such planning documents would be used for the purpose of identifying and quantifying attributes of potential projects, rather than for prefeasibility or feasibility design.

The person selected could be assigned to develop these documents under the supervision and with the assistance of a group composed of a number of ministerial representatives, including staff from the Hydrology, Meteorology, DEG, SNAPE, and Ministry of Health offices. The person should be engaged both to develop manuals and to demonstrate their application and utility in Guinea by having a number of persons (in technical universities, a FAPA, a State Farm, or the Ministries) develop an identification document for some projects that the government would like to propose for funding to an international assistance organization.

It would be useful for the person selected for this task to have experience in West Africa, have four or more years of experience utilizing quick and simple water project design criteria, and have fluency in French.

Water Projects in the Ditinn Area

If the Government of Guinea is committed to seeking funds only for capital projects, they should do so in a way that

maximizes the likelihood of successful, appropriate technology adaptation. Experience in many developing nations has indicated that the likelihood of success of development projects is enhanced if:

- The project is given special status.
- It involves a comprehensive multisector effort to improve life in a region.
- It is targeted into an area with the proper natural and human resources.

The following is an example of this type of targeted multisector development. See also the Energy sector report. The area of Ditinn, which contains a state research farm, a FAPA, and three villages, has been chosen to illustrate the approach.

The Ditinn River is part of the Tene River watershed. The estimated combined flow at the juncture of the Ditinn and Tene rivers in various months of the year appears in Table 11.

Month	Average Flow (in m^3 per second)
January	4.9
February	2.8
March	1.4
April	0.7
May	0.5
June	2.6
July	9.1
August	33.3
September	45.2
October	46.4
November	23.8
December	8.4

Table 11. Estimated Monthly Flows of the Tene River

Assuming 30.4 days per average month and the flows of Table 11 the approximate total annual flow of the Tene River watershed as measured below Ditinn is 465 million cubic meters per year.

The three principle uses of water in the Ditinn/Tene River watershed are for human consumption, animal consumption, and crop irrigation. If we assume a total human and animal population of 3500 persons and 500 beasts, with consumption of 20 liters per person/animal per day over the year,[20] the total water supply demand amounts to approximately 30,000 cubic meters per year. During the dry season, the water supply demands would amount to 78 cubic meters per day. Assume that irrigated agriculture would use on the order of 100 cubic meters per day per hectare, which would imply the flooding of that hectare with a layer of water one centimeter in depth, to be dissipated through evaporation, percolation, and consumption by plants.

These flow figures are calculated by assuming that the pattern of flows in the Tene River watershed (as measured at the junction of the Ditinn and Tene Rivers) is comparable to the pattern of flows in the Tinkisso River watershed (as measured at Dabola). These two watersheds are close to one another and are both on the eastern side of the Fouta Djallon. Given the flows in the Tinkisso River (known) and the relative size and precipitation patterns in the Tinkisso and Tene River watersheds (known), it is possible to calculate flows in the Tene immediately below Ditinn according to the equation:[21]

$$\text{average flow in Tinkisso watershed in a given month} \times \frac{\text{size of Téné basin}}{\text{size of Tinkisso watershed}} \times \frac{\text{average rainfall in Téné watershed}}{\text{average rainfall in Tinkisso watershed}} = \text{average flow in Téné river watershed in a given month}$$

---

[20]The total village population is approximately 3,000 persons, according to a water engineer at the Ditinn State Farm. We observed approximately 40 professionals at the State Farm and estimate that there may be 30 professionals at the FAPA close to Ditinn. Assuming 5 persons per professional, the State Farm and FAPA communities would add approximately 350 persons to the population. The total is rounded off to 3500. The rate of human water consumption for all communities is estimated at 20 liters per person per day throughout the year. The animal consumption is estimated as 40 liters per animal for the six dry months of the year. According to one of the chief officials at the Ditinn State Farm, here are in fact 200 animals that they hope to raise to 500 head. The number of cattle and other animals at the FAPA and in the villages is not known. Thus, we have estimated the total animal population as 500 head.

Figure 29 is an illustration of the settlement pattern in the valley, based upon comments made by State Farm personnel. To raise 100 cubic meters per day by an average of 30 meters (for water supply) would require on the order of 20-kWh, allowing for pumping efficiencies of about 40%. A 3-kW motor running eight hours a day would provide sufficient energy for water supply purposes.

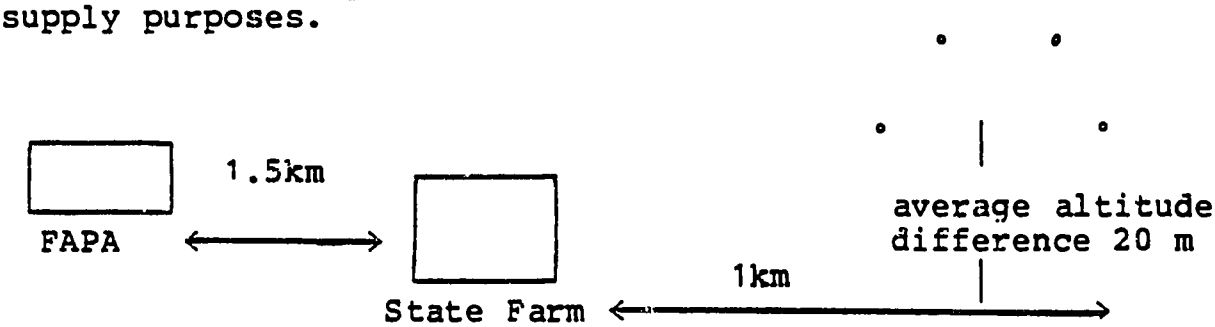

Figure 29. A Representation of Ditinn Settlements

No information was available to the team concerning the topography of the agricultural areas in the Ditinn valley. It would require an installed capacity of about 104-kW to pump 21,500 cubic meters of water up a gradient of 20 meters, assuming about 50% pumping efficiency.

Another alternative would be to construct a dam above the Ditinn River waterfall primarily for power generation purposes. The flow of the Ditinn River alone during the dry season is estimated as 0.18 cubic meters per second, or about 15,500 cubic meters per day. Assuming the design parameters proposed (an installed power capacity 24 hours per day throughout the year), it would be possible to power the motor for pumping water for domestic and animal water supply. As the Ditinn River below the falls is substantially above the valley agricultural land, it might be possible to construct an open channel irrigation canal to convey 15,000 cubic meters per day

---

[21]Average flows in the Tinkisso River watershed were obtained from Le Service National de l'Hydraulique in a report Mission Microcentrales, Baden, Suisse: Motor-Columbus, S.A., 1965. These figures represent average flows over three years (the actual years are not cited). The size of the Tinkisso and Tene River watersheds were obtained from Mission Microcentrales and the report Annuaire Hydraulique, 1971, Baden, Suisse: Motor-Columbus, S.A., 1972. The precipitation estimates were derived from the Annuaire Hydraulogique, 1971.

to crops primarily through gravity flow. There would also be sufficient power for any minor water lifting associated with such a system.

These conceptual water supply systems are clearly meant to be illustrative, and are limited by the absence of any real data and the necessity for many unsubstantiated assumptions. A more meaningful water supply design would be based upon topographical, meteorological, human settlement, and other factors that could be determined only by spending time at the Ditinn site.

Detailed cost and benefit calculations are not justified at this time due to the schematic nature of these illustrative projects. However, it may be worthwhile to indicate that such water resource interventions could affect the economy and life-style of the Ditinn region. This section will consider only the water-related aspects, leaving to other subsections the discussion of the energy, agronomy, and nutritional implications of projects.

The Energy sector report considers the costs of installing a hydropower station and dam at the Ditinn River falls. It would not be productive even to speculate on the question of costs for the water supply or irrigation works systems here, as such costs will primarily reflect local topography and the propinquity between the source of supply and the site of end use, subjects for which specific data are not available.

One of the benefits of the irrigation system would be the capacity to produce a crop during the dry season. Imagine that corn is produced as a grain for human or animal consumption. American yields are on the order of 6,000kg per hectare for irrigated, fertilized fields with good soil fertility. Assume one-half of the yield, or 3,000kg corn production per hectare. Production on the 154 acres available for irrigation due to water storage in the above-falls dam would yield about 460 metric tons of corn per six-month dry season. This volume represents about one percent of the total annual production of corn in Guinea in 1972.[22] If consumption of corn in the Ditinn region is about 125kg per person per year, this 460 tons would roughly provide the grain needs of all the 3,500 people in the valley. At prices of US$4 per bushel (or 16 cents per kilogram), the value of the crop is about US$75,000.

---

[22]Nelson, Harold D., Area Handbook for Guinea (Washington, D.C.: U.S. Government Printing Office), 1975, p. 253.

The major benefits of a treated water supply for the 3000 villagers in three villages who currently walk to the Ditinn river for water would be improved health through reduced exposure to water-transmissable diseases contacted via the polluted river water. Even an untreated system of water supply in the villages would save the villagers a substantial amount of time for uses other than hauling water. Assume for an average family size of six that one woman per family makes two trips per day to the Ditinn river from an average distance of 500 meters.[23]

Further allow that it takes 20 minutes more to make a round trip to the river than it would take to draw water from a village standpipe system. From this crudest of estimates (no real information is available on village water use patterns, how they would change with a standpipe system, or even the relative sites of the villages), each woman who currently goes to the river would be able to use 30 eight-hour days (about 243 person hours per year) for other productive activities.

If for some reason the hydroelectric project was not pursued, it would be possible to improve the standard of living of the villagers in the Ditinn area through construction of wells. As mentioned previously, there are three villages with a total population on the order of 3,000 persons who draw their water for domestic purposes from the Ditinn River. To reach the River they must walk anywhere from 400 to 2,000 meters round trip. The most distant village is on the order of 1km from the river.

Although there are local well drillers in the region, no wells exist in the villages near Ditinn because the level of static water during the dry season is 20 meters or more below the surface.[24] The most distant village would not appear to meet the criteria for priority well construction established by SNAPE.[25]

---

[23]Interview with water engineer Thierno Abdoulaye Sow of the Ditinn State Farm, November 1980.

[24]Ibid.

[25]Vailleux, Y. "Etudes Sectorielle d'Approvisionnement en Eau Potable et d'Assainissement, Secteur Rural," (Washington, D.C.: Programme Cooperatif Organization Mondiale de la Sante et Banque Mondiale), April 1980.

Based on recent well drilling experience in the Fouta Djallon area, the expected cost per meter of well is on the order of 3,700-4,700 French francs per meter, where all expenses (both imported and local costs) are expressed in terms of French francs.[26] Thus the cost of a well, assuming 25 meters depth and 4,700 FF per meter, would be on the order of 117,500 French francs. The well developed work would be accomplished by one of the SNAPE work teams.

---

[26]Interview with a BURGEAP engineer, in Conakry, November 1980.

VI. FOOD AND NUTRITION SECTOR REPORT

SECTOR OVERVIEW

Background

The Republic of Guinea has a variety of favorable climates and good soils that allow for a diversity of rainfed crop production in most of the country. Abundant rivers and streams in most of the country enable fishing as well as provide water for irrigation, and good pasture lands allow for cattle raising. Food production consists of cereals (rice, maize, sorghum, millet, fonio), tubers (cassava, yams, sweet potatoes), fruits (bananas, pineapple, citrus, mangoes), vegetables, coconut, palm kernels, and cocoa.

Crop yield, however, is lagging and consumption of staple grains, such as rice, exceeds domestic production. For example, even though a 30% increase in total food production took place in the past two decades (see Table 12), yearly rice yields range only from 0.7 to 1.0 tons per hectare compared with several tons per hectare in neighboring countries.

Between 1975 and 1979 this situation resulted in an average net import (consumption minus production) of 54,000 metric tons per year of milled rice, wheat, and coarse grains (see Table 13).

To further complicate this predicament of low food production and high food importation, it should be noted that the nutritional needs, in terms of adequate caloric intake, of the Guinean population are not being met (see Table 14). If Guinea did import the amount of grain that would provide the recommended minimum caloric intake, an additional 208,000 metric tons would have to be imported (see Table 15) (if variability of food supply, skewed distribution, and leakage from the open market are considered, this level could reach 530,000 metric tons).

Although no national nutrition survey has been completed, observations by the team members and reports of physicians suggest that indeed there is serious malnutrition in the country. Reports on Guinea presented at a 1968 conference in Dakar indicated that protein-energy malnutrition was frequently observed on weaning caused by delayed introduction of foods to supplement breast milk and the use of rice and corn products of low nutritional value.

	1961-65	1970	1971	1972	1973	1974	1975	1976	1977	1978
Central and W. Africa	100	126	128	128	128	135	140	131	135	137
Guinea	100	122	128	130	132	131	133	132	125	134
Guinea-Bissau	NA	NA	NA	NA	NA	NA	NA	NA	NA	NA
Senegal	100	76	110	76	91	125	141	125	88	122
Mali	100	102	97	82	82	81	92	112	110	114
Liberia	100	100	106	109	122	140	135	143	148	155
Sierra Leone	100	108	118	118	119	118	126	128	136	138

Source: "Report Assessing Global Food Production and Needs as of April 15, 1979, U.S.D.A. Statistics and Cooperatives Service.

Table 12. Indices of Food Production (1961-65 = 100)

	1969/70-1972/73			1975-1976			1976-1977			1977-1978			1978-1979		
	Prod.	Cons.	Net Imp.	Prod.	Con.	Net Imp.	Prod.	Cons.	Net Imp.	Prod.	Cons.	Net Imp.	Prod.	Cons.	Net Imp.
Central and West Africa	12,367	13,825	1,496	13,047	14,649	1,655	13,053	15,249	2,287	13,008	15,515	2,600	13,873	16,373	2,655
Guinea	312	359	49	340	407	49	340	411	72	340	379	40	340	405	55
Guinea-Bissau	---	---	---	---	---	---	---	---	---	---	---	---	---	---	---
Senegal	640	916	302	747	999	306	676	1075	440	490	1030	450	698	1143	450
Mali	907	919	12	845	873	18	872	882	10	866	876	10	871	881	10
Liberia	100	143	43	160	207	37	170	215	55	473	218	55	195	235	35
Sierra Leone	290	341	54	335	364	40	355	398	35	367	400	35	361	410	55

*Includes wheat, coarse grains, and milled rice.

Source: "Report Assessing Global Food Production and Needs as of April 15, 1979," U.S.D.A. Statistics and Cooperatives Services.

Table 13. Total Grain Production, Consumption, and Net Imports* (in 1,000 metric tons)

	Recommended Calorie Intake Minimum	Per capita Caloric Food Supplies Averages 1961-65	1971-75	1976-78	1961-78 Compound Ann. Growth Rate %	Inter-Ann. Variation	1976/77 Intake % Rec. Minimum
	Calories per Capita per day						
Central & W. Africa	2320	2105	2130	2095	0	2.9	90
Guinea	2310	1910	2010	1920	+0.2	2.8	83
Guinea-Bissau	2310	2115	2315	NA	+1.0	1.5	100
Senegal	2330	2150	2280	2505	+1.0	7.0	(108)
Mali	2350	2025	1810	1780	-1.1	5.0	76
Liberia	2310	1945	2010	2230	+0.8	4.2	97
Sierra Leone	2300	2020	2245	2220	+0.6	4.8	97

Source: "Report Assessing Global Food Production and Needs as of April 15, 1979, U.S.D.A. Statistics and Cooperatives Services.

Table 14. Per Capita Caloric Food Supply Data

	Recommended Minimum Minus per Capita supply		Adjusted for Inter-Annual Variability		Adjusted for skewed food supply distribution		Adjusted for Maximum open market leakage		85% Minimum Minus Per Capita Food Supply	
	Kg/cap	1,000 MT	Kg/cap	1,000 MT	Kg/cap	1,000 MT	Kg/cap	1,000 MT	Kg/cap	1,000 MT
Central and W. Africa	35	5,498	41	6,511	83	13,027	103	16,202	24	3,791
Guinea	45	208	51	236	94	434	114	530	32	147
Guinea-Bissau	(1)	(0)	3	2	45	25	66	36	(16)	(9)
Senegal	(20)	(106)	(2)	(9)	43	226	65	343	(22)	(115)
Mali	66	387	77	452	121	711	143	837	57	336
Liberia	9	16	19	33	62	109	83	146	0	(1)
Sierra Leone	10	30	22	69	65	205	87	272	(1)	(3)

Source: "Report Assessing Global Food Production and Needs as of April 15, 1979, U.S.D.A. Statistics and Cooperatives Services.

Table 15. Measures of Unmet Average 1976-78 food Needs in Wheat Equivalents

If extrapolation from data on nutritional status in a neighboring country is valid,[1] anemia in children is a problem of considerable magnitude. Diets deficient in bio-available forms of iron are major cause of anemia.

National food consumption appraisals show that families in urban areas with low purchasing power or many children consume protein-rich foods only periodically and their total calorie intake is closely related to income. Their inadequate calorie intake is often accompanied by deficits in vitamin, mineral, and protein consumption.

In rural areas, less variety in the diet is attributable to socio-economic conditions. It is easier to provide vegetable and animal products from the family farm to complement the cereal staple, with milk, meat, fish, and chicken consumed directly by the producers.

Undernutrition is intensified by certain feeding practices and taboos and by between meal snacks for children that are based on what is thought to taste good rather than on what they need. In some urban areas artificial feeding may have been mistakenly introduced as a more healthy alternative to breast feeding, with little attention being given to proper preparation of the food.

In general, the Guineans have two major meals a day, at noon and evening. Each meal consists of a cereal-based dish (rice, fonio, corn, millet, sorghum) or a starchy root (cassava, yam, sweet potatoes, or plantain).

A sauce to complement the cereal-based dish is prepared from a variety of plants, such as cassava, sweet potato and other leaves, tomatoes, herbs and spices. The composition varies according to region and economic situation. Small amounts of fish, poultry, and meat may also be put in the sauce. Citrus fruits, bananas, and pineapples are consumed fresh.

Resources

Agriculture Labor Force

Guinea, like all its neighbors, has an agricultural economy; nearly 80% of its population is engaged in farming and other rural sector activities.

---

[1] Sierra Leone National Nutrition survey. School of Public Health, University of California and Agency for International Development, 1978.

Principle Food Crops

Major cereal crops, listed in order of decreasing production and consumption, are: rice, corn, fonio (Digitaria spp.), and sorghum. Major root and tuber crops are cassava, yam, taro, and sweet potatoes. Other fruits are bananas, coconut, oranges, mangoes, and pineapple.

Livestock

Based on limited observations and communication with local authorities, there are more than 3 million cattle in the country. They are generally classified into two major groups:

- The Krasnaya breed, which are dairy cows imported from the USSR and which are well adapted to Middle Guinea in Dalaba.

- The N'Dama breed, which is robust, strong, and may make a good draft animal, but which does not have a satisfactory lactation period or milk production.

Other livestock in order of decreasing importance include sheep, goats, and pigs. Chickens and ducks are raised almost everywhere, and the team was told that there are a few modern chicken farms in Conakry, Kindia, and Mamou. The team was unable to visit these sites.

Fish and Fish Products

Fish are found in the coastal zone and all over Upper Guinea. In Conakry, fish of all kinds are sold in the market. In Middle Guinea where fish consumption is low, there is a small amount of fishing activity in inland lakes, rivers, and ponds. Dried and smoked fish products are sold in the market in many locations, and are consumed by those who can afford to purchase them.

With the exception of rice (the basic staple), which is consumed all year round, all other crops are seasonal; cereals are harvested from November to March; fruits and vegetables, according to the variety, can be found fresh in all seasons.

Food Industries

There are several small-scale food industries for canning and oil extraction throughout the country. The team visited a pineapple juice canning factory (a joint Libyan-Guinean

enterprise), a soft drink bottling plant, a honey production plant built entirely with modern French equipment, and a modern bakery for the production of bread.

Salt is extracted from sea water Major evaporation sites are located in the coastal zone south of Conakry.

The team did not have the opportunity to observe traditional techniques and methods of food handling and processing other than the pounding of grain.

ISSUES AND INSTITUTIONS

The team observed several major governmental organizations that could play important roles at the community, regional, and national levels in food and nutrition activities throughout the country.

The Ministries of Information, Social Affairs, and Public Health informed the team that an Institut National de Nutrition (National Institute of Nutrition) will be established in 1983 or 1984. Such an institute would be instrumental in effecting food and nutrition research and project implementation.

Centres de Promotion Feminines (CPFs) under the Ministry of Health and Social Affairs are present in practically every village. These centers could teach basic skills and new techniques in home economics (cooking, food sanitation, nutrition), gardening, and food processing--tasks that are usually carried out by women.

The Ministry of Agriculture (Ministere de l'Agriculture, des Eaux, et Forets et des FAPAs) could also carry out food and nutrition activities. The FAPAs were established to carry out research as well as to demonstrate intensive crop and livestock production techniques and to provide extension services to the small farmer. FACs (Fermes Agricoles Communales) may also be used as demonstration sites, particularly at the village level.

The Centre National de Productivite, a part of the Ministry of the Information and Ideology, trains production and management personnel, assists in the creation and management of new enterprises including socioeconomic and other feasibility studies, and analyzes technical problems. CNP may be used to disseminate appropriate technologies for food processing.

Food Loss Reduction

Great gains can be made in food availability by reducing food losses. Estimates of known cereal losses to insects, mold, and rodents in stored grain in the Ivory Coast and Sierra Leone range from 10 to 20%. Further losses are thought to occur during threshing, winnowing, parboiling, milling, and marketing. A particular problem occurs in drying cereals to the 10-12% moisture content that is necessary for long-term storage and in maintaining the dryers.[2]

Although the team was not able to examine the entire grain, root, or fruit-vegetable postharvest system, casual observations of centralized storage (grains were unprotected against consumption by rodents and domestic animals), rice drying (left unprotected from birds and insects), and marketing (meat and vegetables were covered with flies) indicate that numerous simple improvements to reduce food losses should be introduced. It would be necessary to make a qualitative assessment of the site and magnitude of loss in order to determine which of the numerous innovations would be most cost-effective and acceptable. (See the Agriculture sector report recommendations on grain storage.)

Food Waste Recovery

As mentioned in the Energy sector report, pineapple wastes and other food processing wastes are available from central processing facilities. A close examination of the trade-offs between using these for ethanol, yeast, or yeast-fortified feed products should be made. The personnel resources and capital investment will vary with the decision as will the value of the product to Guinea.

Food Preservation

Traditional food preservation techniques in West Africa consist primarily of drying in combination with smoke curing (fish), fermentation (cassava), and salting (fish, meat). As described earlier, drying is usually done on uncovered surfaces and is subject to unexpected rainfall and predation by animals.

---

[2] Tropical Products Institute Seminars on Post-Harvest Grain Losses, Tropical Stored Products Information No. 36, 1978.

In some parts of Africa fermented dairy products (acidified milk) are an acceptable way of increasing the shelf life of dairy products. It is likely that milk consumed in rural Guinea is processed in this manner. There are precautions that should be followed to ensure the safety of the products that could then make it a more appropriate weaning food for children (careful cleaning of containers, proper temperature for inoculation of the culture, protection of the culture from contamination by unsuitable bacterial strains). Small-scale village industries could be established to prepare more uniform products in regions where Krasnaya cattle are raised.

Improving the Quality of the Diet

Protein deficiency has been identified as a specific nutrition problem, particularly for children between 6 and 23 months (the weaning period). Few children receive adequate supplementary foods at this age. It is necessary for children to have a source of protein-rich foods in addition to breast milk. A combination of vegetable protein (beans, seeds, or nuts) and animal protein (mainly fish) would meet this need. In addition, children should be provided with an adequate intake of dark leafy green vegetables to provide the essential vitamins and minerals that would ensure, in conjunction with adequate protein intake, healthy growth.

AT INVENTORY

Traditional technologies in use in Guinea in the food sector vary greatly from region to region. While the AT Exploration Team was unable to view many of the technologies in use firsthand, it is known that country-wide the following traditional methods of food processing, preparation, storage, and tools are in use:

- Fiber baskets for food storage
- Mortar and pestle for grain grinding
- Sun drying of food
- Three-stone cookers and other kinds of stoves

RECOMMENDATIONS

Fish Farming

In order to increase the country's supply of fish, especially to inland areas where there are few rivers and streams, so

that sources of protein are more available to the rural population, fresh water pond fish raising is recommended.

With relatively modest inputs, carp yields of from 10,000 to even 20,000kg per hectare have been reported in Chinese aquaculture communes.[3] Combinations of aquatic animal with land animal husbandry, with paddy rice crops (a traditional Southeastern Asia technique) or in conjunction with development of dams recommended in the Energy sector report, are also possible and should be pursued in Guinea. Aquaculture is currently the subject of research and extension services in many countries.

Growing fish in ponds allows feeding, breeding, growing, and harvesting in a well-planned way. The FAPAs would be an ideal organization to manage use of resources so as to optimize production. VITA has a manual on freshwater fish pond culture and management that provides basic information on the planning and management of fish ponds.

In addition, more technical, specialized publications are available from the VITA Documentation Center.

Solar Food Drying

While it is known that sun drying of grains and other foods is extensively done throughout Guinea, an inventory of current techniques and foods dried was not compiled. The team cannot, therefore, identify particular problems that may exist, nor recommend specific technologies to address those problems.

Solar grain dryers have been found to be attractive alternatives to traditional drying methods, especially where seasonal rainfall often disrupts the traditional sun drying process. Solar dryers are important in minimizing food losses due to post harvest infestation, and in ensuring adequate drying and timely delivery of produce to markets.

One simple solar food dryer (which can be used for grain, fruit, vegetables, or fish) is a rectangular box, made from bamboo or wood, which is plastered with mud and covered with a thin sheet of plastic. The interior of the box is painted black. In choosing a design for testing, consideration should be given to the temperature obtained, speed of drying,

---

[3] Supporting Papers: World Food and Nutrition Study, National Academy of Sciences, 1977, p. 290.

protection from dust and dirt, protection from rain, and vulnerability to infestation by animals or insects. Two VITA designs (see Figures 30 and 31) for drying 18 to 24kg of grain, fruits, fish, or vegetables per day are included in the reference packet accompanying this report.

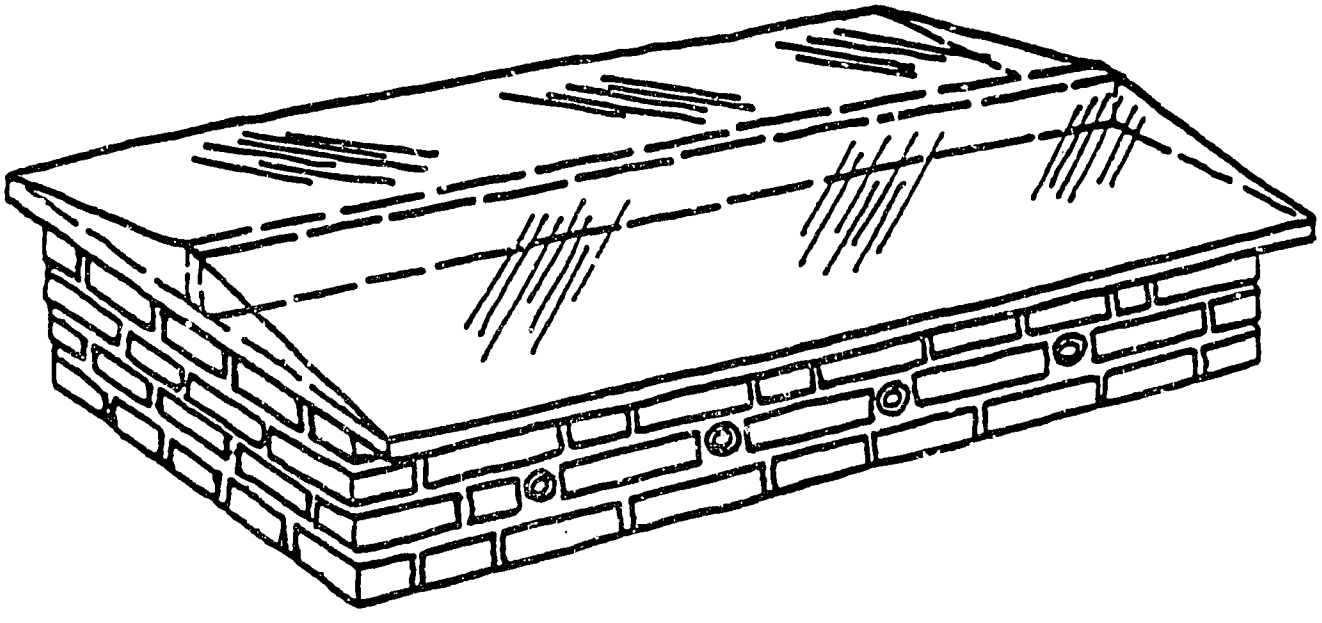

Figure 30. Stationary Solar Grain Dryer

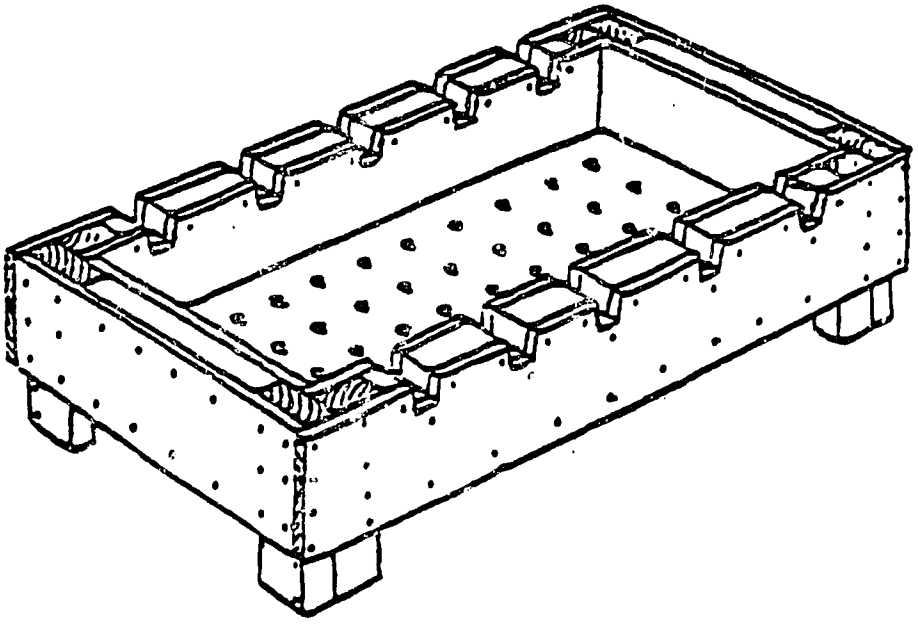

Figure 31. Portable Solar Grain Dryer

In addition to solar dryers, VITA has designs for dryers that use charcoal or wood heated air to dry the food. One device consists of a mud block or metal-sheet bin with drying trays of wire netting. A metal sheet with holes in it is placed between the food tray above and the fire below, thus providing uniform heat and preventing scorching. After drying, the food is stored in containers such as jars, pottery, or gourds.

Grain Mills

Traditional grain processing is an extremely time-consuming, labor-intensive activity. There is an opportunity cost associated with other activities, or even earnings foregone on account of the time spent dehulling and pounding grain. Consideration should be given to whether the time spent in traditional methods can be better spent in other household or income-earning activities, such as in market gardening, raising poultry, in handicrafts, etc. In addition, the shelf life of flour produced in grain mills is far greater than in the traditional, wet-milling process.

A variety of grains are milled in Guinea: rice and plantain in Lower Guinea, maize in Middle Guinea, and millet and sorghum in Upper Guinea. A grain mill design that can be adapted for use in the household, village, or FAPA is included in the reference packet accompanying this report. This mill is made mostly from wood; it can be powered by hand, wind power, or by a 1/4hp electric motor. Prototypes incorporating these power-source options could be developed at the facility at Foulaya and then disseminated by the CPFs to individuals or to FAPAs, as appropriate.

Coconut Grater

In Guinea, use of coconut varies somewhat regionally, but is most plentiful in Lower Guinea.

The nut, when green, contains about half a liter of water or juice, which, apart from a little calcium and carbohydrate, is not very nutritious. The white flesh is rich in fat. When sun dried, it is called copra. The oil from the copra is used both for cooking and soap making. Copra itself is used as an addition to many nutritious dishes.

A simple, pedal-powered grater for the production of copra has been developed by the Tropical Products Institute in London for use in Africa (see Figure 32), which could be used in the villages or FAPAs in Lower Guinea where coconuts are most plentiful. The grated coconut could then be consumed as is, or

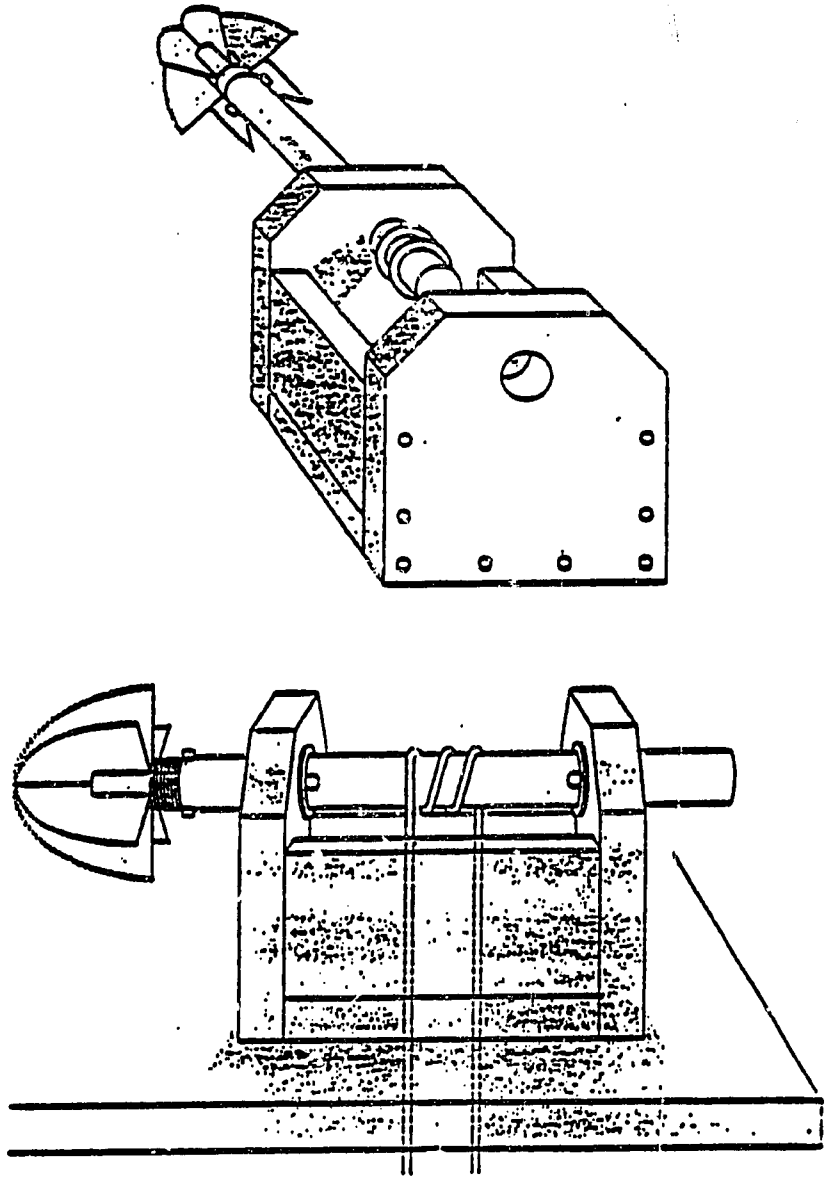

Figure 32. Coconut Grater

pressed to remove coconut oil for cooking, adding much needed calories to the diet. The pressed cake could be dried and used as cattle feed.

Improved Oil Extraction

The oil from palm nuts, peanuts, karite nuts, and cottonseed is valued in Guinea; and traditional means of oil extraction,

while time consuming, may well present the most efficient method for small-scale production. For this particular technology new methods have to be examined closely relative to cost and time expended in traditional methods. Experience has shown that the degree of improvement possible will vary, with some methods showing dramatic increases in efficiency over traditional practices, and other processes none or even lower overall efficiency. In addition, it is important to view the whole process, not only the extraction itself. VITA has construction and process information on a wide variety of oil press designs and extraction methods including the screw press, lever press, hammer mill, and the hydraulic press (see Figures 33, 34, and 35).

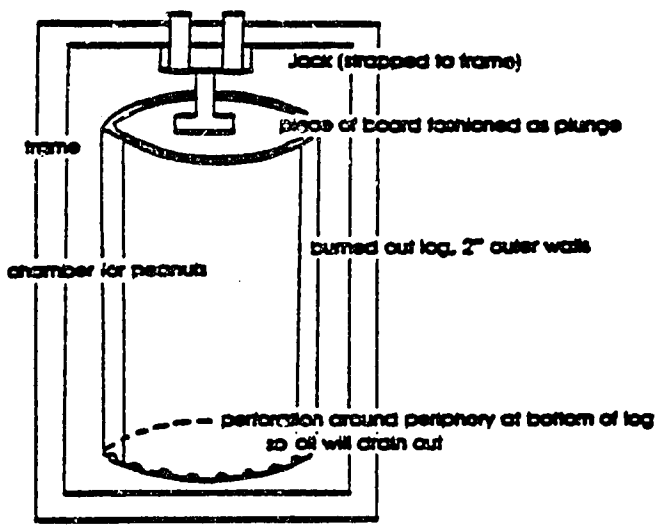

Figure 33. One Kind of Jack Oil Press

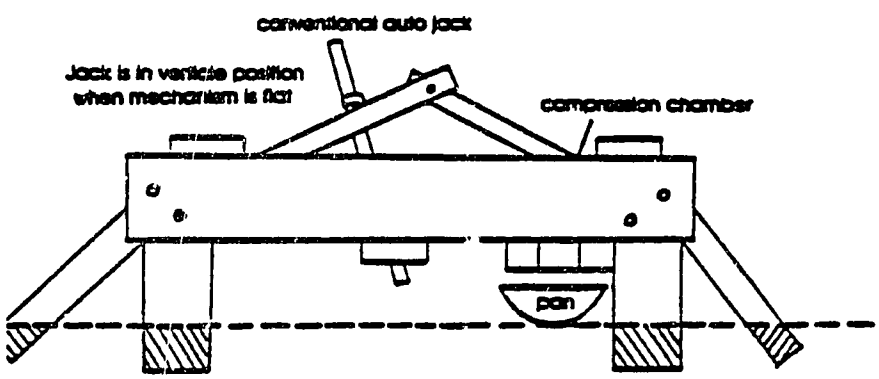

Figure 34. Another Kind of Jack Oil Press

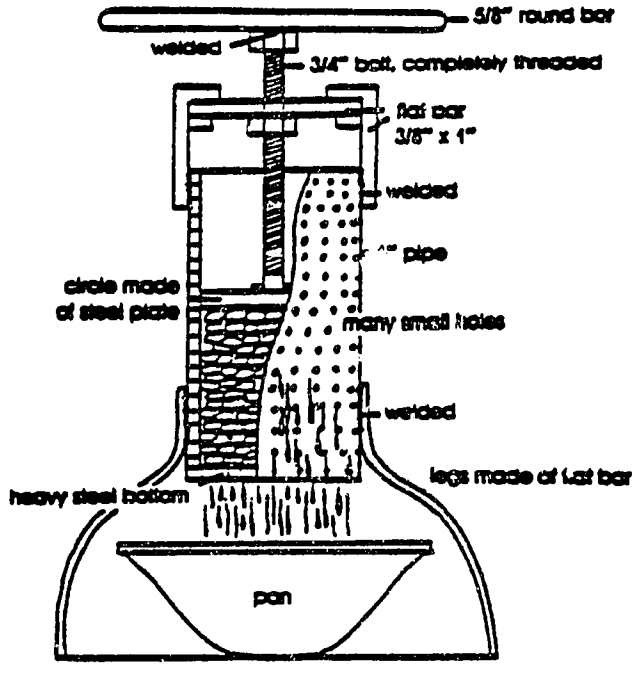

Figure 35. Screw Press

High-Nutrition, Low-Cost Food Technologies

Grain mills, texturizers, and extrusion cookers are widely used for the production of high nutrition blended foods and texturized vegetable protein. Using indigenous foods--mainly cereals and legumes--these machines mix or convert the raw materials into high-nutrition foods for those groups in the population that are vulnerable to undernutrition: infants, school-age children, and pregnant and lactating women. VITA can recommend small-scale grain mills that can be used both to process single grains and to blend mixes for weaning foods, such as the Bennmix baby food in Sierra Leone made from sesame, cowpeas, rice, sugar, and a vitamin supplement.

Low-cost extrusion cooking technology has been successfully applied to many countries, among which one example is the production of LISHA high-protein weaning food in Tanzania.[4] Extrusion cookers work by gelatinizing starches and expanding cereal grains. Any cereal can be used as a raw material if it

---

[4]"The National Milling Corporation LEC Plant and the Production of LISHA," V.M.K. Kepakepa, from Low-Cost Extrusion Cookers, Second International Workshop Proceedings, 1979, Tanzania, pp. 61-65.

has a moisture content of around 13% as a minimum.[5] In addition to weaning foods for infants, this technology can produce nutritious foods for mothers and school-age children that can be blended to suit the tastes of the groups for whom they are made, using indigenous foodstuffs. For example, blends used in other countries consist of wheat/soy, corn/soy/milk, barley/soybean/sesame, and corn/soybean/sesame.

Depending on the scale of operations, from small output capacities at the FAPA to larger capacity plants located in cities, VITA can recommend appropriate designs and literature. A village-level texturizer is pictured in Figure 36.

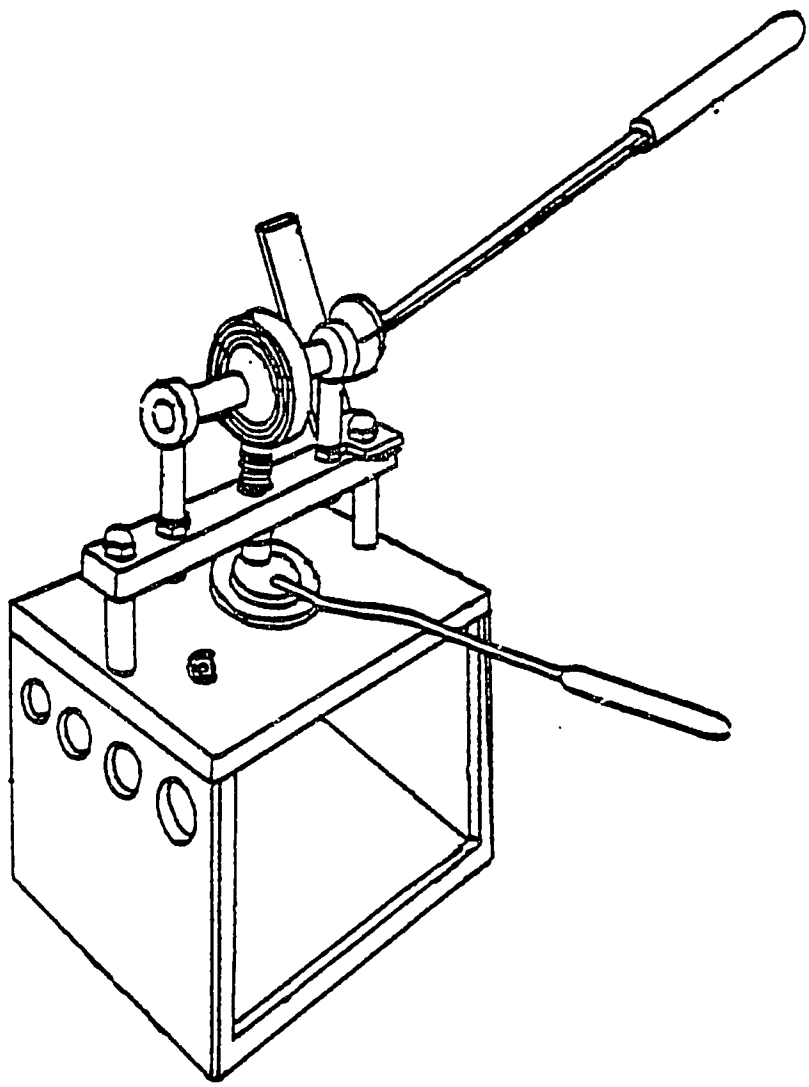

Figure 36. Village Texturizer

[5]Ibid., p. 115.

Bread Flour Mixtures

The use and development of composite flours should be encouraged. Flours made from a blend of wheat, rice, cassava, bean, and other starch flours grown locally would increase the protein levels of breads and decrease reliance on imported wheat flour, the supply and costs of which are subject to problems in transportation as well as to foreign exchange and trade constraints.

In Senegal, millet flour comprises 15% of the flour in wheat bread, and efforts are underway to make bread that consists of 30% millet flour.

Triticale flour, obtained from a man-made cereal, is commercially grown in North America and is currently being experimentally grown throughout the world. It is a hybrid of wheat and rye, carrying the best characteristics of both parents. Triticale flour can comprise 30% of the flour in wheat bread. It is high in nutritional value and has a high protein content. Composite flours could also be used as a carrier of inorganic iron so as to increase the dietary availability of iron, thereby aiding in the prevention and treatment of anemia.

The use of composite flours has been studied by institutes in Africa, such as the Institut de Technologie Alimentaire in Dakar, Senegal, and the Federal Institute of Industrial Research in Lagos, Nigeria.

Food-Loss Assessment Survey

The League for International Food Education (LIFE) has developed in collaboration with FAO and the Tropical Products Institute in London a methodology by which to identify the sources of food storage loss and measure its magnitude. The assessment is conducted by a team consisting of an entomologist, food economist, and sociologist. Since the assessment takes into consideration indigenous cultural features, the sociologist position may be provided by the host country. The assessment takes about five to six weeks to be conducted.

APPENDICES

A. Cooperative Agreement

B. VITA Model of the AT Transfer/Adaptation/ Diffusion/Acceptance Process

C. Guinean Government Institutions Contacted by the AT Exploration Team, by Sector

D. Bibliography of Materials in the Attached Reference Packet

APPENDIX A

COOPERATIVE AGREEMENT

Mr. Henry Norman, Executive Director, VITA (Volunteers in Technical Assistance), visited Guinea on July 8 and 9, 1980. He was received by His Excellency, Senainon Behanzin, Minister of Information, on behalf of the Minister of International Cooperation who was absent. Also present were Messrs. Ibrahima Diallo, Executive Director of the Center for National Productivity (CNP), and Oumar Tanou Sow from the State Secretariat for International Cooperation.

During the meeting, a basis for future cooperation between the People's Revolutionary Republic of Guinea and VITA emerged.

VITA is a nonprofit organization established in the United States to provide technical assistance to developing countries. VITA contributes to the development efforts of young states by financing small projects. Most of these projects are estimated by VITA to cost about US$10 to $20,000. VITA is particularly interested in renewable energy programs: solar energy, wind, biogas, hydro-energy. In this connection, VITA helps to establish information centers for the dissemination of technical information.

Project selection is governed by the following criteria:

- Efficiency: amount of energy saved or produced.
- Cost: capacity to finance recurrent costs after project completion.
- Usefulness: long-term reliability.
- Replicability: extent to which the projects can be replicated and adapted in other regions.

The scope of VITA's activities is quite extensive considering the number of priority areas for economic development which could benefit through these types of projects.

Thus VITA could consider possibilities for cooperation in:

- Renewable energy
- Water supply--irrigation

Previous Page Blank

- Agriculture
- Agro-pastoral State Farms (FAPAs)
- Nutrition

The following activities could be envisaged right away:

- At the level of the FAPAs:

  - Water supply: construction of microhydro dams for the irrigation of a number of hectares (perennial crops), to produce electricity for domestic and productive uses; and to provide running water for human and animal consumption.

  - Solar and wind energy: solar and wind renewable energy programs could be undertaken in Northeast Guinea. Such programs could have an economic as well as a technical impact on the FAPAs by turning them into centers of appropriate technology development.

  - Biogas: biogas production in villages (FAPAs) could bring about profound scientific and technical changes in the entire rural sector.

- At the scientific and technical information level:

  - VITA's documentation center holds some 75,000 pieces of technical information on subjects of interest to developing countries and related to small-scale technologies. In consideration of the importance of documentation centers in the promotion of science and technology, and in connection with the establishment of the Center for Economic, Scientific, and Technical Development (CID), a future data bank that would assemble and disseminate technical and scientific information, VITA would:

    - Make available to CID its extensive documentation.

    - Provide CID at the outset with technical assistance in information management.

    - Contribute to the training of CID staff for an efficient use of the Center's resources and to help develop interest for diverse aspects of economic and social development.

  - The Technology Division of CNP could benefit from assistance from VITA through exchange of information on equipment, methods of identification of local technologies, and the translation of these technologies into scientific language and subsequent promotion, as well as

the introduction of small-scale technologies and their adaptation. CNP could organize seminars with VITA on renewable energies, the promotion of endogenous technology and its introduction in the national economic life.

CNP wishes to subscribe to the VITA publications: "Energy Bulletin" and "Energy Fact Sheet."

It is obvious from the foregoing that a real basis exists for collaboration with VITA. In order to identify and prepare these projects for possible financing, VITA recommends that a mission visit Guinea as soon as possible. The duration of the mission will be about four to six weeks.

The executing agency for all these activities would be the State Secretariat in charge of International Cooperation.

Signatories of This Document

Ibrahima Diallo	O.T. Sow	Henry Norman
(CNP	(SECI)	(VITA)

Read and Approved

Senainon Behanzin, The Minister of Information

Conakry, July 9, 1980

(Translated from the French original document)

APPENDIX B

THE VITA MODEL OF THE AT TRANSFER/ADAPTATION/DIFFUSION/ACCEPTANCE PROCESS

VITA has developed a model for the AT transfer, adaptation, diffusion, and acceptance of appropriate technology (AT) based on its worldwide experience and a recent analysis of the AT process in forty countries.

In the VITA model, the process is set in motion by a recognition of need, followed by an expression of need and a request for assistance from potential beneficiary end users. Between the request for assistance and the preparation of a response, other steps may be necessary: a needs assessment or a clarification of the request. The response, once formulated, begins a process that can be defined in four broad stages:

Transfer

Technology transfer is the movement of technical information, equipment, prototypes, plans, blueprints, how-to-do-it manuals, etc., from a place where a technology is known, to a place where that technology may solve an identified problem. Technological transfer can be accomplished with publications, information systems, and AT training programs, in pilot projects set up to test designs in local situations or by providing consultants for on-site help. In general, technology transfer is accomplished either via media, especially print media; on-site and in person, through training; one-on-one consultants' explanations; and hands-on demonstration of the technology.

Adaptation

Any item, however successful in one particular situation, must be adapted to local conditions. The AT item must fit the physical environment, be compatible with the technological environment including the skill levels of the end-users, be appropriate in particular local economic terms and in a particular sociocultural setting. The process of adapting a design, plan, or prototype may require modifications based on new information from the environment or derived from interaction with the end-users.

Adaptation is essentially a "research and demonstration" stage that may involve a strong component of training for potential manufacturers, demonstrator/extensionists and/or end-users. The adaptation process needs to be documented in order to feed back the experience for further design modifications and for the process of adaptation of other AT prototypes in the same environment.

Diffusion

Diffusion requires on-site work in the communities that the technologies are designed to assist. The stage implies a set of subprocesses that lead to the widespread acceptance and use of the technologies. Priorities among these processes differ in each case, but among the more important are training, production, maintenance, marketing and promotion, legal approvals, financing, and identification of channels to reach end-users. The training of intermediaries to diffuse the technology, such as rural extension workers, as well as the training of end-users falls into this stage. Another important component is the establishment of production systems that are appropriate to the level of demand for the technologies, the support of the producers and supply of necessary raw materials, and a price structure that will assure access to end-users. Systems to maintain the technologies need to be established. All of these processes may also require special efforts in the other areas listed.

Acceptance and Implementation

Widespread acceptance and use of the new technologies by a maximum number of the potential end-users is the goal stage of the process. In many cases, initial acceptance and implementation or use is localized among a minority of the potential end-users. Additional efforts in the processes of the Transfer, Adaptation, or Diffusion stages may be required to enlarge acceptance.

Appropriate Technology is not a predefined class of material devices. In order for a technology to be appropriate, it must meet a recognized need. Before the matching of AT solutions to particular problems can begin, the need must be expressed and a very specific request for assistance must be voiced. Imposing solutions to meet unperceived needs represents "top down" technocratic development, not appropriate development.

Appropriate development consists of change occurring as a result of needs and actions generated from within a group, village, or society and facilitated by the philosophy and

concepts underlining what has come to be known as appropriate technology. It is a meaningful, lasting development made possible through the use of technologies that both fit local contexts and spur further change.

Appropriate or intermediate technologies can, given the context, encompass a wider range of specific technical options. In general, however, such technologies tend to share a number of common features when applied to developing countries. They:

- Promote job creation and meaningful work through the design and introduction of labor-intensive equipment and approaches, especially those involving decentralized, small-scale production units.

- Can be operated and maintained within the given community.

- Emphasize self-reliance through maximizing the use of local resources, materials, and expertise, and through the selective importation of foreign technologies that have proven appropriate.

- Can be afforded by the individuals, groups, businesses, or countries for which they are intended.

- Take into account all factors related to increased productivity before beginning a production enterprise.

- Are based upon local environments and ecological systems with minimal adverse impact on these systems.

- Encourage community members to recognize and expand their own abilities, knowledge, and skills in meeting their own needs.

APPENDIX C

GUINEAN GOVERNMENT INSTITUTIONS CONTACTED BY THE AT EXPLORATION TEAM, BY SECTOR

Agriculture

Ministere de l'Agriculture, des Eaux et Forets et des FAPAs
B. P. 576
Conakry
Contact: Directeur General de l'Agriculture

Inspection Generale des FAPAs
B. P. 576
Conakry
Contact: Diallo, Thierno--Inspecteur General

Bureau d'Etudes
B. P. 576
Conakry
Contact: Traore, Alpha Kabine--Directeur

Service National de l'Hydraulique
B. P. 642
Conakry
Contact: Balde, C.--Directeur General

Energy

Institut National de la Recherche et de la Documentation de la Guinee (INRDG)
B. P. 561
Conakry
Contact: Keita, Sidiki Kobele

Ministere de l'Agriculture, des Eaux et Forets et des FAPAs
B. P. 576
Conakry
Contact: Directeur General de l'Agriculture

Ministere de l'Energie
Conakry
Contact: Tompapa, Emile

Previous Page Blank

Service National de l'Hydraulique
B. P. 642
Conakry
Contact: Diallo, Amadou

Direction Nationale de la Meteorologie
Conakry
Contact: Mbady, Camara

Water

Service National de l'Amenagement des Points d'Eau (SNAPE)
B. P. 625
Conakry
Contact: Diallo, Amadou

Service National de l'Hydraulique
B. P. 642
Conakry
Contact: Balde, C.--Directeur General

Bureau d'Etudes
B. P. 576
Conakry
Contact: Direction de la Peche

Food and Nutrition

Bureau d'Etudes MEP
B. P. 307
Conakry
Contact: Dieng, Alkaly--Ing. Zootechnicien

Ministere de l'Elevage et de la Peche
B. P. 307
Conakry
Contact: Diallo, Mamoudou--Ing. Zootechnicien or
Dr. Bah, Mamoudou--Veterinaire

Other

Comite National des Femmes
B. P. 69
Conakry
Contact: Maka, Sophie

Centre National de Productivite
B. P. 881
Conakry
Contact: Diallo, Ibrahima

APPENDIX D

BIBLIOGRAPHY OF MATERIALS IN THE ATTACHED REFERENCE PACKET

Agriculture

Small Farm Grain Storage, Volume I, II, and III
Carl Lindblad and Laurel Druben, Action/Peace Corps and Volunteers in Technical Assistance (VITA), 1976.

China: Azolla Propagation and Small-Scale Technology
Food and Agriculture Organization of the United Nations, Rome, 1978.

Energy

Fourneaux a Bois Economiques pour faire la Cuisine
(Wood Conserving Cook Stoves: A Design Guide), Volunteers in Technical Assistance (VITA), 1980.

Briquetting Information: Presse combustaram; New Tool Discoveries; Ferro-Tech; Energy Cubes.

A Chinese Biogas Manual
Translated by Michael Crook, Intermediate Technology Publications, Ltd., 1979.

Compost, Fertilizer, and Biogas Production from Human and Farm Wastes in the People's Republic of China
Edited by Michael G. McGarry and Jill Stainforth, IDRC.

Water

Appropriate Technology for Water Supply and Sanitation: A Summary of Technical and Economic Options
John M. Kalbermatten, DeAnne S. Julius, and Charles G. Gunnerson, World Bank, 1980.

Exploitation a cout modique de petites installations de houille blanche
Hans W. Hamm, Volunteers in Technical Assistance (VITA), 1976.

World Bank Research in Water Supply and Sanitation: A Summary of Selected Publications
World Bank, 1980.

Hydraulic Ram, VITA Technical Bulletin #56
Ersal W. Kindel
VITA

Use of Hydraulic Rams in Nepal: A Guide to Manufacturing and Installation
UNICEF, Kathmandu, Nepal, 1977

Hydraulic Ram for Tropical Climates
Allen Inversin
VITA, 1980

Food and Nutrition

The Village Texturizer
Meals for Millions Foundation/VITA publications, 1977.

Solar Grain Dryer
Volunteers in Technical Assistance (VITA), 1980.

Solar Dryers of Cashew, Banana, and Pineapple
Dr. L. S. Cheema, Professor C. M. C. Ribeiro
Cidade Universitaria, Joao Pessoa, Brazil.

Solar Cabinet Dryer blueprint
Brace Research Institute, McGill University, 1972.

Articles: The San Juan Bosco Canning Cooperative, Coconut Shell Charcoal, and Oilseed Processing (collection of articles)

The Production of Charcoal in a Portable Metal Kiln
Tropical Products Institute.

Making Coir Rope
Volunteers in Technical Assistance (VITA), 1979.

Grain Mill for Home Use (VITA)

Home Flour Mill
Volunteers in Technical Assistance (VITA), 1979.

Freshwater Fish Pond Culture and Management
Marilyn Chakroff, Volunteers in Technical Assistance (VITA)/Peace Corps, 1976.

Fish Preservation
Volunteers in Technical Assistance (VITA)

Multisectoral

Making Building Blocks with the Cinva-Ram Block Press
Volunteers in Technical Assistance (VITA), 1976.

Liklik Buk: A Rural Development Handbook Cataloque for Papua New Guinea
The Melanesian Council of Churches, 1977.

Tools for Homesteaders, Gardeners and Small-Scale Farmers
Edited by Diana S. Branch, Rodale Press, Emmaus, Pennsylvania, 1978.