PN-AAR-237

ISN 36790

STOVE CONSULTANCY FOR LESOTHO RET PROJECT

Prepared by:

Margaret Thomas and Glenn Burket
Associates in Rural Development, Inc.
362 Main Street
Burlington, VT 05401
U. S. A.

Under AID contract number AFR-0206-C-00-1016-00.

Date: January, 1983

TABLE OF CONTENTS

Section	Page
Preface	i
I. Executive Summary	
A. Recommendations and General Conclusions	1
B. Organization of This Report	1
II. Introduction	
A. Purpose of the Consultancy	3
B. Initial Work Plan	4
C. Brief Description of Lesotho	5
D. Basotho Cooking Practices	5
1. Fuels	5
2. Foods	6
3. Cooking Devices and Pots	7
4. Water and Space Heating	9
E. The RET Project at Malefiloane	10
1. The Workshop	10
2. Stove Preference Surveys	10
III. Findings	
A. Mud Stoves	12
B. Metal Stoves	16
C. Mud and Metal Stove Testing	23
1. Initial Cooking Tests of Five Dung-Burning Stoves	23
2. Discussion of Initial Test Results	24
3. Development of the Model 3 Stove	26
4. User Testing of Mud and Model 3 Stoves	28
5. Chimney Testing and Care	29
D. Stone Paola	30
E. Metal Paolas	36
F. Retained Heat Cookers	40

Appendices:

A -- Cooking Test Forms and Procedures
B -- Sizing of Pot-Holes for RET Metal Stoves
C -- Supplement on Stone Paolas
D -- Supplement on Retained Heat Cookers
E -- Plans for the RET Model 3 Metal Stove, Production Jigs, Templates and Chimney System

PREFACE

This report presents the scope of work and activities undertaken by Ms. Margaret Thomas and Mr. Glenn Burket at the Lesotho Renewable Energy Technology (RET) project from July, 1982 through January, 1983. Ms. Thomas and Mr. Burket are stove specialists, who were consulting for Associates in Rural Development, Inc. (ARD), the contractor implementing the Lesotho RET project for the U. S. Agency for International Development (AID). Ms. Thomas is also a member of The Aprovecho Institute.

I. EXECUTIVE SUMMARY

A. Recommendations and General Conclusions

The specific cooking technologies that the Lesotho RET project is working with are in different stages of development, testing and dissemination. Thus, the recommendations for continuing work vary with the technology. They are:

- mud stoves--finish user evaluations and then promote them in mountains along with warmer rondavels, but hold off on dissemination in the lowlands until the project moves there;
- Model 3 metal stove--finish user evaluations and market research, and if favorable, proceed with production and dissemination as quickly as possible;
- stone paolas--step up dissemination efforts;
- improved metal paolas--finish tests and design work, if necessary, then proceed with training artisans for production; and
- retained heat cookers--pursue dissemination efforts.

The specific steps to be followed in implementing these recommendations are outlined in Section III of this report.

The Lesotho RET project is in a good position to disseminate fuel-conserving cooking devices. Much of the basic, technical work is done. However, to succeed in dissemination, the project must maintain a team that has continuity, dedication and a unified strategy.

B. Organization of This Report

The next section of this report, the introduction, presents the scope of work for this six-month consultancy along with background information on Lesotho, Basotho cooking practices and the RET project. Section III gives the findings for the five cooking technologies that the consultants worked on with the RET staff:

- lorena-type mud stoves,
- RET metal stoves,
- stone paolas,
- "improved" metal paolas, and

- retained heat cookers.

Each subsection covering a specific technology begins with a summary of work done during the consultancy, followed by specific recommendations for future work by RET project staff. Most of the technical details, forms for recording data and testing information appear in the appendices. The last appendix includes a complete set of plans for the RET Model 3 metal stove, as well as production jigs, templates and the chimney system. These plans are intended for use by metalworking shops that make arrangements with the project to produce the stoves in Lesotho. Separate copies of these plans can be obtained from the RET project.

II. INTRODUCTION

A. Purpose of the Consultancy

Ms. Thomas and Mr. Burket worked in Lesotho from July, 1982 through January, 1983 as ARD consultants to the RET project, which is sponsored jointly by AID and the Government of Lesotho through its Appropriate Technology Section (ATS) of the Ministry of Cooperatives and Rural Development (MINRUDEV). The purpose of the consultancy was to assist the RET project in the development of fuel-conserving cooking devices for Basotho villagers, using information and experience gained during the previous consultancy of Mr. Ianto Evans as a basis.

In his consultancy report (Status Report on Stove Work -- Lesotho RET Project, March, 1982), Mr. Evans stressed the need to develop stoves appropriate to "the very specific and unusual conditions of culture, fuels and foods in highland Lesotho." He pointed out that improved stoves already in use in other countries were not suitable for these conditions, and suggested that another consultant be sent to assist the RET staff in this work, as no member of the staff had experience with the process of designing, evaluating and disseminating new cooking technologies.

The scope of work for the present consultancy was to:

1. Assist the RET team in the continuation of workshops on cooking-device construction.

2. Assist the Malefiloane staff in cooking-device evaluation, and aid in development and coordination of research with the Maseru laboratory.

3. Oversee prototype and limited production runs of cooking devices and technologies (such as retained heat cookers, improved paolas, chimneys and cowls), and help to establish directions for dissemination of these technologies.

4. Help develop extension and market strategies suitable for Lesotho, based upon the previous consultancy report.

5. Provide brief training programs for village energy technicians (VETs) in cooperation with RET project staff.

6. Participate in ongoing technology selection, design, testing and dissemination programs.

Two-thirds of the consultancy was spent at the RET workshop in Malefiloane in the mountains of the Mokhotlong district, the

highest and most remote part of the country. The remaining third of the time was spent in Maseru, the capital, at the project's headquarters and the nearby Khubetsoana workshop.

B. Initial Work Plan

Information from the Lesotho Village Energy Survey Report, a local survey of pot usage done by Malefiloane staff members, and staff experiences in demonstrating some mud and metal stove models to local women provided a good basis for proceeding with the design, development and testing of stoves suited to the specific conditions found in the mountains of Lesotho.

While an initial decision was made to work with several different technologies and materials at once, it was clear that one priority would be indoor cook stoves with chimneys to vent smoke out of the dwelling. It was also decided that both mud and metal stove models would be developed and cooking tests conducted in the stove shed to assess their relative performance.

However, before stove testing could begin, fuel use data had to be gathered from women cooking basic dishes in the customary manner in their homes. (See the cooking timeline observation sheet in Appendix A.) Next, a standardized cooking test was developed. This procedure is presented in Appendix A, while the test results appear in Section III.C.

Two mud stove models that use dung fuels were built for testing, one of which has a radiating plate and metal door. One Thaba Tseka metal stove was also tested, and a second modified to try to improve heat transfer to the pot. Development of an RET metal stove that would accommodate three-legged pots was begun. It was hoped that this stove would use less fuel than the Thaba Tseka models, which consumed quite a lot of fuel in preliminary tests performed by RET staff.

In addition to the work with cook stoves designed for indoor use with chimneys, RET project staff were interested in several other types of cooking devices. One of the Peace Corps volunteers (PCVs), Mr. Mike Savino, had designed and built an outdoor cook stove for a school in the Malefiloane district. A decision was made to evaluate this stove, which came to be called a stone paola (paola ea majoe). The staff also had some experience with improved metal paolas, designed and built by the Thaba Tseka project. It was decided to test similar models, along with traditional paolas, to try to produce better designs. Finally, the RET staff had some experience with retained heat cookers, but wanted to test their suitability at high altitudes.

C. Brief Description of Lesotho

Lesotho is a small, independent country with an area of 30,355 square kilometers, completely surrounded by the Republic of South Africa. It has high plateaus and mountains, starting at 5,000 feet in the west and south, rising to 12,000 feet in the Drakensberg Range in the north and east. In the mountains, winters are very cold with icy winds and occasional snow. Temperatures below -20°C have been recorded.

The population of 1.3 million is primarily from a single tribe, the Basotho. Nearly half the male work force is absent at any one time, working in the gold and diamond mines in South Africa--the main source of cash income for villagers. Herding and agriculture are the major subsistence activities carried on by family members residing in villages. This pattern of male migrant labor means that resident village populations are composed mostly of women, children and old men. As a result, women have an unusually important position in villages, are often literate, head households and are sometimes chiefs.

D. Basotho Cooking Practices

In any country, fuel-saving cook stoves must be able to burn local fuels efficiently, provide the right kinds of heat for the foods most commonly cooked, and supply water and space heating when needed. A brief summary of Basotho fuels, foods, cooking devices, and water and space heating practices follows. It is intended to illuminate some of the constraints on the design and development of fuel-conserving cook stoves for Lesotho. (For more information, see the Lesotho Village Energy Survey Report, Section 3.4.1.)

1. Fuels

Fuels available in the mountains of Lesotho are principally small shrubs and dung. Shrubs (generally called patsi, which means woody fuel) are used year-round as a starter fuel to get various dung fuels burning well. They are also used alone when dung fuels are scarce (usually summer), or after rains when shrubs are easily uprooted. The preferred shrubs are called sehalahala, which actually refers to several species of resinous shrubs, including chrysocoma. Where sehalahala is unavailable, other plants such as lengana (Artemisia afra), lelingoana (Athanasia linifolia) and annual weeds are collected. Brush is gathered by women and girls, who pull bushes up by the roots and stack them into large bundles, which they then tie with homemade cords and carry home on their heads--the average weight of a head-load is about 20 kilograms. The greatest quantities of brush are gathered during the rainy season.

There are several forms of dung fuel. Cow dung is preferred, but horse and donkey dung are also used, especially by those who have few or no cattle. The main types of cattle dung are lisu, mapharoa and khapane. Lisu is dug out of stone-walled kraals in villages where cattle are kept at night. It is cut into pieces weighing an average of 1.3 kilograms and placed on the kraal walls to dry. When dry, it is stacked and protected from rain as much as possible. Individual blocks are then broken into smaller pieces as needed for cooking and heating. If the dung in the kraal is very wet, it may be dug out and formed into patties (mapharoa) by hand. These are also dried and stacked for later use. Both lisu and mapharoa are available year-round to those who own cattle; they are rarely sold. Khapane is dried cattle droppings, collected from fields where cattle graze. Anyone is free to collect khapane for fuel, and it is most readily available in winter and early spring, when cattle are kept near the villages. Once the rains start, the combination of dampness and the action of insects destroys the usefulness of khapane as a fuel. Khapane is collected by women and girls, who carry it home on their heads in bags, each weighing an average of 20 kilograms.

Horse and donkey dung, known as bokuluba, is a less desirable fuel because it is not as concentrated as cattle dung. However, it is often relied upon by poor women who do not have a good supply of cow dung, for it is easily collected wherever horses and donkeys are found. An average bag weighs about 16 kilograms.

Crop residues and wood are sometimes used as fuels, but do not have a major role in the mountains of Lesotho. Coal is virtually unavailable outside district capitals. Paraffin (kerosene) is often used for lighting, but rarely as a cooking fuel, except in villages on main roads or close to district capitals. It is too expensive for most villagers to use for cooking or heating. In addition, while many people own paraffin stoves, they are often in an unusable condition.

2. Foods

The diet of villagers in Lesotho is based on papa (maize porridge) and moroho (green leafy vegetables, including wild greens; home-grown cabbage, chard, mustard and beet greens; and store-bought cabbages in winter when nothing else is available). The next most common food is bohobe (bread), made from locally grown wheat and either baked or steamed. Lesheleshele and motoho (soft and sour porridge, respectively) are also commonly eaten. Mabele (sorghum), rather than corn, is the staple in the lowlands. Nama (meat) is eaten at feasts, to which everyone in the village and neighboring villages is invited. Other foods, such as potatoes, beans, peas, pumpkins, eggs and other grains, are available seasonally.

3. Cooking Devices and Pots

The most common cooking devices in the mountains of Lesotho are the open fire, paola (brazier) and paraffin stove. Open fires are used indoors and out. Outdoors, they may or may not be protected from the wind in some way. Often, the fire is built next to a low stone wall, in the shape of a cross or C known as a leifo, to protect it from the wind.

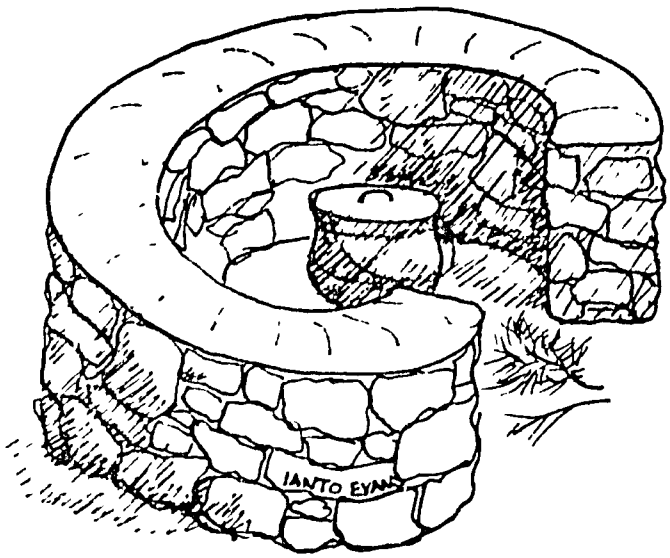

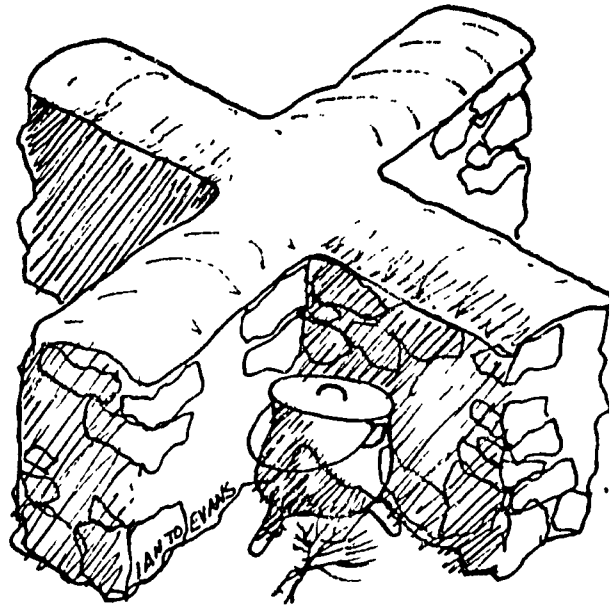

Three-legged cast iron pots are most commonly used with an open fire. They may be set on tri-foots (metal tripods) to raise them 10 to 15 centimeters off the ground. Brush is then placed under and around the pot, and lit; when it is burning well, dung is piled on the fire around the sides of the pot. If brush alone is used, it is continuously fed into the fire under the pot by hand, piece by piece.

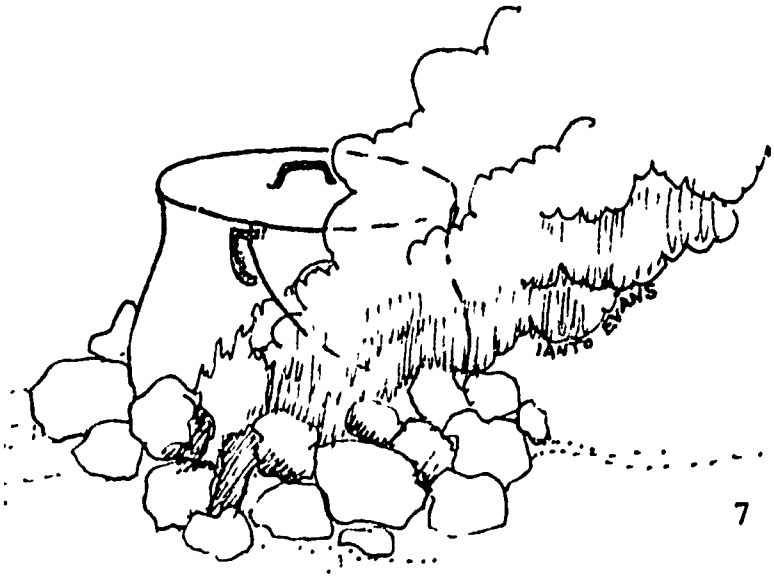

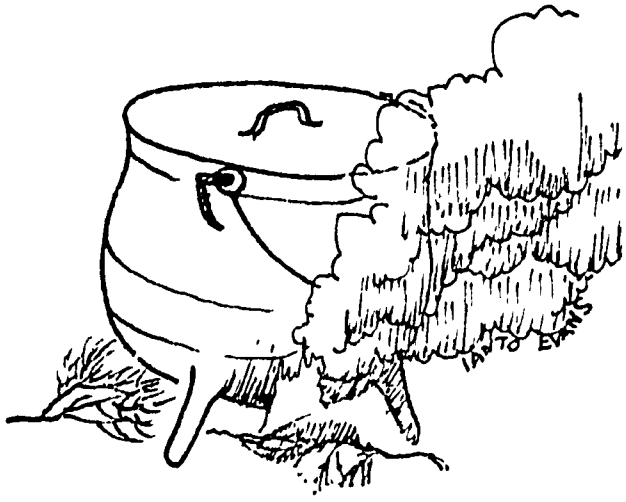

The paola is a simple brazier used throughout Lesotho. It is made from a leaky bucket or tin by punching holes all over the sides. Brush and dung are piled inside and the fire lit. The paola has a distinct advantage over an open fire in that it can be moved--the fire can be lit outdoors and the paola then carried inside when the fire is burning well and most of the smoke has dissipated. The holes punched in the sides serve as a vertical grate, allowing more air to reach the fire and thus improving combustion. A three-legged pot or flat-bottomed saucepan can be used with the paola, propped on a single iron rod stuck through the holes in the sides or a tri-foot set over the top.

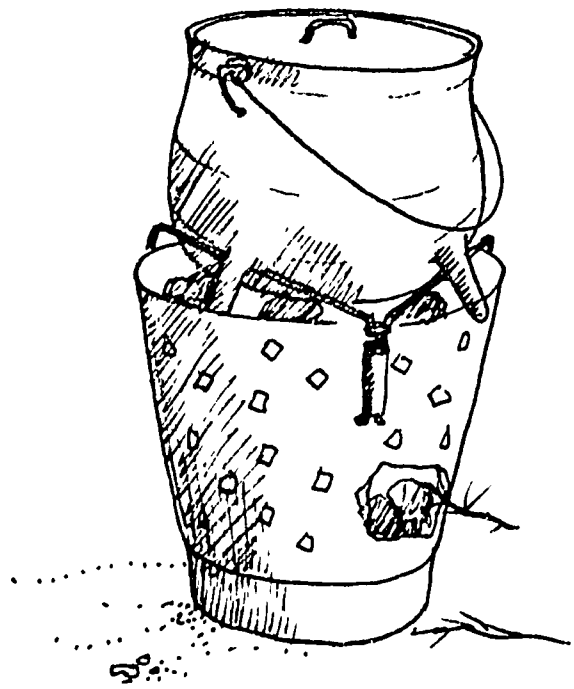

The other most commonly used cooking device is the paraffin stove, usually a simple pressure-type stove, such as a primus. They are frequently used by those who live near main roads or district capitals, especially if they have a cash income of some sort. Almost 80 percent of the households surveyed by the RET project owned a primus (nine percent owned paraffin wick stoves) and sometimes used them to heat water quickly for tea at any time of the day or bathing in the early morning. A few households own cast iron coal stoves or paraffin heaters, but do not often use them because of the high cost of these fuels.

Basotho use two main types of pots for cooking and a third for baking bread. Cooking pots are either the three-legged, cast iron type, known as pitsa and found throughout southern Africa, or aluminum flat-bottomed saucepans (also kettles and frying pans), which have been more recently introduced. Bread is usually baked in a flat-bottomed, cast iron polata (dutch oven), nestled on a bed of coals with more coals piled on top of the

lid. For daily cooking in the mountains, most people use three-legged, cast iron pots of sizes two to four.

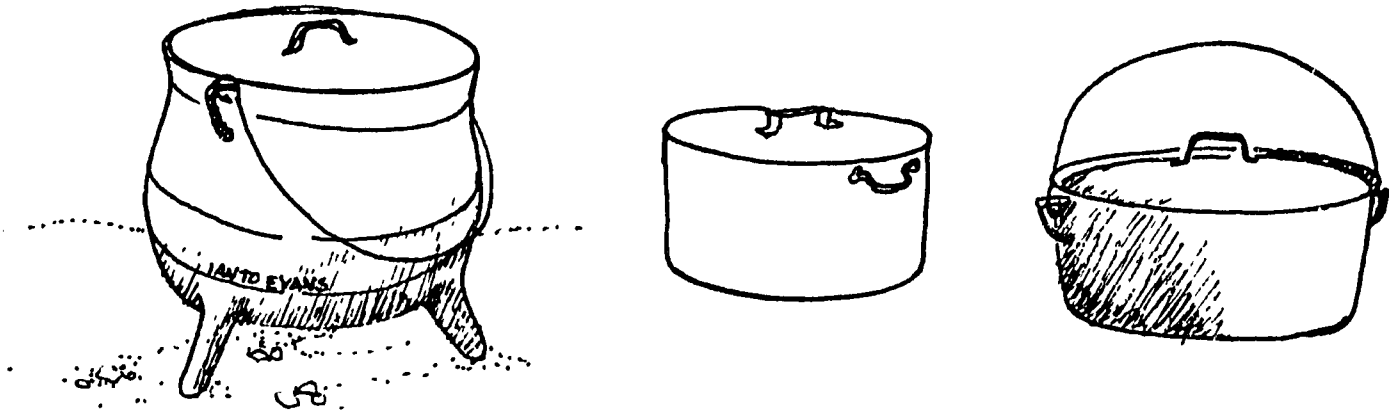

4. Water and Space Heating

All three cooking devices--the open fire, paola and even paraffin stoves--are also used for water and space heating. Water is often heated by placing a tin full of water next to an open fire or paola while food is cooking, or by heating it in a pot, saucepan or kettle just before or after food is cooked.

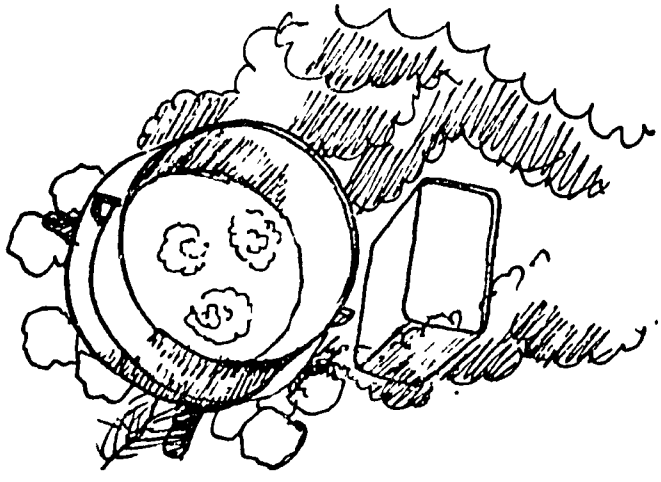

Space heating is needed all day long in winter, when the weather is cold and rainy in spring, and almost year-round during the early morning and evening hours. At these times, people cook indoors, so that the fire also provides space heating, and often keep a fire going after supper at night just for heat. The need for space heating led to consideration of a design for a welded sheet-metal stove with a chimney, something not usually tried in most stove programs because of its higher cost.

E. The RET Project at Malefiloane

1. The Workshop

The RET workshop in Malefiloane is an ideal place to work on stoves and get feedback from local women. The stove testing shed has one open side, which encourages people to watch and talk about the stove work going on. In addition, the workshop is located next to a co-op store and clinic. About 500 women from all the surrounding villages visit the clinic each month as part of a program for children under five. They come one Tuesday every month on a rotating basis, so every Tuesday, over 100 women are present for most of the morning. On Tuesdays, the RET staff gave demonstrations of the various devices being worked on. The demonstrations involved as much participation as possible--the women would cook local foods on the devices, share the food, and give their opinions on various stove models, retained heat cookers, solar ovens, etc. Over time, they became quite a sophisticated audience.

Sometimes, on other days of the week, one or several women would come to watch or participate, many on the recommendation of a friend who had been involved in a demonstration. Ms. Agnes Adontsi and Ms. Alina Ramoholi, RET staff members who speak Sesotho, Sexosa and English, were invaluable in answering questions and recording the opinions and suggestions offered.

2. Stove Preference Surveys

From July to September, 1982, Ms. Adontsi and Ms. Ramoholi conducted a series of demonstrations/interviews with local women to ascertain their stove preferences. On four Tuesdays in July, women were invited to demonstrations of the two metal stoves made at Thaba Tseka and two mud stove models built by RET staff in June, prior to this consultancy. Of the 236 people who participated, 219 preferred the metal stoves because they could cook and keep the house warm at the same time. Seventeen preferred the mud stoves, mainly because they were less expensive and the women could make them themselves.

On three Tuesdays in August, 68 women participated in cooking papa and moroho on any stove they chose from a selection of two mud stoves, two Thaba Tseka metal stoves, a traditional metal paola and a Thaba Tseka improved metal paola. Fifty-eight chose Thaba Tseka metal stoves and 10, the improved paola. Heating capability was the main reason for their preferences.

On two Tuesdays in September, women were free to cook on any of the available stoves, including two Thaba Tseka models (one modified to improve heat transfer to the pot), a traditional paola, a Thaba Tseka improved paola and two new mud stove models.

The two mud stoves (models III and IV) were better designed for dung fuels than the two previous models. On these days, 40 women chose to cook on the two mud stoves and 27, the Thaba Tseka metal stoves. There was more favorable comment on the mud stoves than earlier mud models, but women were worried about their space heating capability (see reports by Ms. Adontsi and Ms. Ramoholi).

Although there seemed to be a clear preference for metal stoves, it was decided that the program should continue with mud stoves. Some reasons for not eliminating them, given by women who liked the mud stoves, were that they:

- kept smoke out of the house,
- used less fuel,
- prevented children from getting burned,
- were inexpensive, and
- could be made by the women themselves.

Although no data were kept on the ages of women participating in the many demonstrations, Ms. Adontsi commented that older, poorer women showed the most interest in mud stoves. Younger women (often with smaller families) preferred the metal stoves. It was considered important to keep an option open for poorer, older women.

No data were kept on the ages of women participating in the many demonstrations, but Ms. Adontsi commented that older, poorer women showed the most interest in mud stoves. Younger women (often with smaller families) preferred the metal stoves. It was considered important to keep an option open for poorer, older women. It is also important to note that Basotho cook indoors in the winter when they need space heating and outdoors in the summer when such heat is not as necessary. Thus, RET staff members felt that work should proceed on mud <u>and</u> metal stoves for indoor use in conjunction with the development of fuel-efficient outdoor cooking devices.

III. FINDINGS

A. Mud Stoves

Based on the work of a previous ARD stove consultant, Mr. Ianto Evans (also a member of the Aprovecho Institute), project staff had built several mud stove models using sand/clay mix for testing and dissemination. Later models developed at the RET workshop in Khubetsoana, near Maseru, had fairly deep fireboxes with grates and ash catchers suitable for use with dung fuels.

Two of the early mud stove models at the Malefiloane workshop were destroyed because they did not perform well in preliminary tests conducted by RET staff. In their place, two versions of the later models were built--one had a metal radiating plate and a metal door insert (see the drawings of mud stoves III and IV on the next two pages). These stoves were tested along with two Thaba Tseka metal stoves, one of which was modified slightly, and the RET Model 2 metal stove, built by Mr. Burket and project staff members. (The results of these tests are presented in Section III.C, "Mud and Metal Stove Testing.")

The mud stoves used significantly less fuel than the metal stove models to accomplish the same cooking tasks. It was therefore decided that user testing of mud stoves should be conducted. In late December, 1982, construction of the simpler Model III mud stove began in the homes of five volunteers who had agreed to participate in fuel use studies.

In addition to working with Malefiloane staff members on mud stove construction and testing, Ms. Thomas conducted two mud stove training courses in the lowlands--the first for nutrition students at the Khubetsoana workshop in September, 1982, and the second for Food-for-Work women and RET staff members at Cenez, near Maseru, in January, 1983.

Recommendations

First, the fuel consumption of mud stoves in daily use in people's homes must be measured (see Section III.C). The results of these tests and information from interviews with users will permit the RET staff to determine how much effort to spend on the promotion of mud stoves in the mountains of Lesotho. One major question is whether the stoves can provide enough space heating. It is recommended that mud stoves be built in "warmer" rondavels intended for demonstrations in the mountains.

There are many indications that mud stoves may be more popular in the lowlands, partly because less space heating is needed there. Evidence of the potential of mud stoves in these areas includes:

MUD STOVE III - Malefiloane - RET Stove Shed
(replaced Mud Stove I)

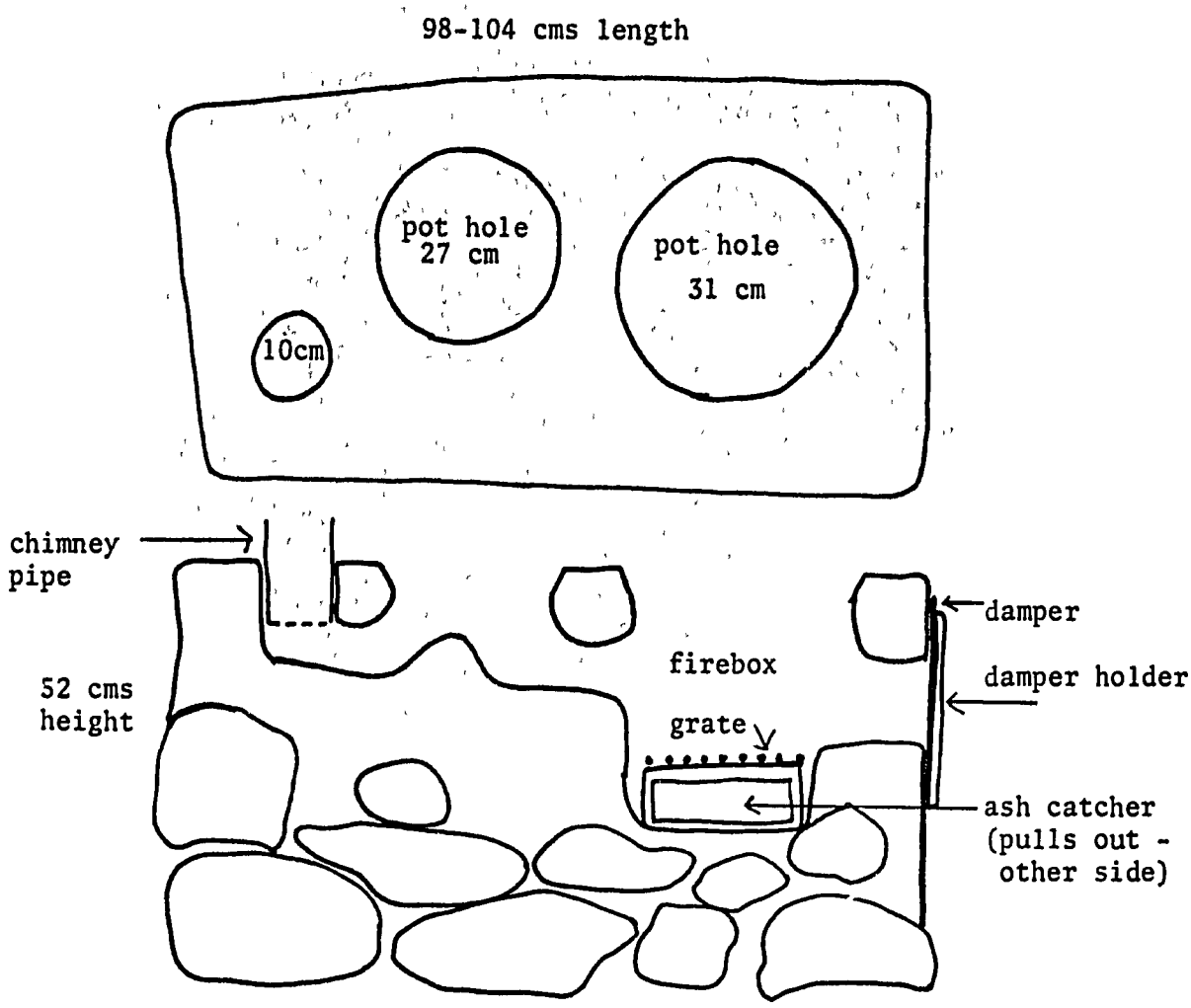

A Rock Base Mud Stove with Grate and Ash Catcher

Scale 1cm:10cm
Drawing by M. Thomas

MUD STOVE IV - Malefiloane - RET Stove Shed
(replaced Mud Stove II)

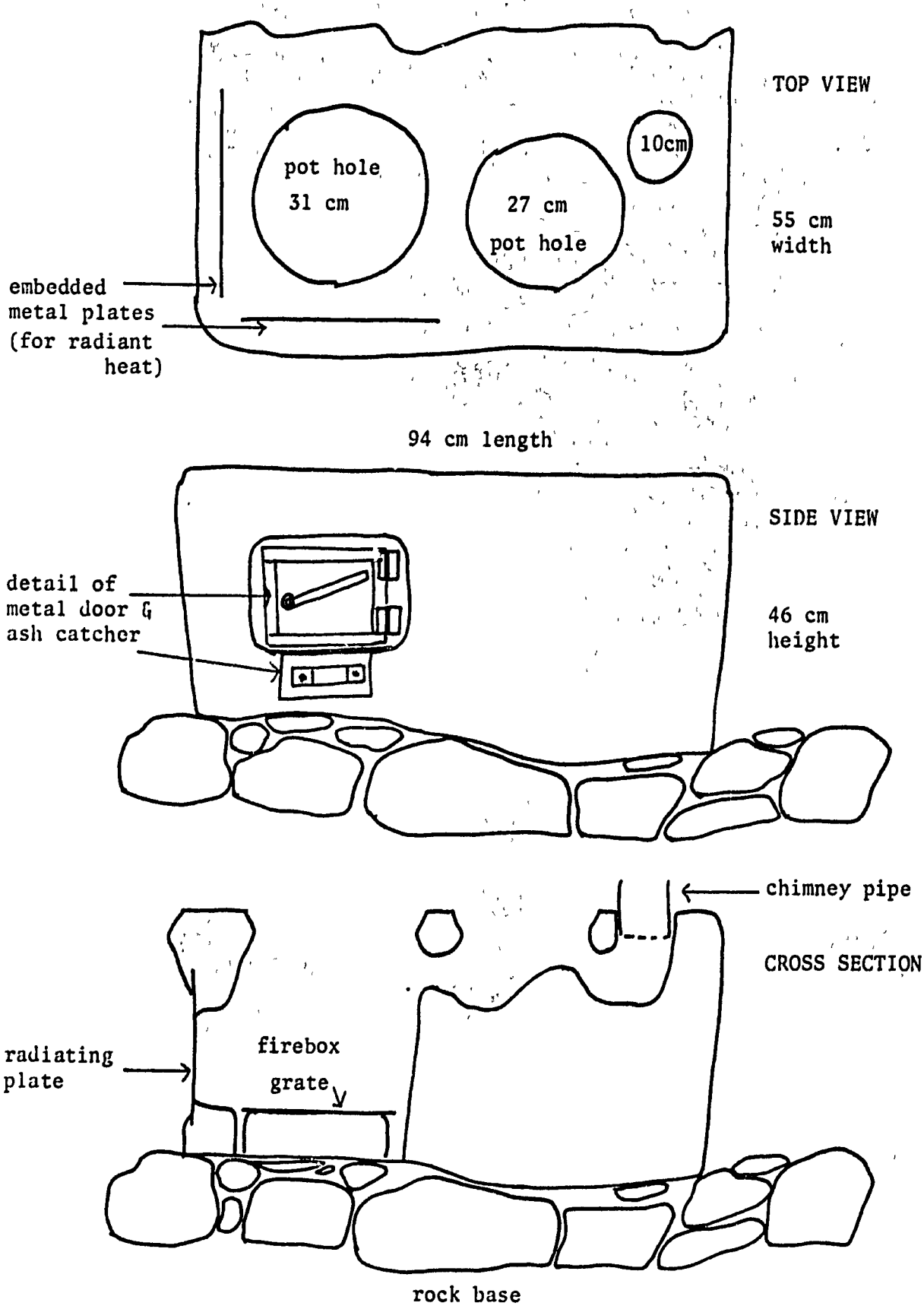

Scale 1cm:10cm
Drawing by M. Thomas

- women who participated in the Food-for-Work program conducted by the RET project in November and December, 1982 showed great interest in mud stoves and indicated they would like to learn how to build them;

- the Ministry of Agriculture's food preservation division and Plenty Lesotho have built a number of mud stoves in the lowlands and found them adequate for their needs; and

- more houses in the lowlands are built of mud than stone, so people have a very good understanding of working with mud.

When the project starts work in the lowlands, mud stoves should be tested under daily conditions in at least five homes. If fuel savings are demonstrated and user comments are favorable, mud stoves should be included in the RET program there.

Mud stoves can be built by owners or artisans, who may be trained by the RET project in much the same way as stone paola builders have been trained (see Section III.D). The skills needed are similar, and those who have built stone paolas will have had some experience with the sand/clay mix and should be able to learn to build mud stoves quite quickly. Thumane is an eroded rock material that women use to make leifos. In the construction of mud stoves, thumane can be used in combination with sand or in place of it in some cases.

It is further recommended that the project organize the mud stove dissemination effort along the same lines as for stone paolas, using the same people and channels as much as possible (again see Section III.D). The RET project should focus its training program on women who will use the stoves and wish to make them for sale or trade. The project should produce an instruction sheet in Sesotho for mud stove users that provides information on stove and chimney care (including chimney cleaning), repair and cooking techniques. A checklist for mud stove builders, much like the one for the stone paola (see Appendix C), should also be devised to be used during follow-up. Among other queries, it should include:

- do pots fit the stove body tightly;

- are pot-holes shaped so that more than one size of pot can be used;

- is the exit tunnel from the firebox as high as practical, while leaving a strong bridge between pot-holes;

- is the overall dimension of the tunnels the same as the chimney's to facilitate air flow;

- does the stove have a grate;

- does the ash-catcher/damper system fit and work well; and
- is the chimney suitable and installed in as safe a manner as possible?

B. Metal Stoves

Mr. Burket did most of the design work on the RET metal stove, although he consulted with Ms. Thomas, Mr. Savino, Mr. Gary Klein (ARD's laboratory supervisor for the Lesotho RET project), Mr. Koranta Matete and Mr. Ernest Khabisi at different times during the process. Various preliminary models were tested, primarily by Ms. Thomas and Ms. Ramoholi, with assistance from Ms. Adontsi and Mr. David Palasits.

Metal stove development at the RET project has focused on meeting the following requirements for a cooking/heating device in Lesotho. A stove must:

- vent smoke out of the cooking/living area;
- accommodate three-legged pots and saucepans;
- be inexpensive;
- save fuel, compared to traditional cooking practices;
- offer space heating capability; and
- have the potential for manufacture within the country.

The first design attempt resulted in the RET Model 1 stove (see the drawing on the next page). A 25-liter paint bucket forms the firebox, to which a door and stove body are bolted. The stove has two pot-holes that can accommodate three-legged pots of sizes two to four. (See Appendix B for a discussion of pot-hole sizing.) Smoke exits from the top right corner, next to a space for a water-heating tin. Baffles are located under the pot-holes to increase heat transfer to the pots. A grate and ash catcher are included, and the latter also serves as an air control.

Building this stove posed several problems. Attaching components to the bucket's curved surfaces was difficult, and drilling holes, inserting bolts and tightening them proved very tedious. As a result, replacing the firebox would not be a simple matter. In addition, the design did not handle saucepans easily.

The RET Model 2 stove (see the following page) has the same basic body design as the Model 1. However, smoke exits from the side rather than the top, which allows the stove body to be

RET MODEL 1
(Scale 1:5)
(in centimeters)

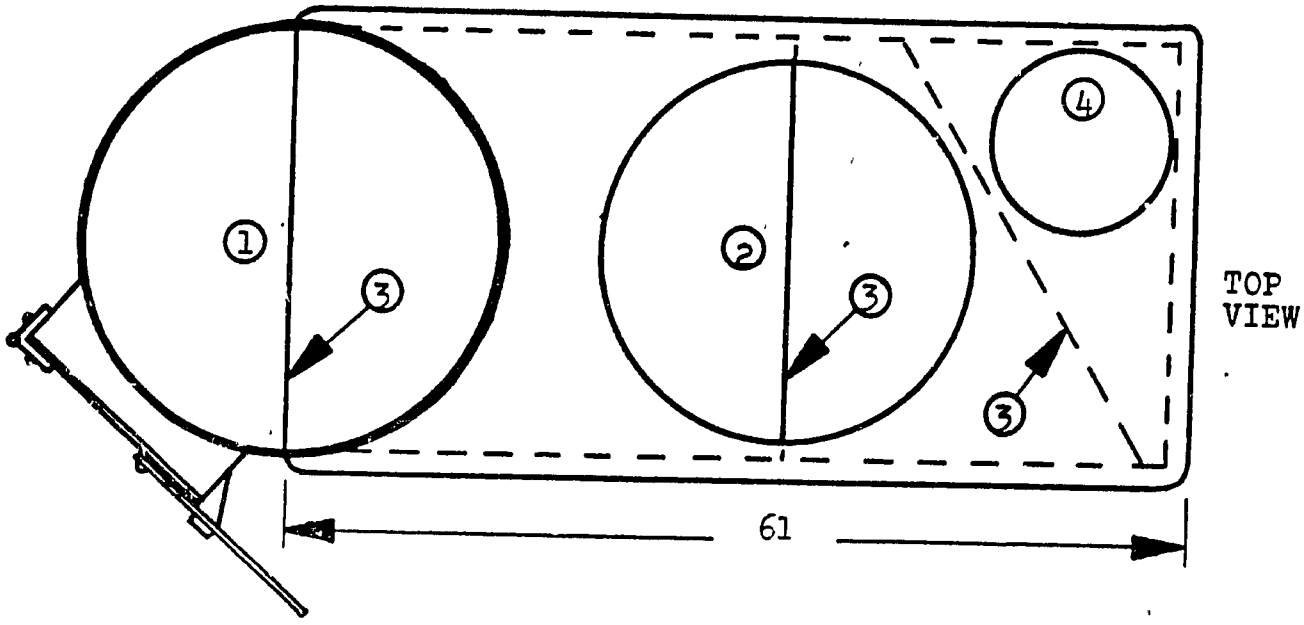

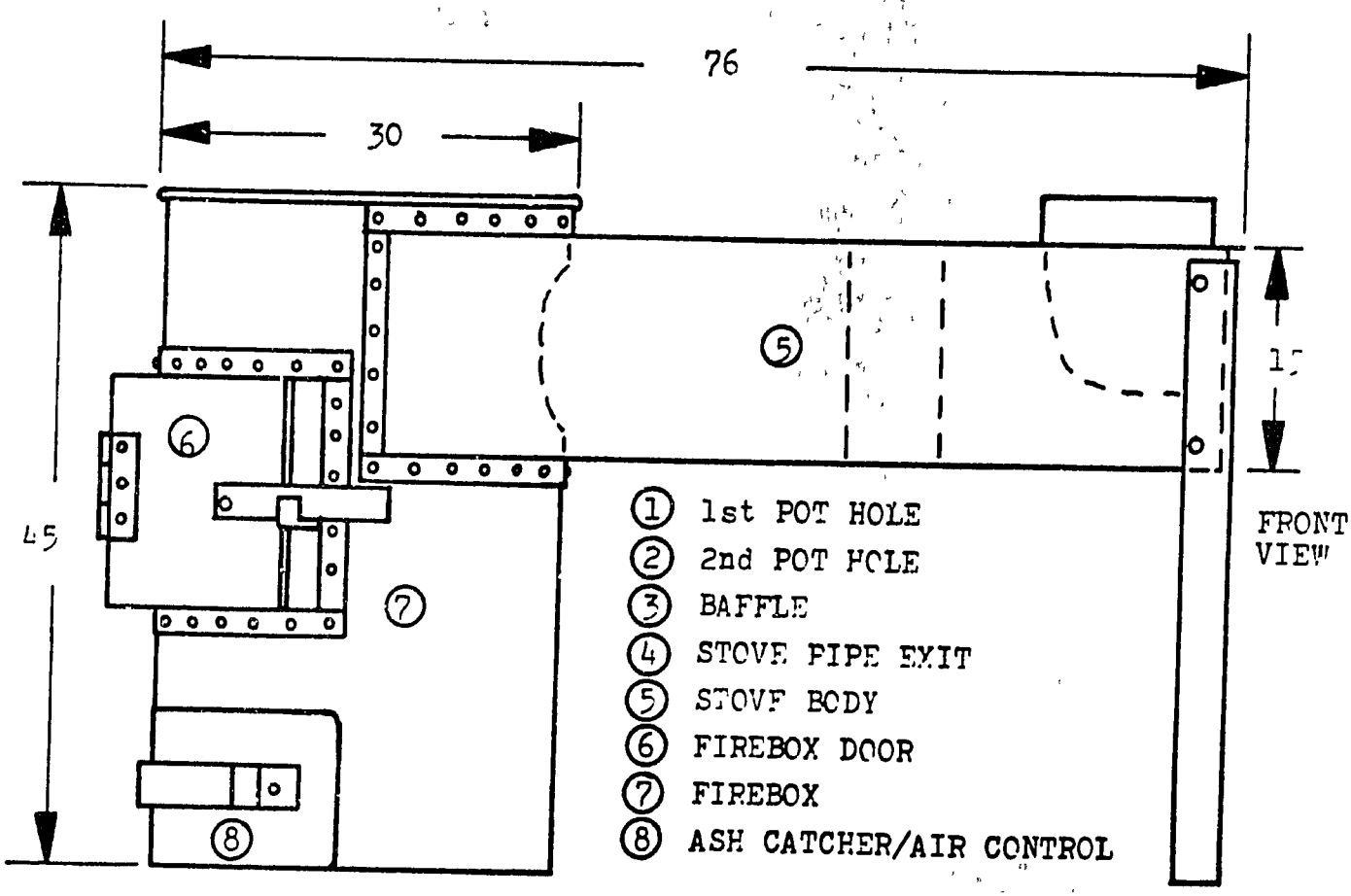

RET MODEL 2.
(Scale 1:5)
(in centimeters)

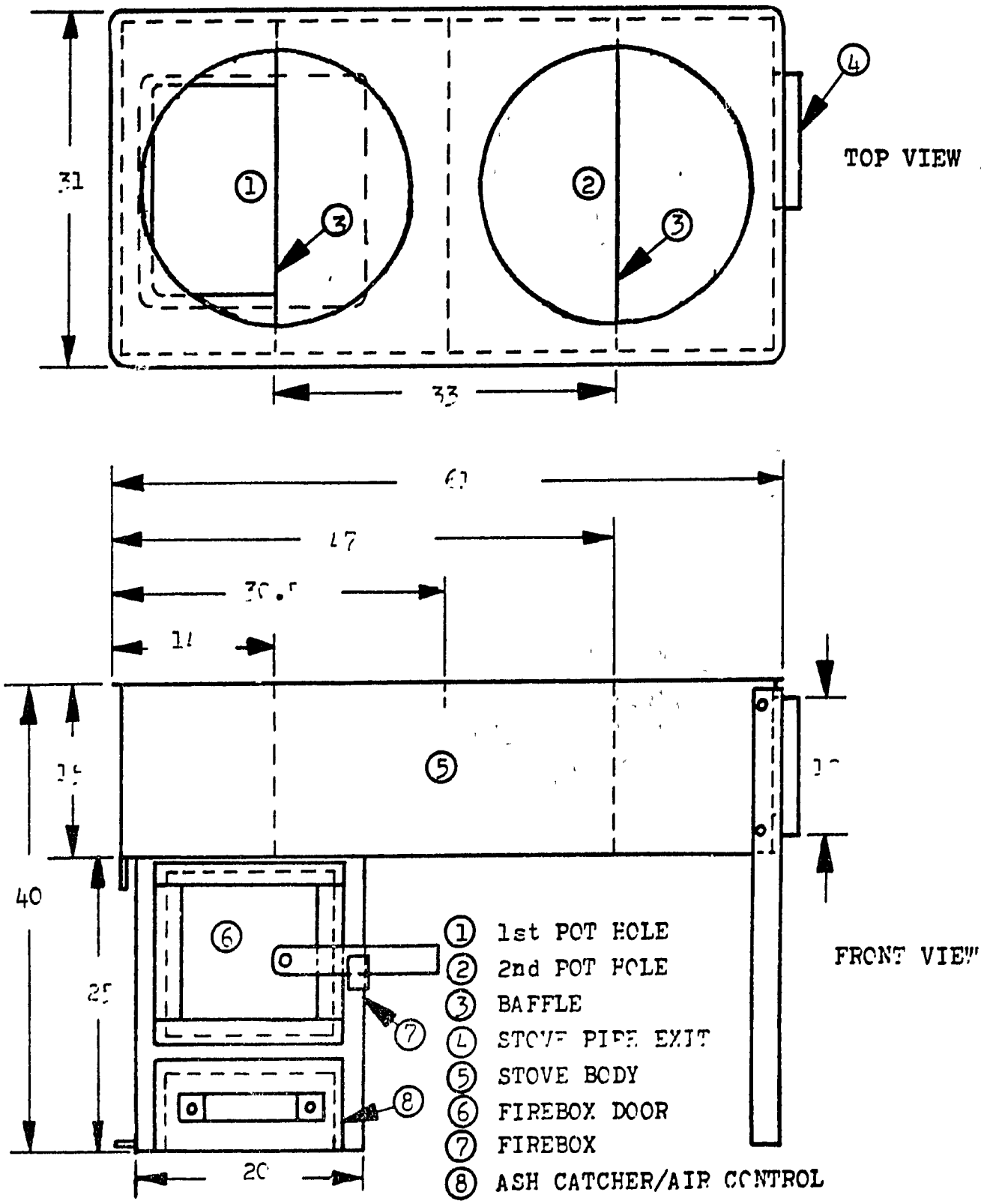

shorter overall, thus saving material. The bucket firebox was replaced with a permanent, heavy (three-millimeter), metal, square-section firebox. This component should last much longer than the bucket, and parts can be attached to its flat surfaces more easily. Other features include the addition of clips on the side of the firebox to hold a water-heating tin and a pot-hole cover/baffle system that heats saucepans more effectively. From a production standpoint, this stove (as well as the Model 3) can be made in batches of six from one standard size (244 by 122 centimeters) sheet of steel, three millimeters thick, and one 1.6-millimeter sheet with very little waste.

Some problems encountered with this model included water in the tin not getting hot enough, fuel falling out of the firebox when the door was opened, and an ash catcher that was too small and jammed on the floor. It also appeared that the firebox was too high and the first baffle protruded too far over the firebox, thus lowering the transfer of radiant heat to the first pot.

The Model 2 stove was tested with two Thaba Tseka metal stove models and two mud stove designs (see Section III.C). In cooking tests, the Model 2 used an intermediate amount of fuel compared to the other stoves. However, it was felt that this design showed enough promise to warrant further modifications and testing in an attempt to improve performance.

Changes incorporated in the RET Model 3 stove (see the drawing on the next page and Appendix E for a complete set of plans) to solve various problems included:

- raising the clips for the water-heating tin to expose it to higher temperatures;
- making the metal lip between the door opening and grate higher to keep fuel from falling out so readily;
- increasing the size of ash catcher and raising the firebox off the ground with angle-iron feet; and
- reducing the height of the stove body from 15 to 12.5 centimeters, placing the grate higher in the firebox and moving the first baffle to the edge of the firebox.

With these design improvements, it was decided that a limited production run was warranted. Before beginning production, however, Mr. Burket built and installed an abrasive cutoff saw and bending brake at the RET workshop in Malefiloane, and a table-mounted hand shear was purchased. Six stoves were then manufactured between December 15 and 31, 1982 as a training exercise for RET workshop staff members--Mr. Matete from Malefiloane and Mr. Khabisi from Khubetsoana.

RET MODEL 3
(Scale 1:5)
(in centimeters)

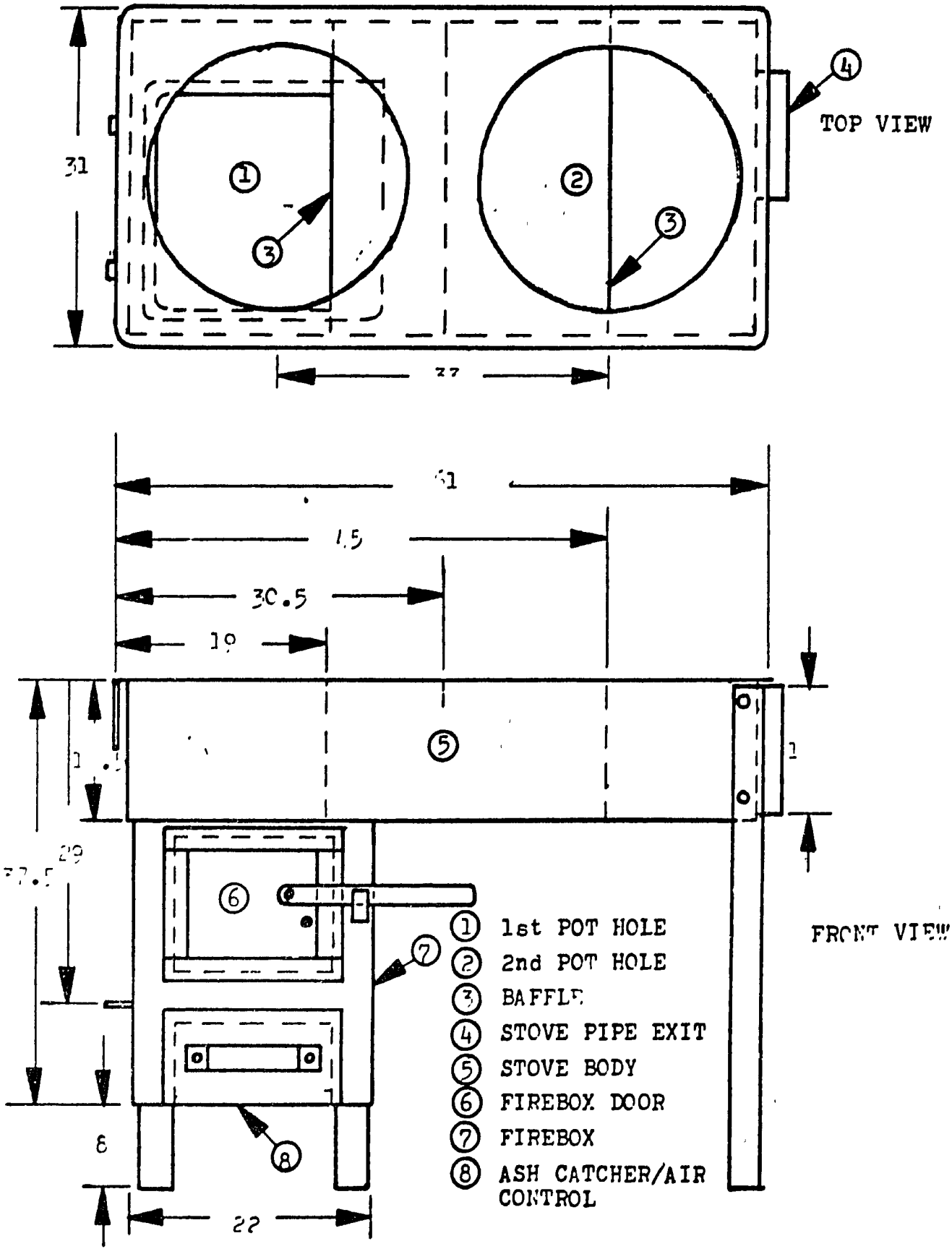

As expected, problems and delays occurred during this first production run. Stove parts were cut from the steel sheets using an oxyacetylene torch, but this proved time-consuming and costly. Jigs and templates had to be designed and built for this run and future production. Some of the welds were difficult for the workshop staff.

These factors pushed production costs to about M100 per stove, and generator time accounted for about half that. The price of generator time meant a high minimum cost per stove that could not be reduced. Thus, a decision was made to concentrate serious production efforts in areas of Lesotho serviced by utility power, which is about one-tenth the cost of electricity from a generator.

Several workshops in the Maseru area were contacted and a potential manufacturer identified. The Thaba Khupa workshop (a metal shop at an ecumenical, agricultural training school) expressed an interest in producing the stove and sent three metalworkers--Mr. Daniel Seipati, Mr. John Motlaletsi and Mr. Ellia Mohletsane--to participate in a second production run/ training session, held at the Khubetsoana RET workshop from January 11 to 18, 1983. Mr. Matete and Mr. Khabisi conducted most of the training.

Because this production run also served as a training session, no exact records of labor time and costs were kept. However, the use of a mounted hand shear to cut the major stove pieces, as opposed to an oxyacetylene torch, reduced both production time and costs. In addition, the outstanding metalworking and welding skills of the Thaba Khupa workers sped up production.

One stove and a set of jigs were sent back with the Thaba Khupa workers to help them assess production possibilities. On January 24, 1983, the RET project signed an agreement with the Thaba Khupa workshop to manufacture six stoves for the purposes of cost estimation and marketing. The workshop's initial rough cost estimate was about M50 per stove.

User testing of the Model 3 was initiated in the Malefiloane area with the installation of the first stove on January 20, 1983. Five families volunteered to use the stove alternately with their usual cooking device, while RET staff members monitor fuel use (see Section III.C).

In March, 1983, a representative of the monitoring team, Mr. Klein, who is investigating marketing of the stove, and at least one member of the Thaba Khupa production staff will meet to discuss and recommend design modifications, if necessary. Use, marketing and production feedback, along with the criteria outlined earlier in this section, will be used to evaluate the Model 3 design.

Recommendations

Barring any serious, unexpected problem(s) with the Model 3 stove, it is recommended that the project proceed with production and dissemination as soon as possible. Aside from the obvious end-use benefits, the manufacture of a relatively simple, durable product, like the Model 3 stove, can serve as an important part of the light industrial base in Lesotho, a country which is currently totally dependent on outside industrial resources. Thus, it is recommended that the RET project provide proprietary and/or economic incentives for this stove's production in Lesotho. In any case, steps should be taken to assure that an adequate supply of stoves will be available to meet demand.

It is very important that the project monitor all producers of the Model 3 stove, including the Thaba Khupa workshop, to ensure that they maintain a high level of quality. Mr. Jay Stryker, ARD's team leader for the RET project, or Mr. Klein and Mr. Khabisi should schedule such monitoring on a regular basis.

In addition to letting contracts for the production of the Model 3, the project should make an effort to market the stove through commercial channels. This would include demonstrating the stove to wholesalers, retailers and others, such as Co-op Lesotho, to secure orders, and to possible users/purchasers to stimulate demand.

A users' guide, that contains instructions on stove and chimney care, should be published in Sesotho and accompany each unit sold or distributed. The guide should point out that the stove is designed for dung fuels. However, it is likely that users will substitute other fuels. If wood is used, the air intake should be decreased considerably or the stove will burn more wood than necessary. If coal is used, the grate should be raised so the pots receive more radiant heat. It should be noted that the stove will not last as long if coal is used regularly.

The project's ongoing work with metal stoves, as well as other technologies, would greatly benefit if the Khubetsoana workshop facilities were upgraded. At present, it is no more convenient to work there than at the remote Malefiloane workshop, as utilities are long overdue at the site. In addition, a serious effort should be made to organize the shop, and staff members require better coordination and supervision.

Staff at both workshops expressed a desire for further training in areas related to metalworking:

- advanced welding,
- basic machine design,
- technical drawing, and

- care of tools.

They should be encouraged and given as much assistance as possible to obtain such training, either in-house or at other institutions.

C. Mud and Metal Stove Testing

This section discusses the results of two series of tests conducted with indoor mud and metal stoves with chimneys, including:

- cooking fuel use tests comparing mud stoves, Thaba Tseka metal stoves and the RET Model 2 metal stove; and
- cooking fuel use tests performed in the process of modifying the Model 2 stove design.

It also covers the tests and preliminary results for a chimney installation with RET mud and metal stoves. The procedures for user testing of the mud and Model 3 metal stoves, currently being carried out by the Malefiloane staff, are presented in Appendix A.

1. Initial Cooking Tests of Five Dung-Burning Stoves

During October and November, 1982, cooking fuel use tests were conducted with five stoves at the Malefiloane workshop--lorena-type mud stoves III and IV, the RET Model 2 metal stove and two metal stoves manufactured in Thaba Tseka, one of which was modified by the RET staff. These modifications included a higher baffle between firebox and chimney to lengthen the flame path, a movable baffle to direct heat to either or both pots and an improved ash catcher/air damper system.

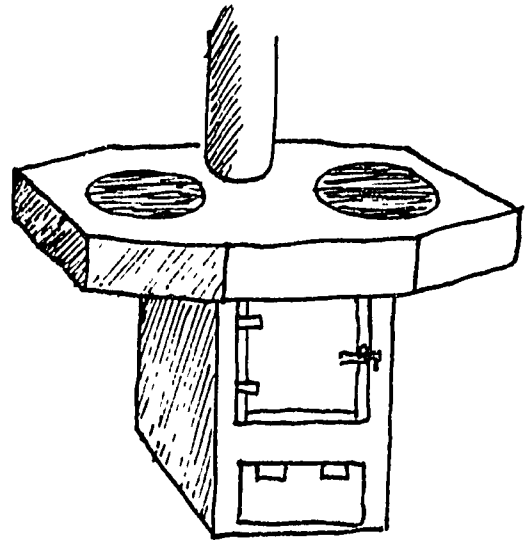

A cooking task was chosen, based on data from timeline observations taken with various women in nearby villages--1,000 grams of papa (corn porridge) in two liters of water, 700 grams of moroho (cabbage) with oil and an additional pot of three liters of water to absorb any additional useful heat. Although the timeline data refer to cooking with khapane and bokoluba, a decision was made to test the stoves using lisu (kraal dung). Lisu is the preferred fuel and of prime importance in the spring when rain ruins the supply of khapane. It is also the most difficult dung fuel to burn. Thus, it was considered important that the stoves be able to burn lisu--this would assure that using khapane or bokoluba would pose no problems.

To get the fire going, the cook was allowed to use as much patsi (small shrubs) as desired, but no more than 300 grams of khapane. She could then use as much lisu as required to accomplish the cooking task. The only other restriction was that no fuel could be added once the phoofo (cornmeal) was placed in the boiling water. The mud stoves and RET Model 2 accommodate three-legged pots, so one of size four was used for the papa, size two for the moroho and size three for the water. The Thaba Tseka stoves can only take saucepans, so three aluminum pans, 23 centimeters in diameter, were used for the testing. Data were recorded on standardized forms by a second person, who served as an observer/recorder. (See cooking test procedures for two pot-hole stoves and data sheets in Appendix A.)

Five tests were run on each stove. Eight had to be repeated because of a faulty scale, and the data from four were omitted because of procedural errors made by the cook. The average results for each stove are given in Table 1 on the following page.

2. Discussion of Initial Test Results

The three types of stoves performed quite differently. The two mud stoves were most efficient--mud stove IV used only about half the lisu required by the unmodified Thaba Tseka metal stove. The mud stoves also had good chimney temperatures with average highs of 161°C and 142°C (measured 35 centimeters above the chimney's exit from the stove). The fact that the final temperature of the water in the third pot exceeded the temperature of gases escaping up the chimney indicates that the pots captured a good amount of radiant heat from the coals.

The Thaba Tseka stoves burned faster than the mud stoves, thus sending much more heat up the chimney and consuming more fuel. Also, the pots on these stoves captured much less radiant heat, as the final water temperatures never exceeded the final chimney temperatures. Modification of the Thaba Tseka stove slowed down the flow of gases somewhat. Compared to the unmodified version, the average chimney temperature of the

TABLE 1

AVERAGE RESULTS FROM FIVE COOKING TESTS FOR FIVE STOVES

Stove	Lisu Used (grams)	Total Fuel Used (grams)	Time to Boil First Pot (minutes)	Time to Cook Moroho (minutes)	Total Time Water Was Heating (minutes)	Final Water Temperature (°C)	Average High Chimney Temp. (°C)
Mud Stove IV	1248	1802	19.6	33.6	36.6	90.4	161
Mud Stove III	1416	2048	24.2	32.8	35.6	74.2	142
RET No. 2	1692	2230	28.6	42.2	34.6	53.0	116
Thaba Tseka Modified	2296	2884	25.0	31.8	34.0	59.4	193
Thaba Tseka Regular	2404	2944	27.2	30.2	32.6	53.8	244

modified stove was 50 degrees lower, and it used 4.5 percent less lisu. Further extension of the baffle might lessen fuel consumption even more.

The performance of the RET Model 2 stove fell somewhere in between the mud and Thaba Tseka metal stoves. It consumed 30 percent less lisu than the unmodified Thaba Tseka stove, but burned rather slowly. It did not draw as well as desired, as indicated by an average high chimney temperature of only 116°C.

Using the results for the unmodified Thaba Tseka stove as a baseline, comparative fuel savings for the four other stoves are as follows:

- mud stove IV saved 48 percent of the lisu and 39 percent of all fuel used;
- mud stove III saved 41 percent of the lisu and 30 percent of all fuel;
- the RET Model 2 metal stove saved 30 percent of the lisu and 24 percent of all fuel; and
- the modified Thaba Tseka stove saved 4.5 percent of the lisu and two percent of all fuel.

The cooking timeline observations made with local women involved different fuels, but a very rough comparison of fuel use is possible. An average of 3,448 grams of fuel (including patsi) was used to accomplish an average cooking task that was slightly smaller than the present one--710 grams phoofo in 1,775 milliliters water and 700 grams of moroho. Compared to the traditional method of cooking, preliminary estimates indicate that the unmodified Thaba Tseka stove saves 15 percent of the fuel required; the modified Thaba Tseka stove, 16 percent; the RET Model 2, 35 percent; and mud stove IV, 48 percent.

In these initial tests, the two mud stoves proved to be the most efficient for cooking. However, the space heating capabilities of these stoves are limited. Thus, a decision was made to continue development work with the RET metal stove, which used much less fuel than both Thaba Tseka metal stoves. It was further decided to modify the Model 2 to take better advantage of radiant heat from lisu coals, increase the draw somewhat to improve performance, and adapt it to accommodate saucepans.

3. Development of the Model 3 Stove

The first modification of the Model 2 was the design of a special pot-hole cover to adapt the stove for use with saucepans. The cover worked reasonably well and even improved fuel savings, compared to the results with three-legged pots (see Table 2).

TABLE 2

AVERAGE RESULTS FROM FIVE COOKING TESTS FOR RET MODELS 2 AND 3

Stove	Lisu Used (grams)	Total Fuel Used (grams)	Time to Boil First Pot (minutes)	Time to Cook Moroho (minutes)	Total Time Water Was Heating (minutes)	Final Water Temperature (°C)	Average High Chimney Temp. (°C)
Model 2 with 3-legged pots	1692	2230	28.6	42.2	34.6	53.0	116
Model 2 with saucepans	1314	1870	24.6	46.2	44.6	52.0	95
Model 2 with grate 5cm higher, 3-legged pots	980	1460	23.8	36.2	33.0	48.0	117
Model 2 with grate 5cm higher, baffle removed, 3-legged pots	1126	1546	20.0	31.8	31.4	56.0	126
Model 3 with 3-legged pots (4 tests)	1125	1530	19.0	33.5	34.0	53.0	146
Model 3 with saucepans	testing not yet completed						

However, the results from tests of a modified saucepan pot-hole cover are not yet available.

To make better use of radiant heat, the second alteration was to raise the grate in the firebox by five centimeters. This also improved fuel savings, but combustion was still slow. In an attempt to remedy this, the third change was to move the first baffle to the side of the firebox. This improved combustion performance, but at the cost of a slight increase in fuel consumption. To further improve combustion, an extra length of stove pipe was added to the chimney. The result was a higher average chimney temperature and better draft, while overall fuel use was about the same as for the Model 2.

Finally, to reduce wasted material, the height of the stove body was reduced and the grate raised to arrive at the configuration for the Model 3 stove. At this point, it was decided that a limited production run was warranted, and stoves were installed in homes for user testing.

4. User Testing of Mud and Model 3 Stoves

Malefiloane staff members are currently conducting user tests for five mud and five Model 3 metal stoves. The first mud stove for testing was built in Tebeleng at the end of December, 1982 and the second at Thaba Khubelu in mid-January, 1983. The first metal stove was also installed in mid-January in Mateanong. The rest will be built or installed during February and March, 1983. However, actual user testing will not begin until March to give participants time to become accustomed to the stoves. The testing procedure is outlined below.

Within a week after a stove's installation, a staff member makes a follow-up visit to assure that the cook understands how to use the stove. During this visit, time is spent cooking on the stove together. One to two weeks later, another visit is made to ascertain whether the stove is being used regularly. If not, the cook is given further instruction in its use. If so, a background questionnaire on household cooking and heating is administered and a date set to begin daily fuel use observations.

A total of 14 fuel use observations will be made, one each on seven days when the new stove is in use and seven days when the participant is cooking with other method(s). The results should provide a good estimate of the fuel saved when a mud or Model 3 stove is in routine household use. This figure may be lower than results from testing under laboratory conditions.

An agreement between participants and the RET project stipulates that if the cook wants the stove after using it for two months and cooperating for two weeks of observations and measurements, the stove and chimney can be purchased for the cost

of materials alone. (Appendix A presents an outline of the user test agreement, the background data questionnaire, daily fuel use record sheet and final stove user survey, which is completed after the stove has been in place for two months, when the participant decides whether to purchase it.)

5. Chimney Testing and Care

To maximize space heating in a cold rondavel at high elevations, it was decided that a chimney running straight through the roof would be best. Mr. Burket developed a simplified version of a type of chimney that is used in the United States to pass through walls or ceilings made of combustible materials. It consists of a stovepipe within a stovepipe with an air space between the two (see Appendix E)--the inner stovepipe is 108 millimeters in diameter and the outer, 150 millimeters. The inner pipe is held in place with six sheet metal clips, but is free to slide within the outer one for easy assembly and cleaning.

This chimney system was installed at the Malefiloane stove shed for observation during cooking fuel use tests with the Model 2 and 3 stoves. During testing, temperatures from both stovepipes were recorded--for the inner one at a height of 35 centimeters above its exit from the stove and for the outer, 35 centimeters from its bottom edge. The chimney thermometers measured up to 400°C in five-degree increments, so all temperatures were rounded to the nearest five degrees.

Temperatures were recorded every three minutes during 29 tests. Of these, 26 were standard cooking fuel use tests--21 conducted with lisu as the main fuel, four with wood and one with coal. The remaining three were specifically intended to test the chimney. To simulate a chimney fire, the chimney was filled from top to bottom with very dry sehalahala and a fire lit directly in the chimney. The results of these tests are shown below. However, the averages for sehalahala are based on only two tests, as the third produced unreasonably low readings due to the way the sehalahala burned.

Fuel	Number of Tests	Inner Stovepipe Average High	Outer Stovepipe Average High	Average Ambient Temperature
lisu	21	120°C	28°C	23°C
wood	4	120°C	26°C	21°C
coal	1	110°C	25°C	17°C
sehalahala	3	368°C	78°C	--

These results show that under normal conditions, there is no danger of the outer stovepipe getting hot enough to ignite either the wood or thatch where it comes in contact with the roof. Even when sehalahala is burned in the chimney, the temperature does not rise to the point of combustion for wood (about 200°C) or straw/thatch.

It is recommended that Malefiloane staff members conduct additional tests when this chimney system is installed through a thatched roof, as the thatch will insulate the outer stovepipe somewhat, thereby raising its temperature. The RET project should have this information to be able to provide specific answers when people ask if the chimney will ignite their roof. The recommended procedure for this testing is as follows:

- the chimney should be filled from top to bottom with dry sehalahala;
- a fire lit at the base of the chimney; and
- using four thermometers, two observers (one stationed inside the rondavel and the other outside) should record temperatures every three minutes from 35 centimeters above the base of the inner stovepipe where it exits the stove, 35 centimeters from the bottom of the outer stovepipe, and directly above and below the thatch, as well as observing and noting any changes in smoke density and flow rate.

It is also recommended that the project include a section on chimney care in any publications accompanying RET metal and mud stoves. Basic chimney care includes maintenance (e.g., making sure the chimney cap is firmly in place, etc.) and cleaning. A simple cleaning method is to drop a string or rope down the chimney, tie on a strong clump of sehalahala and pull it through the pipe to loosen any carbon that has built up on the inner walls. This should be done once every two months. Although a lower priority, the preparation of a pamphlet in Sesotho on chimney installation and care would be desirable. In addition, Ms. 'Malenono Lenono should be encouraged to test fuel use with and without dampers in the chimney.

D. Stone Paola

The stone paola shows every sign of becoming a truly local technology--built by villagers from materials at hand, who then teach others how to do so. It was designed by Mr. Savino, a PCV assigned to the RET project, as an outgrowth of his work with a previous ARD stove consultant, Mr. Evans. The stove is large, as it was originally intended for outdoor cooking with big, three-legged pots at institutions, such as schools. (See the drawings on the next page.) The paola prevents the pot from tipping over,

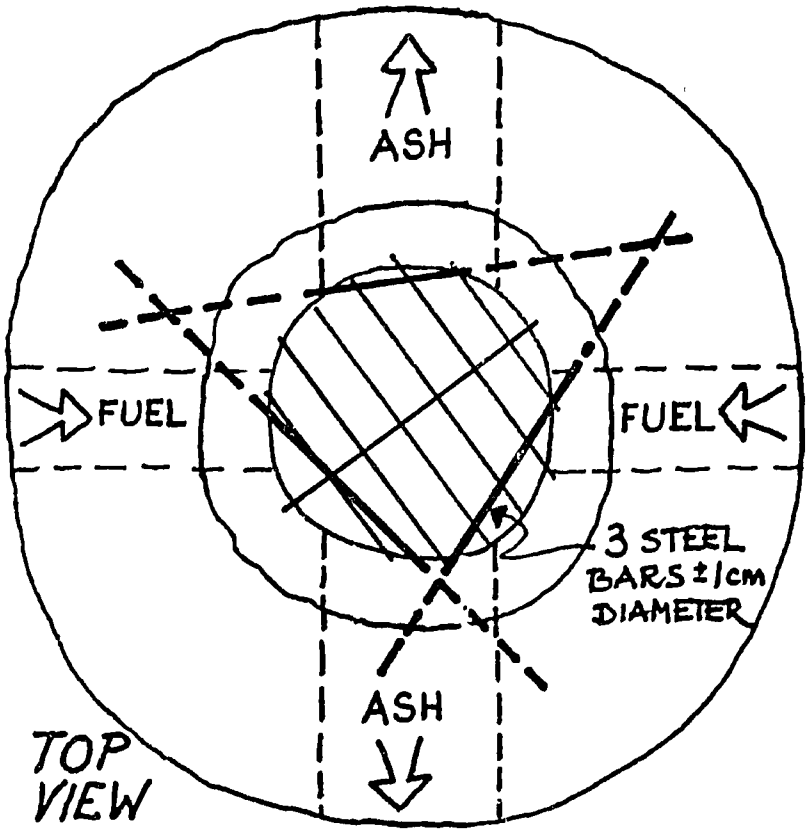

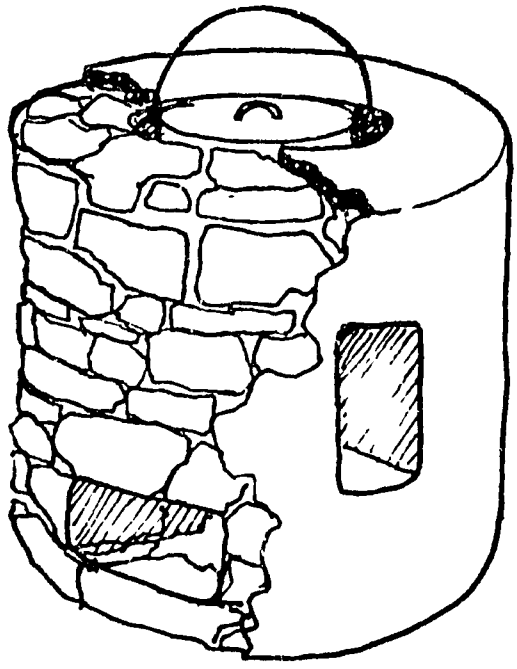

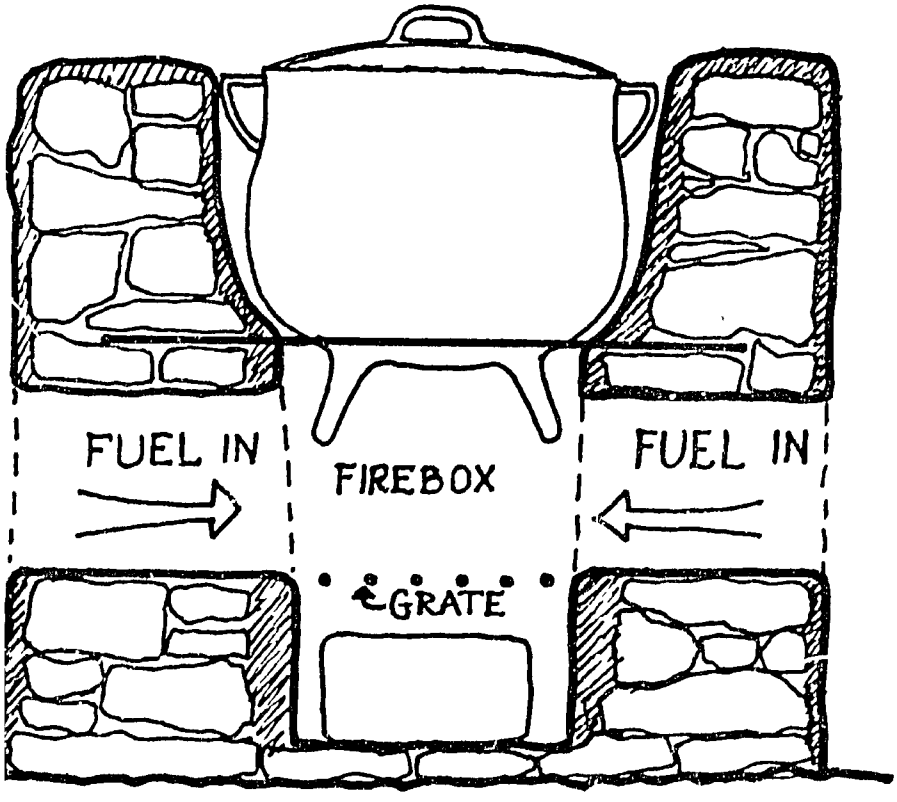

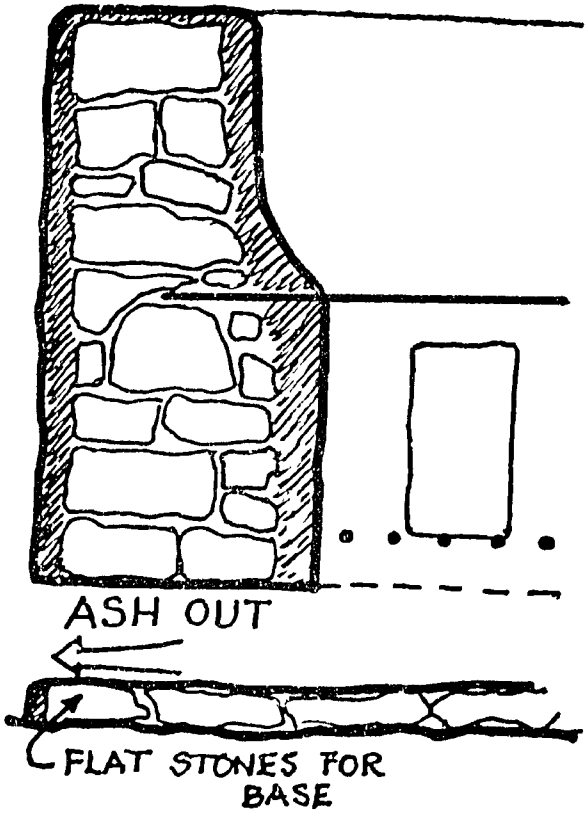

CUTAWAY VIEWS

STONE PAOLA

protects the fire from the wind and channels escaping hot gases close to the pot's sides.

The paola was specifically designed to take advantage of local materials and skills. The Basotho do an excellent job of building stone houses, walls and cattle kraals. Although women are not professional builders, they often help with stone walls and most know how to build with stone. They construct small cross- and C-shaped leifos to protect cooking fires from the wind, and it is a small step from that to building a stone paola.

After testing the prototype Mr. Savino built at the Ha Mohale school, it was recommended that a stone paola be constructed at the Malefiloane workshop for cooking fuel use tests and demonstrations. This paola was completed by the end of September, 1982. In the first series of tests, lesheleshele was prepared using khapane for fuel. Considerable fuel savings--46 percent--were obtained, compared to cooking over an open fire next to a traditional leifo. (See Appendix C for a preliminary analysis of test results.)

Local women were invited to use the stone paola on preschool clinic days during the month of October. Their response was enthusiastic. Many commented to RET staff members that the paola looked like a Basotho object they could make. They took the initiative by specifically requesting courses of instruction in building stone paolas.

The excellent fuel savings and enthusiastic response of local women caused the RET staff to reevaluate their plans for dissemination of the stone paola. A decision was made to disseminate this technology not only to institutions for large-scale cooking, but also to individual villagers, concerned about wind protection for their fires and fuel savings when cooking outdoors.

The first course in stone paola construction was held at the end of October, 1982. It was taught by Mr. Matete, who had learned how to build the paola from Mr. Savino. All three women who completed the course have built at least one paola at home, and one was starting her third during a visit to her home in January, 1983. Within a few weeks of finishing the course, two of the participants had trained other women of their own accord. RET staff at Malefiloane and Mokhotlong have since trained these two women as instructors for courses offered to other villagers.

The project then quickly conducted a series of staff training sessions in stone paola construction at all the RET centers--Malefiloane, Mokhotlong, Khubetsoana and Maseru, and dissemination was begun as soon as practicable. Malefiloane staff members have provided courses in villages requesting them. In Mokhotlong, multiplier audiences have been trained, particularly nutrition extension workers; in turn, they will

conduct courses in villages throughout the district. Staff at Khubetsoana/Maseru have incorporated stone paola training and construction into a six-month, Food-for-Work, pilot project (which also includes grow-holes) at local schools in the Maseru area.

To refine the training program, and ensure that only well built paolas which function properly are disseminated, all the RET centers are cooperating in a follow-up program aimed at paolas constructed during the first phases of dissemination. From meetings with Mr. Klein and staff members from all four RET centers, a stone paola follow-up checklist (see Appendix C) was developed that will be completed for every paola built.

Recommendations

It is recommended that the RET project organize a dissemination program for stone paolas, including:

- continued, specific, technical follow-up on all stone paolas built at schools and homes--to date, 40 to 50 have been constructed, not counting those built at the RET workshops and as part of training courses plus others that have been torn down, which would add at least another dozen to the total;

- when follow-up has been completed for 50 stone paolas, one staff member from each of the four RET centers should meet with Mr. Klein to study the findings and discuss possible changes in training to improve the results--this meeting should take place between the middle and end of March, 1983 (possibly in conjunction with the next Coordinating Committee meeting), and produce specific training goals and a curriculum for trainers;

- all the RET centers should continue to train multiplier audiences with the revised curriculum and follow up on the quality of results obtained when the participants train villagers (see Appendix C for the terms of the stone paola course agreement);

- ARD's public education consultant, Ms. Erika Morgan, has recommended a series of steps to be followed by those who wish to build paolas for others or are interested in becoming trainers, with certification of their competence by the RET project--the specific steps are being revised, but the adoption of such a procedure is recommended;

- each RET center should keep an up-to-date file, by village, of all those certified as builders and trainers--in time, this file should be extensive enough

to assure that anyone who wants a paola or course of instruction can be referred to a local person; and

- training for prospective builders should include a discussion of the price to charge for paola construction--if the builder provides the bars and gra[illegible], M15 (or its equivalent) is suggested, or if the buyer supplies these items, M12; the purchaser should furnish stones, mud, sand and clay, but if the builder must provide these, the price should be raised to around M20--only time will tell whether or not these rates are appropriate, and in the long run, prices may be slightly lower in the mountains and somewhat higher in the lowlands--the RET project should do everything possible to keep the rates fair, yet high enough to enable the new stone paola builders to earn a living wage.

The RET centers at Mokhotlong and Malefiloane should continue to train multiplier audiences, such as nutrition and village health workers. Malefiloane staff members may continue to give courses for villagers and provide further training to those who wish to be certified as builders and trainers. Then, additional training requests from local villages can be referred to these individuals. In the Malefiloane area, there are currently three people who build excellent stone paolas--Ntate Tsietsi of Malefiloane, 'Me MaThapelo of Khutlo-Peli and 'Me Manthakoana of Kholokoe.

The Maseru center should first complete the Food-for-Work pilot project, in which stone paolas are part of the offering for schools. After that, it should shift its focus from direct dissemination to educating a national audience about the fuel-saving capability of stone paolas through its media campaign. In addition, project staff can work with the national headquarters of extension agencies--the ministries of health and agriculture, as well as MINRUDEV, and also the Food and Nutrition Coordinating Office--to increase these institutions' understanding of this technology. Specific training courses may be held for the field and supervisory personnel of these ministries. RET staff members can also work with educational organizations, such as National Curriculum Development Center (NCDC), the Lesotho Distance Teaching Center and School Feeding Program, to further spread information on stone paolas and other selected technologies throughout the country. The stone paola builder's guide should be made available to these groups, and an effort made to incorporate sections on stone paolas in their curricula.

In the Mokhotlong area, brewing joala consumes a major portion of imported wood. RET staff members are currently undertaking a program to build and test large-scale stone paolas for brewers. To date, the first joala-brewing paola has been built in Malefiloane, and testing has begun. A recommended course of action for this testing program is outlined below:

- detailed cooking timeline observations should be made at five different brewing operations in Mokhotlong, all of which purchase wood (see Appendix C for a copy of the joala-brewing timeline observation sheet drawn up by the Mokhotlong staff);

- at least five trial runs of brewing joala on the Malefiloane paola should be conducted to determine whether its average wood consumption is less than the brewing operations observed;

- the Malefiloane paola should be modified, as necessary, to improve its fuel savings when wood, rather than dung, is used--alterations may include eliminating the grate and lower air holes, reducing the flow of air through the grate and/or increasing the height of the walls;

- at least five standardized water boiling tests should be performed after each modification to assess any changes in fuel savings;

- an improved model should be built in Mokhotlong for further testing; and

- comparative tests should be conducted in Mokhotlong--two series of observations should be made in cooperation with local brewers, who are invited to use the RET paola every other time they brew; RET staff should observe them and record data on the quantities brewed and fuel consumed for five brewing sessions on the paola and five with their regular brewing method.

The results from these comparative tests should permit the project to decide whether the joala-brewing paola requires still more modification or dissemination can begin with brewers in the district, starting in Mokhotlong. This work should be coordinated with Khubetsoana workshop. If the paola is modified further, water boiling tests should be performed to assess any changes in fuel efficiency.

Some recommended aids for stone paola dissemination activities include:

- several accurate posters that illustrate the stone paola's internal construction, as well as placement of the pot with the fire underneath and smoke escaping around all sides of the pot, for use not only in stone paola courses, but also introductory talks on RETs;

- small models of stone paolas to be used at demonstrations and introductory talks--Ms. Morgan has constructed one;

- a slide show that details the process of building a stone paola--during this consultancy, a series of 23 slides was made to serve as a basis for this show, but additional pictures of the grate, firebox shape, actual construction by Basotho women and the paola in use are needed; and

- a stone paola builder's guide is currently being prepared by RET staff members and Ms. Morgan--this guide should be published in Sesotho and distributed to all participants in stone paola courses, so that they have a good reference when building a paola for themselves or others; in addition, copies should be made available to all those certified as a trainers by the RET project, so they can give them to anyone they train.

Stone paolas, especially the larger ones (including those made to brew joala), are excellent devices for canning and preserving fruits. Flat-bottomed barrels or large pots can be used with the paola to can produce in quantity, thus making very efficient use of fuel. The RET project should promote this food- and fuel-conserving use of the stone paola through literature, demonstrations and courses, possibly in cooperation with the Food Preservation Division of the Ministry of Agriculture.

If additional funds are obtained to extend dissemination efforts to other regions of Lesotho, week-long courses to instruct stone paola trainers in these areas are recommended. The training should be aimed at nutrition workers, other rural extension agents and personnel from any other voluntary organization whose goal is to teach others. Courses could be held at Farmers' Training Centers (FTCs) or similar facilities. Follow-up visits should be scheduled within a month after the course to assure that the courses being conducted by extension workers are of uniformly good quality.

E. Metal Paolas

Most rural Basotho do the majority of their cooking on a paola--a worn-out bucket or large tin with holes punched all over it. To use, a mixture of dung fuels and brush is placed in the paola, and the fire lit outdoors. When the worst of the acrid smoke has dissipated, the paola is then brought indoors for cooking and/or heating. If the weather is warm and not too windy or rainy, most cooks prefer to work outdoors on a paola or over an open fire.

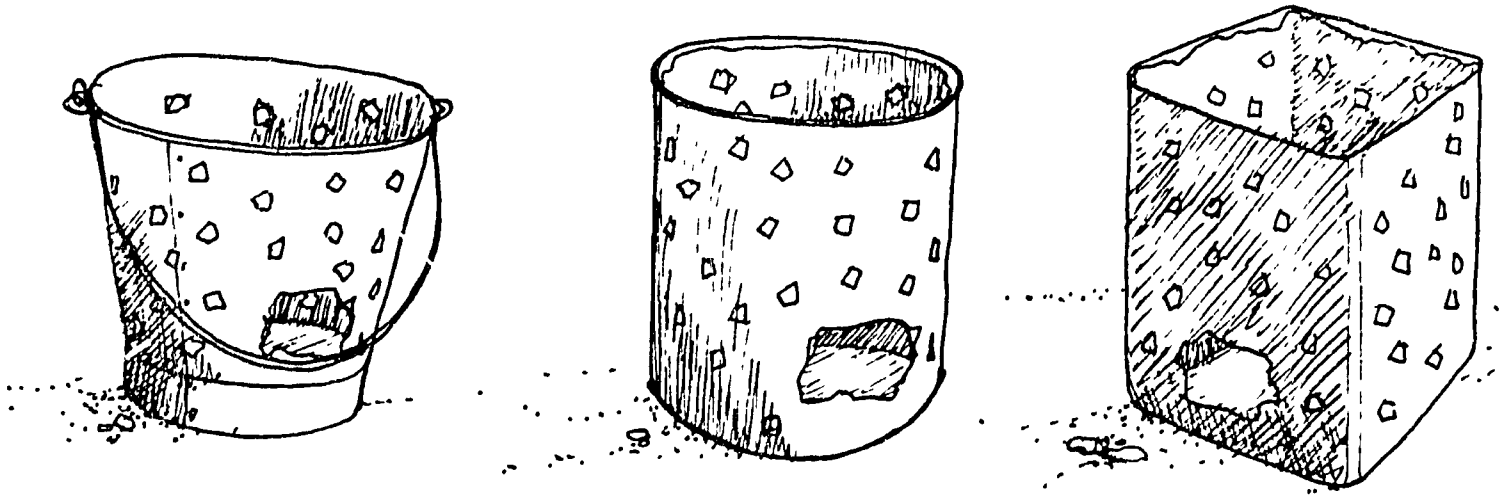

The Thaba Tseka Rural Technology Unit has produced several improved paolas for sale in Lesotho. These paolas were originally conical in shape, although the latest model is square. They have an upper extension which surrounds the pot and directs escaping hot gases to the pot's sides. The extension also serves as a chimney, which increases the flow of air through the fuel and improves combustion. There are one or two openings that allow air to enter and permit the cook to feed in fuel.

The RET project decided to conduct a series of water boiling tests to determine the relative efficiencies of three types of traditional paolas and a variety of improved models. The paolas tested included:

- the three basic traditional shapes with holes punched either all over, halfway or one-third of the way up the paola's sides; and

- several improved models--conical, cylindrical or square, both with and without secondary openings for feeding in fuel.

All were tested with and without grates. To conduct the test, a known quantity of water was brought to a boil and simmered for a set period of time in one pot using a standardized amount of fuel, while a second pot of water was also heated. The percentage of heat utilized (PHU) was calculated to determine the paola's efficiency.

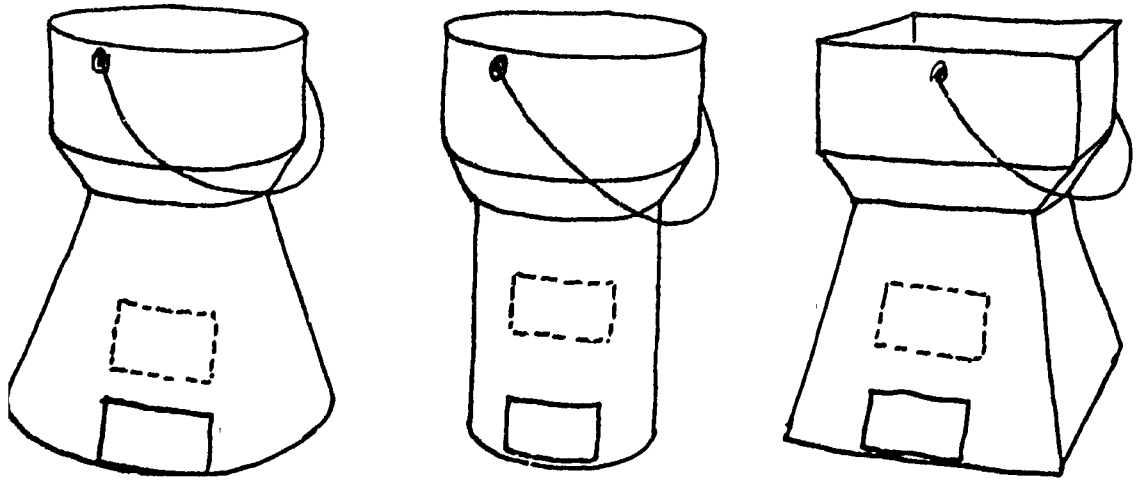

The findings to date show a significant difference in efficiency between the best traditional paolas and the improved models, both with and without grates. However, further testing is needed to determine which of the improved paolas is most efficient. The results thus far are summarized below.

	Number of Tests	Average Efficiency	Avg. Time to Boil--First Pot	Average High Temperature of Second Pot
traditional paolas	22	9.1%	15.1 min.	59°C
improved paolas without grates	18	11.2%	12.2 min.	56°C
improved paolas with grates	18	12.7%	10.4 min.	47°C

As a result of discussions between Ms. Thomas, Mr. Klein and Mr. Thelejane, a decision was made to discontinue testing of the cone-shaped paola because of construction difficulties and a consequent waste of materials. It was further decided to continue with some tests of the cylindrical and square improved paolas.

Recommendations

The next series of tests will measure paolas' radiant heat output. Basotho use traditional paolas to warm themselves, as good radiant heat emanates from the holes punched all over the bucket or tin. The radiant heat tests will be conducted for both square and cylindrical models with two specific characteristics in all possible combinations--a shiny metal versus black outer surface and the presence or absence of holes punched in the firebox.

These tests will be conducted in conjunction with standard cooking efficiency tests, thus permitting an assessment of any change in efficiency caused by the holes in the firebox. If the holes produce no loss in efficiency and increase the radiant heat output, the data can then be compared with results from similar tests of traditional paolas with attached collars. If paolas with collars show comparable cooking efficiencies, the project should concentrate on dissemination of collars for traditional paolas because a collar costs much less than a paola. An added benefit of combining the radiant heat and efficiency tests is that enough data will be gathered to determine whether the cylindrical or square model is the most efficient improved paola.

In mid-April, 1983, the results of this series of tests will be presented to Mr. Howard Geller, another ARD stove consultant, who has worked on portable stove development in Botswana and other countries. At this time, discussions between Mr. Geller, Mr. Klein, Mr. Thelejane and Ms. Lenono should result in the selection of a specific model(s) of improved paola for production and dissemination by the RET project. A final report on the metal paola test results, including the specific procedures used, will be prepared by Mr. Thelejane.

Sheet metal paolas or collars for traditional paolas are highly suitable for production by local artisans based in central towns and large rural villages. Sheet metalworkers are scattered unevenly throughout Lesotho, but the project could train them to make paolas or collars in short courses of two to three days held at regional training centers, such as FTCs. In addition, because of the shortage of metalworkers, the RET project could train interested, unskilled individuals in longer courses of 10 days to two weeks, also through FTCs. To introduce young people to the production of metal paolas or collars, short courses could be taught in various technical schools throughout the country, such as the Lerotholi Training Center, Technical School of Leribe and one run by Lesotho Evangelical Church in Quthing. Skilled artisans in Thaba Tseka and at the Maseru market should also be given instruction in the better paola designs.

To determine the feasibility of such training, the project should begin a pilot training program in the Mokhotlong District. Already, two people with some sheet metal skills, who are interested in learning to make metal paolas, have been identified there. The first course could be small--two to four participants--and held at the RET workshop in Malefiloane.

In each area where training is provided, the project needs to assist artisans in establishing a market for the paolas or collars. This can be accomplished in several ways:

- demonstrations for local groups of extension agents, and through schools and clinics;
- the circulation of pamphlets on the fuel-saving and heating capabilities of improved paolas;
- posters; and
- radio programs.

The RET project is already set up to give demonstrations in Mokhotlong, which may be all that is required there, as it is starting to gain credibility with the dissemination of stone paolas in the area.

F. Retained Heat Cookers

During this six-month consultancy, retained heat cookers (also known as hay- or wonder-boxes) were often demonstrated by RET staff members in Maseru, Mokhotlong and Malefiloane. Two types of cookers were demonstrated:

- one with two stuffed pillows for use with saucepans, and
- another for use with three-legged pots, with one stuffed pillow on top and loose straw in the bottom, so the pot's legs can stick down into the straw, thus allowing the bottom of the pot to nestle in it.

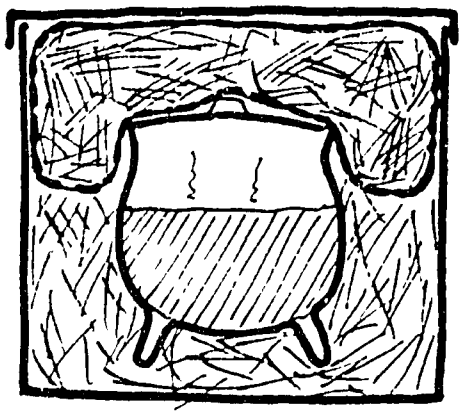

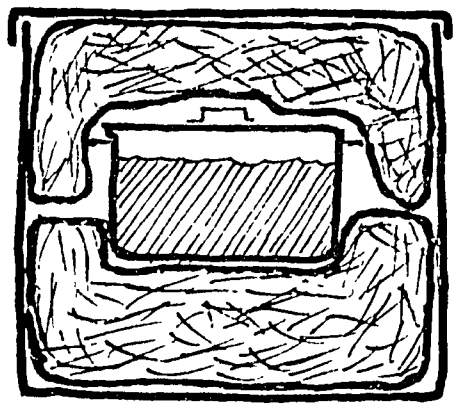

In Malefiloane, retained heat cookers were used regularly by RET staff to steam bread or cook part of the group's lunch, and Ms. Adontsi maintained a record of the cooking done (see Appendix D for a copy of this form). This record shows that the boxes are quite adequate for preparing a variety of traditional foods.

During November and December, 1982, Ms. Adontsi (with the help of Ms. Ramoholi) conducted a series of water boiling tests to compare the performance of several types of retained heat cookers at an altitude of almost 9,000 feet in Malefiloane, where water boils at 91°C. She tested five retained heat cookers:

- two had pillows stuffed with styrofoam beads--one was a commercial wonder-box made in South Africa,
- two had straw-filled pillows--one with short straw in the pillows and the other with long straw; and
- one with mud walls (as opposed to cardboard), loose straw in the bottom and one straw-filled pillow to cover the top of the pot.

As expected, the two retained heat cookers with styrofoam-bead pillows performed best, but the results for the hay-box with

short straw-filled pillows were not much different. (A report on these tests appears in Appendix D.)

Ms. Adontsi concluded that the cooker with short straw-filled pillows worked well enough to warrant dissemination in the mountains. Thus, a series of weekly demonstrations was held during November, 1982 for mothers attending the preschool clinic. Ms. Adontsi has written a series of reports on these demonstrations.

As a result of this experience, the RET staff resolved to make all demonstrations of retained heat cookers as participatory as possible. Those attending demonstrations should sew and stuff the pillows, bring one or more foods to a boil and then put them in the cooker they have made, and eat the food when it is done--the proof is in the eating. Samp (whole-kernel, white corn) and papa are good foods to use in demonstrations; rice is too easy to cook and not as convincing.

One problem with hay-box dissemination has been that the patterns used to make the pillows are too large for the widths of fabric available from stores in the mountains. However, when the size of the pattern was reduced to fit the available cloth, the pillows were too small to cover and insulate anything bigger than a size-two pot. The RET staff is now developing a simpler pattern intended for use with the sizes of material available in the mountains.

A second problem has been variable results when different staff members steamed bread in hay-boxes. After much trial and error, it was discovered that dough with a low moisture content would cook in the hay-boxes; if it was very wet, it did not cook well. Also, beans usually required two turns in the hay-box to get thoroughly done (very hard, white beans are the most common in southern Africa). Further work must be done to determine whether beans can be cooked in one period by leaving them over the fire for perhaps half an hour, rather than five minutes, and then placing them in the hay-box for a longer time (over four hours). Presoaking the beans may also shorten cooking time.

Recommendations

Because of their portability, hay-boxes can easily be demonstrated to a variety of groups. The RET project should continue to demonstrate their use whenever possible, and should seek out special audiences, such as nutrition workers, village health personnel and home economics teachers.

RET staff members in Mokhotlong and Malefiloane are in the process of preparing a pamphlet in Sesotho on the construction and use of retained heat cookers, including recipes that are appropriate for the Basotho diet. All the recipes should be

tested in Malefiloane, Mokhotlong and Maseru to see if cooking times vary at the different altitudes. The project aims to have the pamplet printed by April, 1983, so that it can be used for dissemination efforts beginning then. Fresh straw for stuffing hay-box pillows will be available in April and May after the wheat harvest.

In addition to the pamphlet, RET staff should assign a high priority to identifying and training seamstresses to sew hay-box pillows for sale. One woman in Moeling has expressed an interest in doing so. Others should be located and trained for a day or two in how to cut and sew the pillow covers. Purchasers could stuff the pillows with straw from their own fields.

RET staff should continue to search for suitable containers for retained heat cookers. Currently, cardboard boxes are being promoted, but they do not last long and provide the pillows no protection from mice. A large sheet metal box with a tight lid (similar to food storage boxes built by local tinsmiths) is one possible alternative. It would eliminate the problem with mice, but will raise the cost of a cooker considerably. A sheet metal container could be promoted for those who can afford it, and a cardboard, mud- or rock-walled version for those who cannot.

In Maseru, staff members should concentrate on getting updated material on retained heat cooking into the curriculum of home economics teachers. In addition, the project should focus on working with the Food and Nutrition Coordinating Office (FNCO) to reach extension workers. One example of cooperation with FNCO would be to include a note in the RET pamphlet that commercial wonder-boxes are available from FNCO, including the prices and ordering information, for those who do not wish to make their own cookers. In turn, FNCO could include the pamphlet in their packets for extension workers. RET staff in Maseru could also conduct more demonstrations in the capital for Food-for-Work women, schools, women's groups, the Women's Bureau and even at commercial centers. The project should approach retail outlets about selling commercial wonder-box models.

All the dissemination work needs to be supported by monitored user trials with both rural and urban women. One staff member from each of the four RET centers could teach two local people to use a hay-box in their daily cooking. By working closely with individual women, and dealing with their problems and fears about using a strange technology, RET staff members would learn a great deal about the best ways to approach multiplier audiences and the general public.

Further water boiling tests with retained heat cookers are not necessary, unless other stuffing materials are found. If so, the testing procedure followed by Ms. Adontsi should be employed at Malefiloane's altitude to determine whether the new material works as well as styrofoam beads or short straw. If the

performance of the new material is comparable or better, its use should be promoted. In any case, all the RET centers should continue to maintain use records for their retained heat cookers.

APPENDIX A

Cooking Test Forms and Procedures

	Page
Cooking Timeline Observations	A-1
Cooking Test Procedure for Indoor Stove Fuel Use -- Two Pot-Hole Stoves	A-3
Cooking Test Procedure for Indoor Stove Fuel Use -- One Pot-Hole Stoves	A-4
Cooking Test Data Sheet	A-5
Outline of the User Test Agreement	A-7
Background Data for Cooking Fuel Use Tests	A-8
Daily Fuel Use Record Sheet	A-11
Final Stove User Questionnaire	A-14

COOKING TIMELINE OBSERVATIONS - REF PROJECT DATE _____

VILLAGE _____ COOK _____ OBSERVER _____

POT SIZES	FOOD COOKED	AMOUNT	REMARKS
Pot 1 _____			
Pot 2 _____			

FUEL USED	DRY/WET	AMOUNT TO START	ADDED	AMOUNT LEFT	TOTAL
Patsi					
Khapane					
Bokuluba					
Lisu					

COOKING DEVICE USED - sketch and describe in detail

FUEL LOADING PATTERN - describe

Was device used indoors ___ or outdoors ___?

If outdoors, was it used with leifo ___ or windscreen ___? Sketch and note location of cooking device and wind direction.

Was wind light ___, medium ___, strong ___? Was it variable ___?

For how many people was the food cooked? _____ What else will be served with the meal? _____

Was this a special occasion? Yes ___/No ___. If yes, what? _____

BRIEFLY DESCRIBE THE COOKING PROCESS OBSERVED:

45

COOKING TIMELINE OBSERVATIONS Type of food cooked _____

STOKING	DESCRIPTION OF FIRE/SMOKE	TIME	POT 1 & lid	POT 2 & lid
		1		
		2		
		3		
		4		
		5		
		6		
		7		
		8		
		9		
		10		
		11		
		12		
		13		
		14		
		15		
		16		
		17		
		18		
		19		
		20		
		21		
		22		
		23		
		24		
		25		
		26		
		27		
		28		
		29		
		30		
		31		
		32		
		33		
		34		
		35		
		36		
		37		
		38		
		39		
		40		
		41		
		42		
		43		
		44		
		45		
		46		
		47		
		48		
		49		
		50		
		51		
		52		
		53		
		54		
		55		
		56		
		57		
		58		
		59		
		60		

COOKING TEST PROCEDURE FOR INDOOR STOVE FUEL USE OF TWO POT-HOLE STOVES -- PAPA AND MOROHO

1) Weigh fuel to start--no limit on patsi and lisu, not more than 300 gms khapane.

2) Load fuel in stove--record loading pattern.

3) Measure two liters of water into 23-cm saucepan* and take temperature of water--weigh and set aside 1,000 gms phoofo.

4) Weigh out 700 gms moroho, and cut, wash and put in second 23-cm saucepan*--add oil, salt and curry to taste.

5) Place pots on stove and start fire using best method for stove (record procedure) and note time (papa pot over firebox).

6) Record chimney and firebox temperatures every three minutes.

7) Record the following at start of test: ambient temperature and wind conditions.

8) Record the following as needed: when stoking occurs for each fuel, changes in fire/smoke, when pot reaches boil, when phoofo is added, stirring, when pots are taken off and subsequent pots put on.

9) When first pot reaches boil, remove lid and add 1,000 gms phoofo.

10) DO NOT ADD FUEL AFTER PHOOFO IS ADDED TO WATER.

11) When papa has cooked 10 minutes from time phoofo was added, check for doneness and remove from fire--if not yet done, let it cook for another five minutes and remove from fire (if not cooked in 15 minutes, scrub test and save sheet).

12) When moroho is cooked (to cook's liking), remove from fire.

13) When first pot to finish cooking is removed from fire, place third saucepan* with three liters water over that pot-hole and begin to record temperature rise every three minutes. If third pot is over firebox at this point, leave it there. If not over firebox, move it to that position as soon as the papa is cooked. Continue to record temperature every three minutes. When temperature does not rise over a three minute period (or if it falls), <u>the test is over;</u> record final temperature of water.

14) Record weight of leftover fuel and subtract from original weight to find amount of fuel used.

*If stove takes three-legged pots, use size four for papa, two for moroho and three for water.

COOKING TEST PROCEDURE FOR INDOOR STOVE FUEL USE OF ONE POT-HOLE STOVES -- PAPA AND MOROHO

1) Weigh fuel to start, no limit on patsi and lisu, not more than 100 gms khapane for Little Prince and Zip Stove.

2) Load fuel in stove--record loading pattern.

3) Measure two liters of water into 23-cm saucepan and take temperature of water--also weigh and set aside 1,000 gms phoofo.

4) Weigh out 700 gms moroho, and cut, wash and put in second 23-cm saucepan--add oil, salt and curry to taste. Set aside.

5) Start fire according to best method for stove (record procedure) and note time.

6) Place first 23-cm saucepan over firebox and record time.

7) Record the following every three minutes: chimney and firebox temperatures.

8) Record the following at start of test: ambient temperature and wind conditions.

9) Record the following as needed: when stoking occurs for each fuel, changes in fire/smoke, when pot reaches boil, when phoofo is added, stirring, when pot is taken off and subsequent pots put on.

10) When pot reaches boil, remove lid and add 1,000 gms phoofo.

11) When papa has cooked 10 minutes from time phoofo was added, check for doneness and remove from fire--if not yet done, let it cook for another five minutes and remove from fire (if not cooked in 15 minutes total, scrub test and save sheet).

12) When papa is cooked, put moroho on to cook and record time.

13) Record the following as needed: when stoking occurs for each fuel, changes in fire/smoke, stirring, when pot is taken off and subsequent pot put on.

14) When moroho is cooked (according to preference of cook), remove from fire.

15) When moroho is removed, DO NOT ADD MORE FUEL. Place third saucepan with three liters of water over fire and record temperature rise every three minutes. When temperature does not rise over a three minute period (or if it falls), <u>the test is over;</u> record final temperature of water.

16) Record weight of leftover fuel and subtract from original weight to find amount of fuel used.

COOKING TEST DATA SHEET - RET PROJECT TEST NUMBER _____

WORKSHOP _____ STOVE _____

COOK _____ OBSERVER _____ DATE _____

POT SIZES	FOOD COOKED	AMOUNT	REMARKS
Pot 1 _____			
Pot 2 _____			
Pot 3 _____			

FUEL USED	DRY/WET	AMOUNT START	ADDED	AMOUNT LEFT	TOTAL
Patsi					
Khapane					
Bokoluba					
Lisu					

FUEL LOADING PATTERN -- describe

WIND -- light ___ variable ___

medium ___ no wind ___

strong ___ wind direction fro _____

AMBIENT TEMPERATURE (at start of test) _____

WATER TEMPERATURE (at start of test) _____

TIME TEST STARTED _____

REMARKS:

49

Type of food cooked _____

STOKING	DESCRIPTION OF FIRE/SMOKE	TIME	POT 1 & lid	POT 2 & lid
		1		
		2		
		3		
		4		
		5		
		6		
		7		
		8		
		9		
		10		
		11		
		12		
		13		
		14		
		15		
		16		
		17		
		18		
		19		
		20		
		21		
		22		
		23		
		24		
		25		
		26		
		27		
		28		
		29		
		30		
		31		
		32		
		33		
		34		
		35		
		36		
		37		
		38		
		39		
		40		
		41		
		42		
		43		
		44		
		45		
		46		
		47		
		48		
		49		
		50		
		51		
		52		
		53		
		54		
		55		
		56		
		57		
		58		
		59		
		60		

Outline of the User Test Agreement

1. The user essentially borrows the stove from the RET project and uses it for two months at no charge.

2. In exchange, the user agrees to let the project monitor the household's cooking and heating fuel use for a total of 14 days, although this may not be a continuous period.

3. If the user wishes to purchase the stove at the end of two months, it can be bought for the cost of the materials alone--about M35 for metal stoves and M15 for mud stoves.

4. If the user decides not to keep the stove, the RET project will remove it and repair any damage to the dwelling.

5. An individual contract will be drawn up in Sesotho for each stove loaned out for user testing.

BACKGROUND DATA FOR
COOKING FUEL USE TESTS
(numbered questions same as those in RET VILLAGE ENERGY SURVEY)

Village _____
Date _____
Interviewer _____

Stove type _____
Date installed _____

4.1 Name of household head _____

4.2 Name of person being interviewed _____

4.3 Number of household possessions used for cooking, heating, lighting etc.

- [ ] iron tripod
- [ ] mpnola (bucket__/ old 20 lt tin__/)
- [ ] paraffin pressure stove
- [ ] paraffin wick stove
- [ ] coal stove
- [ ] gas stove
- [ ] paraffin heater
- [ ] flat iron for pressing clothes
- [ ] radio
- [ ] cassette player
- [ ] iron pots with legs (sizes _____)
- [ ] flat iron pots (sizes _____)
- [ ] kettle
- [ ] saucepans (small__/medium__/large__/)
- [ ] frying pan
- [ ] empty tins (round__/ square__/)
- [ ] big drum for cooking beer
- [ ] hand grinding mill, of iron
- [ ] paraffin lamp (glass__/ metal__/)
- [ ] flashlight or torch

4.4 For how many people do you cook each day ____?

4.6 How many buckets of water does the household use per day_____?
What size are the buckets _____(litres) or are they (small/medium/large)?

4.8 How many times per week do you iron clothes?_____ How long each time?_____
With what fuel and stove do you heat the iron?_____

4.9 At night, how many hours do you light the house?_____
On a typical night, how many candles are lit?_____ How many lamps?_____

4.10 How often do you brew beer per month? _____

4.11 How often per month is it for the family only?_____ and how often for sale?____

4.12 What amount do you usually brew? _____(number of tins) _____(in litres)

4.15 Who usually collects patsi (shrubs)? _____
Who usually collects dry cow dung? _____

4.16 Do you ever buy shrubs? _____ Or buy dung?_____From whom?_____
Do you ever sell shrubs? _____ Or sell dung?_____ Where?_____

52

4.13 Record fuel which is normally used, exact amounts used last week, and details of the way each type of fuel is collected or purchased.

CHECK IF EVER USED	TYPE OF FUEL	AMOUNT USED LAST WEEK	IF IT IS COLLECTED			IF IT IS PURCHASED		
			DISTANCE	TIME	FREQ	PLACE	DISTANCE	PRICE
	lisu							
	mapharoa							
	khapane							
	bokuluba							
	sehalahale							
	other shrubs							
	local trees							
	Natal trees							
	crop stalks							
	maize cobs							
	other							
	paraffin							
	coal							
	propane gas							
	candles							
	batteries							

4.14 How does the use of fuel differ at different seasons of the year? _____

_____

_____

4.31 Number of domestic animals owned by the household:

TYPE OF ANIMAL	THOSE STAYING HOME ALL YEAR LONG	THOSE AT CATTLE POST DURING SUMMER	TOTAL
cattle			
sheep			
goats			
horses			
donkeys			
pigs			
chickens			
others			

4.23 Number of household members: present _____, absent_____, total_____.

4.24 Number of

___	rondavels
___	thatched rectangular houses
___	houses with iron roofs
___	cattle kraals

4.25 What are the main sources of household income, listed in order of importance?

(1) _____

(2) _____

(3) _____

(4) _____

4.26 Which members of the family have participated in Food-for-work programs during the past year, and for how many working periods (of 15 days each?)

(1) _____

(2) _____

(3) _____

(4) _____

List all the people who eat what you cook on a regular basis.

NAMES MARITSO	SEX M/F	RELATION TO HLD HEAD KAMANO	MARITAL STATUS BOEMO LENYALONG	AGE LILEMO	EDUC THUTO	EMPLOYMENT (CHELLIL) MOSEBETSI	OTHER ACTIVITIES O ETSANG HAPE
1.		Hld head					
2.							
3.							
4.							
5.							
6.							
7.							
8.							
9.							
10.							

DAILY FUEL USE RECORD SHEET

Name of village _____
Name of interviewer _____
Name of Cook _____
Date of visit _____

AMOUNT OF FUEL WEIGHED OUT ON PREVIOUS VISIT	AMOUNT OF FUEL REMAINING IN PILE	AMOUNT OF FUEL USED 1 day ___ 2 days ___
Patsi (shrubs)		
Patsi (willow, poplar)		
Field dung (Khapane / bokoluba)		
Kraal dung (lisu / mapharoa)		
Paraffin (veigh stove)		
Other(s)		

FIRST DAY

Since I was last here what foods did you cook, at what time of day, with what fuel(s), and with what kind of stove? (Use back of page for second day.)

TIME	FOOD OR COOKING WATER	POT SIZE	AMT WATER	FUELS	STOVE	FOR NUMBER OF PEOPLE
Morning						
Midmorning, Midday						
Afternoon						
Night						

From which piles did you take the fuel for cooking? Weighed____ Unweighed____

Since I was last here how much water did you heat, for purposes other than cooking, with what fuel(s) and in which stove? (Use back of page for second day.)

TIME	PURPOSE	AMOUNT	FUELS	STOVE
Morning				
Midday				
Afternoon				
Night				

From which piles did you take the fuel for water heating? Weighed____ Unweighed____

If the woman got fuel for cooking or water heating from anywhere else, the measurements for the day are invalid and you will have to add another day to the observation period.

Only use if two days of fuel are to be weighed.

SECOND DAY

Since I was last here what foods did you cook, at what time of day, with what fuel(s), and with what kind of stove?

TIME	FOOD OR COOKING WATER	POT SIZE	AMOUNT WATER	FUELS	STOVE	FOR NUMBER OF PEOPLE
Morning						
Midmorning, Midday						
Afternoon						
Night						

From which piles did you take the fuel for cooking? Weighed____ Unweighed____

Since I was last here how much water did you heat, for purposes other than cooking, with what fuel(s) and in which stove?

TIME	PURPOSE	AMOUNT	FUELS	STOVE
Morning				
Midday				
Afternoon				
Night				

From which piles did you take the fuel for water heating? Weighed?____ Unweighed?____

Use this space for any other comments the people make about the new stove:

56

BAKING IN POLATA

Since I was last here, did you bake bread in a polata? Yes ___ No ___

If yes, how many times? _____

If yes, how did you start the fuel burning? _____

From which pile did you take the fuel? _____

FUEL FOR SPACE HEATING ONLY

Since I was last here, did you put fuel in your stove ___ or traditional paola ___ or open fire ___ just to heat or light your house? Yes (indicate which) ___ No ___

For about how long did you heat or light your house? _____

From which pile did you take the fuel? _____

Did you get fuel from anywhere else? Yes ___ No ___, If yes, where?

If the woman took fuel from unweighed piles or from anywhere else, the measurements for the day are invalid and you will have to add another day to the observation period.

FUEL FOR HEATING IRON ONLY

Since I was last here did you iron any clothes? Yes ___ No ___

From where did you get the fuel? _____
(Should be from unweighed piles)

BREWING

Since I was last here did you brew joala? Yes ___ No ___

From where did you get the fuel? _____
(Should be from unweighed piles)

If the woman took fuel from the weighed piles for ironing or brewing joala, the measurements for the day are invalid and you will have to add another day to the observation period.)

How many people have been eating here regularly since I was last here? _____

Did you have any guests? How many? _____ and when? _____

Describe the weather in this fuel measurement period:

1) Sunny _____ Cloudy _____ Rainy _____

2) No wind ___ Some wind ___ Much wind ___

3) Warm _____ Medium _____ Cold _____

Explain other weather details _____

FINAL STOVE USER QUESTIONNAIRE - RET

Village _____ Name of Cook _____

Name of Observer _____ Date of visit _____

Type of stove used _____

Does the stove cook well the foods that you normally prepare?
Yes ___ No ___

If no, which foods do not cook well on the stove?

Do you think the stove uses more fuel ___ or less fuel ___ than your other method of cooking?

Do you find the stove easy to use? Yes ___ No ___

What do you like about how it works?

Do you have problems using the stove? Yes___ No ___ If yes, what kinds of problems?

Not enough heat _____
Too much heat _____
Didn't cook second pot _____
Pots didn't fit well_____
Hard to control fire_____
Hard to add fuel_____
Didn't burn fuel well_____
Smoke escaping into room _____
Hard to clean out _____
Difficulties with door/front damper _____
Difficulties with ash catcher/air control _____
Difficulties with chimney_____
People/kids getting burned _____
Other _____

Do you have to purchase ___ or collect ___ more fuel ___ or less fuel ___ when cooking with the stove?

What do your friends say about the stove?

Do you know other people who want a stove like this one? Yes ___ No ___
If yes, please give names and where they live.

Do you wish to purchase the stove? Yes ___ No ___

If you do not wish to purchase it, why not?

Purchase made: date _____ amount _____

Stove removed from home: date _____

58

APPENDIX B

Sizing of Pot-Holes for RET Metal Stoves

All three models of the RET metal stove were designed to accommodate three-legged pots of sizes two, three and four--two size-four pots can sit side by side on the Model 3. These sizes were chosen based on two sets of independent data collected by RET staff members.

RET staff surveyed households in four villages near Malefiloane to determine how often each type and size of pot was used. From this data (see the next page), specific information about which pots were used for daily cooking could be extracted. Most of the 88 households surveyed used two sizes of pots on a daily basis, and 17 regularly used only one pot. Of the 162 pots used daily by all households, 135 or 83.3 percent were pitsas (three-legged pots); 23 or 14.2 percent, saucepans; and four or 2.4 percent, polatas (dutch ovens). It is clear that Basotho living in the mountains still rely on pitsas in their daily cooking--all but six households used at least one three-legged pot on a daily basis, and 80 homes used a size four or smaller. Of the three-legged pots in regular use, 64 percent are sizes two to four.

The popularity of three-legged pots of sizes two to four is confirmed by data from the Lesotho Village Energy Survey Report, which tabulated ownership of various sizes of cast-iron pots for the 148 households surveyed. The most common pot size was two, followed by sizes four, three, six and one. Of the 427 pots owned by these households, 241 or 56 percent were size four or smaller (see the chart on the following page).

It is extremely difficult to design a stove that can accommodate various sizes of three-legged pots with rounded bottoms. Thus, based on the frequency data discussed above, a decision was made to design metal stoves for the most common pot sizes--two to four. For comparative purposes, the mud stoves built and tested were also designed to handle pots of sizes two to four.

POT SIZES IN DAILY USE IN FOUR VILLAGES IN MOKHOTLONG (near Malefiloane)[1]

	SAUCEPANS	3 LEGGED POTS less than 1	1	1½	2	2½	3	4	7	8
SAUCEPANS	5/1*									
3 LEGGED POTS										
less than 1		3/4*								
1		3/4	1*							
1½	2	3/4		1*						
2	2	1/2	3	1	2/4*					
2½										
3	1	3/4	3		2	1	1*			
4	3	(2)1/4	2	1	4		1	4*		
5		1/4			2					
6	1	3/4	3	1	1		1	1		
7					3				1*	
8	1		5	1	1	1	2			
9					1					
10			1		1		1	1		
POLATAS										
6	1									
7				1						
8	1									1

[1] If more than two pots used daily by a household only the largest and smallest are entered on this chart.

*only one pot in daily use in the household

TOTAL NUMBER OF POTS EACH SIZE

SAUCEPANS	3 LEGGED POTS less than 1	1	1½	2	2½	3	4	5	6	7	8	9	10	POLATAS
23	9	19	9	30	2	14	19	3	9	4	12	1	4	4

SAUCEPANS = 23
3 LEGGED = 135
POLATAS = 4

Tabulation by Margaret Thomas of data supplied by Agnes Adontsi, Alina Ramoholi, Doug McLean and Mike Savino.

60

OWNERSHIP OF VARIOUS SIZES OF CAST IRON POTS

AS REPORTED BY 148 HOUSEHOLDS IN MOKHOTLONG DISTRICT

OF LESOTHO

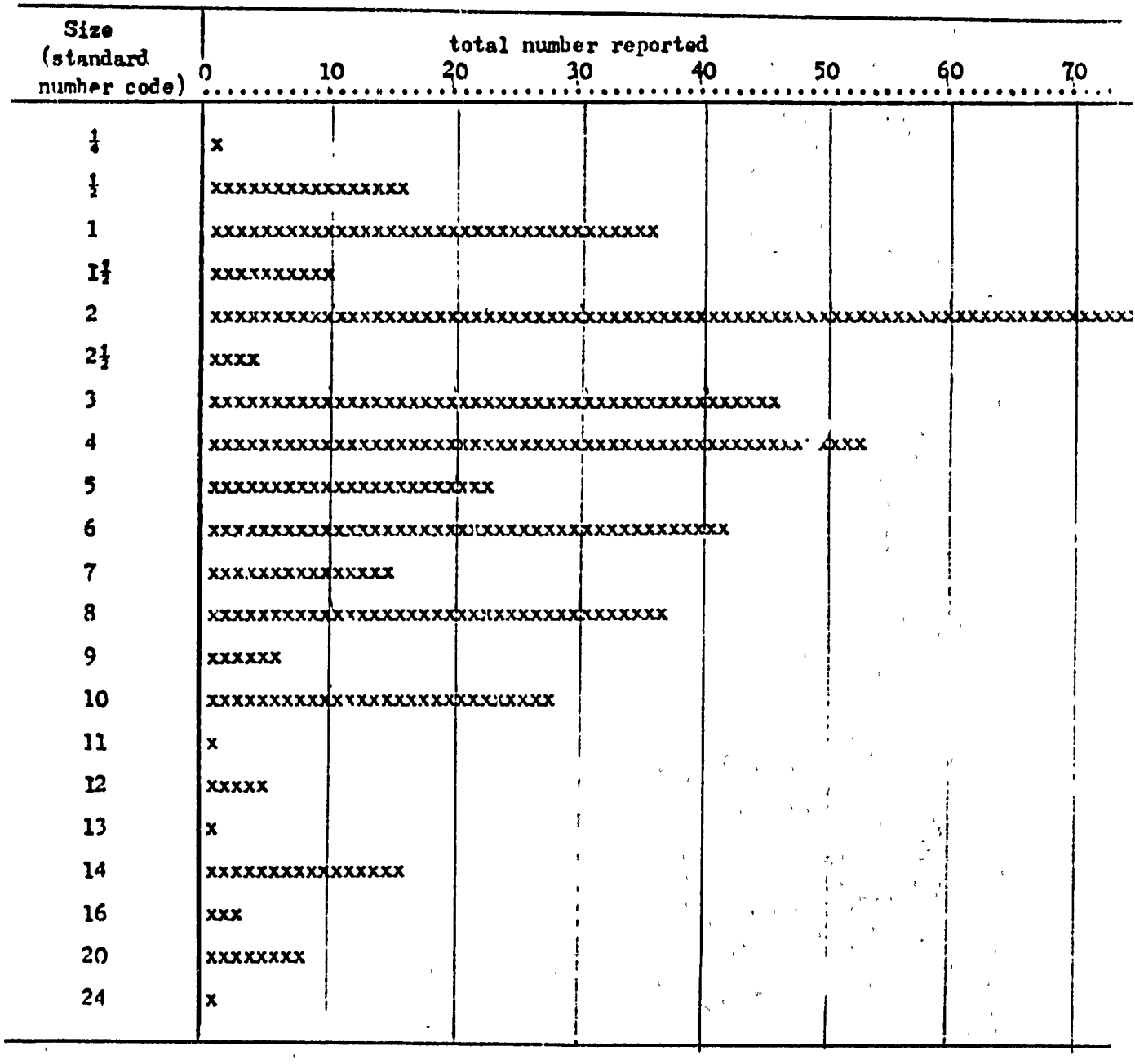

Based on data collected in the Village Energy Survey, March - May, 1982.
Chart by J. Gay

61

APPENDIX C

Supplement on Stone Paolas

	Page
Preliminary Analysis of Stone Paola Test Results	C-1
Procedure for Lesheleshele Cooking Test on Stone Paola	C-2
Procedure for Bohobe ba Metsi Test on Stone Paola	C-3
Fuel Use Comparisons -- Stone Paola and Leifo with Number 8 Pots	C-4
Stone Paola Test Results (Incomplete)	C-5
Stone Paola Test Series Check Sheet	C-7
Stone Paola Follow-up Checklist	C-9
Stone Paola Course Agreement	C-11
Sesotho Stone Paola Course Agreement	C-12
Joala Brewing Timeline Observations	C-13

Preliminary Analysis of Stone Paola Test Results

The first series of cooking tests (lesheleshele in a size-eight pot) was conducted with a stone paola and a traditional, cross-shaped leifo for comparison. The results showed a 46 percent savings for dung fuels (khapane and bokoluba). Many of these tests were performed by village women who were using the stone paola for the first time. Thus, the fuel savings are probably close to what can be expected when the paola is used daily at home. Additional tests using patsi (brush) only and lisu (kraal dung) are now being performed to determine savings with these fuels.

A second series of tests (bohobe ba metsi), in which a loaf of bread is steamed inside a pot, has only been partially completed. Fuel savings relative to cooking with a traditional leifo cannot be calculated at this time because the tests with the leifo have not yet been completed. Regardless, it should be noted that fuel savings can be achieved by:

- steaming bread in a smaller pot and reducing the cooking time; and
- using a stone paola in conjunction with a hay-box, thereby shortening the cooking time on the paola even more.

For example, one loaf steamed an average of one hour and 33 minutes in a size-eight pot requires an average of 3,066 grams of khapane and 508 grams of patsi. A loaf steamed an average of 35 minutes in a size-four pot needs only an average of 1,882 grams of khapane and 194 of patsi--a fuel savings of 42 percent. Finally, a loaf steamed an average of 18 minutes in a size-four pot and then transferred to a hay-box uses an average of 1,228 grams of khapane and 178 grams of patsi. This is a 32 percent savings compared to the same size pot used without the hay-box, and a 61 percent savings over steaming the bread in a size-eight pot.

Procedure for Lesheleshele Cooking Test on Stone Paola

1) Weigh out fuel, patsi and khapane. Record.

2) Load fuel in firebox--patsi on the bottom, khapane on top.

3) Measure water into pot. For a size-eight pot, use 12 liters water; for size four, six liters. Take water temperature.

4) Place pot in paola. Light fire through feed-hole.

5) Record the following: time fire lit, condition of fire/smoke every three minutes, when each type of fuel is added, time water boiled, time phoofo is added (see steps six and seven), stirring, when sugar and tartaric are added, and when cooked.

6) Measure out a known quantity of phoofo, but let person cooking choose how much to use. Weigh what is left and record amount used.

7) Measure out one to two liters of water to mix phoofo in before adding to boiling water. If cook uses less, measure what is left. Record amount actually used.

8) When lesheleshele is cooked, remove from paola and place second pot* with three liters of water on paola. Record temperature every three minutes until it stops rising.

9) DO NOT ADD FUEL AFTER LESHELESHELE IS TAKEN OFF PAOLA.

10) When lesheleshele is removed, weigh leftover fuel and record.

*For the number eight paola, the second pot should be a size six; for number four, a size three.

Procedure for Bohobe ba Metsi Test on Stone Paola

1) Prepare bread dough, amount based on one cup of water, and let rise.

2) Weigh patsi and khapane, and load paola with patsi on the bottom and khapane on top of it. Record fuel weights.

3) Pour one liter of water into bottom of pot.

4) Place risen bread in pot on a bed of straw or tripod.

5) Place pot in paola and light fire. Record time lit.

6) Record the following: descriptions of fire/smoke, when water reaches boil, when additional water is added and how much, when each type of fuel is added, when bread is checked and baked.

7) When bread is baked, remove from the paola and place a second pot* with three liters of water on. Record temperature every three minutes until it stops rising.

8) DO NOT ADD FUEL AFTER BREAD IS TAKEN OFF PAOLA.

9) When bread is removed, weigh leftover fuel and record.

*For a number eight paola, the second pot should be a size six; for a number four, a size three.

FUEL USE COMPARISONS: STONE PAOLA AND LEIFO WITH NUMBER 8 POTS
SERIES 1, Test A

OCK PAOLA FUEL USE RECORD

ate	Water	Min. to Boil	Amts. Added Water & Phoofo	Min. Cooked	Patsi	Khapane/ Bokoluba	Total
6/8 *	12 l.	21	3820 gms Phoofo 2 l. water	43	460 gms	2840 gms	3300 gms
7/9	12 l.	23	(simulation)	20	220 gms	3620 gms	3840 gms
1/9	12 l.	28	2500 gms Ph. 2½ l. water	19	600 gms	3300 gms	3900 gms
3/9	12 l,	20	1500 gms Ph 2½ l. water	19	370 gms	2950 gms	3320 gms
/10	12 l.	28	(simulation)	47	450 gms	3400 gms	3850 gms
/10	12 l.	27	1600 gms Ph 3½ l. water	20	200 gms	4200 gms	4400 gms
verages		24.5		28	383 gms	3385 gms	3768 gms

EIFO FUEL USE RECORD

5/8 *	12 l.	26	3820 gms Ph 2 l. water	40	440 gms	6000 gms	6440 gms
4/9	12 l.	29	1450 gms Ph 2½ l. water	15	400 gms	7840 gms	8240 gms
/10	12 l.	25	(simulation)	26	320 gms	6000 gms	6320 gms
/10	12 l.	23	(simulation)	22	500 gms	6500 gms	7000 gms
/10	12 l.	21	(simulation)	20	500 gms	6700 gms	7200 gms
verages		24.8		24.6	432 gms	6608 gms	7040 gms

$\frac{768 \text{ gms}}{040 \text{ gms}} - 1 = 46$ percent fuel savings over open fire in leifo with ck paola

Number 10 pot, Na Mohale school

66

STONE PAOLA TEST RESULTS (INCOMPLETE)

SERIES 1, Test D — Bohobe ba metsi - 1 loaf (steamed bread)
STONE PAOLA SIZE 8

Date	Amount	Time Cooked	Fuel Used Patsi	Fuel Used Khapane
2/10	1 loaf	1 hr 45 min	700 g	2600 g
20/10	1 loaf	1 hr 45 min	500 g	4100 g
29/10	1 loaf	1 hr 20 min	300 g	3000 g
12/11	1 loaf	1 hr 45 min	580 g	3000 g
21/12	1 loaf	1 hr 12 min	460 g	2630 g
AVERAGE	1 loaf	1 hr 33 min	508 g	3066 g

SERIES 2, Test A — Lesheleshele with 6 liters water to start
STONE PAOLA SIZE 4

Date	Water	Time to Boil	Amounts Added	Time til Cooked	Fuel Used Patsi	Fuel Used Khapane
16/11	6 l.	32 min	1.5 liters water 1000 g phoofo	20 min	100 g	1850 g
16/11	6 l.	28 min	1.5 liters water 1000 g phoofo	18 min	200 g	2400 g
7/12	6 l.	20 min	1.5 liters water 1000 g phoofo	9 min	300 g	1720 g
9/12	6 l.	20 min	1 liter water 300 g phoofo	15 min	380 g	1700 g
AVERAGE	6 l.	25 min	1.5 liters water 825 g water	15.5	245 g	1918 g

67

STONE PAOLA TEST RESULTS (INCOMPLETE)

SERIES 2, Test B — Bohobe ba metsi - 1 loaf (steamed bread)

STONE PAOLA SIZE 4

Date	Amount	Time Cooked	Fuel Used Patsi	Fuel Used Khapane
8/12	1 loaf	51 min	130 g	2250 g
9/12	1 loaf	33 min	300 g	2300 g
13/12	1 loaf	30 min	200 g	1620 g
15/12	1 loaf	30 min	180 g	1540 g
18/12	1 loaf	30 min	160 g	1700 g
AVERAGE	1 loaf	34.8 min	194 g	1882 g

SERIES 2, Test C — Bohobe ba metsi - 1 loaf (steamed bread)

STONE PAOLA SIZE 4 plus HAYBOX

Date	Amount	Time Cooked	Fuel Used Patsi	Fuel Used Khapane
24/12	1 loaf	13 min	200 g	1350 g
28/12	1 loaf	20 min	170 g	1200 g
29/12	1 loaf	20 min	140 g	[illegible] g
[illegible]/1	1 loaf	20 min	200 g	[illegible] g
AVERAGE	1 loaf	18.3	178 g	[illegible] g

6A

STONE PAOLA TEST SERIES CHECK SHEET

SERIES 1 - Size 8 Paola	Stone Paola	Leifo
A - Lesheleshele 12 liters khapane & bokoluba	1 - done 2 - done 3 - done 4 - done 5 - done	1 - done 2 - done 3 - done 4 - done 5 - done
B - Lesheleshele 12 liters patsi	1 - done 2 - done 3 -	1 - done 2 - done 3 -
C - Lesheleshele 12 liters lisu	1 - done 2 - done 3 -	1 - 2 - 3 -
D - Bohobe ba metsi 1 loaf khapane	1 - done 2 - done 3 - done 4 - done 5 - done	1 - 2 - 3 - 4 - 5 -
SERIES 2 - Size 4 Paola		
A - Lesheleshele 6 liters khapane	1 - done 2 - done 3 - done	1 - 2 - 3 -
B - Bohobe ba metsi 1 loaf khapane	1 - done 2 - done 3 - done 4 - done 5 - done plus Haybox	no test
C - Bohobe ba metsi 1 loaf, plus use of Haybox khapane	1 - done 2 - done 3 - done 4 - done 5 -	no test

STONE PAOLA TEST SERIES CHECK SHEET (continued)

SEPIES 3 - Size 4 Paola--to test firebox height _

A - water boiling test 1 -
2 -
3 -
khapane 4 -
firebox height 20 cm 5 -

B - water boiling test 1 -
2 -
3 -
khapane 4 -
firebox height 30 cm 5 -

SERIES 4 -- to compare traditional and stone paolas and open fire with metal and mud stoves

A - Papa and Moroho 1 -
plus Metsi 2 -
size 4 paola 3 -
lisu 4 -
(same as test on stoves) 5 -

B - Papa and Moroho 1 -
plus Metsi 2 -
traditional paola 3 -
lisu 4 -
(same as test on stoves) 5 -

C - Papa and Moroho 1 -
plus Metsi 2 -
open fire with leifo 3 -
lisu 4 -
(same as test on stoves) 5 -

70

STONE PAOLA FOLLOWUP CHECKLIST - RET

Check if repair needed

Name of owner _____ Village _____

Name of builder (if different) _____

Date paola built _____ Date of checkup _____

Person making followup visit _____

POINTS TO CHECK:

Cost of paola _____
(if applicable)

SPACE BETWEEN WALLS AND POT

What size pot was the paola made for? _____

Can one finger be inserted all around between the pot and the walls? Yes ___ No ___

Is there too much space (more than 1.5 to 2 cms)? Yes ___ No ___

7 ☐ If spacing is not correct, how can it be modified?

DIAMETER OF THE FIREBOX

Is the diameter of the firebox about 2/3 the diameter of the pot for which the paola is made (just larger than the diameter of the legs)? Yes ___ No ___ Too large ___ Too small ___

7 ☐ If the firebox is the wrong diameter, what can be done to change it?

GRATE

What kind of grate is used? Iron ___ Wire ___ Tin ___ Other _____

Is it put in place well? Yes ___ No ___

7 ☐ If grate is not well done, what can be done to improve it?

HEIGHT FROM GRATE TO BOTTOM OF POT

Is the distance between 25-30 cms? Yes ___ No ___

7 ☐ If the distance is more or less, how can it be modified?

ASH AND FEED HOLES

From what direction(s) do the main winds come? _____

Do the ash and feed holes conform to the wind patterns? Yes ___ No ___

DAMPERS

	Location	Damper	Too Tight	Too Loose
7 ☐ for Ash Hole No. 1				
7 ☐ for Ash Hole No. 2				
7 ☐ for Feed Hole No. 1				
7 ☐ for Feed Hole No. 2				

If dampers don't fit correctly, what can be done to improve fit?

Ash Hole No. 1

Ash Hole No. 2

Feed Hole No. 1

Feed Hole No. 2

71

Repair Made | Repair Needed

HEIGHT OF WALLS

Do the paola walls come to at least the bottom of the pot handles?
Yes ___ No. ___

Are they too high? Yes ___ No ___ Too low? Yes ___ No ___

☐ ☐ Should any changes be made? Yes ___ No ___ If yes, what changes?

LORENA MIX

Is the lorena mix holding to the walls well? Yes ___ No ___

Is the mix cracking? Yes ___ No ___

Has the lorena suffered any damage from rain? Yes ___ No ___

☐ ☐ If damaged, what recommendations can you make to repair it?

SMEARING

Is the paola smeared outside? Yes ___ No ___

Does the smearing on the top of the paola slant outwards? Yes ___ No ___

☐ ☐ Does the paola need to be resmeared? Yes ___ No ___

COVER

☐ ☐ Does the paola have a cover which protects it well from rain?
Yes ___ No ___

What is the cover made of? _____

CRITICAL OF USER OF PAOLA

How often is the paola used? _____

What size pots are used in it most often? _____

What fuel(s) are used in it? _____

If patsi, what specific kind(s)? _____

Does the paola use more ___ or less ___ fuel than her other method(s) of cooking? What other methods does she use? _____

What does she like about the paola?

What does she dislike about the paola?

Does she know of anyone else who has built a paola? Yes ___ No ___

Names of people	Places where they live

Please note other comments the user (or others participating in the conversation) made about the stone paola.

72

Stone Paola Course Agreement

Based on their experiences in giving several courses on stone paola construction in the Malefiloane area, RET staff members drew up the following list of items to be agreed upon with villagers requesting a course:

- courses are not for individuals, and the villagers or organization must agree to have five people take the two-day course;
- the villager(s) who receives the paola must provide the stones, mud, sand and clay in advance;
- the person or organization, such as a school, who gets the paola must pay M3 for the rods and grate; and
- if the materials are not provided by the time the course is to start, the course will be cancelled by the RET project.

A written, signed agreement between the villagers or organization and the RET project is required for each course. A form in Sesotho (shown on the next page) was drawn up by Mokhotlong staff members for use by all four RET centers.

RET PROJECT
MINISTRY OF CO-OPS & RURAL DEV.,
P.O. BOX 43,
MOKHOTLONG 500.

LINTHO TSE LEBELETSOENG PELE HO KA TSOARQA THUPELO EA HO HAHA PAOLA EA MAJOE

Motho ea kopileng hore thupelo e eo tsoareloa lapeng ha hae o lebeletsoe ho phethisa tse latelang.

1. A batle batho ba bang ba bane, ba tla rupeloa le eena.
2. A etse bonnete ba hore batho ba tla rupeloa ba bokella lintho tse latelang.

   (a) Majoe a lekaneng ho qeta leifo (Sefapano kapa selikalikoe)

   (b) Bonyane letsopa le ka tlalang kiribae le lehlabathe le ka tlalang likiribae tse tharo.
   kapa
   Letsopa le ka tlalang liemere tse tharo le lehlabathe le ka tlalang liemere tse robileng mono o le mong.(Letsopa-3, Lehlabathe-9)

   (c) Ho be le metsi a ho luba seretse.

3. A itokisetse ho patalla litsepe tse tla sebelisoa (Ha joale ke maloti a mararo, M3.00)

Haeba tse ka holimo li sa phethisoa, thupelo e tla hlakoloa. Mosebeletsi oa RET o tla ba teng letsatsi pele ho thupelo, ho ikholisa hore tsohle li phethiloe. Re tsepa hore batho ba rupetsoeng ba tla ruta batho ba bang ba batlang motseng oa bona. Thupelo e'ngoe e ka fanoa ho batho ba rupetsoeng ke RET haeba ho hlokahala.

REA LEBOHA

MOKOPI:- .....; DATE.....

RET:- .....;DATE.....

74

Joala brewing timeline observations - RET

location _____ Cook _____ Observer _____

type of pot _____ Amount of Joala _____

remarks:

DAY ONE

Fuel used dry/wet	amount to start	added	amount left	total
Sehalahala				
Khapane				
Bokoluba				
Lisu				
Wood				

DAY TWO

Fuel used dry/wet	amount to start	added	amount left	total
Sehalahala				
Khapane				
Bokoluba				
Lisu				
Wood				

Cooking device used - sketch and describe (include use of leifo)

fuel loading pattern - describe

Was brewing outdoors or indoors? (circle one)

Was wind light, medium or strong? (circle one)

Was this a test, home brewing or commercial brewing? (circle one)

Joala timeline observations

Time	Description of fire and cooking procedure

APPENDIX D

Supplement on Retained Heat Cookers

	Page
Hay-Box Cooker Record	D-1
Report on Testing of Retained Heat Cookers at Malefiloane	D-2
Comparative Test Results	D-4

HAY-BOX COOKER RECORD - RET PROJECT

DESCRIPTION OF COOKER _____

DATE	POT SIZE	TYPE OF FOOD	QUANTITY	MIN. TO BOIL	MIN. BOILED	TIME IN	TIME OUT	TOTAL TIME	TEMP. OUT	AMBIENT TEMP.

REPORT ON TESTING OF RETAINED HEAT COOKERS AT MALEFILOANE-RET

We have been testing five different retained heat cookers (hay-boxes) for their usefulness at high altitudes. To compare their performance, we did the following test: we brought three liters of water to a boil in a 23-centimeter aluminum saucepan, boiled it for one minute to get a good rolling boil and then placed the covered saucepan immediately into one of the hay-boxes. The pan was left exactly one hour in the hay-box, opened up and the water temperature taken before the pan was removed from the hay-box.

The hay-boxes tested are as follows:

1. cardboard box with two styrofoam bead-stuffed pillows
2. wonder-box (commercial model) with two styrofoam bead-stuffed pillows
3. cardboard box with two straw-filled pillows
4. cardboard box with two long straw-filled pillows
5. lorena walls (sand and clay mixture) with loose straw on the bottom and a straw-filled pillow on top

All the cardboard boxes, including the one used with the wonder-box pillows, measured 48 centimeters by 40 centimeters by 34 centimeters. The lorena walls were longer, narrower and lower overall. All the pillows were the same size, except for the wonder-box ones which were slightly smaller.

At least three tests on each hay-box were done. In comparing the five hay-boxes, we find that hay-boxes one and two (with styrofoam beads) store the heat better, followed by number three with straw-filled pillows. The cardboard box with long

straw-filled pillows (number four) did less well, as did number five, the lorena-walled hay-box (possibly because of its different dimensions).

The straw-filled pillows did well enough for us to recommend them in our dissemination efforts in the rural areas. One problem we had with all types of hay-boxes was damage by mice. This is the hungry time of year and the mice moved in. As yet, we do not have specific recommendations for how to solve the problem of mice.

by Agnes Adontsi,
with additions by Margaret Thomas

December 21, 1982

HAY-BOX COOKER RECORD - RET PROJECT

COMPARATIVE TEST RESULTS

DATE	POT SIZE	TYPE OF FOOD	QUANTITY	MIN. TO BOIL	MIN. BOILED	TIME IN	TIME OUT	TOTAL TIME	TEMP. OUT	AMBIENT TEMP.
CARDBOARD BOX - 2 STYROFOAM BEAD-STUFFED PILLOWS										
22/11	s* 23 cm	water	3 liters	22 min	1 min	10:22	11:22	1 hour	83°C	x
30/11	s 23 cm	water	3 liters	27 min	1 min	9:57	10:57	1 hour	83°C	x
2/12	s 23 cm	water	3 liters	?	1 min	9:37	10:37	1 hour	82°C	23°C
WONDER-BOX - STYROFOAM BEAD-STUFFED PILLOWS										
18/12	s 23 cm	water	3 liters	22 min	1 min	9:58	10:58	1 hour	83°C	x
18/12	s 23 cm	water	3 liters	23 min	1 min	2:55	3:55	1 hour	82°C	x
21/12	s 23 cm	water	3 liters	21 min	1 min	11:13	12:13	1 hour	82°C	x
CARDBOARD BOX - 2 STRAW-FILLED PILLOWS										
1/12	s 23 cm	water	3 liters	18 min	1 min	9:18	10:18	1 hour	80°C	x
1/12	s 23 cm	water	3 liters	?	1 min	2:13	3:13	1 hour	81°C	x
1/12	s 23 cm	water	3 liters	21 min	1 min	3:25	4:25	1 hour	80°C	x
CARDBOARD BOX - 2 LONG STRAW-FILLED PILLOWS										
2/12	s 23 cm	water	3 liters	?	1 min	9:39	10:39	1 hour	79°C	23°C
2/12	s 23 cm	water	3 liters	22 min	1 min	11:15	12:15	1 hour	79°C	x
3/12	s 23 dm	water	3 liters	20 min	1 min	9:20	10:20	1 hour	78°C	x
LORENA WALLS - LOOSE STRAW IN BOTTOM, STRAW-FILLED PILLOW ON TOP										
22/11	s 23 cm	water	3 liters	26 min	1 min	10:28	11:28	1 hour	78°C	xx
30/11	s 23 cm	water	3 liters	27 min	1 min	9:57	10:57	1 hour	77°C	x
2/12	s 23 cm	water	3 liters	18 min	1 min	11:20	12:20	1 hour	75°C**	x
3/12	s 23 cm	water	3 liters	20 min	1 min	2:30	3:30	1 hour	77°C	x

*s - saucepan

**pillow not well tucked in

APPENDIX E

Plans for the RET Model 3 Metal Stove, Production Jigs, Templates and Chimney System

LESOTHO RENEWABLE ENERGY TECHNOLOGY PROJECT

PLAN SET FOR THE RET MODEL 3 METAL STOVE

WITH PRODUCTION JIGS, TEMPLATES AND CHIMNEY SYSTEM

Designed by:

Glenn Burket
Associates in Rural Development, Inc.
362 Main Street
Burlington, VT 05401
U. S. A.
Under AID Contract No. AFR-0206-C-00-1016-00.

Date: January, 1983

RET-3 STOVE

INTRODUCTION

The RET-3 stove is a metal stove designed to burn the dung fuels commonly used for cooking and heating in Lesotho, and significantly reduce fuel use compared to traditional cooking and heating practices. The stove accommodates both traditional three-legged and modern, flat-bottomed cooking pots. The chimney, which removes smoke and hot gases from the cooking/living area, helps eliminate health problems associated with open fires.

The RET-3 stove design and chimney system were developed for use in Lesotho based on that country's specific cooking needs, fuel and materials availability and other conditions. As it is highly unlikely that other areas will have identical conditions, these systems may be unsuitable for use elsewhere without modifications. Therefore, although the RET-3 stove and chimney systems have performed efficiently and safely in the area for which they were designed, ARD and the designer take no responsibility for their level of performance and/or safety when manufacture and/or use occur outside the RET project's supervision.

The following plans are organized into three sections, as listed below:

Section	Page
RET-3 Stove	1
Production Jigs and Templates for the RET-3 Stove	10
RET Chimney System	18

Included in this section are:

- a list of tools needed for producing the RET-3 stove;
- notes on small-scale production;
- cutting, forming and assembly instructions;
- notes on using the stove;
- a schedule of parts and materials required; and
- a complete set of plans for building the RET-3 stove.

TOOLS

1. Table-mounted hand shear capa 10mm Ø round, and 5x25mm flat
2. Oxygen-acetylene cutting torc
3. 23mm Ø abrasive cutoff saw.
4. Bending brake with capacity t 3mm thick.
5. 17.8cm Ø angle grinder.
6. 15.2cm Ø bench grinder.
7. 30.5cm Ø drill press.
8. 180-amp arc welder with relat
9. 13mm Ø capacity power hand dr
10. 10cm Ø grinding wheel mounte
11. Center punch.
12. Tin snips for cutting 0.5 - (
13. 1 - 12mm Ø drill bits in .5mm
14. 900gm ball-peen hammer.
15. Two or more 200mm C-clamps.
16. Sheet metal scribe.
17. 3-meter tape measure.
18. 2-meter straight edge.
19. Chalk.
20. Pop riveting tool.
21. 2-meter or longer workbench,
22. Miscellaneous files, pliers,

LANS

EDED

of cutting at least 3mm sheet, steel sizes.

ınd material 60cm long by

ıquipment.

ɔr use in drill.

nm steel.

nurements.

ıun^ed with 10cm vise.

enches, etc. as needed.

PRODUCTION NOTES

In small-scale production, stoves should be made in multiples of six. Sheet metal parts for six stoves can be cut from stock sized sheets with very little waste (see Figures 4A and 4B).

The cutting, forming and assembly instructions are listed in steps suitable for most applications. The steps and their order may vary, depending on the tools used and the workshop layout. In general, the steps are set up to make the best use of time and effort if the procedures outlined in each step are followed for all stoves or stove parts in a single production run.

Cutting, unless otherwise noted, is done with the table-mounted hand shear. Sheet metal parts can be cut with the oxygen-acetylene torch, but this is not recommended for large-scale production. Some larger sized hand shears can cut angle iron, such as that used for the legs of the RET-3 stove (see Figure 8I). Shears with this capability would eliminate the need for an abrasive cutoff saw.

Drilling, unless otherwise noted, is done with a drill press, preferably with a vise mounted to the workbench for convenience and safety.

To simplify the plans, welding details are left up to the skill of the welder. Most welds, by design, are hidden on the stove, so perfect, smooth welds are not essential. Take care that welds do not interfere with the operation of the stove, particularly around the door and potholes. Welds around the firebox bottom, firebox back, firebox to stove body joint, stove body ends, and stove body to top joint (i.e., areas prone to separation) should be continuous. The stove has been successfully welded using 3.15mm Ø 6013 "Vitamax" welding rod with a fast moving tip dragging technique at about 100 amps with an AC machine.

CUTTING, FORMING AND ASSEMBLY INSTRUCTIONS

1. Mark and cut pieces from 3mm and 1.6mm sheet steel as per cutting layouts (Figures 4A and 4B respectively). Material for the BAFFLES (Figures 5D and 6C), FIREBOX BOTTOM (Figure 5G) and STOVE BODY ENDS (Figure 6B), remain in strips to be cut and fitted during the assembly process.

2. Using Figure 5E, mark the FIREBOX FRONT AND SIDES for bending. The dimensions may vary somewhat, depending on the bending brake used and how it is set up.

3. Using Figure 6A, mark the STOVE BODIES for bending. Again, this may vary depending on the brake used.

4. Bend the FIREBOX FRONT AND SIDES and the STOVE BODY on the bending brake. Set the hinged top part of the brake back about 1cm from the bending axis. This will yield approximately a 1cm radius to the bend.

5. Using the schedule of parts from stock sizes (Figure 4C), cut the parts from stock sizes. The quantities listed in this schedule are for one stove. Multiply the number of parts listed by the number of stoves being produced to get the actual number of parts needed.

6. Finish the parts as noted on the schedule. Use the STOVE BODY LEG HOLE MARKING TEMPLATE (Figure 17D) to mark the 8.5mm holes on the STOVE BODY LEGS (Figure 8I). (Remember, the hole position is reversed on the front and back leg of each stove.) Using the SPRING JIG (Figure 17C), drill 8.5mm holes in the DOOR HANDLE (Figure 8M) and HINGE CLIPS (Figure 8P). This jig holds the work in place in the drill press vise. There is no need to mark or center punch the holes. Store the finished parts separately in marked boxes for later use.

7. Cut and fit STOVE BODY ENDS (Figure 6B) and BAFFLES (Figures 5D and 6C) to the STOVE BODY (Figure 6A). One of the 1st pothole baffles will need an approximately 2cm strip to complete it. Do not weld the parts in place at this time.

8. Cut pot clearances in the baffles with a torch using the POTHOLE BAFFLE TEMPLATE (Figure 17A). Center the template and place the ends flush with the edge of the baffle. Clamp in place and cut on the inside with the torch.

9. Tack weld the stove body ends in place, flush with the edges of the stove body. Mark one end "right end" on the outside for future reference.

10. Using the STOVE BAFFLE JIG (F
weld the baffles in place. T
left end piece and the two ba
the stove body. Remember, th
baffle) goes next to the left

11. Finish welding the baffles on
ing sides of the baffles ever
stove body from warping.

12. Center STOVE TOP CENTER SUPPO
of the bottom of the STOVE TO
of it to the stove top with 2
sides of the support every 10
stove top from warping.

13. Center stove body (with ends
top. Tack weld them together

14. Check for warpage and fit cla
weld stove body and stove top

15. Using the STOVE EXIT RING JIG
EXIT RING (Figure 8G) to righ
positions the ring 5cm from b

16. Finish welding ends to stove

17. Tack weld the FIREBOX FRONT A
FIREBOX BACK (Figure 5F). Fi

18. Leaving 1cm setback from the
stove body, tack weld the con
body. Finish welding firebo

19. Mark pothole cover center hol
COVER CENTER HOLE MARKING TE
of the template should hook c
the stove top.

20. Drill pothole cover center h

21. Attach OUTER POTHOLE TEMPLAT
bolt or pin, and cut out out
that the wide tab on the tem
first pothole to the second.
changing the pothole rings.

22. Attach INNER POTHOLE TEMPLAT
cut out in Step 21. Using t
(Figure 5C). The ring left
(Figure 5B).

igure 12A) as a guide, tack
ie jig's slots fit over the
ffles, positioning them in
3mm baffle (the 1st pothole
end.

ly, with 2cm welds on alternat-
10cm. This prevents the

RT (Figure 8B) across the middle
P (Figure 5A). Weld the edge
cm-long welds on alternating
cm. The support prevents the

and baffles in place) on stove
.

np or grind as needed. Then
together.

(Figure 17B), weld STOVE
t end of stove. The jig
ack of stove.

body.

ND SIDES (Figure 5E) to the
nish welding together.

front and left sides of the
pleted firebox to the stove
and stove body together.

es on stove top with POTHOLE
PLATE (Figure 12B). The clips
n the back and left side of

les, using 9mm Ø drill bit.

(Figure 16A) with 8mm Ø
r pothole with torch. Notice
late is rotated 60° from the
This is to prevent inter-

(Figure 16B) to the piece
rch, cut the POTHOLE COVER
ver is the POTHOLE RING

23. Attach DOOR TEMPLATE (Figure 13A) with clamps and cut out DOOR (Figure 5H) and ash catcher opening.

24. Using torch, cut openings between firebox and stove body and stove body exit ring. Use firebox, 1st pothole baffle and stove exit ring to guide the torch over the firebox.

25. Using GRATE SUPPORT JIG (Figure 13D) to hold GRATE SUPPORTS (Figure 8R) against the front and back of the firebox, weld grate supports in place.

26. Cut and fit FIREBOX BOTTOMS (Figure 5G) to fit inside firebox.

27. Recess bottom into firebox 2-3mm. Tack and finish weld in place.

28. Tack FIREBOX LEGS (Figure 8S) in place. Straighten legs if necessary. Finish weld.

29. On a level, flat surface, clamp STOVE BODY LEGS (Figure 8I) in place. Use the hole in the legs to guide an 8.5mm drill bit into the stove body. Use the drill press for this, if possible. Otherwise, use a hand power drill. Bolt legs in place with 8x25mm bolts with nuts.

30. Using WATER TIN HOLDER CLIP JIG (Figure 13B), weld LOWER WATER TIN CLIPS (Figure 8Q) in place. The jig hangs off the stove top, centered on the firebox. The clips are placed on the lower support just inside the vertical supports for welding. Place the UPPER WATER TIN CLIP (Figure 8T) flush with the edge of the stove top and against the end of the top horizontal piece of the jig.

31. Using DOOR FRAME JIG (Figure 14) to hold DOOR FRAME TOP AND BOTTOM (Figure 8K) and DOOR FRAME SIDES (Figure 8L) weld the door frame together. Weld only on one side of door frame.

32. Using DOOR JIG (Figure 15), align DOOR (Figure 5H) and door frame (welded side up). Tack weld door and door frame together. Reverse jig and center punch through holes on back of jig. Remove from jig.

33. Finish welding doors.

34. Drill center punched holes in the door with an 8.5mm drill bit. The doors can be stacked, clamped and drilled in groups of six or more.

INSTRUCTIONS, continued:

35. Assemble door HANDLE (Figure 8M) with an 8x25mm bolt and two nuts, one on either side of the handle--leaving the outside one loose enough to permit the handle to move. Insert DOOR HANDLE STOP (Figure 8N) flush with the back of the door.

36. Weld outside nut of handle to end of bolt and weld door handle stop in place on back of door.

37. Set assembled door in place over firebox opening. Slide hinge clips (Figure 8P) on HINGE PIN (Figure 8O) and set on left edge of door. Tack weld hinge clips to firebox and hinge pin to door. Check door for free opening and closing. Adjust clips and pin if necessary. Finish welding clips and pin. Tack weld LATCH (Figure 8J) in place over horizontally positioned handle. Adjust for free operation. Weld in place.

38. Grind smooth all edges of POTHOLE COVER (Figure 5C), POTHOLE RING (Figure 5B) and the openings in the stove top. Use a mounted grinding wheel, files and a bench grinder. Straighten warpage if necessary.

39. On the bottom of the stove top, weld SHORT and LONG POTHOLE RING CLIPS (Figures 8C and 8D, respectively). For each pothole, the two short clips fit under the two narrow slots, and the long clip fits under the wide slot. (See Figure 5A) All clips are centered under the slots, overlapping each side of the slot by about 1cm. The clips are set back 2-3mm from the rim of the pothole to allow room for welding the clips in place. Clamp clips in place before welding.

40. Using SAUCEPAN BAFFLE JIG (Figure 13C), align SHORT and LONG POTHOLE RING BRACES (Figures 8F and 8E, respectively) to bottom of POTHOLE RING (Figure 5B). The braces are positioned differently on the ring covering the 1st pothole (see Figure 9B) from the ring covering the 2nd pothole (see Figure 9C). When aligned, tack weld the braces to the ring and remove jig.

41. Finish weld the braces to the ring.

42. Cut the strips for SAUCEPAN BAFFLES FOR 1st and 2nd POTHOLE COVERS (Figure 4B) into 20cm lengths.

43. Bend saucepan baffles as indicated in Figures 6D and 6E.

44. Place proper saucepan baffle in each pothole with the 8cm side vertical to the left side of the POTHOLE BAFFLES (Figures 5D and 6C). The other side of the saucepan baffle should bend to the right. Place the pothole rings with braces in their respective potholes. Lift the saucepan baffle up against the braces (see Figures 9B and 9C). Position the saucepan baffle so that the 8cm side blocks the pothole baffle. When each baffle is correctly positioned, weld it to the pothole ring braces.

45. Cut the 0.5-0.6mm galvanized steel, as indicated, for the BODY, HANDLE and FACE (Figures 7A, 7B and 7C, respectively) of the ASH CATCHER (Figure 7D).

46. Fold and bend the body and handle, as indicated in the figures.

47. Assemble the ash catcher as in Figure 7D. The face should be flush with the bottom of the body of the ash catcher and centered with the sides. The handle should be centered on the face. Clamp all three pieces together, drill holes, as indicated, through all three pieces, using a drill the proper size for your pop rivets. Assemble the ash catcher with pop rivets (see Figure 4D).

48. Assemble the GRATE (Figure 9D), using the GRATE JIG (Figure 11). Seven GRATE BARS (Figure 9D) align with notches on the jig, an eighth bar is centered across the other seven, and the assembly welded together. Up to four grates may be assembled on the jig at one time.

49. Grind till smooth all exposed rough or sharp edges on the stove. Use a stiff wire brush and/or chipping hammer to remove slag from exposed welds. Finish the stove with stove polish or high-temperature paint.

50. Insert ash catcher and place grate into stove through the first pothole opening. Bars on the grate should run front to back, with the cross piece on the bottom.

USER NOTES

The RET-3 stove should be installed on a level surface at least 90cm away from any combustible material. Be sure to consider chimney placement when choosing a spot. (See notes for RET Chimney System, page 18.) Place the stove away from where children play or people walk past frequently.

As noted, the stove accommodates both types of cooking pots. When using flat-bottomed saucepans, remove POTHOLE COVER (Figure 5C); when using three-legged pots, remove POTHOLE RING (Figures 9B and/or 9C). If only one pothole is in use, place the ring and cover over the other. The ASH CATCHER (Figure 7D) controls air flow into the stove. Open the ash catcher for more air and a bigger fire; close it for less air and a smaller fire. Feed the fire through the firebox door or the 1st pothole.

Dung, wood or coal may be used in the RET-3 stove. However, use of coal may shorten the stove's life. (See RET Chimney System notes.)

Use stove polish or a high-temperature paint on the outside of the stove to protect it from corrosion. Repair or replace broken or worn-out parts to keep the stove in optimal working condition.

A 3mm SHEET STEEL CUTTING LAYOUT FOR SIX STOVES

(in centimeters)

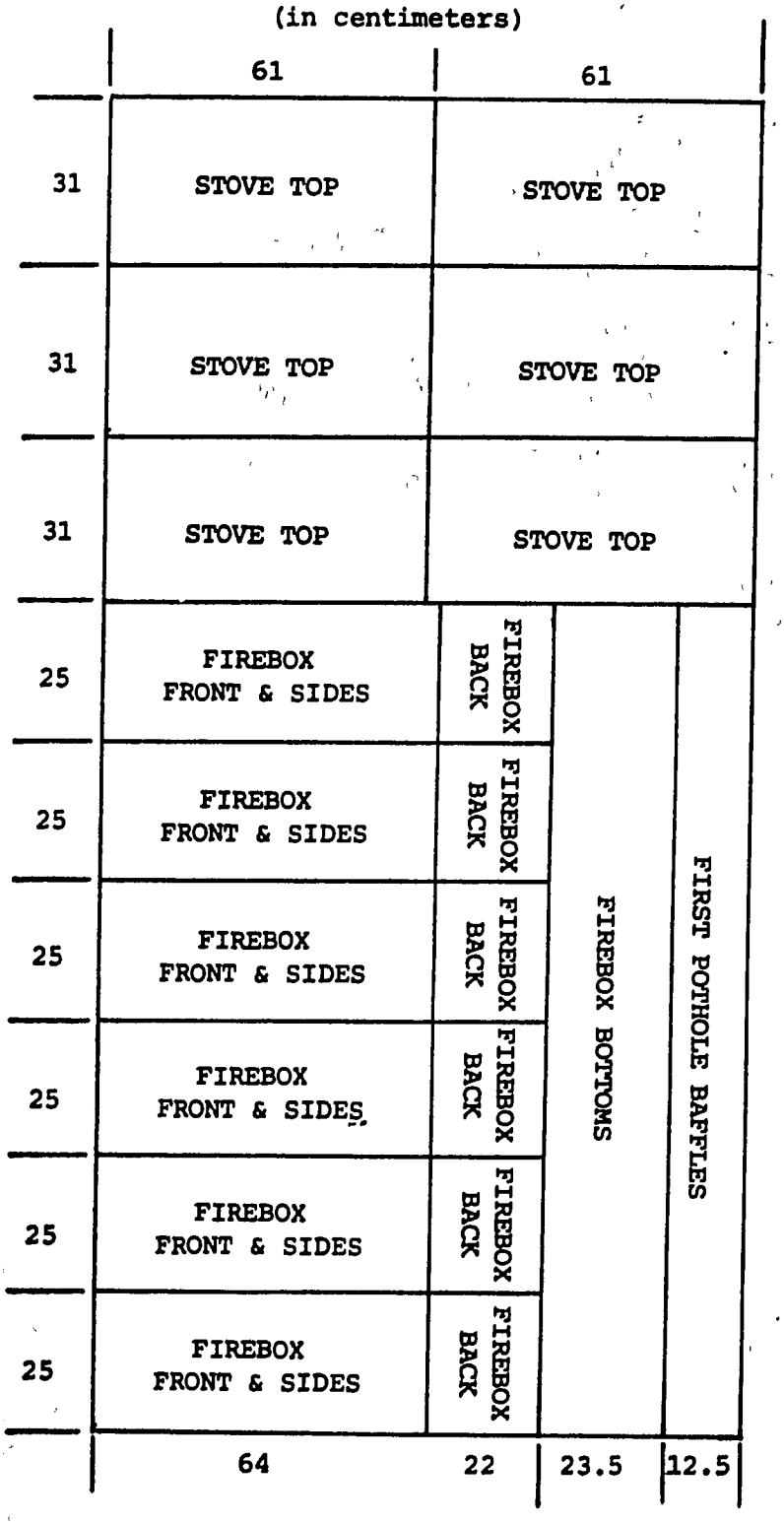

B 1.6mm SHEET STEEL CUTTING LAYOUT FOR SIX STOVES

(in centimeters)

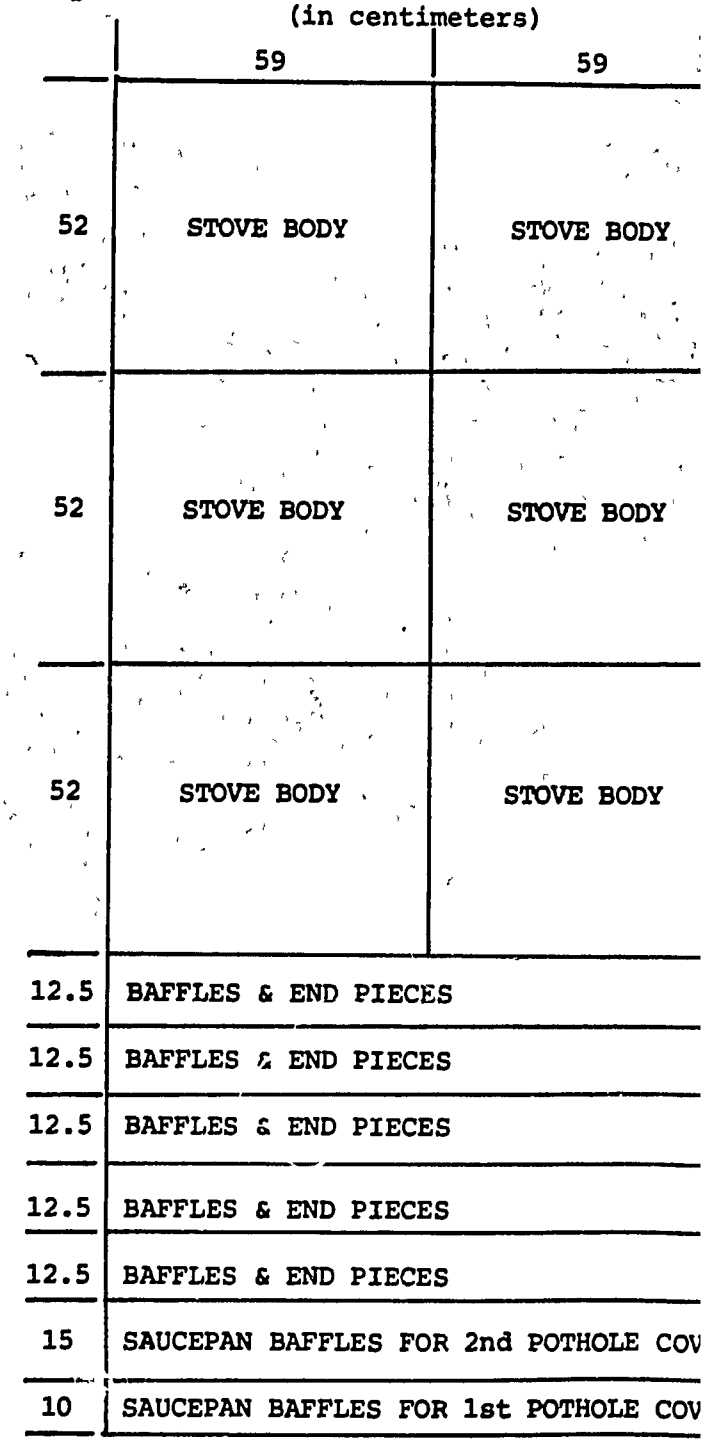

D FASTENERS NEEDED FOR ONE STOVE

FIGURE	NAME AND USE	SIZE	NUMBER NEEDED
8H	BOLTS AND NUTS FOR STOVE BODY, LEGS AND FIREBOX DOOR HANDLE	8x25mm	5 bolts 6 nuts
7D	POP (BLIND) RIVETS FOR ASH CATCHER	3-4mmØ	2

E EACH STOVE ALSO NEEDS ABOUT 1
OF 0.5-0.6mm THICK GALVANIZED ST
THE ASH CATCHER (FIG. 7D) AND WE
ROD FOR ASSEMBLING THE STOVE PAR

C SCHEDULE OF PARTS FROM STOCK SIZES NEEDED FOR ONE STOVE

FIGURE	NAME OF PART	STOCK SIZE	NUMBER NEEDED	LENGTH	NOTES
8I	STOVE BODY LEGS	25 x 25 x 5 angle iron	2	44cm	Drill 2 8.5mm holes in each leg, one 1cm from end, one 8cm from end, chamfer ends
8S	FIRE BOX LEGS		4	8cm	Chamfer ends
8L	DOOR FRAME SIDES	25 x 5 flat bar	2	9cm	Chamfer ends
8K	DOOR FRAME TOP & BOTTOM		2	18cm	Chamfer ends
8G	STOVE EXIT RING		1	35cm	Form into circle & weld ends together
8P	HINGE CLIPS	20 x 5 flat bar	2	2.5cm	Drill 8.5mm hole centered 10mm from end, chamfer ends
8C	SHORT POTHOLE CLIPS		4	5.5cm	
8J	LATCH		1	3.5cm	Bend 120°, 1cm from end, chamfer ends
8Q	LOWER WATER TIN CLIP		2	3.5cm	Chamfer ends
8T	UPPER WATER TIN CLIP		1	6cm	Chamfer ends
8D	LONG POTHOLE CLIPS		2	7cm	
8F	SHORT POTHOLE RING BRACE		4	14cm	
8M	HANDLE, DOOR		1	18cm	Drill 8.5mm hole 10mm from end, chamfer ends
8R	GRATE SUPPORTS		2	18cm	
8E	LONG POTHOLE RING BRACE		2	22cm	Drill 9mm hole in the center
8B	STOVE TOP CENTER SUPPORT		1	2.5cm	Should be welded on before top plate is welded to stove body
8N	DOOR HANDLE STOP	8mm Ø round bar	1	2.5cm	Chamfer ends
8O	HINGE PIN		1	15cm	Chamfer ends
9D	GRATE BARS		8	20cm	

4

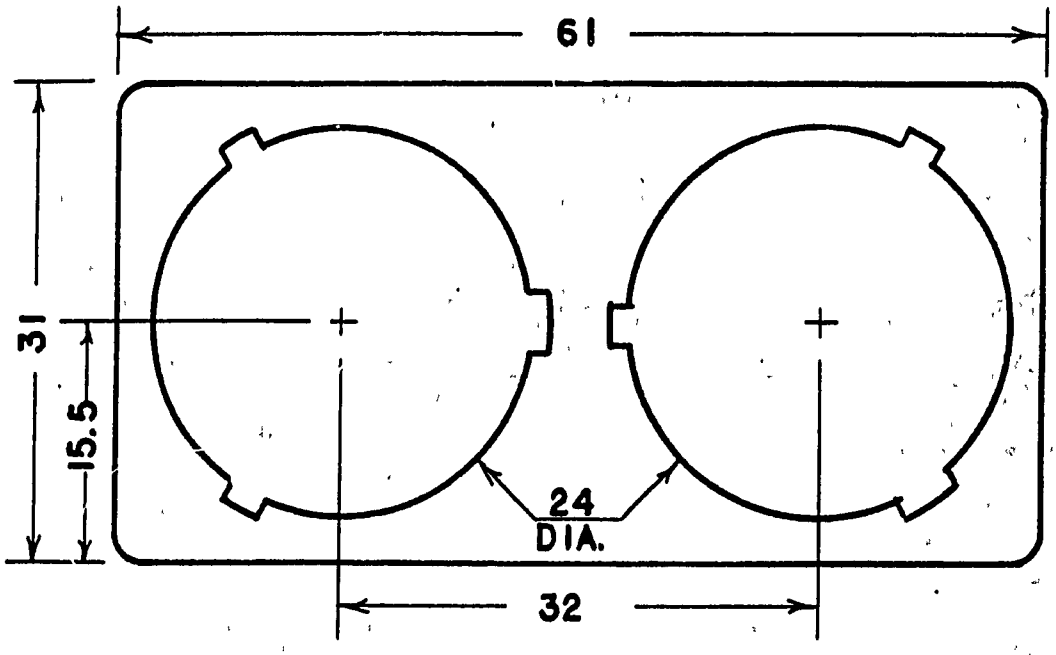

STOVE TOP

CUT POTHOLES AFTER ASSEMBLING TO STOVE BODY

A

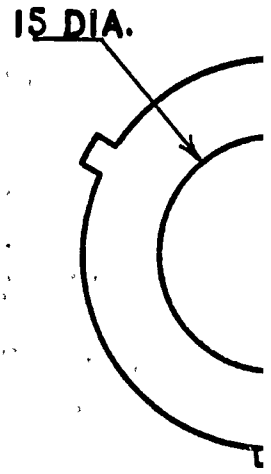

POTHOL

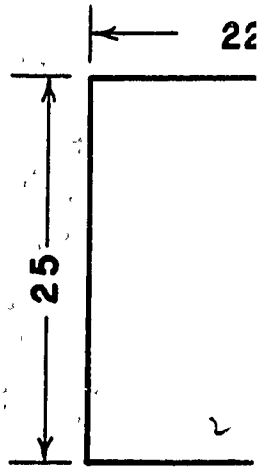

FIRE
BA

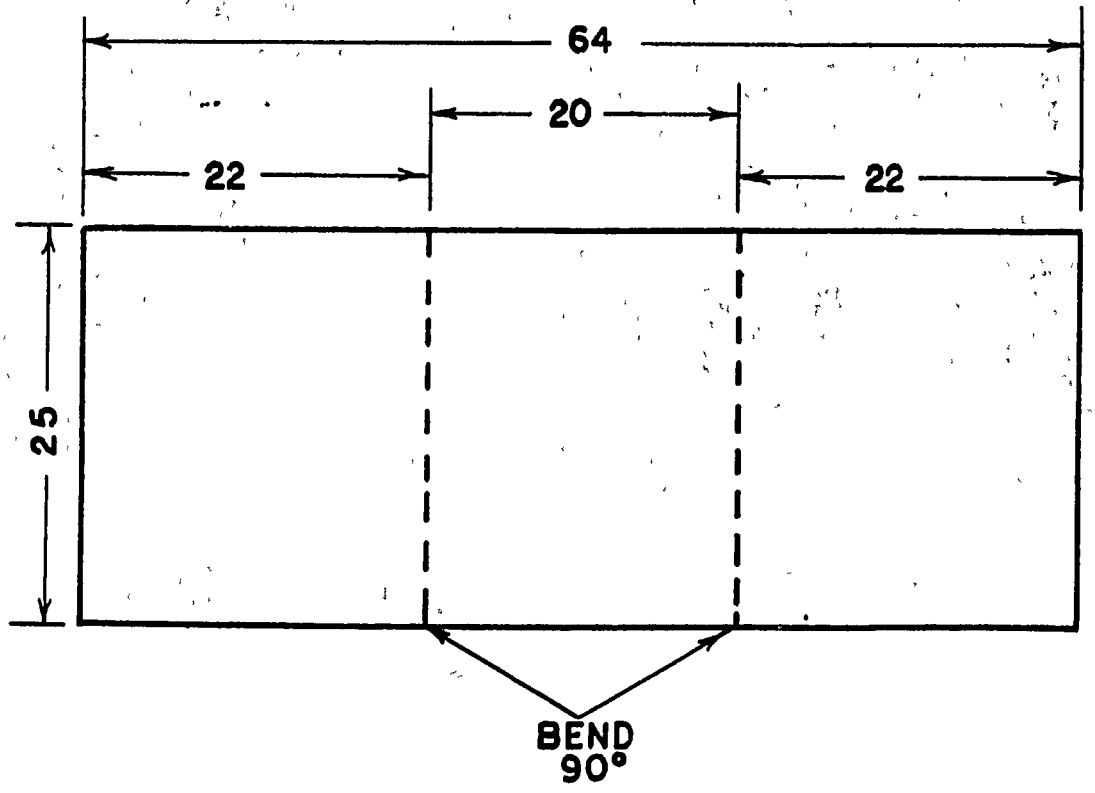

FIREBOX FRONT AND SIDES

E

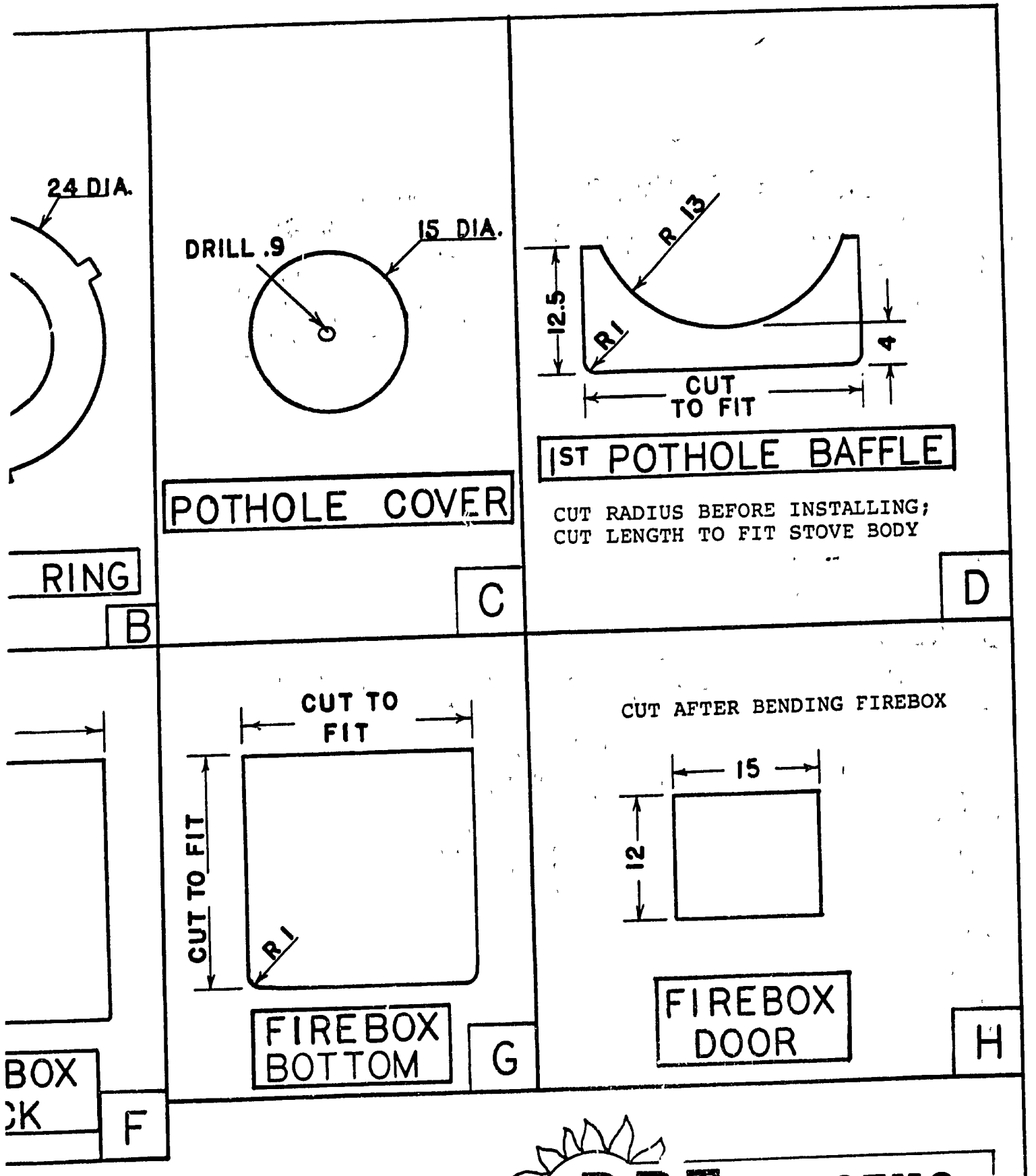

RET LESOTHO
RENEWABLE ENERGY TECHNOLOGY
RURAL DEVELOPMENT

RET-3 STOVE: SHEET STEEL PARTS		
DRAWN BY: H. MITCHELL	DATE: 4/10/83	
SCALE: 1 : 5	UNITS: Cm	PAGE: 5
MATERIAL: 3mm STEEL		
CHECKED BY:	DATE:	

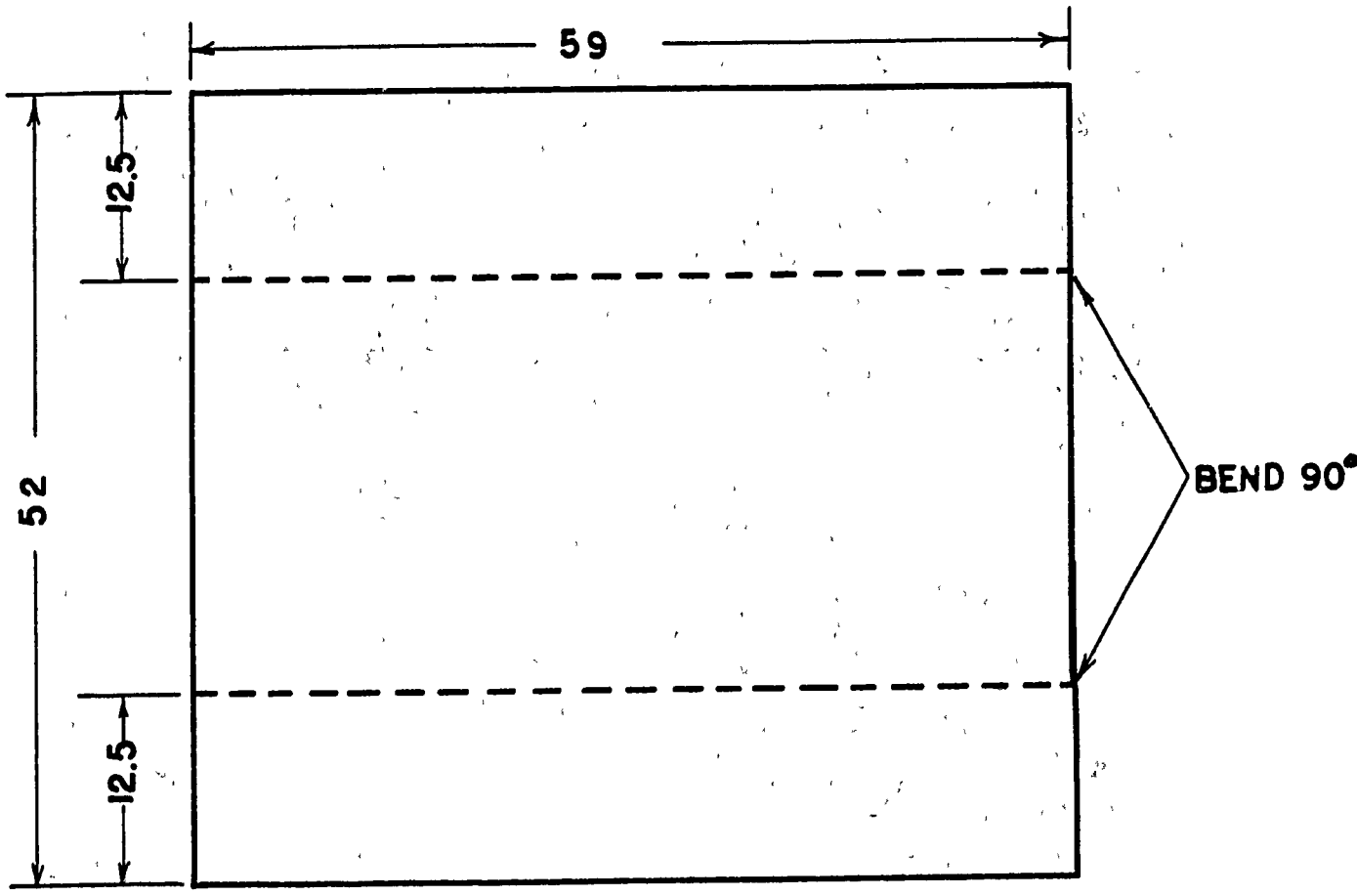

STOVE BODY

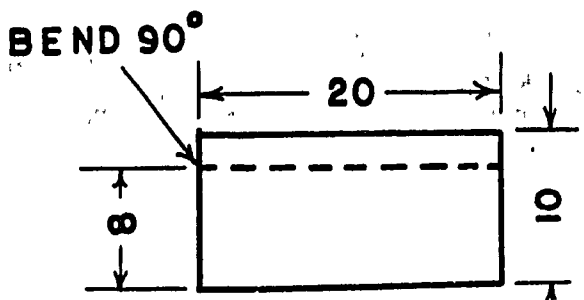

1ST SAUCE PAN BAFFLE

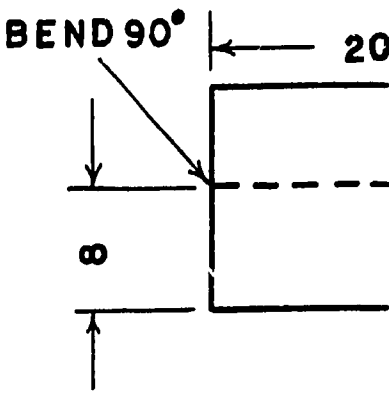

2ND SAUCE P

D

STOVE BODY ENDS

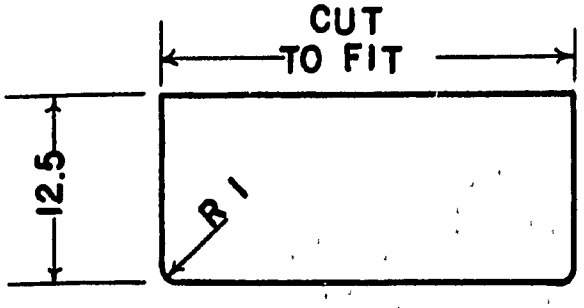

B

2ND POT HOLE BAFFLE

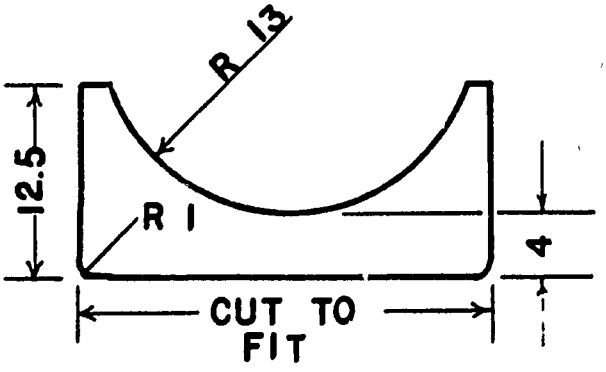

CUT RADIUS BEFORE INSTALLING

C

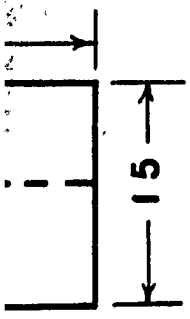

N BAFFLE

E

RET LESOTHO
RENEWABLE ENERGY TECHNOLOGY
RURAL DEVELOPMENT

RET-3 STOVE: SHEET STEEL PARTS		
DRAWN BY: H. MITCHELL	DATE: 4/6/83	
SCALE: 1:5	UNITS: Cm	PAGE: 6
MATERIAL: 1.6mm STEEL		
CHECKED BY:	DATE:	

CUT

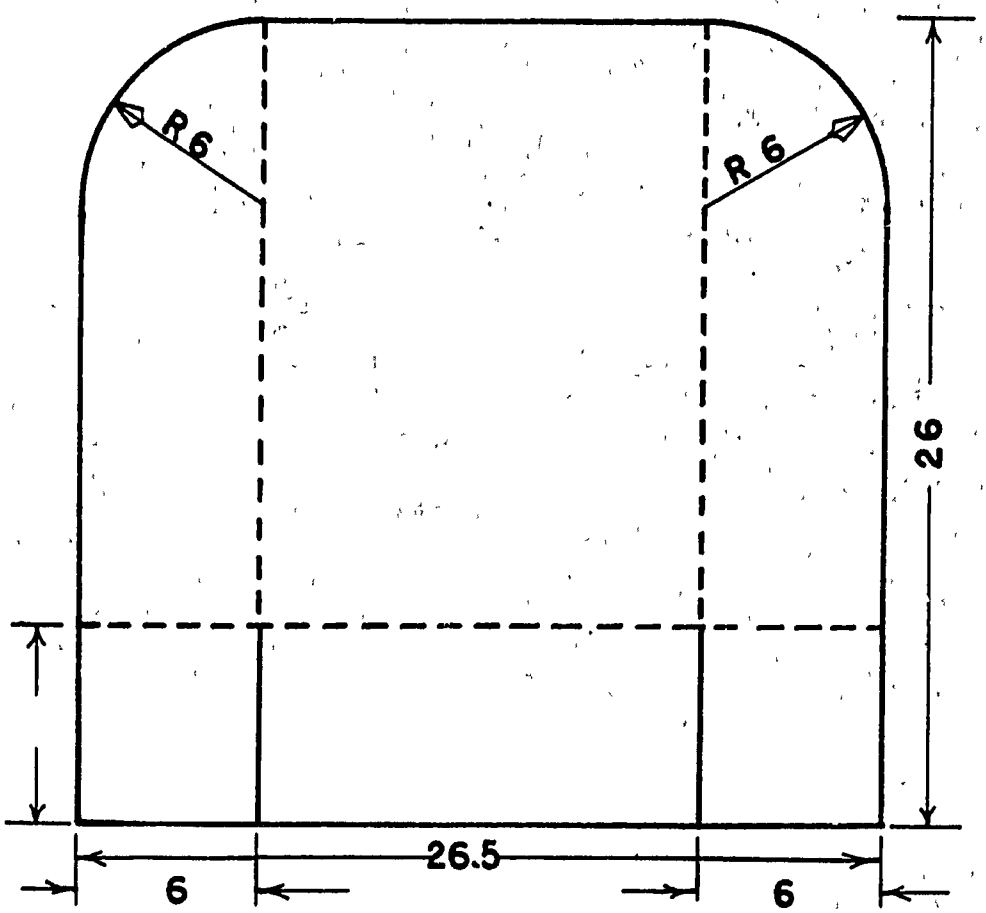

BEND

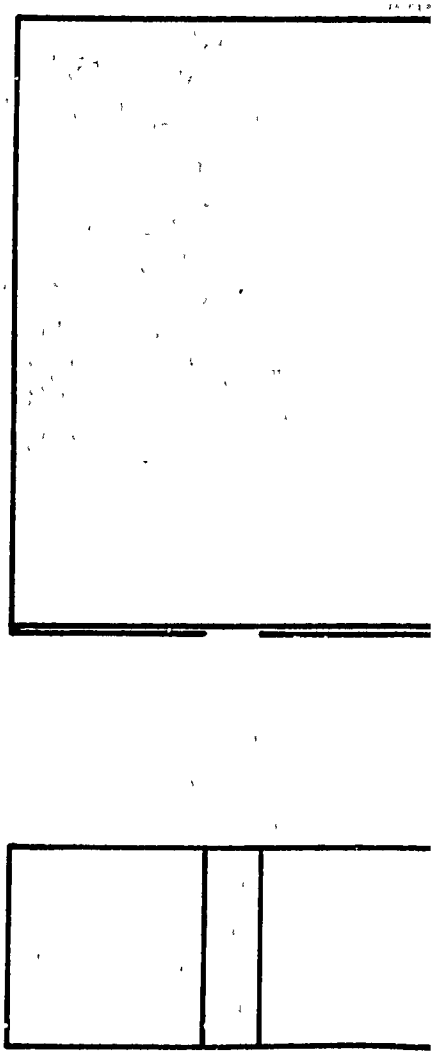

BODY

MATERIAL: 0.5mm GALVANIZED STEEL

CUT

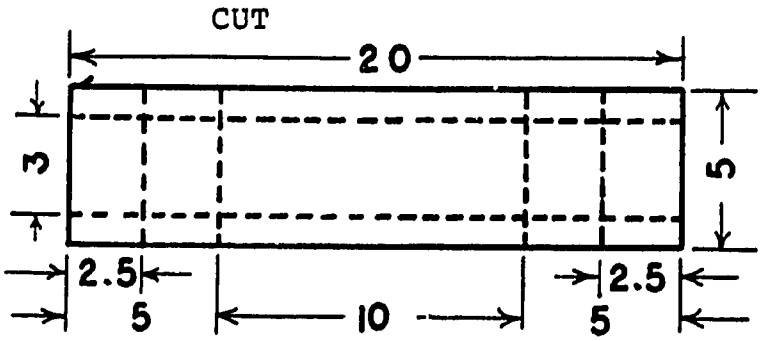

FRC

FOLD AND BEN

TOP V

HANDLE

MATERIAL: 0.5mm GALVANIZED STEEL

TOP VIEW

FRONT VIEW

A

ONT VIEW

ID

VIEW

B

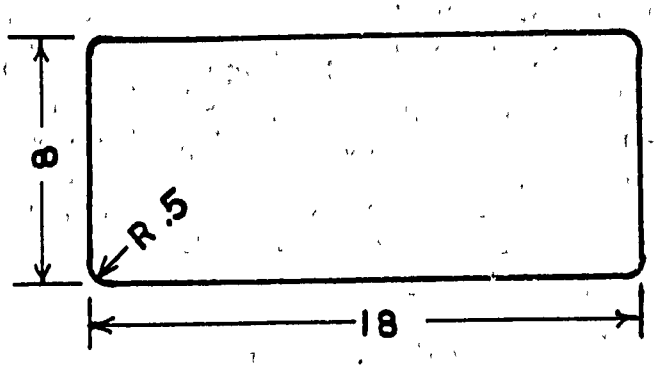

MATERIAL: 0.5mm GALVANIZED STEEL

FACE

C

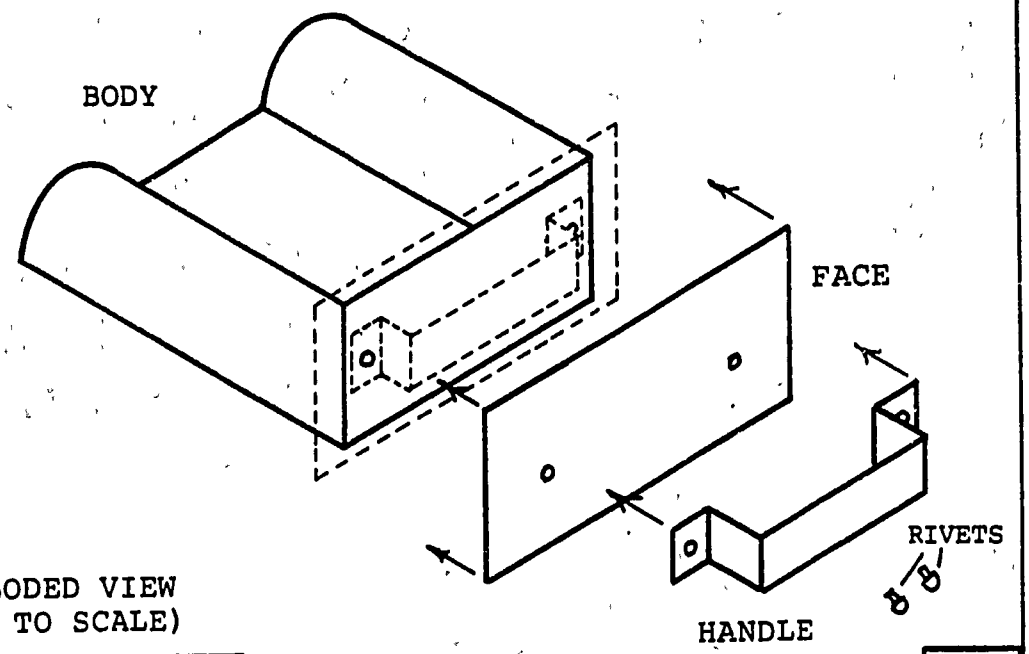

EXPLODED VIEW
(NOT TO SCALE)

ASSEMBLY

D

RET LESOTHO
RENEWABLE ENERGY TECHNOLOGY
RURAL DEVELOPMENT

RET-3 STOVE. ASH CATCHER		
DRAWN BY: H. MITCHELL	DATE: 5/14/83	
SCALE: 1 : 2.5	UNITS: Cm	PAGE: 7
MATERIAL: NOTED		
CHECKED BY:	DATE:	

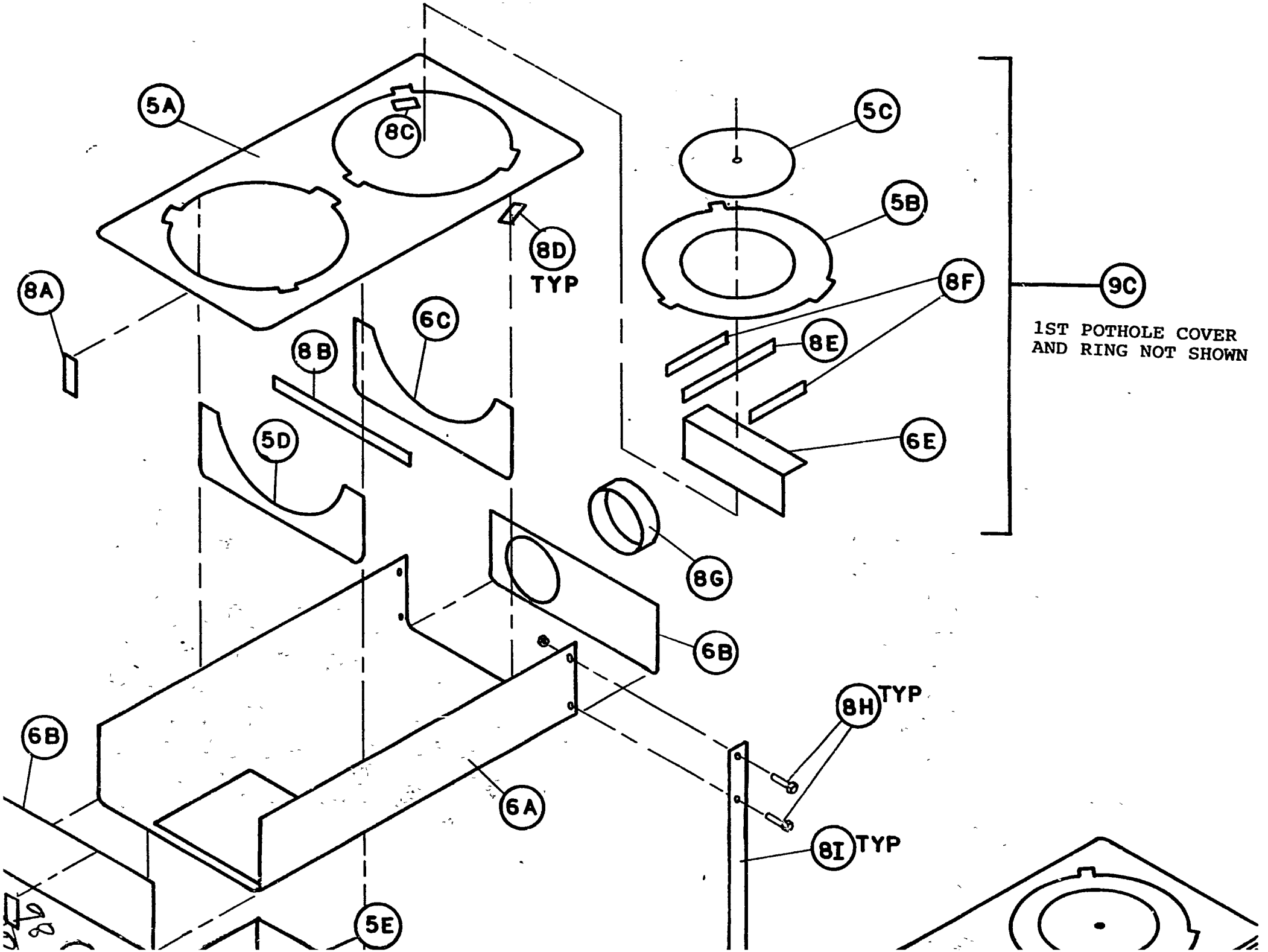
5A
8C
8D
TYP
8A
6C
8B
5D
5C
5B
8F
9C
8E
6E
1ST POTHOLE COVER
AND RING NOT SHOWN
8G
6B
8H TYP
6B
6A
8I TYP
5E

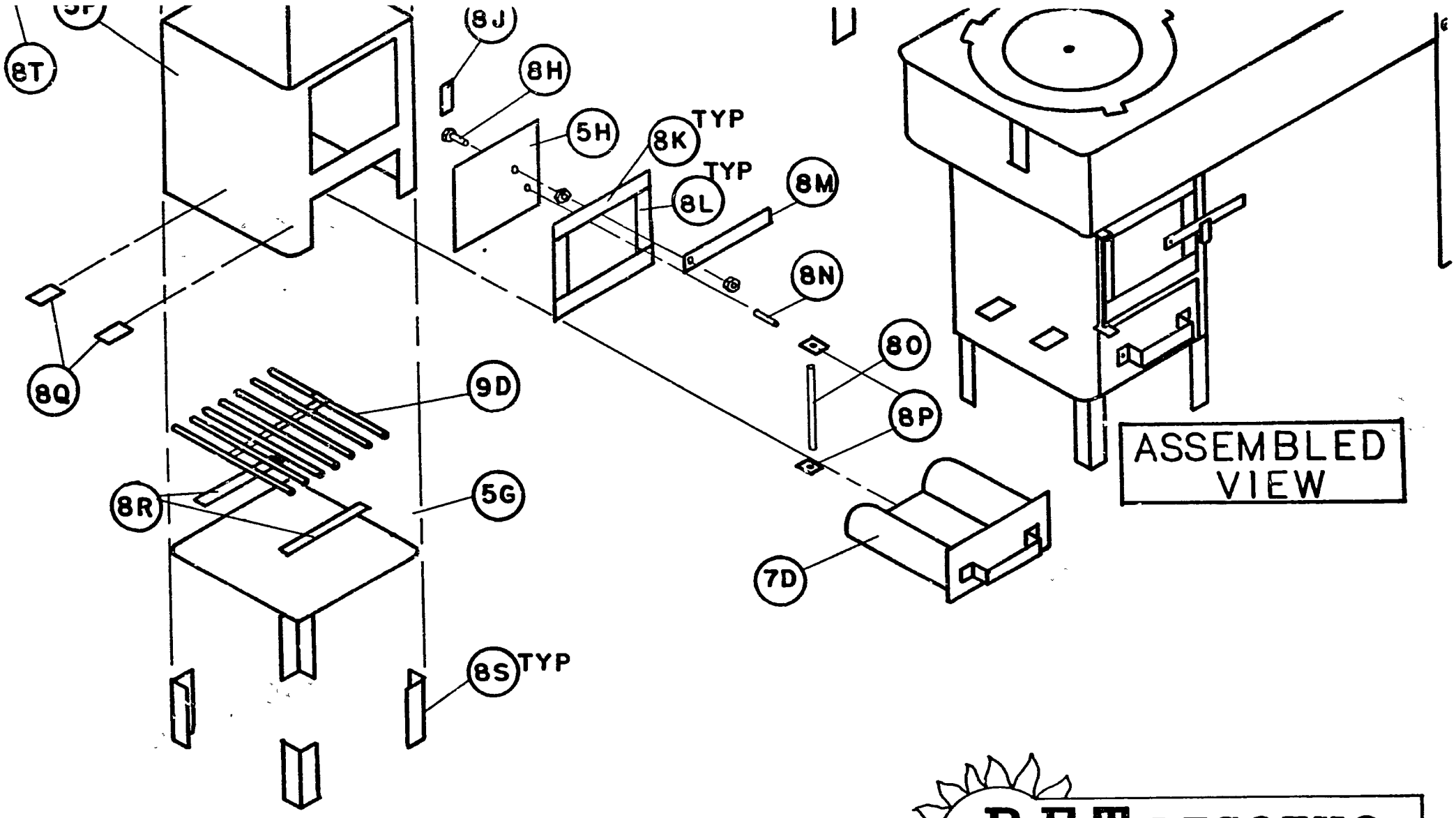

EXPLODED VIEW

NOTE: CIRCLED NUMBER-LETTERS REFER TO FIGURES IN PLANS, EXCEPT FOR NUMBER-LETTERS BEGINNING WITH 8, WHICH REFER TO BASIC PARTS SHOWN ONLY ON THIS PAGE AND LISTED IN SCHEDULE OF PARTS, FIGURE 4C.

RET LESOTHO
RENEWABLE ENERGY TECHNOLOGY
RURAL DEVELOPMENT

RET-3 STOVE: COMPLETED STOVE		
DRAWN BY: H. MITCHELL	DATE: 4/8/83	
SCALE:	UNITS:	PAGE: 8
MATERIAL:		
CHECKED BY:	DATE:	

COMPLETED STOVE

TOP VIEW

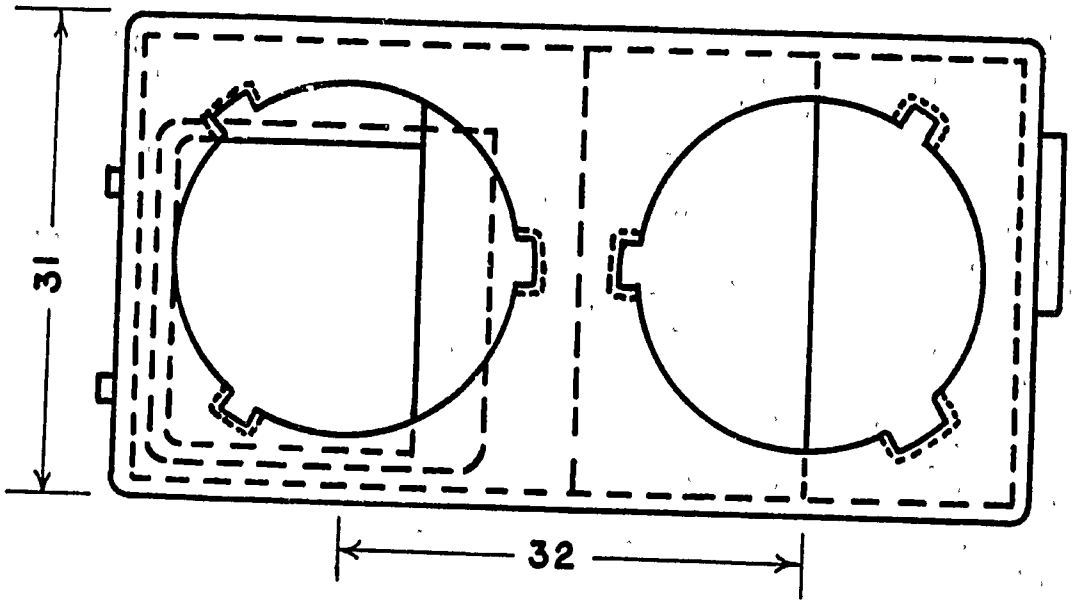

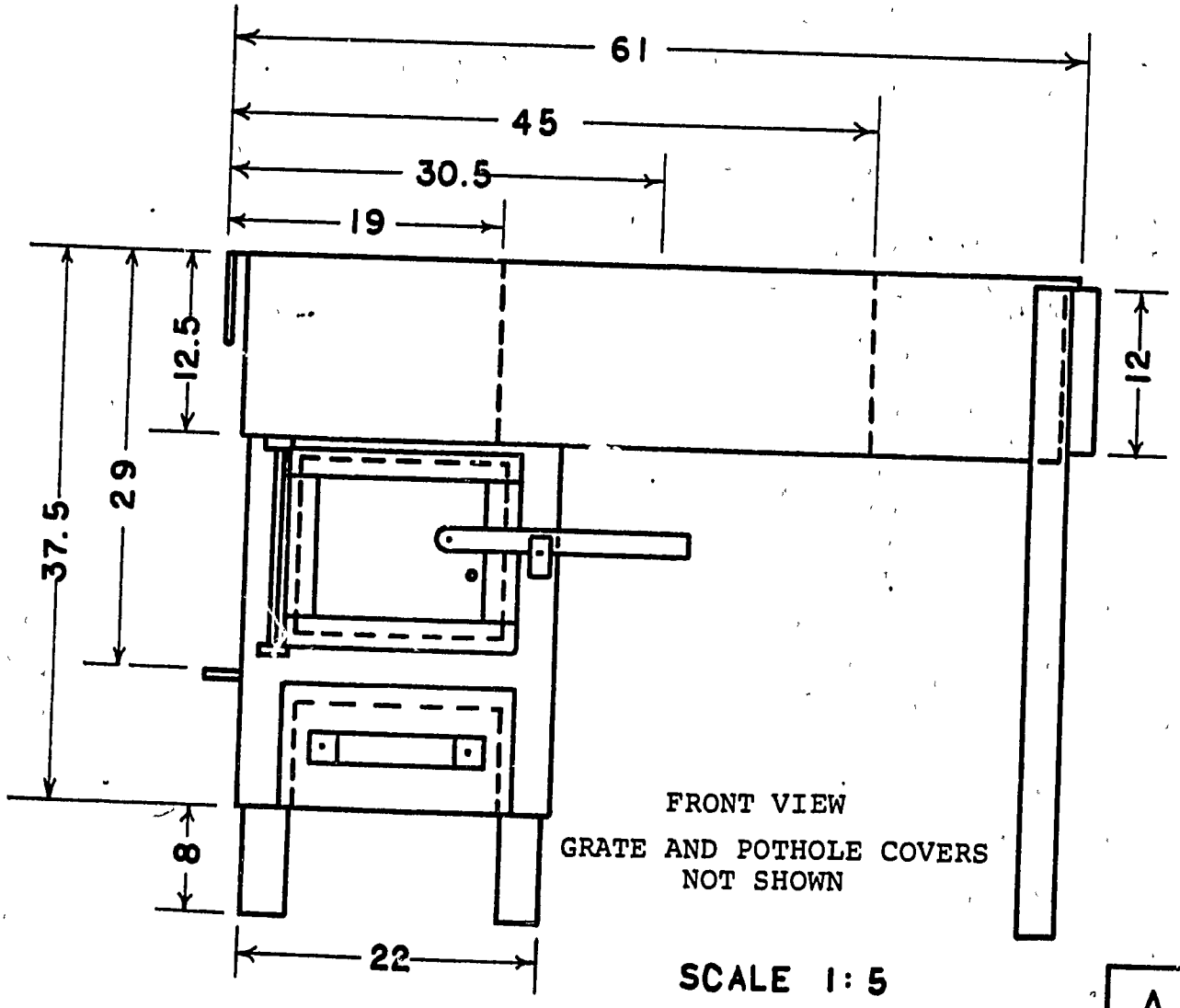

FRONT VIEW

GRATE AND POTHOLE COVERS NOT SHOWN

SCALE 1:5

A

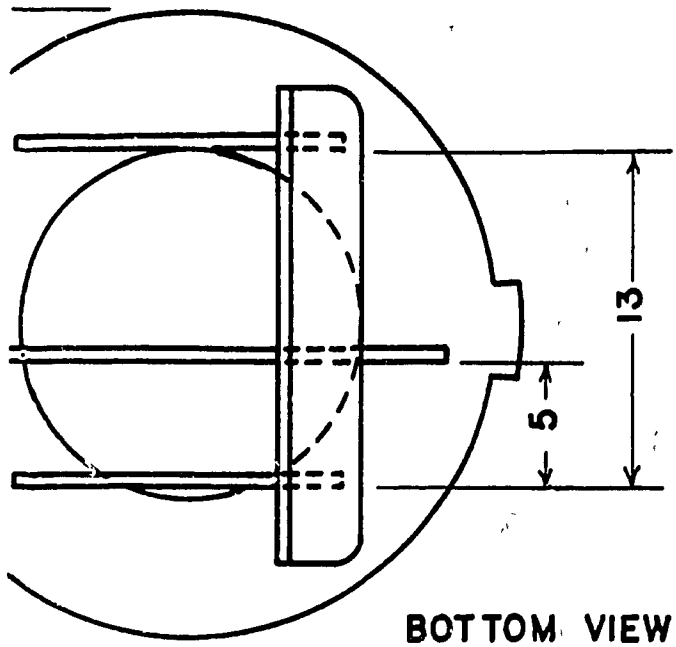

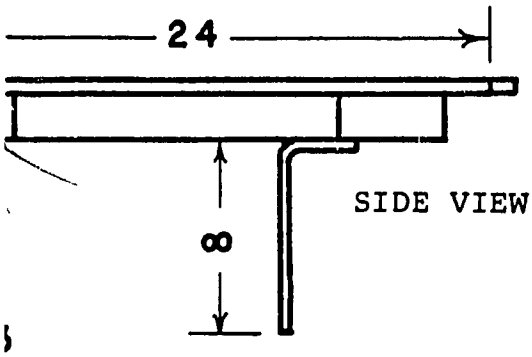

HOLE RING WITH
CES AND BAFFLE

B

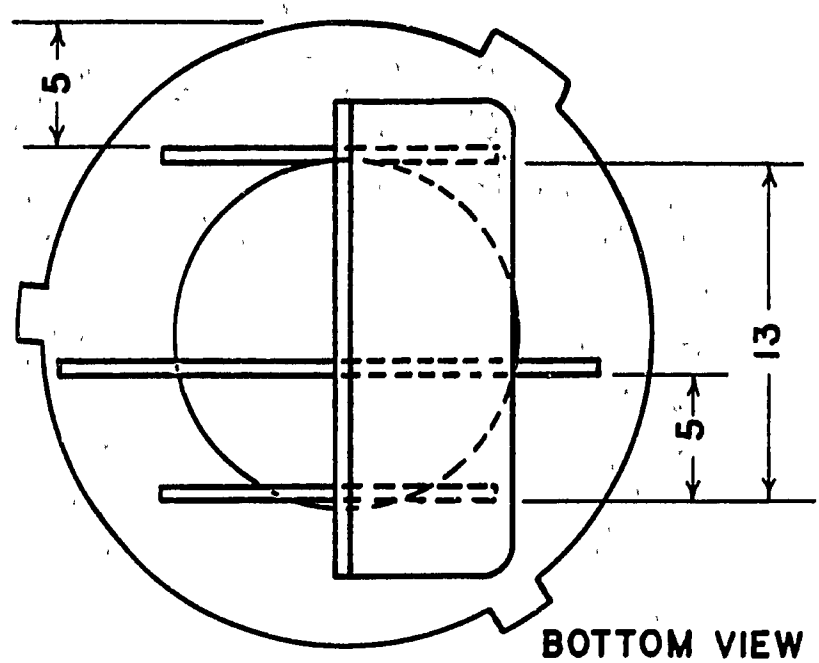

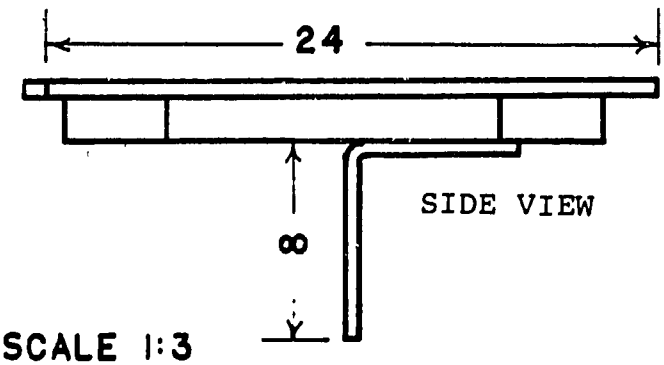

SCALE 1:3

2ND POTHOLE RING
WITH BRACES AND BAFFLE

C

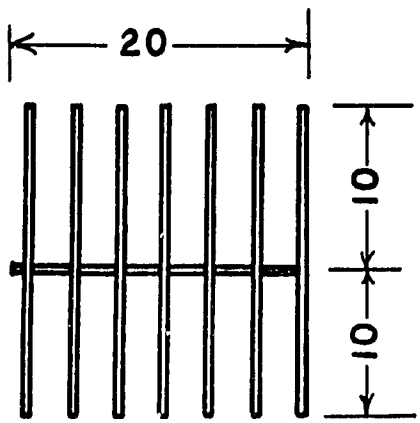

: 1:5

GRATE

D

RET LESOTHO
RENEWABLE ENERGY TECHNOLOGY
RURAL DEVELOPMENT

RET-3 STOVE: COMPLETED STOVE		
DRAWN BY: H. MITCHELL	DATE: 6/3/83	
SCALE: NOTED	UNITS: Cm	PAGE: 9
MATERIAL: STOCK SIZES		
CHECKED BY:	DATE:	

PRODUCTION JIGS AND TEMPLATES FOR RET-3 STOVE

INTRODUCTION

These jigs and templates allow for quick and accurate production of the RET-3 stove and assure that parts are interchangeable. Included in this section are:

- a schedule of parts,
- assembly instructions, and
- a complete set of plans.

CUTTING, FORMING AND ASSEMBLY INSTRUCTIONS

The list of tools and notes on cutting, drilling and welding from the stove section of these plans also applies to this section. Remember, these jigs and templates will be used many times, so they should be ruggedly built. Accuracy is important to assure that individual stove parts fit together perfectly. Following are specific instructions for individual jigs and templates:

Figure	
11	GRATE JIG: To line up slots in the support, clamp them together before grinding or cutting slots.
12A	STOVE BAFFLE JIG: As above, clamp supports together before cutting slots.
12B	POTHOLE COVER CENTER HOLE MARKING TEMPLATE: Do not weld inside the joint between clips and other pieces. Welds at this point would prevent the template from hooking accurately onto stove top edges. Drill template holes to fit shaft of the center punch used.
13A	DOOR TEMPLATE: Make sure welds on the template do not interfere with the torch used to cut door and ash catcher openings.
13B	WATER TIN HOLDER CLIP JIG: Bend uprights 90° about 3cm from the ends.
14 & 15	DOOR FRAME JIG and DOOR JIG: Weld these so as not to interfere with placing door parts in jigs. Holes are sized for the center punch, as above.
16A & 16B	OUTER and INNER POTHOLE TEMPLATES: These are best cut with a torch. Finished edges must be smooth and even.
17C	CLAMP JIG FOR DRILLING HINGE CLIPS AND HANDLES: The base of this jig is sized to fit the drill press vise used. The clamp is a U-shaped piece of flat bar. Clips are welded onto one side of each end of the U, and a stop piece onto one clip, to position the stove part accurately. The other end of the U can move with pressure from the drill press vise jaw, clamping and unclamping the part. Make sure welds do not interfere with positioning the parts accurately.
17D	STOVE BODY LEG HOLE MARKING TEMPLATE: Weld this on the ends only.

SCHEDULE OF PARTS FROM STOCK SIZES FOR ONE SET OF JIGS AND TEMPLATES

FIGURE	NAME OF PART	STOCK SIZE	NUMBER NEEDED	LENGTH (in cm)
11	GRATE JIG	25x25x5 angle iron		
	SUPPORTS		2	100
	BRACES		2	15
12A	STOVE BAFFLE JIG	10x30 flat bar		
	SUPPORTS		2	46
	BRACES		2	25
12B	POTHOLE COVER CENTER HOLE MARKING TEMPLATE	25x5 flat bar		
	LONG BRACE		1	49
	SHORT BRACES		2	14
	CLIPS		3	5
13A	DOOR TEMPLATE	10mm Ø round		
	CENTER PIECES		3	15.5
	SIDE PIECES		2	25
13B	WATER TIN HOLDER CLIP JIG	25x5 flat		
	UPRIGHTS		2	33
	LOWER HORIZONTAL PIECE		1	20
	MIDDLE HORIZONTAL PIECE		1	20
	TOP HORIZONTAL PIECE		1	6.5
13C	SAUCEPAN BAFFLE JIG	10x30 flat bar	1	17
13D	GRATE SUPPORT JIG	10mm Ø round		
	LEGS	25x5 flat bar	4	8.5
	BRACES		3	18
14	DOOR FRAME JIG	25x5 flat bar		
	TOP & BOTTOM PIECES		2	18
	SIDES		2	9
	CLIPS		12	2.5
15	DOOR JIG			
	TOP & BOTTOM PIECES	25x3 flat bar	2	20
	SIDES		2	12
	BRACES	25x5 flat bar	3	17
	CLIPS		6	2.5
16A	OUTER POTHOLE TEMPLATE	6mm plate	1	--
16B	INNER POTHOLE TEMPLATE	6mm plate	1	--
17A	POTHOLE BAFFLE TEMPLATE	10mm Ø round	1	36
17B	STOVE EXIT RING JIG	20x5 flat bar	1	7
17C	CLAMP JIG FOR DRILLING HINGE CLIPS & DOOR HANDLES	20x5 flat bar		
	BASE		1	*
	CLAMP		1	8
	CLIPS		2	2
	STUD		1	1
17D	STOVE BODY LEG HOLE MARKING TEMPLATE	20x5 flat bar		
	BODY PIECES		2	9
	STOP		1	2.5

* size to fit drill press vise

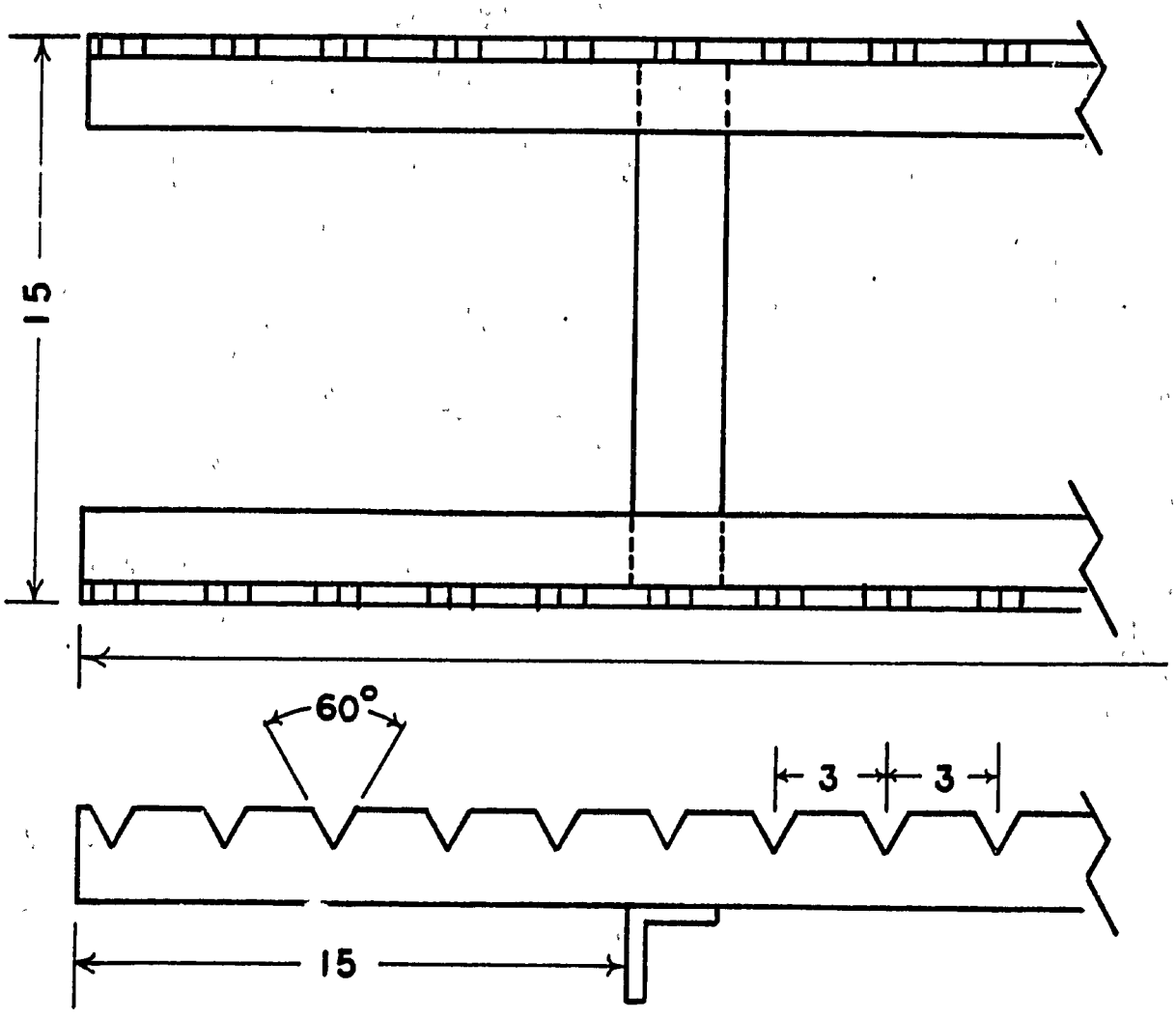

GRAT

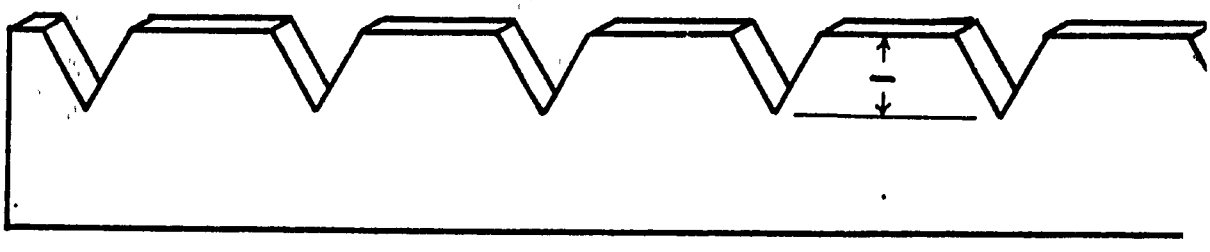

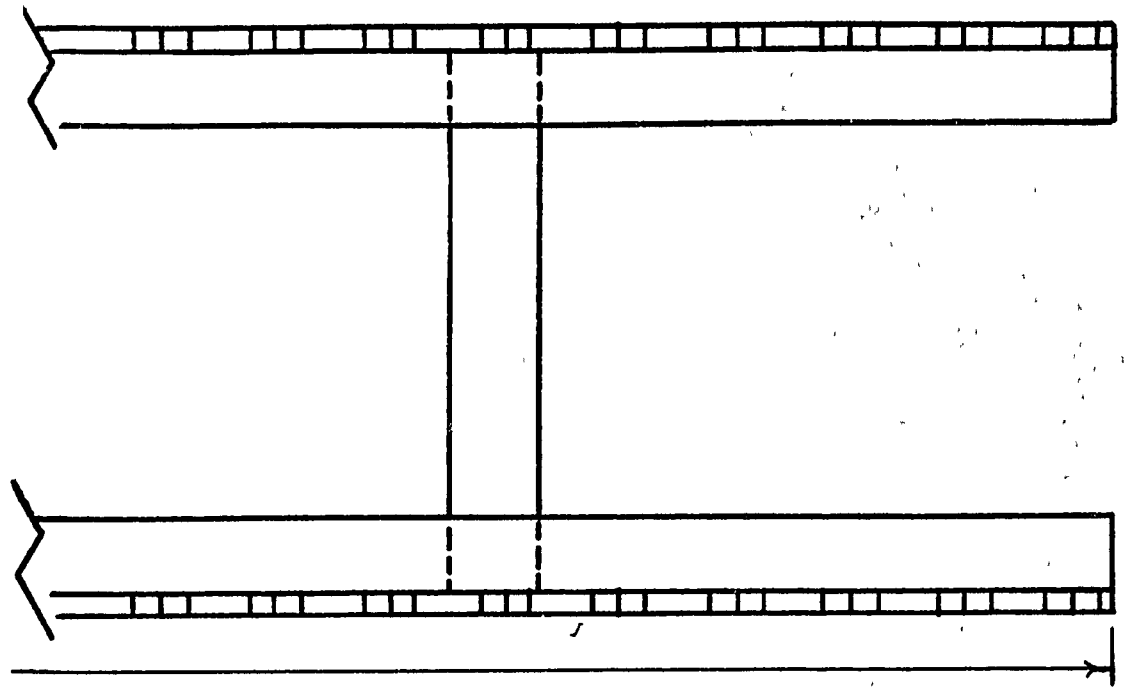

TOP VIEW

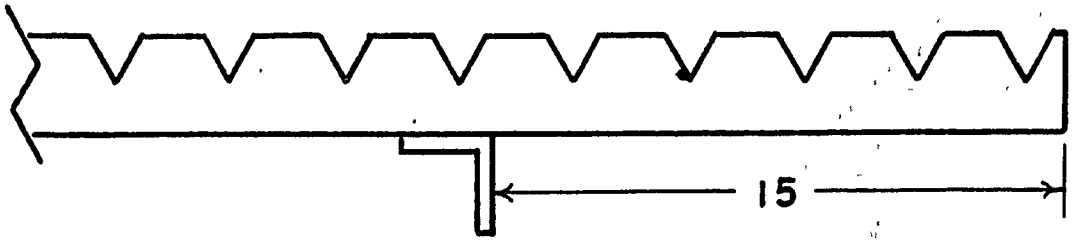

SIDE VIEW

JIG

SIDE VIEW

FULL SCALE

RET LESOTHO
RENEWABLE ENERGY TECHNOLOGY
RURAL DEVELOPMENT

RET-3 STOVE: GRATE JIG		
DRAWN BY: H. MITCHELL	DATE: 4/6/83	
SCALE: 1:2	UNITS: Cm	PAGE: 11
MATERIAL: 25 X 5 ANGLE		
CHECKED BY:	DATE:	

STOVE BAFFEL JIG

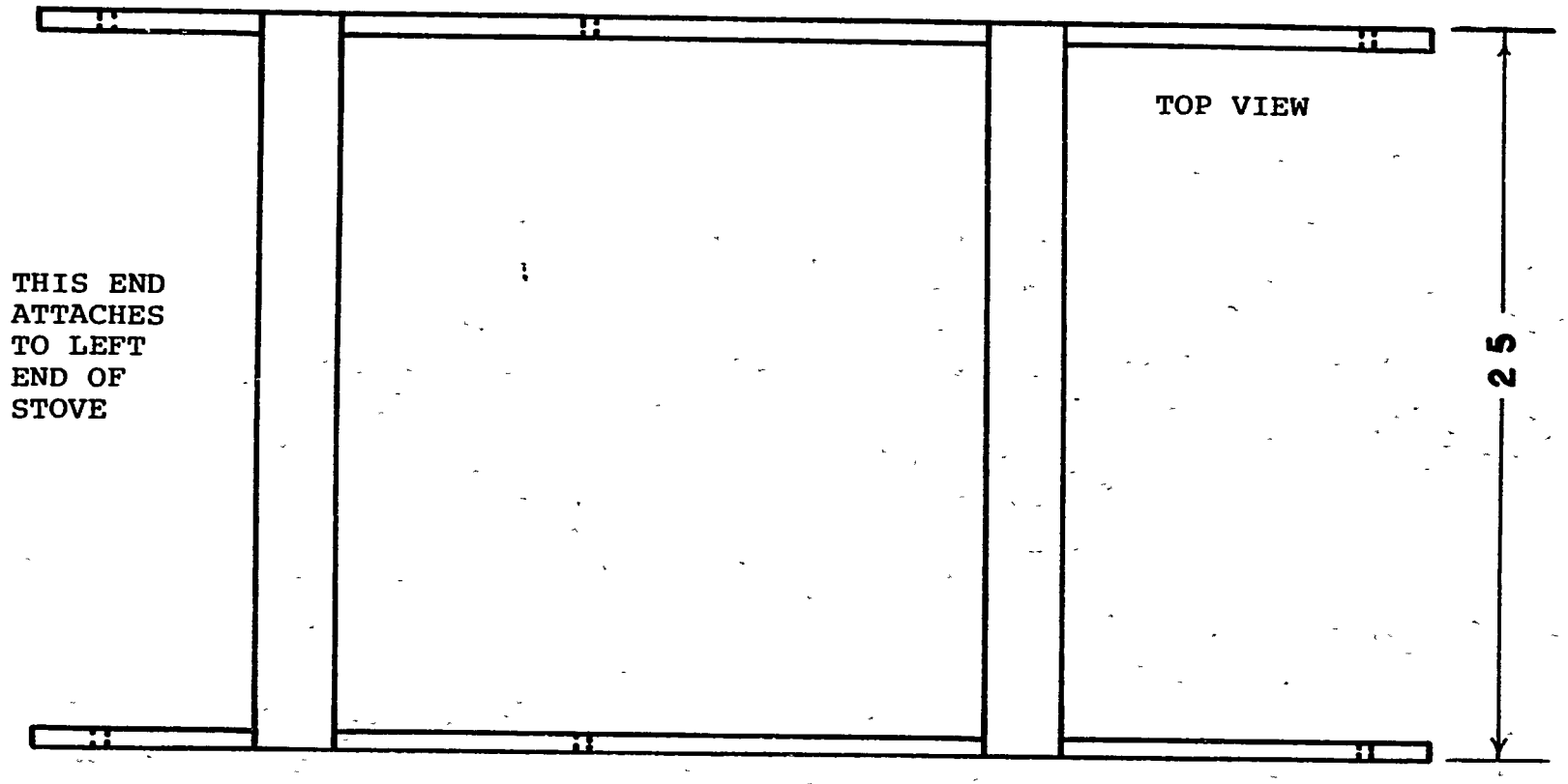

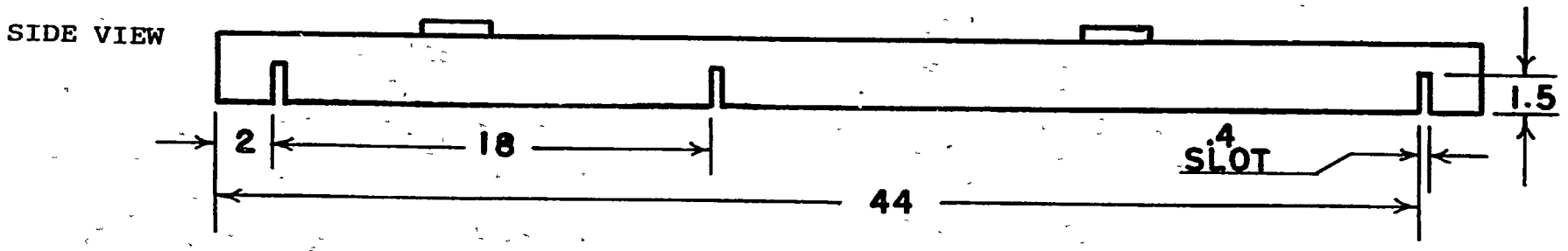

A

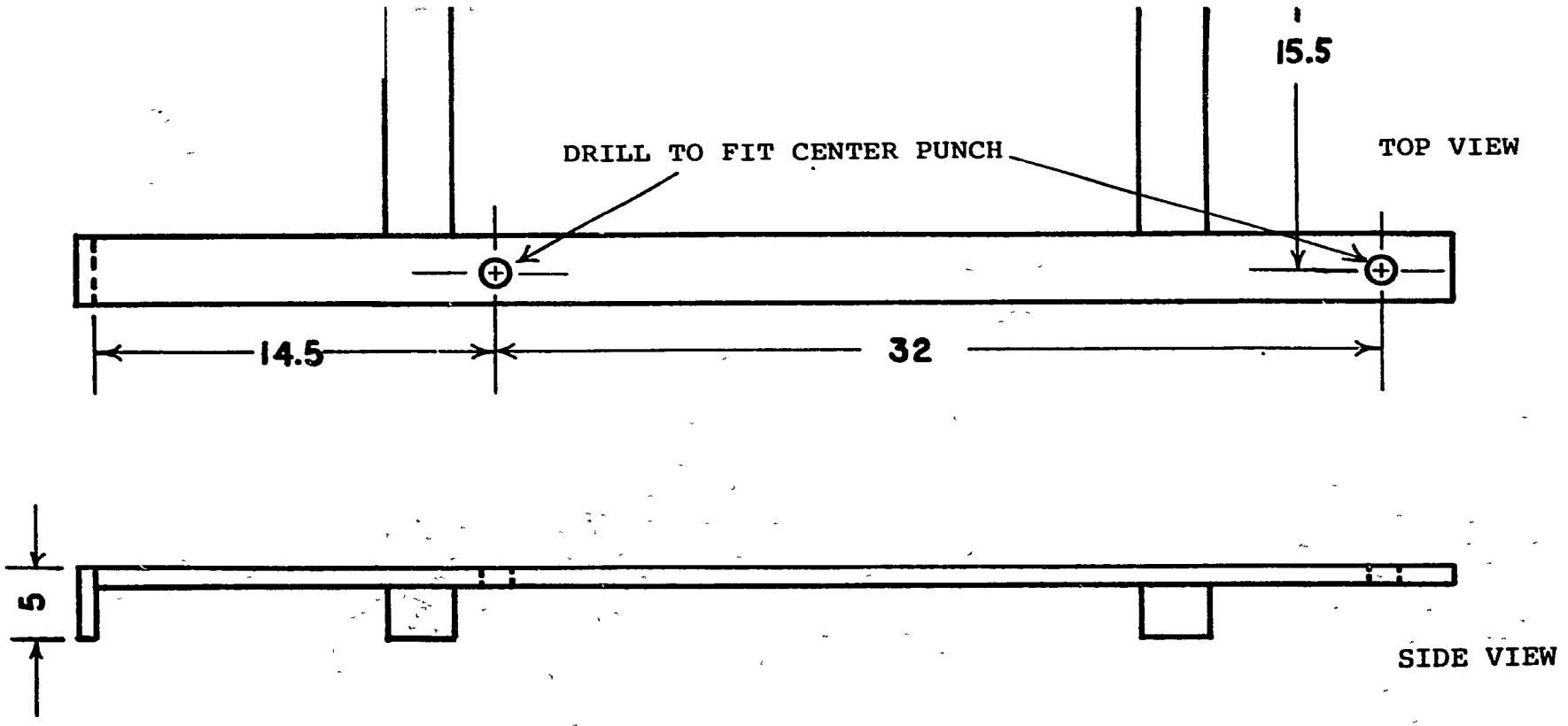

POT HOLE COVER CENTER HOLE MARKING TEMPLATE

B

RET LESOTHO
RENEWABLE ENERGY TECHNOLOGY
RURAL DEVELOPMENT

RET-3 STOVE: JIGS & TEMPLATES		
DRAWN BY: H. MITCHELL	DATE: 4/8/83	
SCALE: 1 : 2.5	UNITS: Cm	PAGE: 12
MATERIAL: STOCK STEEL		
CHECKED BY:	DATE:	

A

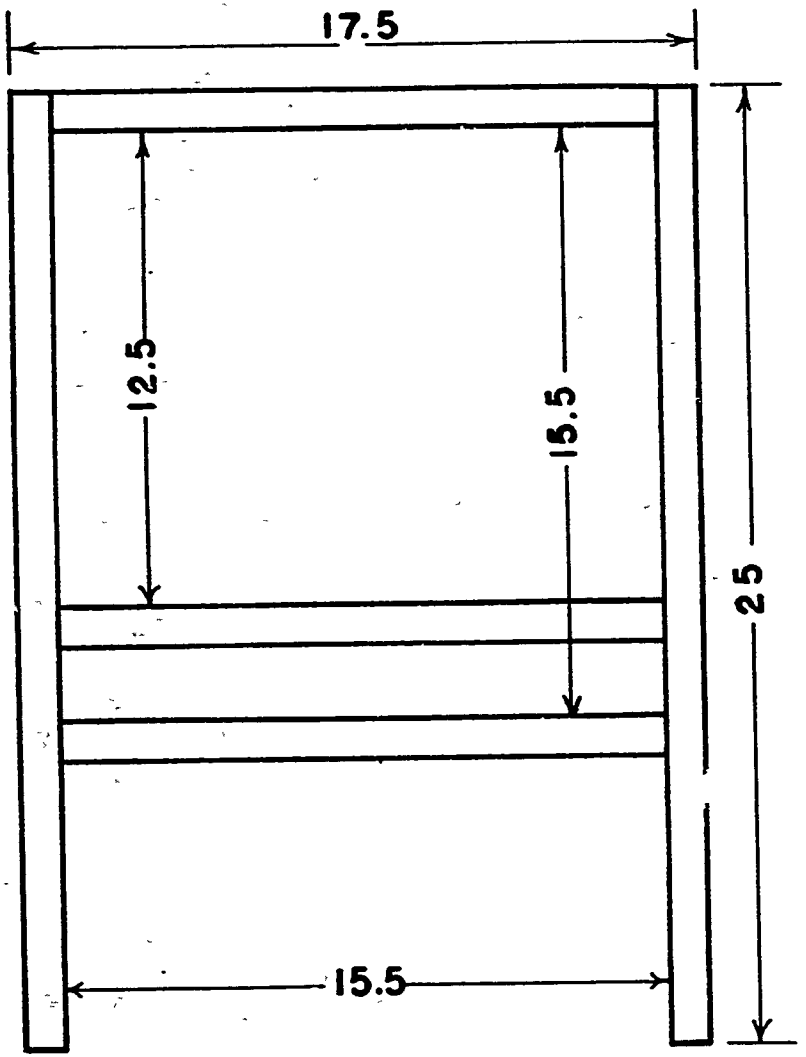

DOOR TEMPLATE

WATER TIN HOLDER CLIP JIG

B

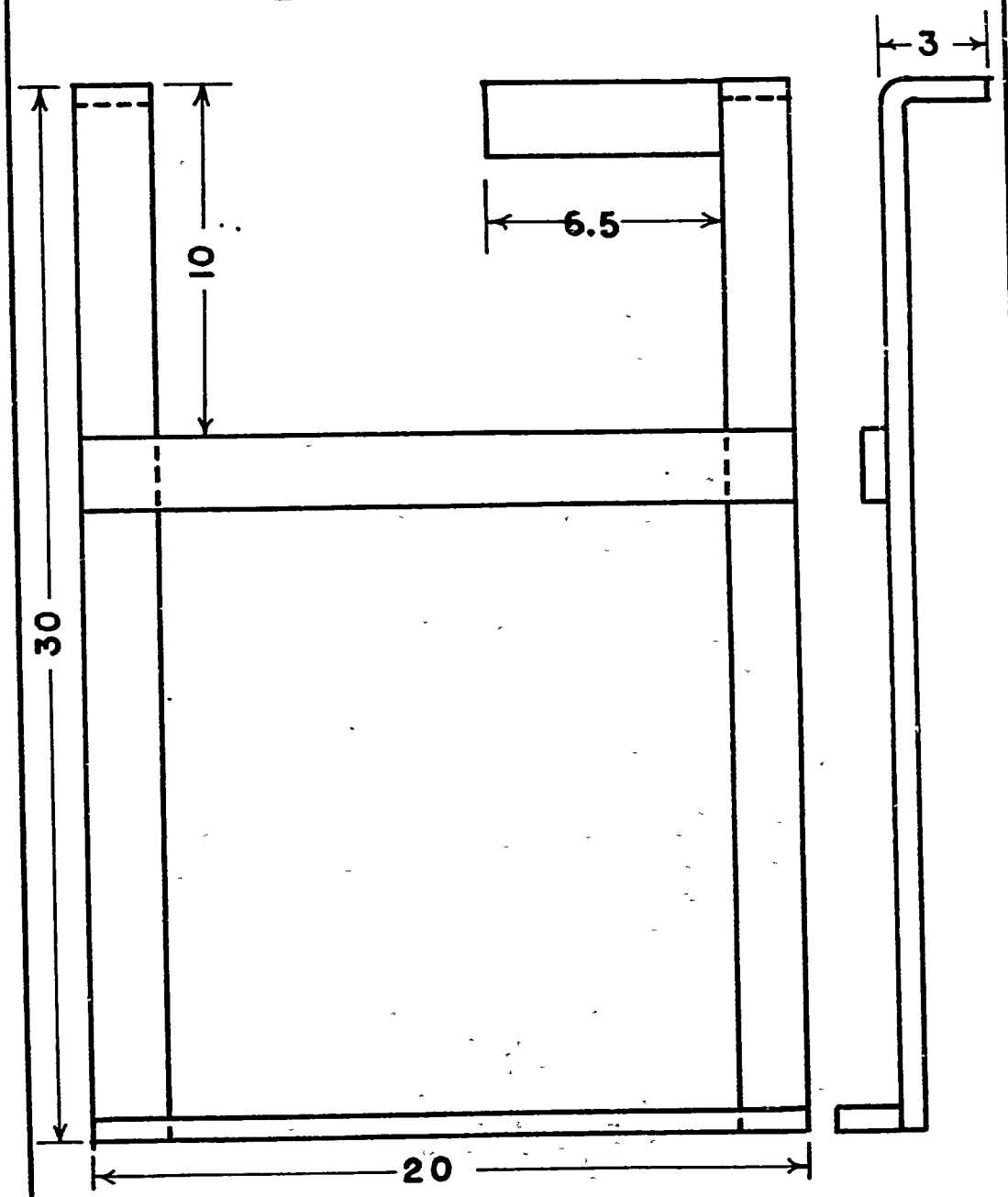

C

D

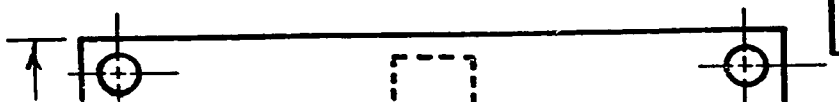

108

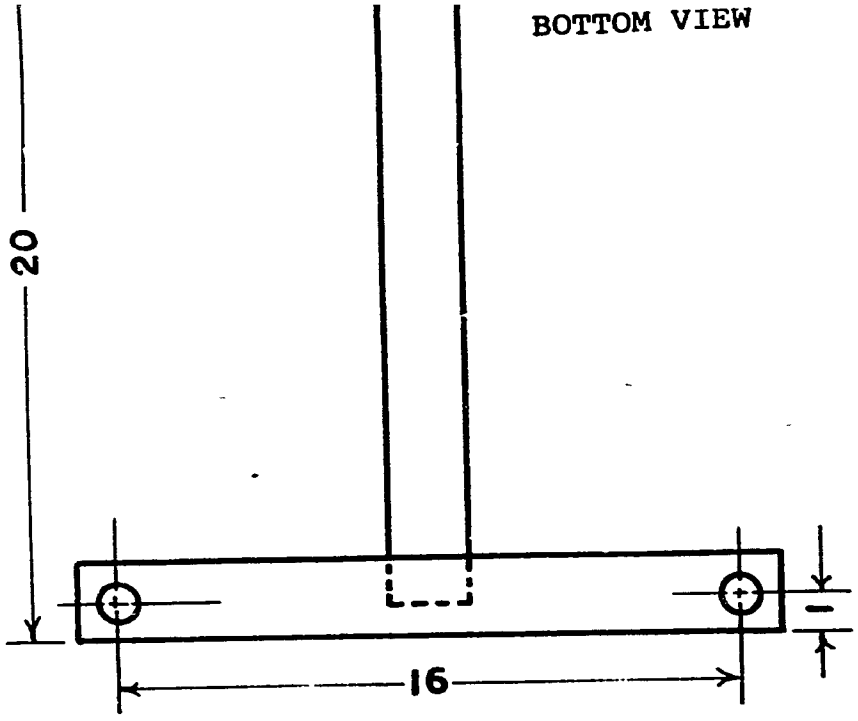

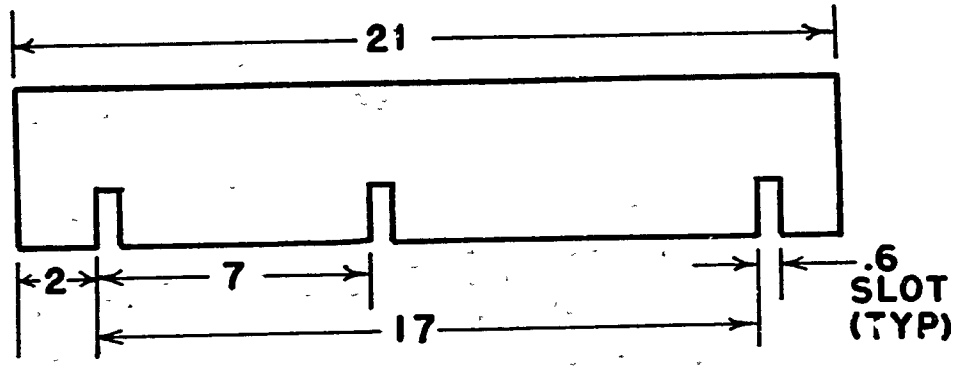

SAUCE PAN BAFFLE JIG

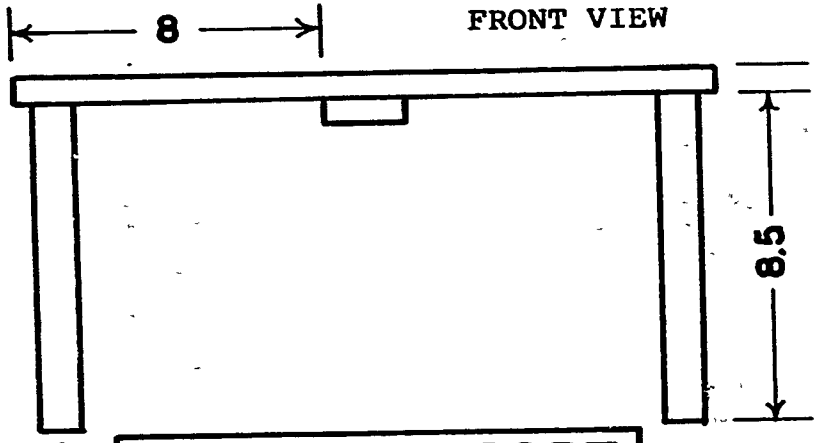

GRATE SUPPORT JIG

RET LESOTHO
RENEWABLE ENERGY TECHNOLOGY
RURAL DEVELOPMENT

RET-3 STOVE: JIGS AND TEMPLATES		
DRAWN BY: H. MITCHELL	DATE: 5/15/83	
SCALE: 1:2	UNITS: Cm	PAGE: 13
MATERIAL: STOCK STEEL		
CHECKED BY:	DATE:	

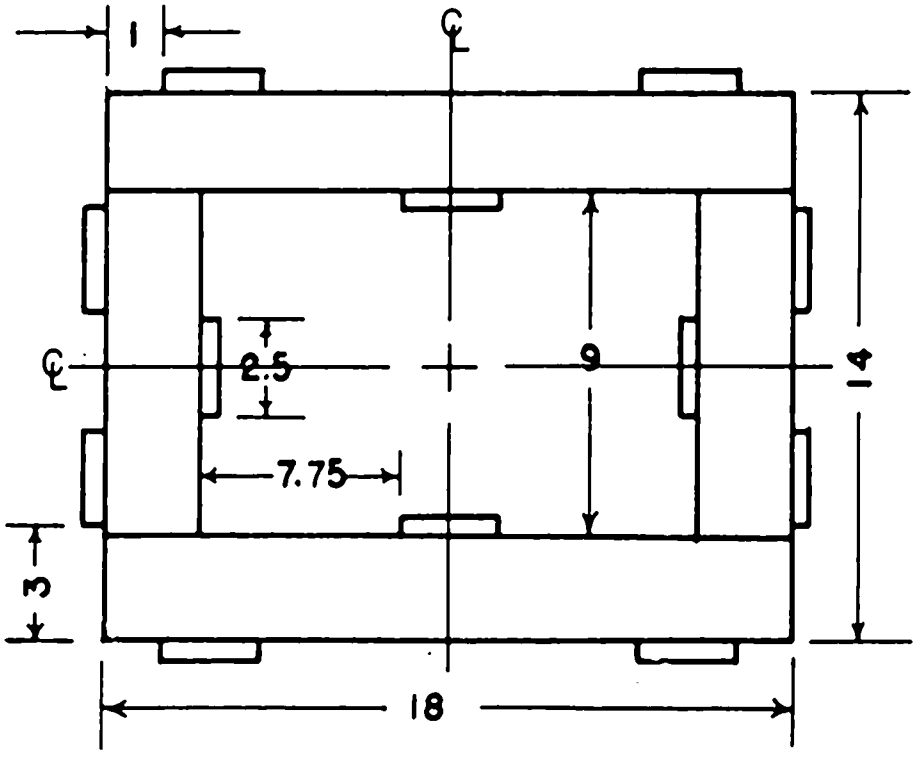

TOP VIEW

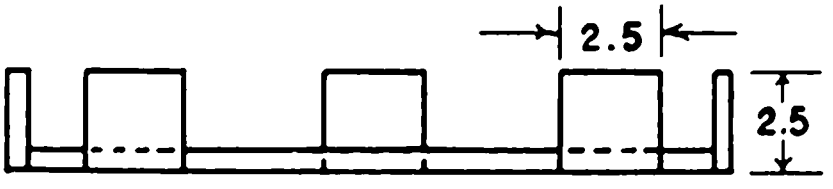

FRONT VIEW

DOOR FRAME JIG

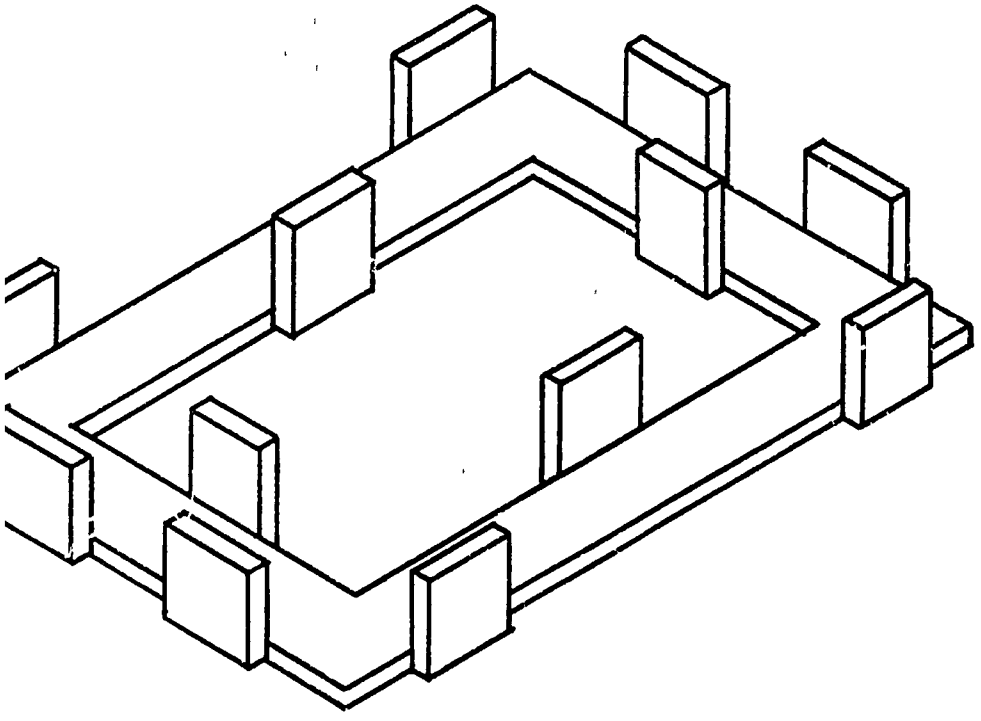

ISOMETRIC VIEW

RET LESOTHO
RENEWABLE ENERGY TECHNOLOGY
RURAL DEVELOPMENT

RET-3 STOVE: DOOR FRAME JIG		
DRAWN BY: H. MITCHELL	DATE: 4/10/83	
SCALE: 1 : 2	UNITS: Cm	PAGE: 14
MATERIAL: STOCK STEEL		
CHECKED BY:	DATE:	

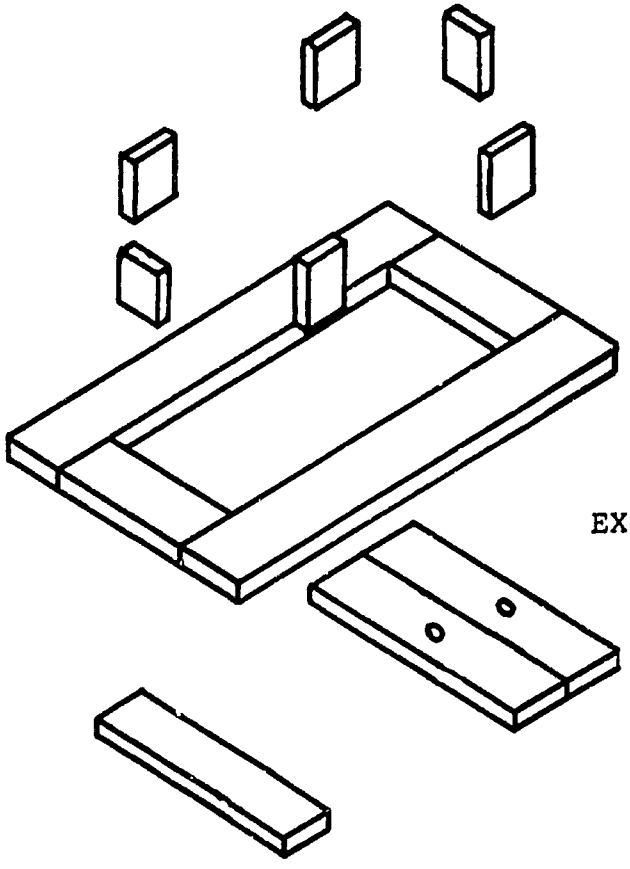

EXPLODED VIEW

ASSEMBLED VIEW

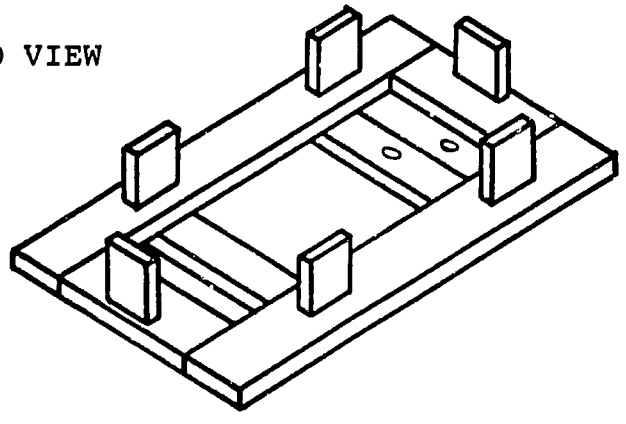

DOOR J1

112

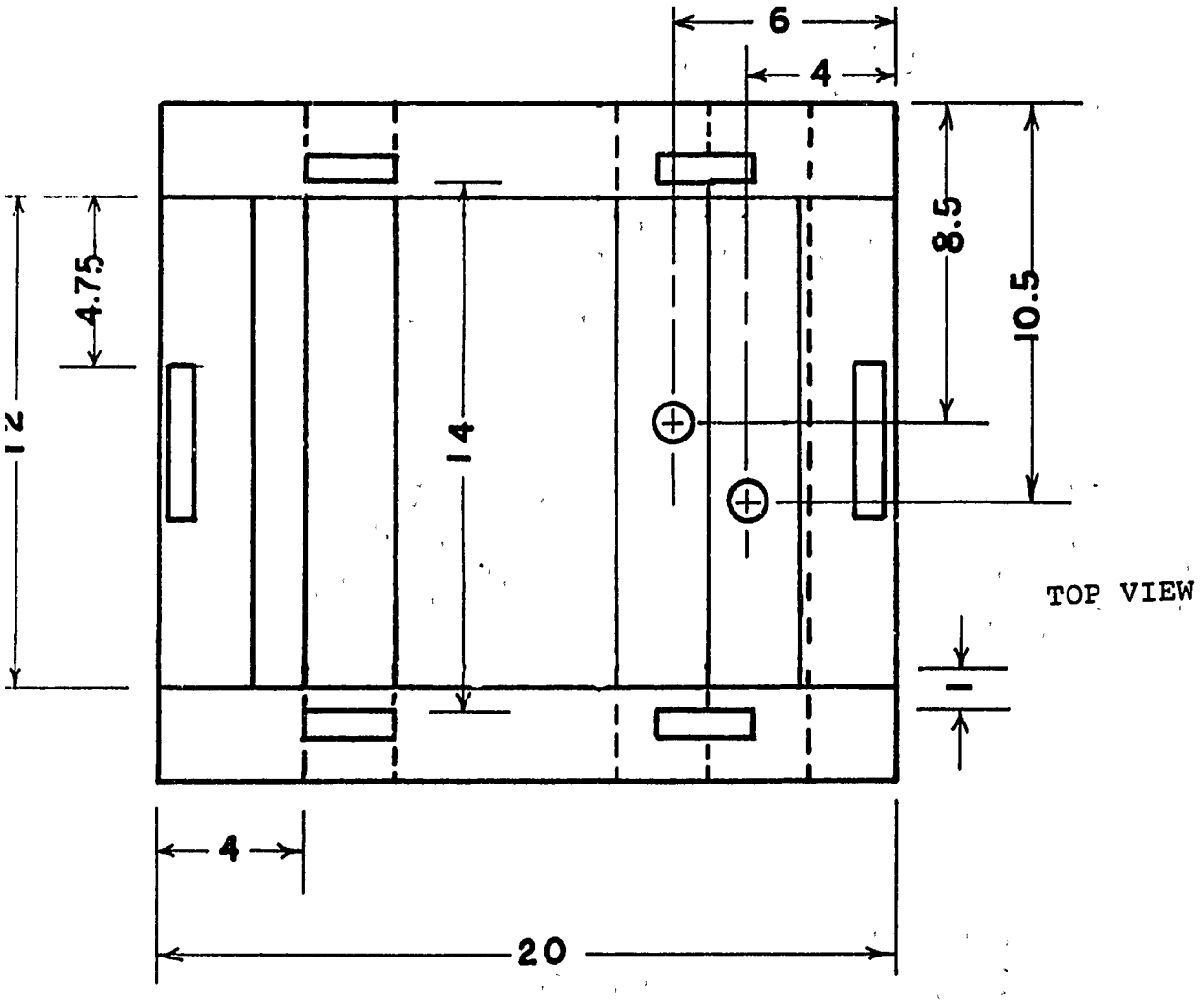

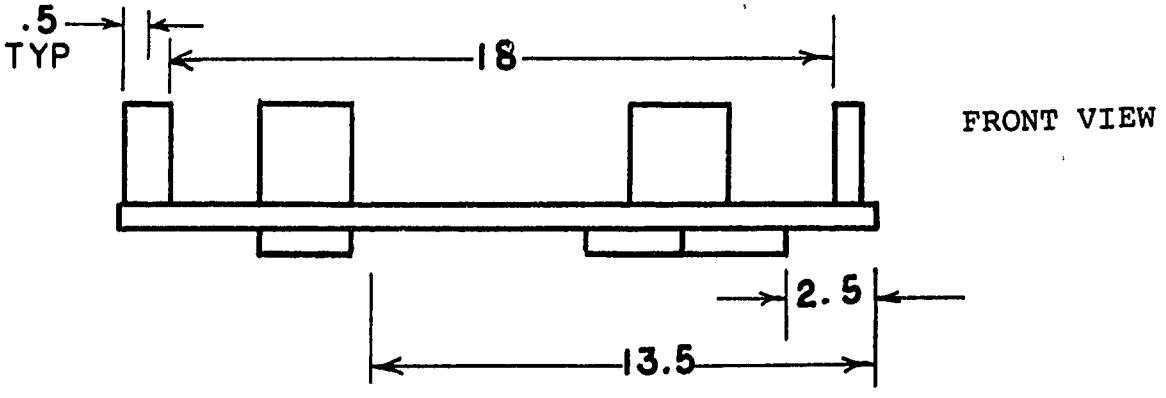

RET LESOTHO
RENEWABLE ENERGY TECHNOLOGY
RURAL DEVELOPMENT

RET-3 STOVE: DOOR JIG		
DRAWN BY: H. MITCHELL	DATE: 5/14/83	
SCALE: 1:2	UNITS:	PAGE: 15
MATERIAL: STOCK STEEL		
CHECKED BY:	DATE:	

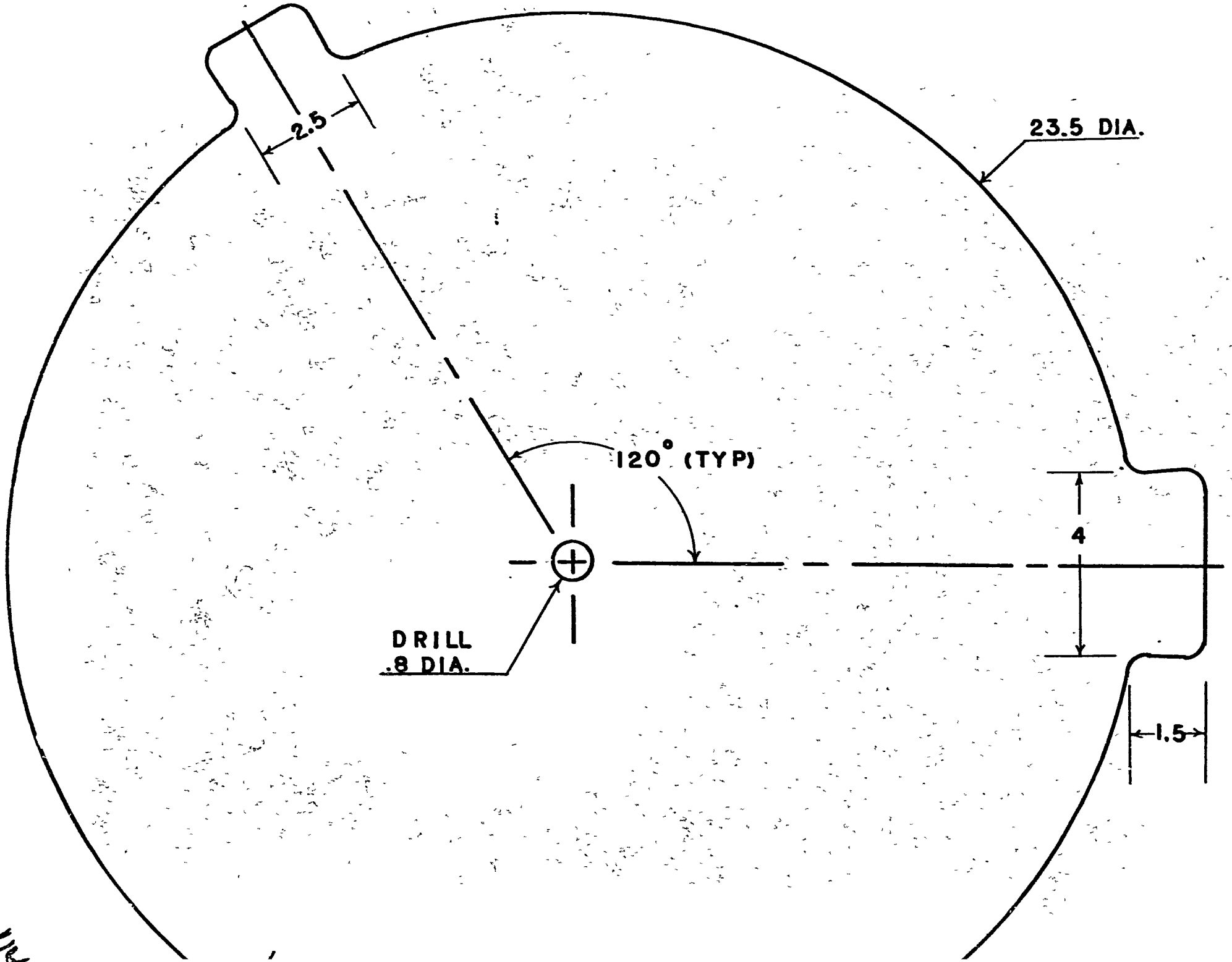
2.5
23.5 DIA.
120° (TYP)
4
DRILL
.8 DIA.
1.5

OUTER TEMPLATE

A

INNER TEMPLATE

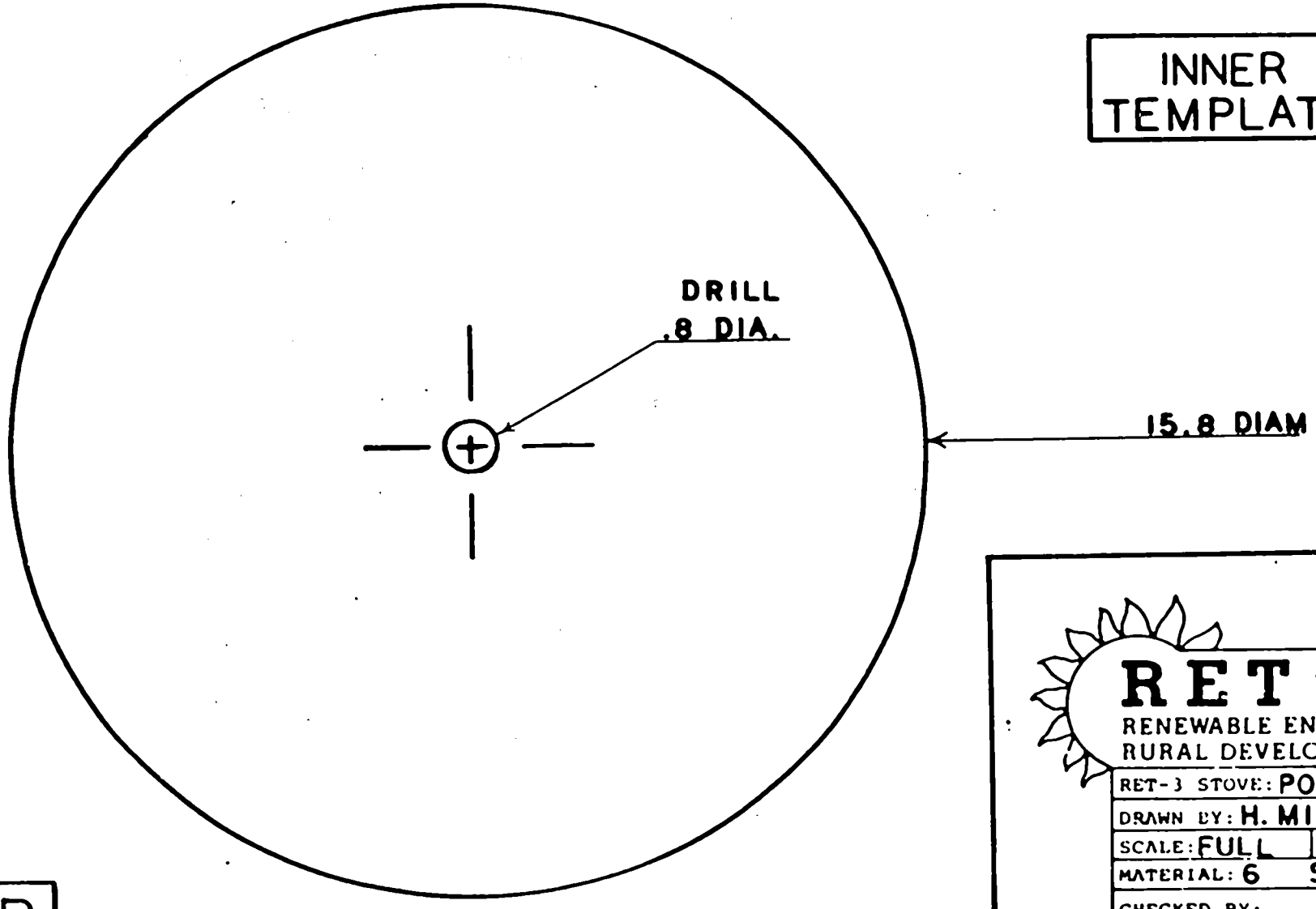

B

RET LESOTHO
RENEWABLE ENERGY TECHNOLOGY
RURAL DEVELOPMENT

RET-3 STOVE: POTHOLE TEMPLATES		
DRAWN BY: H. MITCHELL	DATE: 4/8/83	
SCALE: FULL	UNITS: Cm	PAGE: 16
MATERIAL: 6 STEEL PLATE		
CHECKED BY:	DATE:	

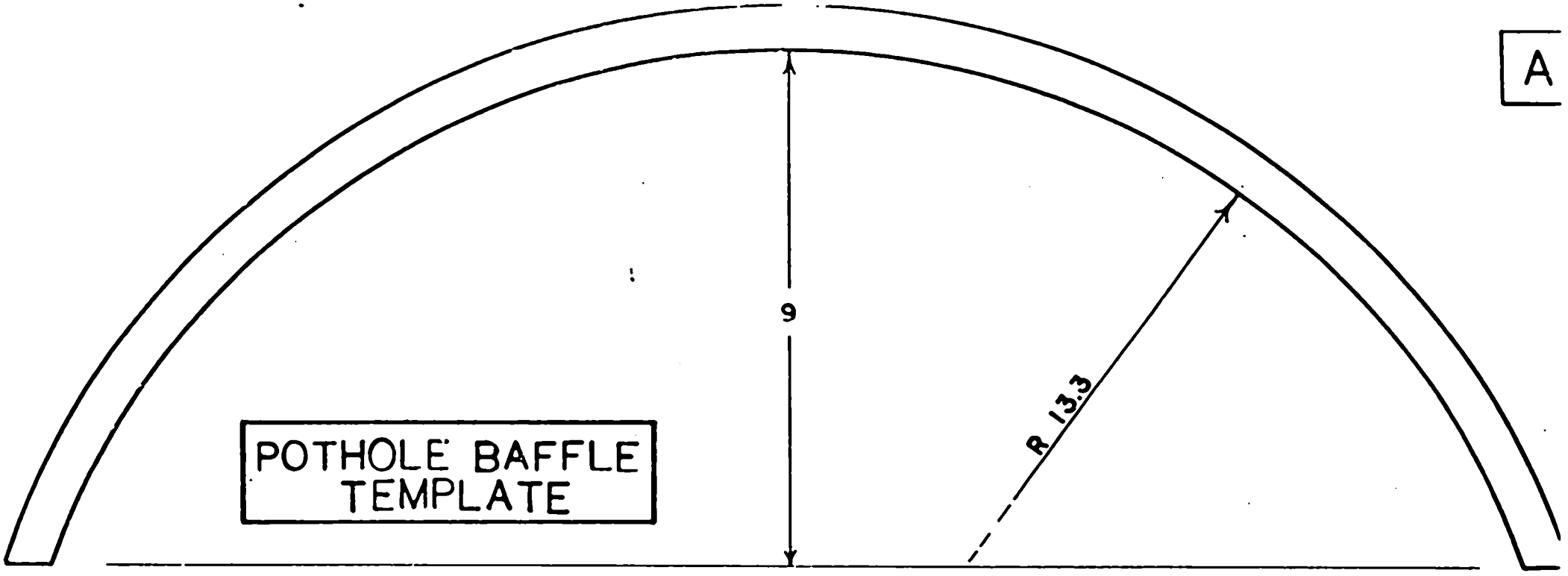
A
9
R 13.3
POTHOLE BAFFLE
TEMPLATE

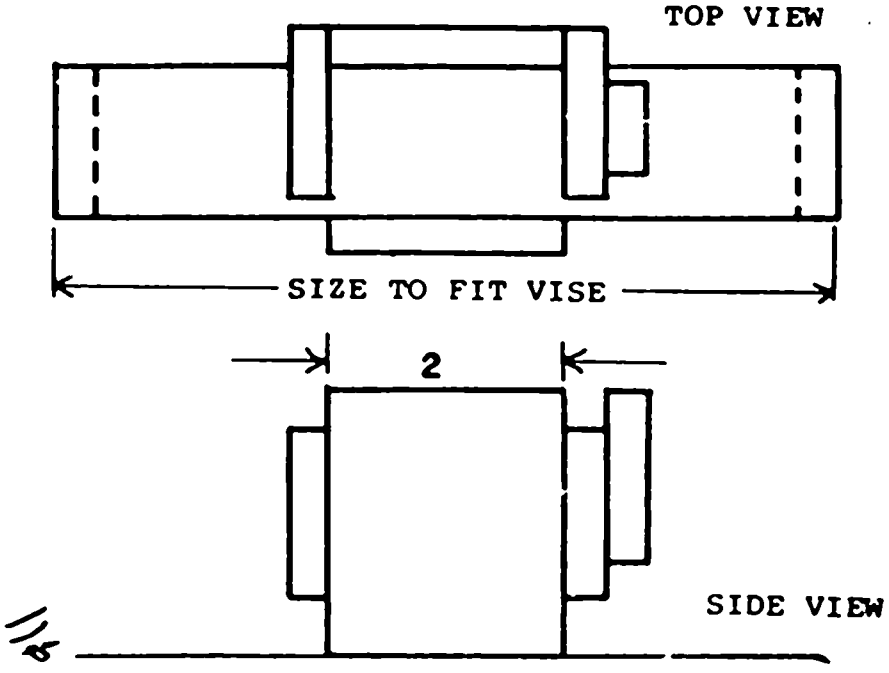
TOP VIEW
SIZE TO FIT VISE
2
SIDE VIEW

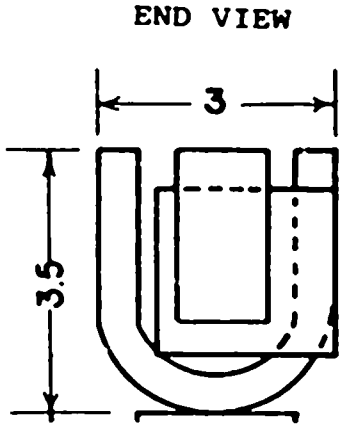
END VIEW
3
3.5

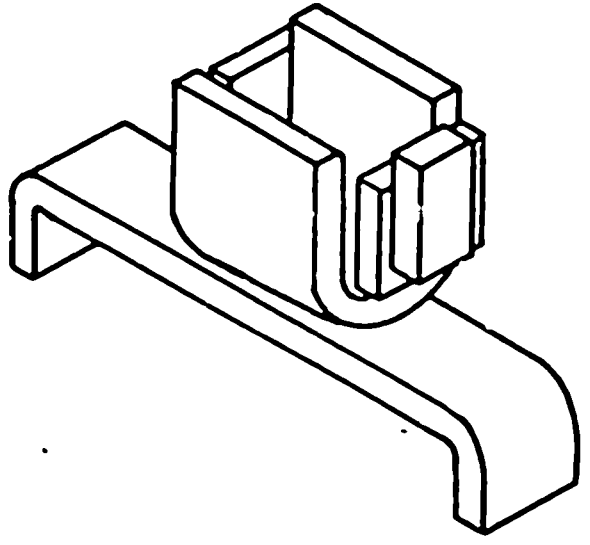
ASSEMBLED VIEW

C

CLAMP JIG FOR DRILLING HINGE CLIPS AND HANDLES

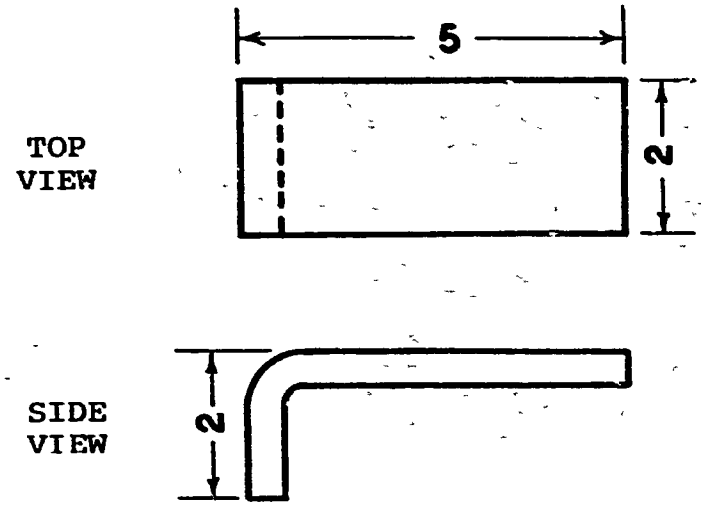

STOVE EXIT RING JIG

B

STOVE BODY LEG HOLE MARKING TEMPLATE

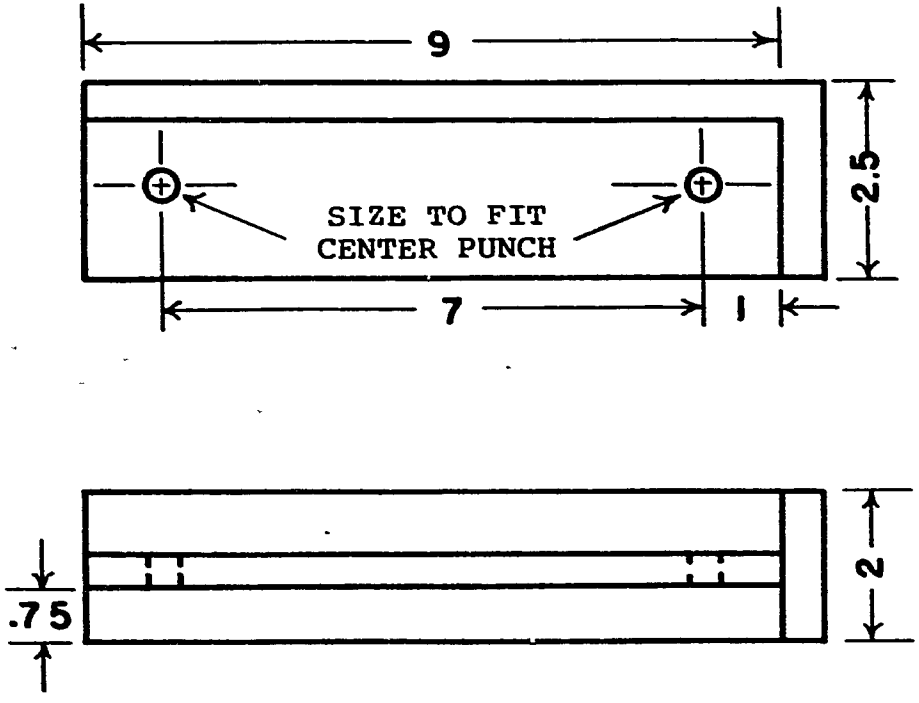

D

RET LESOTHO
RENEWABLE ENERGY TECHNOLOGY
RURAL DEVELOPMENT

RET-3 STOVE: JIGS & TEMPLATES		
DRAWN BY: H. MITCHELL	DATE: 4/8/83	
SCALE: FULL	UNITS: Cm	PAGE: 17
MATERIAL: STOCK STEEL		
CHECKED BY:	DATE:	

RET-3 CHIMNE

INTRODUCTION

The RET Chimney System is designed for use with the RET-3 stove. However, it may be used with any stove having a small firebox (less than 30,000cm³). The system is design for a thatch or metal roof. Flammable roof materials are protected by the outer stovepipe section which forms a cooling air space between the hot inner chimney pipe and the roof.

Included in this section are:

- cutting, forming and assembly instructions,
- user notes, and
- a complete set of plans, including a jig and compass for production.

CUTTING, FORMING AND ASSEMBLY INSTRUCTIONS

Materials required for the RET Chimney System (pages 19 and 20) and the jig and compass (page 21) are listed with the drawing of each part. The list of tools and notes on cutting, drilling and welding apply to this section as well. Following are notes on fabricating the chimney system.

Figure

19A & 19B	CHIMNEY CAP and WEATHER COLLAR: Use compass (Figure 21B) to mark cap and collar for cutting. Drill and rivet the cap as shown. Leave collar as shown until assembled to stovepipe.
19C	FLASHING: Cut as shown leaving center hole to be cut and fitted when assembled to stovepipe.
19D & 19E	GROUNDING STAKE: The length of the stake will vary, depending on the type of stove used. The pointed end of the stake should be imbedded at least 20cm into the ground; the other end firmly attached to the elbow or bottom of the stovepipe.

SYSTEM

19F & 19G CLIP FOR CHIMNEY CAP and CLIP FOR STOVEPIPE: Cut, fold, bend and drill clips as indicated. Predrill stovepipes for the clips. Drill holes in the wide end of the inner stovepipe. The STOVEPIPE DRILLING JIG (Figure 21A) holds the pipe for convenience of drilling holes. Position clips as shown; attach with pop rivets; drill the second hole in the clip (using 2nd hole in stovepipe as guide). Attach a second pop rivet in the hole just drilled.

The outer stovepipe should have 3 clips on each end. Adjust clips so that inner stovepipe slides snuggly inside clamp; drill and rivet the chimney cap to clips, as shown.

20 RET CHIMNEY SYSTEM ASSEMBLED: Assemble chimney system as shown through the thatch or metal roof. Clearances listed in drawing are very important for the safe and efficient operation of the stove and chimney systems.

USER NOTES

The chimney must be cleaned inside at least every two months to prevent buildup of residue. To clean, separate chimney from stove and remove residue with a stiff brush.

Check the chimney for leaks, rust or holes and replace parts as needed. It is important to have a minimum gap of 2cm between the weather collar and outer stovepipe to prevent overheating.

When fly ash is produced, place a screen around the inner stovepipe opening below the cap to protect thatch.

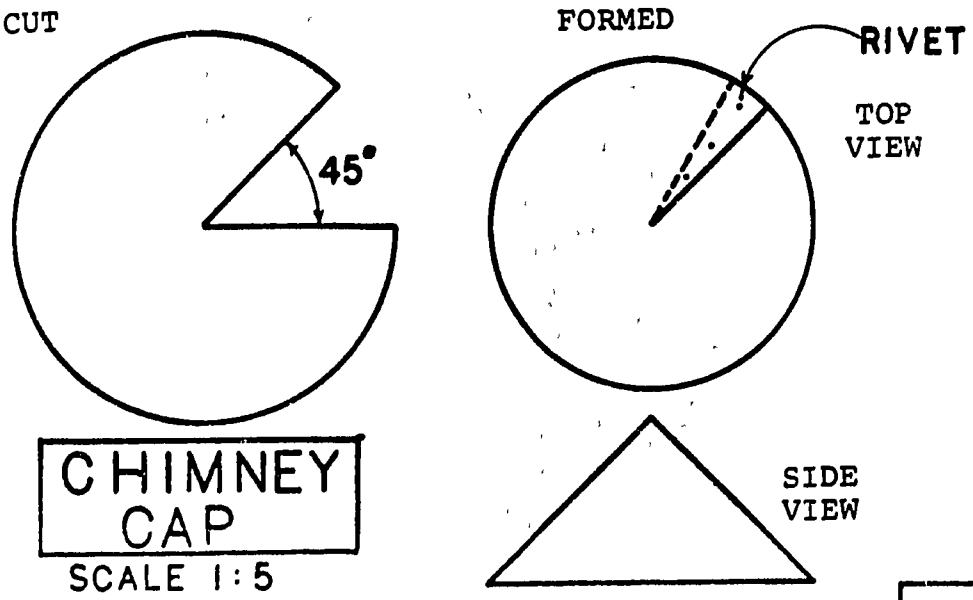

CHIMNEY CAP

SCALE 1:5

MATERIAL: 0.5mm GALVANIZED STEEL

A

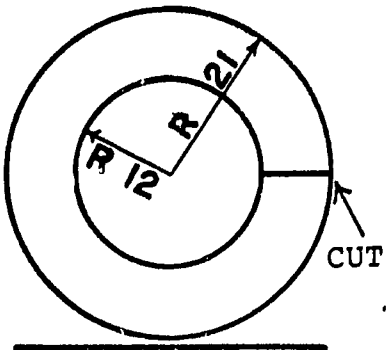

WEATHER COLLAR

SCALE 1:5

MATERIAL: 0.5mm GALVANIZED STEEL

B

FOLD

0

CUT

8

0.5mm

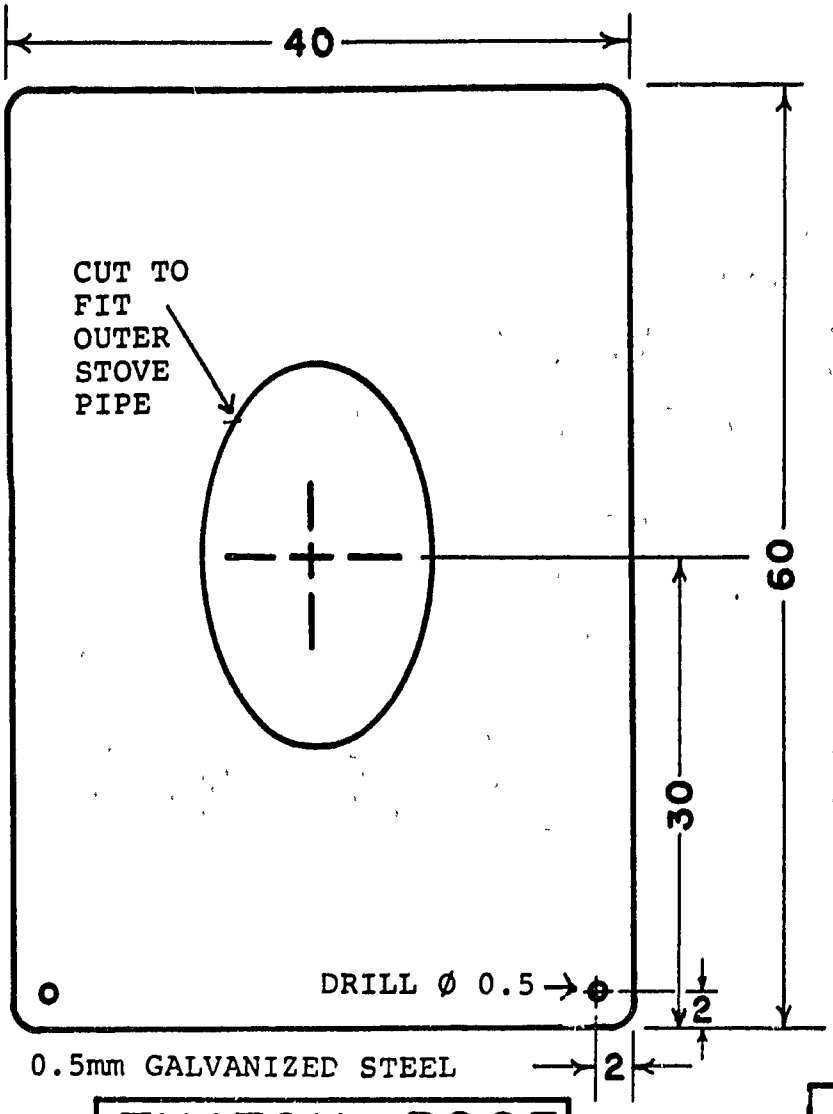

0.5mm GALVANIZED STEEL

THATCH ROOF FLASHING

SCALE 1 : 5

C

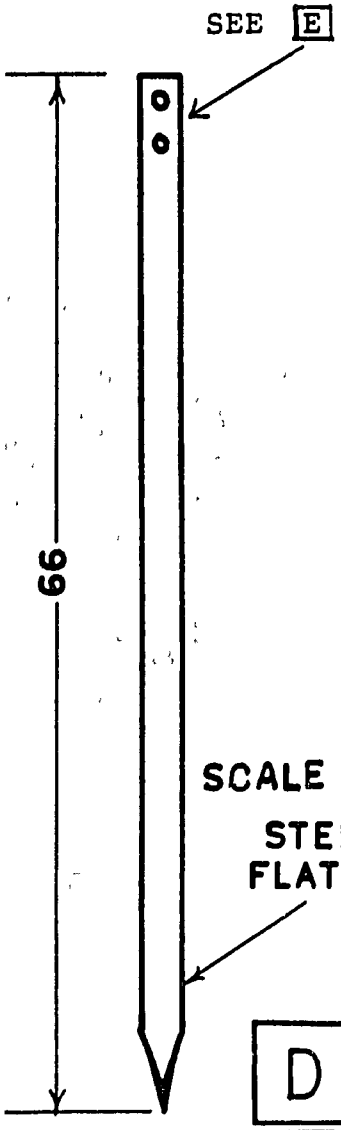

SCALE 1:5

STEEL FLAT BAR

D

GROUNDING STAKE

5x25mm STEEL FLAT BAR

120

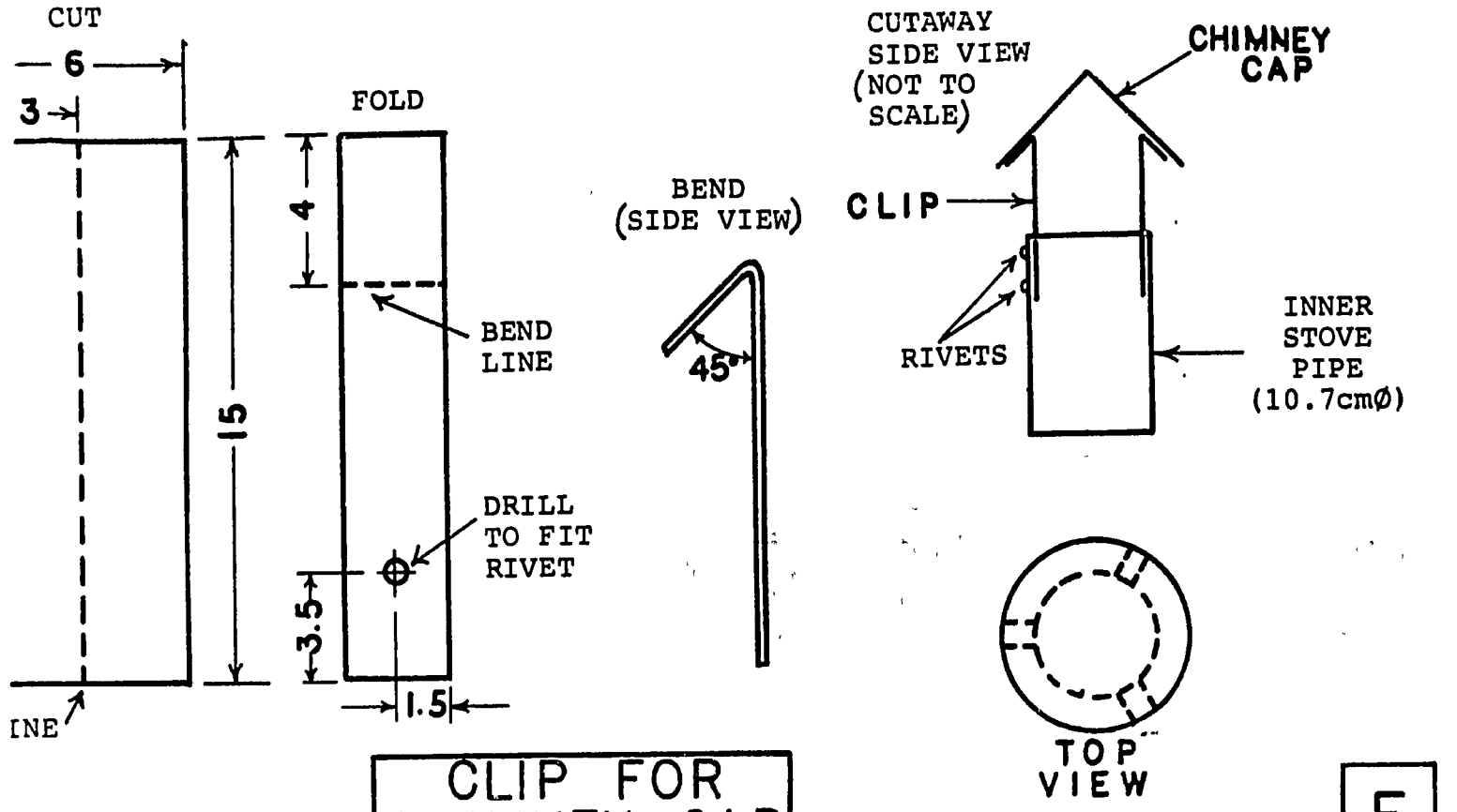

mm GALVANIZED STEEL

CLIP FOR CHIMNEY CAP

SCALE 1:2

F

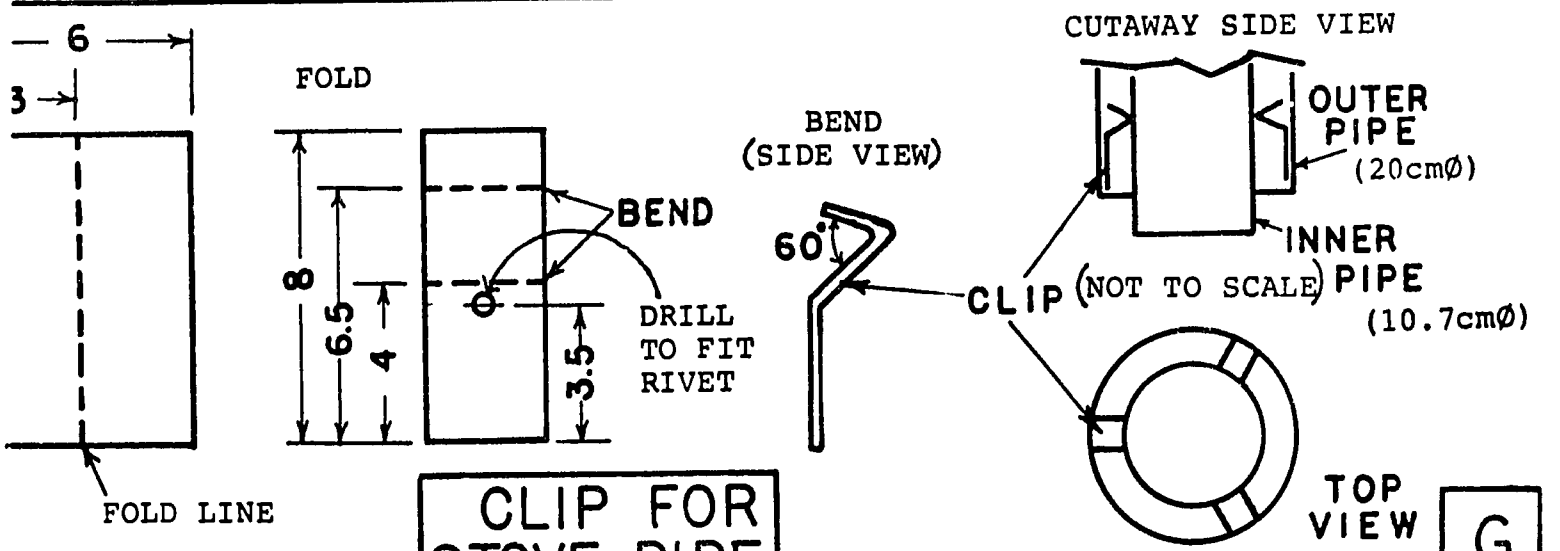

ALVANIZED STEEL

CLIP FOR STOVE PIPE

SCALE 1:2

G

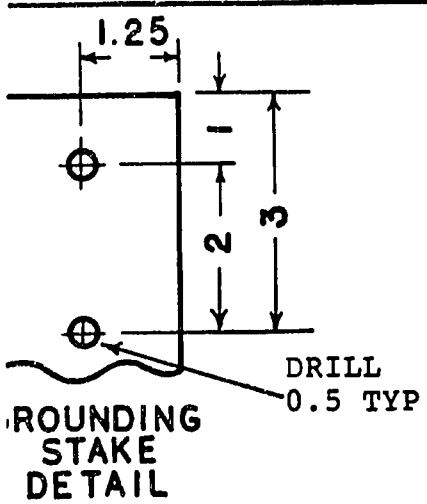

E

RET LESOTHO
RENEWABLE ENERGY TECHNOLOGY
RURAL DEVELOPMENT

RET-3 STOVE: CHIMNEY SYSTEM PARTS		
DRAWN BY: H. MITCHELL	DATE: 5/15/83	
SCALE: NOTED	UNITS: Cm	PAGE: 19
MATERIAL: 5 mm GALV. STEEL		
CHECKED BY:	DATE:	

EXPLODED VIEW

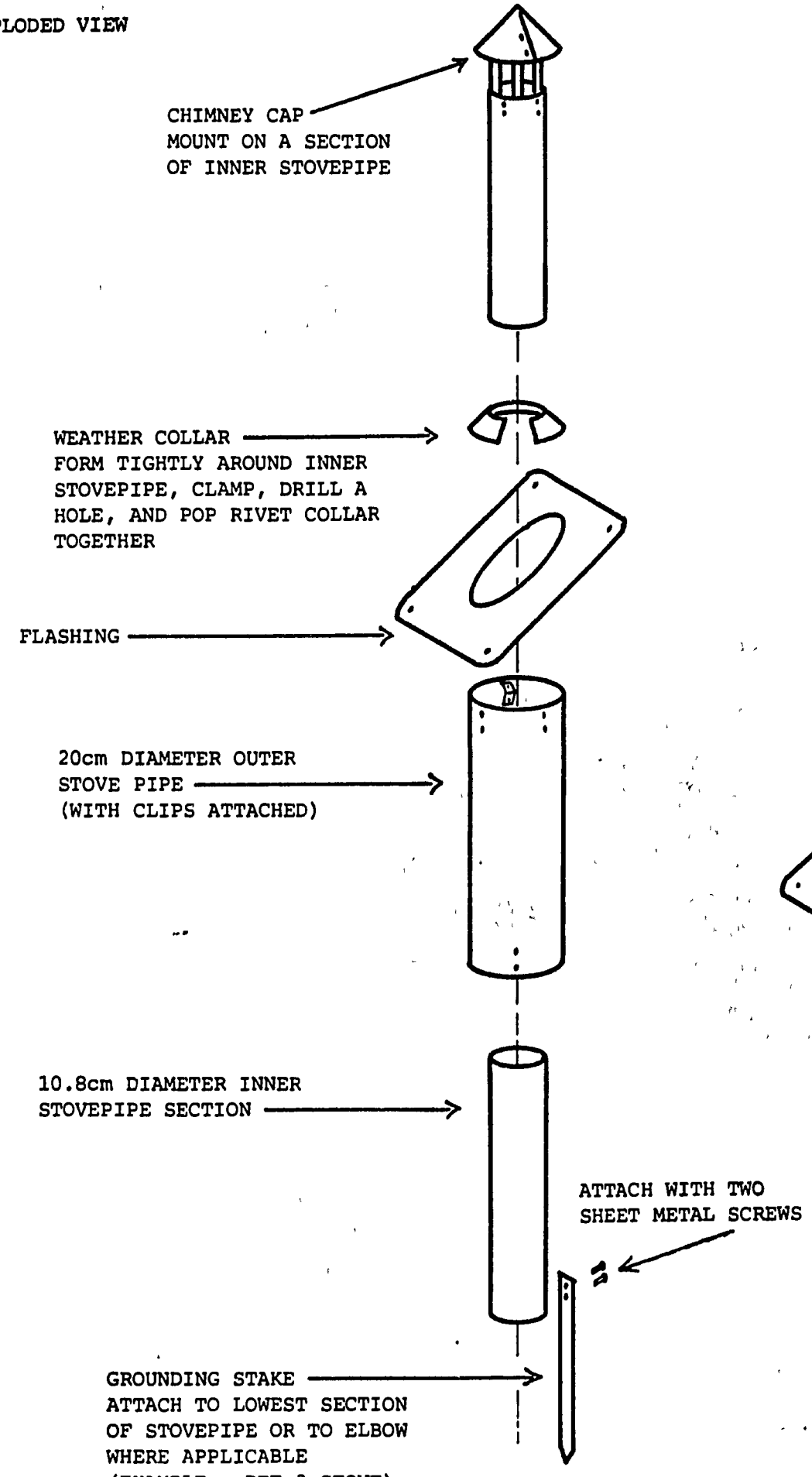

ASSEMBLED VIEW

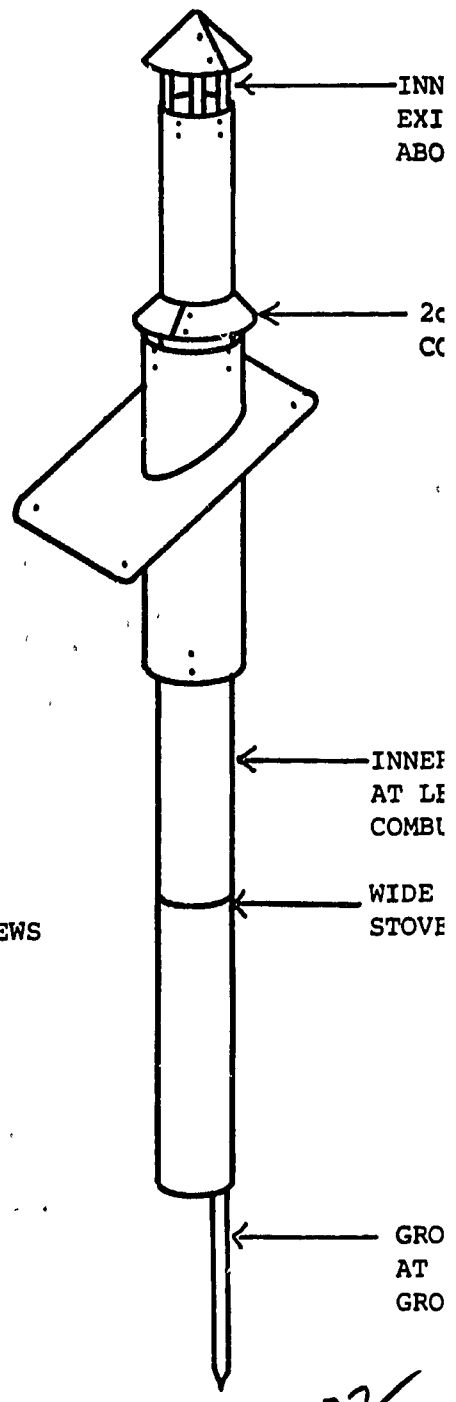

THATCH ROOF

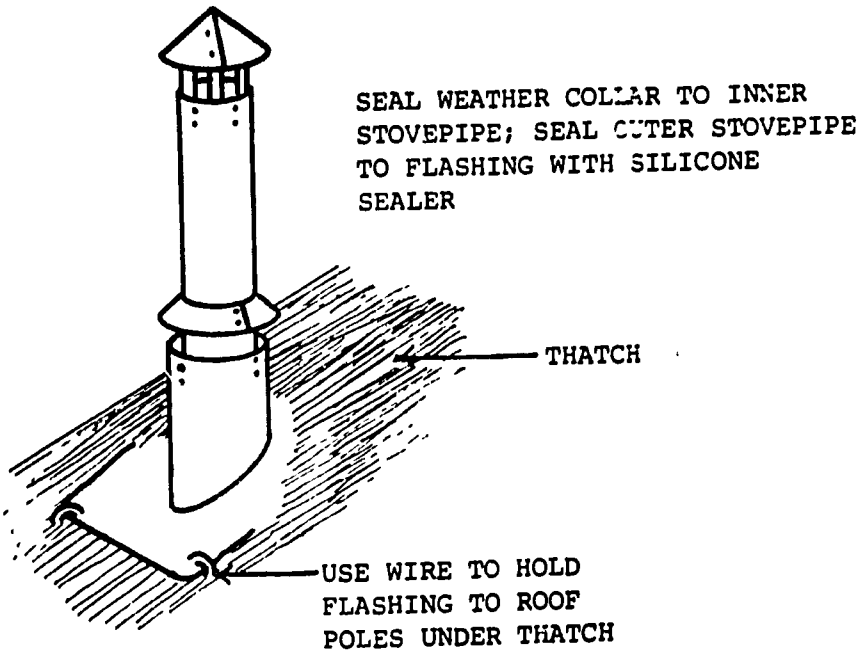

PIPE SHOULD
S THAN 60cm
OOF

METAL ROOF

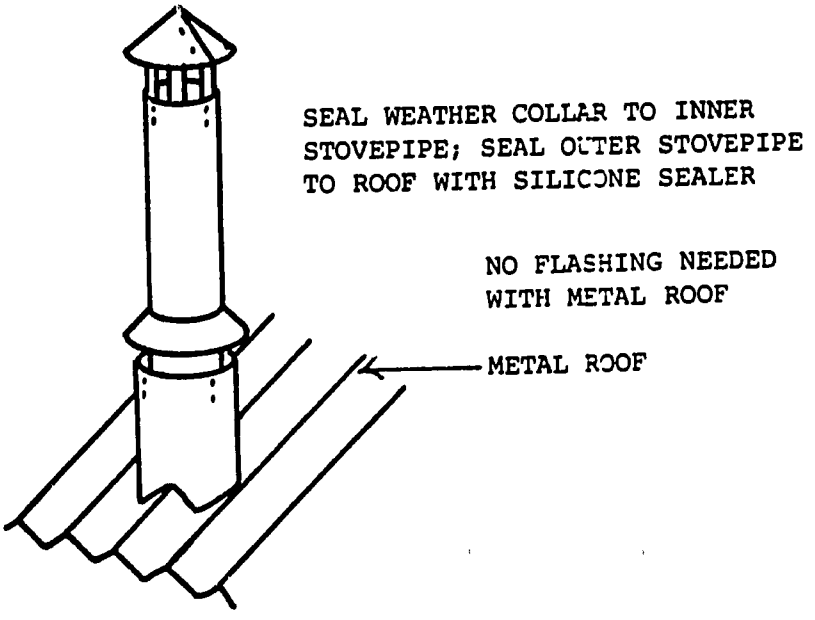

ETWEEN WEATHER
D OUTER STOVEPIPE

PIPE SHOULD BE
cm FROM
MATERIALS

INNER
HOULD FACE UP

STAKE SHOULD BE
20cm IN THE

RET LESOTHO
RENEWABLE ENERGY TECHNOLOGY
RURAL DEVELOPMENT

RET-3 STOVE: CHIMNEY ASSEMBLED		
DRAWN BY: H. MITCHELL	DATE: 5/15/83	
SCALE:	UNITS:	PAGE: 20
MATERIAL:		
CHECKED BY:	DATE:	

1.23

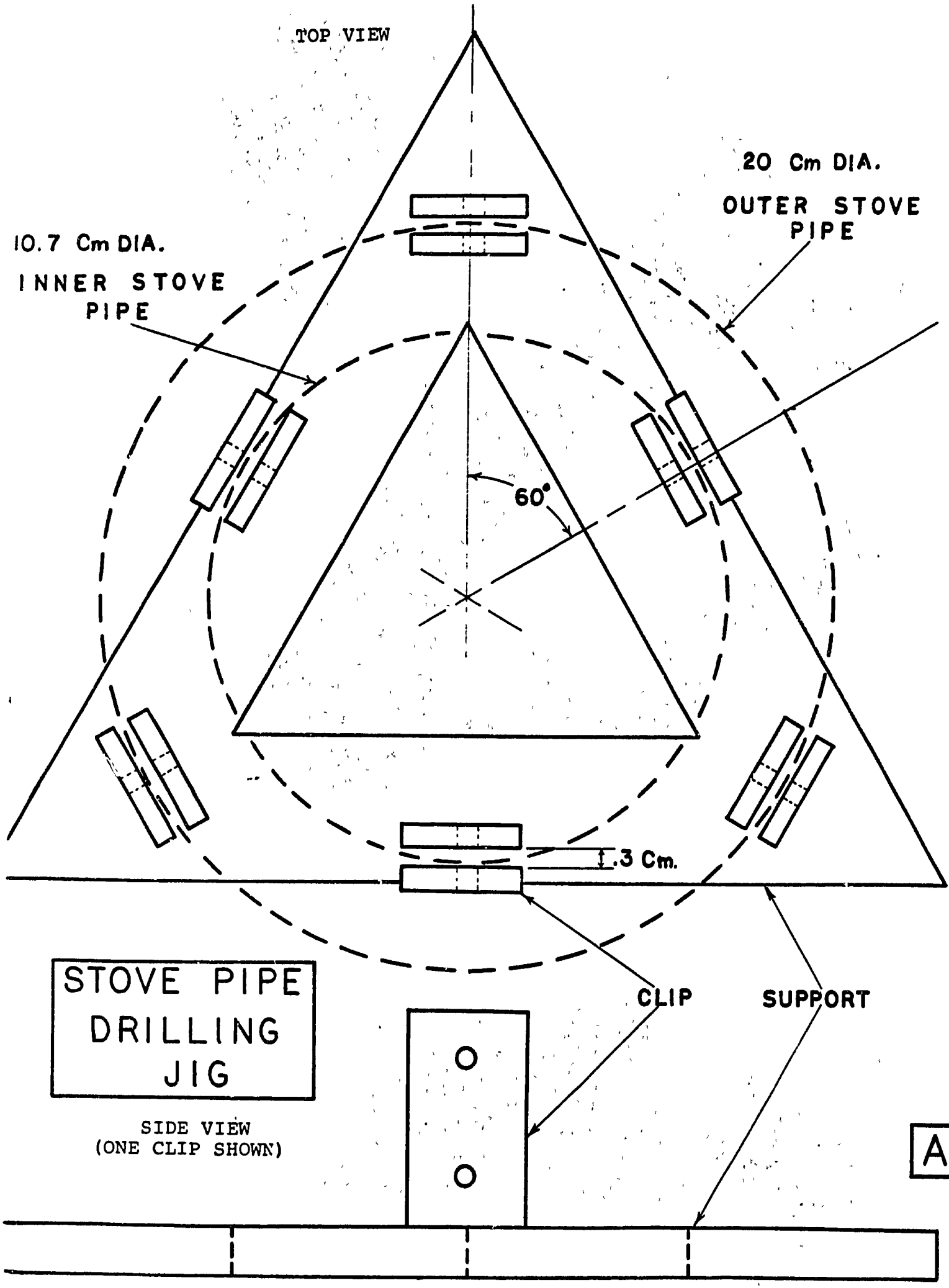
TOP VIEW
20 Cm DIA.
OUTER STOVE PIPE
10.7 Cm DIA.
INNER STOVE PIPE
60°
.3 Cm.
CLIP
SUPPORT
STOVE PIPE DRILLING JIG
SIDE VIEW
(ONE CLIP SHOWN)
A

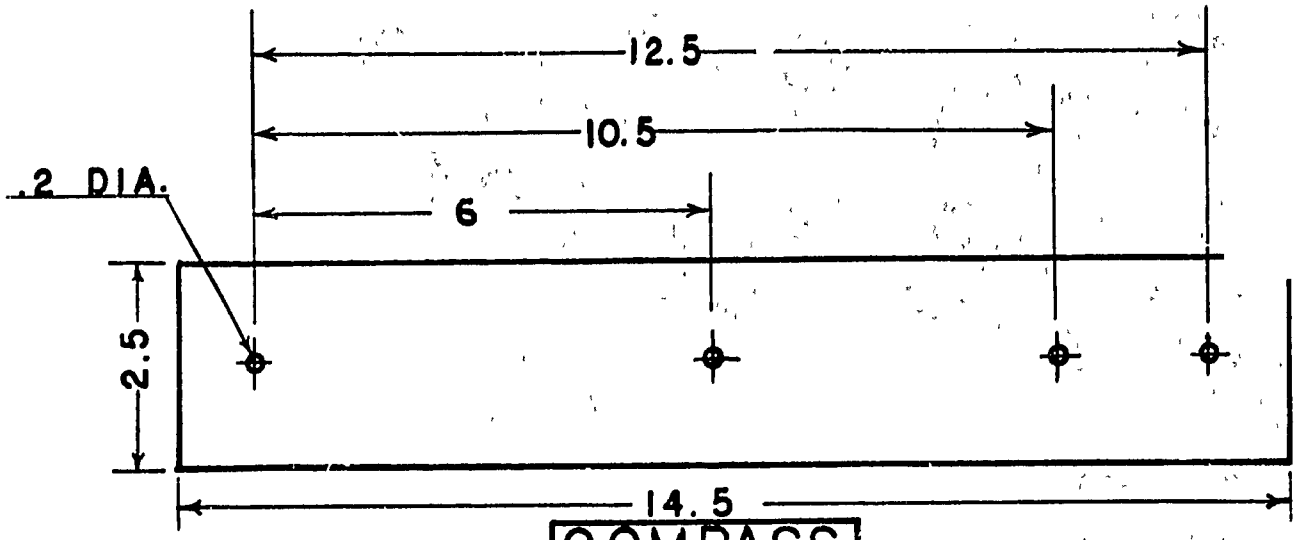

COMPASS

(WEATHER COLLAR AND CHIMNEY CAP PATTERN)

MATERIAL: 0.5mm GALVANIZED STEEL

B

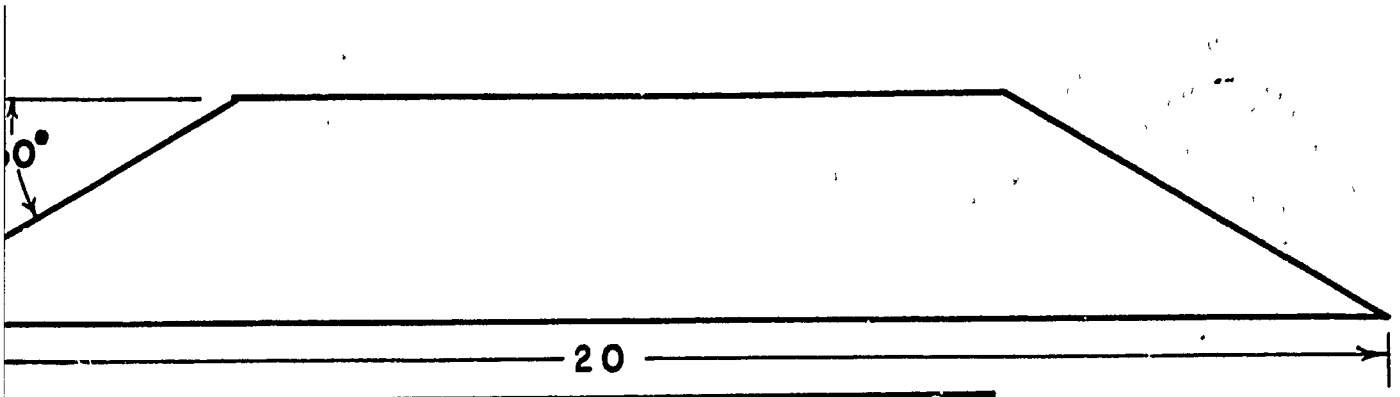

DRILLING JIG SUPPORT

(10 X 30 mm FLAT BAR)

3 REQUIRED

C

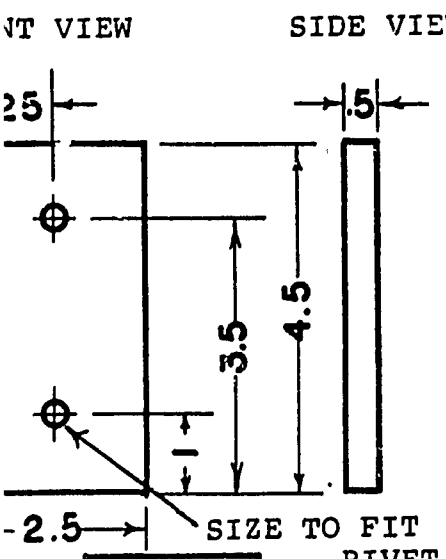

CLIP

X25 mm FLAT BAR)

12
REQUIRED

D

RET LESOTHO
RENEWABLE ENERGY TECHNOLOGY
RURAL DEVELOPMENT

RET-3 STOVE: CHIMNEY JIG/COMPASS		
DRAWN BY: H. MITCHELL	DATE: 5/5/83	
SCALE: FULL	UNITS: Cm, mm	PAGE: 21
MATERIAL: AS NOTED		
CHECKED BY:	DATE:	