36738 PNAAR-226

SUMMARY REPORT FOR 1981 - 1983 SOCIOECONOMIC AND NUTRITION RESEARCH CONCERNING SORGHUM PRODUCTION AND USE IN SOUTHERN HONDURAS

Eunice R. McCulloch and Mary Futrell

Project No. USAIDXII - MSU3: An Interdisciplinary Approach to Nutrition Improvement of People Consuming Grain Sorghum and Pearl Millet as the Staple Food.

Department of Sociology and Anthropology and
Department of Home Economics
Mississippi State University
Mississippi State, Mississippi

June, 1983

Introduction

Several years have been devoted to the collection and analysis of social, economic, and nutritional data relating to the production and use of grain sorghum in southern Honduras for the USAID CRSP International Sorghum-Millet Program (see Futrell, Bluhm, McCulloch, and Jones, n.d.; Dewalt, et. al, n.d.; Simpson, 1982; and McCulloch, 1983). Although much of the work done must be considered preliminary in nature and additional reports are forthcoming, a fairly comprehensive picture has emerged of the relevant economic and cultural variables of the small farmers in an area where grain sorghum is an important crop for human food. Researchers have been fortunate in selecting areas for study which vary somewhat both in physical evironment and in levels of resources and this has made it possible to assess a wide range of conditions and problems which relate to potential agricultural development.

The data collected in the summer of 1981 for the Mississippi State University project (USAID XII - MSU3) have been analyzed and the results reported (McCulloch, 1983). A summary of this report is presented here followed by a supplemental review of the 1983 field work findings.

Field research conducted by personnel from Mississippi State University has focused on the settlements of El Corpus, Guajiniquil, and Pavana, all within a short distance from the departmental capitol, the city of Choluteca (See map, Figure 1). In these settlements, the population of interest was that of the small subsistence farmers who

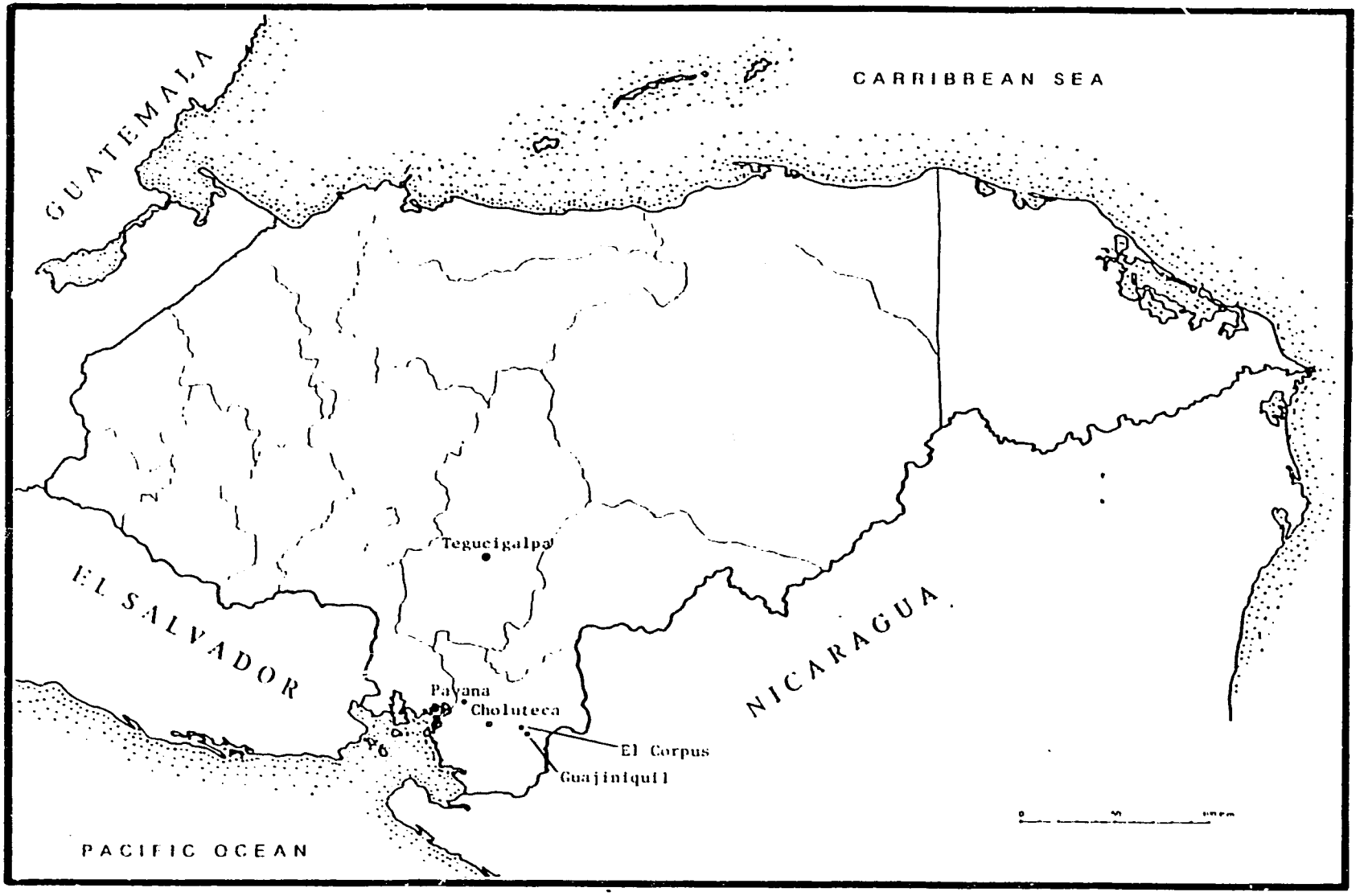

Figure 1. Map of Honduras

regularly grow sorghum each year as a food crop and where many of the families use sorghum in their own diets.

During the initial field study in the summer of 1981 efforts were made to collect information on a very broad range of social, cultural, nutritional, economic, and technological variables relating to sorghum production. The several methods of investigation consisted of the use of informants, participant observation and the administration of a questionnaire to certain members of 43 households.[1]

The population could fairly be described as subsistence farmers. Present were primitive levels of technology used to produce crops primarily for household consumption. Only small amounts of cash income from produce was realized, there being little or no surplus. Characteristic of many subsistence farmers are inadequate levels of nutrition and capital and land resources. In this area of southern Honduras such a population comprises a large segment of the population.

The people in the villages selected were of particular interest because of their adherence to traditional diets, the primitive systems of agriculture, and minimal land and economic resources. Both hillside and flat lowland farming systems were documented and these differed both in technology and cropping patterns.

During the initial phase of the study, it was possible to collect extensive information about food preferences and diets, food attitudes, nutritional status, farming methods and problems, land tenure patterns, work groups, crop yields, household size and

---

[1]A copy of the questionnaire used is found in McCulloch (1983), Appendix A.

composition, age distributions, infant and child mortality and, particularly, the role of sorghum in the agricultural and nutritional systems.

Descriptive Data

For the purposes of structuring the data collected in a way that focuses on the goal of food production, the relational diagram, Figure 2, was developed. The diagram can be viewed as a descriptive framework for the study of this particular population. It includes all those factors judged to be most relevant to nutritional status although, in some cases, it was not possible to obtain detailed information on all variables shown.

As indicated in the diagram by the dotted line, which represents environmental boundries, cultural norms and preferences form a part of the environment within which social and economic factors interact to provide nutrition.

Life Style.

The life style of these small farmers is characterized by a meagerness of material possession. The houses they occupy are built of adobe or of poles or boards with intersticed dried mud or of poles only. Roofs are usually of baked clay tiles, or less common, of thatch. The houses have earth floors, usually only one room and one or two small square windows. Kitchen areas are found on one wall of the house or in a separate lean-to structure. The main room is often divided into separate areas by a partition made of slats and cardboard which is often "papered" with pages of old magazines, newspapers or even grain sacks. Furniture is scarce. There are usually one or two wooden folding chairs; there may be a crudely

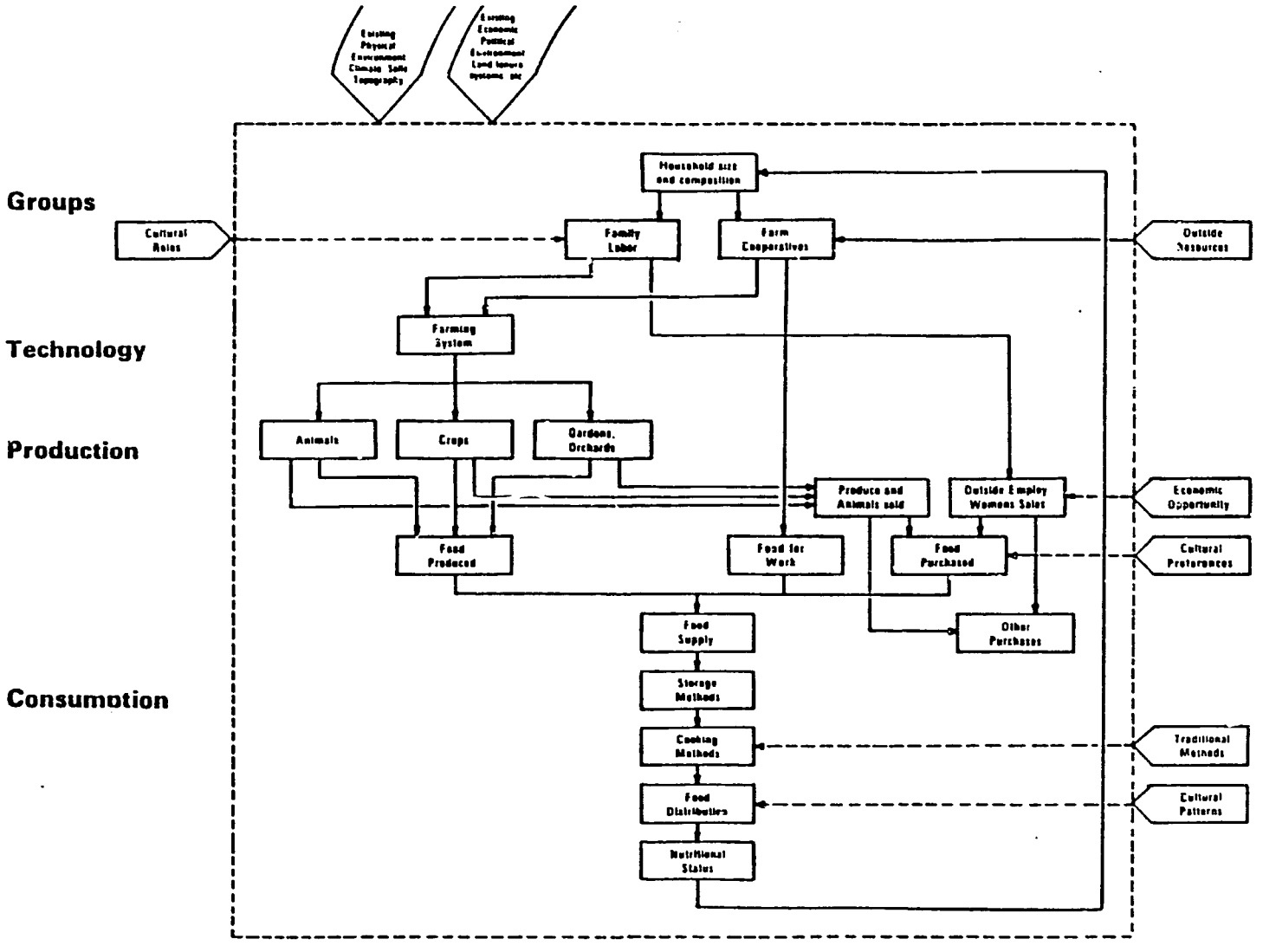

Figure 2. Relational Diagram of Nutrition System

built wooden table and a bench and a wooden bed with a twine platform on which straw mats are laid. Every house has one or two hammocks which are used for sleeping, resting during the day or lulling a fretful baby. Food is prepared at a roughly constructed work counter. A large tin or clay olla (pot) of water is at hand. Cooking utensils are few, consisting of one or two clay or aluminum pots, several plastic containers and baskets, a grinding stone and a clay or iron comal (a slightly rounded pan) for cooking tortillas on the raised hearth stove which was constructed of dried mud.

The predominant family grouping is the nuclear family, although it is common to find young single women with babies continuing to live with their parents and extended families are also quite common. Marital alliances are usually extra-legal; that is, few couples have had religious or civil ceremonies. Nevertheless, such alliances are fairly stable, the cooperation of both man and woman being essential for survival. For this society, the basic unit of production and consumption is the household.

Household Size.

The number of persons per household ranged from 3 to 13 persons with an average of 7 persons for the farming families (the mode was 5). In order to determine nutritional requirements, the mean frequences of the age-sex categories as used in FAO tables of recommended nutrient intake (FAO, 1973) were computed (Table 1). These figures were subsequently used in the evaluations of the farming practices with regard to supplying adequate nutrition.

Table 1. Age-Sex Composition of Average Household

Age Group	Number in Household[1]
Adult Male Head (avg. age = 43.2)	1
Adult Head Female (avg. age = 37.2)	1
< 1 Infants	.4
1-3 Children	.8
4-6 Children	.8
7-9 Children	.7
10-12 Male Adolescents	.3
13-15 Male Adolescents	.3
16-19 Male Adolescents	.3
≥ 20 Male, Other than Head	.4
10-12 Female Adolescents	.2
13-15 Female Adolescents	.2
16-19 Female Adolescents	.3
≥ 20 Female, Other than Head Female	.3
Total	7.0

[1]Rounded to the nearest tenth.

Sex Roles.

Farming is chiefly a male occupation. Women spend a great deal of time in food preparation activities. The making of tortillas, consumed daily by all families, requires the steeping of the grain (maize, sorghum, or a mixture of the two) in water to which lime or wood ashes have been added. After steeping, the mixture is usually allowed to stand until the next day, then thoroughly washed, and then ground either by a commercial mill, hand grinder, or by hand on a stone. Cooking the tortillas involves more grinding on a stone, hand shaping and cooking one-by-one, all time-consuming processes. Other duties are carrying water, washing clothes and caring for children. A substantial number of the women also engage in cooking or baking food for sale. Women are also responsible for the feeding and care of small animals such as chicken and pigs. Occasionally, they assist in farming work but this is not a regular activity.

Some men, in addition to farming, engage in seasonal work on large plantations or cattle ranches or do other types of labor. They also care for the larger animals such as calves, oxen or burros.

Farming Practices.

In the locations chosen, the farms were typically very small, the farmers having access to from .5 to 5 manzanas[1] (about .9 to 8.5 acres). In El Corpus and Pavana, cooperative farming enterprises assigned plots of from 1 to 2 manzanas to each household.[2]

---

[1] 1 manzana = 1.7 acres or .7 hectare.

[2] This was dependent on the size of the household.

Tools for hillside farming were machetes and planting sticks. A planting stick is a long pole with an iron or steel blade set into the end. Where the level terrain such as near Pavana permits the use of oxen, wooden steel-tipped plows carved from large pieces of timber are used for plowing, but machetes are used for the other tasks such as land clearing, cutting weeds, harvesting, etc.

In the areas of El Corpus and Guajiniquil where hillside cropping is practiced, the prevalent pattern is the intercropping of sorghum, maize, and beans. At Pavana, beans are usually not grown because the hotter climate and prevalence of insects makes this uneconomical. Here the intercropping of maize and sorghum is the most common practice.

Average annual yields for the crops produced as reported by the farmers for the previous harvests are shown in Table 2. This table gives the yields for each of the most common systems of farming; that is, the three-crop maize, sorghum and beans; the two-crop sorghum and maize and the sole crop of sorghum. There were single instances of maize and beans grown separately and these figures are also shown.

The figures given in the table permit a comparison between the values of the three-crop upland planting stick system and the two-crop lowland system using oxen and wooden plow. As shown by the table, the higher average yield of sorghum grown with maize is offset by the lower yields of the maize resulting in a lower value per manzana for the crops compared with that for the three-crop system. However, where the three crops are grown, the farmer typically has access to less land (an average of 1.1 manzanas) and thus produces the equivalent of a total of $462, whereas the farmer of the lowlands

Table 2. Annual Average Yields and Value of Products

Cropping System	Crop	Average Yield (lbs./mz.)	Cost per Pound if Purchased (U.S. $)	Value per Manzana (U.S. $)	Value per Manzana (1000 Calories)
Intercropping Maize, Sorghum and Beans	Sorghum	1800	.08	144	2802.6
	Maize (2 crops/year, both crops)	1300	.12	156	2101.8
(Average size of farm = 1.1 mz.)	Beans	240	.50	120	371.5
	Total value of products per manzana			420	5275.9
	Total value for average farm (1.1 mz.)			462	5803.5
Intercropping sorghum and maize	Sorghum	2260	.08	181	3518.8
	Maize (both crops)	1120	.12	134	1809.9
(Average size of farm = 1.8 mz.)	Total value of products per manzana			315	5328.7
	Total value for average farm			567	9591.7
Sorghum grown as sole crop		1860	.08	149	2896.0
(Average size of plot = 1.2 mz.)	Total for 1.2 mz.			179	3475.2

Table 2. (continued)

Cropping System	Crop	Average Yield (lbs./mz.)	Cost per Pound if Purchased (U.S. $)	Value per Manzana (U.S. $)	Value per Manzana (1000 Calories)
Beans grown as sole crop		324	.50	162	501.6
(Size of plot = .5 mz.)	Total for .5 mz.			81	250.8
Maize grown as sole crop		1340	.12	161	2165.4
(Size of plot = .5 mz.)	Total for .5 mz.			80	1082.7

using a plow normally has access to more land (an average of 1.8 manzanas) and thus is able to grow crops valued at $567 with less labor.

As the data given for the sole cropping of sorghum show, the practice of growing this crop by itself was not an economical practice. There were seven farmers who grew sorghum alone, five of these with planting stick, two with oxen. Plots ranged from .5 to 2.0 manzanas with an average of 1.2 mz. Only four of these farmers said that they ever sold any of this.

Only one instance of beans grown alone was recorded. This plot was one-half manzana in size and yielded 162 pounds (value = $81.00). There was also only one instance of maize being grown alone with a yield of 670 pounds for one-half manzana (worth $80.40).

Clearly, intercropping is preferred and with present levels of technology yield a much higher return both in terms of monetary value and subsistence. The yield values given in Table 2 were used in evaluations which are discussed below.

Other Food Sources.

A few families had small plots of field peas near their homes and some had a few fruit trees. One of the cooperatives had a small plot of yuca (cassava) and a number of cashew trees. The small amounts of such produce, both individually and cooperatively grown, were insufficient to supplement the diets in an appreciable way.

Most of the households kept a few chickens and a pig or two. The major contribution to the regular diets were eggs. Chickens were

eaten only when there were important guests or, occasionally, by someone who was ill. Pigs were raised chiefly to be sold when money was needed for emergencies. All of the families contacted said that they did not eat the pigs they raised. None of these families owned milk cows, although some larger farmers in the area maintained herds.

Hunting and fishing activities did not contribute regularly or substantially to the food supply.

Diets

Staple items in the diets of these farmers are tortillas and beans. Tortillas are made from either maize, sorghum, or a mixture of the two. The 1981 field research took place during the planting season when the food supply was at its lowest; maize supplies were exhausted and many households were dependent on small remaining stores of sorghum. The daily diets which were documented reflect this deprivation. These diets were qualitatively grouped into five types, Table 3. On first observation, all of these diets would seem to be nutritionally poor.

Table 3. Daily Diets During Season of Food Shortage

Type	Food Items	% of Persons Subsisting On This Type of Diet
1	Tortillas Only (Generally Eaten with Salt)	7.5
2	Tortillas and Beans	50.9
3	Tortillas, Beans and Rice	17.0

Table 3 (continued)

Type	Food Type	% of Persons Subsisting On This Type of Diet
4	Tortillas, Beans, Rice Plus Some Eggs, Cheese, Milk, or Small Amount of Meat	20.8
5	Tortillas, Beans, Rice Plus Small Amount of Fresh Vegetables Such As Tomatoes or Cabbage	3.8

Those households who were receiving supplemental food rations (food for work programs) did not have substantially better diets than those who did not. More were eating maize tortillas or mixed maize and sorghum, however. This was due to the fact that maize rather than sorghum was the cereal being supplied for work.

Other Data.

For information concerning food preferences and beliefs, rates of infant and child mortality and prenatal deaths, attitudinal variables, and more complete descriptions of data presented, see McCulloch (1983).

Nutrition Evaluation

A number of evaluations were made of cropping systems and diets and a review of the results will be presented. Linear programming methods were used in these determinations.[1]

Using values calculated for the household composition (Table 1) and the FAO tables of recommended nutrient intakes (FAO, 1973), the desired levels of intakes were calculated for the average family. These figures are shown in Table 4.

First, the most nutritionally effective farming activity was assessed by entering the nutritional requirements as restraints and entering each crop as a separate activity. The objective function was defined as the least cost of land necessary to produce the required nutrients. Calorie and nutrient values for cereals, beans, and other foods were calculated from those given in FAO tables (1954).

It was obvious from the yield values that the cropping system with the highest yield of a particular crop would provide the most efficient source of nutrients should that crop enter the solution. Table 5 summarizes the L.P. solution. The solution demonstrates clearly that additional foods are necessary to meet nutrition requirements since the 12.6 pounds of sorghum and the 13.1 pounds of dried beans, the activities that resulted, exceed the amounts that could be consumed daily.

---

[1]The computer program used was the Functional Mathematical Program System (FMPS) for the Sperry Univac 1100 Series.

Table 4. Recommended Daily Intakes of Nutrients for Average Family*

Age Group	No.	Energy** (kilo-calories)	Protein (gr.)	Vitamin A (micrograms)	Thiamin (milligrams)
< 1 Infants	.4	436	5.6	120	.12
1-3 Children	.8	1088	12.8	200	.40
4-6 Children	.8	1464	16.0	240	.56
7-9 Children	.7	1533	17.5	280	.63
10-12 Males	.3	780	9.0	173	.30
13-15 Males	.3	711	11.1	218	.36
16-19 Males	.3	747	11.4	225	.36
≥ 20 Males	.4	976	14.8	300	.48
10-12 Females	.2	470	5.8	115	.18
13-15 Females	.2	416	6.2	145	.20
16-19 Females	.3	580	9.0	225	.27
≥ 20 Females	.3	552	8.7	225	.27
43.2 Adult Male	1	2318	37.0	750	1.20
37.2 Adult Female	1	1840	29.0	750	.90
Total Persons	7				
Total Daily		13,911	193.9	3965	6.23
Total Yearly		5,077,515	70,774	1,447,225	2274

*Computed from Tables, FAO/WHO report, Energy and Protein Requirements, 1973, Rome.

**Ibid., Energy requirements those for people from developing countries (average weight, adult male = 53 kg., adult female = 46 kg.)

Table 4. (continued)

Age Group	Riboflavin (milligrams)	Niacin (milligrams)	Ascorbic Acid (milligrams)	Calcium (gr.)	Iron*** (milligrams)
< 1 Infants	.20	2.16	8	.20	4.0
1-3 Children	.64	7.20	16	.32	8.0
4-6 Children	.88	9.68	16	.32	8.0
7-9 Children	.91	10.15	14	.28	7.0
10-12 Males	.48	5.16	6	.18	3.0
13-15 Males	.51	5.73	9	.18	5.4
16-19 Males	.54	6.09	9	.15	2.7
≥ 20 Males	.72	7.92	12	.16	3.6
10-12 Females	.28	3.10	4	.12	2.0
13-15 Females	.30	3.28	6	.12	4.8
16-19 Females	.42	4.56	9	.15	8.4
≥ 20 Females	.39	4.35	9	.12	8.4
43.2 Adult Male	1.80	19.80	30	.40	9.0
37.2 Adult Female	1.30	14.50	30	.40	28.0
Total Persons					
Total Daily	9.37	103.68	178	3.10	102.3
Total Yearly	3420	37,843	64,970	1132	37,339

***Requirements those given for diets based on non-animal foods.

Table 5. Optimum Land Use for Supplying Nutrients

Combination of Cropping Activities	Land Needed (mzs.)	Amount Needed for Complete Nutrition (lbs.) Yearly	Daily
Sorghum (at 2-crop intercropping yields)	2.1	4,597	12.6
Beans (at sole crop yields)	14.8	4,770	13.1

Nutrient	Percentage of Requirements Supplied
Calories	286
Protein	974
Vitamin A	100 (limiting)
Thiamin	890
Riboflavin	205
Niacin	341
Ascorbic Acid	100 (limiting)
Calcium	309
Iron	623

Other L.P. models were subsequently tested with the limited nutrients, Vitamin A, ascorbic acid, riboflavin and calcium allowed to enter the program as nonrestrictive. The most interesting finding was that the intercropping of beans, maize, and sorghum produced just enough calories to meet the energy requirement of the average family on the average size plot of 1.1 manzanas. Although Vitamin A, ascorbic acid, riboflavin, and calcium[1] are deficient, protein and other nutrients are present in sufficient or excess amounts. Because maize is generally preferred to sorghum in the making of tortillas and beans are usually refried, maize, oil and beans were forced into the solution at modest levels. It was reasoned that the average amounts of maize produced per year, 1,430 pounds, the average yield of beans (somewhat less than 3/4 pounds per day) and 50 pounds of oil were reasonable minimum amounts. The solution produced results which nearly coincide with information documented in the field. Cereal consumption is at 7.7 pounds per day (8 pounds was given by informants). A summary of the solution for this model is shown in Table 6.

The various types of diets as given in Table 3 were evaluated by similar methods. The addition of rice (Diet 3) was not beneficial and raised the cost of the yearly diet by $30.61. Diet 4 was also more expensive when the program was run with eggs and cheese (the most common items) and did not correct the dietary deficiencies appreciably.

---

[1]Calcium would probably not be deficient where lime is used to prepare tortillas. Some of the families, however, used wood ashes.

Table 6. Subsistence Activities and Nutritional Adequacy

Activities	Pounds Produced or Bought		Land Used (mz.)	Monetary Value ($)
Intercropping of:				
Sorghum	1,386		.76	110.84
Maize	1,430		1.09	171.60
Beans	264		1.10	132.00
Oil (purchased)	50		0	31.50
		Total	1.10*	445.94

Nutrient	Percentage of Needs Met
Calories	100 (Limiting)
Protein	214
Vitamin A	31 (Deficient)
Thiamin	270
Riboflavin	54 (Deficient)
Niacin	107
Ascorbic Acid	5 (Deficient)
Calcium	33 (Deficient)
Iron	132
Histidine	403
Isoleucine	318
Leucine	627
Lycine	158
Methionine plus cystine	226
Phenylalanine plus tyrosine	569
Threonine	276
Tryptophan	118
Valine	363

*Intercropping total

Finally, a model incorporating the most common food items was tested. These foods were a combination of those that could reasonably be expected to furnish a balanced diet at the lowest possible cost. All nutrient requirements were entered as restraints. It was necessary to limit maize and sorghum to maximum levels of a total of 2,920 pounds, or 8 pounds of cereal per day, and beans to 264 pounds. Other items, oil, rice, eggs, cheese, and oil were forced into the solution at minimum levels to give consideration to cultural practices. Several successive runs were necessary to establish reasonable levels for various foods. As each food present in the solution entered, it was often at unreasonably high levels and it was necessary to add a maximum restraint level for that food.

The final optimum low-cost solution is summarized in Table 7. This table shows the foods selected, the percentage of each nutrient provided by that food, and its cost. It should be noted that the levels of eggs and powdered milk that entered the solution may appear higher than might be practical for this population. However, food items that entered the solution were selected on the criteria of most economic sources so that the 147 pounds of eggs (approximately 2.3 dozen per week) and the 187 pounds of powdered milk (roughly equivalent to 1.9 quarts of liquid milk daily) represent inexpensive sources of nutrition in comparison with other food items. Foods which were included in the model but which dropped out were fresh milk, chicken, potatoes, yucca, wheat flour, and pork. The total cost of the yearly diet (objective function) is $1,165.54.[1] This is

---

[1]The cost of coffee and sugar would need to be added to this amount since all families drank coffee each day, usually sweetened.

Table 7. Foods and Their Contribution to the Low Cost Diet

Food Item	Amount (lbs.)	Percentage of Nutrient Supplied									Cost ($)
		Calories	Protein	Vitamin A	Thiamin	Riboflavin	Niacin	Ascorbic Acid	Calcium	Iron	
Sorghum	1490	45.7	96.6	28.1	121.8	29.6	71.5	0	15.8	77.2	119.20
Maize	1430	45.5	87.1	0	128.3	20.5	34.4	0	4.2	40.8	171.60
Beans	264	8.0	37.4	.8	28.5	6.3	6.7	5.6	14.7	22.5	132.00
Oil	50	3.9	0	0	0	0	0	0	0	0	31.50
Rice	100	3.2	4.3	0	1.6	.4	1.9	0	.4	1.3	39.00
Eggs	147	2.1	11.6	16.4	3.0	5.8	.2	0	3.1	.4	121.99
Cheese	26	.7	3.0	2.5	.3	1.6	.1	0	.3	.3	39.00
Tomatoes	156	.3	1.1	9.9	1.9	.8	1.0	25.0	.7	1.3	42.12
Cabbage	63	.1	.4	.4	.5	.3	.2	15.5	1.0	.3	12.55
Plantains	150	1.0	.8	3.2	1.2	.6	.7	11.6	.3	1.0	22.50
Bananas	150	.9	.9	2.2	.9	.8	.9	5.4	.4	.8	10.50
Powdered Milk	187	8.2	31.2	19.5	9.0	32.5	1.7	5.3	67.7	1.7	400.98
Mangoes	150	.5	.4	16.8	.9	.8	.7	31.5	.4	.4	22.50
Total percentage of amount recommended		120.1	274.8	100*	297.6	100*	120.0	100*	109.0	148.0	T = 1165.44

*Limiting nutrient

$703.54 more than the value of the products grown (see Table 2) and this amount of additional money would have to be earned for household food intakes to be at the recommended levels of nutrition. Another feasible alternative solution is the growing of kitchen vegetable gardens on a regular basis. The kinds and amounts of vegetables most appropriate will be discussed below.

Several other considerations should be noted. A few of the families had mango trees and banana trees near their homes, and a few were growing small plots of field peas or yucca. There did not appear to be sufficient activity of this sort to add substantially to the diet for most households, but these practices could be increased. Also, not taken into consideration is the practice, quite common, of selling the subsistence crops to traders immediately after harvest. When this occurs, the farmer receives less than the market value for produce that he must buy back later at the retail price. Nor are the cultural patterns of food distribution considered. During the field study, it was documented that there was some bias against giving certain protein and vegetable foods to young children, practices which will certainly affect their nutritional status. In addition, the special dietary needs of nursing mothers, and the nutrition received by nursing babies were not considered in the models.

Summary of 1983 Field Research

The initial field work of 1981 took place just after the first[1] planting season.[2] The second trip for sociological research which took place in February and March of 1983 was timed to gather information concerning dry season activities and diets. It was known that the areas previously visited had experienced an almost total failure of the maize crop and that sorghum yields had been very low.

In addition to the researchers who collected social, economic, and dietary information, the research team included members who conducted studies on nutritional status and health of children by physical measurements and the collection of blood and hair samples. Fecal samples were also collected and examined for parasites. The results of this research will be reported separately.

To aid in the collection of the socioeconomic and dietary information, a short questionnaire was constructed (Appendix A). Several areas of inquiry were of particular interest: which work activities were of major economic importance during the season when little farming is done; what effect did the crop failure have on work activities and diets; and what foods constituted the typical diets at this time.

---

[1] A second annual crop of maize (and sometimes beans) is usually planted in September.

[2] Some sorghum was still being replanted.

Two of the same village areas, El Corpus and Pavana, were visited at this time. Guajiniquil was not revisited but several days were spent in new areas, the villages of La Laguna, Tierra Blanca and Goascoran. La Laguna is a settlement in the hills about 2.5 miles to the northwest of Pespire; Tierra Blanca, about 6.3 miles southeast of Choluteca; and Goascoran, on the Salvadoran border about 44 miles northwest of Choluteca. Observations concerning these areas are discussed below.

Although it was not possible to contact the same families as those previously visited in the villages of El Corpus and Pavana, the households visited conformed to the same general life style of those of the earlier study. For the 23 households contacted during this trip, the number of persons per household ranged from 1 to 9 persons with an average of 5.3 persons. (The mode was 5 as in the previous study.) As before, the male head of each household was considerably older than his spouse. Again, there were high rates of child mortality with 45% of the women reporting such losses (an average of .9 child per woman).[1] Miscarriages were also high with 40% reporting prenatal losses (an average of .6 per woman).[2]

Economic Activities

This was the dry season when little farming was done. A great deal of construction activities were engaged in at this time. We

---

[1]The earlier group of farming women had 64.3% women who had lost children, with an average of 1.3 children per woman (McCulloch, 1983).

[2]Earlier, 28.6% of the women reported miscarriages, with an average of .3 per woman for the group. (ibid).

observed the building of several houses, an outdoor oven, a pila (water tank) and other structures.

A broader picture of economic activities was obtained since households were visited without regard to their dependence on farming activities. Of the households contacted, 59% of the male heads were farmers, 22% day laborers, and 20% had occupations such as bus driver, welder, or preacher. Most of those who did not rely on farming as their main livelihood also had access to plots of land which they farmed in addition to other work. The amount of land ranged from 1/2 to 5 manzanas, with one household having 1/2 mz. and two having 5 mzs. Most of the households had 1 mz. (38%) or 2 mz. (23%). Of these, 9 farmers rented land and 4 belonged to cooperatives. Only 3 owned their own land.

There were quite a few of the women (27%) who made and sold food (tortillas, rosquites, and bread) for extra money.

Approximately one-half (52%) of those contacted owned a few chickens and one or two pigs. Thirty percent were raising animals to sell; these were pigs and, in a few cases, a few calves. Sorghum was used to feed the animals in 61% of the households who had animals. The remainder were feeding maize.

All of the persons contacted stated that they would like to have a garden but only 1 family reported having one. This included yucca, bananas, and cane. Most felt that it was not possible to have gardens without additional resources. Most frequently mentioned was a need for land or water followed by a need for seed and/or fertilizer.

Orchards were quite common with 61% having some fruit trees. Of these, 22% were strictly for family use, 22% were for family use with a little to sell, and 17% were orchards of considerable size with produce for sale although half of these reported little or no yield.

Diets.

Diets reported were very similar to those documented during the initial visit, 1981. The daily diets ranged from eating only tortillas and beans to one which included rice, eggs, some meat, a little cheese. No one reported eating any vegetables and only one person mentioned eating a little fruit. Vegetables were known to be available because a salad of tomatoes and raw cabbage accompanied each meal purchased locally by the researchers. These items were generally too expensive to be eaten regularly by the respondents.

Even though diets were generally the same as during the previous research, more families were eating maize tortillas: 74% as compared with the 26.6% previously noted; 13% were eating sorghum tortillas, earlier it was 49.6%; and 13% were eating mixed maize and sorghum or both, previously 23.8%.

However, as has already been mentioned, there had been a severe drought and the maize crop was completely destroyed. The sorghum crop was severely affected but some was harvested. The families eating maize were buying it or receiving it under the food for work program. It is important to note that several of the mothers who brought children to the health center stated that their families were living on diets consisting only of sorghum tortillas and salt.

If droughts continue in this area, the introduction of drought-resistant and higher-yielding varieties of grain sorghum may assume the greatest importance in the survival of these farming families.

Infant Feeding.

Respondents were asked at what age tortillas were first given to infants. In a few cases, ages as young as 2-3 months were given. Most persons gave 12 months as the appropriate age although several said that 1 1/2 to 2 years was the best age.

There was, however, considerable prejudice concerning sorghum tortillas. A little more than half expressed a decided bias against feeding sorghum tortillas to infants. Maize was considered a better food. Some of the reasons given were:

1. Maize is the custom.
2. Sorghum is for animals.
3. Maize tortillas are more nutritious than sorghum.
4. Sorghum tortillas are black.
5. Sorghum hurts the stomach.
6. Maize tortillas are better.
7. Prefer maize, but we are poor.
8. Maize is better for the stomach.
9. Maize tortillas are more filling.
10. (Babies) don't like sorghum tortillas.

Food Preparation.

The question concerning the use of ashes in making tortillas (see Questionnaire, Appendix A) was of interest because there are indications that such practices may be somewhat harmful.[1] Most of the women used lime but some (9%) used ashes. Some (27%) used a mixture or used both. Some negative views were expressed regarding the use of ashes: Ashes were felt to make tortillas ugly; lime makes tortillas whiter and peels better; ashes make tortillas black; and the stomach feels "blown up" when ashes are used. On the other hand, one women preferred ashes; she felt that the grain was "tastier".

Further investigations comparing the nutritive value of sorghum tortillas made with lime and made with ashes are under way at Mississippi State University. Studies concerning the possible detrimental effects of the use of ashes should also be made by appropriate research personnel.

Beans.

The method of cooking beans is important in an assessment of nutritional status because they contain a trypsin inhibitor. If beans are not sufficiently cooked at high temperatures, this factor will block proper protein utilization.

Most women fixed regularly prepared 1 pound of red beans daily

---

[1]Attention has recently been drawn to high rates of stomach cancer in Costa Rica where people commonly use ashes in the making of tortillas. (Personal communication, University of Mississippi Medical School personnel to Mary Futrell.)

for their households. The beans were called "rojo" or "chili" beans. Almost none of the women soaked the beans before cooking. They were washed and then cooked. Cooking time varied from 30 minutes to 3 hours for different women. Most of the women (82%) cooked the beans 1 1/2 hours or less. If the beans were very hard, all said that they cooked them all day. It is felt that because firewood is not plentiful, most women cook the beans for the shortest time possible. Further experiments concerning these practices and the nutritive value of the beans are also needed.

Other Areas Visited.

Visits to the three additional sites, La Laguna, Tierra Blanca, and Goascaron, resulted in a broader understanding of farming practices in Southern Honduras. Earlier impressions that the successful introduction of improved varieties of sorghum will depend upon taking into consideration the great number of microenvironments in which crops are grown were reinforced. In some areas such as La Laguna and Goascaron there is a greater dependence upon livestock than in the areas of El Corpus and Pavana. The hills around La Laguna appear less fertile and there are more rocks. It is felt that one of the first priorities for future research should be an adequate mapping of the soils in the areas where new sorghum varieties are to be introduced.

Farmers in the Tierra Blanca area were sorghum growers. They had harvested sorghum and families were using sorghum for tortillas. Many of the families did not have beans or other foods to eat with

the sorghum tortillas. This would be an area that would be receptive to the new tortillera variety.

Discussion

Although there is a need for more research and continuing longitudinal field observations, the data collected up to date makes possible a cogent description of many typical social and economic traits of these subsistence farmers. It appears that the households are composed predominantly of nuclear families, which often have other relatives living with them. Second generation extended families are less common, because the small farms are probably not able to support the larger groups. The average household size is relatively large, seven persons; the farm man-labor units average 1.6 for that size household. Consequently, labor is probably not a limiting factor of farm production. There is a homogeneity of culture which characterized by poverty; material possessions are meager. Most families live in adobe or mud and pole one-room houses with earthen floors and tile roofs. There is little furniture, clothing, or cooking and eating equipment. Small cash incomes are obtained by petty commercial activity and seasonal wage labor. Women make and sell food itmes and, to a lesser extent, hand-crafted goods. In addition, most households raise several pigs to sell, sometimes a few calves.

Behavior is traditional but not oppressively so. Women are chiefly concerned with cooking, which includes the time-consuming preparation of tortillas, carrying water (often from springs and streams), laundering clothes, usually in nearby streams, caring for children and raising chickens and pigs. Women also occasionally

help in the fields but this is not considered a part of their regular duties. Men are chiefly engaged in the field work of farming. They also carry firewood and take care of the larger animals such as cows, oxen, and donkeys. Children begin to help with adult tasks when they are about 12 years old. Girls contribute by helping with the cooking, boys by performing minor field tasks such as cutting weeds. Smaller children help care for babies and very young children and run errands. Whenever the family can afford it, the children go to school, but the lack of proper clothing may keep some from attending.

There does not appear to be a strong feeling of in-group solidarity since external influences have considerable influence. Communication (radio broadcasts), readily available bus service to the provincial capital of Choluteca, seasonal wage work for men, and women's market activities bring people into contact with a more modern world.

The chief source of livelihood is the production of maize, sorghum and beans in the upland areas of El Corpus and Guajiniquil and of maize and sorghum in the lowlands of Pavana. Each household relies on the production from small plots of land whether the farmer belongs to a cooperative or not. The average size of these plots is 1.1 manzanas (1.9 acres) in the uplands and 1.8 manzanas (3 acres) in the lowlands. In both the mountainous and the plains, the farmers use traditional primitive methods. The flat terrain of the lowlands permits the use of oxen for plowing, and it is possible to plant larger fields cooperatively.

Cropping Activities and Diet.

It was found that during and immediately following the planting season, and after a year of crop failure the diets of most persons are, on the average, deficient in several nutrients. Vitamin A, riboflavin, and ascorbic acid are typically lacking. The intake of calcium, also, is inadequate for those households that use wood ashes instead of lime in the preparation of tortillas. The subsistence activities which furnish the staples, i.e., maize, sorghum, and beans, can supply enough calories, protein, and many essential nutrients if eaten in reasonable amounts. The traditional diet of tortillas, beans, and rice does not supply the levels of all essential nutrients that are necessary for good health. It is estimated that over 50% of the households contacted were regularly eating only tortillas and beans in the summer of 1981, and 38% during the spring of 1983. However, even when small amounts of eggs, cheese, meat or fresh vegetables were consumed, the diet was not complete.

Typical agricultural production activities differed for the upland and lowland areas. In the upland area, the intercropping of maize, sorghum, and beans was typical. In the lowland, only maize and sorghum (intercropped) were found. By referring to Table 2, a comparison of typical yields of various practices shows that maize can be intercropped with sorghum with practically no decrease in sorghum yield. Sorghum grown alone was found in the upland area and yielded 1,860 pounds per mz., whereas the intercropped sorghum in the same area yielded 1,800 pounds per mz. (see Table 2). The intercropped

sorghum in the lowlands yielded 2,260 pounds per mz., which is better than the sorghum grown alone.

A comparison of the cropping systems and yields permits certain inferences. Although the 3-crop system produces crops valued (on the average) at $462, the subsistence supply of 264 pounds of beans is grown. The higher monetary value, $567, for the crops of the 2-crop system is offset by the cost of beans which must then be purchased for the diet. Growing beans in the lowlands is not feasible because they do not produce well, chiefly because of insects. The cost of bean seeds for planting may bring the two systems even closer to the same worth. The inference is that the lowland and upland farmers do not differ very much in the economic benefits of farming activities.

Since the goal of the farmers is to produce the foodstuffs of the traditional diet, the different cropping practices were evaluated with respect to the production of optimum nutrition by means of linear programming. It was found that the most nutritionally efficient systems were those which produced the highest yields of sorghum and beans. Maize, however, is preferred for the making of tortillas and is a more valuable crop. The growing of sorghum is a concession to environmental conditions, one which makes it possible for the farmers to subsist on their small farms since maize does not produce well in the area.

The findings concerning typical yields in terms of both the quantity of crops produced and the nutritional value of those crops show that resources are inadequate to supply well-balanced diets for all household members. The cropping systems are viable in the sense

that production is sufficient to furnish the basic staples for the traditional diet in sufficient amounts.[1] The average small farm, with present technology, produces just enough to supply the average household of seven persons with the recommended allowances of calories, protein and some of the essential nutrients. However, because some nutrients are not present in the staple crops in sufficient amounts, additional foods are needed. The absence of any surplus of the crops produced makes the purchase of additional food unlikely. Other food-producing activities, such as growing small plots of vegetables or fruits, or raising chickens and pigs, are engaged in on such a small scale that they do not overcome the deficiencies. In addition, other household needs (such as clothing or transportation) would be met by selling part of the crop, leading to a situation where even calorie requirements might not be met.

The subsistence farmers appear to be a self-sustaining "poverty trap". The solution to a linear programming model that was used to develop a nutritionally complete low-cost diet (using familiar and readily available foods) shows that a nutritionally complete low cost yearly diet would cost $1,165.54 at the prevailing market prices. This is $703.54 more than the value of the products grown (for the 3-crop system). Clearly, crops produced on the amount of land available cannot supply all nutritional requirements, and money for additional food items is needed.

---

[1]For the two-crop system of sorghum and maize, surplus production was shown to be sufficient to enable the purchase of beans but little else.

One solution might be an increase in crop production and the sale of such a surplus. In order to obtain an additional $703, 8,787 pounds of sorghum, 5,858 pounds of maize or 1,406 pounds of beans would have to be grown. If these were intercropped, this would mean that yields would have to increase 2.6 times for sorghum, 2.4 times for maize, or 40% more for beans. Or, at present yield levels, an additional 1.7 manzanas of land would be needed. This solution does not appear feasible under present systems of technology and land tenure.

Another solution might be work to earn the additional $703. Table 8 shows the prevailing daily wages (which are set by law), for the various occupational sectors in Honduras. To earn the amount needed would entail from 198 to 305 days of labor, depending on the wages that could be earned. At six days of labor a week, this would be eight to twelve months of outside employment for the farmer. This much time spent at wage employment would make it impossible for the farmer to raise the staple crops which supply his calories and protein. It is apparent that the farmer cannot raise enough of a surplus and cannot work enough at outside employment to purchase the food items needed to supplement the diet.

It seems, then, that economic, farming, and nutritional factors interact to produce a self-sustaining adaptation at minimal levels of nutrition, one in which a chronic state of under-nutrition seems inevitable.

It was also found that high rates of infant and child mortality are present, which brings up the spector of Malthusian principles.

Table 8. Minimum Wages Paid for Day Labor in Southern Honduras[1]

Occupational Sector	Amount Received per Day Lempiras	$U.S.
Agriculture & Livestock		
1-5 Workers	4.60	2.30
6+ Workers	5.00	2.50
Mining	6.60	3.30
Industrial Manufacturing		
1-5 Workers	5.30	2.65
6+ Workers	5.50	2.75
Crafts		
1-5 Workers	5.30	2.65
Construction (& Quarries)	5.30	2.65
Commerce		
1-5 Workers	5.30	2.65
6+ Workers	5.50	2.75
Transportation (People & Merchandise)	5.50	2.75
Merchandising	5.50	2.75
Finance	5.50	2.75
Services	5.30	2.65
Maintenance of Docks & Boat Repair	7.10	3.55
Loading & Unloading at Marine Ports	7.10	3.55
Refineries & Pumping Stations	7.10	3.55
Railroad Maintenance & Repair	7.10	3.55
Growing Bananas for Export	7.10	3.55

[1]Figures from La Tribuna, July 15, 1981, Tegucigalpa.

If an optimum adaptation to present resources has been reached, and if food supplies are barely adequate to sustain life, it is also possible that it is the nutritional factors which are serving to limit the size of this population.

An Alternative Solution

The most obvious and feasible solution toward the alleviation of some of the dietary deficiencies is to grow additional fruits and vegetables on a year-round basis. Each household has enough land near the house so that small vegetable gardens could be put in and easily cared for. As mentioned above, a few households were growing small plots of field peas in this fashion.

From the nutrient content of various vegetables, it is simple to calculate appropriate amounts of garden vegetables that would be needed to correct certain deficiencies. Figure 3 presents an example of how these activities could contribute to subsistence crop production.

The chart, Figure 3, shows that the addition of very small weekly supplies of vegetables could be grown to overcome the deficiencies of Vitamin A and ascorbic acid for a household of seven persons. Other means would be necessary to furnish adequate amounts of riboflavin and calcium.[1]

---

[1]For those households who do not use lime in preparing tortillas, extra calcium is needed.

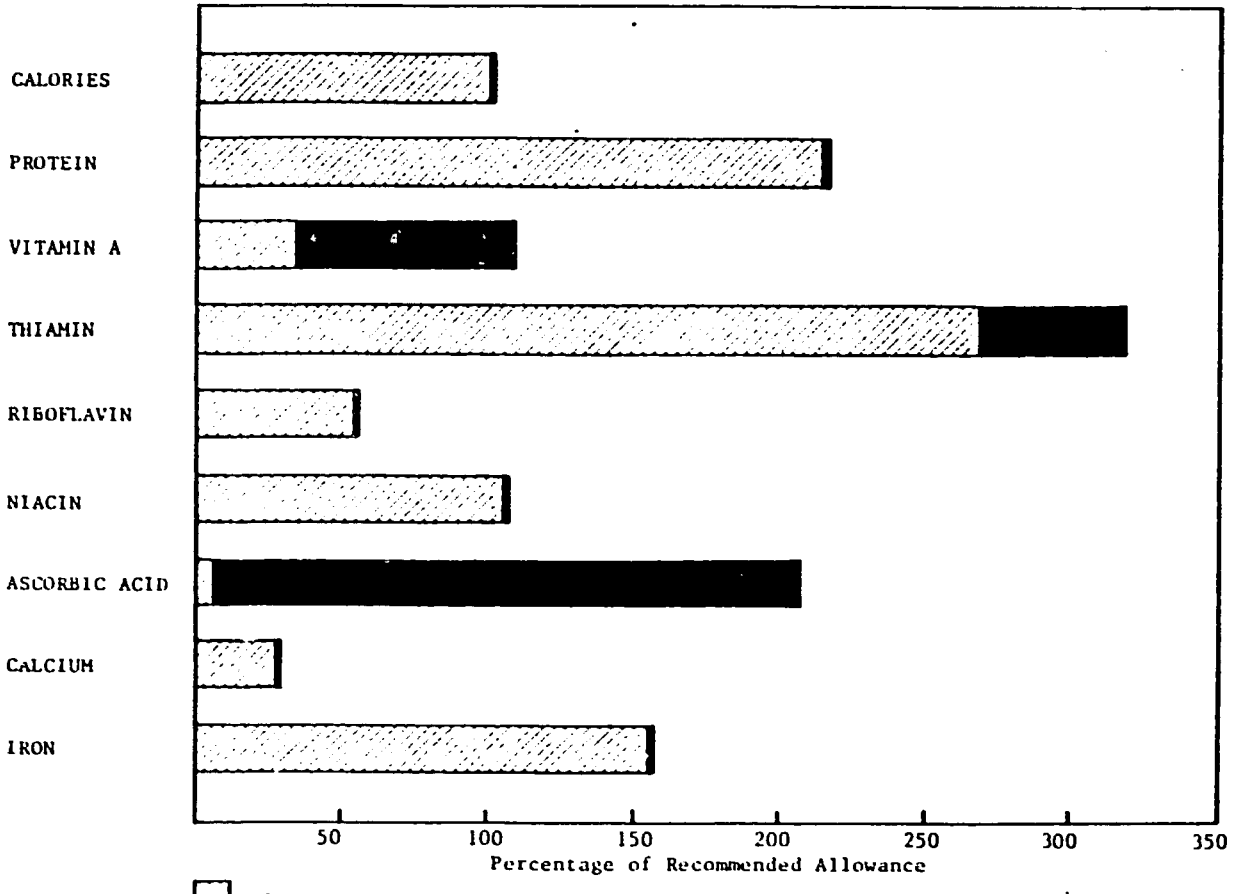

Subsistence diet of sorghum, maize, beans, and oil.

Weekly consumption of produce from small vegetable garden: 1 lb. carrots, 1 lb. broccoli, 1 lb. red peppers, 1 lb. green peppers, 1 lb. yucca (cassava) leaves, and 2 lbs. tomatoes.

Figure 3. Supplementing Nutrition with Vegetable Garden Produce.

It would be necessary to plan the gardens and test species for local environmental conditions and for year-round production. Suitable types of vegetables could be grown at different seasons. Also to be taken into consideration is the need for an educational program to teach farming families the importance of consuming these vegetables on a regular basis. It might also be necessary to furnish some education on successful gardening methods. Initially, extra labor would be needed to prepare a suitable plot and to fence out chickens, pigs and other animals, but labor connected with the production of small amounts of vegetables on small plots would not be excessive. Gardens should also be small so that they could be watered during the dry season.

Implementation and Implications

In the present case, political and institutional support exists for the INTSORMIL project with respect to the sorghum program in the form of government approval and the use of government facilities (the experiment station at La Lujosa) and personnel. It is not anticipated that there would be any opposition to such activities as vegetable growing and that decisions concerning such undertakings would lie with the farming families themselves.

Implementation of the gardening program would hinge on the ability of a change agent or agency to convince people that the increased use of vegetables for better nutrition would be worth the extra labor and time, since obvious economic benefits would not be apparent. Because vegetables do not have a high priority in the diets, substantial educational efforts concerning the nutritional needs of

various age groups would be necessary. Educational efforts would also have to be directed toward the appropriate members of the families concerning the technological aspects of gardening. Some means of watering small gardens during the dry season would have to be researched. Since vegetable gardens would most likely fall within the province of women's activities, suitable incentives and mechanisms for women's involvement would have to be found. Children's feeding centers, which already exist and where many of the women help in preparing food, might serve as such a mechanism.

In the case of the sorghum program, one of the major considerations is a policy one, the necessity of underwriting risk. In the subsistence systems of southern Honduras, a state has been reached in which household production barely suffices to feed family members at minimum levels. If the proposed innovation is successful, people will eat slightly better. If it fails, people may very well suffer increased hunger and death. Other than the objective risk involved, the farmers' perceptions of risk is also paramount to the project's success.

In summary, although small changes may be proposed, the systemic characteristics of subsistence farming and of the development process indicate that as a farming system embarks on a course of increased capacity or productivity, a new and different system results which is based on different economic and social principles. This new system may also reach a state of relative equilibrium with respect to inputs and organization in a relatively short time and may persist for some time. It is also possible that such changes may trigger an

accelerated rate of progress to even more favorable conditions. It is also possible, however, that disruptive and undesirable effects can result. A latent function of improved nutrition in the present case might be the reduction of child and infant mortality rates which, without birth control efforts, could lead to a population expansion to levels beyond that which the increased food supply could support. Or, equally possible, a change in old values might result in a desire to limit the number of children because not as many would be expected to die. It is also possible that, with better nutrition, farmers would be able to work harder and aspiration levels would rise.

Because better nutrition for the Honduras subsistence farmers, the goal of the INTSORMIL project, appears to be a highly desirable end, it is felt that better yields of sorghum and modest levels of additional vegetable foods easily grown by each household would improve the health and welfare of these families.

REFERENCES

DeWalt, Billie R., Kathleen M. DeWalt, Elizabeth Adelski, Susan Duda, Miriam Fordham and Karen Thompson
n.d. Cropping Systems in Pespire, Southern Honduras, unpublished report, Department of Sociology, University of Kentucky: Lexington.

FAO
1954 FAO Nutritional Studies, No. 11. Food Composition Tables: Minerals and Vitamins for International Use. Rome: FAO.

FAO/WHO
1973 FAO Nutrition Meetings Report Series No. 52, Energy and Protein Requirements. Rome: FAO.

Futrell, Mary, Louis H. Bluhm, Eunice R. McCulloch and Robert Jones
n.d. Socioeconomic and Nutritional Factors Relating to Grain Sorghum Production and Consumption in Southern Honduras: Preliminary Summary of 1981 Field Research Conducted by Mississippi State University. Unpublished report, Department of Home Economics and Department of Sociology, Mississippi State University, Mississippi State, Mississippi.

McCulloch, Eunice R.
1983 Optimum Resource Use or Inadequate Strategies: A Systematic Assessment of Social Factors and Diet of Subsistence Farmers in Southern Honduras. Dissertation, Mississippi State, Mississippi.

Simpson, C. Kelly
1982 Nutritional Status of Honduras Children in Two Nutrition Intervention Programs. Thesis. Mississippi State, Mississippi.

APPENDIX A

ENTREVISTA

PROJECTO INTSORMIL

Entrevistador_____

Fechas de las entrevistas:

Primera visita_____

Retorno_____

Retorno_____

Finalizacion_____

ENTREVISTADOR: BUENOS DIAS, ESTAS PERSONAS SON DE UNA UNIVERSIDAD DE ESTADOS UNIDAS Y YO SOY DE _____. YO LAS AYUDO CON SU TRABAJO. ELLOS TRABAJAN CON EL DEPARTAMENTO DE RECURSOS NATURALES AQUI EN HONDURAS A ESTUDIAR EL SALUD Y LA NUTRICION DE LA GENTE DE ESTA REGION. NOSOTROS ESTAMOS VISITANDO ALGUNOS PUEBLOS EN ESTA ZONA DE HONDURAS PARA APRENDER ALGO SOBRE EL SISTEMA DE CULTIVO Y SOBRE LA PREPARACION DE LOS ALIMENTOS EN ESTOS LUGARES. QUISIERAMOS SU COLABORACION Y LES GUSTARIAMOS PREGUTARLES ALGUNAS PREGUNTAS ACERCA DE SUS FAMILIAS Y ACERCA DE ELLOS MISMOS.

Datos

Numero de Casa _____

Pueblo_____

Departmento_____

Ubicacion en el_____
puebla (o en relación al pueblo)

Otros Datos_____

Nombre el jefe de familia_____

Nombre de la esposa del jefe de
familia o de la jefe de
familia_____

I. PRIMERA PARTE. INFORMACIÓN DE CASA
(CALQUIERA DE LOS DOS EL JEFE O SU MUJER PUEDE CONTESTAR ESTAS PREGUNTAS).

1. Para comenzar, quisiera preguntarle algunas datas sobre Ud. y sobre su familia. ¿Contará me quienes vivan en su casa?

Nombre	Edad	Sexo	Estado civil S	M	W	D	Parentazco con el (la) jefe de familia	Occupacion	Comentarios
1.									
2.									
3.									
4.									
5.									
6.									
7.									
8.									
9.									
10.									
11.									
12.									
13.									
14.									
15.									

(CONTINUESE LA LISTA EN OTRA PAGANA SI FUERA NECESSARIO)

2. ¿ Ha tenido otros hijos que hayan fallecido?
(PARA PREGUNTARSELE LA ESPOSA DEL JEFE DE FAMILIA O POR LA JEFE DE FAMILIA.)

_____1 Sí

_____2 No
(PASASE A LA PREGUNTA 5)

3. ¿ Cuántos han fallecido?

_____

4.

¿ A qué edades fallecieron?	¿ Cuáles de sus hijos fue este? (¿ Primero, segunda, tercero, cuarto, qunito, etc.?)
1.	
2.	
3.	
4.	
5.	

(CONTINUESE SE FUERA NECESSARIO)

5. ¿ Ha tenido alguna pérdida durante sus embarazas?

_____1 Sí

¿Cuántas?

_____

_____2 No
(PASASE A LA PAGINA 4)

48

II. DATOS ECONOMICA

QUISIERA, AHORA, SABER ALGO ACERCA DE SU TRABAJO.

1. ¿ Trabaja la familia en la agricultura?

_____1 Sí
(SI ES SI, PASESE A LA PREGUNTA 6.)

_____2 No

2. Si es no ¿qué tipo de trabajo hace el (la) jefe de familia?

_____

3. ¿Dónde hace este trabajo?

_____

4. ¿Cuántas horas por semana?

_____

5. ¿ Cuántas semanas por años?

_____

(PASESE A PAGINA 10, RECUERDO DE LAS 24 HORAS.)

6. ¿ Es el cultivo de los campos el trabajo de major importancia de familia?

_____1 Sí

_____2 No

7. ¿ Qué tipo de los cultivos simebra Ud.?
(PARA PREGUNTARSELE AL JEFE DE FAMILIA MASCULINO)

Cultivo o combinacion de los cultivos	Tamaño de la parcela (mzs.)	Tenencia de la tierra 1. propietario 2. arrendatario 3. cooperativa 4. otra (describa)	Sistema de herramientas y equipos (¿bueyes?)	Quiénes ayudan? (esposa, hijos, etc.)	Qué hacen esos personas?	Cuánta rindió en la cosecha año pasado	Cuáles cultivos falto, si algunas	Commentarios
1. Maíz maicillo & frijoles								
2. Maíz & maicillo								
3. Maíz & frijoles								
4. Maíz solo								
5. Maicillo (o sorgo, nota cuáles)								
6. Frijoles solo								
7. Otro (describe)								

(CONTINUESE LA LISTA EN OTRA PAGANA SI FUERA NECESSARIO)

8. ¿ Contracta a alguna persona para ayudarle en el cultivo de los campos?

_____1 Sí

_____2 No
(PASASE A LA PREGUNA 11.)

9. ¿ Quienes se contratadas?

_____

10. ¿Cuantos se les cobran?

_____

11. ¿ Además de agricultura, tiene tambien otro tipo el empleo?
(PARA PREGUNTARSELE AL JEFE DE FAMILIA MASCULINO)

_____1 Sí

_____2 No
(PASASE A LA PREGUNTA 13.)

12. ¿ Puedo describer esta trabajo?

Tipo de trabajo	Lugar de donde hacerlo	¿Cuándo? (¿temporado?)	¿Cuántos le dedica a esta trabajo?		Commentarios
			Horas por semana	Semanas por año	
1.					
2.					
3.					
4.					

13. ¿Ademas la agricultura, tienen otros en su familia en otro tipo de empleo?

_____1 Sí

_____2 No
(SI ES NO, PASASE A LA PREGUNTA 14.)

¿Cuál tiene a tal? (Lista cada personna)	Qué tipo trabajo	Lugar donde hacer	¿Cuándo?		¿Cuántos?	
			Orendado	Temporado	Horas por semana	Semanas por año
1.						
2.						
3.						
4.						
5.						

(CONTINUESE LA LISTA SI FUERA NECESSARIO.)

14. Hacen algunas cosas o siembran algúnas para vender las mujeres?

_____1 Sí

_____2 No
(PASASE A LA PREGUNTA 15.)

¿Cuáles (Lista cada personna)	¿Qué cosas hacen o siembran	¿Cada tiempo tienen ellas a la venta?	¿Cuántos precios receiben?	Commentarios
1.				
2.				
3.				
4.				

(CONTINUESE LA LISTA SI FUERA NECESSARIO)

15. ¿ Cultiva Ud. un jardin?

_____1 Sí
(PASASE A LA PREGUNTA 18.)

_____2 No

16. ¿Quiere Ud. un jardin?

_____1 Sí

_____2 No
(PASASE A LA PREGUNTA 19.)

17. ¿In su opinión, que sería necessario tendría un jardin?

_____

_____

_____
(PASASE A LA PREGUNTA 19.)

18. ¿Que cosas siembre Ud. in su jardin?

¿Qué siembre (Lista cada cultivo)	¿Cuándo temperado?	¿Cuántos produja?	¿Como se usa?	¿Cuantos vendió?	¿Donde le vendió?
1.					
2.					
3.					
4.					
5.					

19. ¿ Tiene Ud. los árboles frutales? (Mangos, bananas, anacardoes, aguacates, limas, limónes, naranjas, etc.)

_____1 Sí _____2 No
(PASASE A LA PREGUNTA 20)

Tipo de árboles	Cantidad	Como se usa los frutales	Cuántos esos vendio
1.			
2.			
3.			
4.			

(CONTINUESE LA LISTA SI FUERA NECESSARIO)

20. ¿Cría Ud. animales?

_____1 Sí _____2 No
(PASESE A LA PAGANA 10)

Animal (que clase)	Cantidad	Con qué los alimentos	Con que fin cría Ud. estos animales? Cuántos para:					Otro (describa)
			Carne	Canjear	Vender	Productos lacteos o de granja	Draft	
1.								
2.								
3.								
4.								

(CONTINUESE SI FUERA NECESSARIO)

21. (OBSERVERSE LA PRESENCIA DE LOS ANIMALES EN LA TIERRA DEL CAMPESINO.) ¿Despues de la cosecha, permite Ud. los ganados a comer los restos?

_____1 Sí _____2 No

22. ¿De quiénes son estos animales?

_____

III. DATOS DIETA

A. RECUERDO DE LOS ALIMENTOS DE LAS 24 HORAS PASADO

(SI ES POSSIBLE, PREGUNTA A VARIOS PERSONAS DE LA CASA. USA CUADRO SEPARADO PARA CADA UNO. SI ESTARIAN HIJOS EN LA CASA QUE TIENEN CINCO AÑOS O MENOS, INQUIRE RESPECTO SUS DIETAS Y AVERIGÜE COMO LOS ALIMENTOS DE ELLOS DIFEREN DESDE LAS DIETAS DE LOS ADULTOS. NOTA EN LA CUADRO DISTINTO CADO UNO.)

1. Me gustaria que me dijera toda lo que comio y bebio ayer.

	Hora	Lugar donde lo comio	Comida o bebida	Cantidad	Tipo de comida y/o su preparacion
Mañana Mañana medio					
Mediodia					
Tarde					
Noche Antes acostarse					

2. Fué un dia tipico? _____ 1 Sí _____ 2 No

3. ¿Cómo lo fué dintinto?

_____

55

B. DATOS ADICIONAL ALIMENTOS DE LOS HIJOS.

1. ¿A que edad comienza Ud. dar las tortillas a los hijos?

_____

2. ¿Es mejor a dar tortillas de maíz o de maicillo?

_____1 Sí _____2 No

3. ¿Porque?

_____

_____

_____

4. Puede decirme cuales comidas que Ud. da sus hijos de varios edades.

A dejar de mamar	2-3 años de edad	4-5 años de edad

IV. PREPARACION DE LAS COMIDAS.
(PREGUNTA A LA MUJER DE CASA.)

A. TORTILLAS.

1. ¿Que clase de tortillas come la familia al presente?

_____1 Maíz

_____2 Maicillo

_____3 Maíz y Maicillo mezcla

Porcentaje maíz_____

Porcentaje maicillo_____

_____4 Otro commentario

_____

2. ¿Utiliza la cal o la ceneza para las cocer al presente?

_____1 Cal

_____2 Ceneza

3. ¿Notara Ud. siempre una diferencia en como sesenta su estómago cuando se use la cal o la ceneza? (PREGUNTA A VARIOS PERSONNAS DE LA CASA SI ES POSSIBLE)

_____1 Sí _____2 No

4. Explica, por favor.

_____

_____

_____

B. PREPARACIÓN DE LOS FRIJOLES.
(PREGUNTA COMO LA PREPARACIÓN DE LOS FRIJOLES AND OBSERVE VARIOS CASOS.)

5. ¿Qué variedad(es) de frijoles usa?

_____

_____

6. ¿Qué cantidad de frijoles prepara cada dia?

_____

7. ¿Qué cantidad de agua usa?

_____

8. ¿ Cuánto tiempo estan los frijoles remojando en la agua? (¿durante la noche?)

_____

9. ¿Cuánto tiempo estan los frijoles cocenado?

_____

10. ¿A qué temperatura? (MIDA CON EL TERMOMETRO.)

_____

11. (DETALLEMENTE EL PROCEDIMIENTO DE PREPARACION DE FRIJOLES: REMOJANDO, COCIENDO, MOLIENDO, FREIENDO, ETC. ¿CUÁNTO TIEMPO POR CADA PARTE DE MÉTODO? ANOTE SALSA, SI ALGO, Y LA CANTIDAD DE ACEITE. TAMBIEN OBTAINA EL FORMULA SI LOS FRIJOLES ESTAN USADO MEZCLA CON OTROS COMEDAS.)

(AGRADEZCALE AL ENTREVISTADOS POR SUS COLABORACION. CONVERSE CON ELLAS SOBRE LA POSIBILIDAD DE HACER NUEVAS VISITAS SI FUERA NECESARIO.)