PN AAR-128

OPTIMUM RESOURCE USE OR INADEQUATE STRATEGIES: A SYSTEMATIC ASSESSMENT OF SOCIAL FACTORS AND DIET OF SUBSISTENCE FARMERS IN SOUTHERN HONDURAS

By

Eunice R. McCulloch

A Dissertation
Submitted to the Faculty of
Mississippi State University
in Partial Fulfillment of the Requirements
for the Degree of Doctor of Philosophy
in the Department of Sociology and Anthropology

000150
5

Mississippi State, Mississippi
May, 1983

Copyright by

Eunice R. McCulloch

1983

OPTIMUM RESOURCE USE OR INADEQUATE STRATEGIES: A SYSTEMATIC ASSESSMENT OF SOCIAL FACTORS AND DIET OF SUBSISTENCE FARMERS IN SOUTHERN HONDURAS

By

Eunice R. McCulloch

APPROVED:

Louis H. Bluhm
Associate Professor of Sociology
(Major Professor and Director of Dissertation)

Arthur G. Cosby
Head of Department of Sociology and Anthropology

John V. D. Saunders
Professor of Sociology
(Member of Committee)

Norman C. Merwine
Professor of Agronomy
(Member of Committee)

Carlton R. Sollie
Professor of Sociology
(Member of Committee)

Edward L. McGlone
Dean of the College of Arts and Sciences

Andrew W. Baird
Associate Professor of Sociology
(Member of Committee)

Marion T. Loftin
Vice President for Graduate Studies and Research

May, 1983

ACKNOWLEDGMENTS

This research was done under the auspices of the United States Agency for International Development Title XII International Sorghum-Millet Project (INTSORMIL) and I want to thank the project officers for the financial support that made my work possible.

I would like to express my deepest gratitude to Dr. Louis H. Bluhm, major professor and director of the dissertation committee, for all his guidance and encouragement throughout my work at Mississippi State University. To others on the dissertation committee, Drs. John V. D. Saunders, Carlton R. Sollie, Andrew W. Baird, and Norman C. Merwine, many thanks for the encouragement and helpful suggestions.

I want to especially thank Dr. Mary Futrell, project coordinator at Mississippi State, whose leadership and friendship has meant so much. And to Robert Jones, who shared with me the difficult but rewarding field experiences, also go my special thanks.

My appreciation also to Silvia Romero who translated the questionnaire into Spanish; to Dr. Jeff Wilson of the computer science department for his help with the analysis; and to Ruth Haug who helped so much during completion of the final draft.

And finally, I owe an immeasurable debt to my family and to my husband, Francis, for the unlimited patience and encouragement I received from them.

ABSTRACT

Eunice R. McCulloch, Doctor of Philosophy, 1983

Major: Sociology, Department of Sociology and Anthropology

Title of Dissertation: Optimum Resource Use or Inadequate Strategies: A Systematic Assessment of Social Factors and Diet of Subsistence Farmers in Southern Honduras

Directed by: Dr. Louis H. Bluhm

Pages in Dissertation: 282 Words in Abstract: 287

ABSTRACT

Characteristic of many subsistence farmers in less developed countries are inadequate levels of nutrition and scarce resources, particularly of land. For this study, sociological field work was conducted in southern Honduras as part of the research for an agricultural development project involving the introduction of higher yielding varieties of grain sorghum (USAID Title XII International Sorghum-Millet Project). Because of the systemic interdependencies of social, economic and cultural factors characteristic of subsistence farming, an interdisciplinary perspective is helpful in the study of agricultural innovations for such a population. Data collection for this project involved the use of several methods, a questionnaire, participant observation, and informants.

In this study, farming practices are evaluated with respect to the production of adequate nutrition within existing social and cultural patterns. Linear programming models are used to analyze agricultural production activities and diets and to evaluate alternative improvements.

It was determined that sorghum is an essential contribution to the traditional diet in the area. The amounts of sorghum, maize, and beans that can be grown on these small farms are adequate to supply average household requirements of calories, protein and some essential nutrients. There is a serious deficiency of certain essential nutrients in the diets which is attributed to both economic and cultural factors. Land and technological resources are inadequate for the production of any appreciable crop surpluses which would permit the purchase of additional food items. Other food-producing activities such as animal husbandry or vegetable gardening are not extensive enough to overcome nutritional deficiencies. Lack of knowledge concerning nutritional needs also contributes to existing conditions of malnutrition. Improvement of the nutritional status of this population would require additional inputs of both a technological and an educational nature.

TABLE OF CONTENTS

Chapter		Page
I.	INTRODUCTION AND STATEMENT OF PROBLEM	1
II.	THEORETICAL APPROACH	6
	Diffusion Studies	6
	Peasants and Subsistence Farming	9
	Success of Agricultural Development Projects . .	14
	A Proposed Nutritional Efficiency Model	20
	Physiological Requirements of Nutrients	23
	The Use of Linear Programming	30
	Statement of Hypotheses	32
III.	FIELD RESEARCH	33
	The Area and People	33
	The Localities Studied	34
	Farming Technology	38
	Life Style	40
	Data Collection	41
IV.	DESCRIPTIVE DATA	44
	Persons Interviewed	44
	Household Size	45
	Access to Land	46
	Cultural Roles	48
	Labor Input	52
	Diets	55
	Gardens and Orchards	57
	Animals and Animal Products	58
	Other Food Sources	60
	Crop Production	60
	Sorghum Storage	66
	Attitudinal Variables	66
	Food Preferences and Beliefs	70
	Family Size	72

Table of Contents, Continued.

Chapter		Page
V.	NUTRITION EVALUATION	76
	Average Household Requirements	77
	Nutrition Efficiency of Cropping Systems	77
	Protein Quality	82
	Quality of Diet	87
	Complete Nutrition Model	94
VI.	DISCUSSION AND RECOMMENDATIONS	98
	Cropping Activities and Diet	100
	Discussion of Hypothesis 1	102
	Discussion of Hypothesis 2	103
	An Alternative Solution	105
VII.	IMPLICATIONS OF CHANGE	112
	Some General Considerations	112
	The Present Case	115
Appendix		
A	Questionnaires	119
	English Questionnaire	120
	Spanish Questionnaire	189
B	Inventory of Most Commonly Used Food Items and Their Prices	256
C	Linear Programming Tables	259
C-1	Format for Nutrition Efficiency of Various Cropping Activities Matrix	260
C-2	Solution to Appendix C-1 Matrix	261
C-3	Cropping Activities with Vitamin A and Ascorbic Acid Nonrestrictive	262
C-4	Format for Amino Acid Matrix	263
C-5	Solution to Amino Acid Matrix	264
C-6	Solution for 3-Crop Model with Vitamin A, Riboflavin, Ascorbic Acid and Calcium Nonrestrictive	265
C-7	Format for Subsistance Model Matrix	266
C-8	Solution to Subsistence Model	267-268

Table of Contents, Continued.

Appendix		Page
C-9	Solution to Diet 3 Model	269-270
C-10	Format for Complete Nutrition Matrix . . .	271-272
C-11	Solution for Low Cost Yearly Diet	273-274

BIBLIOGRAPHY 275

X

LIST OF TABLES

Table		Page
1.	Household Size of Subsistence Farmers	46
2.	Age-Sex Composition of Average Household	47
3.	Size of Farms and Households	48
4.	Women's Occupations	49
5.	Women's Field Work Activities	51
6.	Frequencies of Man-Labor Units per Household	53
7.	Daily Diets During Season of Food Shortage	55
8.	Diets and Supplementary Food Assistance	56
9.	Supplementary Food Assistance and Kind of Tortillas Eaten	57
10.	Ownership of Animals	59
11.	Annual Average Yields and Value of Products	63-64
12.	Communication about New Farming Methods	68
13.	Farming Ideas Valued Most	69
14.	Frequency of Responses to Food Attitude Questions	71
15.	Number of Children's Deaths	73
16.	Ages of Children Who Died	74
17.	Mothers' Diets and Number of Children Lost	75
18.	Recommended Daily Intakes of Nutrients for Average Family	78-79
19.	Optimum Land Use for Supplying Nutrients	81

List of Tables, Continued.

Table		Page
20.	Average Family Essential Amino Acid Requirements	84-85
21.	Optimum Land Use for Supplying Essential Amino Acids	86
22.	Subsistence Activities and Nutritional Adequacy . .	90
23.	Foods and Their Contribution to the Low Cost Diet	95
24.	Minimum Wages Paid for Day Labor in Southern Honduras	104
25.	Amount of Each Vegetable Needed to Provide the Family Vitamin A Needs	107
26.	Amount of Each Vegetable Needed to Provide the Family Ascorbic Acid Needs	108

LIST OF FIGURES

Figure		Page
1.	Relational Diagram of Nutrition System	21
2.	Map of Honduras	35
3.	Supplementing Nutrition with Vegetable Garden Produce	110

INTRODUCTION AND STATEMENT OF PROBLEM

Until fairly recently, into the 1960's, the growth of the agricultural sector has been relatively neglected by policy makers, economists and planners in low income countries. In the past, industrial development has been given priority but with the dramatic increase in population within the last twenty years, development agencies have become increasingly aware that a race between food supply and population is in progress. There is a growing realization in the less developed countries that agricultural development is an essential step in overcoming the overwhelming problems of poverty and low productivity.

An increase in agricultural productivity as typified by the green revolution has had a noticeable impact since the 1960's. Rapid changes in agriculture have come with the introduction of new varieties and cultural practices (plant spacing, fertilization, and weed and insect control). Rice production in South Asia and wheat production in Mexico, India, Pakistan, and the Near East have increased dramatically. The green revolution has, however, provided only a small part of the benefits anticipated. In many cases, it has widened the gap between the successful and the poor farmers. In most of the developing countries, agricultural techniques are still primitive and subsistence cultivators represent a large segment of the population. Although Mexico was a relatively successful pioneer in

the green revolution, over 70% of its farmers still live at the subsistence level (Arnon, 1981). Today, subsistence farms occupy 40% of the cultivated land of the world and support 50 to 60% of the world's inhabitants (Wharton, 1969a, p. v),[1] albeit often in meager fashion.

Concerted efforts have also been made to assist small subsistence farmers by projects such as the introduction of cash cropping and large-scale regional development and settlement schemes in Africa, Mexico, and elsewhere.[2]

The introduction of agricultural innovations to subsistence farmers presents special problems. Primitive technology, poverty levels of income, limitations due to structural factors, both political and sociocultural, and psychological characteristics all present significant barriers to the improvement of subsistence agriculture. In addition to such inherent problems, all too often participants in agricultural development projects seem committed to the idea that the introduction of an improved technology, particularly that of higher producing varieties of grain, will automatically improve the lives of the people affected. Because governments of developing countries are most interested in large-scale development of the national economy, and because agricultural scientists come from a tradition of sophisticated scientific techniques used to improve the economic benefits of

---

[1] Cox (1979, p. 111) puts the amount of the world's cropland cultivated by subsistence farmers at about 60%.

[2] See Morss, et al., 1976, for a description of some of these projects.

commercial farming, the utility of primitive technologies and the resources of subsistence farmers are not given sufficient consideration. One of the most important lessons to be learned from a large number of development undertakings is that a thorough understanding of the complex interrelationships between economic, social, and cultural factors is essential to the success of such projects.

Characteristic of many subsistence farmers are inadequate levels of nutrition and capital and land resources. For this study, sociological field research was conducted in southern Honduras in an area with such a population. The area was targeted for the introduction of improved varieties of grain sorghum in an effort to improve the nutrition and general well-being of the people.

It was hypothesized that, in most cases, the land resources of the small-holding farmers studied are inadequate, with the present agricultural technology, to provide sufficient nutrition for their households. Where cereal-based diets constitute the major nutritional intakes, additional resources are needed to supply the necessary additional food for complete nutrition. In order to obtain these foods, farmers must either grow a sufficient variety of vegetable and animal foods, have a surplus to sell in order to buy needed supplementary food items, or have other sources of income such as outside employment. This hypothesis is tested by examining the interrelationship of economic and sociocultural factors.

In order to conduct a systematic analysis of the interaction of objective and cultural parameters, linear programming models were

developed. Actual diets and production figures were evaluated and this evaluation was used as a basis for assessing unmet nutritional needs in general and, more specifically, how new varieties of grain sorghum would be expected to meet either nutritional requirements or economic needs.

The villages in southern Honduras which were selected were in an area where grain sorghum is grown and is an essential item of diet during particular times of the year. The villages visited were of particular interest because of their adherence to traditional diets, primitive level of agricultural technology, and minimal levels of land and economic resources. Two different environments and two different types of traditional farming systems were documented: (1) a mountainous area with hillside cropping using only the most primitive techniques, that of planting stick and machete, and (2) a flat lowland area where steel-tipped wooden plows and oxen are used for planting, while other tasks (weeding, harvesting, threshing, etc.) are done by hand using a machete. In both areas, mixed cropping of the "interplanting" type (Norman, 1974) is the predominant system.

Data gathering was somewhat difficult because considerable effort was necessary to establish friendly contact and cooperation, information that people were willing to give was often selective, the rugged terrain and dispersed pattern of settlement in some areas made access to farms difficult, and the time available for the initial field study was somewhat limited. Nevertheless, sufficient information was obtained to make possible a descriptive ethnography of the

population of interest and of the farming and nutrition systems. Data collected included extensive information about food preferences and diets, food attitudes, nutritional status, farming methods and problems, land tenure patterns, work groups, crop yields, household size and composition, age distributions, infant and child mortality and, particularly, the role of sorghum in the agricultural and nutritional systems.

The data were collected as part of ongoing research for the USAID Title XII International Sorghum-Millet (INTSORMIL) project. This research for the Mississippi State University project, "An Interdisciplinary Approach to Nutrition Improvement of People Consuming Grain Sorghum and Pearl Millet as the Staple Food" (Project No. XII-MSU-3) was conducted in the summer of 1981.

In addition to the crop improvement research programs at several universities, it is considered essential to the overall success of the program to evaluate social and economic factors as well as agricultural methods and potential in various locations and countries before the on-farm introduction of new varieties of grain is attempted. This preliminary investigation in Honduras falls into the category of "exploratory" research (Selltiz, et al., 1976) since specific social, economic, dietary and agricultural information at the local levels was lacking and this type of field work was needed to establish baseline data.

THEORETICAL APPROACH

Several theoretical viewpoints have been utilized to develop the analytical framework for this study. Concepts from sociological diffusion theory, agricultural economics, nutrition, and farming systems studies have been helpful in the linear programming methods used to evaluate present practices and to suggest feasible improvements in agricultural and dietary behavior.

Diffusion Studies

The most widely used and well-developed paradigm in the field of agricultural innovation research is generally called the adoption perspective. Because this approach offers some useful theoretical concepts for the present study of the proposed introduction of new varieties of grain sorghum, a brief discussion of this area of research is presented.

Brown (1981) notes that the traditional approach to diffusion studies, which focuses on the demand aspect of diffusion, has dominated the field for about forty-five years and has had direct input into program design policies (including those of the U.S. extension service), family planning programs in third world nations, and development programs of the USAID. In spite of its shortcomings, the adoption perspective on innovation may be one of the most successful

of all social science paradigms (Brown, 1981, p. 5). Perhaps the most widely known and referred to discussions of the adoption perspective are those by Rogers (Rogers, 1969; Rogers and Shoemaker, 1971) who has refined and elaborated many of the earlier concepts.

The basic tenet of this approach is that the spread of an innovation is primarily the result of a learning or communication process. Therefore, the study of the process of diffusion begins with the identification of factors related to the flow of information and of the nature of the information, the characteristics of the senders and receivers of this information, and resistance to adoption. Resistance or acceptance of an innovation depends to a large extent on an individual's general propensity to adopt which is called "innovativeness." Innovativeness depends on a variety of social, economic and psychological factors. Another important aspect of resistance is the nature of the innovation itself--its congruence with the existing social, economic and cultural systems of the potential adopter.

Many early empirical studies were utilized in the development of this classical adoption theory. Lionberger (1960) reviews a number of the early studies dealing with the communication and adoption of agricultural ideas and practices, chiefly in the United States. Some of the best known of these are the Ryan and Gross studies of the diffusion of hybrid seed corn in Iowa (Ryan and Gross, 1943, 1950), in which many of the concepts concerning the social and economic characteristics of the adopters were formulated, and studies which elaborate on the concept of stages in the adoption process (Beal,

Rogers and Bohlen, 1957; Subcommittee on the Diffusion and Adoption of Farm Practices, 1951).

There have been many refinements on this basic adoption perspective, such as an incorporation of a spatial dimension (Brown, Malecki and Spector, 1976); the comparison of the innovativeness of individuals of the "lower middle class" with those of the "upper middle class" (Cancian, 1979); the micro-environment approach focusing on individual motivations for adoption of agricultural practices, motivations related to a difference in environment for late acceptors as compared with that for early acceptors (Ashby, 1982); and many others.

Within the framework of the general adoption perspective, independent or determinant variables are often differentially emphasized depending upon the purpose of a particular study or the relative importance of situational, cultural, or other factors. Although resource availability is central in all situations, in studies of adoption in the more developed countries, social status appears to be useful in comparing the adoptive behavior of large and small farmers, whereas in developing countries, political and institutional delivery systems assume greater importance. The general theory assumes that the opportunity to adopt is equal for all potential adopters, an approach which is difficult to apply to subsistence cultivators in less developed countries. In treating resistance to adoption by such farmers, personal sociocultural and psychological traits are most often used as explanatory variables. This viewpoint is felt to be inadequate.

Brown (1981), a geographer, describes the traditional adoption perspective as the "demand" approach and offers an alternative but complementary view. This he terms the "market and infrastructure" perspective, which focuses on the supply aspect of diffusion, the process by which innovations and the conditions for adoption are made available to individuals or households. This approach holds that individual behavior does not represent free will so much as choices within a constraint set and that it is government and private institutions which establish and control the constraints. This perspective could be helpful if incorporated into the adoption studies of small farmers in less developed countries.

The two views concerning adoptive behavior, one that responsibility rests with the individual (the adoption perspective) and the other, that diffusion and innovativeness are determined by access to the means of production and public goods, both provide a general basis for the study of subsistence farmers and the adoption of agricultural innovations. It is necessary, however, to develop more specific concepts concerning the nature of subsistence farming systems and characteristics of peasant farmers.

Peasants and Subsistence Farming

In order to develop an appropriate theoretical perspective regarding the introduction of agricultural innovations to peasants or subsistence farmers, it is useful to describe and define the nature of the potential recipients. In adoption studies it has been customary to use the terms subsistence farmer and peasant interchangeably

(Rogers, 1969). Wolf (1955) defines peasants as agricultural producers in effective control of land who carry on agriculture as a means of livelihood, not as a business for profit. A peasant may sometimes sell crops to buy certain goods and services he needs, but his aim is subsistence and not reinvestment. Foster (1962) emphasizes that peasant societies are not self-sufficient but exist as part-societies dependent on the larger society and retain identifiable cultures and values of their own.

In studies of innovation adoption and modernization, two opposing views regarding the motivations, attitudes and values of the traditional subsistence farmer predominate in the literature. The view most often used by anthropologists and sociologists is that non-economic considerations outweigh economic ones in governing behavior and decision-making. In a discussion of motivations, attitudes, and values of what he calls a subculture of peasantry, Rogers has listed ten elements which he feels are "functionally interrelated in consistent harmony" (Rogers, 1969b, p. 114). These are: "1. Mutual distrust in interpersonal relations. 2. A lack of innovativeness. 3. Fatalism. 4. Low aspirational levels. 5. A lack of deferred gratification. 6. Limited time perspective. 7. Familism. 8. Dependency upon government authority. 9. Localiteness. 10. A lack of empathy." (ibid., p. 115). As stated, these generalizations are felt to present an exaggerated evaluation of factors contributing to resistance to adopt innovations.

A second theoretical approach more characteristically used by agricultural economists holds that the subsistence farmer is indeed

an economic man and acts within the bounds of economic rationality. The condition of economic equilibrium or stagnation in which he finds himself is due, not to subjective attitudes, but to conditions over which he has no control. Many agricultural economists (Norman, 1979; Clark and Haswell, 1970; Haswell, 1973; Wharton 1969b; Schultz, 1964; to name a few), who deal with subsistence agriculture, in general stress that such farmers seek to maximize production and profit but admit that classic economic analyses do not apply and that ambiguous results are obtained when purely economic models are applied to subsistence or peasant agriculture.

Norman (1979, p. 79) notes that subsistence farming can be defined in various ways and is frequently used with reference to dietary standards to signify a barely adequate intake, or it may be used in socioeconomic terms to refer to the proportion of goods and services produced on the farm or purchased or sold elsewhere. A pure subsistence unit (i.e., self-contained) is seldom found today. As most commonly used, subsistence farming is where "the main thrust of the production effort is directed toward supplying the food requirements of the production unit itself." (ibid., p. 71). In addition, such characteristics as low levels of income, production technology and purchased inputs; substantial socioeconomic restrictions on decision making; substantial influence of interpersonal relations upon patterns of activity; and labor input chiefly by family members are used by Wharton (1969b) to describe subsistence farming.

Ruthenberg (1976) believes that the farm system approach is a meaningful way to order the diverse phenomena related to agricultural

development but suggests that it is appropriate to look at the household-farm system instead of production systems. "In small-holder farming, farm and household are very closely related. Most small-holders in the tropics aim at producing their subsistence food requirements on their holdings and food supply from farm to household is organized according to the needs of the household which itself depends on the phases of family development." (ibid., p. 5). In a system of this type, labor, land and means of production are the inputs; the outputs are goods sold and consumed in the farm household. For subsistence systems, the proportion of system produced inputs in relation to total inputs is high. Every production of a specific crop on a specific soil type in a specific season of the year with a specific husbandry technique is regarded as a distinct activity. Generally, the strength of relationships between activities is more pronounced the scarcer the land, the lower the producer prices, the higher the prices for inputs and the less favorable the natural conditions. This emphasis on the needs of the household within a systematic framework will be shown to be applicable to the present study.

Schultz (1964) is the most outspoken proponent of the view that traditional agriculture is characterized by a rational and efficient use of resources. He is critical of the views that peasants may lack the economic virtues of the Protestant ethic, that people do not care to work long and hard, will not save enough to get ahead and that cultural patterns cause indulgence in wasteful consumption. He believes that it is not necessary to appeal to cultural differences to explain work and thrift behavior, that economic factors provide a satisfactory

explanation. Incentives to work more are weak because marginal productivity of labor is very low and incentives to save more are weak because marginal productivity of capital is very low. He points out that it must also be taken into consideration that low productivity can lead to a lack of vigor and stamina to work long and hard.

Agricultural economists often point out that one of the major strategies employed by subsistence farmers, the use of which demonstrates economic rationality, is the practice of multiple cropping, particularly interplanting and intercropping. "Such practices seem likely to provide better soil protection, more efficient use of nutrients and solar energy, and a higher level of biological pest and disease control than monocultures. It is possible that in some systems labor requirements may be reduced because of a decline in problems from weed growth." (Cox, p. 672). Norman (1979) points out that mixed cropping is a rational strategy for profit maximization and risk minimization under marked seasonal distribution of rainfall. Francis (1979), an agronomist, notes that mixed cropping has the advantage of spreading the harvest over time in the year to maximize family labor and provide food over the year, observations which are highly relevant to conditions in the areas studied. He shows that mixtures of beans and maize have outstanding advantages in terms of crop yields, protein yields, land efficiency ratios and net returns. In trials of monocropping versus intercropping of beans and maize, Francis and Sanders (1978) demonstrate the advantage of intercropping for yields, net returns and risk.

As with general adoption theory, consideration of an additional dimension is needed when dealing with agricultural development of subsistence farming, one that goes beyond individual behavior. Parsons (1971) stresses that the issue of behavioral change centers in the nature of the system within which performance occurs. He argues that major social and institutional change is necessary to transform traditional agriculture. Arnon (1981) focuses on the delivery of appropriate technology to subsistence farmers and believes that subsistence farmers who produce barely enough for the basic requirements of the family are not necessarily traditionalists by choice. They cannot normally adopt technological innovations unless circumstances are changed.

Both of the two rather extreme perspectives regarding adoption behavior of subsistence farmers have considerable merit and the most useful approach depends, of course, upon the nature of the research undertaken. A brief review of several agricultural development projects adds to the understanding of the complexity of adoption factors.

Success of Agricultural Development Projects

Morss, et al. (1976) have evaluated the success of thirty-six programs for small farmer development in various developing countries and environments. The analysis and comparison of the twenty-two projects in Africa and the fourteen in Latin America provide some interesting insights into the interaction of the nature of agricultural innovations and a variety of cultural, economic, and political factors. The index for ranking success was based on income per cost,

agricultural knowledge disseminated, self-help, and the likelihood of becoming self-sustaining. The three projects most successful overall were the Uboma Development Project, East Central State in Nigeria; the Tiv "Bams" and Farmers' Association, Benue Plateau State, also in Nigeria; and the IBRD Agricultural Development Project, MacCarthy Island Division in Gambia. The three least successful for which it was possible to derive a comparative index were the ICA (Colombian Agricultural Institute) Rural Development Project for Northern Cauca, Valle de Cauca in Colombia; the Ghanian-German Agricultural Project, Northern and Upper Regions in Ghana; and the Vihiga Special Rural Development Program, Western Province in Kenya.

The objectives of the Uboma project were to improve the yields of major food crops, to improve the diet of the people through additional protein, to increase earnings from agriculture by expanding and diversifying the production of cash crops, and to improve the quality of social services and infrastructure in the area. The success of this project was attributed to a thorough understanding of the social organization which enabled the utilization of traditional autority and communication patterns. Local leaders were involved in decision making. In addition, technological innovations were simple ones and there was a concentration on income producing activities.

Similarly, the success of the Tiv "Bams" and farmers' organization in Nigeria is attributed to the involvement of the farmers themselves. The design of the organization was determined by the Tiv themselves who were aware of the social and political characteristics of their society and of farmers' needs. Traditional patterns of

leadership and farmer involvement and control over decision making led to the development of indigenous capabilities and to a successful program.

The IBRD Agricultural Development Project begun in 1973 in Gambia was a plan to place 3,000 acres of land under irrigation for rice production. It was deemed a success in spite of severe initial handicaps. Farms were small, averaging only four acres, rural incomes were low, the rural infrastructure was poorly developed and tribal differences were great. This project demonstrated the importance of integrating local farmers into the decision-making process, making it possible to modify the program to fit local circumstances. Other factors which contributed to the project's success were the low cost of providing technical assistance, the willingness of the farmers to use credit and pay interest upon the delivery of a technologically sound package, and the method of graduated stages to introduce change; that is, a proven technological innovation was introduced first which was later followed by a more comprehensive program.

Contrasting with these successes, the Cauca project in Colombia which was copied after the Puebla project in Mexico was unsuccessful because the range of activities was too broad and changes were attempted too fast. Research station results were not tailored to local circumstances, the credit program was implemented before cash crop production was adequately proven and the marketing arrangements were insufficient which led to a sharp fall in prices. Much of the difficulty was attributed to the fact that the program was administered by a government agency using old, previously ineffective, methods.

The Ghanian-German Agricultural project, begun in 1970, was an attempt to assist the small farmer by making fertilizer, improved seeds, land clearing, mechanization, and information available. The chief difficulties which contributed to the relative lack of success were the administration of the program through a poorly developed government bureaucracy, improper government emphasis on mechanization, and an insufficient agricultural extension staff. Although small farmers were anxious to avail themselves of the benefits of this program, increases in income were realized chiefly by the larger farmers.

The Vihiga project, begun in 1970 by the government of Kenya and the USAID, was a project designed by government officials to implement twenty-six rural development activities. Because the project was designed by government officials without consultation with local leaders and farmers and improper communications networks were utilized, it was perceived by local farmers as a project for the government. In addition, the credit program which was part of the project was not congruent with farmers' needs.

It is also of interest to note the findings concerning such well known projects as Plan Puebla and Plan Maize in Mexico, both of which were judged moderately successful, and the Vicos Project in Peru, which was rated as not very successful.

Plan Puebla in Mexico, begun in 1967, is generally regarded as a success for this type of venture. It was aimed at increasing the yields of the basic food crop, maize, for the subsistence producer, and sixteen separate packages developed for specialized micro-regions were introduced. Some of the major shortcomings have been that

available mixtures of fertilizer have not been tailored to micro-environments; there was an initial disregard for farmers' preferences to grow corn and beans together; competition, friction, and lack of communication between staff members has prevailed; and, there has been inadequate crop insurance reimbursement. The project has been a success from the standpoint of increasing incomes and raising the standard of living, but this has come about very slowly. The chief difficulty, as noted by Morss, et al. (ibid.) has been, not in persuading the small farmers to adopt new technology, but in changing the attitude of outsiders toward small farmers.

Plan Maize, begun in 1971 in Mexico, was also a credit and technical assistance program aimed at increasing maize yields on small farms chiefly by the heavy use of fertilizer. It was found that small farmers were more likely to adopt new technology when taught by a knowledgeable local farmer rather than a non-local such as an extension agent. The program has also been characterized by the poor performance of the federal crop insurance program, as was the case for Plan Puebla.

The initial success of the Cornell University social experiment begun in 1952 at Vicos in Peru was checked by a series of disasters. In 1969, a potato blight resulted in a quarantine on market sales of this crop on which the economy of the settlement was based. In 1970, a severe earthquake further depressed the area, after which the government persuaded the Vicosinos to accept a dairy cattle loan and to change from growing a subsistence food crop to growing cattle forage crops. The animals obtained were inferior and the people returned

them which destroyed their credit rating. Vicos has now reverted back to a subsistence economy. The failure of this project can be attributed largely to two factors (ibid., pp. 427-429): 1) Although Cornell spent five years establishing changes in behavior and attitudes of the Vicos inhabitants, and although they had been on their own for over a decade, this was not enough time for them to become truly capable and self-sufficient. In addition, the imposed behavior pattern proved inadequate for dealing with unforeseen circumstances. 2) An agricultural development program based on a single cash crop is inherently vulnerable. In this case such a modernization strategy led to disaster for the participants even though the social, economic, and infrastructure aspects of the program had been well thought out.

From the foregoing examples given by Morss, et al., it is apparent that where intense resistance to agricultural innovations due to cultural factors was encountered, it was the result of a failure to include the farmers in planning, needs assessment, and decision-making, leading to the promotion of inappropriate crops and enterprises. An inherent lack of innovativeness or economic rationality did not appear to be an important deterrent. Equally important to a project's success was a consideration of indigenous sociopolitical systems and culturally appropriate lines of communication. A minor theme was the actual exploitation of small farmers such as the crop insurance plans in Colombia and the introduction of inferior cattle at Vicos.

A Proposed Nutritional Efficiency Model

For this study, a somewhat different approach has been utilized. Both objective economic factors and subjective cultural factors are considered to be important. The goal of food production is primary. The problem is limited to an evaluation of the capability of the subsistence farmers to supply adequate nutrition for their households within existing technological and economic constraints and within the present system of dietary preferences or habits. The degree of nutritional sufficiency or shortfall is viewed as an indicator of the farmer's capacity to take the risks which may be involved in the adoption of new varieties of food crops.

For the purpose of structuring the data collected for this study in a way that focuses on the goal of food production, the relational diagram, Figure 1, was developed. This diagram or model is intended to present a comprehensive and convenient framework for the presentation and analysis of the data relating to the population of study. Although detailed data were not obtained for all of the variables shown, all factors which are judged to be most relevant to the nutritional status of the subsistence farming households are included in the diagram.

As is indicated in the diagram by the dotted line, which represents environmental boundaries, cultural norms and preferences form a part of the environment for the system within which social, economic, and technological factors interact to provide nutrition. In other

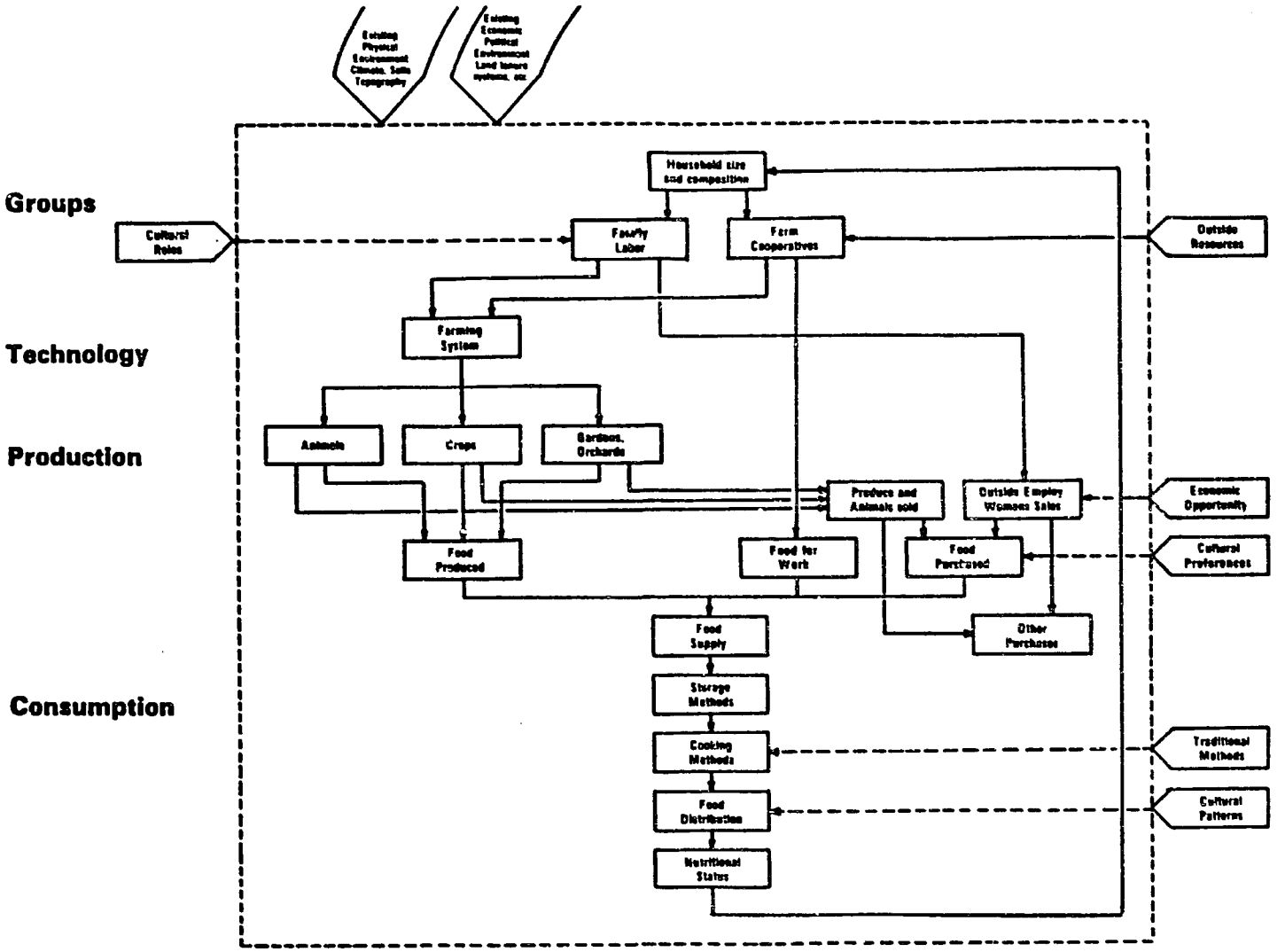

Figure 1. Relational Diagram of Nutrition System.

words, the perspective which has been adopted assumes that subsistence farmers are economically rational given that their chief motivation is the provision of food for their households.

A study by Sturt (1965) relevant to this approach deals with motivations, aspirations, and perceived constraints for changes in farm practices in West Pakistan. The wide variety of changes that had taken place included cropping patterns, varieties of seeds planted, use of fertilizer, time and method of planting, harvesting practices, kinds of farm implements used, storage methods, numbers of livestock, and the addition of other enterprises. Sturt found that the primary reason for wanting to increase production was the desire to produce more food for family consumption. Little interest was shown in better housing or things to improve home life or for ornaments, entertainment or religious purposes.

Deutch (1971), whose main interest is in the systematic effects of the political infrastructure of a developing country, also notes the importance of food production as a primary motivation. He states that economists frequently complain that where land reform takes place and more land is given to country people, the first thing these people will do is eat more and diminish the amount of farm produce available for the cities and for export. As he puts it, it may be that the first infrastructure of agriculture may need to be in the stomachs of the village population--then perhaps they will have the strength to do a productive day's work.

Physiological Requirements of Nutrients

For this study it was necessary to apply certain principles of nutrition in order to evaluate the diets of the population. A great deal of research has gone into the establishment of physiological requirements in terms of energy, proteins and other essential nutrients. A brief review of these needs will be presented.

The physiological requirements for calories, protein, Vitamin A, thiamin, riboflavin, niacin, ascorbic acid, calcium and iron are given in most references as those most important in an adequate diet. Most food tables give values for these elements.

(1) Calories.

Energy or calorie requirements vary according to body weight, temperature of the environment and level of activity. Most tables, as in the FAO/WHO (1973) publication, are based on populations with particular average adult male and adult female weights. One such table given by this source presents energy requirements for people of a developing country with the average male weight at 53 kg.; female, 46 kg.,[1] with daily Calorie[2] needs of 2,318 and 1,840, respectively. Of those available, these values are considered the most applicable for the present study.

Energy or calories and protein requirements are the primary considerations in judging the adequacy of food intake. Clark and Haswell

---

[1] Clark and Haswell give 55 kg. as the average adult male weight for Latin America.

[2] Calorie units when capitalized refer to kilocalories.

(1970) hold the view that a community at the lowest level of productivity and living mostly on cereals will receive enough protein if the supply of calories is adequate. They give the figure of 210 kg. (462 lbs.) of grain per person per year as the subsistence minimum.[1]

Norman also takes a similar view, that the total energy input is of major importance for tropical people on a cereal diet. He feels that protein intake is sufficient with the addition of legumes and vegetables supplemented with a little meat or fish (Norman, 1979, p. 48).

Joy agrees with the views taken by Clark and Haswell and Norman: "The nutrition problem is commonly regarded as being, above all, a problem of protein deficiency. Paradoxically enough, most of those suffering from protein deficiency eat more than enough protein to meet their protein requirements. However, because they do not eat, in total, enough calories, the protein that they eat is not utilized as protein for growth or maintenance of body tissue but as calories to supply their energy needs. People whose calorie intakes are adequate are not generally to be found suffering from protein deficiencies." (Joy, 1973, p. 165).

Data on daily expenditures of energy were not obtained during this research but some general statements are relevant. Norman (1979) gives the figure of 8.4 megajoules (2,016 calories) per day per person

---

[1]This figure of 1.26 lbs. per day is somewhat high. The analysis for this study will show that 1.14 lbs. per person is adequate if the grains are maize and sorghum.

as a subsistence level of intake.[1] Although field work on a farm may require as much as 1.06 megajoules (252 Calories) per hour; walking, 120 Calories; sedentary activities, 79 Calories; or sleeping, 62.4 Calories (Norman, 1979), Haswell (1973) states that for a full working day the average energy expenditure is remarkably constant and averages only about .7 MJ (168 Calories) per hour for a typical working day of 5 hours work (a total of 840 Calories). Norman's (1979) assessment is that the typical African adult male works 5 hours at an energy expenditure of 1,260 Calories and uses a daily total of 2,664 Calories. For the tropics in general, Norman gives the average energy requirements of adult males as ranging between 10 to 12 MJ (2,400 to 2,800 Calories) per day, and for the population as a whole, 8 to 10 MJ (1,920 to 2,400 Calories) per day.

Seasonal variation in intakes of calories and protein are also important in subsistence agricultural systems. Clark and Haswell (1970) note that there is often a 30% variation in calories and a 45% variation in protein intakes in Sudan between the periods right after the main harvest and in the early rainy season. They point out that during the time of lowest nutritional intake, labor requirements are the greatest. These conditions also prevail for the Honduran farmers of this study.

---

[1] This is close to the computed figure of 1,987 Calories per person per day based on FAO/WHO recommended intakes for the average family of this study.

(2) Protein.

Proteins are essential for building the growing body, for the repair of tissues, and to produce metabolic and digestive hormones which are formed from amino acids. Proteins are also used by the body to provide energy if the calorie requirement is not met from carbohydrates and fats.

In addition to the quantity of protein in a diet, the nutritional quality is also important in assessing the protein value of a diet. Of the approximate 20 amino acids commonly found in dietary proteins, there are those that cannot be synthesized by the body and must be supplied through the diet. These "essential" amino acids are isoleucine, leucine, lycine, methionine plus cystine, phenylalanine plus tyrosine, threonine, trypotophan, valine, and histidine. Histidine has been found to be essential for infants but its need has not been established for other ages.

In general, cereal proteins are considered to be of poor quality in the amino acid patterns, being particularly poor in lycine. Other problems with the amino acid balance relate to the high leucine content in relation to other amino acids, particularly in sorghum. Digestability of proteins is also an important factor and various methods of cooking affect utilization.

This study uses the FAO/WHO (1973) recommended intakes for energy and protein requirements. For the amino acid content of foods, the tables given in the FAO publication Amino-Acid Content of Foods and Biological Data on Proteins (1970) were used.

(3) Vitamins.

The vitamins which are considered essential nutrients for the purposes of this study are Vitamin A, thiamin, riboflavin, niacin, and ascorbic acid. Even though these vitamins may be needed only in small amounts, they are vital for health and it was felt to be of particular importance to evaluate the adequacy of these nutrients in the study since cereal-based diets are often deficient in several of them.

(a) Vitamin A.

Vitamin A is necessary for healthy vision and to keep the epithelial tissues intact. Among nutritional disorders affecting infants and young children, Vitamin A deficiency ranks second after protein-calorie malnutrition (Wilson, et al., 1975). It is important, therefore, to assess the sources of Vitamin A available to the population.

(b) Thiamin.

A thiamin deficiency is more often found where the staple food is rice than it is where diets are based on such cereals as maize or sorghum. This deficiency can lead to beri-beri of which there are three types, acute cardiac, wet and dry. Whole grain cereal diets contain considerable thiamin but this essential nutrient can be lost by processing and cooking. The requirements for thiamin depend on the composition of the diet; persons consuming large quantities of fat need less thiamin.

(c) Riboflavin.

Because of low intakes of meat, milk, eggs and leafy green vegetables (sources of riboflavin) in the Honduran diets, the

determination of possible riboflavin deficiencies is of utmost importance. The most common symptoms of riboflavin deficiency are swollen and sore lips with cracks at the corners of the mouth and an oily crust or scales on the skin. Conjunctivitus and watering of the eyes may also occur (Nicholls, 1961).

(d) Niacin.

Pellagra has been associated with diets in which the staple cereal is maize, according to Nicholls (ibid.) This disorder is produced by a deficiency of niacin (nicotinic acid) and the disease affects the skin, the gastrointestinal tract, and the nervous system. Wilson, however, contradicts the view of Nicholls, stating that, "It is interesting to note that pellegra is rarely reported in Central America where corn is a staple food; the reason may have something to do with the fact that corn is treated with lime before it is used." (Wilson, et al., 1975, p. 266). In Honduras, where both maize and sorghum were treated with lime in the preparation of tortillas, typical skin lesions were observed among some of the population and special attention was given to the adequacy of this nutrient during this study.

(e) Ascorbic Acid.

Ascorbic acid presents a special problem for this study. Good sources of this vitamin such as citrus fruits, melons, pineapples, mangoes, guavos, cabbage, and tomatoes could readily be obtained or grown by the Hondurans but there is evidence that these items are scarce in the meagre diets. A serious deficiency of this vitamin leads to scurvy. At the early stages, symptoms include weakness, loss

of weight and pains in the arms and legs. These symptoms may be followed by the formation of a horny growth in the hair follicles followed by hemorrhages around the hair follicles, followed by progressive swelling of the gums, and the gums become blue-red. The teeth may become loose and fall out. Wounds may fail to heal. In advanced stages there may be bleeding from the nose, lungs, bladder or bowels. Infantile scurvy, according to Nicholls (1961), often occurs where children are fed on cereal paps and weaned on milk reconstituted from powde without the addition of fruit or vegetable juices to the diet. Signs and sumptoms of this deficiency in infants may be less obvious than in other age groups and will be exhibited as irritability with general ill health and perhaps pain and tenderness of limbs.[1]

(4) Calcium.

Calcium requirements have not been clearly established and standards are based largely upon estimates of the amount of calcium required to maintain calcium balance in the body. As protein intake increases, calcium needs decrease. Moreover, in many tropical countries where people have smaller statures it has been found that children who have lived on calcium deficient diets have possessed well formed bones that contain a normal amount of calcium. Probably if all other factors needed for growth, especially Vitamin D, are adequate, a deficiency of calcium may limit the bones but does not lead to malformation (ibid., p. 31). FAO/WHO recommendations are the "suggested practical

---

[1]Among the Hondurans observed, there were quite a few cases of bleeding bluish-looking gums. Very small children also often exhibited the symptoms described for infantile scurvy.

allowance," the intake at which the needs of the majority of a population could probably be adequately met.

(5) Iron.

Iron requirements vary depending on whether the source is animal or plant foods. Cereal-based diets in general have a greater iron requirement. This has been taken into consideration in computing the various requirements for this study.

The cereal diets of the Honduran farming families were expected to contain enough iron. However, because parasitic infections are high, some anemia was probably present. Nicholls points out that the amount of iron in foodstuffs varies enormously even among different samples of the same foodstuff because the amount of iron in a plant is determined in large part by the per cent of iron in the soil (ibid., p. 42). The average values given in food content tables were considered adequate for analytical purposes. Had iron supplies been found to be deficient or nearly so, which was not the case, additional factors would have been taken into consideration.

The Use of Linear Programming

Linear programming has been most widely used in business and industry but is also a commonly used tool in farm planning to find combinations of activities that optimize resource use. (See Dalton, 1975; Beneke and Winterboer, 1973.) Some agricultural economists feel that farm planning techniques are inadequate to deal with the problems of farmers in less developed countries. "Their special problems include

(a) greater susceptibility to risk, (b) few resources and hence less ability to cope with risk, (c) complex timing of labour inputs and (d) greater interdependency between farm and household." (Curnow and Upton, 1975, p. 190). Other researchers in developing areas have effectively used linear programming to make a variety of recommendations concerning optimum resource use. Eric Clayton (1961) has done this for areas of Kenya and has shown in detail how certain governmental recommendations concerning mechanization are uneconomic. Clayton states that linear programming appears as the most useful research tool to apply to peasant farming. Heyer (1972) has also worked in Kenya. He has extended the use of linear programming to examine various outcomes associated with different optimal strategies in a simple but effective way that permits an evaluation of different choices available to the subsistence farmer. Also relevant to this study is the work of Smith (1970) who has developed a linear programming model for Nigeria in which the combination of agricultural production activities to provide nutrients at least cost are determined.

It appears, then, that the method of linear programming is an extremely useful tool in that it can accommodate many different types of units in a single program; e.g., labor hours, acres of land, various cropping activities, pounds of produce, units of nutrients, etc. There are problems, however. It is necessary to be able to express relationships as linear (unless one is proficient in the use of more complex quadratic programming), and to express the objective function in common units. One must also recognize the fallibility of the assumptions that one builds into the program. For example, levels of

restraints that are used usually require value judgments or, as in this study, the decision to use typical or average values for household size and farm production figures may affect the results.

Statement of Hypotheses

Certain aspects of the theoretical perspectives which have been discussed have been used to formulate and test the following hypotheses.

(1) It is hypothesized that the traditional diets and farm technology represent a viable adaptation to scarce resources (especially of land) but that these resources are inadequate to supply recommended levels of food nutrients for all members of the subsistence farming household. Seasonal shortages of food crops occur for several months before harvest and it is hypothesized that diets during this period are especially deficient in certain nutrients.

(2) It is hypothesized that such a low level of resources results in a self-sustaining "poverty trap." One of the most important requirements for agricultural development to take place is the capacity of the farmer to take risks. If the farmer grows crops in an amount which is barely adequate for survival, the environment for innovation adoption is much less favorable than if a surplus can be produced. Low productivity and a lack of adequate alternative economic opportunities restrict these farmers to their present circumstances under present conditions.

FIELD RESEARCH

The Area and People

Honduras is divided into eighteen political departments or districts, each headed by a governor responsible to the president. These departments are subdivided into municipios (similar to counties) which incorporate towns and villages. The people of Honduras, as in most of Latin America, form a sharply demarcated stratified society with a small elite of land and property owners who constitute about 1 to 2% of the people, a small middle class (15%) and a large number of laborers, campesinos (peasant farmers and farm workers). Unlike neighboring Guatemala where Indian groups have retained local customs, dress, and language, the people of Honduras have merged into a more homogeneous ethnicity with Spanish and Indian traits and the universal use of the Spanish language. Western clothes are worn; in the countryside, women wear simply cut dresses, usually of polyester, often with an apron. Men wear cotton shirts, work trousers and straw hats with a rancher-style creased crown. Footwear seems inadequate--women wearing plastic scuffs if not barefoot, men wearing work shoes, sometimes of rubber or plastic molded in one piece with mock laces and tongues to resemble leather shoes. Men, women and children go barefoot much of the time. Men's hair styles are short and similar to those in the United States. Unmarried girls usually have shoulder

length hair worn in a loose fashion, married women wear their hair long and pinned up.

In the southern district of Choluteca where the Choluteca River plain cuts through a valley of fertile alluvium, mountains as high as 3,000 feet border the valley. Vegetation consists of deciduous tropical forest and savanna. Annual rainfall is between 60 to 80 inches with very definite wet and dry seasons; little or no rain falls between the months of December to April. Mean annual temperatures are between 79 to 82 degrees Fahrenheit.

In this southern province, farms range from large commercial sugar cane plantations or cattle ranches made up of thousands of acres to the smallest minifundia. On the latter, farmers strive to simply provide enough food for their families. Official records are somewhat incomplete concerning production on these small farms since much of the produce does not enter the market.

In southern Honduras, grain sorghum is an important crop. It is grown primarily for human consumption by farmers with small holdings. Almost all of the sorghum used for food is eaten in the form of tortillas. Maize is generally preferred to sorghum for making tortillas, but sorghum produces better and is a more reliable crop in that area.

The Localities Studied

For the present study, three locations where sorghum is grown for food were chosen. Two of these, El Corpus and Guajiniquil, were in mountainous areas. The other, Pavana, was on the lowland plains (see map, Figure 2). El Corpus, a village of approximately 1,300

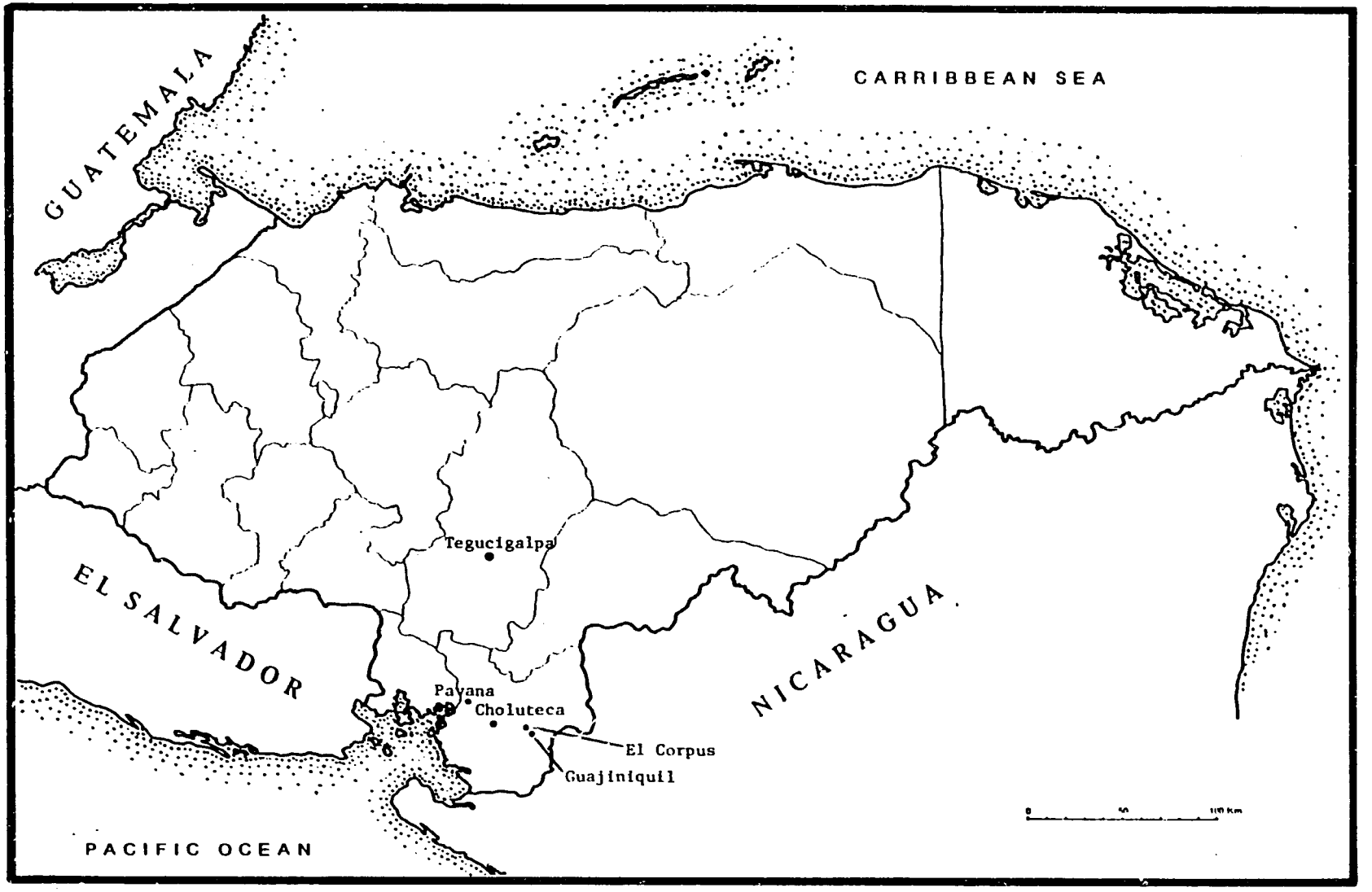

Figure 2. Map of Honduras.

persons, is located about 10.5 miles east of the city of Choluteca. This picturesque village of hills and cobblestone streets is relatively progressive with regular bus service (three times daily) to and from Choluteca. It is a well organized village with a city hall and alcalde (mayor), electricity, a central water supply, two dry goods stores, numerous small pulperias (shops), a small molino (mill) where maize and sorghum are ground for the daily needs of each household, a Baptist mission church as well as a large Catholic church, a health center, a feeding center for young children, and a school system employing a full-time school superintendent.[1]

Guajiniquil is a settlement of indeterminate size higher in the mountains about two miles southeast of El Corpus. It consists of several small clusters of houses and scattered homes dispersed along the road for approximately a mile. Buses to El Corpus continue to Guajiniquil and beyond twice daily. There is a small pulperia and a children's feeding center. Children who attend school go to El Corpus, generally on foot. The informal head of the community appears to be the Catholic lay leader who is consulted on many matters. He is also the leading farmer in the area.

In Pavana, a hamlet on the plains, the climate is less benevolent than in the mountains. In this area, which is at sea level, it is hotter with more insects and many persons suffer from malaria. Pavana lies within a mile of the main highway from Choluteca to the capital,

---

[1]The school superintendent headquartered in El Corpus is responsible for an entire school district which includes other small settlements.

Tegucigalpa. It consists of approximately 60 houses scattered along a dusty unpaved main road for about three-fourths of a mile and one-fourth of a mile on both sides of the road. There are frequent buses along the main highway but only one each day comes all the way into the settlement. Pavana has a central water system that pipes water into each neighborhood and about half of the homes have a faucet in the yard. There is no city hall and no electricity. Pavana has a school, a health center, a Catholic church, a seldomly used Baptist mission, and a telegraph line that provides communication to the city.

In all of these three locations, the people keep up to date concerning political events in their country by listening to their radios and they identify with the various political parties and campesino organizations. Political sympathy is conditioned by practical considerations and by hopes that one or another political party or government organization will actually bring improvements in their impoverished lives. Religion appears to be a divisive force; some Catholic believers are bitterly opposed to the "Evangelicals" or Protestant converts that make up about a third of the population in these areas. This does not entirely rule out cooperation between members of different faiths in work groups but does foster an element of distrust, particularly of strangers.

The population chosen for study was that of the subsistence farmers who regularly grow sorghum for food. In the locations chosen, it was found that these were also the farmers with the least resources, especially the amount of land to farm. The farms were very

small, ranging from .5 to 5 manzanas[1] (about .9 to 8.5 acres). In El Corpus and Pavana, cooperative farming enterprises assigned plots of from 1 to 2 manzanas to each household.

Farming Technology

Two different technological systems were encountered. The farming techniques used were dictated by the terrain but both systems were primitive. In the mountains, farmers were using only a planting stick and a machete as they have done for generations. The planting stick, locally called a chuzo, is a long pole with a blade set into the end. Because cultivable land is scarce, very little land or crop rotation is practiced and crops are usually planted on permanent fields. Land is prepared by cutting brush and weeds that have grown since the previous season and sometimes burned when dry. Burning is presently being discontinued, however, on the advice of governmental agricultural experts in an effort to halt serious soil erosion.

Several methods of seeding are practiced. Maize is planted first in a diagonal pattern by dropping seeds in a hole made with a planting stick. When the maize is a few inches high, sorghum is planted between the maize plants. Beans are planted amongst the maize and sorghum. Sometimes sorghum and maize are planted together in the same hole. Occasionally, sorghum seeds are simply broadcast on the ground. Cutting weeds or cultivating is done using a machete. Herbicides may be used to control weeds if the farmer is working a

---

[1] 1 manzana = 1.7 acres or .7 hectare.

considerable amount of land and can afford it. He must, of course, be able to forego his bean crop. Fertilizer and field insecticides are not used, both being unaffordable. In the areas visited, sorghum was an important crop because neither maize nor beans produced high yields. In El Corpus, but not Guajiniquil, some of the farmers were organized into a liga (cooperative league).

In the lowlands around Pavana, the level terrain permits the use of oxen and plow. Wooden steel-tipped plows, carved from large pieces of timber, are used for planting. Only a few farmers own teams and they are hired to do this work. Sorghum and corn are interplanted without beans. Because both insects and weeds are worse here, few people grow beans. And, because fertilizer is not used and legumes are not grown, soil fertility is low. There are two ligas in Pavana. One of these, the Esperanza de Pavana was doing well at the time of the field study, partly due to the additional technical and food assistance being provided by German sponsors and partly due to a spirit of enthusiasm and cooperation which fostered hard work. The second cooperative, the Central de Pavana, was experiencing almost total crop failure and did not have the resources to replant the sorghum crop which was necessary. This cooperative had previously had assistance from government sources but was not being aided at this time. Members were dispirited and work was ineffective. Both groups were cropping land that had been in pasture until a few years previously. The Esperanza land had been cultivated for two years and still retained a measure of fertility but the Central farm land had been continuously cropped for five years and soil fertility had become greatly diminished.

Life Style

The life style of these small farmers is characterized by a meagreness of material possession. The houses they occupy are built of adobe or of poles or boards with intersticed dried mud or of poles only. Roofs are usually of baked clay tiles or, less common, of thatch. The houses have earth floors, usually only one room and one or two small square windows. Kitchen areas are found on one wall of the house or in a separate lean-to structure. The main room is often divided into separate areas by a partition made of slats and cardboard which is often "papered" with pages of old magazines, newspapers or even grain sacks. Furniture is scarce. There are usually one or two wooden folding chairs; there may be a crudely built wooden table and a bench and a wooden bed with a twine platform on which straw mats are laid. Every house has one or two hammocks which are used for sleeping, resting during the day, or lulling a fretful baby. Food is prepared at a roughly constructed work counter. A large tin or clay olla (pot) of water is at hand. Cooking utensils are few, consisting of one or two clay or aluminum pots, several plastic containers and baskets, a grinding stone and a clay or iron comal (a slightly rounded pan) for cooking tortillas on the raised hearth stove which was constructed of dried mud.

The predominant family grouping is the nuclear family, although it is common to find young single women with babies continuing to live with their parents and extended families are also quite common. Marital alliances are usually extra-legal; that is, few couples have

had religious or civil ceremonies. Nevertheless, such alliances are fairly stable, the cooperation of both man and woman being essential for survival. For this society, the basic unit of production and consumption is the household.

Data Collection

Data collection in a setting such as that encountered in Honduras presents special problems. Rogers states that it is folly to consider studying a similar problem in a less developed country with the same research methods used in a more developed country. He further notes that one cannot assume that a random sample of respondents will willingly provide accurate responses to structured questions in field interviews (Rogers, 1969a, p. 367). Further, in most cases, the lack of a sampling frame such as a list of names or an adequate area map often preclude the use of probability samples (ibid., p. 368).

The problem of gaining the cooperation of members of a traditional society is a serious one and may take many months to overcome. Often, serious misunderstandings of meanings and purposes are encountered in cross-cultural studies, making it necessary to use a variety of data collection methods to obtain useful information.

Clayton discusses the usefulness of the case study approach in the study of subsistence farming systems where the organization of a single or a small number of farms is subject to close scrutiny (Clayton, 1964, p. 80). The farms are selected as being representative of a given type or area. He notes that in such a study it is essential

that holdings selected for case study are unequivocably representative of typical or commonly-found farm situations.

For the research in Honduras, a combination of methods was used to obtain the desired information. Before the field trip was undertaken, a comprehensive questionnaire dealing with general sociological variables, aspects of agricultural activities, food habits and food attitudes deemed most relevant to sorghum growing and use was constructed in English. This questionnaire was translated into Spanish by a native Spanish-speaker. Cross-cultural conceptual problems and interpretations were dealt with by conferring with a number of persons experienced in Latin American sociological field work. A copy of both the English and the Spanish questionnaires are attached as Appendix A. In the field, the questionnaire was used as a guide to define the organization and scope of the information desired rather than as a formal survey instrument. Sufficient leeway was permitted the researchers so that they could fit particular questions to circumstances and individual respondents. In addition to interviews in which the questionnaire was used, participant observation and lengthy informal discussions furnished supplementary data and permitted a check on the information collected with the questionnaire. The methods used were similar to those frequently used by anthropologists.

For each of the three localities, the researchers traveled the roads that went from the center of each village and attempted to interview each farming household they came to. Persons contacted were selected on the basis of accessibility and willingness to cooperate. Data was collected from a total of 43 households, 14 in El Corpus,

10 in Guajiniquil, and 19 in Pavana. It was decided that, rather than attempt to contact a large number of households, it would be preferable to intensively study a smaller number of families. Efforts were directed toward those families known to be farming and growing sorghum. Owing to the tactics used, people were generally friendly and cooperative and the desired information was obtained. It was not possible to obtain a probability sample because of the unavailability of reliable census lists or detailed area maps. It is held, however, that the households contacted were typical of the population of interest.

DESCRIPTIVE DATA

The social and economic background for the nutritional situation of the Honduran families who use grain sorghum for food is provided by the descriptive data obtained during the field study. The relational diagram presented earlier (Figure 1) shows how selected variables are interrelated in the production of the household food supply. The following discussion of these variables will follow, insofar as possible, the logical sequence of the diagram.

Persons Interviewed

Thirty-four of the 43 households contacted relied primarily on the crops they produced for their livelihood. The other 9 maintained a similar level of lifestyle but depended on such work as farm labor, employment in small gold mines or odd jobs. The remainder of the report will deal with the farming households since the main area of interest is subsistence food production.

From these 34 farm households, 25 men and 30 women, a total of 55 respondents, were interviewed in depth. Those interviewed were male head of house (24); spouse of male head (25); female head of house (2); adult son of female head (1); adult daughter or other adult female (3).

The ages of the males interviewed ranged from 26 to 74 years, with an average age of 43.2; for the females, the range was 22 tc 60 years with an average age of 37.2 years.

The predominant family grouping was the simple nuclear family but other forms were present. Other forms were the extended family with two generations living together; families with unmarried grown daughters and their children; and, families with nieces, nephews, grandchildren or other persons living in the house. The nuclear family represented 65.5% of the households, the extended family represented 8%, and other types represented 26.5% of the total.

Household Size

The primary unit of production and consumption is the household. Family ties are strong but there is evidence that household size is limited to some extent by the available food supply. It is quite common for children to live with grandparents or uncles and aunts when their own families are unable to support all the children. For the families studied, household size ranged from 3 to 13 persons, with a mean of 6.9 persons; the mode was 5. This distribution is shown in Table 1.

In order to determine nutritional requirements, it was necessary to establish the composition of the typical family. Mean frequencies of age-sex categories were computed, Table 2. (The average total number of persons when calculated in this way is 7.0 rather than the figure of 6.9 previously noted.) The categories used were taken from the FAO tables of recommended nutrient intakes (FAO, 1973).

Table 1. Household Size of Subsistence Farmers

No. Persons in House	Frequency	%
3	2	5.9
4	1	2.9
5	10	29.4
6	5	14.7
7	4	11.8
8	4	11.8
9	1	2.9
10	3	8.8
11	3	8.8
13	1	2.9

Access to Land

There was considerable variation in the farmers' access to land, ranging from .5 to 5 manzanas with an average of 1.9 manzanas for all the farmers. Farm size is generally greater in the lowland area and this will be discussed further in a later consideration of the different farming environments and technologies. From the data available, there was no obvious relationship between household size and size of farms as is shown by Table 3.

Table 2. Age-Sex Composition of Average Household

Age Group	Number in Household[1]
Adult Male Head (avg. age = 43.2)	1
Adult Head Female (avg. age = 37.2)	1
< 1 Infants	.4
1-3 Children	.8
4-6 Children	.8
7-9 Children	.7
10-12 Male Adolescents	.3
13-15 Male Adolescents	.3
16-19 Male Adolescents	.3
≥ 20 Male, Other than Head	.4
10-12 Female Adolescents	.2
13-15 Female Adolescents	.2
16-19 Female Adolescents	.3
≥ 20 Female, Other than Head Female	.3
Total	7.0

[1]Rounded to the nearest tenth.

Table 3. Size of Farms and Households

Farm Size (mzs.)	Range of Household Size (No. Persons)
.5	7
1.0	3-8
1.3	9
1.5	6
2.0	3-13
3.0	6
3.5	5
5.0	5

As is shown by the table, larger households of 11 and 13 persons all had only 2.0 manzanas; a family of 7 persons lived on the farm consisting of .5 mz.; the household size of families with only 1.0 mzs. ranged from 3 to 8 persons; and the largest farm of 5.0 mzs. was occupied by a family of 5 persons.

Cultural Roles

Based on information given by informants and by observation, based on the nature of answers given in response to questionnaire items, it seems that farming is a male occupation. One exception encountered was a widow whose young adult sons did most of the field

work under her direction. She also made all decisions relating to farming matters. In the other female-headed household, both mother and son were older and the son was responsible for all farming work and decisions. Both women considered other tasks as their most important occupations. The first said that cooking was hers; the latter, making reed mats for sale.

To the questions, "What is your most important occupation?" and "What is your second most important occupation?", responses from women indicated they were involved in traditional homemaking activities, Table 4.

Table 4. Women's Occupations

Most Important Occupation	% Giving Answer	Second Most Important	% Giving Answer
Cooking (Includes Grinding Grain)	52.0	Making Food for Sale	12.5
Housework	40.0	Washing Clothes (& Ironing)	68.8
Commercial Activity	8.0	Getting Water	12.5
		Tending Children	6.3

Cooking activities occupy a large part of a woman's day. This is understandable since preparing grain and cooking tortillas can take several hours each day. For making tortillas, sorghum or maize (or a mixture of the two) is steeped in water to which lime or wood ashes have been added. The mixture is heated to about 80 degrees C.

for from 15 to 45 minutes, depending on the amount and composition of the mixture; maize is steeped longer. The mixture is then allowed to stand until the next day. The nixtamal (soaked grain) is then thoroughly washed with water and is ground either on a stone or by a commercial mill into a fine masa (ground nixtamal). In El Corpus, there was an electric-powered mill to which most of the women carried their grain, and, in Pavana, there was a gasoline-powered mill. Guajiniquil, however, had no mill and the women had to use hand grinders or arduously grind all grain by hand on a stone. Whatever method of grinding was used, however, each portion of the masa was finely ground again on a stone before shaping each tortilla. Although the mills in the villages reduce the time of grain preparation, cooking remains a time-consuming task since a woman must walk to the village mill which is often at a considerable distance.

Carrying water is also a time-consuming task for the woman of the household. In El Corpus, there was a central water supply, and the farm women who lived near enough were able to carry the household water from one of several village taps. Many of them, however, preferred nearby springs and streams. In Guajiniquil, all households used water from the plentiful streams that coursed down the hills. Pavana also had a central water supply and many households had a tap in their yards. Others could obtain water from a nearby neighbor.

Nine of the women interviewed (37.5%) engaged in some form of commercial activity. Eight of them made food for sale in the neighborhood or at the market, and one wove reed mats of the kind used on beds. The kinds of foods made for sale were tortillas, tamales,

sweet breads, and rosquitos. Rosquitos are doughnut-shaped cookies which are made from wheat, maize, or sorghum.

Some of the women helped in the fields, although it was apparent from the responses to such questions that this type of work was not considered entirely appropriate. Table 5 summarizes the extent of such activities.

Table 5. Women's Field Work Activities

Activity	% Response
Does not help in fields	66.7
Works in fields	18.5
Carries things	3.7
Takes food	11.1

The care of small animals such as chickens, ducks, and pigs was the responsibility of the woman of the household, although they were the property of the family and not hers alone. Men took care of large animals such as oxen, cows, calves, and donkeys. Among the respondents, only three families possessed any of these large animals. Goats were occasionally seen in the areas visited but none were owned by the farmers contacted.

Children assisted parents in relatively minor ways. Questions concerning how children helped elicited comments to the effect that children did not help, that it was not necessary for them to help.

Nevertheless, it was observed that both boys and girls as young as four or five years of age spent considerable time helping care for younger siblings. Little girls as young as five or six were sometimes sent to the molino or pulperia by their mothers. Girls also helped fetch water in small jugs. Small boys did not usually help in the fields until about twelve years of age; when boys reached the age of about sixteen, they typically began to work in the fields on a regular basis.

Information from informants indicated that children were not thought of as making substantial economic contributions to households. Although many of the children did not attend school, it was felt that this was a desired goal and that going to school precluded helping with work at home.

Men, in addition to farming work, were responsible for carrying home firewood which often had to be brought from a considerable distance. The wood was carried in huge bundles on a man's back.

Information concerning seasonal outside employment for men was not obtained. Many of the farmers work on nearby sugar cane plantations during the harvest or take other laboring jobs during the dry season when little farming work is done. These activities remain to be documented during subsequent field research.

Labor Input

Cropping systems research usually attempts to determine the total labor input for each farming activity. This should include

labor input for each crop production task as well as care of livestock. Expenditure in the processing and preparation of food would also need to be included in a more rigorous study of systemic energy flow. However, all labor input figures are not available. In this study, labor units based on man-labor units per household are included. The relative contribution of women and boys has been estimated for each household. In general, adolescent males were rated at .5 man-labor units and women's help somewhat less depending on the tasks involved. The frequencies of these estimates are given in Table 6. The average value is 1.6 man-labor units per household.

Table 6. Frequencies of Man-Labor Units per Household[1]

No. Units	Freq.	%
1.0	11	36.7
1.2	1	3.3
1.3	1	3.3
1.5	9	30.0
2.0	2	6.7
2.5	3	10.0
3.0	1	3.3
3.5	2	6.7

[1]N=30; missing, 4 households.

Norman (1979) notes that the average hours worked per day in tropical cropping systems is often surprisingly low. He states that it is realistic to expect male adults to work not much more than 5 hours a day and a total of 1,200 hours or about 230 days a year.[1] Much time and energy is expended in walking to and from the fields. He also points out that the seasonality of crop harvest may also influence work output where food scarcity may seriously impede work capacity. This is applicable to the population under consideration here since there is an acute shortage of food at planting time when the requirements for energy expenditure are high.

Labor was seldom hired. Only four farmers said that they occasionally hired additional help for field work and this was usually during the harvest season. The wages they paid were 3.50 Lempiras[2] per day. Honduras has a wage law which sets the minimum amounts paid for different types of labor including farm wages.[3] Larger farms employing more laborers are required to pay higher wages than the smaller farms but the 3.50 Lempiras quoted by these farmers is below the amount set by the government.

---

[1]Applying this to our Honduran sample for the eight-month farming season: 8 x 30 = 240 days; at five hours per day, a total of 1,200 hours would be spent at work.

[2]2 Lempiras = 1 U.S. Dollar.

[3]Table 24 presents the minimum wages for various types of labor.

Diets

Staple items in the diets of these farmers are maize, sorghum and beans. Sorghum and maize are consumed almost entirely in the form of tortillas. The field research took place during the planting season when the food supply is at its lowest; maize supplies were exhausted and many households were dependent on small remaining stores of sorghum. The daily diets which were documented reflect this deprivation. These diets are qualitatively grouped into five types, Table 7. On first observation, all of these diets would seem to be nutritionally poor.

Table 7. Daily Diets During Season of Food Shortage

Type	Food Items	% of Persons Subsisting On This Type of Diet
1	Tortillas Only (Generally Eaten with Salt)	7.5
2	Tortillas and Beans	50.9
3	Tortillas, Beans and Rice	17.0
4	Tortillas, Beans, Rice Plus Some Eggs, Cheese, Milk, or Small Amount of Meat	20.8
5	Tortillas, Beans, Rice Plus Small Amount of Fresh Vegetables Such As Tomatoes or Cabbage	3.8

One of the advantages to cooperative membership was the supplemental food rations provided by cooperative sponsors. Not all leagues were furnished this food; the Central de Pavana group was not receiving this assistance at the time of the survey, but both the cooperative at El Corpus and the Esperanza de Pavana were. Conflicting information makes it difficult to provide accurate data on the quantities received, but a comparison of the diet levels of those receiving and not receiving aid is helpful, Table 8.

Table 8. Diets and Supplementary Food Assistance.

	Type of Diet (Percentage of Total Group)				
	1	2	3	4	5
Persons Not Receiving Assistance	7.5	22.6	12.8	15.6	3.8
Persons Receiving Assistance	0	28.3	4.2	5.2	0
T =	7.5	50.9	17.0	20.8	3.8

From this table, it does not appear that those who received the food rations had a substantially better quality diet than those who did not. Another indicator of the impact on the diet is the kind of tortillas being eaten since beans, maize and rice were the commodities being furnished. This is shown in Table 9.

Table 9. Supplementary Food Assistance and Kind of Tortillas Eaten.

	Kind of Tortillas (Percentage of Total Group)		
	Sorghum	Maize	Mixed Sorghum & Maize
Persons Not Receiving Assistance	41.5	10.4	10.4
Persons Receiving Assistance	8.1	16.2	13.4

As this table shows, and as might be expected, those persons receiving supplemental supplies of maize were eating more maize and mixed tortillas. That the difference in diet quality and types of tortillas is not greater may be attributed to the fact that inadequate quantities of food are being supplied. Informants stated that these supplies were given out twice a month and that they usually lasted less than a week each time.

Gardens and Orchards

The presence or absence of gardens and orchards for each household was noted during the survey. Only five families had small plots of field peas near their homes and only six had fruit orchards. Four of these six had only a few mango or banana trees, one had a banana orchard of about one-eighth of a *manzana* and one had an orchard of one-fourth *manzana* with some surplus. Varieties grown in the

latter were mangoes, bananas, cashews, avocados, and yucca.

The cooperatives were also producing small amounts of food other than grains. The cooperative in El Corpus had a small patch of yucca and cashew trees were planted throughout the fields. One of the cooperatives in Pavana had a small plot of yucca.

It was apparent that the small amounts of such produce, both individually and cooperatively grown, were insufficient to supplement the diets in an appreciable way. One exception, perhaps, are the mango trees which are plentiful in all areas, growing near houses or along the sides of the village streets. These were not considered as important dietary items, but children habitually picked up and ate this fruit which is a valuable source of Vitamin A and ascorbic acid. It was not possible to measure the contribution of this type of intake to the diets at the time of the study, but the analysis which will be discussed later points out the need for additional sources of both of these nutrients, Vitamin A and ascorbic acid.

Animals and Animal Products

As was noted earlier, most of the households kept a few chickens and a pig or two. The major contribution to the regular diets were eggs. Chickens were eaten only when there were important guests or, occasionally, by someone who was ill. Pigs were only raised to be sold when money was needed for emergencies. All of the families contacted said that they did not eat the pigs they raised. None of the families owned milk cows.

The number of animals owned varied from a few chickens to the ownership of oxen, calves and many chickens, ducks, and turkeys, Table 10.

Table 10. Ownership of Animals

Level of Ownership	Frequency	%
1 Relatively well-off, with numerous chickens, pigs, ducks or turkeys, oxen or calves	2	6
2 1-3 pigs, 2-20 chickens, 1 donkey	1	3
3 1-3 pigs, many chickens (20+)	1	3
4 1-3 pigs, 2-20 chickens	12	40
5 Many chickens only (20+)	6	20
6 A few chickens only	8	27

N=30, 4 missing.

As this table shows, the most common pattern of ownership was that of one to three pigs and a number of chickens. Farmers keeping more animals were generally better off with more land and other

resources. The one farmer who owned oxen did custom plowing and was the only farmer who grew rice which he sold.

Other Food Sources

Farmers were also questioned concerning hunting and fishing activities. Four said that they or a family member went occasionally and four went fairly often. However, after further questioning, it was determined that these activities contribute neither regularly nor appreciably to the household food supply.

Crop Production

The major part of the food supply of this population comes from the grains and beans that the farmers are able to produce.

Crops are usually grown in combinations in the areas of study. Multiple cropping can be used to refer to different types of cropping patterns where more than one crop a year is grown on the same plot of ground. Of major interest to our study are interplanting (where two crops are grown on the same plot and at the same time for part of the plant cycle) and intercropping (where two crops are grown on the same plot simultaneously). These definitions are those used by Norman (1974). Although data concerning spacing, genetic varieties, labor input and soil fertility were not obtained in detail at the time in the localities of study, it was established that intercropping and interplanting cropping patterns predominate and that very little mono cropping is practiced.

The two different farming environments, mountainous terrain and flat lowland, dictate the type of technological system used. In the mountain villages, El Corpus and Guajiniquil, farming is done with machete and chuzo (a planting stick). In the low areas at Pavana, oxen are used for plowing during planting and the machete is used for all other tasks such as clearing, cutting weeds, harvesting, etc.

Sorghum is usually grown with maize or with maize and beans. Although sorghum grows better than maize in these areas and is a more reliable crop, farmers give primary effort to the maize crop. Maize is planted twice a year, in late May or early June and in September and is harvested in August and December.

Only one crop a year of sorghum is grown. Farmers feel that it is important to plant corn on a fixed schedule but that the grain sorghum can be planted any time from late May to late July, often being replanted three or four times "until it takes." The native varieties of sorghum grown for food are of the tall long-season type. Sorghum is harvested in late December through January. Beans are more successfully grown in the mountains than they are in the Pavana area because of greater insect problems in the latter.

In the uplands, where the machete and planting stick culture is practiced, land clearing, cultivating, and harvesting are done by hand with a machete. The planting stick is a long pole with a flat blade about six inches long set into the end. Land is cleared with a machete and the ground is left rough but no land ridging or leveling is practiced. Formerly, it was customary to burn the debris on the fields after cutting but recently government agricultural experts

have advised against burning, presumably in an effort to control erosion. Maize is planted first and when the maize is a few inches high, sorghum is planted between the maize plants. Beans are planted amongst the maize and sorghum. At harvest, the sorghum heads are cut using a machete and the grain is threshed on a platform of logs or a flat place in the field where it is beaten with boards.

In the lowland area of Pavana, the machete is also used to clear the land, but plowing is done with oxen and wooden steel-tipped plow. Seed is dropped into the furrows by hand, and the peasant uses his foot to cover up the seed. There are three different patterns of planting maize and sorghum together: (1) alternate rows of maize and sorghum; (2) alternate plants of maize and sorghum in the same row; and, (3) maize and sorghum planted in the same hole. Cultivating is done by hand with the machete and harvesting and threshing is done the same way it is done in the mountains.

Average annual yields for the crops produced under each of the most common systems of farming, that is the three-crop maize, sorghum and beans; the two-crop sorghum and maize; and, the mono crop of sorghum differ, Table 11. The value of the products were also calculated. Values were based on the per pound market value of purchasing these items rather on the market sale value of larger quantities at harvest time, because this production replaced the amount of food that would have to be purchased.

Table 11 shows the average differences which were found between the three-crop upland planting stick system and the two-crop lowland system using oxen and wooden plow. As shown by the table, the higher

Table 11. Annual Average Yields and Value of Products

Cropping System	Crop	Average Yield (lbs./mz.)	Cost per Pound if Purchased (U.S. $)	Value per Manzana (U.S. $)	Value per Manzana (1000 Calories)
Intercropping Maize, Sorghum and Beans	Sorghum	1800	.08	144	2802.6
	Maize (2 crops/year, both crops)	1300	.12	156	2101.8
(Average size of farm = 1.1 mz.)	Beans	240	.50	120	371.5
	Total value of products per manzana			420	5275.9
	Total value for average farm (1.1 mz.)			462	5803.5
Intercropping sorghum and maize	Sorghum	2260	.08	181	3518.8
	Maize (both crops)	1120	.12	134	1809.9
(Average size of farm = 1.8 mz.)	Total value of products per manzana			315	5328.7
	Total value for average farm			567	9591.7
Sorghum grown as sole crop		1860	.08	149	2896.0
(Average size of plot = 1.2 mz.)	Total for 1.2 mz.			179	3475.2

Table 11. (Continued)

Cropping System	Crop	Average Yield (lbs./mz.)	Cost per Pound if Purchased (U.S. $)	Value per Manzana (U.S. $)	Value per Manzana (1000 Calories)
Beans grown as sole crop		324	.50	162	501.6
(Size of plot = .5 mz.)	Total for .5 mz.			81	250.8
Maize grown as sole crop		1340	.12	161	2165.4
(Size of plot = .5 mz.)	Total for .5 mz.			80	1082.7

average yield of sorghum grown with maize is offset by the lower yields of the maize resulting in a lower value per manzana for the crops compared with that for the three-crop system. However, where the three crops are grown, the farmer typically has access to less land (an average of 1.1 manzanas) and thus produces the equivalent of a total of $462, whereas the farmer of the lowlands using a plow normally has access to more land (an average of 1.8 manzanas) and thus is able to grown crops valued at $567 with less labor.

As the data given for the sole cropping of sorghum show, the practice of growing this crop by itself is not an economical practice. There were seven farmers who grew sorghum alone, five of these with planting stick, two with oxen. Plots ranged from .5 to 2.0 manzanas with an average of 1.2 mz. Only four of these farmers said that they ever sold any of this.

Only one instance of beans grown alone was recorded. This plot was one-half manzana in size and yielded 162 pounds (value = $81.00). There was also only one instance of maize being grown alone with a yield of 670 pounds for one-half manzana (worth $80.40).

Clearly, intercropping is preferred and with present levels of technology yield a much higher return both in terms of monetary value and subsistence. The yield values given in Table 11 are used in the evaluations which are presented in the following chapter.

Sorghum Storage

Sorghum was usually stored for several months, sometimes nearly one year. Most of the farmers stored the grain inside their houses. Many households had large wooden bins into which they put their sacks of grain but the preferred method of storage was the use of 55-gallon iron drums if the farmer could afford them. These barrils (barrels), as they were called, were considered expensive by the farmers, costing the equivalent of $17.50 each. Some were rented when they could not be purchased. Other storage methods were to place the sacks of grain on wooden pallets or to use large hollowed-out tree trunks. In the group studied, 44% were using the iron drums. Almost all of the farmers reported using fumigant pellets of the phostoxin type (aluminum phosphate) in the stored grain. In spite of this, storage losses to insects were considerable. It was not possible to obtain quantitative data concerning these losses at the time of the study.

Attitudinal Variables

Most of the farmers contacted (and their spouses) were illiterate. However, most households had radios and the people kept abreast of events in their country. They were most interested in the activities of the various campesino organizations or unions and the political news related to these activities. There was also an awareness of the advantages of better agricultural practices, such as the use of fertilizer, herbicides, and insecticides, but these products were

beyond the farmers' means. Only two of the farmers contacted used herbicide and this was only on small parts of their land. Only one relatively wealthy farmer regularly used fertilizer. All farmers said that they needed fertilizer and would use it if they could afford it.

Certain attitudes of farmers may be an indication of a willingness to adopt new practices. Inkeles (1974) has used the attitudinal variables "outer-directedness" and "sense of efficacy" as indicators of modern outlook or propensity to change. Although the questions asked in this study were not identical to those of Inkeles, some assessment of similar tendencies is possible. Of particular interest is a comparison of cooperative members with nonmembers regarding the attitude of outer-directedness. The cooperative members were formally organized with a president and a secretary and decisions were supposed to be made by consensus.

Table 12 gives the frequency of responses to the question, "Whom do you talk with about new farming methods?" The possible answers are ranked with respect to an attitude of outer-directedness.

The answer "neighbors" predominated. A tentative conclusion that can be drawn is that a traditional orientation, which would be reflected by more responses of "relatives" and "older person" may not be very prevalent. Ryan and Gross (1943, 1950) emphasize the importance of the influence of neighbors in agricultural innovation adoption in a modern society.

It was of interest to see whether those men belonging to a cooperative might have different attitudes than non-members. A comparison of these distributions is also shown in Table 12. This shows that

Table 12. Communication about New Farming Methods

With Whom Farmer Talks	Frequency of Response (%) All Farmers	Cooperative Members	Non-Members
1 Relatives	5.6	0	5.6
2 Older Person	11.1	0	11.1
3 Neighbors	38.8	27.8	11.1
4 Friends	16.7	0	16.7
5 Other Members of Cooperative	11.1	11.1	0
6 Outside Sources, Agricultural Agents	16.7	16.7	0
T =	100.0	55.6	44.5

cooperative members seem to have more contact with outside sources and that relatives and older persons are not consulted. Traditional tendencies appear in the non-member group.

The question, "Whose farming ideas do you value most?" produced the frequencies shown in Table 13. Again, a ranking has been given to the possible answers.

These distributions appear to indicate a somewhat independent attitude regarding farming practices. Although a majority of the cooperative members appear to be influenced by fellow members, outside sources (agricultural extension agents) do not appear to have much

Table 13. Farming Ideas Valued Most

Whose Ideas Farmer Values Most	Frequency of Response (%)		
	All Farmers	Cooperative Members	Non-Members
1 Self	38.0	17.4	20.6
2 Relatives	4.8	4.8	0
3 Older Person	14.3	0	14.3
4 Neighbors	0	0	0
5 Friends	9.5	4.8	4.8
6 Other Cooperative Members	28.6	28.6	0
7 Outside Sources, Agricultural Agents	4.8	0	4.8

credibility. On an individual level, most farmers contacted appeared eager for technical and material assistance and expressed a desire to cooperate with INTSORMIL personnel. However, comments regarding the advice given by Honduran government agricultural personnel were always negative, expressing the opinions that the experts only helped certain farmers or that what they told the farmers to do never worked.

Both men and women were asked the question which presumably indicated a sense of efficacy. This question was, "What is the main cause of illness in your village?" The answers were assigned to two categories: those that (1) indicated a cause that was felt to be beyond the control of individuals (rain, weather, God's will, etc.) and (2)

those causes which people could reasonably influence (dirty conditions, neglecting to boil water, etc.). Inadequate food and poor nutrition, often given as the main cause of illness, were usually attributed to crop failure which in turn was due to unfavorable weather conditions. Hunger and poverty existed because of God's will. In spite of the prevalence of such an attitude of fatalism, 65% of the answers to the question concerning the main cause of illness fell into the category of conditions that people could do something about. People seemed to have an attitude of efficacy with regard to illness but felt helpless concerning general conditions of poverty.

Food Preferences and Beliefs

The determination of attitudes and beliefs concerning food is important in the assessment of a cultural influence on diets. Questions asked included such items as (1) what foods were best liked, (2) what foods were thought to be best for adults, children, old people and sick persons and, (3) what foods were believed to be harmful to young children or sick persons. The answers indicate that people are familiar with a wide variety of foods and that they seem to have some awareness of nutritionally desirable foods (Table 14).

It will be noted that meat is most often mentioned as the food item best liked and best for adults. Meat is a relatively rare dietary item in the population studied. It is also interesting to note that beans and rice were frequently mentioned in both categories; these are common items. Tortillas are nowhere mentioned. They are, however,

Table 14. Frequency of Responses to Food Attitude Questions

Food Items Best Liked	Freq.	Foods Best for Adults	Freq.	Foods Best for Old People	Freq.	Foods Best for Young Children	Freq.	Foods Good for Sick Persons	Freq.	Foods Bad for Young Children	Freq.	Foods Bad for Sick Persons	Freq.
Meat	15	Meat	25	Soup	11	Milk	26	Maggi Soup[4]	10	Beans	11	Meat	20
Fried Rice	10	Rice	10	Eggs	7	Eggs	12	Milk	8	Vegetables	8	Beans	9
Beans	9	Beans	9	Milk	6	Rice	6	Eggs	7	Meat	6	Oil	3
Cheese/soft cheese	5	Soup[1]	9	Cheese	2	Potatoes	5	Cheese	7	Cabbage	5	Milk	3
Milk	4	Eggs	8	Juices	2	Soup	3	Chicken Soup	4	Avocado[5]	3	Rice	2
Fish	3	Milk	6	Chicken	2	Cheese	3	Rice	4	Animal milk	3	Avocado	2
Chicken	2	Chicken	4	Meat	1	Chicken	2	Soft cheese	3	Fish	2	Vegetables	1
Butter	2	Cheese	3	Cabbage	1	Meat	2	Potatoes	3	Sausages	1	Chilles	1
Vegetables	2	Potatoes	2	Potatoes	1	Liver	2	Vegetables	3	Onions	1	Tomatoes	1
		Vegetables	2	Macaroni	1	Fruit	1	Meat	3	Atole	1		
		Carrots	1	Oatmeal	1	Cornflakes	1	Cinnamon	3	Rice	1		
		Salad[2]	1			Vegetables	1	Soup	2	Mondongo[6] soup	1		
		Chilles	1			Juice	1	Juice	2				
		Macaroni	1			Cocoa	1	Cabbage	1				
						Atole[3]	1	Coke	1				
						Plantain	1	Peppers	1				
						Beans	1	Corn tortillas	1				

[1] Includes vegetable or vegetable and meat soup.
[2] "Salad" can refer to vegetables, carrots, cabbage, and/or chilles.
[3] Atole is a porridge made from maize or sorghum meal.
[4] Maggi soup is a popular packaged bouillion cube that is sold everywhere, even in small out-of-the-way villages.
[5] Avocados were thought to be bad because they are green, other green vegetables were also discriminated against.
[6] Mondongo soup is a very rich soup made with vegetables, tripe, and other offal.

the primary staple and no meal is eaten without them. Presumably, they are well-liked but are taken for granted. The foods considered best for adults show that eggs and milk or cheese are considered important, but there is a notable lack of appreciation for vegetables. Foods best for old and sick persons reflect a concern for easy digestibility; the same is true for foods considered best for young children.

These data indicate that there may be a bias against high protein foods and vegetables in diets preferred for young children. Comments were made during the study that avocadoes and green foods made children sick. In light of the importance of additional sources of Vitamin A and ascorbic acid in cereal-based diets, re-education may be necessary for any substantial improvement in the diets of young children. There seems to be a recognition of the importance of milk, eggs and cheese for children. During the study, it was observed that young children were often given snacks of white cheese on tortillas.

Family Size

Nutrition can be expected to have an effect on child mortality and prenatal losses if dietary intakes are inadequate either in quantity or quality. In the farming households visited, of the 28 women who responded to the question concerning number of children that had died, 18 (64.3%) had had children that died. The number of children who died ranged from 1 to 5 and the total number for the 28 women was 36 children or an average of 1.3 children per woman. Table 15 shows this distribution.

Table 15. Number of Children's Deaths

No. Children per Woman	Frequency
0	10
1	9
2	3
3	4
4	1
5	1
T =	36

Ages of the children at death ranged from birth to nine years. This distribution is shown in Table 16.

Table 16 shows that most deaths of children occurred under one year of age for this group.

Prenatal losses were also documented. Among the 28 women, 8 (28.6%) had lost babies before birth. Of these, 1 woman had lost 2 babies and 7 had each lost 1 child during pregnancy.

Since the data presented here concerning diets deals with foods eaten at a particular season, any comparisons of the diets of the mothers and child mortality and prenatal losses will be tentative and exploratory. Table 17 presents a comparison of mothers' diets and number of children lost.

Table 16. Ages of Children Who Died

Age	No. Died
0 - 10 days	14
11 days - 3 mo.	5
4 mo. - 6 mo.	3
7 mo. - 9 mo.	6
10 mo. - 12 mo.	3
13 mo. - 15 mo.	1
16 mo. - 21 mo.	1
22 mo. - 3 yr.	1
4 yr. - 5 yr.	1
6 yr. - 9 yr.	1
T =	36

These data show no pattern of relationships between type of diet and number of children lost. More comprehensive dietary histories would be needed to make a meaningful assessment.

The high number of neonatal deaths and the high number of prenatal losses is striking. Wilson, et al. (1975, p. 340) cite studies showing that the incidence of miscarriages, stillbirths and deaths of the newborn is higher for poorly nourished mothers. The poor condition of babies whose mothers had poor diets has also been

Table 17. Mothers' Diets and Number of Children Lost

Type of Diet	Frequency No. of Children Died					Total	Rate
	1	2	3	4	5		
1			1			3	3.0
2	5		2			11	1.5
3		2	1	1		11	2.75
4	4				1	9	1.8
5		1				2	2.0
	9	3	4	1	1	36	2.0

documented (ibid., pp. 340-341). The poor condition of such babies has been shown to be related to their small weights (Severinghaus, 1976, p. 284). The figures given in Tables 16 and 17 may be an indication of insufficient nutrition for the mothers, although other factors such as unsanitary conditions and disease may also contribute substantially to these high rates.

NUTRITION EVALUATION

The analysis of the data presented in this section will focus on a limited portion of the information which was collected. The purpose is to evaluate, by means of linear programming,[1] the capability of these small subsistence farms to provide an adequate diet.

Dietary adequacy is commonly evaluated by nutritionists on the basis of daily caloric and essential nutrient intake. The items generally considered most essential are: calories, protein, Vitamin A, thiamin, riboflavine, niacin, ascorbic acid, calcium and iron. Information collected concerning the usual amounts and types of food consumed and their methods of preparation together with anthropomorphic measurements of children make it possible to determine general nutritional status. Although the exact levels of human food requirements are still scientifically uncertain and vary for different climates and activities, FAO/WHO reports are used for this project as the primary sources for energy and nutrient requirements since these statistics make some allowances for variations in requirements for different parts of the world (FAO/WHO, 1973). FAO tables are also used as the basis for the nutrient content of food items in this report (FAO/WHO, 1954).

---

[1] For the following computations, the computer program used was the Functional Mathematical Programming System (FMPS) for the Sperry Univac 1100 Series.

The diets presented earlier (Table 7) consist of food items which do not seem capable of supplying adequate nutrition. The following analysis permits us to quantify the amount of nutrients that the farmer was supplying under the present farming systems, to determine what additional income would be necessary to bring the diets up to recommended standards, and what combinations of the most common food items would meet those standards.

Average Household Requirements

The first step was to calculate the recommended daily and yearly intakes of calories, proteins, and other essential nutrients for the average household of seven persons with the age-sex composition as shown in Table 2. These requirements which were calculated from the values given in the FAO/WHO tables (1973) are shown in Table 18.

Nutrition Efficiency of Cropping Systems

The first linear programming model set up was an effort to determine the most nutritionally effective farming activity. Each crop enterprise was entered as a separate activity. The objective function was defined as the least cost of land necessary to produce the required nutrients. The data format is shown in Appendix C-1. Calorie and nutrient values of the cereals and beans are calculated from those given in FAO tables (1954). For the objective function,

Table 18. Recommended Daily Intakes of Nutrients for Average Family*

Age Group	No.	Energy** (kilo-calories)	Protein (gr.)	Vitamin A (micrograms)	Thiamin (milligrams)
< 1 Infants	.4	436	5.6	120	.12
1-3 Children	.8	10[illegible]8	12.8	200	.40
4-6 Children	.8	1464	16.0	240	.56
7-9 Children	.7	1533	17.5	280	.63
10-12 Males	.3	780	9.0	173	.30
13-15 Males	.3	711	11.1	218	.36
16-19 Males	.3	747	11.4	225	.36
≥ 20 Males	.4	976	14.8	300	.48
10-12 Females	.2	470	5.8	115	.18
13-15 Females	.2	416	6.2	145	.20
16-19 Females	.3	580	9.0	225	.27
≥ 20 Females	.3	552	8.7	225	.27
43.2 Adult Male	1	2318	37.0	750	1.20
37.2 Adult Female	1	1840	29.0	750	.90
Total Persons	7				
Total Daily		13,911	193.9	3965	6.2[illegible]
Total Yearly		5,077,515	70,774	1,447,225	2274

*Computed from Tables, FAO/WHO report, Energy and Protein Requirements, 1973, Rome.

**Ibid., Energy requirements those for people from developing countries (average weight, adult male = 53 kg., adult female = 46 kg.)

Table 18. Continued

Age Group	Riboflavin (milligrams)	Niacin (milligrams)	Ascorbic Acid (milligrams)	Calcium (gr.)	Iron*** (milligrams)
< 1 Infants	.20	2.16	8	.20	4.0
1-3 Children	.64	7.20	16	.32	8.0
4-6 Children	.88	9.68	16	.32	8.0
7-9 Children	.91	10.15	14	.28	7.0
10-12 Males	.48	5.16	6	.18	3.0
13-15 Males	.51	5.73	9	.18	5.4
16-19 Males	.54	6.09	9	.15	2.7
≥ 20 Males	.72	7.92	12	.16	3.6
10-12 Females	.28	3.10	4	.12	2.0
13-15 Females	.30	3.28	6	.12	4.8
16-19 Females	.42	4.56	9	.15	8.4
≥ 20 Females	.39	4.35	9	.12	8.4
43.2 Adult Male	1.80	19.80	30	.40	9.0
37.2 Adult Female	1.30	14.50	30	.40	28.0
Total Persons					
Total Daily	9.37	103.68	178	3.10	102.3
Total Yearly	3420	37,843	64,970	1132	37,339

***Requirements those given for diets based on non-animal foods.

yield figures as given in Table 11 were used to calculate the amount of land needed to produce a pound of the crop.

It was obvious from the yield values that the cropping system with the highest yield of a particular crop would provide the most efficient source of nutrients should that crop enter the solution. However, all cropping activities were used in the initial model. The complete solution, Appendix C-2, shows that 4,597 pounds of sorghum at the yields given for the 2-crop sorghum and 4,770 pounds of beans grown as a sole crop are, nutritionally, the most efficient cropping systems. Table 19 presents this data in simplified form and shows the percentages of nutrients supplied. As is shown, these amounts would provide all the nutrients needed for our average family of seven persons. However, this means that the family would have to consume 12.6 pounds of sorghum and 13.1 pounds of dried beans daily, clearly a totally unrealistic diet. The objective function results in a minimum value of 16.8 manzanas of land (2.0 mz. of sorghum and 14.8 mz. of beans) which also exceeds the land resources by a large amount. The limiting nutrients are Vitamin A and ascorbic acid. Calories, protein and other nutrients are present in excess amounts.

A second program was run for all cropping activities in which Vitamin A and ascorbic acid were allowed to enter as non-restrictive. The solution (Appendix C-3) resulted in an objective function value of 4.3 mz. of land and a single cropping activity, 9,663 pounds of 2-crop sorghum. This would entail the consumption of more than 26 pounds of sorghum per day for the household.

Table 19. Optimum Land Use for Supplying Nutrients

Combination of Cropping Activities	Land Needed (mzs.)	Amount Needed for Complete Nutrition (lbs.) Yearly	Daily
Sorghum (at 2-crop intercropping yields)	2.1	4,597	12.6
Beans (at sole crop yields)	14.8	4,770	13.1

Nutrient	Percentage of Requirements Supplied
Calories	286
Protein	974
Vitamin A	100 (limiting)
Thiamin	890
Riboflavin	205
Niacin	341
Ascorbic Acid	100 (limiting)
Calcium	309
Iron	623

These findings from the first and second programs demonstrate clearly that, although sorghum is a valuable staple food and produces nutrients more efficiently than maize in the geographic area studied, it is not possible to satisfy all nutritional requirements from a diet consisting of sorghum, maize, and beans because of the large quantities that would have to be eaten. When ascorbic acid and Vitamin A are not restrictive, calcium becomes the limiting nutrient.

The 3-crop system (intercropping of sorghum, maize and beans) was selected for use for the remaining linear programming procedures.

Protein Quality

It is also possible to estimate the adequacy of the protein quality of a diet. Since cereal-based diets are frequently unbalanced because of essential amino acid requirements, a linear programming model was designed to determine the optimum combination of maize, sorghum and beans (for the 3-crop system) with respect to protein quality. It was first necessary to establish some estimates of the amino acid requirements for the average family as it is defined here. Essential amino acids as given in the FAO tables (FAO/WHO, 1973) are histidine (for infants), isoleucine, leucine, lycine, methionine plus cystine, phenylalanine plus tyrosine, threonine, tryptophan, and valine. Studies and tables are incomplete for many age groups, data being generally available for infants, school children 10-12 years old and for adults. Even for these groups, requirements are by no means well established.

For example, there is considerable controversy over whether histidine is necessary for other age groups (Wilson, 1975, p. 71). For the purposes of this analysis, children in the 1-3 age group were given the values used for infants; boys and girls between the ages of 4-15 were given the same requirements as the 10-12 year-old school children and requirements for both males and females of 16 and over were listed the same as those for adults. These requirements provide only approximations for use in this study and are not intended to be definitive.

Table 20 presents the amino acid requirements for the household that were calculated and used in the linear programs.

The linear programming model used incorporated total protein requirements as well as the essential amino acid restraints as is shown in Appendix C-4. The objective function was again to minimize land requirements.

The solution is shown in Appendix C-5. Maize does not enter the solution, sorghum enters at 1,086 pounds and beans at 283 pounds or 2.9 and .8 pounds daily. The objective function shows that it would require approximately 1.8 manzanas of land to satisfy amino acid requirements if each crop were grown separately (.6 mz. of sorghum, 1.2 mz. of beans). Because these are intercropped, 1.2 manzanas of land would be sufficient. Limiting proteins are lycine and methionine plus cystine. Table 21 summarizes this information and shows the relative percentages of amino acids supplied.

Table 20. Average Family Essential Amino Acid Requirements*
Grams Needed Daily**

Age Group	No.	Histidine	Isoleucine	Leucine	Lycine	Methionine + Cystine
< 1 Infants	.4	.078	.196	.448	.291	.162
1-3 Children	.8	.178	.448	1.024	.666	.371
4-6 Children	.8	0	.592	.896	1.200	.544
7-9 Children	.7	0	.648	.980	1.313	.595
10-12 Male	.3	0	.333	.504	.675	.306
13-16 Male	.3	0	.411	.622	.833	.377
16-19 Male	.3	0	.205	.285	.251	.274
> 20 Male	.4	0	.266	.370	.326	.355
10-12 Female	.2	0	.215	.325	.435	.197
13-15 Female	.2	0	.229	.347	.465	.211
16-19 Female	.3	0	.162	.225	.198	.216
> 20 Female	.3	0	.157	.218	.191	.209
Adult Male	1	0	.666	.925	.814	.888
Adult Female	1	0	.522	.725	.638	.696
Total Persons	7					
Total amino acids needed daily (gms.)		.256	5.050	7.894	8.296	5.401
Total needed yearly (gms)		93.44	1834.25	2881.31	3028.04	1971.37

*Computed from tables in FAO/WHO report, Energy and Protein Requirements, 1973, Rome: FAO.
**Based on grams protein required by each age group.

Table 20. Continued

Age Group	Phenylalanine + Tyrosine	Threonine	Tryptophan	Valine
< 1 Infants	.053	.246	.048	.263
1-3 Children	.806	.563	.109	.602
4-6 Children	.544	.704	.074	.656
7-9 Children	.595	.770	.081	.718
10-12 Male	.306	.396	.041	.369
13-15 Male	.377	.488	.052	.455
16-19 Male	.285	.148	.074	.205
≥ 20 Male	.370	.192	.096	.266
10-12 Female	.197	.255	.027	.238
13-15 Female	.211	.273	029	.254
16-19 Female	.225	.117	.057	.162
≥ 20 Female	.218	.113	.057	.157
Adult Male	.925	.481	.241	.666
Adult Female	.925	.377	.189	.522
Total Persons				
Total amino acids needed daily (gms.)	5.837	5.123	1.777	5.533
Total needed yearly (gms)	2130.51	1869.90	429.61	2019.55

Table 21. Optimum Land Use for Supplying Essential Amino Acids (Three-Crop System)

Combination of Cropping Activities	Land Needed (mz.)	Amount Needed for Complete Amino Acid Requirements (lbs.)	
		Yearly	Daily
Sorghum	.6*	1,086	2.97
Beans	1.2*	283	.77

Protein	Percentage of Requirements Supplied
Total Protein	110
Histidine	2000
Isoleucine	170
Leucine	303
Lycine	100
Methionine + Cystine	100
Phenylalanine + Tyrosine	277
Threonine	140
Tryptophan	139
Valine	187

*Intercropped, therefore, a total of 1.2 mz. would be required.

Quality of Diet

The second phase of the analysis deals with the nutritional values and monetary costs of the food items which were being eaten at the time of the field research. From the diets given in Table 7, the diet designated as Type 1, consisting of tortillas only is so far below nutritional standards that it will not be considered further.

In the following linear programming models, it was necessary to use an objective function which permitted the inclusion both of foods grown and foods purchased. Even though much of the food is grown by the farmer, the market price reflects the relative value of produce and provides the only reasonable basis for comparisons. Appendix B gives an inventory of the most common food items and the market prices which were current at the time of the research. These values are used in the linear programming matrices.

(1) Type 2 Diet

In addition to maize and/or sorghum used in tortillas and beans, oil for refrying beans is an essential item in this diet and was included in the Type 2 diet matrix. Land was entered at 5 *manzanas* but was nonrestrictive. The model is based on the 3-crop system which intercrops maize, sorghum, and beans.

In this initial run, no food items were forced into the solution and again only sorghum and beans entered the solution in excessive amounts. As in the earlier runs, Vitamin A and ascorbic acid

were the limiting nutrients.

The next step was to allow Vitamin A and ascorbic acid to enter the program as nonrestrictive, and the limiting nutrients became riboflavin and calcium. Activities which entered the solution then became sorghum at 3,668 (10 pounds/day) and beans at 1,128 (3.1 pounds/day) and land at 6.7 manzanas, all figures larger than is practical. Objective function or cost was $654.24.

Repeating the run with Vitamin A, ascorbic acid, riboflavin and calcium all as nonrestrictive produced the solution, Appendix C-6, where calories and lycine become the limiting factors. This solution is of particular interest in that the activities entering are the most economic source of sufficient calories. The food producing activities are 3,257 pounds of sorghum and a negligible quantity of beans (4.4 lbs.) which require 1.8 manzanas of land. Maize and oil do not enter the solution. The daily intake of 8.9 pounds of sorghum is 11% higher than the total of 8 pounds of grain per day normally consumed by a household of the size of our average family. The cost is low, $262.76. From Appendix C-6 it can be seen that 100% of the calorie needs are met; 212% of the protein; 61% of Vitamin A; 226% of thiamin; 65% of riboflavin; 154% of niacin; virtually none of the ascorbic acid; 34% of calcium; and 167% of the iron.

However, a diet consisting of only sorghum is not feasible and it is also necessary to give consideration to cultural dietary preferences and customs. Because maize is preferred to sorghum in

the making of tortillas and refried beans are an important staple, maize, oil, and beans were forced into the solution at modest levels. It was reasoned that the average amount of maize produced per year, 1,430 pounds, the average yield of beans, 264 pounds (less than 3/4 pounds per day), and 50 pounds of oil were reasonable amounts that could be used. All other restraints were left as in the previous model. Appendix C-7 shows this model.

As shown in the solution, Appendix C-8, calories, oil, corn and beans become the limiting activities. Sorghum activity is at 1,385 pounds. Land activity is 2.9 mz., but intercropping reduces this to 1.1 mz. This figure happens to be the average land which is farmed in the 3-crop system in the present situation (see Table 11). Table 22 summarizes the data obtained in the linear programming solution in terms of the percentages of required nutrients which are furnished by this combination of activities.

Because the solution produces results which so nearly coincide with the subsistence activities which were documented in the field work (shown in Table 11), this program is viewed as the Subsistence Model. It is significant that, by relaxing the restrictions on the scarce nutrients (Vitamin A, riboflavin, ascorbic acid, and calcium) calories become limiting, and behavior in the model reflects actual findings concerning farming practices. It becomes apparent that, on the average, farmers have resources just sufficient to produce the calories needed for their households with very little surplus. According to these findings, there could be a small average surplus of

Table 22. Subsistence Activities and Nutritional Adequacy

Activities	Pounds Produced or Bought	Land Used (mz.)	Monetary Value ($)
Intercropping of:			
Sorghum	1,386	.76	110.84
Maize	1,430	1.09	171.60
Beans	264	1.10	132.00
Oil (purchased)	50	0	31.50
	Total	1.10*	445.94

Nutrient	Percentage of Needs Met
Calories	100 (Limiting)
Protein	214
Vitamin A	31 (Deficient)
Thiamin	270
Riboflavin	54 (Deficient)
Niacin	107
Ascorbic Acid	5 (Deficient)
Calcium	33 (Deficient)
Iron	132
Histidine	403
Isoleucine	318
Leucine	627
Lycine	158
Methionine plus cystine	226
Phenylalanine plus tyrosine	569
Threonine	276
Tryptophan	118
Valine	363

*Intercropping total

595 pounds of sorghum which is worth $47.60. This small surplus could be sold to buy other needed items but, most likely, it would be fed to animals. Storage losses should also be considered.

According to this model, cereal consumption would be at 7.7 pounds per day, very close to the 8-pound figure given by informants. This subsistence diet is sadly deficient in Vitamin A, riboflavin, ascorbic acid and calcium. As is shown in Table 22, approximately only 31% of the calcium requirements are supplied. Some of the calcium deficiency may be offset by the practice of steeping the maize or sorghum in lime water before the grain is ground and made into tortillas. Cravioto, et al., in a discussion of the nutritive value of the Mexican tortilla state that tortillas have a high calcium content, "The Mexican has achieved an adequate calcium intake by this food practice, for an average daily consumption of 280 grams of tortillas furnishes more than 500 mg. of calcium" (Cravioto, et al., 1945, p. 93).[1] However, not all of the women used lime in making tortillas. A substantial number used wood ashes, and these families would need extra calcium.

Clearly, foods containing the essential nutrients which are lacking in the diets should be eaten to supplement the staple foods which are grown. It appears, however, that either outside income

---

[1] These authors also note that during the preparation of tortillas, losses of thiamin and niacin are relatively small and that no measurable loss in riboflavin is noted.

would have to be increased or an increase in the amount of vegetables and fruits grown would be necessary.

(2). Type 3 Diet.

It is of interest to assess the nutritional value and monetary cost of the Type 3 diet (see Table 7) when rice is included with the tortillas, beans and oil. The cultural preference for rice is indicated by the fact that 43.5% of persons interviewed mentioned fried rice as one of their favorite foods (exceeded only by meat which was mentioned by 65.2%); 26.3% listed rice as one of the foods they considered best for adults; 18.2% one of the best for children; and 11.8% that it is good for sick persons.

When rice is entered into the program as an activity without being forced into the program, it does not enter the solution. Therefore, a minimum quantity of 100 pounds was entered and the solution is given in Appendix C-9.

The addition of rice to the diet was not beneficial. There was an increase in cost of $30.61. The less expensive sorghum dropped 105 pounds. The level of Vitamin A dropped 2%; riboflavin, 1.7%; calcium, .7%; and ascorbic acid stayed at the same level. In addition, the quantity of all other nutrients, i.e., protein, thiamin, niacin, and iron (although present in excess amounts) dropped in total amount present. The dietary content of the essential amino acids also dropped except for lycine which increased slightly.

(3) Type 4 Diet.

The next type of diet, Type 4, most often contains white cheese and eggs. Milk and meat are less common. Again, it was necessary to select appropriate levels of these items as restraints in the model. With a population such as the one being studied, these items are not plentiful and relatively low levels of each were selected. Fifty pounds of eggs (about 42 dozen) and 26 pounds (1/2 pound per week) of cheese were selected as minimum amounts. Rice remained in the program.

The addition of these amounts of eggs and cheese caused an increase in the cost of the diet to $553.29, an increase of $76.74 over the Type 3 diet or $107.35 more than the Subsistence Diet. However, the Vitamin A, riboflavin, ascorbic acid, and calcium deficiencies were not corrected to any substantial degree (Vitamin A, 35.1% of required; reboflavin, 55.4%; calcium, 34%; ascorbic acid, 5.5%; riboflavin dropped slightly.)

(4) Type 5 Diet.

A model was also set up with the most common vegetables, i.e., tomatoes, cabbage, and plantains, entered as activities. None of these items entered the solution as long as the Vitamin A, riboflavin, ascorbic acid and calcium were in the program as nonrestrictive. When these nutrients were again entered as restraints at recommended levels, tomatoes enter the solution, but beans increase to an excessive amount of 1,100 pounds (or over 3 pounds daily).

Complete Nutrition Model

It was decided at this point to test a model incorporating the most common food items, a combination of which could reasonably be expected to furnish a balanced diet at the lowest possible cost. It was necessary to limit maize and sorghum to maximum levels of a total of 2,920 pounds, or 8 pounds of cereal per day, and beans to 264 pounds. Other items, oil, rice, eggs, cheese, and oil were forced into the solution at minimum levels to give consideration to cultural practices.

The first solution resulted in the addition of 160 pounds of powdered milk, 147 pounds of mangoes and 2,083 pounds of bananas. This is clearly an excessive amount of bananas. Several successive runs were necessary to establish reasonable levels for various foods. As each food present in the solution entered, it was often at unreasonably high levels and it was necessary to add a maximum restraint level for that food.

The final optimum low-cost model is shown in Appendix C-10, and the solution is presented in Appendix C-11. Table 23 shows the foods selected, the percentage of each nutrient provided by that food, and its cost. It should be noted that the levels of eggs and powdered milk that entered the solution may appear higher than might be practical for this population. However, food items that entered the solution were selected on the criteria of most economic sources so that the 147 pounds of eggs (approximately 2.3 dozen per week)

Table 23. Foods and Their Contribution to the Low Cost Diet

Food Item	Amount (lbs.)	Percentage of Nutrient Supplied									Cost ($)
		Calories	Protein	Vitamin A	Thiamin	Riboflavin	Niacin	Ascorbic Acid	Calcium	Iron	
Sorghum	1490	45.7	96.6	28.1	121.8	29.6	71.5	0	15.8	77.2	119.20
Maize	1430	45.5	87.1	0	128.3	20.5	34.4	0	4.2	40.8	171.60
Beans	264	8.0	37.4	.8	28.5	6.3	6.7	5.6	14.7	22.5	132.00
Oil	50	3.9	0	0	0	0	0	0	0	0	31.50
Rice	100	3.2	4.3	0	1.6	.4	1.9	0	.4	1.3	39.00
Eggs	147	2.1	11.6	16.4	3.0	5.8	.2	0	3.1	.4	121.99
Cheese	26	.7	3.0	2.5	.3	1.6	.1	0	.3	.3	39.00
Tomatoes	156	.3	1.1	9.9	1.9	.8	1.0	25.0	.7	1.3	42.12
Cabbage	63	.1	.4	.4	.5	.3	.2	15.5	1.0	.3	12.55
Plantains	150	1.0	.8	3.2	1.2	.6	.7	11.6	.3	1.0	22.50
Bananas	150	.9	.9	2.2	.9	.8	.9	5.4	.4	.8	10.50
Powdered Milk	187	8.2	31.2	19.5	9.0	32.5	1.7	5.3	67.7	1.7	400.98
Mangoes	150	.5	.4	16.8	.9	.8	.7	31.5	.4	.4	22.50
Total percentage of amount recommended		120.1	274.8	100*	297.6	100*	120.0	100*	109.0	148.0	T = 1165.44

*Limiting nutrient

and the 187 pounds of powdered milk (roughly equivalent to 1.9 quarts of liquid milk daily) represent inexpensive sources of nutrition in comparison with other food items. The total cost of the yearly diet (objective function) is $1,165.54.[1] This is $703.54 more than the value of the products grown (see Table 11) and this amount of additional money would have to be earned for household food intakes to be at the recommended levels of nutrition. Another feasible alternative solution is the growing of kitchen gardens on a regular basis. The kinds and amounts of vegetables most appropriate will be discussed below.

Several qualifications should be noted. A few of the families had mango trees and banana trees near their homes, and a few were growing small plots of field peas or yucca. There did not appear to be sufficient activity of this sort to add substantially to the diet for most households, but these practices could be increased. Also, not taken into consideration is the practice, quite common, of selling the subsistence crops to traders immediately after harvest. When this occurs, the farmer receives less than the market value for produce that he must buy back later at the retail price. Nor are the cultural patterns of food distribution considered. During the field study, it was documented that there was some bias against giving certain protein and vegetable foods to young children, practices which

---

[1]The cost of coffee and sugar would need to be added to this amount since all families drank coffee each day, usually sweetened.

will certainly affect their nutritional status. In addition, the special dietary needs of nursing mothers, and the nutrition received by nursing babies were not considered in the models.

DISCUSSION AND RECOMMENDATIONS

Although there is a need for continued research and longitudinal field observations, the data collected for this study makes possible a cogent description of many typical social and economic traits of these subsistence farmers. It appears that the households are composed predominantly of nuclear families, which often have other relatives living with them. Second generation extended families are not common, because the small farms are probably not able to support the larger groups. The average household size is relatively large, seven persons; the farm man-labor units average 1.6 for that size household. Consequently, labor is probably not a limiting factor of farm production. There is a homogeneity of culture which is characterized by poverty; material possessions are meager. Most families live in adobe or mud and pole one-room houses with earthen floors and tile roofs. There is little furniture, clothing, or cooking and eating equipment. Small cash incomes are obtained by petty commercial activity and seasonal wage labor.[1] Women make and sell food items and, to a lesser extent, hand-crafted goods. In addition, most households raise one or two pigs to sell.

Behavior is traditional but not oppressively so. Women are chiefly concerned with cooking, which includes the time-consuming

---

[1] The extent of economic reliance on wages has not yet been documented but wage work is secondary to farming activities.

preparation of tortillas, carrying water (often from springs and streams), laundering clothing, usually in nearby streams, caring for children and raising chickens and pigs. Women also occasionally help in the fields but this is not considered a part of their regular duties. Men are chiefly engaged in the field work of farming. They also carry firewood and take care of the larger animals such as cows, oxen, and donkeys. Children begin to help with adult tasks when they are about 12 years old. Girls contribute by helping with the cooking, boys by performing minor field tasks such as cutting weeds. Smaller children help care for babies and very young children and run errands. Whenever the family can afford it, the children go to school, but the lack of proper clothing may keep some from attending.

There does not appear to be a strong feeling of in-group solidarity since external influences have considerable importance. Communication (radio broadcasts), readily available bus service to the provincial capital of Choluteca, seasonal wage work for the men, and women's market activities bring people into contact with a more modern world.

The chief source of livelihood is the production of maize, sorghum and beans in the upland areas of El Corpus and Guajiniquil and of maize and sorghum in the lowlands of Pavana. Each household relies on the production from small plots of land whether the farmer belongs to a cooperative or not. The average size of these plots is 1.1 <u>manzanas</u> (1.9 acres) in the uplands and 1.8 <u>manzanas</u> (3 acres)

in the lowlands. In both the mountainous areas and the plains, the farmers use traditional primitive methods. The flat terrain of the lowlands permits the use of oxen for plowing, and it is possible to plant larger fields cooperatively.

Cropping Activities and Diet

It has been shown that during and immediately following the planting season, the diets of most persons are, on the average, deficient in several nutrients. Vitamin A, riboflavin, and ascorbic acid are typically lacking. The intake of calcium, also, is inadequate for those households that use wood ashes instead of lime in the preparation of tortillas. The subsistence activities which furnish the staples, i.e., maize, sorghum, and beans, can supply enough calories, protein, and many essential nutrients if eaten in reasonable amounts. The traditional diet of tortillas, beans, and rice does not supply the levels of all essential nutrients that are necessary for good health. It is estimated that over 50% of the households were regularly eating only tortillas and beans. However, even when small amounts of eggs, cheese, meat or fresh vegetables were consumed, the diet was not complete.

Typical agricultural production activities differed for the upland and lowland areas. In the upland area, the intercropping of maize, sorghum and beans was typical. In the lowland, only maize and sorghum (intercropped) were found. By referring to Table 11, a comparison of typical yields of various practices shows that

maize can be intercropped with sorghum with practically no decrease in sorghum yield. Sorghum grown alone was found in the upland area and yielded 1,860 pounds per mz., whereas the intercropped sorghum in the same area yielded 1,800 pounds per mz. (see Table 11). The intercropped sorghum in the lowlands yielded 2,260 pounds per mz., which is better than the sorghum grown alone.

A comparison of the cropping systems and yields permits certain inferences. Although the 3-crop system produces crops valued (on the average) at $462, the subsistence supply of 264 pounds of beans is grown. The higher monetary value, $567, for the crops of the 2-crop system is offset by the cost of beans which must then be purchased for the diet. Growing beans in the lowlands is not feasible because they do not produce well, chiefly because of insects. The cost of bean seeds for planting may bring the two systems even closer to the same worth. The inference is that the lowland and upland farmers do not differ very much in the economic benefits of farming activities.

Since the goal of the farmers is to produce the foodstuffs of the traditional diet, the different cropping practices were evaluated with respect to the production of optimum nutrition by means of linear programming. It was found that the most nutritionally efficient systems were those which produced the highest yields of sorghum and beans. Maize, however, is preferred for the making of tortillas and is a more valuable crop. The growing of sorghum is a concession to environmental conditions, one which makes it possible for the farmers

to subsist on their small farms since maize does not produce well in the area.

Discussion of Hypothesis I

The findings concerning typical yields in terms of both the quantity of crops produced and the nutritional value of those crops uphold the hypothesis that resources are inadequate to supply well-balanced diets for all household members. The cropping systems are viable in the sense that production is sufficient to furnish the basic staples for the traditional diet in sufficient amounts.[1] The average small farm, with present technology, produces just enough to supply the average household of seven persons with the recommended allowances of calories, protein and some of the essential nutrients. However, because some nutrients are not present in the staple crops in sufficient amounts, additional foods are needed. The absence of any surplus of the crops produced makes the purchase of additional food unlikely. Other food-producing activities, such as growing small plots of vegetables or fruits, or raising chickens and pigs, are engaged in on such a small scale that they do not overcome the deficiencies. In addition, other household needs (such as clothing or transportation) would be met by selling part of the crop, leading to a situation where even calorie requirements might not be met.

---

[1]For the two-crop system of sorghum and maize, surplus production was shown to be sufficient to enable the purchase of beans but little else.

Discussion of Hypothesis 2

The second hypothesis, that subsistence farmers are caught in a self-sustaining "poverty trap," entails the consideration of economic factors that appear to be beyond the farmers' control.

The solution to a linear programming model that was used to develop a nutritionally complete low-cost diet (using familiar and readily available foods) shows that a nutritionally complete low cost yearly diet would cost $1,165.54 at the prevailing market prices (see solution, Appendix C-10. This is $703.54 more than the value of the products grown (for the 3-crop system). Clearly, crops produced on the amount of land available cannot supply all nutritional requirements, and money for additional food items is needed.

One solution might be an increase in crop production and the sale of such a surplus. In order to obtain an additional $703, 8,787 pounds of sorghum, 5,858 pounds of maize or 1,406 pounds of beans would have to be grown. If these were intercropped, this would mean that yields would have to increase 2.6 times for sorghum, 2.4 times for maize, or 40% more for beans. Or, at present yield levels, an additional 1.7 manzanas of land would be needed. This solution does not appear feasible under present systems of technology and land tenure.

Another solution might be work to earn the additional $703. Table 24 shows the prevailing daily wages (which are set by law), for the various occupational sectors in Honduras. To earn the

Table 24. Minimum Wages Paid for Day Labor in Southern Honduras[1]

Occupational Sector	Amount Received per Day Lempiras	$U.S.
Agriculture & Livestock		
1-5 Workers	4.60	2.30
6+ Workers	5.00	2.50
Mining	6.60	3.30
Industrial Manufacturing		
1-5 Workers	5.30	2.65
6+ Workers	5.50	2 75
Crafts		
1-5 Workers	5.30	2.65
Construction (& Quarries)	5.30	2.65
Commerce		
1-5 Workers	5.30	2.65
6+ Workers	5.50	2.75
Transportation (People & Merchandise)	5.50	2.75
Merchandising	5.50	2.75
Finance	5.50	2.75
Services	5.30	2.65
Maintenance of Docks & Boat Repair	7.10	3.55
Loading & Unloading at Marine Ports	7.10	3.55
Refineries & Pumping Stations	7.10	3.55
Railroad Maintenance & Repair	7.10	3.55
Growing Bananas for Export	7.10	3.55

[1]Figures from La Tribuna, July 15, 1981, Tegucigalpa.

amount needed would entail from 198 to 305 days of labor, depending on the wages that could be earned. At six days of labor a week, this would be eight to twelve months of outside employment for the farmer. This much time spent at wage employment would make it impossible for the farmer to raise the staple crops which supply his calories and protein. It is apparent that the farmer cannot raise enough of a surplus and cannot work enough at outside employment to purchase the food items needed to supplement the diet.

It seems, then, that economic, farming, and nutritional factors interact to produce a self-sustaining adaptation at minimal levels of nutrition, one in which a chronic state of under-nutrition seems inevitable.

It has also been shown that high rates of infant and child mortality are present, which brings up the spector of Malthusian principles. If an optimum adaptation to present resources has been reached, and if food supplies are barely adequate to sustain life, it is also possible that it is the nutritional factors which are serving to limit the size of this population.

An Alternative Solution

The most obvious and feasible solution toward the alleviation of some of the dietary deficiencies is to grow additional fruits and vegetables on a year-round basis. Each household had enough land near the house so that small vegetable gardens could be put in and

easily cared for. As mentioned above, a few households were growing small plots of field peas in this fashion.

(1) Vitamin A Deficiency.

Preformed Vitamin A is found only in foods of animal origin. Good sources are whole milk, butter, egg yolk, liver and kidney. However, carotine, which the body readily converts to Vitamin A, is found in both plant and animal products. The most important sources of carotine are the yellow, yellowish-red, and green fruits and vegetables. Vegetables having large amounts of carotine are carrots, sweet potatoes, spinach, tomatoes,[1] mustard greens, and kale. All of these except kale and mustard greens are familiar to most Hondurans[2] and are presumably well-adapted. In addition, yucca (cassava) leaves are an extremely good source of Vitamin A. This plant is commonly grown in the area for its tubers.[3] Another food suggested for possible introduction is dandelion greens.

On a weekly basis, the amount of each of these foods which would be needed to overcome the Vitamin A deficiency of the diet of the seven-person household is small, Table 25.

---

[1] Cherry tomatoes have about twice as much Vitamin A and ascorbic acid as common varieties. This variety will be meant when tomatoes are referred to. Cherry tomatoes are found in Honduras.

[2] Munsel, et al., 1949.

[3] Because they contain toxins, care must be taken in promoting the use of these leaves. Special preparation when cooking is necessary.

Table 25. Amount of Each Vegetable Needed to Provide the Family Vitamin A Needs

Food	Amount Needed per Week (lbs.)
Carrots	1.4
Yucca (cassava) leaves[1]	1.4
Dandelion Greens	1.6
Spinach	1.8
Sweet Potatoes (dark color)	2.0
Kale	2.9
Mustard Greens	3.0
Broccoli	6.9
Cherry Tomatoes	9.7

[1]Young green leaves

(2) Ascorbic Acid Deficiency.

Citrus fruits, leafy green vegetables, broccoli, green and red peppers, spinach, cabbage, kale, mustard greens, yucca leaves, and tomatoes are good sources of ascorbic acid. Many of these vegetables are also those that were high in Vitamin A. The amount of each vegetable of some of those high in ascorbic acid needed to correct deficiencies is given in Table 26.

Table 26. Amount of Each Vegetable Needed to Provide the Family Ascorbic Acid Needs

Food	Amount Needed per Week (lbs.)
Yucca Leaves	1.5
Red Peppers	2.9
Green Peppers	3.1
Mustard Greens	3.2
Kale	3.4
Broccoli	3.8
Spinach	5.4
Cherry Tomatoes	5.5
Cabbage	7.4

(3) Riboflavin Deficiency.

The best food sources of riboflavin are brewer's yeast and glandular meats. Cheese, eggs, milk, beef, leafy green vegetables, salmon, and bean sprouts are also good sources.

However, it is not feasible to make up the dietary shortages of this vitamin with garden vegetables alone since excessive amounts would be required. For example, it would take 25.7 pounds of yucca leaves, 33 pounds of broccoli, or around 40 pounds of mustard greens or spinach per week to supply the additional amounts needed. Avocado, eggs, and cheese are among the familiar foods that are good sources and some of these could be used. It may also be necessary to

introduce some method of fortification of foods as has been done with cereal grains in the U.S. Riboflavin deficiency is a widespread problem, "Clinical signs associated with riboflavin deficiency are found among persons of all ages in the developing countries of Southeastern Asia, Africa, and Latin America" (Wilson, et al., 1975, p. 262). Most common symptoms are swollen and sore lips with cracks at the corners of the mouth and seborrhea.

(4) Calcium Deficiency.

Milk and milk products are the best sources of calcium. Without these, it is difficult to provide the recommended daily allowances. Some leafy green vegetables are second to dairy products as good sources of calcium--kale, mustard greens, broccoli, and particularly yucca leaves. However, these vegetables could not be expected to supply all the needs. Spinach contains oxalic acid which combines with calcium to make the calcium in this vegetable unavailable.

(5) A Suggested Type of Garden.

From the nutrient content of various vegetables, it is simple to calculate appropriate amounts of garden vegetables that would be needed to correct certain deficiencies. Figure 3 presents an example of how these activities could contribute to subsistence crop production.

The chart, Figure 3, shows that the addition of very small weekly supplies of vegetables could be grown to overcome the deficiencies of Vitamin A and ascorbic acid for the average household

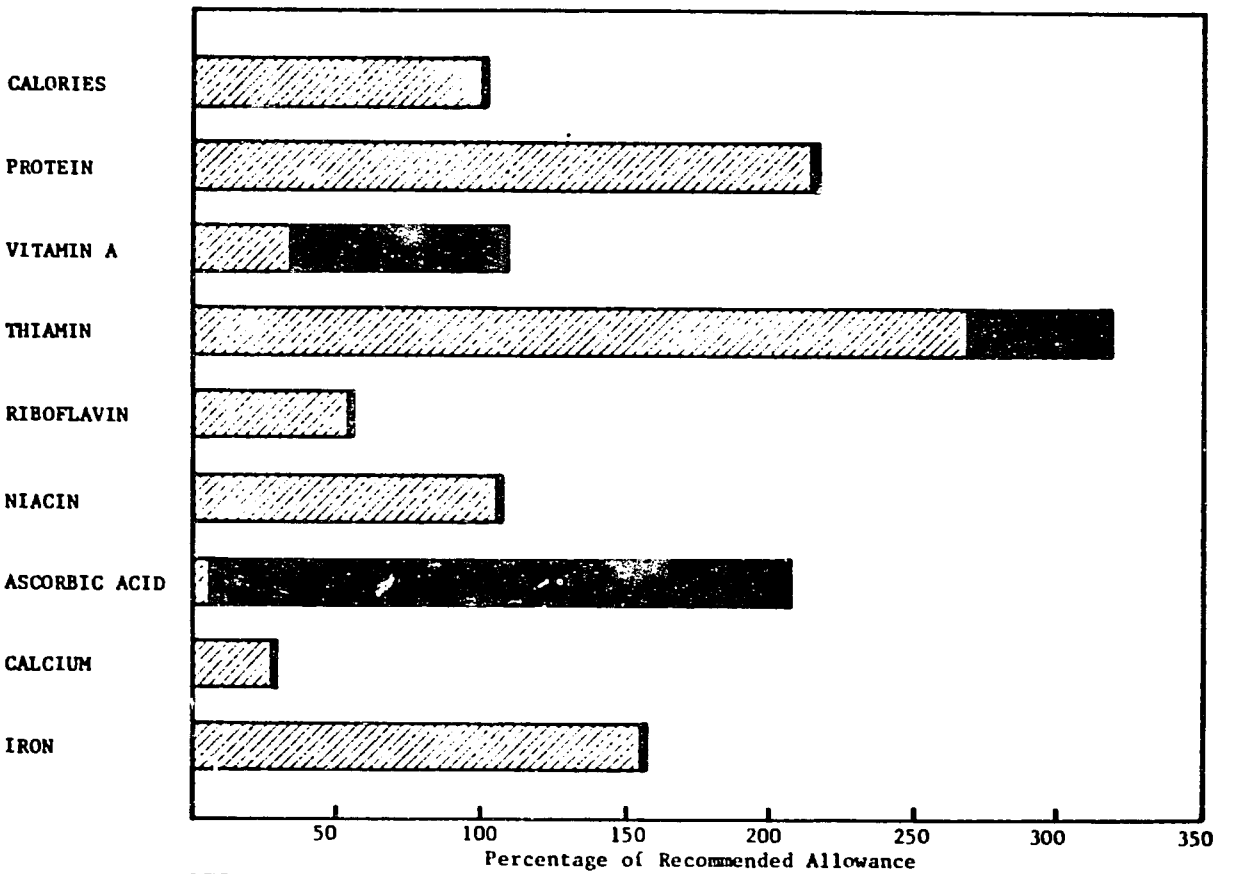

Subsistence diet of sorghum, maize, beans, and oil.

Weekly consumption of produce from small vegetable garden: 1 lb. carrots, 1 lb. broccoli, 1 lb. red peppers, 1 lb. green peppers, 1 lb. yucca (cassava) leaves, and 2 lbs. tomatoes.

Figure 3. Supplementing Nutrition with Vegetable Garden Produce,

of seven persons. Other means would be necessary to furnish adequate amounts of riboflavin and calcium.[1]

It would be necessary to plan the gardens and test species for local environmental conditions and for year-round production. Suitable types of vegetables could be grown at different seasons. Also to be taken into consideration is the need for an educational program to teach farming families the importance of consuming these vegetables on a regular basis. It might also be necessary to furnish some education on successful gardening methods. Initially, extra labor would be needed to prepare a suitable plot and to fence out chickens, pigs and other animals, but labor connected with the production of small amounts of vegetables on small plots would not be excessive. Gardens should also be small so that they could be watered during the dry season.

---

[1]For those households who do not use lime in preparing tortillas, extra calcium is needed.

IMPLICATIONS OF CHANGE

Although much of the foregoing has emphasized the economic and technological aspects of the existing subsistence systems of the small farmers in southern Honduras, sociocultural factors assume great importance when contemplating the introduction of changes to such systems. The social and political implications of agricultural development merit careful consideration. Even minor changes such as the modest improvement of diet by the use of higher yielding varieties of grain sorghum and regular production of garden vegetables may have greater consequences than those immediately evident.

Some General Considerations

In considering the ramifications of agricultural development it is useful to recognize not only the systemic nature of the agricultural production units but also the systemic nature of the development process itself. The development process exhibits strong interdependencies between the various elements in a complex way. It is this systemic characteristic that often leads to unforeseen or disruptive consequences. On a macro-scale, the development or modernization process involves farmers, agriculturalists, and business and government personnel. Changes in social, technological, educational, physical, economic, biological, and political variables are involved. It is the interrelatedness and interdependencies of these phenomena that constitutes their systemic nature.

In addition to structural aspects, systemic linkages form a part of the development process. The change target system and the change agent system must interact in patterned ways to accomplish the desired goals of both. The nature of these patterns is crucial to success, particularly at the micro-level and simplistic models of such interactions are unrealistic. Throughout the phases of change, initiation, legitimation and execution, change agents must incorporate a thorough understanding of the elements of the subjective culture of the target group. An understanding of appropriate role behavior, values, perceptions and sentiments are the prerequisites of success.

One of the basic assumptions shared by development agencies and scientific personnel is that people, such as subsistence farmers, universally desire an improvement of their conditions. Even though a variety of survival techniques exist in different countries and regions, subsistence farming is viewed in general as a difficult way of life, "burdened with underemployment of labor and heavy farm-family food requirements" (Loomis, 1971, p. 437). If properly planned ways to overcome various types of constraints can be managed, it is felt that efforts to improve the situation of these people will be both beneficial and welcomed: "Nevertheless, the potential rationality and desire for an improved life on the part of the traditional agriculturalists should not be underestimated" (ibid., p. 437). Thus the nature of attitudes and motivations of the change agent systems enter the development process system.

Another important aspect of the development process is the need for additional inputs and outside intervention such as that

furnished by central governments and/or development agencies. Subsistence farmers have, over generations, evolved systems of survival that they find the most satisfactory given their perceptions and goals. Left to their own initiatives, little change is likely without some form of intervention. In order to achieve effective improvements, it has been found that substantial technological, social, physical, economic, educational and political inputs are necessary.

In another sense, also, the political aspects of the development process are primary. In order for agricultural development on any scale to take place, institutional and political environments must be favorable. There are two general approaches or models of modernization relating to political factors. One is the entrepreneurial farm model, where government plays a supporting or enabling role, and the authoritarian model, where agricultural development is imposed (Holt, 1971). In most Western studies, as in this one, the entrepreneurial model is favored. It is assumed that, within the existing institutional framework of scarce resources and cultural restrictions and preferences, the traditional subsistence farmer is able to exercise freedom of choice concerning the allocation of factors at his disposal. National policies restrict him most severely in the areas of land rights and economic opportunities.

Where large-scale development is desired, it is suggested by some (Morse, 1971; Deutsch, 1971) that the entrepreneurial approach may need to be modified and that it may be necessary to combine private incentives with public powers if traditional agriculture is to become significantly more productive.

The Present Case

For the present case, the entrepreneurial approach is satisfactory. Political and institutional support exists for the INTSORMIL project with respect to the sorghum program in the form of government approval and the use of government facilities (the experiment station at La Lujosa) and personnel. It is not anticipated that there would be any opposition to such activities as vegetable growing and that decisions concerning such undertakings would lie with the farming families themselves.

Implementation of the gardening program would hinge on the ability of a change agent or agency to convince people that the increased use of vegetables for better nutrition would be worth the extra labor and time, since obvious economic benefits would not be apparent. Because vegetables do not have a high priority in the diets, substantial educational efforts concerning the nutritional needs of various age groups would be necessary. Educational efforts would also have to be directed toward the appropriate members of the families concerning the technological aspects of gardening. Some means of watering small gardens during the dry season would have to be researched. Since vegetable gardening would most likely fall within the province of women's activities, suitable incentives and mechanisms for women's involvement would have to be found. Children's feeding centers, which already exist and where many of the women help in preparing food, might serve as such a mechanism.

In the case of the sorghum program, one of the major considerations is a policy one, the necessity of underwriting risk. In the subsistence systems of southern Honduras, a state has been reached in which household production barely suffices to feed family members at minimum levels. If the proposed innovation is successful, people will eat slightly better. If it fails, people may very well suffer increased hunger and death. Other than the objective risk involved, the farmers' perceptions of risk is also paramount to the project's success. "Farmers estimate the risks of change with a calculus so sophisticated its complexity is seldom suspected by outsiders and rarely taken account of by project planners" (Morss, et al., 1976, p. 60).

In summary, although small changes may be proposed, the systemic characteristics of subsistence farming and of the development process indicate that as a farming system embarks on a course of increased capacity or productivity, a new and different system results which is based on different economic and social principles. This new system may also reach a state of relative equilibrium with respect to inputs and organization in a relatively short time and may persist for some time. It is also possible that such changes may trigger an accelerated rate of progress to even more favorable conditions. It is also possible, however, that disruptive and undesirable effects can result. A latent function of improved nutrition in the present case might be the reduction of child and infant mortality rates which, without birth control efforts, could lead to a population expansion to levels beyond that which the increased food supply could support.

Or, equally possible, a change in old values might result in a desire to limit the number of children because not as many would be expected to die. It is also possible that, with better nutrition, farmers would be able to work harder and aspiration levels would rise.

Because better nutrition for the Honduran subsistence farmers, the goal of the INTSORMIL project, appears to be a highly desirable end, it is felt that better yields of sorghum and modest levels of additional vegetable foods easily grown by each household would improve the health and welfare of these families.

APPENDICES

APPENDIX A

INTERVIEW SCHEDULE*

Sorghum Use and Nutrition in Honduras

(THE POPULATION TO BE SAMPLED CONSISTS OF BOTH VILLAGE AND DISPERSED HOUSEHOLD UNITS IN THE GRAIN SORGHUM (SORGHUM BICOLOR L. MOENCH) GROWING REGION OF SOUTHERN HONDURAS. THE FOLLOWING SCHEDULE IS DESIGNED TO AID IN THE COLLECTION OF SELECT BASE LINE DATA CONCERNING SOCIAL, NUTRITIONAL AND AGRONOMIC FACTORS RELATED TO SORGHUM GROWING AND USE IN THAT AREA.)

Interview Dates: Interviewer_____

Initial visit_____

Call back_____

Call back_____

Call back_____

Completed_____

(INTERVIEWER: INTRODUCE YOURSELF, TELL WHERE YOU ARE FROM, NAME THE HONDURAN AGENCY THAT YOU ARE COOPERATING WITH, AND STATE THAT YOU ARE VISITING SOME OF THE VILLAGES IN THIS PART OF HONDURAS IN ORDER TO LEARN SOMETHING ABOUT THE WAY PEOPLE GROW THEIR CROPS AND ABOUT HOW THEY PREPARE THEIR FOOD. STATE THAT YOU WOULD LIKE THEIR HELP AND WOULD LIKE TO ASK THEM A FEW QUESTIONS ABOUT THEMSELVES AND THEIR FAMILY.)

Data Sheet

		CARD #1
Household ID	_____	_____ (1-4)
Village	_____	_____ (5)
Department	_____	_____ (6)
Location in Village (or with respect to village.)	_____	_____ (7)
Other	_____	_____ (8)
Name of Male Head of House	_____	_____ (9-44)
Name of Wife of Head (or Female Head of House if no Male Head.)	_____	_____ (45-80)

*This interview schedule is not intended for use as a formal survey questionnaire but is to be used to organize questions and observations of researchers in a setting which requires methodological flexibility and hence, a modification of questionnaire techniques.

(INTERVIEWER: IN ADDITION TO DATA TO BE COLLECTED FROM EACH RESPONDENT, DIFFERENT SECTIONS OF THIS INSTRUMENT WILL BE APPLICABLE TO CERTAIN HOUSEHOLD MEMBERS ONLY. FILL IN THE APPROPRIATE SECTIONS FOR EACH RESPONDENT AS NOTED WITHIN, E.G., MALE HEAD OF HOUSEHOLD FOR THOSE ACTIVITIES RELATING TO HIS FARMING TASKS, THE PERSON RESPONSIBLE FOR MOST OF THE COOKING FOR DATA CONCERNING FOOD PREPARATION, ETC. SEVERAL VISITS TO EACH HOUSEHOLD MAY BE NECESSARY TO COLLECT THE DESIRED DATA. MAKE APPOINTMENTS AND RETURN TRIPS WHERE NECESSARY. REMEMBER THAT IT IS PARTICULARLY IMPORTANT TO AVOID LEADING THE RESPONDENT'S ANSWERS SO THAT RELIABLE DATA CONCERNING RELEVANT SUBJECTIVE CATEGORIES AND PERCEPTIONS CAN BE OBTAINED.)

PART I. MEN'S ACTIVITIES

(QUESTION MALE HEAD OF HOUSE.) CARD #2

"TO BEGIN WITH, I WOULD LIKE TO ASK YOU SOME QUESTIONS ABOUT YOURSELF AND YOUR FAMILY."

A. Social and Family Data:

1. What is your marital status?

_____1 Single

_____2 Widowed

_____3 Separated or divorced

_____4 Other

_____5 Married

_____6 Unión libre _____ (6)

2. Sex of Respondent

_____1 Male _____2 Female _____ (7)

3. What is your age?

_____ _____ (8-9)

4. What is your wife's age?

_____ _____ (10-11)

5. What is your wife's name?

_____ _____ (12-47)

CARD #2

6. Are you the head of your household?

_____1 Yes _____2 No _____ (48)

7. What is your relationship to the head of the house?

_____ _____ (49)

8. How many persons live in your house? (INCLUDE CHILDREN, GRANDCHILDREN, PARENTS, AND ALL OTHERS.)

_____ _____ (50-51)

9. How many of your children are living here with you at the present time?

_____ _____ (52-53)

10. How many children live away from home?

_____ _____ (54-55)

11. This means, then, that you have _____ living children? _____ (56-57)

CARD #3

B. Men's Occupational Data:

"NOW WE WOULD LIKE TO LEARN SOMETHING ABOUT YOUR WORK."

12. Is your principal occupation farm work?

_____1 Yes
(IF YES, GO TO QUESTION 18.)

_____2 No

_____ (6)

13. If no, what is your principal work?

_____ (7)

14. Where do you do this work?

_____ (8)

15. How many hours per week do you spend at this work? (TO ESTIMATE NUMBER OF HOURS, IT MAY BE NECESSARY TO ASK RESPONDENT WHEN HE LEAVES HOME, I.E., AT SUNRISE OR BEFORE, HOW LONG IT TAKES TO GET TO WORK, AND WHEN HE LEAVES TO COME HOME, I.E., SUNSET OR AFTER, ETC.)

_____hours _____ (9-10)

16. Do you also farm or raise something part of the time?

_____1 No
(IF NO, GO TO QUESTION 83, PAGE 23.)

_____2 Yes _____ (11)

17. If yes, how much of this do you do? (PROBE FOR ESTIMATE OF RELATIVE IMPORTANCE OF PART-TIME FARMING.)

_____

_____

_____ (12-13)

(CONTINUE WITH QUESTION 18.)

CARD #3

18. In your farming work, what jobs do you do?

Job	During season this work is done, how many hours per week do you yourself do this? (ESTIMATE FROM RESPONSES.)	
_____1 Preparing land, cutting, burning		(14-16)
_____2 Preparing land, hoeing		(17-19)
_____3 Plowing		(20-22)
_____4 Planting		(23-25)
_____5 Cultivating		(26-28)
_____6 Harvesting		(29-31)
_____7 Threshing		(32-34)
_____8 Other (SPECIFY)		(35-37)

19. Do you have livestock?

_____1 No _____2 Yes (38)

(IF YES, LIST KIND, NUMBER , WHAT FED, AND THE PURPOSES FOR WHICH GROWN IN CHART BELOW.)

20.

Animal (kind)	How many?	What do you feed them?	For what purpose do you keep or raise these animals? How many for: Meat	To Trade	To Sell	Dairy or Poultry Products	for Draft	
1.								(39-51)
2.								(52-64)
3.								(65-77)
4.								(6-18)
5.								(19-31)
6.								(32-44)
7.								(45-57)

(CONTINUE LIST IF NECESSARY)

CARD #5

21. What kinds of crops do you grow?
(INCLUDE CEREALS, LEGUMES, ROOT CROPS, VEGETABLES & FRUITS.)

Cereals:	On what size plot grown?	How much was produced the last time crop was grown?	Was this a good or a bad season?	
1.				(6-11)
2.				(12-17)
3.				(18-23)
4.				(24-29)
5.				(30-35)
Legumes:				
1.				(36-41)
2.				(42-47)
3.				(48-53)
4.				(54-59)
Root crops, vegetables, & fruits:				
1.				(60-65)
2.				(66-71)
3.				(72-77)
4.				# (6-11)
5.				(12-17)
6.				(18-23)
7.				(24-29)

(NOTE ADDITIONAL CROPS FOR EACH CATEGORY IF NUMBER GROWN EXCEEDS SPACES PROVIDED.)

CARD #6

22. Do you grow any crops to sell or trade?

_____1 No _____2 Yes (45)

If yes, what are these crops?

Crop:	How much of this crop do you sell? (ESTIMATE %)	trade? (ESTIMATE %)	
1.			(46-50)
2.			(51-55)
3.			(56-60)
4.			61-65)

(LIST ADDITIONAL)

CARD #7

23. Is sorghum grown in this region?

_____1 No _____2 Yes (6)

(IF YES, GO TO Q.27.)

24. If no, would you be interested in growing sorghum for food?

_____1 No _____2 Yes (7)

25. If no, could you tell me why you would not be interested?

_____

_____

_____ (8-9)

(GO TO QUESTION 73, PAGE 19.)

26. If yes, what are some of the reasons you might like to grow sorghum for food?

_____

_____

_____ (10-13)

(GO TO QUESTION 73, PAGE 19.)

CARD #7

27. What are the local varieties of sorghum that are grown?
(SHOW RESPONDENT SAMPLES OF SORGHUM AND CHECK THOSE THAT ARE GROWN.)

_____1

_____2

_____3

_____4

_____5

_____6 (12-17)

28. Could you tell me the main uses of sorghum in this region?

_____1 Food

_____2 Feed

_____3 Forage

_____4 Sale

_____5 Other (SPECIFY, INCLUDING BY-PRODUCT USE) (18-22)

29. What are these other uses?

_____

_____

_____ (23-25)

30. Do you yourself grow any sorghum?

_____1 No

_____2 Yes (26)

31. If no, why do you not grow sorghum?

_____

_____ (27-28)

(GO TO QUESTION 73, PAGE 19.)

(IF YES, CONTINUE WITH QUESTION 32)

CARD #7

32. Could you tell me some of the reasons why you grow sorghum? (PROBE FOR RELATIVE VALUE OF CROP.)

_____ (29-30)

33. Do you get your seed

_____1 by keeping some from each crop?

_____2 by purchasing it?

_____3 or by some other way? (SPECIFY) _____ (31-33)

_____ (34)

34. How much of the sorghum you grow is used for (ESTIMATE %)

food?_____ _____ (35-37)

feed?_____ _____ (38-40)

forage?_____ _____ (41-43)

sale?_____ _____ (44-46)

other?_____ _____ (47-49)

35. Do you grow sorghum together with other crops?

_____1 No _____2 Yes _____ (50)

36. Which crops?

_____1 Maize

_____2 Beans

_____3 Other(s) (SPECIFY) _____ (51-53)

37. _____

_____ _____ (54-55)

CARD #7

(FIELD OBSERVATION OF SORGHUM GROWING PRACTICES. DATA FOR QUESTIONS 38 THROUGH 72 IS TO BE OBTAINED BY A COMBINATION OF OBSERVATION, MEASUREMENT AND QUESTIONING.)

38. (IS FARMER PRACTICING INTERCROPPING OR MONOCULTURE?)

_____1 Intercropping → (ANSWER QUESTIONS 39 THROUGH 50.)

_____2 Monoculture → (ANSWER QUESTIONS 51 THROUGH 59.)

_____ (56)

(INTERCROPPING SYSTEM:)

39. (AMOUNT OF LAND PLANTED IN SORGHUM:) (DETERMINE BY PHYSICAL INSPECTION.)

_____hectares _____ (57-59)

40. (CROP GROWN WITH SORGHUM:)

_____ Maize _____ (60)

_____ Beans (NOTE VARIETY) _____ (61)

→ _____ _____ (62)

_____ Other(s) (SPECIFY) _____ (63)

→ _____ _____ (64)

_____ _____ (65)

41. (PLANTING SPACE IF GROWN IN ROWS:) (MEASURE)

Width of rows _____cm. _____ (66-67)

Width between plants in rows (average) _____cm. _____ (68-69)

42. (DENSITY OF SORGHUM IF NOT GROWN IN ROWS:) (COUNT TYPICAL NUMBER OF PLANTS PER SQUARE FOOT.)

_____plants per square foot _____ (70-72)

43. (RIDGING:) (MEASURE) CARD #8

_____1 No ridging, flat

_____2 Low ridging, height _____cm.

_____3 High ridging, height _____cm. _____ (6-8)

CARD #8

44. What month is the sorghum crop planted? (ASK RESPONDENT)

_____ (9)

The first or last part of the month?

_____ (10)

45. What month is the other crop planted?

_____ (11)

The first or last part of the month?

_____ (12)

46. What month is the sorghum harvested?

_____ (13)

The first or last part of the month?

_____ (14)

47. What month is the other crop harvested?

_____ (15)

The first or last part of the month?

_____ (16)

48. (TYPICAL YIELDS FOR BOTH CROPS:) (CALCULATE THESE AMOUNTS USING SIZE OF PLOTS AND RESPONDENT'S CATEGORIES.)

Sorghum_____ (17-19)

Other crop_____ (20-22)

49. (TYPE OF SORGHUM BEING GROWN:)

Local variety_____ (23)
(AS CLASSIFIED IN QUESTION 27.)

Type of head_____ (24)
(INDICATE SIMILARITY TO ONE OF THE TYPES SHOWN IN ATTACHED ILLUSTRATION OF PANICLE TYPES 1-9.)

Height of plant_____meters (25-26)

CARD #8

50. (SOIL ON WHICH SORGHUM AND SECOND CROP ARE BEING GROWN:) (GIVE ONLY PREDOMINANT TYPE.)

Texture: (USE SIMPLE FIELD TESTS AS DESCRIBED IN ATTACHED CHART.)

_____1 Sandy loam

_____2 Silt loam

_____3 Loam

_____4 Clay loam

_____5 Other (SPECIFY OR COMMENT) _____ (27)

_____ _____ (28)

Soil pH: (USE "SOILTEX" TEST KIT.)

_____ _____ (29)

(GO TO QUESTION 60.)

(MONOCROPPING SYSTEM:)

51. (AMOUNT OF LAND PLANTED IN SORGHUM:) (DETERMINE BY PHYSICAL INSPECTION.)

_____hectares _____ (30-32)

52. (PLANTING SPACE FOR SORGHUM GROWN ALONE IF GROWN IN ROWS:) (MEASURE.)

Width of rows _____cm. _____ (33-34)

Width between plants in rows (average) _____cm. _____ (35-36)

53. (DENSITY OF SORGHUM IF NOT GROWN IN ROWS:) (COUNT TYPICAL NUMBER OF PLANTS PER SQUARE FOOT.)

_____plants per square foot _____ (37-38)

54. (RIDGING:) (MEASURE)

_____1 No ridging, flat

_____2 Low ridging, height _____cm.

_____3 High ridging, height _____cm. _____ (39-41)

CARD #8

55. What month is the sorghum crop planted? (ASK RESPONDENT.)

_____ (42)

The first or last part of the month?

_____ (43)

56. What month is the sorghum crop harvested?

_____ (44)

The first or last part of the month?

_____ (45)

57. (TYPICAL YIELD FOR SORGHUM GROWN ALONE:) (CALCULATE YIELD USING SIZE OF PLOT AND RESPONDENT'S CATEGORIES.)

_____ (46-48)

58. (TYPE OF SORGHUM BEING GROWN:)

Local variety_____ (49)
(AS CLASSIFIED IN QUESTION 27.)

Type of head_____ (50)
(INDICATE SIMILARITY TO ONE OF THE TYPES SHOWN IN ATTACHED ILLUSTRATION OF PANICLE TYPES 1-9.)

Height of plant_____meters (51-52)

59. (SOIL ON WHICH SORGHUM IS BEING GROWN:) (GIVE ONLY PREDOMINANT TYPE.)

Texture: (USE SIMPLE FIELD TESTS AS DESCRIBED IN ATTACHED CHART.)

_____1 Sandy loam

_____2 Silt loam

_____3 Loam

_____4 Clay loam

_____5 Other (SPECIFY OR COMMENT) (53)

_____ (54)

CARD #8

Soil pH: (USE "SOILTEX" TEST KIT.)

_____ (55)

(CONTINUE WITH QUESTION 60.)

60. How do you plan to use the sorghum crop that you are now growing?

		How much for this purpose?	
_____	Animal feed	_____	(56-58)
_____	Sell it	_____	(59-61)
_____	Human consumption	_____	(62-64)
_____	Other (SPECIFY)	_____	(65-67)
	_____		(68)

61. Do you intend to store this sorghum?

_____1 No _____2 Yes (69)

For how long?

_____ (70)

CARD #9

62. How many sorghum crops do you grow every year?

_____1 One _____2 More than one (6)

If more than one, how many?

_____ (7)

How soon after planting one sorghum crop do you plant the next one?

_____ (8)

How long a time is there between sorghum harvests?

_____ (9)

CARD # 9

63. Do you have problems with insects in growing sorghum?

_____1 No _____2 Yes _____ (10)

If yes, could you describe this damage?

_____

_____

_____ (11-13)

(ESPECIALLY NOTE PRESENCE OF SYMPTOMS OF SORGHUM MIDGE OR FALL ARMY WORM.)

64. Do you have problems with crop diseases in growing sorghum?

_____1 No _____2 Yes _____ (14)

If yes, could you describe this damage?

_____

_____

_____ (15-17)

(ESPECIALLY NOTE PRESENCE OF SYMPTOMS OF DOWNY MILDEW.)

65. Do you have damage from birds?

_____1 No _____2 Yes _____ (18)

How much do you lose? (PROBE FOR ESTIMATE OF AMOUNT LOST, COMPARISONS IF DIFFERENT VARIETIES ARE GROWN.)

_____

_____

_____

_____ (19-21)

CARD #9

66. Do you have damage from other animals? (INCLUDING RODENTS.)

_____1 No _____2 Yes _____ (22)

Which animals cause damage?

_____

_____

_____ (23-25)

How much damage do they do?

_____

_____

_____ (26-28)

67. How do you store your sorghum?
(OBSERVE, PHOTOGRAPH, AND DESCRIBE STORAGE FACILITIES.)

_____ (29-31)

68. What problems do you have with storage? (INSECTS, RODENTS, MOISTURE, ETC.?)

_____ (32-34)

CARD #9

69. Are some types of sorghum better to store than others?

_____1 No _____2 Yes _____ (35)

Which kinds keep better in storage?

_____

_____

_____ (36-37)

Why do these keep better?

_____

_____ (38-39)

70. Do you find it necessary to use fertilizer in growing sorghum?

_____1 No _____2 Yes _____ (40)

What kind do you use?

_____

_____ (41-42)

71. (SORGHUM GROWING PRACTICES: FARM TASKS, TOOLS AND EQUIPMENT, WORK GROUPS AND SCHEDULING. DOCUMENT WITH PHOTOGRAPHS. NOTE UNDER TOOLS AND EQUIPMENT IF FARMER HAS ACCESS TO OXEN OR OTHER DRAFT ANIMALS.)

"WE WOULD LIKE TO KNOW SOMETHING ABOUT HOW YOU GROW YOUR SORGHUM CROP. COULD YOU TELL US ABOUT SOME OF THE METHODS YOU USE?"

Activity	What tools & equipment are used for this task?	How many persons are needed for this job?	What persons work together on this job? (FAMILY MEMBERS, NEIGHBORS, ETC.? INCLUDE ANY CHILDREN.)	When is this task normally done?	
1. Ground preparation					(43-54)
2. Plowing (or hoeing)					(55-66)
3. Planting					(67-78)
4. Fertilizing					#10 (6-17)
5. Cultivating					(18-29)
6. Harvesting					(30-41)
7. Threshing					(42-53)
8. Transport					(54-65)
9. Storing					(66-77)

(USE EXTRA PAGES AS NEEDED FOR MORE DETAILS.)

CARD #11

72. Do you usually hire someone to help with any of these jobs?

_____1 No _____2 Yes (6)

For what job?	No. persons hired?	How much is usually paid for this type work?	Who are these people?

(7-51)

73. Who do you talk with about new methods of farming? (PROBE FOR CATEGORY OF PERSON OR RELATIONSHIP TO RESPONDENT, I.E., EXTENSION AGENT, LEADING FARMER IN AREA, NEIGHBOR, SPOUSE, ETC. LIST MORE THAN ONE IF GIVEN.)

(52-54)

74. Whose ideas about farming methods do you value the most? (GIVE CATEGORY OF PERSON.)

(55)

75. Who is the person who has the most to say about what crops you grow, yourself or someone else?

_____1 Self _____2 Other person (56)

Who is this person?

_____ (57)
(CATEGORY OR RELATIONSHIP)

CARD #11

76. Does anyone in your family ever go hunting?

_____1 No _____2 Yes _____ (58)

Who goes?

How often? _____ (59-60)

What is hunted? _____ (61)

What time of year? _____ (62-63)

_____ (64)

77. Does anyone in your family ever go fishing?

_____1 No _____2 Yes _____ (65)

Who goes? _____ (66-67)

How often?

What time of year? _____ (68)

_____ (69)

(LAND TENURE AND GENERAL CULTURAL PRACTICES: INTERVIEWER IS TO OBSERVE AND DESCRIBE GENERAL FARMING METHODS USING INDIRECT QUESTIONS AND MEASUREMENT. PHOTOGRAPHS ARE TO BE TAKEN OF AS MANY ACTIVITIES AS POSSIBLE.)

78. Number of plots of land farmed by family:

_____ _____ (70-71)

CARD #12

79. Size of plots:

_____ (6-7)

_____ (8-9)

_____ (10-11)

_____ (12-13)

_____ (14-15)

_____ (16-17)

_____ (18-19)

_____ (20-21)

(CONTINUE IF NECESSARY)

80. Types of land tenure:

	No. of plots	
_____Private ownership	_____	(22-24)
_____Sharecropping	_____	(25-27)
_____Rental	_____	(28-30)
_____Cooperative	_____	(31-33)
_____Other (DESCRIBE)	_____	(34-36)
_____		(37)

81. Methods of land preparation:
(DESCRIBE TECHNIQUES OF LAND CLEARING AND HOW LAND IS READIED FOR PLANTING, WHETHER BY HAND OR USE OF PLOW AND DRAFT ANIMALS. IF TRACTORS ARE USED, NOTE SIZE.)

(38-40)

CARD #12

82. Is fertilizer used?

_____1 No _____2 Yes _____ (41)

Kinds of fertilizer used:

_____

_____

_____

_____ _____ (42-45)

Fallowing practices:

_____Land rotation _____ (41)

_____Crop rotation _____ (42)

What crops?(LIST SEQUENCE.)

_____ _____ (43)

_____ _____ (44)

_____ _____ (45)

_____ _____ (46)

_____Permanent cultivation _____ (47)

_____Other (DESCRIBE.) _____ (48)

_____

_____ _____ (49)

CARD #13

C. Male Food Attitudes:

"NOW I WOULD LIKE TO ASK YOU SOME THINGS ABOUT WHAT FOODS YOU EAT AND WHAT KINDS OF FOOD YOU LIKE."

(24-HOUR RECALL: ASK RESPONDENT TO RECALL HIS FOOD INTAKE FOR THE DAY PREVIOUS TO THE INTERVIEW.)

83. Day of week of recall:

_____1 Monday

_____2 Tuesday

_____3 Wednesday

_____4 Thursday

_____5 Friday

_____6 Saturday

_____7 Sunday

_____ (6)

"I WOULD LIKE YOU TO TELL ME EVERYTHING YOU ATE AND DRANK FROM THE TIME YOU GOT UP IN THE MORNING YESTERDAY UNTIL YOU WENT TO BED AT NIGHT. PLEASE MENTION EVERYTHING YOU ATE OR DRANK AT HOME, AT WORK AND AWAY FROM HOME. INCLUDE SNACKS AND DRINKS OF ALL KINDS. I ALSO NEED TO KNOW WHERE YOU ATE THE FOOD, AND NOW LET US BEGIN."

84. What time did you get up yesterday?

_____ _____ (7)

85. Was it the usual time?

_____1 No _____2 Yes _____ (8)

86. What was the first time you ate or had anything to drink yesterday morning? (LIST ON THE FOOD INTAKE FORM THAT FOLLOWS.)

87. Where did you eat? (LIST ON FORM.)

88. Now would you tell me what you had to eat and how much? (LIST ON FORM.)

CARD #13

(CONTINUE WITH FORM, OCCASIONALLY ASKING, "WHEN DID YOU EAT AGAIN?" OR, "IS THERE ANYTHING ELSE?")

89. Did you have anything to eat or drink during the night?

_____1 No _____2 Yes _____ (9)

(LIST FOOD AND AMOUNT ON FORM.)

90. Was your food intake yesterday unusual in any way?

_____1 No _____2 Yes _____ (10)

Why?

_____ _____ (11)

In what way?

_____ _____ (12)

CARD #13

24-HOUR FOOD INTAKE FORM

Time	Where eaten	Food (or drink)	Type and/or preparation	Amount	Food Code	Amount Code

CARD #14

91. Do all the members of your family eat together?
(GET DESCRIPTION OF EATING HABITS: DO MEN, WOMEN & CHILDREN EAT AT SAME PLACE AND TIME? IF NOT, WHAT CUSTOMS DO THEY OBSERVE?)

_____ (6-9)

92. Who decides what the family is going to eat?

_____ (10)

93. What kinds of foods do you like best?

_____ (11-15)

94. Do you have special foods when visitors come?

_____1 No _____2 Yes _____ (16)

What foods?

_____

_____

_____ (17-19)

95. Does everyone eat together when visitors come? (DESCRIBE CUSTOMS.)

_____ (20-22)

CARD # 14

96. In your opinion, are there foods that are best for adults?

_____1 No _____2 Yes _____ (23)

97. What are these?

_____

_____

_____ (24-28)

98. Why are these best?

_____ (29-30)

99. What foods are best for babies?

_____

_____

_____ (31-35)

100. Why are these best?

_____ (36-37)

101. Are you able to give all these foods to your babies?

_____1 Yes _____2 No _____ (38)

102. Which are you unable to give them?

_____

_____

_____ (39-40)

CARD # 14

103. In your opinion, are there foods that are best for children?

_____1 No _____2 Yes _____ (41)

104. What foods?

_____

_____

_____ (42-46)

105. Why are these best?

_____ (47-48)

106. Are you able to give all these foods to your children?

_____1 Yes _____2 No _____ (49)

107. Which are you unable to give them?

_____

_____

_____ (50-51)

108. Are there foods that are best for old people?

_____1 No _____2 Yes _____ (52)

109. Which ones?

_____

_____ (53-57)

110. Why are these best?

_____ (58-59)

CARD #14

111. In your opinion, what are the main causes of illness in your village?

_____ (60-61)

112. In your family?

_____ (62-63)

113. In your opinion, are there special foods that are best for sick persons?

_____1 No _____2 Yes _____ (64)

114. What are these foods?

_____

_____ (65)

115. In your opinion, are there certain foods that sick persons should avoid?

_____1 No _____2 Yes _____ (66)

116. What are these foods?

_____ (67)

117. Why are they bad?

_____ (68)

118. What foods are best for mothers that are nursing babies?

_____

_____ (69)

CARD #14

119. In your opinion, are there any foods that are bad for babies?

_____1 No _____2 Yes _____ (70)

120. What are these foods?

_____

_____ (71)

121. Why are they bad?

_____ (72)

122. How old should a baby be when its mother stops nursing it?

_____ (73)

123. At what age should children be given the same food that the parents eat?

_____ (74-75)

124. (ADDITIONAL COMMENTS ABOUT FOOD.)

_____ (76)

(THANK RESPONDENT FOR HIS COOPERATION AND MAKE ARRANGEMENTS FOR ANY RETURN VISITS THAT MAY BE NECESSARY.)

CARD #15

PART II. WOMEN'S ACTIVITIES

(THIS PART TO BE ANSWERED BY WIFE OF HEAD OF HOUSE OR FEMALE HEAD.)

"TO BEGIN WITH, I WOULD LIKE TO ASK YOU SOME QUESTIONS ABOUT YOURSELF AND YOUR FAMILY."

A. Social and Family Data:

125. What is your marital status?

_____1 Single

_____2 Widowed

_____3 Separated or divorced

_____4 Other

_____5 Married

_____6 Unión libre _____ (6)

126. Sex of Respondent

_____1 Male _____2 Female _____ (7)

127. What is your age?

_____ _____ (8-9)

128. What is your husband's age?

_____ _____ (10-11)

129. What is your husband's name?

_____ _____ (12-47)

130. Are you the head of your household?

_____1 Yes _____2 No _____ (48)

131. What is your relationship to the head of the house?

_____ _____ (49)

CARD #15

132. How many persons live in your house? (INCLUDE CHILDREN, GRANDCHILDREN, PARENTS, AND ALL OTHERS.)

_____ (50-51)

133. How many of your children are living here with you at the present time?

_____ (52-53)

134. How many children live away from home?

_____ (54-55)

135. This means, then, that you have _____living children? (56-57)

136. Have you had any children who are not now living?

_____1 No _____2 Yes (58)

How many?

_____ (59-60)

At what ages did they die?

_____

_____

_____

_____ (61-74)

137. Have you lost any children before birth?

_____1 No _____2 Yes (75)

How many?

_____ (76)

"NOW COULD YOU TELL ME A LITTLE BIT ABOUT YOUR CHILDREN, THOSE THAT ARE LIVING?" (GO TO CHART ON THE FOLLOWING PAGE, QUESTION 138.)

CARD #16

138. (LIST RESPONDENT'S LIVING CHILDREN-ELDEST TO YOUNGEST.)

Name	Age	Sex	Marital Status					Live in Household?		Occupation	Number Children	Live in Household?		Comments	
			S	M	D	W	O	Yes	No			Yes	No		
1.															(6-14)
2.															(15-23)
3.															(24-32)
4.															(33-41)
5.															(42-50)
6.															(51-59)
7.															(60-68)
8.															(69-77)
9.															#17 (6-14)
10.															(15-23)
11.															(24-32)
12.															(33-41)
13.															(42-50)
14.															(51-59)
15.															(60-68)

(CONTINUE LIST ON ADDITIONAL PAGE IF NECESSARY.)

139. (LIST OTHERS IN HOUSEHOLD, INCLUDE CHILDREN'S CHILDREN WHO MAY HAVE BEEN DESIGNATED ON PREVIOUS PAGE.)

Name	Age	Sex	Marital Status					Occupation	Relationship to Head of House	Comments	
			S	M	D	W	O				
1.											(6-12)
2.											(13-19)
3.											(20-26)
4.											(27-33)
5.											(34-40)
6.											(41-47)

(CONTINUE LIST IF NECESSARY.)

CARD #18

B. Women's Occupational Data:

"NOW WE WOULD LIKE TO KNOW ABOUT SOME OF THE THINGS A WOMAN IN THE FAMILY DOES."

140. What kind of work do you spend the most time doing?
(INCLUDE SUCH TASKS AS RAISING ANIMALS, COOKING, WORKING IN THE FIELDS, CARRYING WATER OR SELLING FOOD, ETC.)

_____ (6)

141. How much time each week do you spend doing this?
(IT MAY BE NECESSARY TO ESTIMATE HOURS BY ASKING RESPONDENT WHEN SHE BEGINS AND FINISHES CERTAIN TASKS EACH DAY, I.E., USE "SUN TIME.")

_____hours _____ (7-8)

142. Of the things you need to do, which other task occupies the most time?

_____ (9)

143. How much time each week do you spend doing this?

_____hours _____ (10-11)

144. Do you help with the farming?

_____1 No _____2 Yes _____ (12)

What tasks do you do?

_____

_____

_____ (13-17)

(LIST ADDITIONAL.)

CARD #18

145. Do you raise your own animals? (SPECIFICALLY WOMAN'S RESPONSIBILITY.)

_____1 No _____2 Yes _____ (18)

(IF YES, LIST KIND, NUMBER, AND THE PURPOSES FOR WHICH GROWN IN CHART BELOW.)

146.

Kind of Animal	How many?	How many for: Meat	Trade	Sell	Dairy or Poultry Products	Draft	
1.							(18-29)
2.							(30-41)
3.							(42-53)
4.							(54-65)
5.							(66-77)

CARD #19

147. Who in your family has the most to say about what crops to grow?

_____ (6)

148. Do you grow or raise anything to sell at the market?

_____1 No _____2 Yes _____ (7)

What things?	How often do you have some of this to sell?	
		(8-9)
		(10-11)
		(12-13)
		(14-15)

Does anyone work with you doing this?

_____1 No _____2 Yes _____ (16)

Who? (CATEGORY, I.E., DAUGHTER, NEIGHBOR, ETC.)

_____

_____ (17-18)

CARD #19

149. Do you make things (crafts or food) to sell at the market?

_____1 No _____2 Yes _____ (19)

150.

What things do you make?	How often do you have some of this to sell?	
		(20-21)
		(22-23)
		(24-25)
		(26-27)

151. Does anyone work with you? (PROBE FOR WOMEN'S COOPERATIVE ACTIVITIES.)

_____1 No _____2 Yes _____ (28)

Who?

_____

_____ (29-30)

What do they do?

_____

_____ (31-32)

152. Where is the market you go to most often?

_____ (33)

153. How far is the market?

_____ (34-35)

154. How often do you go?

_____ (36)

155. How do you get there? (WALKING OR TYPE OF TRANSPORTATION.)

_____ (37)

CARD #19

156. What things do you most often buy at the market?

Item	How much of this do you buy?	
		(38-39)
		(40-41)
		(42-43)

"NOW WE WOULD LIKE TO KNOW HOW THE CHILDREN HELP THE FAMILY."

157. What work do the children help with the most?
(INCLUDE COOKING, CARRYING WATER, HERDING AND FARM JOBS.)

Task	Sex	Age	How much of this task do they do?	Alone or with whom?	
					(44-49)
					(50-55)
					(56-61)
					(62-67)

158. Do you usually nurse your children or bottle-feed them?

_____1 Nurse _____2 Bottle-feed (68)

159. How many did you nurse?

_____ (69)

Why did you prefer this?

_____ (70)

160. How many did you bottle feed?

_____ (71)

Why did you prefer this?

_____ (72)

CARD #19

161. Who do you usually ask for advice when you have a problem about: (PROBE FOR CATEGORY OF PERSON, I.E., RELATIVE, FRIEND, NEIGHBOR, DOCTOR, ETC.)

Food?	_____	_____ (73)
Illness?	_____	_____ (74)
Family matters?	_____	_____ (75)
Farming?	_____	_____ (76)
Animals?	_____	_____ (77)
Other:		
_____	_____	_____ (78)
_____	_____	_____ (79)

CARD #20

C. Food Attitudes of Woman Head or Spouse of Male Head:

"NOW I WOULD LIKE TO ASK YOU SOME THINGS ABOUT WHAT FOODS YOU EAT AND WHAT KINDS OF FOOD YOU LIKE."

(24-HOUR RECALL: ASK RESPONDENT TO RECALL HER FOOD INTAKE FOR THE DAY PREVIOUS TO THE INTERVIEW.)

162. Day of week of recall:

_____1 Monday

_____2 Tuesday

_____3 Wednesday

_____4 Thursday

_____5 Friday

_____6 Saturday

_____7 Sunday _____ (6)

"I WOULD LIKE YOU TO TELL ME EVERYTHING YOU ATE AND DRINK FROM THE TIME YOU GOT UP IN THE MORNING YESTERDAY UNTIL YOU WENT TO BED AT NIGHT. PLEASE MENTION EVERYTHING YOU ATE OR DRANK AT HOME, AT WORK AND AWAY FROM HOME. INCLUDE SNACKS AND DRINKS OF ALL KINDS. I ALSO NEED TO KNOW WHERE YOU ATE THE FOOD, AND NOW LET US BEGIN."

163. What time did you get up yesterday?

_____ _____ (7)

164. Was it the usual time?

_____1 No _____2 Yes _____ (8)

165. What was the first time you ate or had anything to drink yesterday morning? (LIST ON THE FOOD INTAKE FORM THAT FOLLOWS.)

166. Where did you eat? (LIST ON FORM.)

167. Now would you tell me what you had to eat and how much? (LIST ON FORM.)

CARD #20

(CONTINUE WITH FORM, OCCASIONALLY ASKING, "WHEN DID YOU EAT AGAIN?" OR, "IS THERE ANYTHING ELSE?")

168. Did you have anything to eat or drink during the night?

_____1 No _____2 Yes _____ (9)

(LIST FOOD AND AMOUNT ON FORM.)

169. Was your food intake yesterday unusual in any way?

_____1 No _____2 Yes _____ (10)

Why?

_____ _____ (11)

In what way?

_____ _____ (12)

CARD #20

24-HOUR FOOD INTAKE FORM

Time	Where eaten	Food (or drink)	Type and/or preparation	Amount	Food Code	Amount Code

CARD #21

170. Do all the members of your family eat together?
(GET DESCRIPTION OF EATING HABITS: DO MEN, WOMEN & CHILDREN EAT AT SAME PLACE AND TIME? IF NOT, WHAT CUSTOMS DO THEY OBSERVE?)

_____ (6-9)

171. Who decides what the family is going to eat?

_____ (10)

172. What kinds of foods do you like best?

_____ (11-15)

173. Do you have special foods when visitors come?

_____1 No _____2 Yes _____ (16)

What foods?

_____

_____

_____ (17-19)

174. Does everyone eat together when visitors come? (DESCRIBE CUSTOMS.)

_____ (20-22)

CARD #21

175. In your opinion, are there foods that are best for adults?

_____1 No _____2 Yes _____ (23)

176. What are these?

_____

_____

_____ (24-28)

177. Why are these best?

_____ (29-30)

178. What foods are best for babies?

_____

_____

_____ (31-35)

179. Why are these best?

_____ (36-37)

180. Are you able to give all these foods to your babies?

_____1 Yes _____2 No _____ (38)

181. Which are you unable to give them?

_____

_____

_____ (39-40)

CARD #21

182. In your opinion, are there foods that are best for children?

_____1 No _____2 Yes _____ (41)

183. What foods?

_____

_____

_____ (42-46)

184. Why are these best?

_____ (47-48)

185. Are you able to give all these foods to your children?

_____1 Yes _____2 No _____ (49)

186. Which are you unable to give them?

_____

_____

_____ (50-51)

187. Are there foods that are best for old people?

_____1 No _____2 Yes _____ (52)

188. Which ones?

_____

_____ (53-57)

189. Why are these best?

_____ (58-59)

CARD #21

190. In your opinion, what are the main causes of illness in your village?

_____ (60-61)

191. In your family?

_____ (62-63)

192. In your opinion, are there special foods that are best for sick persons?

_____1 No _____2 Yes _____ (64)

193. What are these foods?

_____

_____ (65)

194. In your opinion, are there certain foods that sick persons should avoid?

_____1 No _____2 Yes _____ (66)

195. What are these foods?

_____ (67)

196. Why are they bad?

_____ (68)

197. What foods are best for mothers that are nursing babies?

_____

_____ (69)

CARD #21

198. In your opinion, are there any foods that are bad for babies?

_____1 No _____2 Yes _____ (70)

199. What are these foods?

_____

_____ (71)

200. Why are they bad?

_____ (72)

201. How old should a baby be when its mother stops nursing it?

_____ (73)

202. At what age should children be given the same food that the parents eat?

_____ (74-75)

203. (ADDITIONAL COMMENTS ABOUT FOOD.)

(76)

(THANK RESPONDENT FOR HER COOPERATION AND MAKE ARRANGEMENTS FOR ANY RETURN VISITS THAT MAY BE NECESSARY.)

CARD #22

204. Do you do most of the cooking for your family?

_____1 No

If no, who does most of the cooking for the family? (RELATIONSHIP TO WIFE.)

_____

"MAY I SPEAK WITH HER ABOUT SOME OF THE DISHES SHE PREPARES?"

(THANK RESPONDENT FOR HER COOPERATION AND INTERVIEW PERSON WHO COOKS. GO TO QUESTION 205.)

_____2 Yes

(IF YES, GO TO QUESTION 208.)

_____ (6)

_____ (7)

PART III. SORGHUM FOODS AND THEIR PREPARATION.

205. What is your name? (IF NOT WIFE OR FEMALE HEAD.)

_____ (8-32)

206. What is your age?

_____ (33-34)

207. What is your relationship to the head of the house?

_____ (35)

(SORGHUM USES:)
208. Do you use sorghum for food?

_____1 No

(IF NO, ASK QUESTIONS 209-212.)

_____2 Yes

(IF YES, GO TO QUESTION 213.)

_____ (36)

CARD #22

209. Would you be interested in using sorghum for food?

_____1 No

_____2 Yes _____ (37)

210. If no, why not?

_____

_____ _____ (38-39)

(GO TO QUESTION 248 IF RESPONDENT IS OTHER THAN SPOUSE OF HEAD OR FEMALE HEAD. IF SPOUSE OR FEMALE HEAD, CONCLUDE INTERVIEW.)

211. If yes, why would you be interested in using it?

_____

_____ _____ (40)

212. Why do you not now use it?

_____

_____ _____ (41)

(GO TO QUESTION 248 IF RESPONDENT IS OTHER THAN SPOUSE OF HEAD OR FEMALE HEAD. IF SPOUSE OR FEMALE HEAD, CONCLUDE INTERVIEW.)

213. How do you use the sorghum?

_____Tortillas _____ (42)

_____Pepusa _____ (43)

_____Soup _____ (44)

_____Chicha _____ (45)

_____Other (SPECIFY.) _____ (46)

_____ _____ (47)

_____ _____ (48)

CARD #22

214. How much of the sorghum you use is used for making each of these? (ESTIMATE PERCENTAGE.)

_____Tortillas _____ (49-51)

_____Pepusa _____ (52-53)

_____Soup _____ (54-55)

_____Chicha _____ (56-57)

_____Other (SPECIFY) _____ (58-59)

_____ _____ (60-61)

_____ _____ (62-63)

215. What is the main reason that you use sorghum for food?

_____1 No other alternative

_____2 Cheaper than other foods

_____3 Prefer it to other foods

_____4 Sorghum foods keep better

_____5 Like it

_____6 Other reasons (SPECIFY:) _____ (64)

_____ _____ (65-66)

216. How often does your family use sorghum for food?

_____1 Daily

_____2 Every few days

_____3 Weekly

_____4 Special occasions

_____5 Other (SPECIFY.) _____ (67)

_____ _____ (68)

CARD #22

217. Which of these kinds of foods do you like best, foods made with:

____corn	or	____wheat?	_____ (69)
____sorghum	or	____corn?	_____ (70)
____rice	or	____beans?	_____ (71)
____wheat	or	____sorghum?	_____ (72)
____beans	or	____wheat?	_____ (73)
____corn	or	____beans?	_____ (74)
____sorghum	or	____rice?	_____ (75)
____rice	or	____corn?	_____ (76)
____beans	or	____sorghum?	_____ (77)
____wheat	or	____rice?	_____ (78)

CARD #23

218. Do you prepare dishes in which sorghum is mixed with other cereals or beans?

_____1 No _____2 Yes _____ (6)

Which foods is it mixed with?

_____1 Wheat

_____2 Maize

_____3 Beans

_____4 Barley

_____5 Other (SPECIFY.) _____ (7-11)

_____

_____ _____ (12-13)

(NOTE PROPORTIONS IN RECIPE SUPPLEMENT.)

CARD #23

219. Do you prepare dishes in which sorghum is mixed with other types of food?

_____1 No _____2 Yes _____ (14)

Which of these foods is it mixed with?

_____1 Meat

_____2 Fish

_____3 Eggs

_____4 Milk

_____5 Vegetables

_____6 Other (SPECIFY) _____ (15-20)

_____ _____ (21-22)

220. How do you use these different kinds of sorghum? (SHOW RESPONDENT SAMPLES OF LOCAL SORGHUM VARIETIES AND LIST THEIR USES.)

Variety (USE LOCAL NAMES)	Color	Texture	Lustre	Other	How Used	
1						(23-28)
2						(29-34)
3						(35-40)
4						(41-46)
5						(47-52)

221. Which variety of sorghum do you prefer?

_____ _____ (53)

CARD #23

222. Why do you prefer this variety, for its

_____1 color?

_____2 softness?

_____3 lustre?

_____4 hardness?

_____5 taste?

_____6 other? (SPECIFY) _____ (54)

_____ _____ (55)

223. Do you buy sorghum, prepared tortillas, and/or masa?

_____1 No _____2 Yes _____ (56)

Which do you buy?

_____sorghum

_____tortillas

_____masa _____ (57-59)

224. Where do you get your water for cooking?

_____ _____ (60)

If not piped into the house, how far is it to the source of water?

_____ _____ (61-62)

How do you bring the water home?

_____ _____ (63)

How do you store it?

_____ _____ (64)

CARD #23

(PREPARATION OF SORGHUM TORTILLAS:)

225. Do you make sorghum tortillas?

_____1 No

(IF NO, GO TO QUESTION 247. ASK RESPONDENT ABOUT OTHER SORGHUM RECIPES.)

_____2 Yes

"WE WOULD LIKE TO LEARN SOMETHING ABOUT HOW YOU MAKE SORGHUM TORTILLAS. MAY WE WATCH YOU MAKE THEM? (OBSERVE, DESCRIBE, AND PHOTOGRAPH COOKING EQUIPMENT AND METHODS. CONTINUE WITH QUESTION 226.)

_____ (65)

226. Where do you get your alkali?

_____ (66)

227. How much alkali do you use? (ESTIMATE PROPORTIONS.)

_____ (67-68)

228. Do you steep the sorghum in the alkali and water?

_____1 No _____2 Yes

_____ (69)

229. How long is the alkali and sorghum mixture cooked?

_____ (70-71)

230. What kind of container is it cooked in?
(ESPECIALLY NOTE IF ANY IRON VESSELS ARE USED.)

_____ (72)

231. Do you wash the cooked sorghum?

_____1 No _____2 Yes

_____ (73)

CARD #24

(GRINDING: OBSERVE GRINDING EQUIPMENT IN DETAIL AND PHOTOGRAPH.)

232. Do you grind the sorghum at home or have a mill do it for you?

_____1 At home

_____2 Commercial mill (includes small electric or gasoline mill at neighborhood store.

_____3 Other (SPECIFY) _____ (6)

↓

_____

_____ (7-8)

233. If at home, what equipment do you use?

_____1 Hand grinder

_____2 Stone

_____3 Other (DESCRIBE.) _____ (9)

↓

_____

_____ (10-11)

234. (INTERVIEWER: ASCERTAIN WHETHER OR NOT SORGHUM IS IN CONTACT WITH IRON AT ANY TIME DURING GRINDING.)

_____ (12)

235. In your opinion, what method is best for grinding sorghum?

_____ (13)

236. ↓ Why is this method best?

_____ (14)

237. (OBSERVE FINENESS OF GROUND NIXTAMAL FROM SORGHUM AND DESCRIBE:)

_____ (15-16)

CARD #24

(CHARACTERISTICS OF TORTILLAS.)

238. (MEASURE THICKNESS AND DIAMETER.)

Thickness:_____cm. _____ (17-18)

Diameter:_____cm. _____ (19-20)

239. Do the tortillas puff?

_____1 No _____2 Yes _____ (21)

(DESCRIBE:)

_____

_____ _____ (22)

240. (ASK RESPONDENT ABOUT PHYSICAL CHARACTERISTICS.)

Color:

External_____ _____ (23)

Internal_____ _____ (24)

Texture:_____ _____ (25)

Shape:_____ _____ (26)

Flexibility:_____ _____ (27)

241. (ASK RESPONDENT ABOUT SENSORIAL CHARACTERISTICS.)

Aroma:_____ _____ (28)

Flavor:_____ _____ (29)

Feeling after swallowing(does sorghum feel heavy?):_____

_____ _____ (30)

Other (comments):_____

_____ _____ (31)

242. How often are tortillas made?

_____ (32)

CARD #24

243. How are tortillas stored?

_____ (33)

244. How long are they kept?

_____ (34)

245. Do you have problems after or during storage of tortillas?

_____1 No _____2 Yes _____ (35)

What problems?

_____

_____ (36-37)

246. Which keep longer, sorghum or maize tortillas?

_____1 Sorghum

_____2 Maize

_____3 No difference _____ (38)

247. (RECIPES: COLLECT AS MANY RECIPES FOR SORGHUM FOODS AS POSSIBLE. USE ATTACHED SUPPLEMENTARY DATA SHEETS.)

(IF PERSON WHO DOES MOST OF THE COOKING IS OTHER THAN THE WIFE OF THE HOUSEHOLD HEAD OR THE FEMALE HEAD, IT WILL BE NECESSARY TO ASK HER THE FOLLOWING FOOD ATTITUDE QUESTIONS. IF PERSON HAS ALREADY ANSWERED SUCH QUESTIONS, THANK HER FOR HER COOPERATION AND MAKE ARRANGEMENTS FOR ANY RETURN VISITS THAT MAY BE NECESSARY TO OBSERVE COOKING METHODS, OBTAIN RECIPES, ETC.)

CARD #25

B. Food Attitudes:
(TO BE ANSWERED BY PERSON DOING THE COOKING IF NOT WIFE OF HEAD OR FEMALE HEAD.)

"NOW I WOULD LIKE TO ASK YOU SOME THINGS ABOUT WHAT FOODS YOU EAT AND WHAT KINDS OF FOOD YOU LIKE."

(24-HOUR RECALL: ASK RESPONDENT TO RECALL HER FOOD INTAKE FOR THE DAY PREVIOUS TO THE INTERVIEW.)

Day of week of recall:

_____1 Monday

_____2 Tuesday

_____3 Wednesday

_____4 Thursday

_____5 Friday

_____6 Saturday

_____7 Sunday _____ (6)

"I WOULD LIKE YOU TO TELL ME EVERYTHING YOU ATE AND DRANK FROM THE TIME YOU GOT UP IN THE MORNING YESTERDAY UNTIL YOU WENT TO BED AT NIGHT. PLEASE MENTION EVERYTHING YOU ATE OR DRANK AT HOME, AT WORK AND AWAY FROM HOME. INCLUDE SNACKS AND DRINKS OF ALL KINDS. I ALSO NEED TO KNOW WHERE YOU ATE THE FOOD, AND NOW LET US BEGIN."

248. What time did you get up yesterday?

_____ _____ (7)

249. Was it the usual time?

_____1 No _____2 Yes _____ (8)

250. What was the first time you ate or had anything to drink yesterday morning? (LIST ON THE FOOD INTAKE FORM THAT FOLLOWS.)

251. Where did you eat? (LIST ON FORM.)

252. Now would you tell me what you had to eat and how much? (LIST ON FORM.)

CARD #25

(CONTINUE WITH FORM, OCCASIONALLY ASKING, "WHEN DID YOU EAT AGAIN?" OR, "IS THERE ANYTHING ELSE?")

253. Did you have anything to eat or drink during the night?

_____1 No _____2 Yes _____ (9)

(LIST FOOD AND AMOUNT ON FORM.)

254. Was your food intake yesterday unusual in any way?

_____1 No _____2 Yes _____ (10)

Why?

_____ _____ (11)

In what way?

_____ _____ (12)

CARD #25

24-HOUR FOOD INTAKE FORM

Time	Where eaten	Food (or drink)	Type and/or preparation	Amount	Food Code	Amount Code

CARD #26

255. Do all the members of your family eat together?
(GET DESCRIPTION OF EATING HABITS: DO MEN, WOMEN & CHILDREN EAT AT SAME PLACE AND TIME? IF NOT, WHAT CUSTOMS DO THEY OBSERVE?)

_____ (6-9)

256. Who decides what the family is going to eat?

_____ (10)

257. What kinds of foods do you like best?

_____ (11-15)

258. Do you have special foods when visitors come?

_____1 No _____2 Yes _____ (16)

What foods?

_____

_____

_____ (17-19)

259. Does everyone eat together when visitors come? (DESCRIBE CUSTOMS.)

_____ (20-22)

CARD # 26

260. In your opinion, are there foods that are best for adults?

_____1 No _____2 Yes _____ (23)

261. What are these?

_____

_____

_____ (24-28)

262. Why are these best?

_____ (29-30)

263. What foods are best for babies?

_____

_____

_____ (31-35)

264. Why are these best?

_____ (36-37)

265. Are you able to give all these foods to your babies?

_____1 Yes _____2 No _____ (38)

266. Which are you unable to give them?

_____

_____

_____ (39-40)

CARD # 26

267. In your opinion, are there foods that are best for children?

_____1 No _____2 Yes _____ (41)

268. What foods?

_____

_____

_____ (42-46)

269. Why are these best?

_____ (47-48)

270. Are you able to give all these foods to your children?

_____1 Yes _____2 No _____ (49)

271. Which are you unable to give them?

_____

_____

_____ (50-51)

272. Are there foods that are best for old people?

_____1 No _____2 Yes _____ (52)

273. Which ones?

_____

_____ (53-57)

274. Why are these best?

_____ (58-59)

CARD # 26

275. In your opinion, what are the main causes of illness in your village?

_____ (60-61)

276. In your family?

_____ (62-63)

277. In your opinion, are there special foods that are best for sick persons?

_____1 No _____2 Yes _____ (64)

278. What are these foods?

_____

_____ (65)

279. In your opinion, are there certain foods that sick persons should avoid?

_____1 No _____2 Yes _____ (66)

280. What are these foods?

_____ _____ (67)

281. Why are they bad?

_____ (68)

282. What foods are best for mothers that are nursing babies?

_____

_____ (69)

CARD # 26

283. In your opinion, are there any foods that are bad for babies?

_____1 No _____2 Yes _____ (70)

284. What are these foods?

_____

_____ (71)

285. Why are they bad?

_____ (72)

286. How old should a baby be when its mother stops nursing it?

_____ (73)

287. At what age should children be given the same food that the parents eat?

_____ (74-75)

288. (ADDITIONAL COMMENTS ABOUT FOOD.)

_____ (76)

(THANK RESPONDENT FOR HER COOPERATION AND MAKE ARRANGEMENTS FOR ANY RETURN VISITS THAT MAY BE NECESSARY.)

SUPPLEMENTARY DATA

I. Environmental and Geographical Factors.

Obtain as much information as possible from appropriate government bureaus for the area where the research is being done. Include:

1. Maps where sorghum is grown.
2. Annual rainfall distribution.
3. Soil maps or information on texture, type, pH, nutrient deficiencies, etc., of soils in area.
4. Production data for the past 10 years. Include:
   a. No. Hectares planted.
   b. Total amount of sorghum and other crops grown.
   c. Yields (kg/ha) of crops.

II. Description of Village.

(As time permits) Describe village, number of houses, settlement pattern, population numbers, kinship networks, formal and informal leadership patterns and community decision-making processes. Document with photographs, maps, charts, and informant interviews.

III. Anthropometric Assessment.

Obtain anthropometric data for all children of village using simple easily conducted field tests. Include:

1. Household ID (from interview schedule.)
2. Child's name (from interview schedule.)
   a. Sex
   b. Date of birth (establish appropriate criteria if exact dates are not known, e.g., number of teeth, motor ability, family's seasonal activities at time of child's birth, etc.)
   c. Weight
   d. Height
   e. Arm circumference
   f. Head circumference
   g. Chest circumference
   h. Skin fold

IV. Clinical Assessment.

Assess physical signs indicative or suggestive of malnutrition. Simple techniques include judging the appearance of:

1. Hair
2. Face
3. Eyes
4. Lips
5. Tongue
6. Teeth
7. Gums
8. Skin
9. Nails

V. Food Recipes.

Collect as many recipes as possible from selected respondents. In addition to those using sorghum, others should be classified as to:

1. Basic ingredient
2. Ordinary food for daily use
3. Status food for respected guests
4. Special foods for treating disorders, lactating mothers, etc.
5. Special foods for fiestas and/or ceremonial occasions.

VI. Analysis and Assessment of Village Nutritional Status.

Analysis of nutritional components of the diets of the village population to evaluate extent and causes of insufficient nutrition if it exists. Special attention is to be given to the kinds and quantities of protein intake.

MAJOR GRAIN SORGHUM PANICLE TYPES

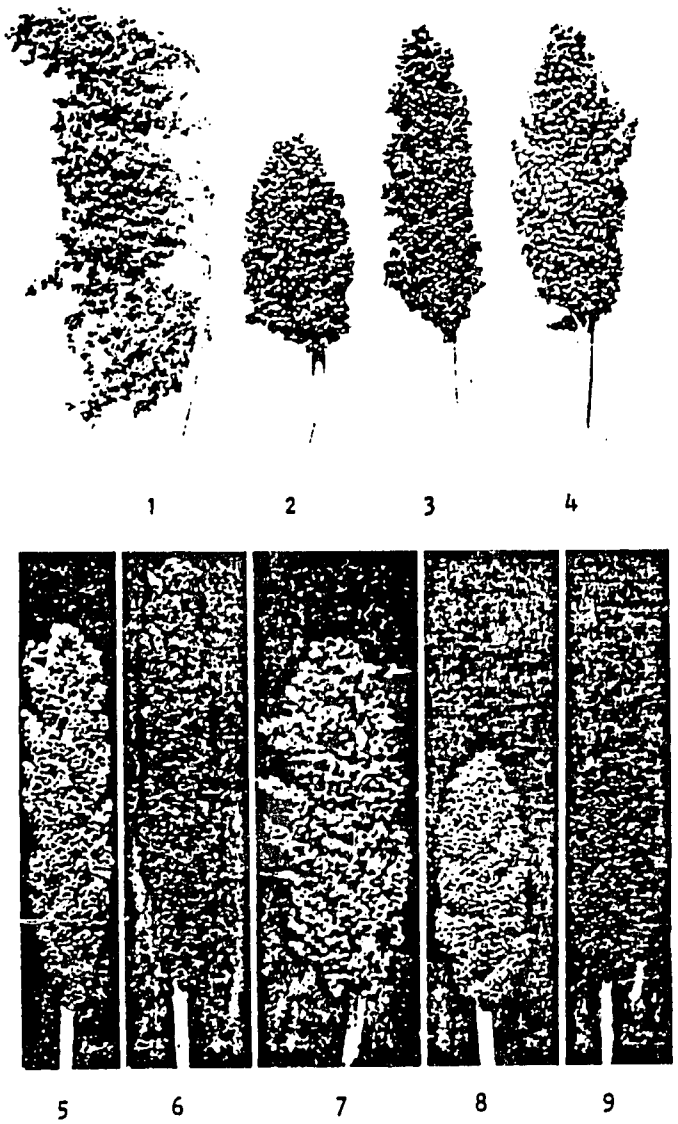

(CHOOSE MOST SIMILAR HEAD TYPE.)

From U. S. Public Road Adm. (1943).

Field test 1/	Sandy loam	Silt loam	Loam	Clay loam	Clay
Cast 2/	Cast bears careful handling without breaking	Cohesionless silt loam bears careful handling without breaking. Better graded silt loam casts may be handled freely without breaking	Cast may be handled freely without breaking	Cast bears much handling without breaking	Cast can be molded to various shapes without breaking
Thread 3/	Thick, crumbly, easily broken	Thick, soft, easily broken	Can be pointed as fine as pencil lead that is easily broken	Strong thread can be rolled to a pin point	Strong, plastic thread that can be rolled to a pin point
Ribbon 4/	Will not form ribbon	Will not form ribbon	Forms short, thick ribbon that breaks under its own weight	Forms thin ribbon that breaks under its own weight	Long, thin flexible ribbon that does not break under its own weight

1/ Soil wetted to give it a moisture content at which it is plastic

2/ Squeeze moist material in hand to form a lump. Judged by its toughness of resistance to breaking or crumbling.

3/ Made by rolling moist material between the palms of the hands.

4/ Formed by dra ing the index finger under the thumb and pinching the material to form a ribbon.

ENTREVISTA*

El consumo del sorgo y la nutrición en Honduras

(SE HABRA DE REALIZAR UN MUESTREO DE LA POBLACION EN LA ZONA MERIDIONAL DE HONDURAS DONDE SE CULTIVE EL SORGO (SORGHUM BICOLOR L. MOENCH). EL MUESTREO INCLUIRA TANTO LAS CASAS-HABITACIONES DE LOS PUEBLOS, COMO AQUELLAS DISPERSAS EN LA ZONA. ESTE CUESTIONARIO HA SIDO PREPARADO CON EL FIN DE RECABAR DATOS BASICOS Y SELECTOS RELACIONADOS A LOS FACTORES SOCIALES, NUTRICIONALES Y AGRONOMICOS EN EL CULTIVO DEL SORGO Y EN SU CONSUMO EN ESTA REGION DE HONDURAS.)

Fechas de las entrevistas: Entrevistador_____

Primera visita_____

Retorno_____

Retorno_____

Retorno_____

Finalización_____

(ENTREVISTADOR: PRESENTESE, DIGA DE DONDE ES, DE EL NOMBRE DE LA ENTIDAD HONDUREÑA CON LA CUAL ESTA TRABAJANDO, Y EXPLIQUE QUE ESTA VISITANDO ALGUNOS PUEBLOS EN ESTA ZONA DE HONDURAS PARA PODER APRENDER ALGO SOBRE EL SISTEMA DE CULTIVO Y SOBRE LA PREPARACION DE LOS ALIMENTOS EN ESTOS LUGARES. EXPLIQUE QUE QUISIERA SU COLABORACION Y QUE LE GUSTARIA HACERLES ALGUNAS PREGUNTAS ACERCA DE SUS FAMILIAS Y ACERCA DE ELLOS MISMOS.)

Datos

Boleta No. _____

Pueblo _____

Departamento _____

Ubicación en el pueblo((o en relación al pueblo.) _____

Otros datos _____

Nombre del jefe de familia _____

Nombre de la esposa del jefe de familia (o de la jefe de familia si no hubiera jefe de familia masculino.) _____

*Este no intenta ser un cuestionario rígido, sino servir de pauta para organizar las preguntas y observaciones de los investigadores, dentro de un marco de flexibilidad metodológica. Consecuentemente, el uso de este cuestionario es sometido a criterio.

(ENTREVISTADOR: ESTA ENCUESTA SERA UTILIZADA PARA RECOGER DATOS DE CADA ENTREVISTADO. AL MISMO TIEMPO, HABRA SECCIONES QUE SE UTILIZARAN ESPECIFICAMENTE CON CIERTOS MIEMBROS DE LA FAMILIA. POR EJEMPLO, SE COMPLETARA LO REFERENTE A LAS ACTIVIDADES AGRICOLAS EN LA SECCION PERTENECIENTE AL JEFE DE FAMILIA. SE LLENARA, ASI MISMO, LA INFORMACION RELATIVA A LA PREPARACION DE LOS ALIMENTOS EN LA SECCION QUE CORRESPONDA A AQUELLA PERSONA QUE LOS PREPARE, ETC. POSIBLEMENTE SEAN NECESARIAS VARIAS VISITAS A CADA CASA-HABITACION PARA PODER OBTENER LOS DATOS NECESARIOS. CONCERTE NUEVAS CITAS Y VISITAS CUANDO SEA NECESARIO. A FIN DE PODER OBTENER INFORMACION FIDEDIGNA, RECUERDE QUE HABRA QUE EVITAR EL AYUDAR A LOS ENTREVISTADOS CUANDO LA AYUDA QUE SE OFREZCA PUEDA INFLUIR EN EL CONTENIDO DE LAS RESPUESTAS.)

PRIMERA PARTE. ACTIVIDADES MASCULINAS

(PARA PREGUNTARSELE AL JEFE DE FAMILIA MASCULINO)

"PARA COMENZAR, QUISIERA PREGUNTARLE ALGUNOS DATOS SOBRE UD. Y SOBRE SU FAMILIA."

A. Datos sociales y familiares:

1. ¿Cuál es su estado civil?

_____1 Soltero

_____2 Viudo

_____3 Separado o divorciado

_____4 Otro

_____5 Casado

_____6 Unión libre

2. Sexo de la persona entrevistada:

_____1 Masculino _____2 Femenino

3. ¿Cuál es su edad?

_____

4. ¿Cuál es la edad de su esposa?

_____

5. ¿Cuál es el nombre de su esposa?

_____

_____

6. ¿Es Ud. el jefe de familia?

_____1 Sí _____2 No

7. ¿Qué parentezco tiene con el jefe de familia?

_____

8. ¿Cuántas personas viven en su casa? (INCLUYASE A LOS HIJOS, LOS NIETOS, LOS PADRES, Y TODAS LAS OTRAS PERSONAS.)

_____

9. ¿Cuántos de sus hijos viven actualmente en su casa con Ud.?

_____

10. ¿Cuántos de sus hijos no viven actualmente con Ud.?

_____

11. ¿Es decir, entonces, que Ud. tiene un total de _____ hijos vivos?

B. Datos ocupacionales masculinos:

"QUISIERA, AHORA, SABER ALGO ACERCA DE SU TRABAJO."

12. ¿Trabaja Ud. principalmente en la agricultura?

_____1 Sí

(SI ES SI, PASESE A LA PREGUNTA NUMERO 18.)

_____2 No

13. Si es no, ¿qué tipo de trabajo hace Ud.?

_____

14. ¿Dónde trabaja Ud.?

_____

15. ¿Cuántas horas por semana le dedica a este trabajo? (PARA PODER CALCULAR LAS HORAS, POSIBLEMENTE TENGA QUE PREGUNTARSELE AL ENTREVISTADO A QUE HORA SALE DE SU CASA, QUE SI AL AMANECER O ANTES, Y CUANTO TIEMPO LE TOMA LLEGAR AL TRABAJO; A QUE HORA SALE DEL TRABAJO, SI AL ATARDECER O MAS TARDE, ETC.)

_____horas

16. ¿Cultiva o siembra Ud. algo además?

_____1 No

(SI ES NO, PASESE A LA PREGUNTA 83, PAGINA 23.)

_____2 Sí

17. Si sí siembra, ¿qué parte de este trabajo lo hace Ud. mismo? (TRATE DE AVERIGUAR LA IMPORTANCIA RELATIVA PARA EL ENTREVISTADO DE ESTE TRABAJO AGRICOLA A TIEMPO PARCIAL.)

_____

_____

_____

(CONTINUESE CON LA PREGUNTA 18.)

18. ¿Qué tipo de labores tiene que hacer en su trabajo de campo?

Labores	Algunas de estas labores se tienen que hacer en ciertas épocas del año. ¿Cuántas horas por semana le dedica Ud. a cada labor cuando toca? (CALCULE SEGUN LAS RESPUESTAS.)
_____1 Preparar la tierra, cortar, quemar	
_____2 Preparar la tierra, azadonar	
_____3 Arar	
_____4 Plantar	
_____5 Cultivar	
_____6 Cosechar	
_____7 Trillar	
_____8 Otra (ESPECIFIQUE)	

19. ¿Cría Ud. animales?

_____1 No _____2 Sí

(SI ES SI, DESCRIBA CUALES ANIMALES, LA CANTIDAD, SU ALIMENTO, Y PARA QUE LOS CRIAN, EN EL CUADRO QUE SIGUE.)

20.

	Animal (qué clase)	Cantidad	¿Con qué los alimenta?	¿Con qué fin cría Ud. estos animales? Indique cuántos son para: Carne	Canjear	Vender	Productos lácteos o de granja	Tracción animal
1.								
2.								
3.								
4.								
5.								
6.								
7.								

(CONTINUESE LA LISTA SI FUERA NECESARIO)

21. ¿Qué cosas siembra Ud.?
(INCLUYASE CEREALES, LEGUMBRES, TUBERCULOS, VEGETALES Y FRUTAS.)

Cereales:	¿De qué tamaño es la parcela dónde se siembra?	¿Cuánto rindió este cultivo en la última siembra?	¿Fue una buena o una mala cosecha?
1.			
2.			
3.			
4.			
5.			
Legumbres:			
1.			
2.			
3.			
4.			
Tubérculos, vegetales, y frutas:			
1.			
2.			
3.			
4.			
5.			
6.			
7.			

(ANOTE CUALQUIER OTRO CULTIVO DE CADA CATEGORIA QUE NO HAYA PODIDO SER INCLUIDO EN EL ESPACIO DISPONIBLE.)

22. ¿Siembra algo para vender o para canjear?

_____1 No

_____2 Sí

Si es sí, ¿cuáles son esos cultivos?

Cultivo:	¿Qué cantidad de ese cultivo vende? (CALCULE %)	canjea? (CALCULE %)
1.		
2.		
3.		
4.		

(SIGASE LA LISTA SI FUERA NECESARIO)

23. ¿Se siembra el sorgo en esta zona?

_____1 No

_____2 Sí

(SI ES SI, PASESE A LA PREGUNTA 27.)

24. Si es no, ¿le interesaría sembrar sorgo para usarse como comida?

_____1 No

25. Si es no, ¿me podría decir por qué no le interesaría?

_____

_____

_____

(PASESE A LA PREGUNTA 73, PAGINA 19.)

_____2 Sí

26. Si le interesa, ¿me podría decir algunas de las razones por las cuáles tiene interés en sembrar sorgo para usarse como comida?

_____

_____

_____

(PASESE A LA PREGUNTA 73, PAGINA 19.)

27. ¿Cuáles son las variedades de sorgo que se cultivan en esta zona? (ENSEÑELE AL ENTREVISTADO MUESTRAS DE SORGO. APUNTE EL NOMBRE QUE EL ENTREVISTADO LE DA A LA VARIEDAD.)

_____ 1

_____ 2

_____ 3

_____ 4

_____ 5

_____ 6

28. ¿Me podría decir para qué se usa principalmente el sorgo en esta región?

Para:

_____ 1 comer

_____ 2 alimentar a los animales

_____ 3 forraje

_____ 4 la venta

_____ 5 otro uso (ESPECIFIQUE, INCLUYA OTROS PRODUCTOS SECUNDARIOS QUE SE SAQUEN DE LA PLANTA)

29. ¿Cuáles son algunos de esos otros usos?

_____

_____

_____

30. ¿Y Ud., siembra sorgo?

_____ 1 No

_____ 2 Sí

31. Si no siembra, ¿por qué no?

_____

_____

(PASESE A LA PREGUNTA 73, PAGINA 19.)

(SI ES SI, CONTINUESE CON LA PREGUNTA 32)

32. ¿Me podría decir por cuáles razones cultiva Ud. el sorgo?
(AVERIGUE EL VALOR RELATIVO DEL CULTIVO PARA EL ENTREVISTADO.)

33. ¿De dónde consigue la semilla?

_____1 Guardándola de cada cosecha.

_____2 Comprándola.

_____3 De otra manera. (ESPECIFIQUE)

_____

34. ¿Qué parte del sorgo que Ud. cultiva se usa para:
(CALCULE EL %)

comer?_____

alimentar a los animales?_____

forraje?_____

vender?_____

otro fin?_____

35. ¿Siembra el sorgo mezclado con otro cultivo?

_____1 No _____2 Sí

36. ¿Qué cultivos?

_____1 Maíz

_____2 Frijoles

_____3 Otros (ESPECIFIQUE)

_____

_____

(OBSERVACIONES EN EL CAMPO DE LAS PRACTICAS DE CULTIVO DEL SORGO. LA INFORMACION RELATIVA A LAS PREGUNTAS 38 A 72 DEBE SER OBTENIDA POR MEDIO DE UNA COMBINACION DE OBSERVACIONES, MEDICIONES, E INTERROGATORIOS.)

38. (¿PRACTICA EL ENTREVISTADO EL CULTIVO MEZCLADO -INTERCROPPING- O EL MONOCULTIVO?)

_____1 Mezcla → (CONTINUESE CON LAS PREGUNTAS 39 A 50.)

_____2 Solo → (PASESE A LAS PREGUNTAS 51 A 59.)

(SISTEMA DE INTERCROPPING:)

39. (CANTIDAD DE TIERRA PLANTADA DE SORGO:) (DETERMINESE POR MEDIO DE INSPECCION FISICA.)

_____hectáreas

40. (CULTIVO SEMBRADO CON EL SORGO:)

_____ Maíz

_____ Frijoles (ANOTE LA VARIEDAD) →

_____

_____ Otros (ESPECIFIQUE) →

_____

_____

41. (ESPACIAMIENTO DE SEMBRIOS, SI SE SIEMBRA EN HILERAS:) (MIDASE)

Ancho de las hileras_____cm.

Distancia entre las plantas (promedio)_____cm.

42. (DENSIDAD DEL SORGO SI NO SE SIEMBRA EN HILERAS:) (CUENTE EL NUMERO DE PLANTAS POR PIE CUADRADO.)

_____plantas por pie cuadrado

43. (LOMAS DE LAS HILERAS:) (MIDASE)

_____1 No hay lomas

_____2 Lomas bajas, altura_____cm.

_____3 Lomas altas, altura_____cm.

44. ¿En qué mes siembra Ud. el sorgo?

_____

¿En la primera o en la segunda quincena?

_____

45. ¿En qué mes siembra Ud. el otro cultivo?

_____

¿En la primera o en la segunda quincena?

_____

46. ¿En qué mes cosecha Ud. el sorgo?

_____

¿En la primera o en la segunda quincena?

_____

47. ¿En qué mes cosecha Ud. el otro cultivo?

_____

¿En la primera o en la segunda quincena?

48. (RENDIMIENTO PROMEDIO PARA AMBOS CULTIVOS:) (CALCULE ESTAS CANTIDADES SEGUN EL TAMAÑO DE LAS PARCELAS Y DE ACUERDO A LAS CATEGORIAS USADAS POR EL ENTREVISTADO.)

Sorgo_____

Otro cultivo_____

49. (TIPO DE SORGO QUE SE SIEMBRA:)

Variedad local_____
(SEGUN LA CLASIFICACION DE LA PREGUNTA 27.)

Tipo de panoja_____
(ELIJASE EMPAREJANDOLA CON ALGUN TIPO DE PANOJA NUMEROS 1-9 ENCONTRADOS EN EL CUADRO ADJUNTO)

Altura de la planta_____metros

50. (SUELO EN EL QUE SE SIEMBRA EL SORGO Y EL OTRO CULTIVO:) (DE SOLAMENTE EL TIPO PREDOMINANTE.)

Textura: (HAGASE PRUEBAS SIMPLES EN EL CAMPO DE LA MANERA DESCRITA EN EL CUADRO ADJUNTO.)

_____1 Franco arenoso

_____2 Franco limoso

_____3 Franco

_____4 Franco arcilloso

_____5 Otro (ESPECIFIQUE O COMENTE)

_____

Acidez del suelo: (USE EL EQUIPO "SOILTEX" PARA LA PRUEBA.)

_____

(PASESE A LA PREGUNTA 60.)

(SISTEMA DE MONOCULTIVO:)

51. (CANTIDAD DE TIERRA PLANTADA DE SORGO:) (DETERMINE POR MEDIO DE INSPECCION FISICA.)

_____hectáreas

52. (DISTANCIAMIENTO DE SEMBRIOS DE SORGO QUE SE SIEMBRA SOLO Y EN HILERAS:) (MIDASE)

Ancho de las hileras_____cm.

Distancia entre las plantas de las hileras (promedio)_____cm.

53. (DENSIDAD DEL SORGO QUE NO SE SIEMBRA EN HILERAS:) (CUENTE EL NUMERO PROMEDIO DE PLANTAS POR PIE CUADRADO.)

_____plantas por pie cuadrado

54. (LOMAS:) (MIDASE)

_____1 No hay lomas

_____2 Lomas bajas, altura_____cm.

_____3 Lomas altas, altura_____cm.

55. ¿En qué mes se planta el sorgo? (PREGUNTELE AL ENTREVISTADO.)

_____

¿En la primera o en la segunda quincena?

_____

56. ¿En qué mes se cosecha el sorgo?

_____

¿En la primera o en la segunda quincena?

_____

57. (RENDIMIENTO PROMEDIO PARA EL SORGO QUE SE SIEMBRA SOLO:) (CALCULE EL RENDIMIENTO SEGUN EL TAMAÑO DE LA PARCELA Y DE ACUERDO A LAS CATEGORIAS QUE EL ENTREVISTADO USE.)

_____

58. (TIPO DE SORGO QUE SE SIEMBRA:)

Variedad local_____
(SEGUN LA CLASIFICACION DE LA PREGUNTA 27.)

Tipo de panoja_____
(ELIJASE EMPAREJANDOLA CON ALGUN TIPO DE PANOJA (NUMEROS 1 AL 9) ENCONTRADOS EN EL CUADRO ADJUNTO.)

Altura de la planta_____metros

59. (TIPO DE SUELO EN EL QUE SE SIEMBRA EL SORGO:) (DE EL TIPO PREDOMINANTE, SOLAMENTE.)

Textura del suelo: (HAGASE PRUEBAS SIMPLES EN EL CAMPO DE LA MANERA DESCRITA EN EL CUADRO ADJUNTO.)

_____ 1 Franco arenoso

_____ 2 Franco limoso

_____ 3 Franco

_____ 4 Franco arcilloso

_____ 5 Otro (ESPECIFIQUE O COMENTE)

Acidez del suelo: (USESE EL EQUIPO "SOILTEX" PARA ESTA PRUEBA.)

_____

(CONTINUESE CON LA PREGUNTA 60.)

60. ¿Qué piensa hacer con el sorgo que tiene plantado ahora?

Es para:		¿Qué cantidad va a usar?
_____	alimentar a los animales	_____
_____	vender	_____
_____	consumo humano	_____
_____	otro fin (ESPECIFIQUE) ↓ _____	_____

61. ¿Piensa Ud. almacenar el sorgo que tiene plantado ahora?

_____1 No

_____2 Sí
↓
¿Por cuánto tiempo?

_____

62. ¿Cuántas cosechas de sorgo siembra al año?

_____1 Una

_____2 Más de una
↓
Si es más de una, ¿cuántas?

_____
↓
¿Cuánto tiempo después de plantar un cultivo de sorgo vuelve a plantar otro?

_____
↓
¿Cada cuánto tiempo se cosecha el sorgo?

_____

63. ¿Tiene dificultades con los insectos en el cultivo del sorgo?

_____1 No

_____2 Sí

Si tiene, ¿podría describir cuánto daño hacen?

_____

_____

_____

(ANOTESE ESPECIALMENTE LA EXISTENCIA DE SINTOMAS DE MOSQUITA DE LA PANOJA Y DE GUSANO SOLDADO)

64. ¿Tiene dificultades con las enfermedades en el cultivo del sorgo?

_____1 No

_____2 Sí

Si tiene, ¿podría describir cuánto daño hacen?

_____

_____

_____

(ANOTESE ESPECIALMENTE LA EXISTENCIA DE SINTOMAS DE CECINILLA)

65. ¿Hay daño causado por las aves?

_____1 No

_____2 Sí

¿Cuánto se pierde? (TRATE DE AVERIGUAR EL PORCENTAJE DE PERDIDA, ADEMAS DE LAS COMPARACIONES ENTRE PORCENTAJES, SI ES QUE SE SIEMBRAN DIFERENTES VARIEDADES.)

_____

_____

_____

_____

66. ¿Hay daño causado por otros animales? (INCLUYASE A LOS ROEDORES.)

_____1 No

_____2 Sí

¿Cuáles son los animales que dañan su cosecha?

_____

_____

_____

¿Cuánto daño hacen?

_____

_____

_____

67. ¿Cómo almacena Ud. la cosecha de sorgo?
(OBSERVE, FOTOGRAFIE, Y DESCRIBA LAS DIVERSAS FORMAS DE ALMACENAMIENTO.)

68. ¿Qué problemas tiene con el almacenamiento? (CON LOS INSECTOS, LOS ROEDORES, LA HUMEDAD, ETC.)

69. ¿Hay algunas variedades de sorgo que se puedan guardar mejor que otras?

_____1 No _____2 Sí

¿Qué clases de sorgo se pueden guardar mejor?

_____

_____

_____

¿Por qué se pueden guardar mejor?

_____

_____

70. ¿Necesita Ud. usar fertilizantes en el sorgo que está en crecimiento?

_____1 No _____2 Sí

¿Qué clase de fertilizante usa Ud.?

_____

_____

71. (PRACTICAS DE CULTIVO DEL SORGO: LABORES AGRICOLAS, HERRAMIENTAS Y EQUIPOS, GRUPOS DE TRABAJO Y PLANEAMIENTO. FOTOGRAFIE PARA DOCUMENTAR LA INFORMACION. ANOTE SI EL ENTREVISTADO DISPONE DEL USO DE BUEYES O DE ALGUNA OTRA FORMA DE TRACCION ANIMAL.)

"QUISIERA HACERLE ALGUNAS PREGUNTAS SOBRE LOS METODOS QUE USA EN EL CULTIVO DEL SORGO."

Labor	¿Qué herramientas y equipos usa para esta labor?	¿Cuántas personas trabajan?	¿Quiénes son los que trabajan juntos en esta labor? (MIEMBROS DE FAMILIA, VECINOS, ALGUN NIÑO, ETC.)	¿En qué momento se hace esta labor?
1. Preparación de la tierra				
2. Arado (azadonar)				
3. Siembra				
4. Fertilizar				
5. Deshierbo				
6. Cosecha				
7. Trilla				
8. Transporte				
9. Almacenar				

(USESE PAGINAS ADICIONALES PARA COMPLETAR CON MAS DETALLE, SI FUERA NECESARIO.)

72. ¿Contrata a alguna persona para que ayude con algunas de estas tareas?

_____1 No _____2 Sí

¿Para cuál tarea?	Numero de personas contratadas	¿Cuánto se paga generalmente por este tipo de trabajo?	¿Quiénes son las personas que se contratan?

73. ¿Con quién intercambia ideas sobre los nuevos métodos de cultivar? (AVERIGUE LA CATEGORIA DE LA PERSONA O EL PARENTEZCO QUE TIENE CON EL ENTREVISTADO; POR EJEMPLO: EL EXTENSIONISTA, EL AGRICULTOR MAS CONOCIDO DE LA ZONA, EL VECINO, EL O LA COMPAÑERO(A), ETC. ANOTE MAS DE UNA PERSONA SI EL ENTREVISTADO DIERA VARIOS NOMBRES.)

74. ¿A qué persona le hace Ud. más caso (le escucha más sus ideas) cuando se trata de hablar de métodos agrícolas? (DE LA CATEGORIA DE LA PERSONA.)

75. ¿Quién es la persona que se interesa más en decidir los cultivos que se van a sembrar, Ud., o alguna otra persona?

_____1 Yo mismo _____2 Otra persona

¿Quién es esa persona?

_____
(CATEGORIA O PARENTEZCO)

76. ¿Hay alguna persona de su familia que vaya a cazar?

_____1 No _____2 Sí

¿Quién va?

¿Cada cuánto tiempo van de caza?

¿Qué es lo que cazan?

¿En qué época del año van de caza?

77. ¿Hay alguna persona en su familia que vaya de pesca?

_____1 No _____2 Sí

¿Quién va?

¿Cada cuánto tiempo van a pescar?

¿En qué época del año van a pescar?

(TENENCIA DE LA TIERRA Y PRACTICAS CULTURALES EN GENERAL: EL ENTREVISTADOR DEBERA OBSERVAR Y DESCRIBIR EN GENERAL LAS TECNICAS AGRICOLAS. ESTA INFORMACION SE PODRA CONSEGUIR POR MEDIO DEL USO DE PREGUNTAS INDIRECTAS Y DEL USO DE MEDICIONES. CONVENDRA, ASI MISMO, QUE TOME FOTOGRAFIAS DE LA MAYOR CANTIDAD POSIBLE DE ACTIVIDADES.)

78. Número de parcelas que siembra la familia:

_____

79. Tamaño de las parcelas:

_____

_____

_____

_____

_____

_____

_____

_____

_____

_____

(CONTINUESE SI FUERA NECESARIO)

80. Formas de tenencia de la tierra:

	Número de parcelas
_____Propietario	_____
_____Aparcero	_____
_____Arrendatario	_____
_____En operativa	_____
_____Otra (DESCRIBA)	_____

_____

81. Métodos de preparación de la tierra:
(DESCRIBANSE LAS TECNICAS QUE SE USEN PARA LIMPIAR LAS PARCELAS ADEMAS DE EXPLICAR LA MANERA EN QUE SE PREPARE EL TERRENO PARA SEMBRAR, ANOTANDOSE SI SE HACE A MANO, O CON ARADO Y TRACCION ANIMAL. SI SE USASEN TRACTORES, ANOTE EL TAMAÑO DEL TRACTOR.)

82. ¿Usa Ud. fertilizantes?

_____1 No _____2 Sí

Clases de fertilizantes que se usan:

_____

_____

_____

_____

Prácticas de barbechado:

_____Rotación de la tierra

_____Rotación de los cultivos

¿Qué cultivos? (HAGASE UNA LISTA EN SEQUENCIA.)

_____

_____

_____

_____

_____ Cultivos permanentes

_____ Otro (DESCRIBASE.)

_____

_____

C. Actitudes hacia la comida del sexo masculino:

"AHORA QUISIERA HACERLE ALGUNAS PREGUNTAS SOBRE LO QUE ACOSTUMBRA COMER Y SOBRE LAS COSAS QUE PREFIERE COMER."

(REPASO DE LAS COMIDAS DE LAS ULTIMAS 24 HORAS: PIDALE AL ENTREVISTADO QUE TRATE DE RECORDAR TODO LO QUE INGERIO EL DIA ANTERIOR A LA ENTREVISTA.)

83. Día de la semana en que se hace el repaso de comida:

_____1 lunes

_____2 martes

_____3 miércoles

_____4 jueves

_____5 viernes

_____6 sábado

_____7 domingo

"ME GUSTARIA QUE ME DIJERA TODO LO QUE COMIO Y BEBIO AYER, DESDE EL MOMENTO EN QUE SE LEVANTO EN LA MAÑANA HASTA QUE SE ACOSTO EN LA NOCHE. POR FAVOR DIGAME TODO LO QUE COMIO Y BEBIO EN CASA, EN EL TRABAJO, Y CUANDO ESTABA EN CUALQUIER OTRO LUGAR FUERA DE SU CASA. INCLUYA TODAS LAS BEBIDAS, LOS REFRIGERIOS QUE TOMO Y CUALQUIER COSA QUE COMIERA POR MAS PEQUEÑA QUE FUERA. TAMBIEN QUISIERA PREGUNTARLE LOS LUGARES EN LOS QUE TOMO ESTA COMIDA. ¿COMENZAMOS?"

84. ¿A qué hora se levantó ayer?

_____

85. ¿Es la hora en que se levanta siempre?

_____1 No _____2 Sí

86. ¿A qué hora probó su primer alimento ayer en la mañana, ya sea comida o bebida? (ANOTE TAMBIEN EN EL CUADRO DE ALIMENTOS INGERIDOS QUE SIGUE.)

87. ¿A dónde fue que probó ese alimento? (ANOTE EN EL CUADRO.)

88. ¿Me podría decir lo que fue que tomó y que cantidad hubo? (ANOTE EN EL CUADRO.)

(CONTINUE COMPLETANDO EL CUADRO, Y HAGA LAS SIGUIENTES PREGUNTAS DE CUANDO EN CUANDO:
¿Qué fue lo siguiente que comió? o ¿Hubo algo más para comer o beber?)

89. ¿Comió algo o tomó algo durante la noche?

_____1 No _____2 Sí

(ANOTE LA COMIDA Y LA CANTIDAD EN EL CUADRO.)

90. ¿Fueron los alimentos que tomó ayer diferentes de algún modo de los que toma generalmente?

_____1 No _____2 Sí

¿Por qué?

_____

¿De qué manera?

_____

CUADRO DE ALIMENTOS INGERIDOS DURANTE LAS 24 HORAS DEL DIA

Hora	Lugar donde lo comió	Comida (o bebida)	Tipo de comida y/o su preparación	Cantidad	Código para la comida	Código para la cantidad

91. ¿Comen juntos y a la vez todos los miembros de su familia? (CONSIGASE UNA EXPLICACION DE LOS HABITOS ALIMENTICIOS DE LA FAMILIA: SI LOS VARONES, LAS MUJERES Y LOS NIÑOS COMEN EN EL MISMO LUGAR Y AL MISMO TIEMPO, Y SI NO, LAS COSTUMBRES QUE PRACTICAN.)

92. ¿Quién decide lo que come la familia?

93. ¿Cuáles son las comidas que a Ud. más le gustan?

94. ¿Preparan comida especial cuando hay visitas?

_____1 No

_____2 Sí

¿Qué comidas preparan?

_____

_____

_____

95. ¿Cuando vienen visitas a comer, comen todos juntos con ellos? (DESCRIBASE LAS COSTUMBRES.)

96. En su opinión, ¿hay comidas que sean mejores para que coman los adultos?

_____1 No _____2 Sí

97. ¿Cuáles son?

_____

_____

_____

98. ¿Por qué serían las mejores?

_____

99. ¿Cuáles podrían ser las mejores comidas para que coman los bebés?

_____

_____

_____

100. ¿Por qué serían las mejores?

_____

101. ¿Tiene Ud. como darle de todas estas comidas a sus bebés?

_____1 Sí _____2 No

102. ¿Cuáles son las que no puede Ud. darles?

_____

_____

_____

103. En su opinión, ¿hay comidas que sean mejores para que coman los niños?

_____1 No _____2 Sí

104. ¿Cuáles son?

_____

_____

_____

105. ¿Por qué serían las mejores?

_____

106. ¿Tiene Ud. como darle de todas esta comidas a sus niños?

_____1 Sí _____2 No

107. ¿Cuáles no puede Ud. darles?

_____

_____

_____

108. ¿Hay comidas que sean mejores para que coma la gente anciana?

_____1 No _____2 Sí

109. ¿Cuáles serían?

_____

_____

110. ¿Por qué serían mejores?

_____

111. En su opinión, ¿cuáles serían las causas principales de las enfermedades que existan en su pueblo?

112. ¿Y las de su familia?

113. En su opinión, ¿hay algunas comidas que sean mejores para las personas enfermas?

_____1 No _____2 Sí

114. ¿Cuáles son esas comidas?

_____

_____

115. En su opinión, ¿hay algunas comidas que no deban comer las personas que estén enfermas?

_____1 No _____2 Sí

116. ¿Cuáles son esas comidas?

_____

117. ¿Por qué no convienen?

_____

118. ¿Qué comidas les convendrían más a las señoras que estén lactando?

_____

_____

119. En su opinión, ¿hay comidas que les hagan daño a los bebés?

_____1 No _____2 Sí

120. ¿Cuáles serían esas comidas?

_____

_____

121. ¿Por qué hacen daño?

_____

_____

122. ¿A qué edad deben dejar de mamar los bebés?

_____

123. ¿A qué edad habría que darle a los niños la misma comida que la de sus padres?

_____

124. De estas diversas clases de comida, ¿cuál es la que prefiere en cada par? ¿Prefiere las comidas hechas con:

___maíz o con ___trigo?

___sorgo o con ___maíz?

___arroz o con ___frijoles?

___trigo o con ___sorgo?

___frijoles o con ___trigo?

___maíz o con ___frijoles?

___sorgo o con ___arroz?

___arroz o con ___maíz?

___frijoles o con ___sorgo?

___trigo o con ___arroz ?

(AGRADEZCALE AL ENTREVISTADO POR SU COLABORACION. CONVERSE CON EL SOBRE LA POSIBILIDAD DE HACER NUEVAS VISITAS SI FUERA NECESARIO.)

SEGUNDA PARTE. ACTIVIDADES FEMENINAS

(ESTA PARTE DEBE SER RESPONDIDA POR LA ESPOSA DEL JEFE DE FAMILIA O POR LA JEFE DE FAMILIA.)

A. Datos sociales y familiares:

125. ¿Cuál es su estado civil?

_____1 Soltera

_____2 Viuda

_____3 Separada o divorciada

_____4 Otro

_____5 Casada

_____6 Unión libre

126. Sexo de la persona entrevistada:

_____1 Masculino _____2 Femenino

127. ¿Cuál es su edad?

_____

128. ¿Cuál es la edad de su esposo?

_____

129. ¿Cuál es el nombre de su esposo?

_____

130. ¿Es Ud. la jefe de familia?

_____1 Sí _____2 No

131. ¿Cuál es su parentezco con el jefe de familia?

132. ¿Cuántas personas viven en su casa? (INCLUYASE A LOS HIJOS, LOS NIETOS, LOS PADRES, Y TODAS LAS OTRAS PERSONAS.)

_____

133. ¿Cuántos de sus hijos viven actualmente en su casa con Ud.?

_____

134. ¿Cuántos de sus hijos no viven actualmente con Ud.?

_____

135. ¿Es decir, entonces, que Ud. tiene un total de _____hijos vivos?

136.. ¿Ha tenido otros hijos que hayan fallecido?

_____1 No _____2 Sí

↓

¿Cuántos han fallecido?

_____

↓

¿A qué edades fallecieron?

_____

_____

_____

_____

137. ¿Ha tenido alguna pérdida durante sus embarazos?

_____1 No _____2 Sí

↓

¿Cuántas?

_____

"ME PODRIA,AHORA, CONTAR ALGO ACERCA DE SUS HIJOS, DE LOS QUE VIVEN EN EL PUEBLO Y DE LOS QUE ESTAN VIVIENDO FUERA DE EL." (PASESE AL CUADRO DE LA PAGINA SIGUIENTE, A LA PREGUNTA NUMERO 138.)

	Nombre	Edad	Sexo	Estado civil					¿Viven en su casa?		Ocupación	Número de hijos del hijo(a)	¿Viven con Ud?		Comentarios
				S	C	D	V	Otro	Sí	No			Sí	No	
1.															
2.															
3.															
4.															
5.															
6.															
7.															
8.															
9.															
10.															
11.															
12.															
13.															
14.															
15.															

(CONTINUESE LA LISTA EN OTRA PAGINA SI FUERA NECESARIO.)

139. (ENUMERESE A LAS OTRAS PERSONAS QUE VIVAN EN LA CASA-HABITACION, INCLUYA A LOS NIETOS, QUE QUIZAS HAYAN SIDO YA SEÑALADOS EN LA PAGINA ANTERIOR.)

Nombre	Edad	Sexo	Estado civil					Ocupación	Parentezco con el (la) jefe de familia	Comentarios
			S	C	D	V	Otro			
1.										
2.										
3.										
4.										
5.										
6.										

(CONTINUESE LA LISTA SI FUERA NECESARIO.)

B. Datos ocupacionales femeninos.

"QUISIERA SABER CUALES SON ALGUNAS DE LAS ACTIVIDADES A LAS QUE SE DEDICAN LAS MUJERES DE LA FAMILIA."

140. ¿Qué trabajo le ocupa a Ud. la mayoría de su tiempo?
(INCLUYASE TAMBIEN LA CRIANZA DE ANIMALES, LA COCINA, EL TRABAJAR EN EL CAMPO, EL TRAER AGUA O VENDER COMIDA, ETC.)

141. ¿Cuánto tiempo le toma cada semana hacer este trabajo?
(PARA PODER HACER ESTE CALCULO, POSIBLEMENTE TENGA QUE PREGUNTARSELE AL ENTREVISTADO(A) A QUE HORA COMIENZA Y A QUE HORA TERMINA CIERTAS TAREAS CADA DIA, DETERMINANDOSE LA HORA SEGUN LA SALIDA DEL SOL, ETC.)

_____horas

142. ¿De las cosas que tiene que hacer, cuál otra le toma la mayor parte de su tiempo?

143. ¿Cuánto tiempo le dedica cada semana a este trabajo?

_____horas

144. ¿Ayuda Ud. en el campo?

_____1 No

_____2 Sí

¿Qué tareas hace Ud.?

_____

_____

_____

(SIGASE LA LISTA, SI FUERA NECESARIO.)

145. ¿Es Ud. la que cría los animales de la familia? (SI SE CONSIDERA ESTA UNA RESPONSABILIDAD FEMENINA.)

_____1 No _____2 Sí

(SI ES SI, ANOTE LA CLASE DE ANIMAL, LA CANTIDAD, Y LOS PROPOSITOS POR LOS CUALES SE CRIAN EN EL CUADRO QUE SIGUE.)

146.

Clase de animal	Cantidad	Indique cuántos son para: Carne	Canjear	Vender	Productos lácteos o de granja	Tracción animal

147. ¿Quién es la persona de la familia que se interesa más en decidir los cultivos que se van a sembrar?

_____

148. ¿Siembra algo o cría algún animal para vender en el mercado?

_____1 No _____2 Sí

¿Qué es lo que vende? ¿Cada cuánto tiempo lo lleva a la venta?

_____

_____

_____

_____

_____

¿Alguien la ayuda a Ud. con esas tareas?

_____1 No _____2 Sí

¿Quién? (LA CATEGORIA: HIJA, VECINO(A), ETC.)

_____

_____

149. ¿Hace Ud. cosas (labores, artesanías, o comidas) para vender en el mercado?

_____1 No _____2 Sí

150.

¿Qué cosas son las que hace?	¿Cada cuánto tiempo se venden esas cosas en el mercado?

151. ¿Tiene Ud. algunas personas que la ayuden en hacerlas? (TRATE DE AVERIGUAR SI EXISTEN ACTIVIDADES COOPERATIVAS ENTRE LAS MUJERES.)

_____1 No _____2 Sí

¿Quiénes?

_____

_____

¿Qué hacen esas personas?

_____

_____

152. ¿A dónde queda el mercado al que Ud. va más a menudo?

_____

153. ¿Qué tan lejos está el mercado?

_____

154. ¿Cada cuánto tiempo va al mercado Ud.?

_____

155. ¿Cómo llega Ud. al mercado? (SI CAMINA O TOMA ALGUN VEHICULO.)

_____

156. ¿Qué es lo que Ud. más tiene que comprar en el mercado?

Compras	¿Qué cantidad tiene que comprar?

"AHORA ME GUSTARIA SABER EN QUE AYUDAN LOS NIÑOS DE LA FAMILIA."

157. ¿En qué ayudan más los niños?
(INCLUYASE LA COCINA, EL CARGAR AGUA, EL PASTOREO, Y LAS LABORES EN EL CAMPO.)

Labor	Sexo	Edad	¿Qué parte de la tarea es que hace?	¿La hace solo o con la ayuda de alguien?

158. ¿Les da de mamar (da pecho) a sus bebés o les da biberón?

_____1 De mamar _____2 Biberón

159. ¿A cuántos les dió de mamar?

_____

¿Por qué prefirió usar ese método?

_____

160. ¿A cuántos les dió biberón?

_____

¿Por qué prefirió usar ese método?

_____

161. ¿A quién le consulta cuando tiene cualquier problema con las siguientes cosas: (AVERIGUE LA CATEGORIA DE LA PERSONA, POR EJEMPLO, SI ES UN PARIENTE, AMIGO, VECINO(A), DOCTOR, ETC.)

La comida? _____

Las enfermedades? _____

Los asuntos familiares? _____

Los trabajos de campo? _____

Los animales? _____

De otra clase? _____

_____ _____

_____ _____

B. Actitudes hacia la comida de la jefe de familia o de la esposa del jefe de familia:

"AHORA QUISIERA HACERLE ALGUNAS PREGUNTAS SOBRE LO QUE ACOSTUMBRA COMER Y SOBRE LAS COSAS QUE PREFIERE COMER."

(REPASO DE LAS COMIDAS DE LAS ULTIMAS 24 HORAS: PIDALE AL ENTREVISTADO QUE TRATE DE RECORDAR TODO LO QUE INGERIO EL DIA ANTERIOR A LA ENTREVISTA.)

162. Día de la semana en que se hace el repaso de comida:

_____1 lunes

_____2 martes

_____3 miércoles

_____4 jueves

_____5 viernes

_____6 sábado

_____7 domingo

"ME GUSTARIA QUE ME DIJERA TODO LO QUE COMIO Y BEBIO AYER, DESDE EL MOMENTO EN QUE SE LEVANTO EN LA MAÑANA HASTA QUE SE ACOSTO EN LA NOCHE. POR FAVOR DIGAME TODO LO QUE COMIO Y BEBIO EN CASA, EN EL TRABAJO, Y CUANDO ESTABA EN CUALQUIER OTRO LUGAR FUERA DE SU CASA. INCLUYA TODAS LAS BEBIDAS, LOS REFRIGERIOS QUE TOMO Y CUALQUIER COSA QUE COMIERA POR MAS PEQUEÑA QUE FUERA. TAMBIEN QUISIERA PREGUNTARLE LOS LUGARES EN LOS QUE TOMO ESTA COMIDA. ¿COMENZAMOS?"

163. ¿A qué hora se levantó ayer?

_____

164. ¿Es la hora en que se levanta siempre?

_____1 No _____2 Sí

165. ¿A qué hora probó su primer alimento ayer en la mañana, ya sea comida o bebida? (ANOTE TAMBIEN EN EL CUADRO DE ALIMENTOS INGERIDOS QUE SIGUE.)

16 . ¿A dónde fue que probó ese alimento? (ANOTE EN EL CUADRO.)

167. ¿Me podría decir lo que fue que tomó y que cantidad hubo? (ANOTE EN EL CUADRO.)

(CONTINUE COMPLETANDO EL CUADRO, Y HAGA LAS SIGUIENTES PREGUNTAS DE CUANDO EN CUANDO:

168. ¿Qué fue lo siguiente que comió? o ¿Hubo algo más para comer o beber?)

¿Comió algo o tomó algo durante la noche?

_____1 No _____2 Sí

(ANOTE LA COMIDA Y LA CANTIDAD EN EL CUADRO.)

169. ¿Fueron los alimentos que tomó ayer diferentes de algún modo de los que toma generalmente?

_____1 No _____2 Sí

¿Por qué?

_____

¿De qué manera?

_____

CUADRO DE ALIMENTOS INGERIDOS DURANTE LAS 24 HORAS DEL DIA

Hora	Lugar donde lo comió	Comida (o bebida)	Tipo de comida y/o su preparación	Cantidad	Código para la comida	Código para la cantidad

170. ¿Comen juntos y a la vez todos los miembros de su familia? (CONSIGASE UNA EXPLICACION DE LOS HABITOS ALIMENTICIOS DE LA FAMILIA: SI LOS VARONES, LAS MUJERES Y LOS NIÑOS COMEN EN EL MISMO LUGAR Y AL MISMO TIEMPO, Y SI NO, LAS COSTUMBRES QUE PRACTICAN.)

171. ¿Quién decide lo que come la familia?

172. ¿Cuáles son las comidas que a Ud. más le gustan?

173. ¿Preparan comida especial cuando hay visitas?

_____1 No

_____2 Sí

¿Qué comidas preparan?

_____

_____

_____

174. ¿Cuando vienen visitas a comer, comen todos juntos con ellos? (DESCRIBASE LAS COSTUMBRES.)

175. En su opinión, ¿hay comidas que sean mejores para que coman los adultos?

_____1 No _____2 Sí

176. ¿Cuáles son?

_____

_____

_____

177. ¿Por qué serían las mejores?

_____

178. ¿Cuáles podrían ser las mejores comidas para que coman los bebés?

_____

_____

_____

179. ¿Por qué serían las mejores?

_____

180. ¿Tiene Ud. como darle de todas estas comidas a sus bebés?

_____1 Sí _____2 No

181. ¿Cuáles son las que no puede Ud. darles?

_____

_____

_____

182. En su opinión, ¿hay comidas que sean mejores para que coman los niños?

_____1 No _____2 Sí

183. ¿Cuáles son?

_____

_____

_____

184. ¿Por qué serían las mejores?

_____

185. ¿Tiene Ud. como darle de todas esta comidas a sus niños?

_____1 Sí _____2 No

186. ¿Cuáles no puede Ud. darles?

_____

_____

_____

187. ¿Hay comidas que sean mejores para que coma la gente anciana?

_____1 No _____2 Sí

188. ¿Cuáles serían?

_____

_____

189. ¿Por qué serían mejores?

_____

190. En su opinión, ¿cuáles serían las causas principales de las enfermedades que existan en su pueblo?

191. ¿Y las de su familia?

192. En su opinión, ¿hay algunas comidas que sean mejores para las personas enfermas?

_____1 No _____2 Sí

193. ¿Cuáles son esas comidas?

_____

_____

194. En su opinión, ¿hay algunas comidas que no deban comer las personas que estén enfermas?

_____1 No _____2 Sí

195. ¿Cuáles son esas comidas?

_____

196. ¿Por qué no convienen?

_____

197. ¿Qué comidas les convendrían más a las señoras que estén lactando?

_____

_____

198. En su opinión, ¿hay comidas que les hagan daño a los bebés?

_____1 No _____2 Sí

199. ¿Cuáles serían esas comidas?

_____

_____

200. ¿Por qué hacen daño?

_____

_____

201. ¿A qué edad deben dejar de mamar los bebés?

_____

202. ¿A qué edad habría que darle a los niños la misma comida que la de sus padres?

_____

203. De estas diversas clases de comida, ¿cuál es la que prefiere en cada par? ¿Prefiere las comidas hechas con:

___maíz o con ___trigo?

___sorgo o con ___maíz?

___arroz o con ___frijoles?

___trigo o con ___sorgo?

___frijoles o con ___trigo?

___maíz o con ___frijoles?

___sorgo o con ___arroz?

___arroz o con ___maíz?

___frijoles o con ___sorgo?

___trigo o con ___arroz ?

(AGRADEZCALE AL ENTREVISTADO POR SU COLABORACION. CONVERSE CON EL SOBRE LA POSIBILIDAD DE HACER NUEVAS VISITAS SI FUERA NECESARIO.)

204. ¿Es Ud. la que prepara la mayoría de la comida para la familia?

_____1 No

Si no es Ud.,¿quién es la persona que prepara la mayoría de la comida de la familia? (PARENTEZCO CON LA ESPOSA DEL JEFE DE FAMILIA.)

_____

"PODRIA HABLAR CON ELLA SOBRE COMO PREPARA SUS COMIDAS "

(AGRADEZCALE SU COLABORACION Y LUEGO CONVERSE CON LA PERSONA ENCARGADA DE LA COCINA. CONTINUESE CON LA PREGUNTA 205.)

_____2 Sí

(SI ES LA QUE COCINA, PASESE A LA PREGUNTA 208.)

TERCERA PARTE. LAS COMIDAS A BASE DE SORGO Y SU PREPARACION.

205. ¿Cómo se llama Ud.? (SI NO ES LA ESPOSA DEL JEFE DE FAMILIA O LA JEFE DE FAMILIA.)

_____

206. ¿Cuál es su edad?

_____

207. ¿Cuál es su parentezco con el jefe de familia?

_____

(EL CONSUMO DEL SORGO:)

208. ¿Usa el sorgo para cocinar?

_____1 No

(SI NO LO USA, CONTINUE CON LAS PREGUNTAS 209-212.)

_____2 Sí

(SI LO USA, PASESE A LA PREGUNTA 213.)

209. ¿Tendría interés en usar el sorgo para cocinar?

_____1 No

_____2 Sí

210. ¿Si no tendría, por qué no?

_____

_____

(PASESE A LA PREGUNTA 247 SI LA ENTREVISTADA NO ES LA ESPOSA DEL JEFE DE FAMILIA NI LA JEFE DE FAMILIA. SI FUERA LA ESPOSA O LA JEFE DE FAMILIA, CONCLUYA, EN ESTE LUGAR, CON LA ENTREVISTA.)

211. Si sí tiene, ¿por qué cree Ud. que tendría interés en cocinar con sorgo?

_____

_____

212. ¿Por qué es que no lo usa actualmente?

_____

_____

(PASESE A LA PREGUNTA 247 SI LA ENTREVISTADA NO ES LA ESPOSA DEL JEFE DE FAMILIA NI LA JEFE DE FAMILIA. SI FUERA LA ESPOSA O LA JEFE DE FAMILIA, CONCLUYA EN ESTE LUGAR CON LA ENTREVISTA.)

213. ¿Qué cosas son las que prepara con sorgo?

_____Tortillas

_____Pepusa

_____Sopa

_____Chicha

_____Otro (ESPECIFIQUE.)

_____

_____

214. ¿Del sorgo que usa, qué cantidad es usada para hacer cada una de estas comidas? (CALCULESE EL PORCENTAGE.)

_____Tortillas

_____Pepusa

_____Sopa

_____Chicha

_____Otra (ESPECIFIQUE)

_____

_____

215. ¿Por qué, principalmente, es que usa Ud. el sorgo para cocinar?

_____1 No hay otra alternativa

_____2 Es más barato que otras comidas

_____3 Lo prefiero a otras comidas

_____4 Se pueden mantener mejor las comidas hechas con el sorgo.

_____5 Me gusta.

_____6 Otras razones (ESPECIFIQUE:)

_____

_____

216. ¿Cada cuánto tiempo come su familia algo preparado con sorgo?

_____1 Todos los días

_____2 Cada cuántos días

_____3 Semanalmente

_____4 En ocasiones especiales

_____5 En otras ocasiones (ESPECIFIQUE)

_____

217. ¿Prepara Ud. platos en los cuáles se mezcla el sorgo con otros cereales o con frijoles?

_____1 No

_____2 Sí

¿Con qué alimentos se mezcla?

_____1 Trigo

_____2 Maíz

_____3 Frijoles

_____4 Cebada

_____5 Otro (ESPECIFIQUE)

_____

_____

(ANOTE ESTAS PROPORCIONES AL HACER LA COLECCION DE RECETAS DE COMIDAS PREPARADAS CON SORGO.)

218. ¿Cuándo lo cocina Ud., mezcla el sorgo con otros tipos de comidas?

_____1 No

_____2 Sí

¿Con cuáles de estos alimentos lo mezcla?

_____1 Carne

_____2 Pescado

_____3 Huevos

_____4 Leche

_____5 Vegetales

_____6 Otras comidas (ESPECIFIQUE)

_____

_____

(ANOTE ESTAS PROPORCIONES AL HACER LA COLECCION DE RECETAS DE COMIDAS PREPARADAS CON SORGO.)

219. ¿En qué usa Ud. cada una de estas diversas clases de sorgo? (ENSEÑELE AL ENTREVISTADO(A) MUESTRAS DEL SORGO DE LA REGION Y HAGA UNA LISTA DE SUS USOS.)

Variedad (USESE EL NOMBRE LOCAL)	Color	Textura	Viso o Brillo	Otro	En qué se usa
1.					
2.					
3.					
4.					
5.					

220. ¿Cuál variedad de sorgo prefiere?

_____

221. ¿Por qué prefiere esta variedad, por su

_____1 color?

_____2 blandura?

_____3 brillo?

_____4 dureza?

_____5 sabor?

_____6 por otra razón? (ESPECIFIQUE)

_____

_____

222. ¿Compra el sorgo sin cocinar, las tortillas ya preparadas, y la masa también?

_____1 No

_____2 Sí

¿Cuáles compra?

_____sorgo

_____tortillas

_____masa

223. ¿De dónde consigue el agua que usan para cocinar?

_____

Si ésta no llega a la casa por la cañería, ¿a qué distancia está el lugar de donde saca el agua?

_____

¿Cómo lleva el agua a la casa?

_____

¿Cómo guarda el agua en la casa?

_____

(PREPARACION DE LAS TORTILLAS DE SORGO:)

224. ¿Prepara Ud. tortillas de sorgo?

_____1 No

(SI ES NO, PASESE A LA PREGUNTA 246. PIDALE A LA ENTREVISTADA SI ELLA PODRIA DAR OTRAS RECETAS HECHAS CON SORGO.)

_____2 Sí

"QUISIERA APRENDER COMO HACE SUS TORTILLAS DE SORGO. ¿ME PODRIA DEJAR MIRARLA MIENTRAS LAS HACE?" (OBSERVE, DESCRIBA, Y TOME FOTOGRAFIAS DE LA COCINA, DE LOS IMPLEMENTOS, Y DE LOS METODOS DE COCINAR. CONTINUESE CON LA PREGUNTA 225.)

225. ¿De dónde consigue el álcali?

226. ¿Cuánto álcali usa Ud.? (HAGASE UN ESTIMADO DE LAS PROPORCIONES.)

227. ¿Remoja Ud. el sorgo en el álcali y agua?

_____1 No _____2 Sí

228. ¿Cuánto tiempo se tiene que cocinar la mezcla de álcali con sorgo?

229. ¿En que clase de vasija o recipiente lo cocina Ud.?
(ANOTE SOBRETODO SI UTILIZA ALGUNA VASIJA DE HIERRO.)

230. ¿Lava Ud. el sorgo que ya ha sido cocido?

_____1 No _____2 Sí

(SORGO MOLIDO: OBSERVE EL SISTEMA USADO PARA MOLER DETALLADAMENTE Y TOME LAS DEBIDAS FOTOGRAFIAS.)

231. ¿Muele el sorgo en su casa o lo lleva(al molino)para que se lo muelan?

_____1 En casa

_____2 Lo lleva a moler (incluyéndose también pequeños molinos eléctricos o a gasolina que pudiera haber en alguna tienda de la localidad.)

_____3 Otro (ESPECIFIQUE)

_____

_____

232. Si lo muele en casa, ¿cómo lo muele?

_____1 Con moledora a mano

_____2 Con piedra

_____3 De otra forma (DESCRIBA)

_____

_____

233. (ENTREVISTADOR: AVERIGUE CON CERTEZA SI EL SORGO NO ENTRA EN CONTACTO CON ALGUN IMPLEMENTO DE HIERRO O CON PARTES DE HIERRO DURANTE EL PROCESO DE MOLERLO.)

234. En su opinión, ¿cuál es el mejor método para moler el sorgo?

235. ¿Por qué cree que sea el mejor método?

236. (OBSEVESE LA FINURA DEL NIXTAMAL DE SORGO MOLIDO Y DESCRIBALO.)

(CARACTERISTICAS DE LAS TORTILLAS.)

237. (MIDASE EL GROSOR Y EL DIAMETRO.)

Grosor:_____cm.

Diámetro:_____cm.

238. ¿Se hinchan (crecen) las tortillas?

_____1 No _____2 Sí

(DESCRIBASE:)

_____

_____

239. (PREGUNTELE AL ENTREVISTADO SOBRE LAS CARACTERISTICAS FISICAS DE LAS TORTILLAS.)

Color:

Exterior_____

Interior_____

Textura:_____

Forma:_____

Flexibilidad:_____

240. (PREGUNTELE AL ENTREVISTADO SOBRE LAS CARACTERISTICAS SENSORIALES DE LAS TORTILLAS.)

Aroma:_____

Sabor:_____

Sensación después de tragarlas (Si se sienten pesadas debido al sorgo.):_____

_____

Otra (comentarios):_____

_____

241. ¿Qué tan a menudo hace Ud. tortillas?

242. ¿Cómo guarda las tortillas Ud.?

243. ¿Cuánto tiempo las guarda?

244. ¿Hay problemas con las tortillas que se guardan?

_____1 No _____2 Sí

¿Qué problemas hay ?

_____

_____

245. ¿Cuáles se pueden guardar mejor, las tortillas de sorgo o las de maíz?

_____1 Sorgo

_____2 Maíz

_____3 No hay diferencia

246. (RECETAS: JUNTE LA MAYOR CANTIDAD POSIBLE DE RECETAS HECHAS CON SORGO. UTILICE LAS HOJAS PARA DATOS SUPLEMENTARIOS ADJUNTAS.)

(SI LA PERSONA QUE COCINA LA MAYOR PARTE DE LA COMIDA NO FUERA LA ESPOSA DEL JEFE DE FAMILIA NI LA JEFE DE FAMILIA, CONTINUE CON LA SECCION DE ACTITUDES HACIA LA COMIDA. SI LA PERSONA YA HUBIESE RESPONDIDO A ESAS PREGUNTAS, AGRADEZCALE SU COLABORACION Y CONVERSELE DE LA POSIBILIDAD DE HACER NUEVAS VISITAS PARA VER COMO COCINA, PARA CONSEGUIR RECETAS, ETC.)

B. Actitudes hacia las comidas:

(PARA SER RESPONDIDO POR LA PERSONA QUE HACE LA COCINA SI NO FUERA ESTA LA ESPOSA DEL JEFE DE FAMILIA O LA JEFE DE FAMILIA.)

"AHORA QUISIERA HACERLE ALGUNAS PREGUNTAS SOBRE LO QUE ACOSTUMBRA COMER Y SOBRE LAS COSAS QUE PREFIERE COMER."

(REPASO DE LAS COMIDAS DE LAS ULTIMAS 24 HORAS: PIDALE AL ENTREVISTADO QUE TRATE DE RECORDAR TODO LO QUE INGERIO EL DIA ANTERIOR A LA ENTREVISTA.)

247. Día de la semana en que se hace el repaso de comida:

_____1 lunes

_____2 martes

_____3 miércoles

_____4 jueves

_____5 viernes

_____6 sábado

_____7 domingo

"ME GUSTARIA QUE ME DIJERA TODO LO QUE COMIO Y BEBIO AYER, DESDE EL MOMENTO EN QUE SE LEVANTO EN LA MAÑANA HASTA QUE SE ACOSTO EN LA NOCHE. POR FAVOR DIGAME TODO LO QUE COMIO Y BEBIO EN CASA, EN EL TRABAJO, Y CUANDO ESTABA EN CUALQUIER OTRO LUGAR FUERA DE SU CASA. INCLUYA TODAS LAS BEBIDAS, LOS REFRIGERIOS QUE TOMO Y CUALQUIER COSA QUE COMIERA POR MAS PEQUEÑA QUE FUERA. TAMBIEN QUISIERA PREGUNTARLE LOS LUGARES EN LOS QUE TOMO ESTA COMIDA. ¿COMENZAMOS?"

248. ¿A qué hora se levantó ayer?

_____

249. ¿Es la hora en que se levanta siempre?

_____1 No _____2 Sí

250. ¿A qué hora probó su primer alimento ayer en la mañana, ya sea comida o bebida? (ANOTE TAMBIEN EN EL CUADRO DE ALIMENTOS INGERIDOS QUE SIGUE.)

251. ¿A dónde fue que probó ese alimento? (ANOTE EN EL CUADRO.)

252. ¿Me podría decir lo que fue que tomó y que cantidad hubo? (ANOTE EN EL CUADRO.)

(CONTINUE COMPLETANDO EL CUADRO, Y HAGA LAS SIGUIENTES PREGUNTAS DE CUANDO EN CUANDO:
¿Qué fue lo siguiente que comió? o ¿Hubo algo más para comer o beber?)

253. ¿Comió algo o tomó algo durante la noche?

_____1 No _____2 Sí

(ANOTE LA COMIDA Y LA CANTIDAD EN EL CUADRO.)

254. ¿Fueron los alimentos que tomó ayer diferentes de algún modo de los que toma generalmente?

_____1 No _____2 Sí

¿Por qué?

_____

¿De qué manera?

_____

CUADRO DE ALIMENTOS INGERIDOS DURANTE LAS 24 HORAS DEL DIA

Hora	Lugar donde lo comió	Comida (o bebida)	Tipo de comida y/o su preparación	Cantidad	Código para la comida	Código para la cantidad

255. ¿Comen juntos y a la vez todos los miembros de su familia? (CONSIGASE UNA EXPLICACION DE LOS HABITOS ALIMENTICIOS DE LA FAMILIA: SI LOS VARONES, LAS MUJERES Y LOS NIÑOS COMEN EN EL MISMO LUGAR Y AL MISMO TIEMPO, Y SI NO, LAS COSTUMBRES QUE PRACTICAN.)

256. ¿Quién decide lo que come la familia?

257. ¿Cuáles son las comidas que a Ud. más le gustan?

258. ¿Preparan comida especial cuando hay visitas?

1 No _____ 2 Sí

¿Qué comidas preparan?

_____

_____

_____

259. ¿Cuando vienen visitas a comer, comen todos juntos con ellos? (DESCRIBASE LAS COSTUMBRES.)

260. En su opinión, ¿hay comidas que sean mejores para que coman los adultos?

_____1 No _____2 Sí

261. ¿Cuáles son?

_____

_____

_____

262. ¿Por qué serían las mejores?

_____

263. ¿Cuáles podrían ser las mejores comidas para que coman los bebés?

_____

_____

_____

264. ¿Por qué serían las mejores?

_____

265. ¿Tiene Ud. como darle de todas estas comidas a sus bebés?

_____1 Sí _____2 No

266. ¿Cuáles son las que no puede Ud. darles?

_____

_____

_____

267. En su opinión, ¿hay comidas que sean mejores para que coman los niños?

_____1 No _____2 Sí

268. ¿Cuáles son?

_____

_____

_____

269. ¿Por qué serían las mejores?

_____

270. ¿Tiene Ud. como darle de todas esta comidas a sus niños?

_____1 Sí _____2 No

271. ¿Cuáles no puede Ud. darles?

_____

_____

_____

272. ¿Hay comidas que sean mejores para que coma la gente anciana?

_____1 No _____2 Sí

273. ¿Cuáles serían?

_____

_____

274. ¿Por qué serían mejores?

_____

275. En su opinión, ¿cuáles serían las causas principales de las enfermedades que existan en su pueblo?

276. ¿Y las de su familia?

277. En su opinión, ¿hay algunas comidas que sean mejores para las personas enfermas?

_____1 No _____2 Sí

278. ¿Cuáles son esas comidas?

_____

_____

279. En su opinión, ¿hay algunas comidas que no deban comer las personas que estén enfermas?

_____1 No _____2 Sí

280. ¿Cuáles son esas comidas?

_____

281. ¿Por qué no convienen?

_____

282. ¿Qué comidas les convendrían más a las señoras que estén lactando?

_____

_____

283. En su opinión, ¿hay comidas que les hagan daño a los bebés?

_____1 No _____2 Sí

284. ¿Cuáles serían esas comidas?

_____

_____

285. ¿Por qué hacen daño?

_____

_____

286. ¿A qué edad deben dejar de mamar los bebés?

_____

287. ¿A qué edad habría que darle a los niños la misma comida que la de sus padres?

_____

288. De estas diversas clases de comida, ¿cuál es la que prefiere en cada par? ¿Prefiere las comidas hechas con:

___maíz o con ___trigo?

___sorgo o con ___maíz?

___arroz o con ___frijoles?

___trigo o con ___sorgo?

___frijoles o con ___trigo?

___maíz o con ___frijoles?

___sorgo o con ___arroz?

___arroz o con ___maíz?

___frijoles o con ___sorgo?

___trigo o con ___arroz ?

(AGRADEZCALE AL ENTREVISTADO POR SU COLABORACION. CONVERSE CON EL SOBRE LA POSIBILIDAD DE HACER NUEVAS VISITAS SI FUERA NECESARIO.)

PRINCIPALES TIPOS DE PANOJA DE SORGO

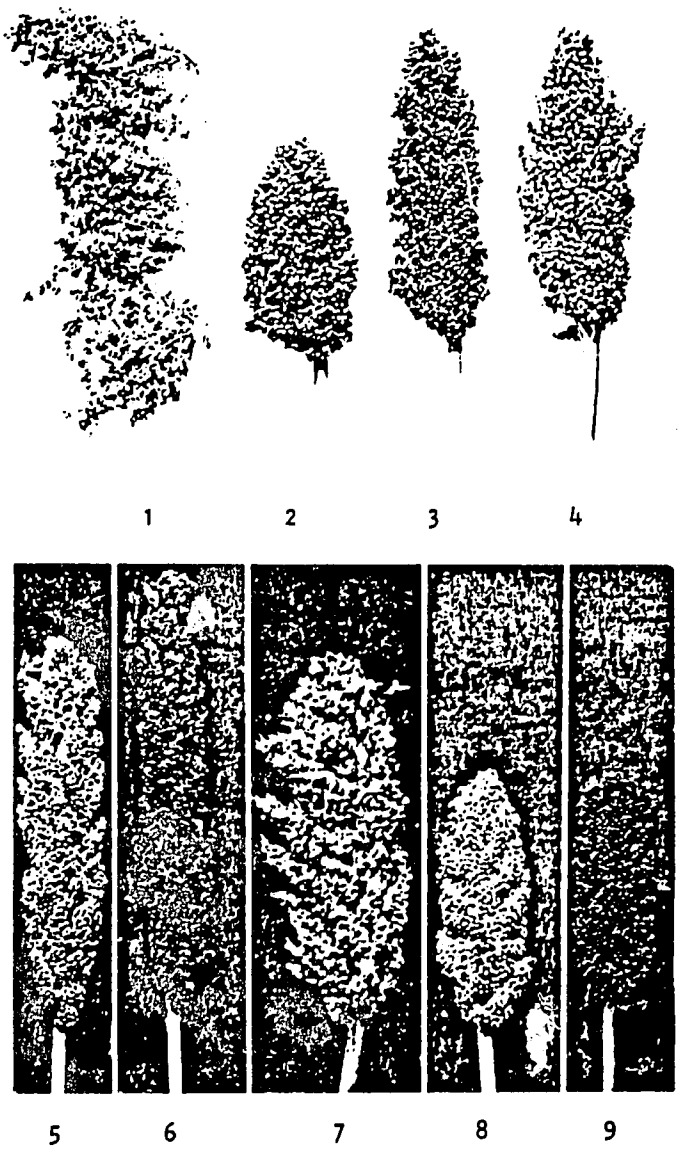

(ELIJA EL TIPO DE PANOJA MAS PARECIDO.)

IDENTIFICACION EN EL CAMPO DE LOS TIPOS DE SUELO

Tomado de una publicación de la Administración de Vías Públicas de los Estados Unidos (1943).

Prueba en el campo 1/	Franco arenoso	Franco limoso	Franco	Franco arcilloso	Arcilla
Prueba de molde o terrón. (Cast) 2/	El molde necesita ser manejado con cuidado para que no se rompa	Debe ser manejado cuidadosamente si es del tipo no-cohesivo. Se podrá manejar libremente si es franco limoso de mejor calidad	Se puede manejar libremente en molde.	El terrón no se rompe aunque se maneje bastante	Se pueden hacer moldes de diversas formas con el terrón.
Prueba de frotamiento entre las manos. (Thread) 3/	Grueso, desmoronadizo, que se rompe facilmente	Grueso, suave, que se rompe facilmente	Puede frotarse hasta formar una punta tan fina como la de un lapiz que se rompe facilmente	Se puede enrollar a un mínimo tamaño para formar una punta firme y fina	Se puede enrollar a una punta fina que además es plástica
Prueba de frotamiento entre el dedo pulgar y los otros dedos. (Ribbon) 4/	No toma forma consistente	No toma forma consistente	Toma la forma de una cinta corta y gruesa que se rompe bajo su propio peso	Toma la forma de una cinta delgada que se rompe bajo su propio peso	Toma la forma de una delgada y flexible cinta que no se rompe bajo su propio peso

1/ Suelo mojado para dar consistencia plastica.

2/ Se escurre toda la humedad de la muestra para formar un terrón. Prueba su fortaleza y resistencia a romperse o desmoronarse.

3/ Se logra al frotar un muestra humeda entre las palmas de las manos.

4/ Se logra al frotar el dedo índice contra el pulgar tratando de darle una forma consistente, como la de un pedazo de cinta, al pellizcar la muestra.

APPENDIX B

APPENDIX B

Inventory of Most Commonly Used Food Items and Their Prices*

Food	Cost/Unit $ U.S.	Cost/Pound $ U.S.
Cereals:		
Maize		.12
Rice		.39
Sorghum		.08
Legumes:		
Red beans		.50
Starchy Roots:		
Potatoes		.25
Yucca		.20
Vegetables:		
Beans, green		.20
Cabbage		.20
Carrots		.30
Chillies, dry	.05 for 10	
Cucumbers		.23
Field peas, fresh		.20
Onions, mature		.20
Pepper, sweet green		.15
Squash		.40
Tomatoes		.27
Fruit:		
Avocado		.25
Banana		.07
Cantaloupe		.25
Cashew fruit		.15
Coconut		.20
Mango		.15
Orange		.20

*Prices are those at the Choluteca market, the nearest large market where all items can be purchased.

Food	Cost/Unit $ U.S.	Cost/Pound $ U.S.
Fruit, continued:		
Pineapple		.30
Plantain		.15
Watermelon		.05
Dairy:		
Butter		2.00
Cheese, white		1.50
Eggs, hen	1.00/doz.	.83
Milk, fresh	.85/qt.	.37
Milk, canned		1.45
Milk, powdered whole		2.15
Poultry and Fish:		
Chicken		.73
Fish		1.00
Dried fish		(not determined)
Dried shrimp		1.50
Sardines, in can	.65 (3 3/4 oz. can)	
Meat:		
Beef, ground		1.25
Beef, liver		.75
Pork		1.35
Sausages		1.50
Other food items:		
Bread		.90
Bread, sweet rolls	.50/doz.	
Cocoa		.25
Carbonated cola-type drinks	.07 each	
Coffee		1.20
Corn flakes	1.00/8 oz.	
Macaroni		.44
Maggi soup (bouillon cubes)	4.00/doz. pkg.	
Orange juice	.90/qt.	.41
Palm oil, hydrogenated		.63
Rosquitoes	.05 for 2	
Salt		.15
Spaghetti		.44
Sugar, refined		.43
Sugar, unrefined (panela)		.19
Wheat flour		(not determined)

APPENDIX C

Appendix C-1

Format for Nutrition Efficiency of Various Cropping Activities Matrix

Nutrient	Yearly Requirement for Average Household of 7 Persons	Relationship	Cropping Activity*							
			3-Crop Sorghum	3-Crop Maize	3-Crop Beans	2-Crop Maize	2-Crop Sorghum	1-Crop Sorghum	1-Crop Maize	1-Crop Beans
Calories	5,077,515 (Kiloc.)	≤	1557	1616	1548	1616	1557	1557	1616	1548
Protein	70,774 g.	≤	45.9	43.1	100.3	43.1	45.9	45.9	43.1	100.3
Vitamin A	1,447,225 µg.	≤	272.4	0**	40.9	0**	272.4	272.4	0**	40.9
Thiamin	2,274 mg.	≤	1.86	2.04	2.45	2.04	1.86	1.86	2.04	2.45
Riboflavin	3,420 mg.	≤	.68	.49	.82	.49	.68	.68	.49	.82
Niacin	37,843 mg.	≤	18.16	9.08	9.53	9.08	18.16	18.16	9.08	9.53
Ascorbic Acid	64,970 mg.	≤	0	0	13.62	0	0	0	0	13.62
Calcium	1,132,000 mg.	≤	117.1	31.8	622.0	31.8	117.1	117.1	31.8	622.0
Iron	37,340 mg.	≤	19.07	10.44	30.42	10.44	19.07	19.07	10.44	30.42
Objective: Minimize total land use			.00055	.00076	.00417	.00089	.00044	.00054	.00075	.000310

*Unit of crop = 1 pound
**White varieties of maize which contain negligible amounts of Vitamin A were being used.

Appendix C-2

Solution to Appendix C-1 Matrix

SECTION 1 - ROWS PRIMAL-DUAL OUTPUT

NUMBER	..NAME..	AT	..ACTIVITY..	SLACK ACTIVITY	.LOWER LIMIT	.UPPER LIMIT	DUAL ACTIVITY	.INPUT COST.	REDUCED COST
1	OBJ	FR	16.810112	-16.810112	NONE	NONE	1.000000	.	1.000000
2	CALORIES	BS	.1454122+08	.9463706+07	.5077515+07	NONE	.	.	.
3	PROTEIN	BS	.6894358+06	.6186618+06	70774.000000	NONE	.	.	.
4	VITAMINA	LL	.1447225+07	.	.1447225+07	NONE	-.000002	.	.000002
5	THIAMIN	BS	20236.714355	17962.714355	2274.000000	NONE	.	.	.
6	RIBOFLAV	BS	7037.270325	3617.270355	3420.000000	NONE	.	.	.
7	NIACIN	BS	.1289349+06	91091.865234	37843.000000	NONE	.	.	.
8	ASCORBIC	LL	64970.000000	.	64970.000000	NONE	-.000223	.	.000223
9	CALCIUM	BS	.3505325+07	.2373825+07	.1131500+07	NONE	.	.	.
10	IRON	BS	.2327671+06	.1954271+06	37340.000000	NONE	.	.	.

SECTION 2 - COLUMNS PRIMAL-DUAL OUTPUT

NUMBER	..NAME..	AT	..ACTIVITY..	.INPUT COST.	.LOWER LIMIT	.UPPER LIMIT	REDUCED COST
11	3CROP S	LL	.	.000550	.	NONE	.000110
12	3CROP M	LL	.	.000760	.	NONE	.000694
13	3CROP B	LL	.	.004170	.	NONE	.001070
14	2CROP M	LL	.	.000890	.	NONE	.000824
15	2CROP S	BS	4596.638000	.000440	.	NONE	.
16	1CROP S	LL	.	.000540	.	NONE	.000100
17	1CROP M	LL	.	.000750	.	NONE	.000684
18	1CROP B	BS	4770.190857	.003100	.	NONE	.

Appendix C-3

Cropping Activities with Vitamin A and Ascorbic Acid Nonrestrictive

SECTION 1 - ROWS PRIMAL-DUAL OUTPUT

NUMBER	..NAME..	AT	..ACTIVITY..	SLACK ACTIVITY	.LOWER LIMIT	.UPPER LIMIT	DUAL ACTIVITY	.INPUT COST.	REDUCED COST
1	OBJ	FR	4.251580	-4.251580	NONE	NONE	1.000000	.	1.000000
2	CALORIES	BS	.1504479+08	.9967280+07	.5077515+07	NONE	.	.	.
3	PROTEIN	BS	.4435171+06	.3727431+06	70774.000000	NONE	.	.	.
4	VITAMINA	FR	.2632114+07	-.1184889+07	NONE	NONE	.	.	.
5	THIAMIN	BS	17972.587402	15698.587524	2274.000000	NONE	.	.	.
6	RIBOFLAV	BS	6570.623352	3150.623383	3420.000000	NONE	.	.	.
7	NIACIN	BS	.1754743+06	.1376313+06	37843.000000	NONE	.	.	.
8	ASCORBIC	FR	.	64970.000000	NONE	NONE	.	.	.
9	CALCIUM	LL	.1131500+07	.	.1131500+07	NONE	-.000004	.	.000004
10	IRON	BS	.1842673+06	.1469273+06	37340.000000	NONE	.	.	.

SECTION 2 - COLUMNS PRIMAL-DUAL OUTPUT

NUMBER	..NAME..	AT	..ACTIVITY..	.INPUT COST.	.LOWER LIMIT	.UPPER LIMIT	REDUCED COST
11	3CROP S	LL	.	.000550	.	NONE	.000110
12	3CROP M	LL	.	.000760	.	NONE	.000641
13	3CROP B	LL	.	.004170	.	NONE	.001833
14	2CROP M	LL	.	.000890	.	NONE	.000771
15	2CROP S	BS	9662.681396	.000440	.	NONE	.
16	1CROP S	LL	.	.000540	.	NONE	.000100
17	1CROP M	LL	.	.000750	.	NONE	.000631
18	1CROP B	LL	.	.003100	.	NONE	.000763

Appendix C-4

Format for Amino Acid Matrix

Protein	Yearly Requirement for Average Household of 7 Persons (grams)	Relationship	Cropping Activity		
			3-Crop Sorghum* (1 lb.)	3-Crop Maize* (1 lb.)	3-Crop Beans* (1 lb.)
Total Protein	70,774	≤	45.90	43.10	100.30
Histidine	93.4	≤	.98	1.16	2.82
Isoleucine	1843.3	≤	1.79	1.58	4.17
Leucine	2881.3	≤	6.07	5.36	7.58
Lycine	3028.0	≤	.92	1.14	7.17
Methionine + Cystine	1971.4	≤	1.32	1.48	1.90
Phenylalanine + Tyrosine	2130.5	≤	3.45	3.72	7.65
Threonine	1869.9	≤	1.38	1.54	3.95
Tryptophan	429.6	≤	.55	3.02	0
Valine	2019.6	≤	2.28	2.07	4.57
Objective: Minimize land use.			.00055	.00076	.00417

*Amino acid content of foods calculated from: FAO, Amino-acid Content of Foods and Biological Data on Proteins. 1970. Rome: FAO.

Appendix C-5

Solution to Amino Acid Matrix

SECTION 1 - ROWS PRIMAL-DUAL OUTPUT

NUMBER	..NAME..	AT	..ACTIVITY..	SLACK ACTIVITY	.LOWER LIMIT	.UPPER LIMIT	DUAL ACTIVITY	.INPUT COST.	REDUCED COST
1	OBJ	FR	1.777280	-1.777280	NONE	NONE	1.000000	.	1.000000
2	PROTEIN	BS	78236.477539	7462.477600	70774.000000	NONE	.	.	.
3	HISTIDIN	BS	1862.387924	1768.987930	93.400000	NONE	.	.	.
4	ISOLEUCI	BS	3124.197174	1280.897186	1843.299988	NONE	.	.	.
5	LEUCINE	BS	8738.057983	5856.758057	2881.299988	NONE	.	.	.
6	LYCINE	LL	3028.000000	.	3028.000000	NONE	-.000578	.	.000578
7	METH CYS	LL	1971.399994	.	1971.399994	NONE	-.000014	.	.000014
8	PHEN TYR	BS	5911.957214	3781.457245	2130.500000	NONE	.	.	.
9	THREONIN	BS	2616.598755	746.698776	1869.899994	NONE	.	.	.
10	TRYPTOPH	BS	597.423134	167.823137	429.599998	NONE	.	.	.
11	VALINE	BS	3769.622559	1750.022568	2019.599991	NONE	.	.	.

SECTION 2 - COLUMNS PRIMAL-DUAL OUTPUT

NUMBER	..NAME..	AT	..ACTIVITY..	.INPUT COST.	.LOWER LIMIT	.UPPER LIMIT	REDUCED COST
12	3CROP S	BS	1086.223877	.000550	.	NONE	.
13	3CROP M	LL	.	.000760	.	NONE	.000081
14	3CROP B	BS	282.939194	.004170	.	NONE	.

Appendix C-6

Solution for 3-Crop Model with Vitamin A, Riboflavin, Ascorbic Acid and Calcium Nonrestrictive

SECTION 1 - ROWS PRIMAL-DUAL OUTPUT

NUMBER	..NAME..	AT	..ACTIVITY..	SLACK ACTIVITY	.LOWER LIMIT	.UPPER LIMIT	DUAL ACTIVITY	.INPUT COST.	REDUCED COST
1	OBJ	FR	262.755611	-272.755611	NONE	NONE	1.000000	.	1.000000
2	CALORIES	LL	.5077515+07	.	.5077515+07	NONE	-.000012	.	.000012
3	PROTEIN	BS	.1499269+06	79152.898437	70774.000000	NONE	.	.	.
4	VITAMINA	FR	.8872988+06	.5599262+06	NONE	NONE	.	.	.
5	THIAMIN	BS	6068.294556	3794.294556	2274.000000	NONE	.	.	.
6	RIBOFLAV	FR	2218.179871	1201.820099	NONE	NONE	.	.	.
7	NIACIN	BS	59183.484375	21340.484375	37843.000000	NONE	.	.	.
8	ASCORBIC	FR	60.526900	64909.472656	NONE	NONE	.	.	.
9	CALCIUM	FR	.3841202+06	.7473797+06	NONE	NONE	.	.	.
10	IRON	BS	62239.889160	24899.889160	37340.000000	NONE	.	.	.
11	LAND	FR	1.809700	3.190300	NONE	NONE	.	.	.
12	HISTIDIN	BS	3204.068939	3110.668915	93.400000	NONE	.	.	.
13	ISOLEUCI	BS	5847.971252	4004.671265	1843.299988	NONE	.	.	.
14	LEUCINE	BS	19801.674316	16920.374268	2881.299988	NONE	.	.	.
15	LYCINE	LL	3028.000000	.	3028.000000	NONE	-.067217	.	.067217
16	METH CYS	BS	4307.248352	2335.848389	1971.399994	NONE	.	.	.
17	PHEN TYR	BS	11269.509033	9139.009033	2130.500000	NONE	.	.	.
18	THREONIN	BS	4511.758728	2641.858765	1869.899994	NONE	.	.	.
19	TRYPTOPH	BS	1791.168686	1361.568680	429.599998	NONE	.	.	.
20	VALINE	BS	7445.517334	5425.917297	2019.599991	NONE	.	.	.

SECTION 2 - COLUMNS PRIMAL-DUAL OUTPUT

NUMBER	..NAME..	AT	..ACTIVITY..	.INPUT COST.	.LOWER LIMIT	.UPPER LIMIT	REDUCED COST
21	3CROP S	BS	3256.670319	.080000	.	NONE	.
22	3CROP M	LL	.	.120000	.	NONE	.024524
23	3CROP B	BS	4.443972	.500000	.	NONE	.
24	OILP	LL	.	.630000	.	NONE	.583193

Appendix C-7

Format for Subsistence Model Matrix

Restraint	Yearly Requirement Ave. Household	Relationship	3-Crop Sorghum (1 lb.)	3-Crop Maize (1 lb.)	3-Crop Beans (1 lb.)	Oil (1 lb.)
Calories	5,077,515 C.	≤	1557	1616	1548	4013
Protein	70,774 g.	≤	45.9	43.1	100.3	0
Vitamin A	1,447,225 μg.	≤	272.4	0	40.9	0
Thiamin	2,274 mg.	≤	1.86	2.04	2.45	0
Riboflavin	3,420 mg.	≤	.68	.49	.82	0
Niacin	37,843 mg.	≤	18.16	9.08	9.53	0
Ascorbic Acid	64,970 mg.	≤	0	0	13.62	0
Calcium	1,132,000 mg.	≤	117.1	31.8	622.0	0
Iron	37,340 mg.	≤	19.1	10.4	30.4	0
Land	5 mz.	N	.00055	.00076	.00417	0
Histidine	93.4 g.	≤	.98	1.16	2.82	0
Isoleucine	1,834.3 g.	≤	1.79	1.58	4.17	0
Leucine	2,881.3 g.	≤	6.07	5.36	7.58	0
Lycine	3,028.0 g.	≤	.92	1.14	7.17	0
Meth. + Cys.	1,971.4 g.	≤	1.32	1.48	1.90	0
Phen. + Tyr.	2,130.5 g.	≤	3.45	3.72	7.65	0
Threonine	1,869.9 g.	≤	1.38	1.54	3.95	0
Tryptophan	429.6 g.	≤	.55	3.02	0	0
Valine	2,019.6 g.	≤	2.28	2.07	4.57	0
Oil	50 lbs.	≤	0	0	0	1
Maize	1,430 lbs.	≤	0	1	0	0
Beans	264 lbs.	≤	0	0	1	0
Objective: Minimize Cost of Diet:			.08	.12	.50	.63

Appendix C-8

Solution to Subsistence Model

SECTION 1 - ROWS

PRIMAL-DUAL OUTPUT

NUMBER	..NAME..	AT	..ACTIVITY..	SLACK ACTIVITY	.LOWER LIMIT	.UPPER LIMIT	DUAL ACTIVITY	.INPUT COST.	REDUCED COST
1	OBJ	FR	445.944595	-445.944595	NONE	NONE	1.000000	.	1.000000
2	CALORIES	LL	.5077515+07	.	.5077515+07	NONE	-.000051	.	.000051
3	PROTEIN	BS	.1517093+06	80935.288086	70774.000000	NONE	.	.	.
4	VITAMINA	FR	.4467105+06	.1000515+07	NONE	NONE	.	.	.
5	THIAMIN	BS	6141.136902	3867.136902	2274.000000	NONE	.	.	.
6	RIBOFLAV	FR	1859.359085	1560.640900	NONE	NONE	.	.	.
7	NIACIN	BS	40662.043457	2819.043854	37843.000000	NONE	.	.	.
8	ASCORBIC	FR	3595.679993	61374.319824	NONE	NONE	.	.	.
9	CALCIUM	FR	.3719022+06	.7595978+06	NONE	NONE	.	.	.
10	IRON	BS	49382.661133	12042.661133	37340.000000	NONE	.	.	.
11	LAND	FR	2.949737	2.050263	NONE	NONE	.	.	.
12	HISTIDIN	BS	3761.126313	3667.726318	93.400000	NONE	.	.	.
13	ISOLEUCI	BS	5840.427856	3997.127869	1843.299988	NONE	.	.	.
14	LEUCINE	BS	18076.253906	15194.953857	2881.299988	NONE	.	.	.
15	LYCINE	BS	4797.792847	1769.792877	3028.000000	NONE	.	.	.
16	METH CYS	BS	4446.935852	2475.535858	1971.399994	NONE	.	.	.
17	PHEN TRY	BS	12119.373291	9988.873291	2130.500000	NONE	.	.	.
18	THREONIN	BS	5157.069275	3287.169312	1869.899994	NONE	.	.	.
19	TRYPTOPH	BS	5080.656555	4651.056580	429.599998	NONE	.	.	.
20	VALINE	BS	7325.651001	5306.051025	2019.599991	NONE	.	.	.
21	OIL	LL	50.000000	.	50.000000	NONE	-.423809	.	.423809
22	MAIZE	LL	1430.000000	.	1430.000000	NONE	-.036969	.	.036969
23	BEANS	LL	264.000000	.	264.000000	NONE	-.420462	.	.420462

SECTION 2 - COLUMNS PRIMAL-DUAL OUTPUT

NUMBER	..NAME..	AT	..ACTIVITY..	.INPUT COST.	.LOWER LIMIT	.UPPER LIMIT	REDUCED COST
24	3CROP S	BS	1385.557480	.080000	.	NONE	.
25	3CROP M	BS	1430.000000	.120000	.	NONE	.
26	3CROP B	BS	264.000000	.500000	.	NONE	.
27	OILP	BS	50.000000	.630000	.	NONE	.

Appendix C-9

Solution to Diet 3 Model

SECTION 1 - ROWS PRIMAL-DUAL OUTPUT

NUMBER	..NAME..	AT	..ACTIVITY..	SLACK ACTIVITY	.LOWER LIMIT	.UPPER LIMIT	DUAL ACTIVITY	.INPUT COST.	REDUCED COST
1	OBJ	FR	476.548965	-476.548965	NONE	NONE	1.000000	.	1.000000
2	CALORIES	LL	.5077515+07	.	.5077515+07	NONE	-.000051	.	.000051
3	PROTEIN	BS	.1455323+06	79158.293945	70774.000000	NONE	.	.	.
4	VITAMINA	FR	.4181233+06	.1029102+07	NONE	NONE	.	.	.
5	THIAMIN	BS	5981.938416	3707.938446	2274.000000	NONE	.	.	.
6	RIBOFLAV	FR	1801.996201	1618.003784	NONE	NONE	.	.	.
7	NIACIN	BS	39482.234863	1639.235260	37843.000000	NONE	.	.	.
8	ASCORBIC	FR	3595.679993	61374.319824	NONE	NONE	.	.	.
9	CALCIUM	FR	.3641631+06	.7673369+06	NONE	NONE	.	.	.
10	IRON	BS	47791.352051	10451.352173	37340.000000	NONE	.	.	.
11	LAND	FR	2.892017	2.107983	NONE	NONE	.	.	.
12	HISTIDIN	BS	3732.279815	3638.879822	93.400000	NONE	.	.	.
13	ISOLEUCI	BS	5785.575562	3942.275604	1843.299988	NONE	.	.	.
14	LEUCINE	BS	17700.235107	14818.935181	2881.299988	NONE	.	.	.
15	LYCINE	BS	4816.243103	1788.243103	3028.000000	NONE	.	.	.
16	METH CYS	BS	4425.407898	2454.007935	1971.399994	NONE	.	.	.
17	PHEN TYR	BS	12013.311646	9882.811646	2130.500000	NONE	.	.	.
18	THREONIN	BS	5116.244629	3246.344635	1869.899994	NONE	.	.	.
19	TRYPTOPH	BS	5022.936584	4593.336609	429.599991	NONE	.	.	.
20	VALINE	BS	7270.375488	5250.775513	2019.599991	NONE	.	.	.
21	OIL	LL	50.000000	.	50.000000	NONE	-.423809	.	.423809
22	MAIZE	LL	1430.000000	.	1430.000000	NONE	-.036969	.	.036969
23	BEANS	LL	264.000000	.	264.000000	NONE	-.420462	.	.420462
24	RICE	LL	100.000000	.	100.000000	NONE	-.306044	.	.306044

SECTION 2 - COLUMNS PRIMAL-DUAL OUTPUT

NUMBER	..NAME..	AT	..ACTIVITY..	.INPUT COST.	.LOWER LIMIT	.UPPER LIMIT	REDUCED COST
25	3CROP S	BS	1280.612061	.080000	.	NONE	.
26	3CROP M	BS	1430.000000	.120000	.	NONE	.
27	3CROP B	BS	264.000000	.500000	.	NONE	.
28	OILP	BS	50.000000	.630000	.	NONE	.
29	RICE	BS	100.000000	.390000	.	NONE	.

Appendix C-10

Format for Complete Nutrition Matrix (Food Activity 1 Pound)

Restraint	Yearly Requirement	Relationship	3-Crop Sorghum	3-Crop Maize	3-Crop Beans	Oil	Rice	Eggs	Cheese	Tomatoes	Cabbage
Calories	5,077,515 C	≤	1557	1616	1548	4013	1634	734	1357	86	77
Protein	70,774 g.	≤	45.9	43.1	100.3	0	30.4	55.8	81.7	5.0	5.0
Vitamin A	1,447,225 µg.	≤	272.4	0*	40.9	0	0	1350	1362	918	95.3
Thiamin	2,274 mg.	≤	1.86	2.04	2.45	0	.36	.45	.23	.27	.18
Riboflavin	3,420 mg.	≤	.68	.49	.82	0	.14	1.35	2.13	.18	.14
Niacin	37,843 mg.	≤	18.16	9.08	9.53	0	7.26	.45	1.82	2.25	.91
Ascorbic Acid	64,970 mg.	≥	0	0	13.62	0	0	0	0	103.5	158.9
Calcium	1,132,000 mg.	≤	117.1	31.8	622.0	0	45.5	225.0	735.5	49.5	165.6
Iron	37,340 mg.	≤	19.1	10.4	30.4	0	4.1	11.3	2.3	2.7	1.4
Land	5 mz.	N	.00055	.00076	.00417	0	0	0	0	0	0
Histidine	93.4 g.	≤	.98	1.16	2.82	0	.74	1.35	2.50	.08	.13
Isoleucine	1,843.3 g.	≤	1.79	1.58	4.17	0	1.33	3.50	4.30	.09	.16
Leucine	2,881.3 g.	≤	6.07	5.36	7.58	0	2.61	4.91	8.10	.14	.27
Lycine	3,028.0 g.	≤	.92	1.14	7.17	0	1.15	3.88	7.00	.15	.16
Meth. + Cys.	1,971.4 g.	≤	1.32	1.48	1.90	0	1.17	3.25	2.70	.06	.16
Phen. + Tyr.	2,130.5 g.	≤	3.45	3.72	7.65	0	2.56	5.51	8.65	.15	.36
Threonine	1,869.9 g.	≤	1.38	1.54	3.95	0	1.04	2.[illegible]5	3.26	.11	.28
Tryptophan	429.6 g.	≤	.55	3.02	0	0	0	0	0	0	0
Valine	2,019.6 g.	≤	2.28	2.07	4.57	0	1.84	3.81	6.27	.11	.21
Oil	50 lb.	≤	0	0	0	1	0	0	0	0	0
Maize	1,430 lb.	≥	0	1	0	0	0	0	0	0	00
Beans	264 lb.	≤	0	0	1	0	0	0	0	0	0
Rice	100 lb.	≤	0	0	0	0	1	0	0	0	0
Eggs	50 lb.	≤	0	0	0	0	0	1	0	0	0
Cheese	26 lb.	≤	0	0	0	0	0	0	1	0	0
Sorghum	1,490	≥	1	0	0	0	0	0	0	0	00
Banana	150	≥	0	0	0	0	0	0	0	0	0
Tomatoes	156	≥	0	0	0	0	0	0	0	1	0
Mango	150	≥	0	0	0	0	0	0	0	0	0
Plantain	150	≥	0	0	0	0	0	0	0	0	0
Objective: Minimize Cost of Diet ($ U.S.)			.08	.12	.50	.63	.39	.83	1.50	.27	.20

*White varieties of maize which contain negligible amounts of Vitamin A were used.

Restraint	Plantain	Banana	Powdered Whole Milk	Fresh Milk	Chicken	Potatoes	Mango	Yucca	Wheat Flour	Pork
Calories	341	304	2234	295	554	318	182	491	1653	1707
Protein	3.6	4.1	118.0	15.9	55.8	7.7	1.8	4.1	49.5	44.5
Vitamin A	299.6	190.7	1471.0	190.7	340.5	0	1607.2	0	0	0
Thiamin	.18	.14	1.09	.18	.27	.36	.14	.18	.59	1.54
Riboflavin	.14	.18	5.95	.82	.45	.14	.18	.09	.18	.45
Niacin	1.82	2.27	3.18	.45	22.2	5.44	1.82	1.80	4.99	10.40
Ascorbic Acid	49.9	26.3	18.2	4.5	0	36.3	136.2	121.5	0	0
Calcium	22.7	27.2	4072.4	546.3	31.8	31.8	31.8	112.5	72.6	27.2
Iron	2.3	1.8	3.2	.5	4.1	2.7	.9	2.3	4.5	5.4
Land	0	0	0	0	0	0	0	0	0	0
Histidine	0*	.30	3.29	.41	1.54	.12	0*	.15	1.13	1.77
Isoleucine	0	.11	6.06	.73	3.13	.29	0	.21	1.98	2.27
Leucine	0	.19	11.37	1.48	4.30	.47	0	.29	3.81	3.35
Lycine	0	.16	8.32	1.21	4.65	.37	.195	.30	1.13	4.36
Meth. + Cys.	0	.19	4.04	.51	2.24	.15	0	.20	2.17	2.06
Phen. + Tyr.	0	.26	11.27	1.57	4.29	.52	0	.30	3.89	4.19
Threonine	0	.14	4.83	.69	2.32	.29	0	.19	1.46	2.65
Tryptophan	0	0	0	0	.60	0	.036	.09	.58	.74
Valine	0	.16	7.38	.90	2.98	.36	0	.25	2.24	2.80
Oil	0	0	0	0	0	0	0	0	0	0
Maize	0	0	0	0	0	0	0	0	0	0
Beans	0	0	0	0	0	0	0	0	0	0
Rice	0	0	0	0	0	0	0	0	0	0
Eggs	0	0	0	0	0	0	0	0	0	0
Cheese	0	0	0	0	0	0	0	0	0	0
Sorghum	0	0	0	0	0	0	0	0	0	0
Banana	0	1	0	0	0	0	0	0	0	0
Tomatoes	0	0	0	0	0	0	0	0	0	0
Mango	0	0	0	0	0	0	1	0	0	0
Plantain	1	0	0	0	0	0	0	0	0	0
Objective:	.15	.07	2.15	.37	.73	.25	.15	.20	.24	1.35

*Some amino acid contents not available.

Appendix C-11

Solution for Low Cost Yearly Diet

SECTION 1 - ROWS

PRIMAL-DUAL OUTPUT

NUMBER	..NAME..	AT	..ACTIVITY..	SLACK ACTIVITY	.LOWER LIMIT	.UPPER LIMIT	DUAL ACTIVITY	.INPUT COST	REDUCED COST
1	OBJ	FR	1165.542435	-1165.542435	NONE	NONE	1.000000	.	1.000000
2	CALORIES	BS	.6105742+07	.1028227+07	.5077515+07	NONE	.	.	.
3	PROTEIN	BS	.1944003+06	.1236263+06	70774.000000	NONE	.	.	.
4	VITAMINA	LL	.1447225+07	.	.1447225+07	NONE	-.000340	.	.000340
5	THIAMIN	BS	6769.196960	4495.196960	2274.000000	NONE	.	.	.
6	RIBOFLAV	LL	3420.000000	.	3420.000000	NONE	-.274797	.	.274797
7	NIACIN	BS	45285.907715	7442.907776	37843.000000	NONE	.	.	.
8	ASCORBIC	LL	64970.000000	.	64970.000000	NONE	-.000813	.	.000813
9	CALCIUM	BS	.1230513+07	[illegible]68945	.1131500+07	NONE	.	.	.
10	IRON	BS	55356.617676	18016.617676	37340.000000	NONE	.	.	.
11	LAND	FR	3.007180	1.992820	NONE	NONE	.	.	.
12	HISTIDIN	BS	4878.543640	4785.143616	93.400000	NONE	.	.	.
13	ISOLEUCI	BS	7957.556335	6114.256348	1843.299988	NONE	.	.	.
14	LEUCINE	BS	22090.299316	19208.999268	2881.299988	NONE	.	.	.
15	LYCINE	BS	7398.689941	4370.689941	3028.000000	NONE	.	.	.
16	METH CYS	BS	6048.304626	4076.904663	1971.399994	NONE	.	.	.
17	PHEN TYR	BS	15958.967529	13828.467529	2130.500000	NONE	.	.	.
18	THREONIN	BS	6865.113831	4995.213806	1869.899994	NONE	.	.	.
19	TRYPTOPH	BS	5143.499939	4713.899963	429.599998	NONE	.	.	.
20	VALINE	BS	9901.763672	7882.163635	2019.599991	NONE	.	.	.
21	OIL	LL	50.000000	.	50.000000	NONE	-.630000	.	.630000
22	MAIZE	UL	1430.000000	.	NONE	1430.000000	.028557	.	.028557
23	BEANS	LL	264.000000	.	264.000000	NONE	-.249692	.	.249692
24	RICE	LL	100.000000	.	100.000000	NONE	-.351528	.	.351528
25	EGGS	BS	146.985404	96.986405	50.000000	NONE	.	.	.
26	CHEESE	LL	26.000000	.	26.000000	NONE	-.451578	.	.451578
27	SORHGUM	UL	1490.000000	.	NONE	1490.000000	.199483	.	.199483
28	BANANA	UL	150.000000	.	NONE	150.000000	.065677	.	.065677
29	TOMATOES	UL	156.000000	.	NONE	156.000000	.175705	.	.175705
30	MANGO	UL	150.00000	.	NONE	150.000000	.556618	.	.556618
31	PLANTAIN	UL	150.00000	.	NONE	150.000000	.030890	.	.030890

SECTION 2 - COLUMNS PRIMAL-DUAL OUTPUT

NUMBER	..NAME..	AT	..ACTIVITY..	.INPUT COST.	.LOWER LIMIT	.UPPER LIMIT	REDUCED COST
32	3CROP S	BS	1490.000000	.080000	.	NONE	.
33	3CROP M	BS	1430.000000	.120000	.	NONE	.
34	3CROP B	BS	264.000000	.50000	.	NONE	.
35	OILP	BS	50.000000	.630000	.	NONE	.
36	RICE	BS	100.000000	.390000	.	NONE	.
37	EGGS	BS	146.985405	.830000	.	NONE	.
38	CHEESE	BS	26.000000	1.500000	.	NONE	.
39	TOMATOES	BS	156.000000	.270000	.	NONE	.
40	CABBAGE	BS	62.764009	.200000	.	NONE	.
41	PLANTAIN	BS	150.000000	.150000	.	NONE	.
42	BANANA	BS	150.000000	.070000	.	NONE	.
43	PD MILK	BS	186.544998	2.150000	.	NONE	.
44	FR MILK	LL	.	.370000	.	NONE	.076168
45	CHICKEN	LL	.	.730000	.	NONE	.490565
46	POTATOES	LL	.	.250000	.	NONE	.182030
47	MANGO	BS	150.000000	.150000	.	NONE	.
48	YUCCA	LL	.	.200000	.	NONE	.076535
49	WHEAT FL	LL	.	.240000	.	NONE	.190536
50	PORK	LL	.	1.350000	.	NONE	1.226341

BIBLIOGRAPHY

Apodaca, Anacleto
1952 "Corn and Custom: The Introduction of Hybrid Corn to Spanish American Farmers in New Mexico" in Edward H. Spicer, ed., Human Problems in Technological Change. New York: Russell Sage Foundation.

Arnon, I.
1981 Modernization of Agriculture in Developing Countries. Chichester: John Wiley & Sons.

Ashby, Jacqueline A.
1982 "Technology and Ecology: Implications for Innovation Research in Peasant Agriculture." Rural Sociology 47(2): 234-250.

Beal, G. M., E. M. Rogers and J. M. Bohlen
1957 "Validity of the Concept of Stages in the Adoption Process." Rural Sociology 22:166-168.

Beneke, Raymond R. and Ronald Winterboer
1973 Linear Programming Applications to Agriculture. Ames: Iowa State.

Berg, Alan, Nevin S. Scrimshaw and David L. Call, eds.
1973 Nutrition, National Development and Planning. Cambridge, Massachusetts: MIT Press.

Bressani, R., L. G. Elias, A. E. Allwood Paredas, and M. T. Huezo
1977 "Processing of sorghum by lime-cooking for the preparation of tortillas" in Sorghums and Millets for Human Food, Proceedings of the Ninth Congress of the International Association for Cereal Chemistry. London: Tropical Products Institute.

Brokensha, David and Marion Pearsall, eds.
1969 The Anthropology of Development in Sub-Saharan Africa, Society for Applied Anthropology Monograph No. 10, University Press of Kentucky.

Brown, Lawrence A.
1981 Innovation Diffusion: A New Perspective. London: Methuen.

Brown, Lawrence A., Edward J. Malecki and Aron N. Spector
1976 "Adopter Categories in a Spatial Context: Alternative Explanations for an Empirical Regularity." Rural Sociology 41:99-118.

Cancian, Frank
1979 The Innovator's Situation: Upper-Middle-Class Conservatism in Agricultural Communities. Stanford: Stanford University Press.

Clayton, E. S.
1964 Agrarian Development in Peasant Economies. Oxford: Pergamon.

———
1961 "Economic and Technical Optima in Peasant Agriculture." Journal of Agricultural Economics, May:337-347.

Clark, Colin and Margaret Haswell
1970 The Economics of Subsistence Agriculture. London: Macmillan.

Cox, George W. and Michael D. Atkins
1979 Agricultural Ecology. San Francisco: W. H. Freeman.

Cravioto, R. O., Richmond K. Anderson, Ernest E. Lockhart, Francisco de P. Miranda, and Robert S. Harris
1945 "Composition of Typical Mexican Foods." Journal of Nutrition 29:317-329.

Curnow, R. N. and M. Upton
1975 Discussion report in G. E. Dalton, ed., Study of Agricultural Systems. London: Applied Science.

Dalrymple, D. G.
1971 Survey of Multiple Cropping in Less Developed Nations. Washington: USDA and USAID.

Dalton, E. E., ed.
1975 Study of Agricultural Systems. London: Applied Science.

Dent, J. B. and J. R. Anderson
1971 Systems Analysis in Agricultural Management. Sydney: John Wiley and Sons.

deVries, Egbert, ed.
1966 Social Research and Rural Life in Central America, Mexico, and the Caribbean Region. Bruges: UNESCO.

Duckham, A. N., J. G. W. Jones and E. H. Roberts, eds.
1976 Food Production and Consumption: The Efficiency of Human Food Chains and Nutrient Cycles. Amsterdam: North Holland Publishing.

Duckham, A. N. and G. B. Masefield
1969 Farming Systems of the World. New York: Praeger.

Duetch, Karl W.
1971 "Developmental Change: Some Political Aspects" in J. Paul Leagans and Charles P. Loomis, eds., Behavioral Change in Agriculture. Ithaca: Cornell University Press.

FAO
1970 FAO Nutritional Studies No. 24. Amino-Acid Content of Foods and Biological Data on Proteins. Rome: FAO.

———1954 FAO Nutritional Studies No. 11. Food Composition Tables: Minerals and Vitamins for International Use. Rome: FAO.

FAO/WHO
1974 WHO Monograph Series No. 61. Handbook of Human Nutritional Requirements. Geneva: World Health Organization.

———1973 FAO Nutrition Meetings Report Series No. 52, Energy and Protein Requirements. Rome: FAO.

Foster, George M.
1973 Traditional Societies and Technological Change. New York: Harper and Row.

Francis, C. A.
1979 "Small Farm Cropping Systems in the Tropics," in D. W. Thorne and M. D. Thorne, eds., Water Management and Crop Production. Westport: AVI Press.

Francis, C. A. and J. H. Sanders
1978 "Economic Analysis of Bean and Maize Systems: Monoculture versus Associated Cropping." Field Crops Research 1:319-335.

Hadley, G.
1962 Linear Programming. Reading: Addison-Wesley.

Haswell, Margaret
1973 Tropical Farming Economies. London: Longman.

Heyer, J.
1972 "An Analysis of Peasant Farm Production under Conditions of Uncertainty." Journal of Agricultural Economics, 23 (2):135-146.

Holt, John B.
1971 "Resume" in J. Paul Leagans and Charles P. Loomis, eds., Behavioral Change in Agriculture. Ithaca: Cornell.

Hulse, Joseph H., Evangeline M. Laing and Odette Pearson
1980 Sorghum and the Millets: Their Composition and Nutritive Value. London: Academic.

ICRISAT (International Crops Research Institute for the Semi-Arid Tropics.)
1981 Proceedings of the International Workshop on Intercropping, 10-13 January 1979. Hyderbad: ICRISAT.

———
1980 Proceedings of the International Workshop on Socioeconomic Constraints to Development of Semi-Arid Tropical Agriculture, 19-23 February 1979. Hyderbad: ICRISAT.

Inkeles, Alex and David H. Smith
1974 Becoming Modern. Cambridge: Harvard.

Joy, Leonard
1973 "Food and Nutrition Planning" in Journal of Agricultural Economics, 24 (1):165:193.

Knight, C. Gregory
1974 Ecology and Change: Rural Modernization in an African Community. New York: Academic.

Leagans, J. Paul and Charles P. Loomis, eds.
1971 Behavioral Change in Agriculture. Ithaca: Cornell.

Lionberger, Herbert F.
1960 Adoption of New Ideas and Practices. Ames: Iowa State.

Lipton, M.
1968 "The Theory of the Optimising Peasant." Journal of Development Studies IV (3):327-351.

Loomis, Charles P.
1971 "Social Sciences" in J. Paul Leagans and Charles P. Loomis, eds., Behavioral Change in Agriculture. Ithaca: Cornell.

McLaren, Donald S.
1976 Nutrition in the Community. Chichester: John Wiley and Sons.

Mellor, John W.
1966 The Economics of Agricultural Development. Ithaca: Cornell.

Millikan, M. F. and David Hapgood
1967 No Easy Harvest. Boston: Little, Brown and Co.

Morse, Chandler
1971 "Response" in J. Paul Leagans and Charles P. Loomis, eds., Behavioral Change in Agriculture. Ithaca: Cornell.

Morss, Elliott R., John K. Hatch, Donald R. Mickelwait and Charles F. Sweet
1976 Strategies for Small Farmer Development, 2 vols. Boulder: Westview.

Mosher, Arthur T.
1971 "Agricultural Development" in J. Paul Leagans and Charles P. Loomis, eds., Behavioral Change in Agriculture. Ithaca: Cornell.

Munsell, Hazel E., Louis O. Williams, Louise P. Guild, Cynthia B. Troescher, Gertrude Nightengale, and Robert S. Harris
1949 "Composition of Food Plants of Central America. I. Honduras." Food Research 14:144-164.

Netting, Robert McC.
1972 Hill Farmers of Nigeria. Seattle: University of Washington.

Nicholls, L.
1961 Tropical Nutrition and Dietetics. London: Failliere, Tindall and Cox.

Nolasco, Rigoberto e Benjamin Bustamante
1980 Projecto Sorgo. Choluteca, Honduras: Informe Anual Secretaria de Recursos Naturales.

Norman, David W.
1974 "Rationalizing Mixed Cropping under Indigenous Conditions: the Example of Northern Nigeria." Journal of Development Studies 10:3-21.

Norman, M. J. T.
1979 Annual Cropping Systems in the Tropics. Gainesville: University of Florida.

Papendick, R. I., P. A. Sanchez and G. B. Triplett
1976 Multiple Cropping, Special Publication 27, American Society of Agronomy. Madison, Wisconsin.

Parsons, Kenneth H.
1971 "Agricultural Economics" in J. Paul Leagans and Charles P. Loomis, eds., Behavioral Change in Agriculture. Ithaca: Cornell.

———1966 "Tenure and Labour Aspects of Agricultural Development." in Egbert de Vries, ed., Social Research and Rural Life in Central America, Mexico and the Carribbean. Bruges: UNESCO.

Poleman, Thomas T.
1964 The Papaloapan Project. Stanford: Stanford University.

Richards, Audrey I.
1951 Land, Labour and Diet in Northern Rhodesia. London: Oxford.

Rogers, Everett M.
1969a Modernization Among Peasants: The Impact of Communication. New York: Holt, Rinehart and Winston.

———1969b "Motivations, Values, and Attitudes of Subsistence Farmers: Toward a Subculture of Peasantry." in Clifton R. Wharton, Jr., ed., Subsistence Agriculture and Economic Development. Chicago: Aldine.

Rogers, Everett M. and F. Floyd Shoemaker
1971 Communication of Innovations. New York: Free Press.

Ruthenberg, H.
1976 Farming Systems in the Tropics. Oxford: Clarendon.

Ryan, Bryce and Neal C. Gross
1950 Acceptance and Diffusion of Hybrid Seed Corn in Two Iowa Communities. Ames: Iowa Agricultural Experiment Station Research Bulletin 372.

———1943 "The Diffusion of Hybrid Seed Corn in Two Iowa Communities." Rural Sociology 8:15-24.

Schultz, Theodor W.
1964 Transforming Traditional Agriculture. New Haven: Yale.

Selltiz, Claire, Lawrence S. Wrightsman and Stuart W. Cook
1976 Research Methods in Social Relations. New York: Holt, Rinehart and Winston.

Severinghaus, E. L.
1976 "Role of Private Organizations in Nutrition" in Donald S. McClaren, ed., Nutrition in the Community. Chichester: John Wiley and Sons.

Smith, Victor E.
1970 "Agricultural Planning and Nutrient Availability." Nutrition Review 28(6):143-150.

———1964 Electronic Computation of Human Diets. East Lansing: Michigan State University.

Spicer, Edward H.
1952 Human Problems in Technological Change. New York: Russell Sage Foundation.

Sturt, Daniel W.
1965 "Producer Response to Technological Change in West Pakistan." Journal of Farm Economics 47:625-633.

UN Economic Commission for Latin America
1981 Economic Survey of Latin America. Santiago: UN.

U.S. Department of Agriculture
1975 Nutritive Value of American Foods in Common Units. Agriculture Handbook No. 456. Washington: USDA.

Wallman, Sandra
1969 "The Farmech Mechanization Project, Basutoland (Lesotho)" in David Brokensha and Marion Pearsall, eds., The Anthropology of Development in Sub-Saharan Africa. Society for Applied Anthropology Monograph No. 10: University Press of Kentucky.

Weeks, John
1970 "Uncertainty, Risk and Wealth and Income Distribution in Peasant Agriculture." Journal of Development Studies 7: 28-36.

Wharton, Clifton R., ed.
1969a Subsistence Agriculture and Economic Development. Chicago: Aldine.

———1969b "Subsistence Agriculture: Concepts and Scope" in Clifton R. Wharton, ed., Subsistence Agriculture and Economic Development. Chicago: Aldine.

Wilson, Eva D., Katherine H. Fisher and Mary E. Fuqua
1975 Principles of Nutrition. New York: John Wiley and Sons.

Wolf, Eric
1955 "Types of Latin American Peasantry." American Anthropologist 57:452-469.

END