PN-AAQ-998

ENERGY POLICY AND PLANNING ASSISTANCE
TO DEMOCRATIC REPUBLIC OF THE SUDAN

LONG-RANGE ELECTRICITY FUTURES FOR SUDAN: TWO SCENARIOS 1982-2000

PROJECT REPORT NO.2

PREPARED FOR

U.S. Agency For International
Development (USAID)
Contract No. DAN:5703:C:00:1024

SEPTEMBER, 1981

BY

INTERNATIONAL SCIENCE AND
TECHNOLOGY INSTITUTE, INC.,

E/DI ENERGY DEVELOPMENT
INTERNATIONAL, INC.

PN-AAQ 998
ISN 36539

LONG-RANGE ELECTRICITY FUTURES FOR SUDAN : TWO SCENARIOS 1982-2000

SEPTEMBER, 1981

Prepared By

SHIBU B. DHAR
Consultant

Acknowledgement

The International Science and Technology Institute, Inc., Energy/Development International and this consultant wish to express their indebtedness to Dr. Shareff El-Touhami, Minister of Energy and Mines, and to Mr. Mohammed El-Amin Mukhtar, Director General of the National Energy Administration, for their guidance and encouragement during the course of this work. Appreciation is also extended to the following professionals for their helpful advice and assistance during the course of this research work:

- Abdel Bagi Osman
- Ahmed El-Zein El-Hassan
- Dr. John Gindi Boutros
- Moh'd El-Amin Suleiman
- Abdel Satar Ali
- Amin Sabri
- Abbas Hiddayat-Allah
- Ishag Adam El-Beshir
- Jaafer El-Faki Ali
- Shyed Hamza
- Ms. Michele Foster

Abstract

The PEWC has reached a crucial stage in its planning process for long-range hydro-electric resource development in Sudan. The Power III and Power IV projects will alleviate the capacity and energy shortages for the 1980s only. However, if new baseload generating capacities are not developed by 1990/91, severe power shortages would develop in the PEWC service area, especially during the periods of peak power use. Operating with insufficient generating capacity to meet customers' demand will expose the entire system to collapse in the 1990s.

This report explores two alternative electrical energy scenarios of Sudan's future. The first, labeled "Conventional Outlook" (Scenario #1), also intended to represent what would likely occur in the 1990s without additional actions to redirect long established trends of electric energy utilization and development process. The second scenario (Scenario #2) labeled "Alternative Resources," was constructed to examine an achievable practical future which maximized reliance on hydro-electric resources and cut back on oil-fired generation significantly by the year 2000. Both scenarios are examined separately for the Blue Nile Grid service area and on a national long-range prospective.

This report should not be construed as a complete economic analysis of the PEWC's long-range generating capacity requirements for the study period. The scope of the analysis pertains only to the regional and national electric generating capacity need assessment for the 1982 to 2000 period.

Table Of Contents

ACKNOWLEDGEMENT i

ABSTRACT ii

TABLE OF CONTENTS iii

A. EXECUTIVE SUMMARY 1

B. RECOMMENDATIONS 8

CHAPTER 1: INTRODUCTION 12

1.1 SCOPE OF THE REPORT 14

CHAPTER 2: CRITERIA FOR LONG-RANGE RESOURCE EVALUATION 18

2.1 DEMAND GROWTH 19

2.2 RESERVE MARGIN 19

2.2.1 DEFINITIONS 21

2.2.2 CRITERIA FOR SHORT-RANGE (1 TO 5 YEARS) 23

2.2.3 CRITERIA FOR LONG-RANGE (5 TO 20 YEARS) 24

2.3 CAPACITY REQUIREMENTS 25

2.4 FUEL DISPLACEMENT 25

CHAPTER 3: ELECTRICITY DEMAND AND GROWTH - PAST AND PROSPECTIVE 28

3.1 HISTORICAL PATTERN 29

3.2 THE BLUE NILE GRID 33

3.2.1 PEAK LOAD AND ENERGY 36

3.3 DEMAND FORECASTS FOR DISPERSED AREAS 43

3.4 SUMMARY OF DEMAND PROJECTIONS 45

CHAPTER 4: LONG-RANGE CAPACITY EXPANSION PLANS 55

4.1 POWER III AND POWER IV GENERATION EXPANSION PLAN 56

4.2 LONG-RANGE HYDRO-ELECTRIC GENERATION EXPANSION PROGRAM 56

4.3 DISPERSED GENERATION EXPANSION PROGRAM 63

4.4 MAINTENANCE AND RETIREMENT REQUIREMENTS 68

4.4.1 RETIREMENT SCHEDULE 69

CHAPTER 5: ANALYSIS OF SCENARIO # 1 (CONVENTIONAL LONG-RANGE OUTLOOK) 75

5.1 CRITERIA FOR SCENARIO ANALYSIS 75

5.1.1 RESERVE MARGIN REQUIREMENT 75

5.1.2 CAPACITY REQUIREMENTS 75

5.1.3 FUEL DISPLACEMENT 75

5.1.4 RESERVE MARGIN CRITERION FOR NATIONAL SYSTEM 78

5.1.5 MAINTENANCE OUTAGE 78

5.2 LONG-RANGE OUTLOOK OF BNG SERVICE AREA 78

5.3 NATIONAL OUTLOOK OF SCENARIO #1 83

5.4 CONCLUSIONS 92

CHAPTER 6: ANALYSIS OF SCENARIO #2 (ALTERNATIVE RESOURCES) 95

6.1 ALTERNATIVE RESOURCE DEVELOPMENT PROGRAM 97

6.1.1 SMALL HYDROELECTRIC AND CO-GENERATION POTENTIAL 98

6.2 RESOURCE MIX OF SCENARIO #2 99

6.3 RESERVE MARGIN ANALYSIS FOR BNG SYSTEM 99

6.3.1 ALTERNATIVES OF SCENARIO #2 102

6.4 NATIONAL OUTLOOK OF SCENARIO #2 111

6.5 DISCUSSION 115

A. Executive Summary

Until the decade of the 1980s decisions about electric energy issues were made in a relatively straightforward alomost automatic, manner in Sudan. Energy demand was a function of technological profress, economic growth, and population; energy supply was planned and provided by Public Electricity and Water Corporation (PEWC) to meet existing and projected needs. An important part of this planning was the use of quantifiable technical and economic criteria, about which there was little or no debate. The system appeared to work well; a plentiful and reliable supply of electric energy was available to meet socieyy's growing demands, and at a declining real cost.

Beginning in the 1980s, however, PEWC faced the challende of runaway growth in the projected demand for electrical energy in the 1980s and 1990s. The decision making process for power supply planning became much more complicated. New concerns arose over such issues as to what extent the dependence on foreign energy sources (imported oil) could create a vulnerability to disruption of supply, and an awareness that fossil fuels are finite resources that could be depleted in the foreseeable future.

A total of about 300 MW of capacity will be added to the PEWC system during the 1980s, of which 60 percent of the generating capacities are thermal. Analysis of energy use in the 1990s shows that nationally 74 percent of the generating capacity will be thermal if no new hydro-electric resources are developed by 1990/91. Without expediting hydro-electric

resource development programs during the 1990s, prolonged power shortages resulting from either insufficient capacity or lack of fuel either could result in economic chaos in Sudan.

This report is a critique of the "Nile Waters Study Reports" hydro-electric supply plans. Therefore, it establishes the foundation for the examining alternatives. Described in this report are two alternative electricity development scenarios of Sidan. Scenario #1 is labeled as the "Conventional Outlook" scenario and is intended to represent what would likely occur if the "Nile Waters Study Reports" recoomendations are followed for a long-range planning process. The second scenario, labeled "Alternative Resources," is constructed to examine an achievable, partical future which is based on expediting hydro resource development to reduce the current trend of high fossil fuel utilization.

The hydro-electric resource examined for expedited developed is the lower Merowe site.

Based on the results of this study, the following major conclusions were drawn:

1. The average annual compound peak load growth for the BNG region from 1982 through 2000 is estimated to be 8.2 percent. This anticipated load growth represents a reduction from the 10.5 percent growth projected in 1978 for the 1981-1990 ten year period. Total energy requirements are anticipated to increase at an average annual compound rate of 6 percent through the year 2000.

The long-range capacity and energy demands for 1984/85, 1990/91, 1994/95, and 1999/2000 are as follows:

Year	1984/85	1990/91	1994/95	1999/2000
Energy Generation (GWh)	1600	2570	3521	5224
Peak Demand (MW)	304	489	670	994

2. The summary of noncoincident peak demand and energy forecasts for the other dispersed areas are as follows:

Year	1984/85	1990/91	1994/95	1999/2000
Energy Generation (GWh)	483	964	1629	2297
Peak Demand (MW)	995	225	375.5	533

3. To maintain an adequate reserve margin for scheduled maintenance and other contingencies, the following generating capacities (MW) will be required for the study period:

Year	1984/85	1989/90	1994/95	1999/2000
BNG Service Area	365	578	858	1272
Total National Requirement	525	880	1360	1985

4. The planned reserve margins of Scenario #1 for the 1990s are as follows:

a. BNG SERVICE AREA

Year	91	92	93	94	95	96	97*	98	99	2000
Planned Reserve Margins (Percent)	16.5	4.3	-4.1	-12.9	-19.9	-26.0	43.0	31.4	19.6	10.4
Long-Range Planning Criteria (Percent)	28	28	28	28	28	28	28	28	28	28

* Lower Merowe on-line.

b. NATIONAL OUTLOOK

Year	1984/85	1989/90	1994/95	1999/2000
Planned Reserve Margins (Percent)	4.4	12.2	-43.3	-25.47
Long Range Planning Criteria (Percent)	25	25	25	25

Note: Planning reserve margin includes provisions for forced outages, scheduled maintenances, and load forecast uncertainties.

5. If additional hydro-electric resources are not developed for the long-range period, the following thermal (oil-fired) capacities will be required to maintain a reliable electricity supply in Sudan under Scenario #1

Year	1984/85	1989/90	1994/95	1999/2000
Additional Thermal Capacity Requirements for Scenario #1	277 MW	522 MW	1002 MW	1027 MW

6. To alleviate the course of high oil-fired generation system in the 1990s, it has been recommended to expedite the hydro-electric resource development of lower Merowe site in the following three phases:

Phase	Merowe On-Line Year	Total
Phase I	1990/91 - 200 MW	200 MW
Phase II	1992/93 - 200 MW	400 MW
Phase III	1995/96 - 200 MW	600 MW

7. The report has identified over 350 MW of distributed alternative energy resources for the dispersed loads in Sudan which could be developed during the study period. The distributed energy systems include small hydro-electric resources, cogeneration, biomass, wind and solar.

8. The national outlook (BNG plus other areas) of Scenario #2 with energy conservation and alternative renewable resources is as follows:

Year	1984/85	1990/91	1994/95	1999/2000
Peak Demand (MW)	382	697	991	1459
Installed Capacity (MW)	422	884	1448	1663
Reserve Margin (Percent)	10.4	26.8	46.1	14.3

9. The comparison of national electric energy resource mix of two scenarios for the year 2000 is as follows:

Scenario	Hydro	Thermal	Other
Scenario #1	48%	52%	--
Scenario #2	90%	8%	2%

10. Escalating costs for fuels (imported oil) and equipment for Scenario #1 would significantly increase electricity prices in Sudan in 18 years. The nation as a whole will be more vulnerable to foreign oil price increase or disruption of supplies.

B. Recommendations

This report has examined the implications of continuing current trends and recommendations of the "Nile Waters Study Reports" for long-range electricity production and use and has examined whether a further re-direction of these trends toward the use of more alternative resources and conservation would be desireable for a long-range horizon in Sudan. The following recommendations should be considered for long-range power system development in Sudan:

1. Initiate immediately a feasibility and cost/benefit study for the expedited development of the lower Merowe hydro-electric power plant. The development of the lower Merowe site should be considered in three phases as discussed in this report. The hydro-electric generating capacity of Phase I is 200 MW and should be on-line by 1991.

2. Directing energy investment into alternative electric generation technologies is essential to meeting future electricity needs in an economically and environmentally sound manner. These alternative technologies include small hydro-electric facilities, cogeneration and turbine generators, solar photovoltaics cells, fuel cells, solar ponds, and biomass combustion.

   The alternative technologies are generally smaller in scale, they require fewer front and capital expenditures and have much shorter time spans between planning, construction, and operation; thus,

they offer more flexibility and less financial risk for utilities in trying to meet changing levels of electricity needs.

Initiate a study to determine the potential for alternative resources in Sudan by the year 2000. The major emphasis should be on the small hydro-electric facility development for dispersed load centers and cogeneration.

3. During the period in which Sudan moves to evaluate its electric energy alternatives, one thing is certain: energy conservation must become a way of life for everyone. PEWC simply does not have the lead time nor the means with which to increase its electric energy supplies immediately, and increased dependence upon foreign energy sources will be at least costly and at worst short-sighted and risky.

   Therefore, the reduction of the oil-fired generating capacity should be a corporate process goal of PEWC for the long-range planning process.

4. The PEWC needs to develop proper incentives for energy conservation, including:

   - true value pricing of all energy sources
   - greater understanding of short-range and long-range supply options and implications

- desire for voluntary conservation programs (demand and energy reduction) in lieu of mandatory programs

Commercial and industrial energy users should analyze their present energy use systems and levels of use for the study period to determine where greater savings can be made.

5. The government and utility regulatory bodies should adopt, as a fundamental planning goal, a 50 percent reduction from 1990 levels in nationwide fuel use in oil fired power plants by the year 2000.

6. The Government and the Ministry of Energy Administration should jointly establish a comprehensive national policy for guiding the growth of electric energy service, hydro-electric, and alternative resources development in Sudan for the study period. This action is necessary to ensure that utilities make appropriate investment in energy conservation and alternative energy resources.

7. The PEWC should develop comprehensive long-range conservation planning capabilities on a par with their resource planning capabilities.

8. Develop a long-range bulk power transmission plan and investigate the timing and cost/benefit of the Blue Nile Grid System, Easterm Grid System and Red Sea area interconnections.

Chapter 1: Introduction

The Sudan has serious electricity problems, due largely to the fact that electricity demand has exceeded energy production since 1975 - a gap that has widened to the point where shortages are evident and emergency curtailments of use are necessary. Even though the global energy problems were brought into much sharper focus by the OPEC oil price increases, the roots of problems in Sudan can be found in trends in electricity consumption (growth rate) and production that have persisted for some time. The electricity energy use grew at an average rate of 11 percent per year from 1974 to 1979. Since that time, it has slightly decreased at a rate of 9 percent annually, reaching a total consumption level of 1,539 GWh in 1981. The forecasted energy demand for 1999/2000 is about 7,521 GWh, an increase of five fold. The corresponding national peak demand for the years 1981 and 2000 are 303 MW and 1,527 MW respectively.

The Public Electricity and Water Corporation (PEWC) is the main producer and sole distributor of electricity in the Sudan, generating about 90 percent of the total electricity produced in the country. The remainder comes from industries and agricultural pumping stations with their own generating sources, and their share of energy production has been growing in recent years due to the unavailability of adequate power from PEWC. PEWC operates the main Blue Nile Grid (which supplied Khartoum, several other urban areas on the Blue Nile, and the nation's main irrigated schemes), and 16 other municipal power stations. Of the 16 smaller systems, only one, in Eastern Sudan, involves two or more interconnected power plants feeding major load centers.

Previous Page Blank

In Sudan, from the present level of about 300 MW of peak demand (BNG plus other systems), the national peak demand will increase to about 690 MW in 1990 and 1,527 MW in the year 2000. In other words, if a capacity reserve margin of 30 percent is considered for contingencies such as forced outage and scheduled maintenance requirements, the national requirements for power generation will increase to about 897 MW in 1990 and 1,985 MW in the year 2000.

The long-range Nile Waters Study carried out by British Consultants (Sir Alexander Gibb and Partners, Sir M. Macdonald and Partners, Hunting Technical Services Limited and Coyne ET Bellier) for the Ministry of Irrigation has recommended a total of 958 MW hydro-electric resource development in Sudan by the end of this century. From a national perspective, this means approximately 52 percent of the electric energy will be supplied in Sudan by the year 2000 from nonhydro resources, i.e., primarily thermal, oil and gas. During the short-range capacity expansion programs, Power III and Power IV, a total of 355 MW will be added to the BNG system of which 66 percent of generating capacity is thermal (120 MW Roseires).

Economic and financial constraints will affect the electricity planning in the 1980s. Though somewhat improved after Power III and IV projects, the PEWC in the long-run is still hampered by the economic consequences of high dependency on oil and gas-fired plants if the current trend of generation expansion continues. The PEWC management bodies need to develop long-term national electricity strategies to put utility in a position to take advantage of national hydro resources and other alternative energy sources. Part of that strategy is to convince Government

and ratepayers that investment in renewable alternatives (hydro and solar) and conservation are sound and necessary, because these options promise a realistic solution to the OPEC-induced inflation in utility rates.

1.1 SCOPE OF THIS REPORT

This report presents an evaluation of the feasibility and implications of long-range electricity supply plans, formulated by the Ministry of Irrigation, to meet the national forecasted energy and capacity demands. The primary emphasis is on the hydro resource development during the study period (1982 - 2000). This report is a critique of the Nile Waters Study Reports hydro-electric supply plans; therefore, it established the foundation for examining the alternatives.

Two scenarios were selected to explore Sudan's national electric energy future. The first was labeled a "Conventional Outlook" scenario (Scenario I) and was intended to represent what would likely occur without additional actions to redirect established trends in electricity generation and utilization as proposed by the Ministry of Irrigation reports (Nile Water Study Reports). The second scenario, labeled "Alternative Resources", was constructed to examine an achievable, practical future which minimized reliance on the use of conventional thermal resources and cut back on oil use significantly. The second scenario (Scenario II) is based on expediate hydro-resource development to reduce the current trend of high fossil fuel utilization. Both scenarios span the year 1982

to 2000.

The report is structured into seven chapters:

- CHAPTER 1: INTRODUCTION - defines the long-range electricity development requirements and the objectives of the report.

- CHAPTER 2: CRITERIA FOR LONG-RANGE RESOURCE EVALUATION - presents a review of reserve margin criteria for power system planning and develops oil-based generation capacity displacement requirements to reduce the vulnerability of foreign oil imports.

- CHAPTER 3: ELECTRICITY DEMAND GROWTH - PAST AND PROSPECTIVE - reviews the PEWC forecasts of energy and capacity requirements for the regional systems and develops a total national electricity demand forecast for the study period.

- CHAPTER 4: EXISTING GENERATING CAPACITY AND FUTURE EXPANSION PLANS - presents a review of Power III, Power IV and long-range hydro-electric development programs as proposed in the Nile Waters Study Reports. Also, this chapter develops a retirement schedule for thermal generating units for the study period.

- CHAPTER 5: ANALYSIS OF SCENARIO #1 - the long-range capacity and energy supply/demand balance for the "conventional trend" is analyzed based on the criteria of Chapter 2.

- CHAPTER 6: ANALYSIS OF SCENARIO #2 - the long-range capacity and energy supply/demand balanced for the "Alternative Resources" is analyzed based on the criteria of Chapter 2.

The long-term estimation of the PEWC load growth and possible generating capacity expansion after the completion of the Power III and IV projects and the implications of two scenarios are analyzed in the following sections.

Chapter 2: Criteria For Long-Range Resource Evaluation

The development of power system long-range planning criteria is a matter of balancing the cost of providing additions to the system against the risks and interruption of supply or socioeconomic and environmental degradation, etc. In many cases, it is hard to put specific figures on the risks (e.g., economic cost of power outages), and hence, judgement and experience intervene. When conceptual plans are prepared for the future expansion of a power system, no matter how soundly these plans may be based, it is always possible for someone with a reasonably inventive mind to conceive some set of circumstances in which the particular planned development will not work. Accordingly, it is first necessary to draw up a set of tentative standards and/or criteria by which a resource development requirement can be evaluated or considered. Such standards are vital to give the resource evaluation process a consistent basis from one year to another and from one area to another in a country. The set standards on resource evaluation criteria must be:

a. Clearly understandable to those making the decisions
b. Usable from the system planner's point of view
c. Agreed and accepted by those interested, and
d. Subject to amendment or alteration in the light of experience

This report develops the need for new electrical energy and capacity into the following four components:

Previous Page Blank

1. Demand Growth
2. Reserve Margin
3. Capacity Retirements
4. Fuel Displacement

2.1 DEMAND GROWTH

Demand growth is defined supply as the increase in peak demand and energy requirements from 1982 to 2000. The 1980 Development Plan for electricity forecasts are used to develop the regional and national demands for the study period.

2.2 RESERVE MARGIN

A reserve margin is the number of megawatts of capacity needed beyond the expected peak demand to avoid blackouts if some generation becomes inoperable at the time of peak demand. It does not apply to energy, only capacity. In analyzing reserve margin, existing resources become important. PEWC, for example, currently has an actual reserve margin well below the optimum planning reserve margin; just adding enough capacity to meet load growth will not give it an adequate planning reserve margin. The reserve margin component of need is calculated by adopting a value for the appropriate reserve, in percentage terms. That value is converted to a number of megawatts. The existing resources and the allowance for new capacity to meet demand growth are then subtracted, leaving the reserve margin required for reliability.

The appropriate reserve percentage is based on the mix of resources, both current and expected, and the projected outage rate of each resource. Potential failures in transmission lines as well as power plants must be considered. Existing systems vary in their expected outages--hydroelectric plants are more reliable than oil plants, for example.

There is no reserve margin that applied to a system will assure its absolute reliability. The magnitude of a system's reserve depends upon the nature of the system, the characteristics of the load and the reliability of service desired. There are many methods utilized by the electric utility industry to determine "proper" reserve margins. The various methods used by electric utilities to determine reserve requirements can be broken down into two broad groups: the non-probabilistic and probabilistic. Non-probabilistic reserve capacity requirements are generally based on a minimum capacity level over the annual or seasonal peak load. The more common non-probabilistic methods are the standard percent reserve and loss of the largest unit. These methods are easy to understand and simple to compute. Inherent with these methods is the inability to measure, in a quantitative manner, the reliability associated with various levels of reserve capacity or combination of generating facilities.

In the standard percent reserve method, some fixed percentage of the utility's forecasted peak load is used as the required reserve. The utility's own historical reliability record usually determines the fixed percent. With this method, changes in load patterns,

generation mix, and the availability of generating facilities are either ignored or incorporated with gross assumptions. It is noted that a constant percent reserve may not provide the same reliability for future system conditions as for past conditions and could result in excess generation facilities or inadequate reliability due to insufficient reserves.

The probabilistic methods are more complex and require a computer to perform the calculations. They generally interrelate a capacity model with a load model. Such a method permits a desired probability level of generator availability to be designed into the system. With a standard reliability level, the reserve margin is variable, dependent on changing load characteristics and the size and availability of various generating units. This method of determining reserve requirements provides an analytical means for evaluating the relative risk of supplying system load requirements with various generation combinations.

2.2.1 DEFINITIONS

The following definitions are used for the purpose of developing the reserve margin criteria for the PEWC system:

a. Synchronized Reserve

The unused portion of generating capacity which is synchronized to the system and ready to pick up load to

claim capacity and capacity which can be made available by curtailing interruptible loads. Therefore:

Synchronized Reserve	=	Spinning Reserve	+	Interruptible Loads

b. Non-Synchronized Reserve

The portion of generating capacity which is available for synchronization to the system within 0-10 minutes and capacity which can be made available by curtailing load to the extent that such curtailment is under the control of the system dispatcher. Therefore:

Non-Synchronized Reserve	=	Standby Reserve	+	Interruptible Loads

c. Ten-Minute Reserve

The sum of synchronized and non-synchronized reserve which is fully available in ten minutes to compensate for short-term load increases and unexpected loss of system facilities.

d. Thirty-Minute Reserve

The sum of synchronized and non-synchronized reserve that can be utilized in thirty minutes excluding capacity

assigned to tem minute reserve.

e. Daily Operating Reserve

The sum of ten-minute and thirty-minute reserve.

f. Reserve for Load Following

The portion of synchronized reserve which is under the command of an automatic controller or a computer to respond to load demands without need for manual action.

g. First Contingency Loss

The largest capacity outage including any assigned ten-minute reserve which would result from the loss of a single generator, circuit, transformer, or bus section.

h. Second Contingency Loss

The largest capacity outage which would result from the loss of a single generator, circuit, transformer, or bus section after allowing for the first contingency loss.

2.2.2 CRITERIA FOR SHORT-RANGE (1 TO 5 YEARS)

All system reliability and capacity adequacy requirements

for the short-range period will be based on the PEWC's operating reserve requirement. The minimum requirements for the operating reserve are as follows to cover the following system conditions:

a. The ten-minute reserve in system shall at least equal its first contingency loss.

b. Reserve for Load Following

   At least one-third of system's ten-minute reserve requirement shall be on automatic generation control.

c. The PEWC normally shall maintain sufficient thirty-minute reserve to cover one-half of its second contingency loss.

2.2.3 CRITERIA FOR LONG-RANGE (5 TO 20 YEARS)

For the long-range period, the PEWC shall maintain the equivalent reliability level of short-range year's reserve margin plus the reserve capacities to cover the following contingencies.

a. A three percent extra reserve capacity to cover the uncertainty of system peak demand.

b. Extra reserve capacity to cover the slippage of the largest generating unit is scheduled to be on-line before the peak month. If the unit is scheduled to be on-line after the peak month, this additional reserve capacity should not be included in the non-operating years reserve capacity determination for the short-range period.

2.3 CAPACITY RETIREMENTS

Just allowing enough new capacity to cope with load growth and attaining or maintaining an adequate reserve margin is not enough, because not all of the current system will still exist in 2000. Therefore, the Commission has looked at units which can be expected to be either retired or derated by 2000, and found a corresponding need for new capacity and energy.

2.4 FUEL DISPLACEMENT

The first three components of need are sufficient to insure reliable electricity service without undue risk or blackouts, brownouts, or rotating outages. In meeting the further requirements of reducing the vulnerability of imported oil. This report has looked at the oil consumption of the national prospective for the conventional trend (Scenario #1).

Today, about forty percent of the electricity in Sudan in generated by burning oil and gas. Both are expensive, both depend on imports,

and both are subject to interruption although these disadvantages affect oil much more than gas. During the study period (1982 - 2000) over 40 MW of dispersed diesel generating capacities will be added in the rural areas in Sudan. Also, over 60 percent thermal generating capacities will be added to the BNG system alone.

Thus, additional resources beyond those necessary to meet need criteria "one" through "three" should be built to displace fuels now used in oil and gas fired power plants - provided those additional resources are relatively cheap, secure, and clean. Also, much capital has already beeen invested in oil and gas-using plants; it is not in Sudan's interest to abandon its newest and cleanest plants.

Therefore, for the long-range power development in Sudan, while some fuel displacement is clearly desirable, oil displacement is not an absolute goal. The two scenarios have been analyzed based on a criterion of maximum 25 percent thermal generation (oil and gas) by the end of the study period (i.e., year 2000).

Chapter 3: Electricity Demand And Growth Past And Prospective

The demand for electricity can be measured in two ways. Users consume electrical energy, measured in kilowatt-hours (kWh), and pay for it in their electric bills. To supply electricity at the rate users want to consume it requires electrical capacity, measured in megawatts (MW). The annual energy requirement of a utility is the number of millions of kilowatt-hours (kWh), or gigawatt-hours (GWh), it must generate to meet consumer needs. Its peak capacity is the number of MW required when consumers are using electricity at the greatest rate. For the PEWC system, peak demand occurs on a summer afternoon when many air conditioners are in use in addition to normal consumption.

To be sure that they could maintain a reliable supply of electrical energy to meet their customers' needs, the PEWC has always planned ahead, using various methods to predict or forecast just how much energy consumers would want and how much capacity will be needed to provide that energy. Forecasters have always measured the demand for electricity in terms of both energy and capacity.

The more rapidly demand grows, the more raidly generating capacity must be added to the system. The first task of any resource evaluation is therefore to project electricity demand growth for the study period. This chapter reviews past trends in electricity demand growth for the Blue Nile Grid (BNG) system, other dispersed areas where electricity will be supplied during the study period and considers factors that may

Previous Page Blank

influence future regional and national electricity demands.

The energy and capacity forecasts presented in this chapter indicate, however, that the trends of the past decade may have been altered by a variety of new factors affecting electricity sypply and demand in Sudan, including:

a. The uncertain availability and price of imported oil

b. Financial constraints

c. Energy conservation efforts

d. The increased costs of facilities to produce and distribute energy

Consequently, it is no longer particularly useful to project into the future on the basis of what happened in the past. More sophisticated techniques are required to take into account the effects of bad management, conservation, economic growth rates and other factors which will ultimate system demand. The historical analysis remains of interest, however, in that it provides background and perspective for assessment of electric load forecasts.

3.1 HISTORICAL PATTERN

PEWC develops its market forecast on the basis of an analysis of

historical trends and knowledge of major projects that will have an impact on electricity demand over the medium-term future. The market forecast presented here is based on PEWC "1980 Development Plan Report." Historical development of the power market from 70/71 to 79/80 with growth expressed in terms of peak demands can be characterized by three different periods:

a. 1970/1973, when the growth rate averaged 10.3 percent per year;

b. 1973/1976, when the growth rate declined 5.3 percent in response to increases in the real average price of electricity in Sudan; and

c. 1976/1980, when demand grew at a average rate of 11.0 percent per year.

Figure 3.1 and 3.2 show how the peak load and energy demand have grown for the BNG system since 1970. The peak load increased from 63 MW in the summer (May) of 1970/71 to 145 MW in the summer of 1979/80, which is equivalent to an average annual growth rate of 10 percent. Similarly, Figure 3.2 illustrates the historical trends of energy production in the BNG service area which supplied approximately 90 percent of total electrical energy in Sudan during 1970 - 1980. The average annual growth rate of energy demand is about 10.3 percent.

FIGURE 3.1

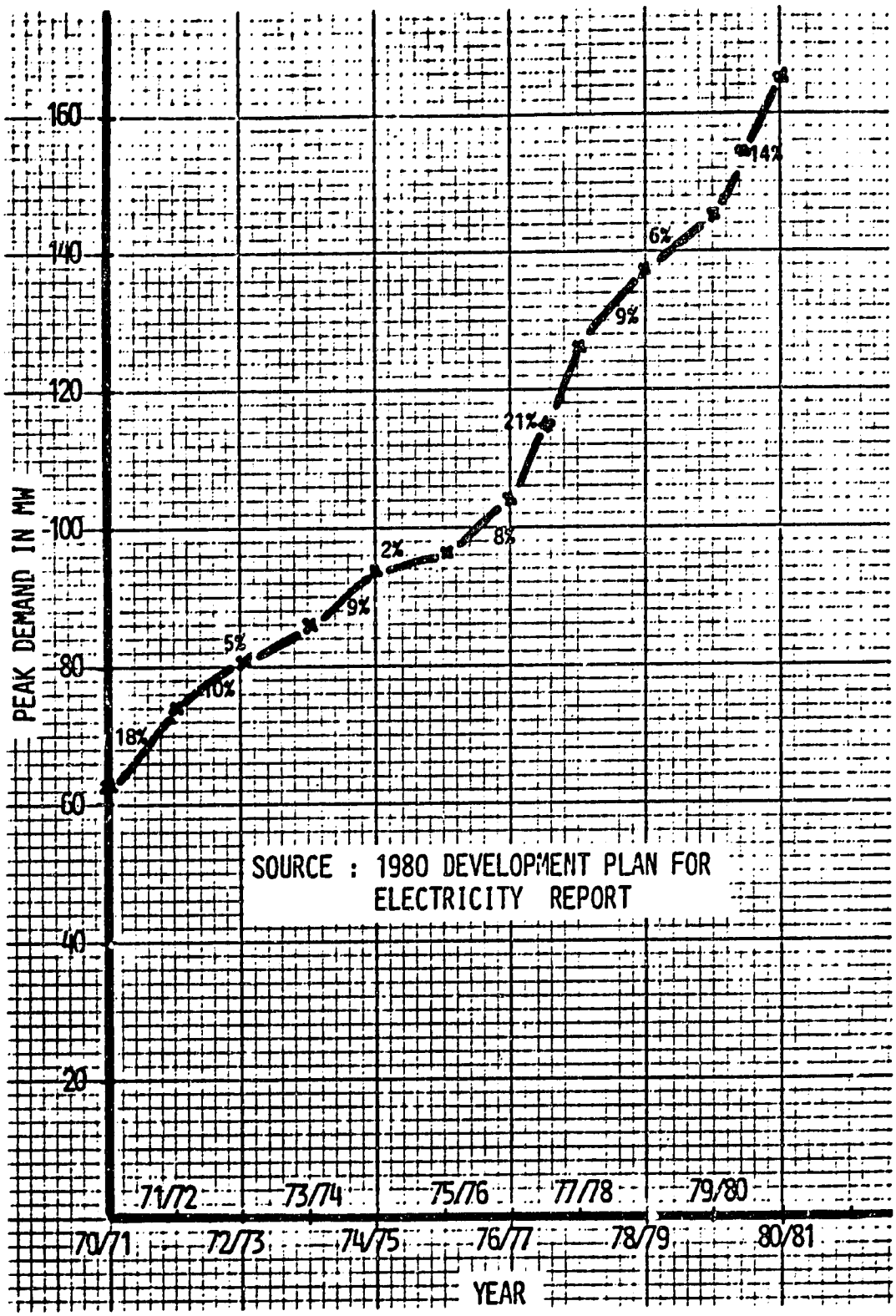

COINCIDENT GROWTH IN SUMMER PEAK LOAD
FOR THE BLUE NILE GRID SYSTEM 1970-81

FIGURE 3.2

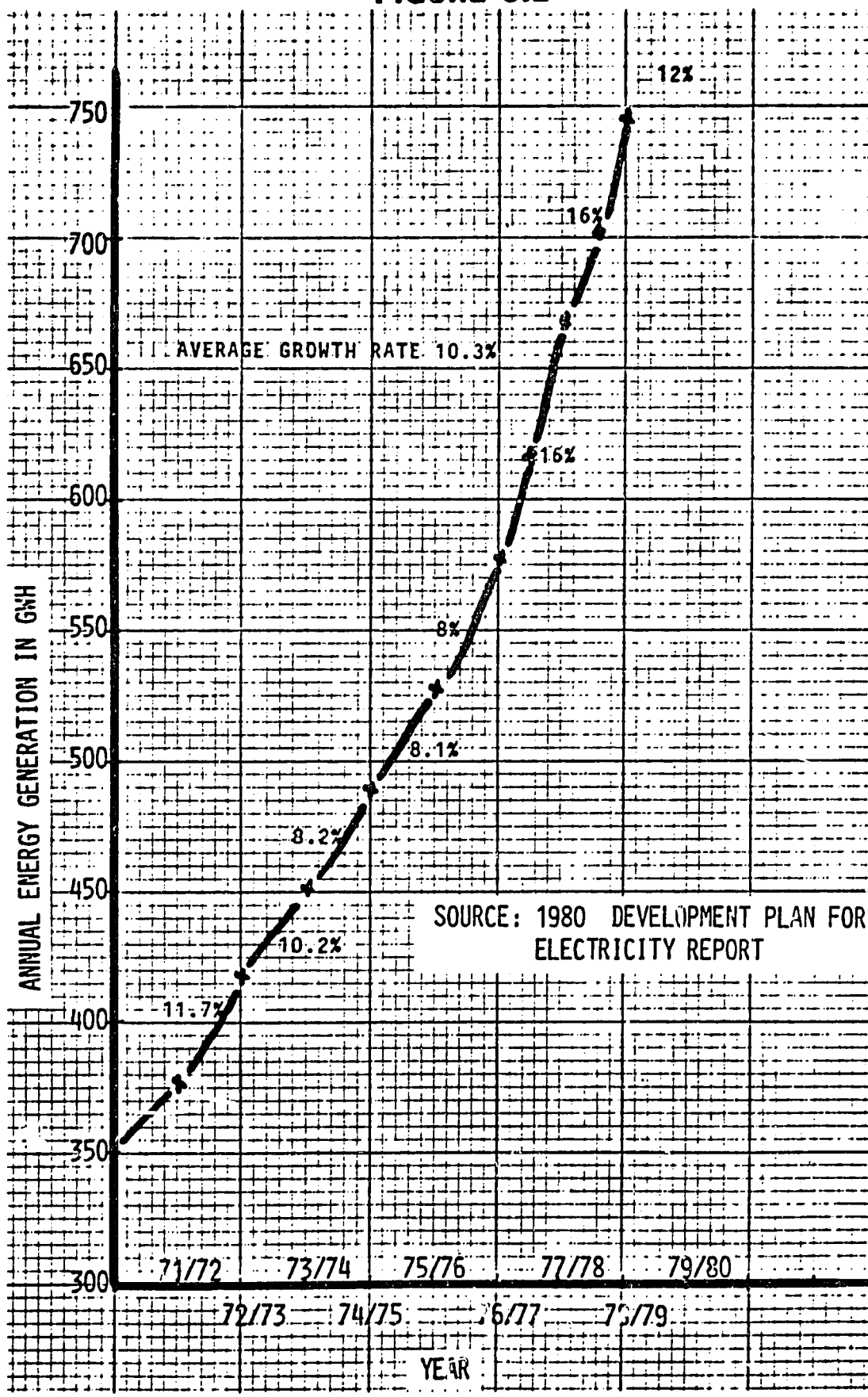

: ELECTRIC ENERGY GENERATED IN THE BLUE NILE GRID SYSTEM DURING 1971 TO 1979

The most significant influence on the growth of peak loads has been increased electrification of residential homes which affects the overall demand, and air conditioning, which affects the summer peak.

At the present time, winter and summer peaks are about the same on a regional basis. Figure 3.3 illustrates the historical seasonal peak demands. In recent years, the increased use of air conditioning has led to a factor growth in summer peak than winter peak.

Table 3.1 summarizes the total historical energy generation, sales and system loss. It should be noted that in recent years the energy loss has increased significantly. This is primarily due to the deterioration of power factors at the industrual and commercial customers' terminals. For a well planned and designed power system the normal energy loss is about 8 percent of generation.

3.2 THE BLUE NILE GRID LOAD FORECAST

The load forecast developed in the "1980 Development Plan for Electricity by the PEWC staff forms the basis for the projections up to 2000. It should be noted that the actual amount of energy generated and the peak demand in 1980/81 were slightly below the figures given in the load forecast,but there has been frequent load shedding during this period. Also, the shortage of materials, slippage of installation dates, etc., haveled to a delay in connecting new customers. Therefore, there is no firm evidence to suggest that the load forecast of "1980 Development for Elec-

FIGURE 3.3

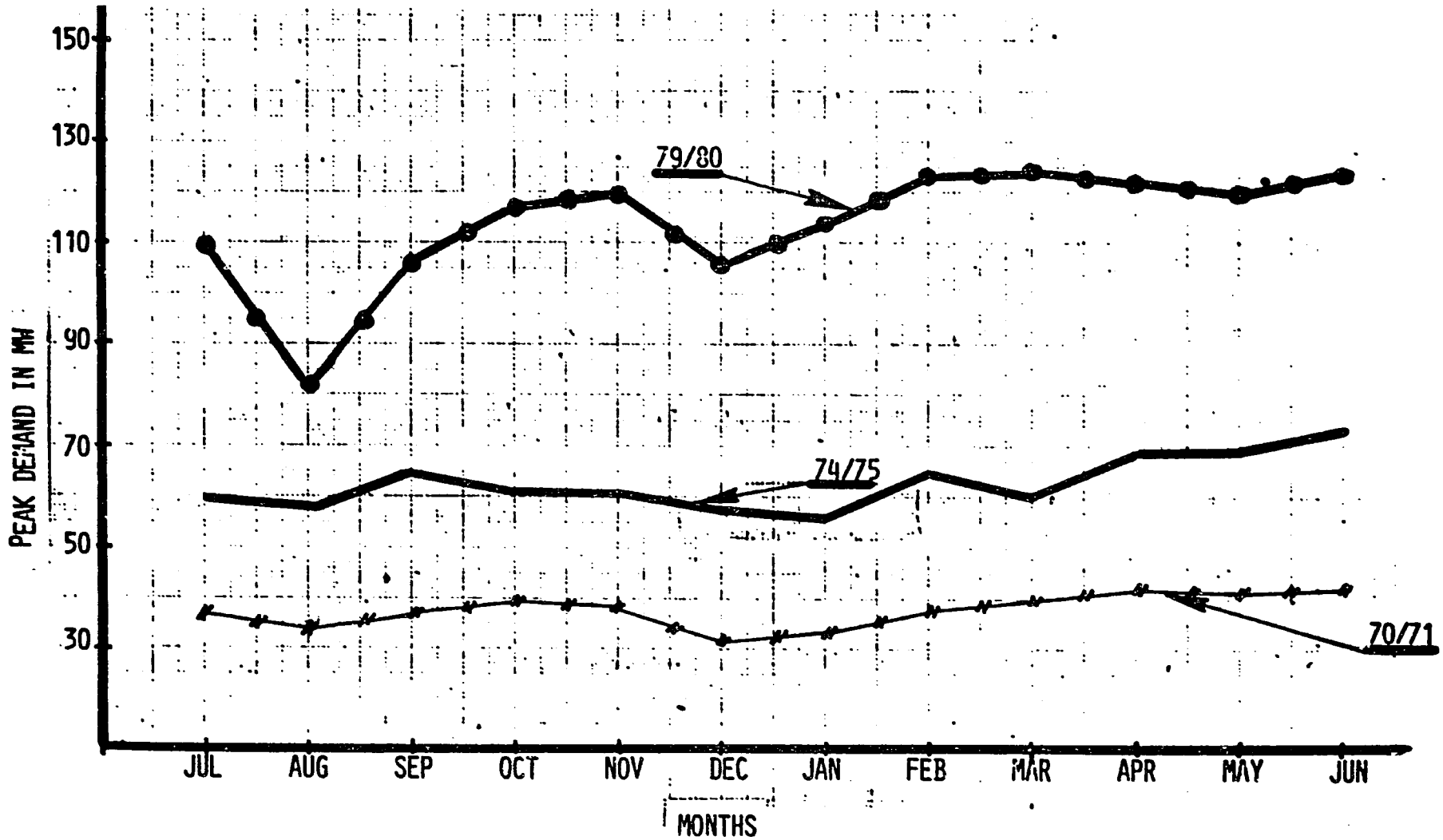

HISTORICAL SEASONAL PEAK DEMANDS
OF BLUE NILE GRID POWER SYSTEM

Table 3.1

Annual Energy Loss 1970 - 1980

Source: 1980 Development Plan for Electricity - Technical Supplement Report

	Energy (GWh)		Loss	
Year	Generated	Sales	% of Generation	% of Sales
1970/71	339	279	18	22
1971/72	379	315	17	20
1972/73	417	360	14	16
1973/74	451	375	17	20
1974/75	489	411	16	19
1975/76	528	438	17	20
1976/77	577	451	22	28
1977/78	667	521	22	28
1978/79	747	583	22	28

tricity' is an over estimate of potential demand for the short-range period.

For the long-range period, the problem of forecasting future electricity growth is partly one of projecting propulation, customers, and economic activity. This is a major source of uncertainty. Projections of economic and demographic variables, available from various governmental or consulting agencies, usually vary over a range of alternative values. Another part of the long-range forecasting problem is to project the rate at which the intensity of usage will change in the BNG service area. This too is an important source of uncertainty. The forces of conservation (efficiency standards, higher electricity prices, and use of electricity saving technologies) contend with the forces of growth (high fuel prices, higher incomes, and new electricity using technologies).

3.3.1 PEAK LOAD AND ENERGY

The peak load forecasts are the result of three independent but closely related forecasts. First, a peak forecast can be arrived at from the forecast of total system energy production through use of the load factor. Second, a peak load forecast can be calculated by using forecasts of future kWh sales by major customer classes in conjunction with class coincidental peak load factors obtained from historical cost of service studies. The third method is a direct econometric

estimation. All three of these approaches should be used to arrive at the final forecast of peak load requirements. Each approach is applied independently for the purpose of providing a system of checks on what the actual best forecast of peak load would be. First, the energy forecasts, and corresponding growth rates, for each of the four major customer classes of residential, commercial, agricultural and industrial can be used to make a determination of what would happen to the system load factor. For the BNG system, the forecast rate of growth in industrial kWh is significantly greater than the forecast rate of growth in residential kWh sales. Since industrial sales with a high load factor, the system load factor, based on total system energy production and system peak load, should increase. Further, if hydro generation continues to be an over increasing proportion of rural generation than it can be expected that, under the present rate structure, demand charges will increase relative to energy charges for those customers who have both a demand and energy charge in their rates. This effect should cause a further increase in corresponding class load-factors and ultimately result in an overall increase in system load factors. These two effects, namely higher growth rates in high load factor customer classes and increased demand charges relative to energy charges, is used subjectively to influence the determination of a peak load forecast for the BNG system.

The peak load forecasts shown on Table 3.2 are based on an average demand growth rate of 8.2 percent per year and 60 percent system load factor. However, the actual peak demand and energy sales may be lower than the projected forecasts of Table 3.2. To evaluate the sensitivity of lower growth rates, an alternative forecast is developed for the study period. Table 3.3 includes the forecasts of energy and peak demand for a growth rate of 6 percent per year in the 1980s and 1990s. The implicit assumption for this lower growth rate is that both price and nonprice motivated conservation should play roles in restraining the growth of intensity.

Figure 3.4 and 3.5 illustrates separately the forecasted peak demand and energy sales for the BNG service area. If the minimum of 6 percent occurs, then the expected peak demand in the BNG system will be 292 MW, 392 MW, 524 MW, and 662 MW for the years 1985/86, 1990/91, 1995/96, and 1999/2000 respectively. However, if the anticipated growth of 8.2 percent per year occurs, then the peak demand in the BNG area will be 329 MW, 489 MW, 725 MW, and 994 MW for the years 1985/86, 1990/91, 1995/96, and 1999/2000 respectively. It should be noted that due to high economic and industrial growths in the Khartoum area, the actual average peak demand may be higher than 8.2 percent per year.

Table 3.2

BLUE NILE GRID

Annual Energy and Peak Demand Forecasts

(Source: 1980 Development Plan for Electricity, Technical Supplement Report)

Year	Energy Generation* (GWh)	Peak Demand (MW)
1981/82	1211	231
1982/83	1376	262
1983/84	1477	281
1984/85	1600	304
1985/86	1732	329
1986/87	1875	356
1987/88	2029	386
1988/89	2196	418
1989/90	2377	452
1990/91	2570	489
1991/92	2780	529
1992/93	3006	572
1993/94	3253	619
1994/95	3521	670
1995/96	3810	725
1996/97	4120	784
1997/98	4462	849
1998/99	4825	918
1999/2000	5224	994

* o System energy loss is approximately 14 percent of total energy demand.

o System load factor is assumed to remain constant at 60 percent.

o Peak demand growth rate os 8.2 percent.

Table 3.3

BLUE NILE GRID

Annual Energy and Peak Demand Forecasts

Note: Six percent demand growth rate for the study period.

Year	Energy Generation* (GWh)	Peak Demand (MW)
1981/82	1211	231
1982/83	1288	245
1983/84	1366	260
1984/85	1451	276
1985/86	1535	292
1986/87	1629	310
1987/88	1728	329
1988/89	1834	349
1989/90	1945	370
1990/91	2060	492
1991/92	2191	415
1992/93	2313	440
1993/94	2454	467
1994/95	2602	495
1995/96	2754	524
1996/97	2922	556
1997/98	3096	589
1998/99	3280	624
1999/2000	3479	662

* o System energy loss is approximately 14 percent of total energy demand.

o System load factor is assumed to remain constant at 60 percent.

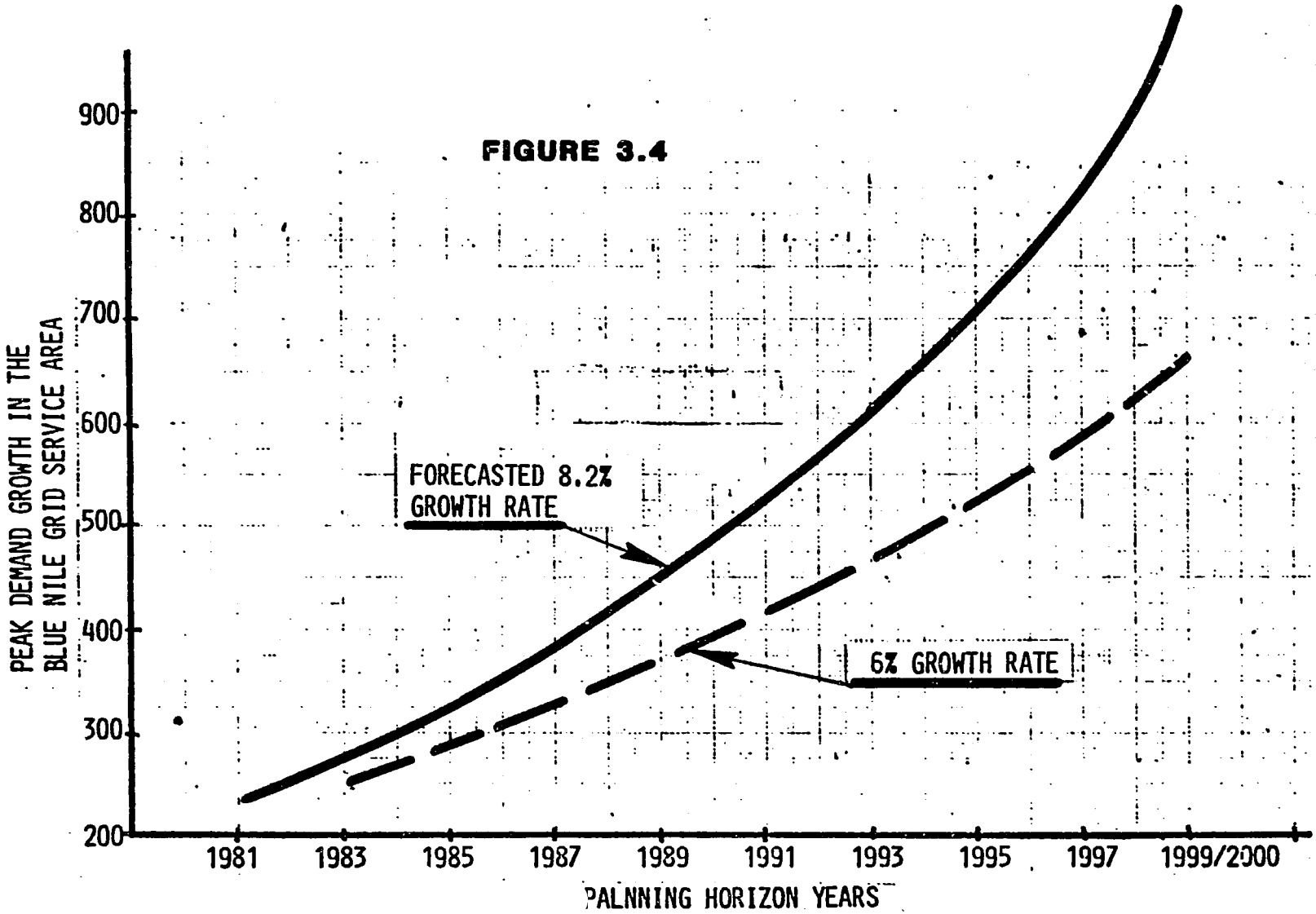

.EAK DEMAND FORECASTS FOR THE BLUE NILE GRID SYSTEM GRID SYSTEM

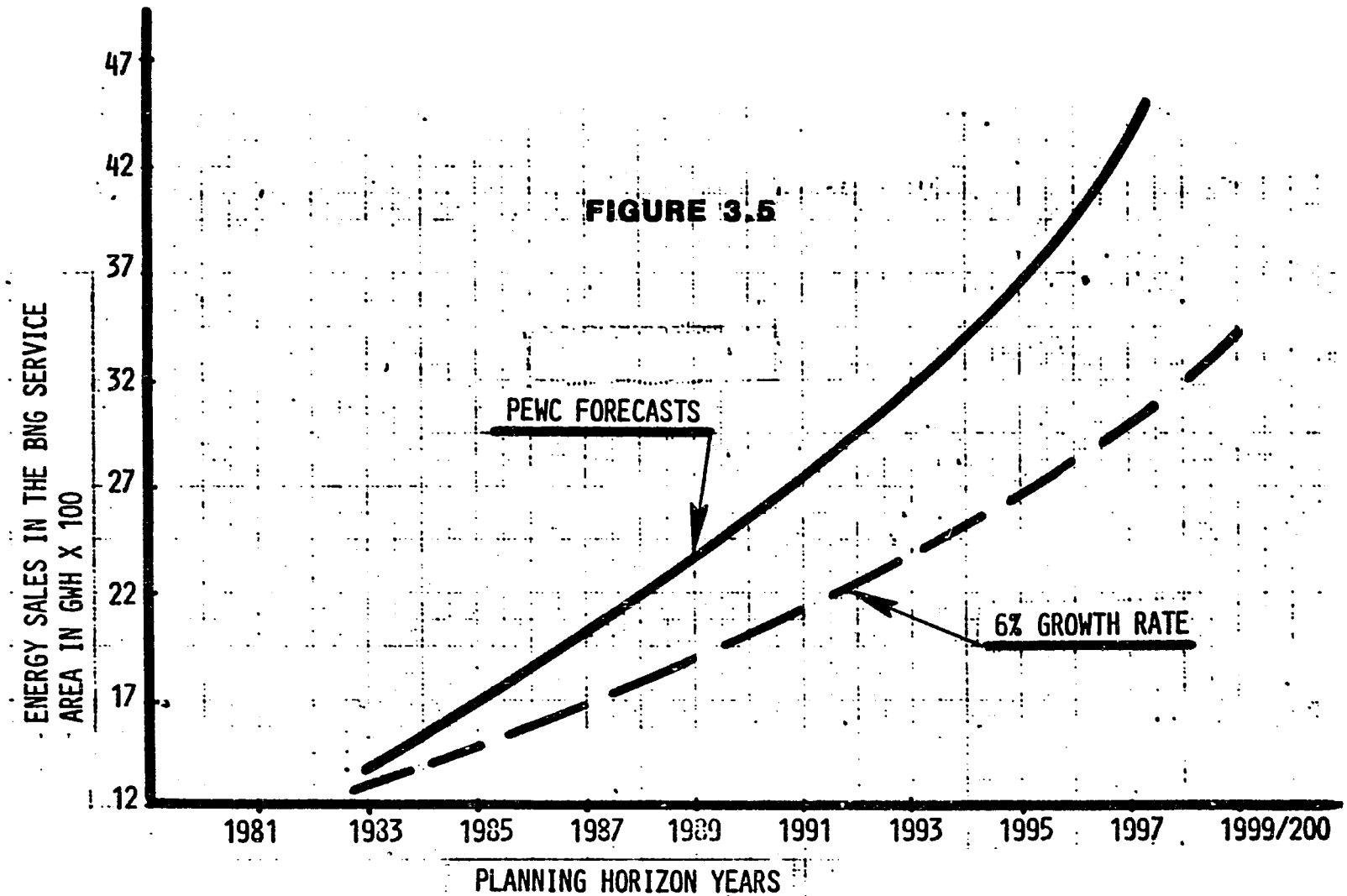

ENERGY DEMAND FORECASTS FOR THE BLUE NILE GRID SYSTEM

3.3 DEMAND FORECASTS FOR DISPERSED AREAS

The long-range demand forecast for the remaining systems between 1981/82 and 1999/2000 are examined in this section. Figure 3.6 illustrates the different service area dispersed load centers other than Blue Nile Grid system and the boundary of provinces in Sudan. From 1981/82, onwards consumption has been projected to increase at average annual growth rate of 7 percent for these towns in which there is a relatively large load. In many towns in the southern region, the growth rate is 20 percent per year and is expected to continue up to the year 1990.

The main source of data for the long-range demand forecast for different provinces in Sudan other than the Blue Nile Grid System is the "Long-Term Power Development (1985-2000) Report" by Sir Alexander Gibbs and Partners, published in September, 1979. The demand forecasts for the years 1989/90 and 1999/2000 are taken directly from the "Long-Term Power Development (1985-2000) Report." The demand forecasts for the years 1984/85 and 1994/95 are developed from the PEWC "1980 Development Plan for Electricity" Report.

The annual load forecasts have been determined according to the composition of the load, and where there is no industrial load, a figure of 45 percent system load factor is assumed. Figures 3.7, 3.8, 3.9, amd 3.10 illustrate the peak and energy demands in different provinces for the years 1984/85, 1989/90, 1994/95 and 1999/2000. From

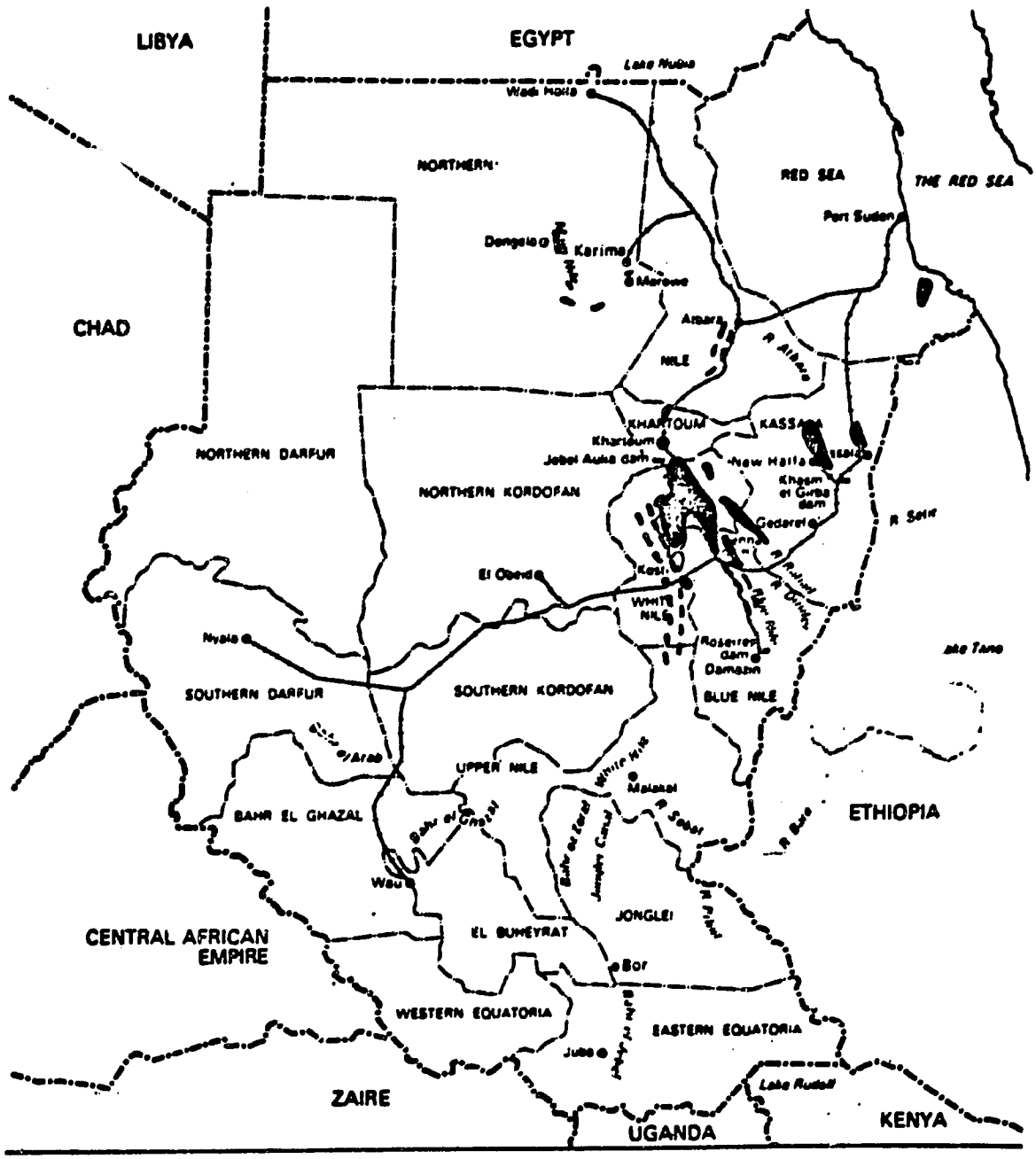

FIGURE 3.6

DISPERSED LOAD CENTERS AND PROVINCE BOUNDARIES

Figures 3.7 and 3.10, it should be noted that in the Eastern Grid System (Red Sea and Kassaka areas) the peak demand will grow from 45 MW in 1984/85 to about 217 MW by the year 2000.

Table 3.4 summarizes the peak and energy demands for different provinces for the study period.

Table 3.4

Total Peak and Energy Demands

for Dispersed Load Centers

Year	Non-Coincident Peak Demand (MW)	Total Energy Demand (GWh)
1984/85	99.5	483
1989/90	225	964
1994/95	375.5	1,629
1999/2000	533	2,297

3.4 SUMMARY OF DEMAND PROJECTIONS

The long-range demand projections for the BNG and other systems are summarized in Table 3.5. At present, the per capita electric energy consumption in Sudan is about 50 kWh. The total national electric energy production by the end of year 2000 is about 7 521 GWh. Assuming a population of 30 million by the end of this century gives 250 kWh per capita electric energy consumption. This figure

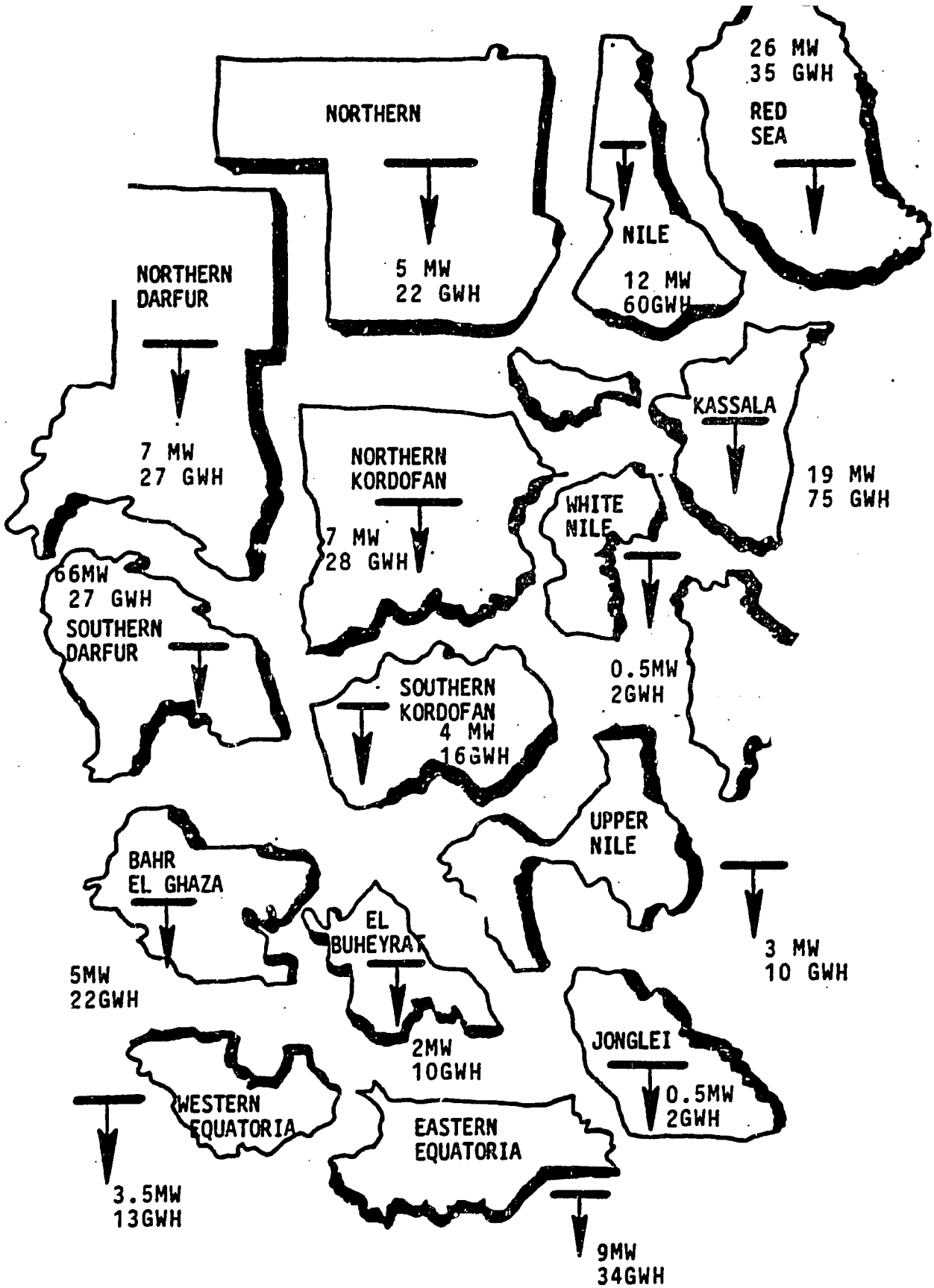

FIGURE 3.7

PEAK AND ENERGY DEMANDS IN DIFFERENT PROVINCES FOR THE YEAR 1984/85

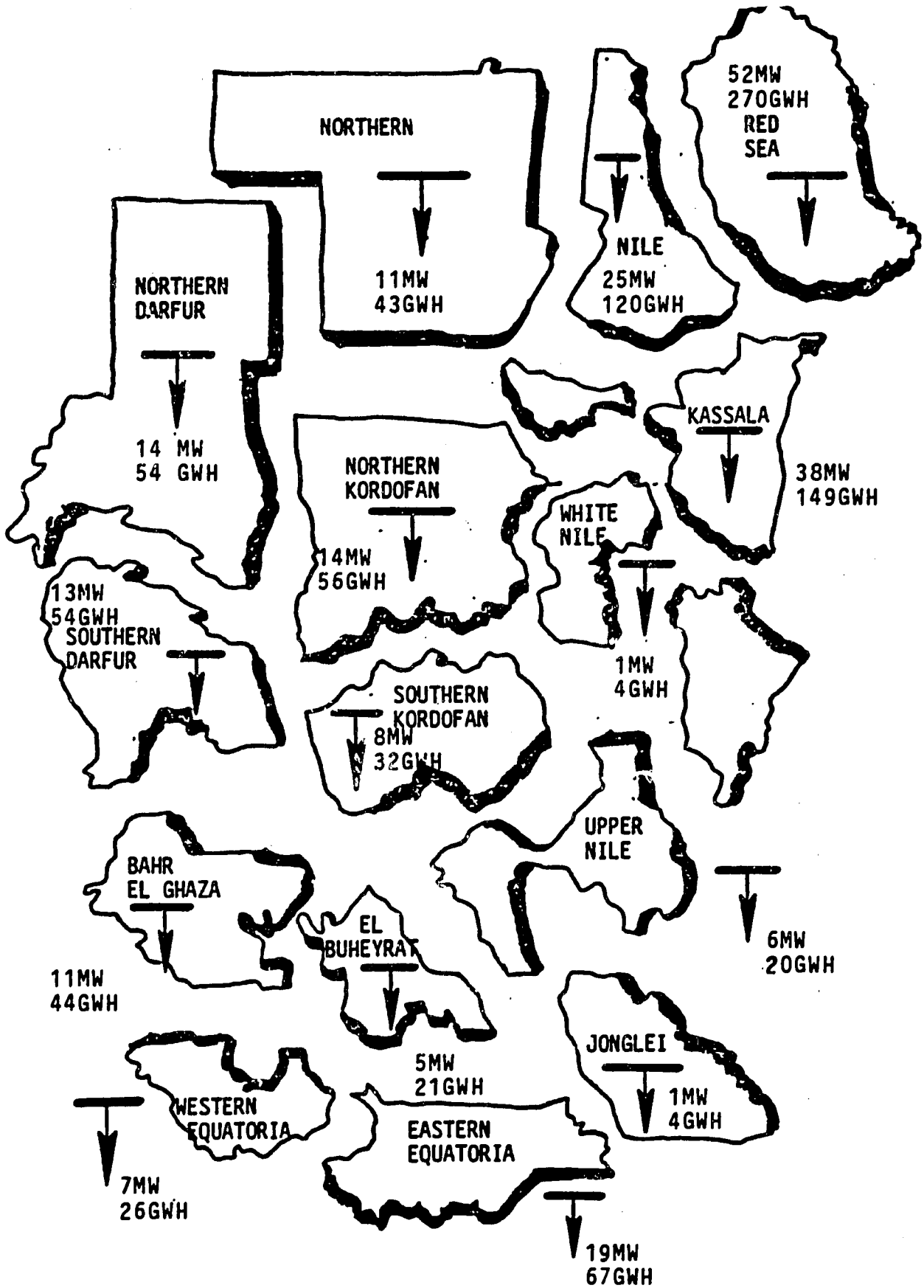

FIGURE 3.8

PEAK AND ENERGY DEMANDS IN DIFFERENT PROVINCES FOR THE YEAR 1989/90

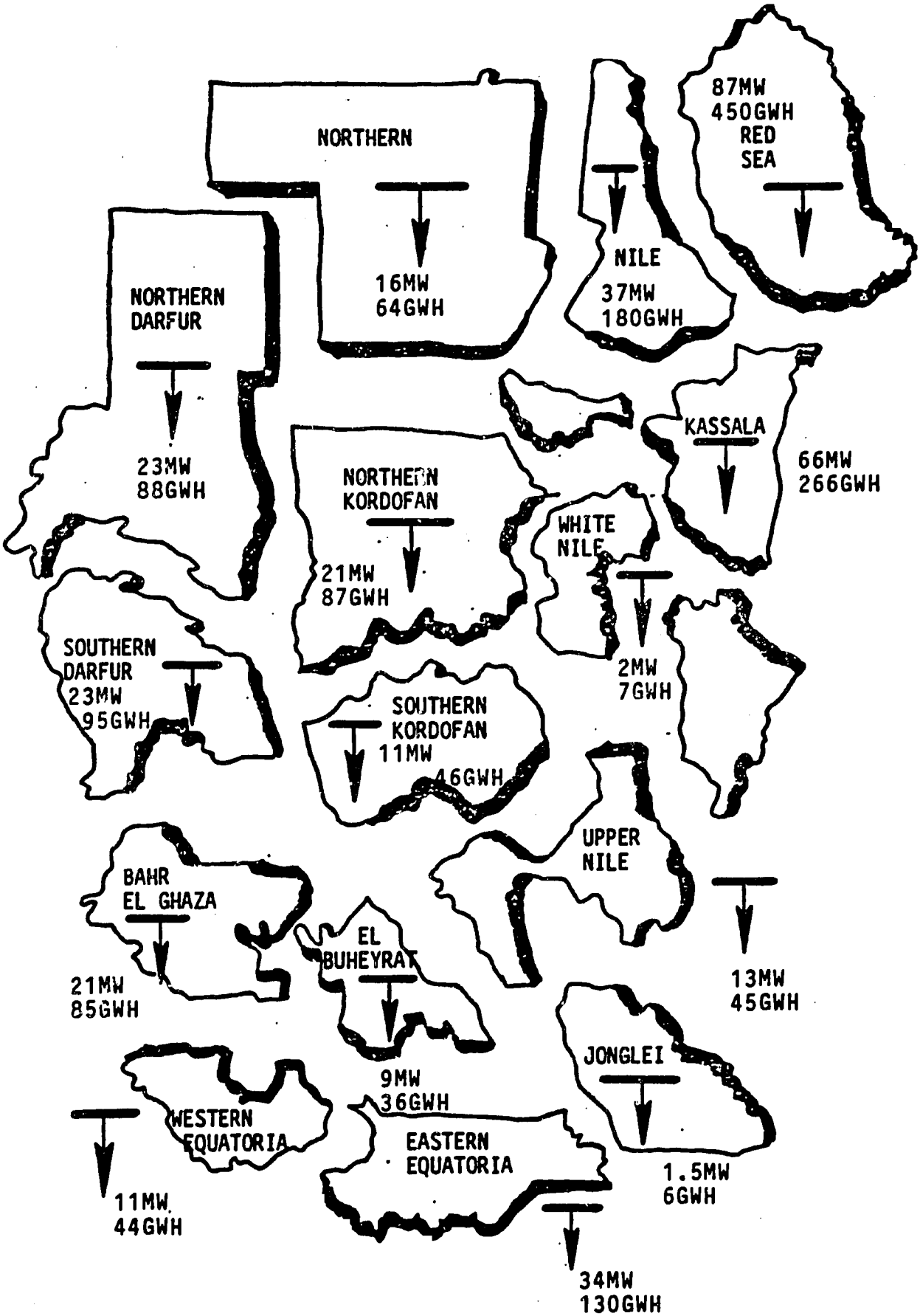

FIGURE 3.9

PEAK AND ENERGY DEMANDS IN DIFFERENT
PROVINCES FOR THE YEAR 1994/95

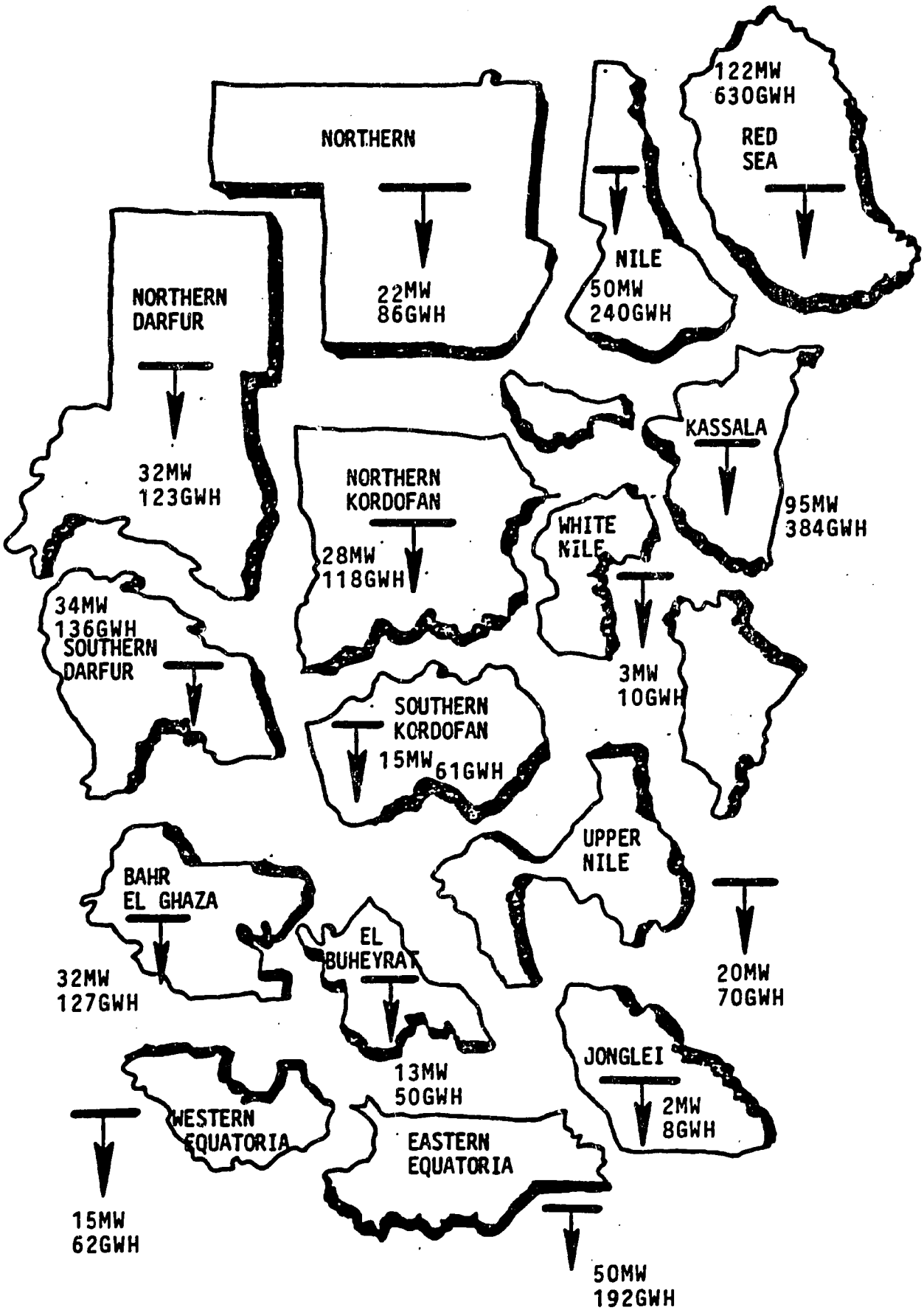

FIGURE 3.10

PEAK AND ENERGY DEMANDS IN DIFFERENT PROVINCES FOR THE YEAR 1999/2000

Table 3.5

Summary of Long-Range
Peak Demand and Energy Projections

Service Area	1981/82		1984/85		1989/90		1994/95		1999/2000	
	MW	GWh	MW	GWh	MW	GWh	MW	GWh	MW	GWh
1. Blue Nile Grid	231	1211	304	1600	452	2377	670	3521	994	5224
2. Red Sea Area	24	127	26	135	52	270	87	45J	122	630
3. Eastern Grid (Kassala Area)	17	66	19	75	38	149	66	266	95	384
4. Northern Area (Northern, Nile, N. Darfur, N. Kordofan	22	104	31	137	64	273	97	419	132	567
5. Southern Region (S. Darfur, S. Kordorfan, N. Nile, U. Nile, Jonglei, E. Equatoria)	7	25	23	91	62	181	85	329	123	
6. Western Provinces (Bahr El Ghazal, El Buheyrat, N. Equatoria)	2	6	11	45	22	91	41	165	60	239
TOTAL	303	1539	414	2083	690	3341	1046	5150	1527	7521

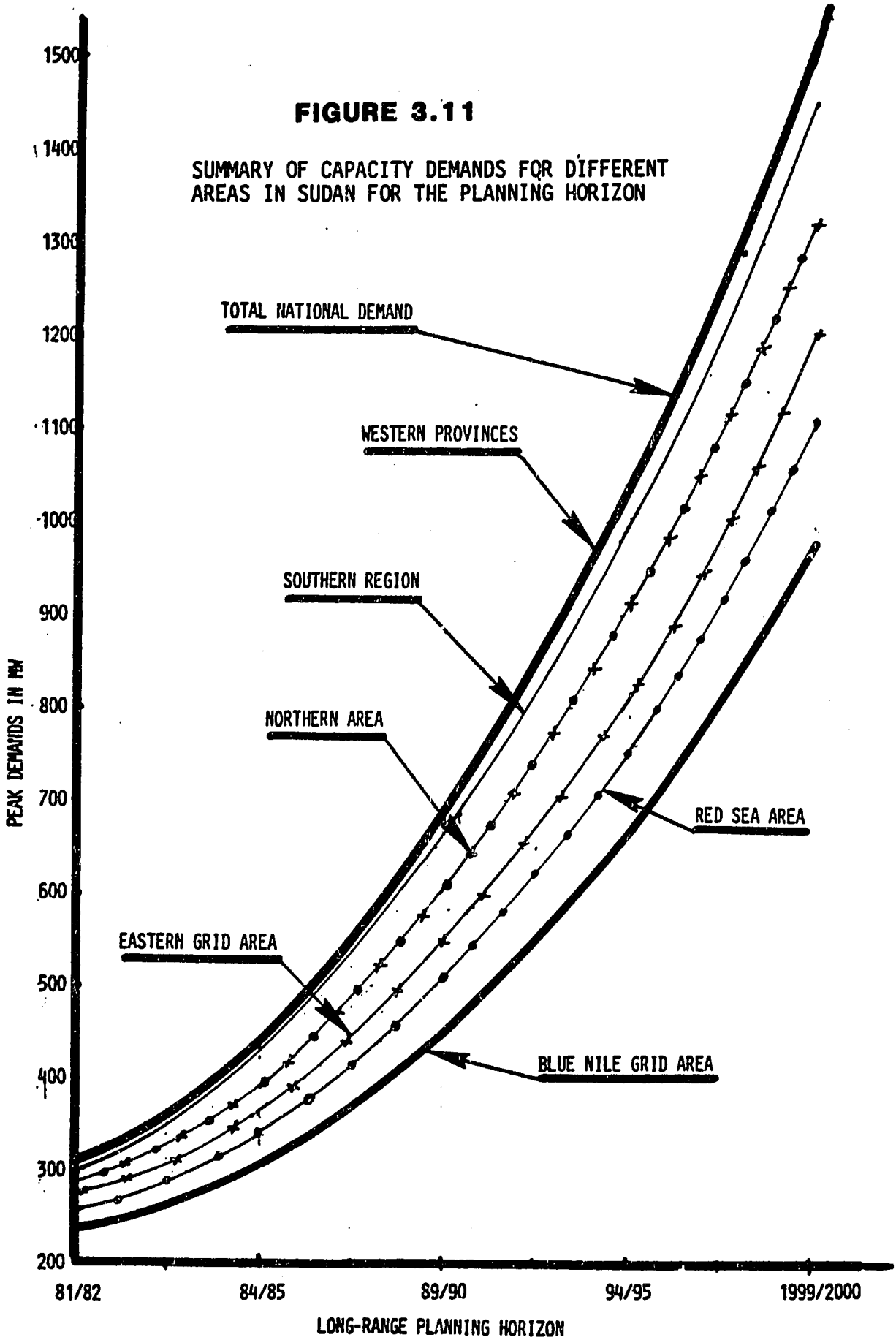

FIGURE 3.11

SUMMARY OF CAPACITY DEMANDS FOR DIFFERENT AREAS IN SUDAN FOR THE PLANNING HORIZON

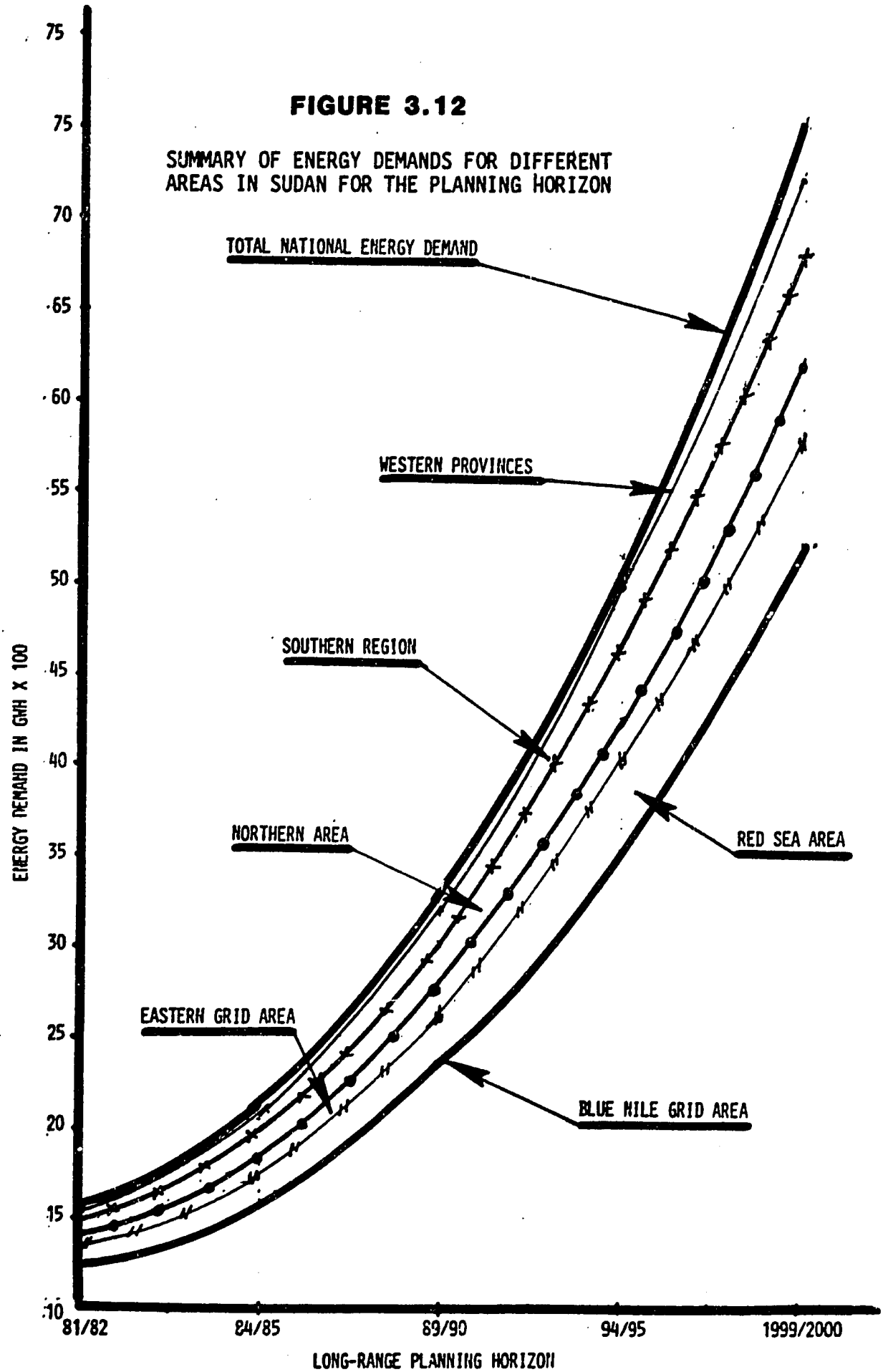

FIGURE 3.12

SUMMARY OF ENERGY DEMANDS FOR DIFFERENT AREAS IN SUDAN FOR THE PLANNING HORIZON

does not seem unrealistic when compared with the present per capita energy consumption of other neighboring countries. Of course, this development depends on several other factors, especially on the national and regional economic growths.

Figures 3.11 and 3.12 illustrate the total non-coincident peak demand and the electric energy production in Sudan for the study period. It is interesting to note that at the end of this century, the BNG service area will serve approximately 70 percent of the total electric energy in Sudan. At present, the BNG systems serves about 90 percent of total electric energy consumption in Sudan.

Chapter 4: Long-Range Capacity Expansion Plans

At PEWC, as at all utilities, planning for additional generating capacity begins with forecasts of load. To these forecasts are matched projected generation from existing plants (less scheduled retirements) and the new capacity already under construction. A tentative program of further additions is then adjusted to provide desired levels of generating reserve margin. These are reserve margins which must make up for unplanned ("forced") outages of generating equipment, must handle any increase in load over and above the forecasts, and as has often been the case during the past several years - must provide a cushion for scheduled slippages in the construction of new plants.

System load grows relatively smoothly from year to year. On the other hand, generating plants are fairly large in comparison to the system load and are added in discrete units; hence, anticipated generating reserves in any given year may be somewhat above or below desired amounts.

The PEWC system has sixteen independent electricity supply systems which supplied about 680 GWh of energy to about 182,000 customers in 1978/79 with a historical maximum demand of about 165 MW. The total 1981 installed capacity of the PEWC system is 280 MW. The Blue Nile Grid (BNG) system produces about 90 percent of the PEWC's total energy and supplies 125,000 customers from Damazine near the border with Ethiopia to Khartoum. The peak demand in the BNG system in 1978/79 was 137 MW.

Previous Page Blank

4.1 POWER III AND POWER IV GENERATION EXPANSION PLAN

The operating reliability of the BNG system will be significantly improved when the new generating facilities of the so called Power III and IV projects are completed. The generation expansion programs for the BNG system are summarized in Table 4.1. When all projects Power III and Power IV programs are completed by 1985/86, the BNG system capacity will be increased in the following ways:

a. 120 MW hydro capacity (Roseires #5, #6, #7)

b. 120 MW thermal (steam) capacity

c. 60 MW of diesel capacity

However, from Table 4.1, it should be noted that during the short-range period, the BNG system is adding 60 percent thermal capacity and 40 percent hydro capacity. At the end of the Power III and IV expansion programs, the BNG system will be approximately 54 percent thermal and 46 percent hydro.

4.2 LONG-RANGE HYDRO-ELECTRIC GENERATION EXPANSION PROGRAM

According to Nile Waters Study Reports, current plans for PEWC hydro capacity additions call for a total of 958 MW of hydro electric generation by the end of this century. The major hydro-electric projects as recommended in the Nile Waters Study Reports

Table 4.1

Generation Capacity Expansion
Program for the BNG System

	Generation Capacity Expansion by Fuel Type (MW)				
	Hydro	Steam	GT	Diesel	Total MW
1981*	145	70	15	40	270*
		POWER III PROJECTS			
1982	--	--	--	1-10	280
1983	1-40 (Roseires #5)	2-30 = 60 (Khartoum N.)	--	3-10 = 30 (Burri)	410
1984	1-40 MW (Roseires #6)	--	--	--	450
		POWER IV PROJECTS			
1985		2-30 = 60 (Khartoum N or Kosti)		--	510
1986	1-40 (Roseires #7)	--	--	2-10 = 20 (Burri)	570
TOTAL	265	190	15	100	570
1982-86 %	46.5%	33.4%	2.6%	17.5%	100%

& Maximum output of the existing system is only 209 MW even though the installed capacity is 270 MW.

are summarized in Table 4.2. The existing hydro capacity generation (1981) is only 158 MW. The Roseires power station was designed for seven sets. The first three sets,each of 30 MW, were installed in 1971. The fifth and sixth sets, both of 40 MW size, are scheduled to be installed before 1985.

It should be noted from Table 4.2 that the only major hydro electric expansion program that has been recommended before the year 2000 in the Nile Water Study Report is Merowe hydro electric project (1996/97). The Master Plan Projects for the hydro resource development in Sudan is reproduced from the Nile Water Study Report and is summarized in Figure 4.1. The major emphasis for the hydro resource development in Sudan is the irrigation schemes rather than hydro electric generation. Even though the hydro electric generation potentials in the Main Nile Systems is over 3,000 MW, by the year 2000 less than 1,000 MW will be developed. As a matter of fact, if Merowe project is delayed, only 358 MW hydro capacity will be available in the BNG system.

According to a Nile Waters Study Report, "On the Main Nile, the best sites for hydro-electric projects are located at the sixth, fifth, and fourth cataracts (at Sabolka, Shereik and Merowe respectively) and at the Dal Cataract. The fourth cataract could be developed in two stages, with a low dam at Merowe and a second dam 90 km upstream at Shirril or by a single high dam at Merowe. For all of these projects preliminary designs were developed, reservoir operation studies carried out and cost estimates prepared to permit an economic comparison to be made. As there is no requirement on the Main Nile for storage for

Table 4.2

Hydro-Electric Projects as Proposed
in the Nile Waters Study

(Source: Reports by Sir Alexander Gibb and Partners)

Power Development Projects	Existing Capacity (MW) 1980/81	CAPACITY EXPANSION (MW) 1980/85	1985/90	1990/95	1995/2000	Total 2000
Blue Nile						
a. Roseires	130	80 #5 & #6	40 #7			250
b. Sennar	15	--	30			45
Upstream Malakal						
a. Khasm El Girba Dam	13	--	--	--	--	13
b. Rumela Dam	--	--	30	--	--	30
Main Nile						
a. Low Merowe	--	--	--	--	600 (1996/97)	600
TOTAL	158	90	110		600	958

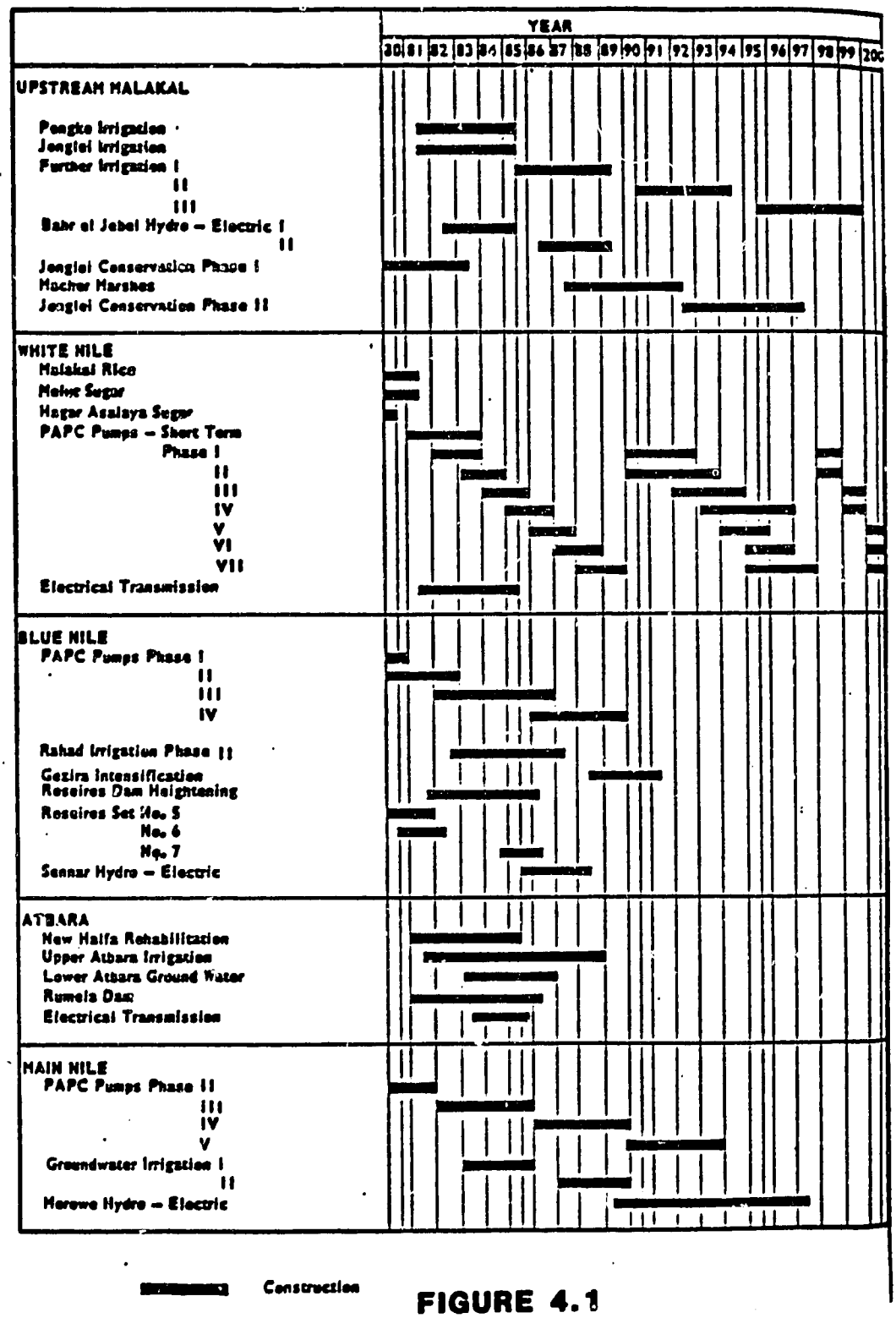

FIGURE 4.1

SUMMARY OF MASTER PLAN PROJECTS
OF NILE WATERS STUDY

irrigation purposes, these projects must be justified on power aspects alone".

A summary of the characteristics of the potential hydro electric projects is included in Table 4.3. Figure 4.2 illustrates the potential sites for major hydro electric projects in Sudan.

Table 4.3

Potential Hydro Electric Projects

	Max. height of dam (m)	Installed capacity (MW)	Average energy (GWh/a)
Sabaloka	40	120	750
Shereik	28	240	1 400
Shirri Island	52	450	2 600
Low Merowe	60	600	3 600
High Merowe	73	750	4 800
Dal	74	600	3 500
TOTAL		2,760	16,650

This report continues, "Potential exists for development of hydro power upstream of Malakal, but lack of local demand for large amounts of power, and distance from major load centers in the Sudan, are limiting factors. However, small schemes could provide power for local use, and minor projects on the Bahr el Jebel with a nominal capacity of 20 MW have been tentatively identified for this purpose.

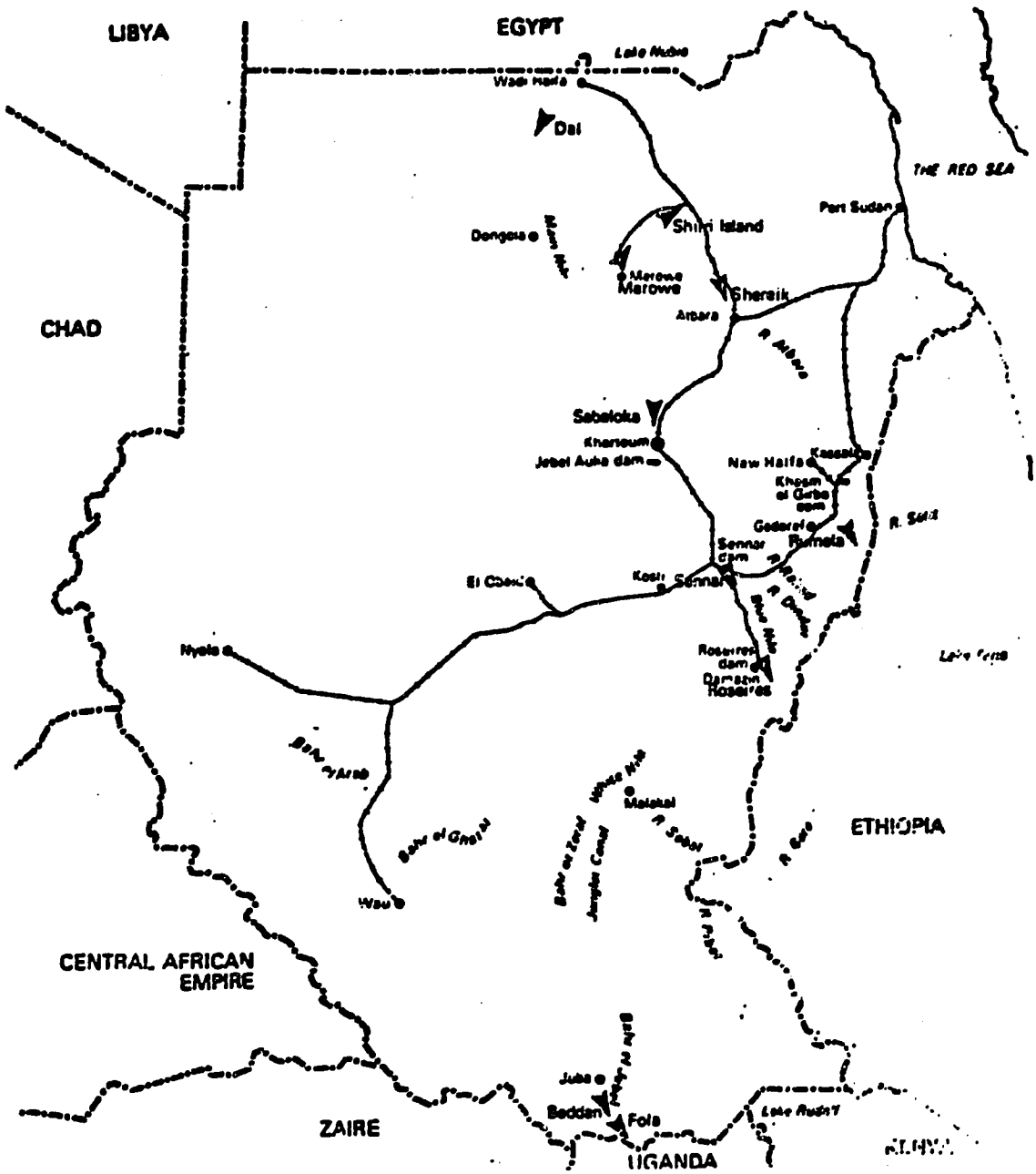

FIGURE 4.2

POTENTIAL MAJOR HYDRO-ELECTRIC SITES IN SUDAN

In view of the size of potential projects on the Mail Nile, it is concluded that, following the installation of additional capacity at Roseires and Sennar, there would be scope for only one major new project before the end of the century. From a preliminary economic comparison of the alternatives a two stage development for the sourth cataract is recommended for the Low Merowe project has been selected as the priority scheme for inclusion in alternative development programs. If, howeber, there were a delay in the heightening of Roseires, Sabaloka could be considered as an option for providing hydro electricity, but it would only be economically attractive if there were a significant rise in the price of fuel in real terms."**

**Source: Nile Waters Study Reports.

4.3 DISPERSED GENERATION EXPANSION PROGRAM

To supply the electricity in the remote load centers, the " 1980 Development Plan for Electricity Report" has identified over 18 dispersed generation plants for 45 towns in different provinces for the study period (1982-2000). Table 4.4 lists all dispersed generation centers in Sudan and the expected peak demands. It should be noted that the total peak demand for the remote areas is over 50.2 MW and the planned total capacity expansion is about 40 MW. Some of the towns which will be supplied from the existing facilities or by transmission interconnection are denoted by "T" in Table 4.4

Table 4.4

PEWC Electricity Expansion Programs
in Towns Remote from the BNG System

(Source: 1980 Development Plan for Electricity)

Year	Province	Town	Demand Forecast in MW	Generation Capacity in MW		Fuel Type
1981/83	El Buheyrat	Rumbek	1.4	3 x 1	= 3.0	Diesel
1982/83	S. Kororan	Kadugli	0.6	3 x 0.5	= 1.5	Diesel
1983/84	Northern	Karima/Merowe	1.0	3 x 1	= 3.0	Diesel
1983/84	E. Equatoria	Anzara	1.9	4 x 1	= 4.0	Diesel
1984/85	Jonglei	Bor	0.2	2 x 0.25	= 0.5	Diesel
1984/85	N. Darfur	Geneina	2.8	4 x 1	= 4.0	Diesel
1984/85	N. Kordorfam	El Rahad	0.6	T		--
1985/86	Bahr El Ghazal	Aweil	1.8	T		--
1985/85	El Buheyrat	Yirol	1.4	3 x 1	= 3.0	Diesel
1986/87	E. Equatoria	Torit	1.3	T		
1986/87	S. Darfur	Ed Daein	1.7	T		
1987/88	E. Equatoria	Yei	1.3	T		
1987/88	N. Kordofan	El Nahud	1.7	T		
1988/89	Northern	Wadi Halfa	3.0	4 x 1	- 4.0	Diesel
1988/89	S. Kordofan	Abu Zabad	0.4	T		--
1989/90	W. Equatoria	Maridi	1.2	T		--
1989/90	S. Kordofan	Dilling	1.2	T		--

Table 4.4 (Con't.)

Year	Province	Town	Demand Forecast in MW	Generation Capacity in MW	Fuel Type
1990/91	S. Darfur	Zalingei	1.4	T	--
1990/91	Nhite Nile	Tendelti	1.3	T	--
1990/91	W. Equatoria	Tambura	1.4	3 x 1 = 3	Diesel
1991/92	El Ghazal	Raga	1.5	3 x 1 = 3	Diesel
1991/92	Red Sea	Tokar	1.8	T	--
1991/92	El Buheyrat	Tonj	1.2	T	--
1992/93	Red Sea	Sinkat and Gebiet	1.4	T	--
1992/93	Kassaka	El Hawata	0.9	T	--
1992/93	E. Equatoria	Kapoeta	0.9	4 x 0.5 = 2.0	Diesel
1993/94	Kassala	Aroma	0.9	T	--
1993/94	Jongolei	Akobo	0.6	4 x 0.25 = 1.0	Diesel
1994/95	Upper Nile	Renk	0.6	4 x 0.25 = 1.0	Diesel
1994/95	S. Kordofan	El Fula	0.5	T	--
1994/95	S. Kordofan	Babanusa	1.4	T	--
1995/96	S. Kordofan	Abu Guheiha	0.8	3 x 0.5 = 1.5	Diesel
1995/96	Kassala	Doka	0.7	T	--
1995/96	N. Darfur	Kutum	0.7	3 x 0.5 = 1.5	Diesel
1996/97	N. Kordofan	Bara	0.9	T	--
1996/97	Kassala	Qala Em Nahl	0.6	T	--
1997/98	Blue Nile	Kurmuk	0.9	3 x 0.5 = 1.5	Diesel
1997/98	Nile	El Bauga	0.8	T	--
1997/98	S. Kordofan	Mugiad	0.9	T	--

Table 4.4 (Con't.)

Year	Province	Town	Demand Forecast in MW	Generation Capacity in MW	Fuel Type
1998/99	S. Kordofan	Talodi	0.9	T	--
1998/99	Nile	El Bauga	0.8	T	--
1998/99	S. Kordofan	El Abbasiya	0.70	T	--
1999/2000	S. Kordofan	Rashad	0.5	4 x 0.25 = 1.0	Diesel
			50.2 MW	40.0 MW	

Note: 'T' denotes where electricity supply is delivered from an existing system by a reansmission interconnection.

Table 4.5

Summary of Dispersed Diesel
Oil New Generation During
the Study Period 1982 - 2000

By Year	Diesel Generation Capacity in MW
1984/85	16.0
1989/90	23.0
1994/95	33.0
1999/2000	40.0

Note: Total demand for the dispersed load is approximately 50.2 MW (see Table 4.4).

The summary of total diesel generation for the dispersed load is given in Table 4.5.

4.4 MAINTENANCE AND RETIREMENT SCHEDULES

Studies are necessary to determine major equipment problem areas and to evaluate the potential for improving reliability and extending service life by improved technology. In the PEWC system, a large share of the nonhydro installed capacity consists of aging equipment whose normal lifetime is near an end. For example, Burri's steam plant, still the nation's largest single nonhydro facility, is over 25 years old and beset with mechanical problems. Most diesel powered plants in the system are somwhat newer but are also beginning to suffer from frequent breakdowns due to lack of preventive maintenance programs.

For the nonhydro units, preventive maintenance should be a very important aspect of PEWC's overall maintenance program. Through the years, PEWC's maintenance practices have reduced in response to the growth of the load and shortage of generating capacity. It must be noted that, although preventive maintenance continues to be emphasized to improve forced outage performance during the peak periods, there are counter activities beyond PEWC's control that are expected to aversely affect forced outage performance. For example, shrinking operating margins have limited the flexibility of removing units from service to perform perventive maintenance.

For the long-range planning study at least 10 percent of the non-hydro capacity is assumed on scheduled maintenance outage. For the hydro generating capacity, the scheduled and preventive maintenance requirements are usually lower than the thermal units. Three percent of the hydro capacity is assumed to be on scheduled maintenance outage at the time of system peak.

4.4.1 RETIREMENT SCHEDULE

The PEWC's "1980 Development Plan Report" did not include any retirement schedule for non hydro units during the 1980s or 1990s. In this section, a planned retirement schedule is developed for the non hydro generating units during 1982 to 2000. The criterion used for the retirement schedule is primarily based on the age of the generating units and the unavailability of the spare parts. Usually, thermal units over 25 years of age are considered to be in the "wear-out period" when the maintenance and forced outages are frequent. Figure 4.3 illustrates the typical life-cycle of small thermal generating units. The criterion used for the PEWC's retirement schedule is based on 30 years of age.

Table 4.6 includes all the non-hydro generating units which should be retired from the system by the end of the year 2000. Table 4.7 summarizes the total capacity reduction for the years 1985, 1990, 1995 and 2000. It should be noted that a total of 100 MW non-hydro capacity should be retired during the study period.

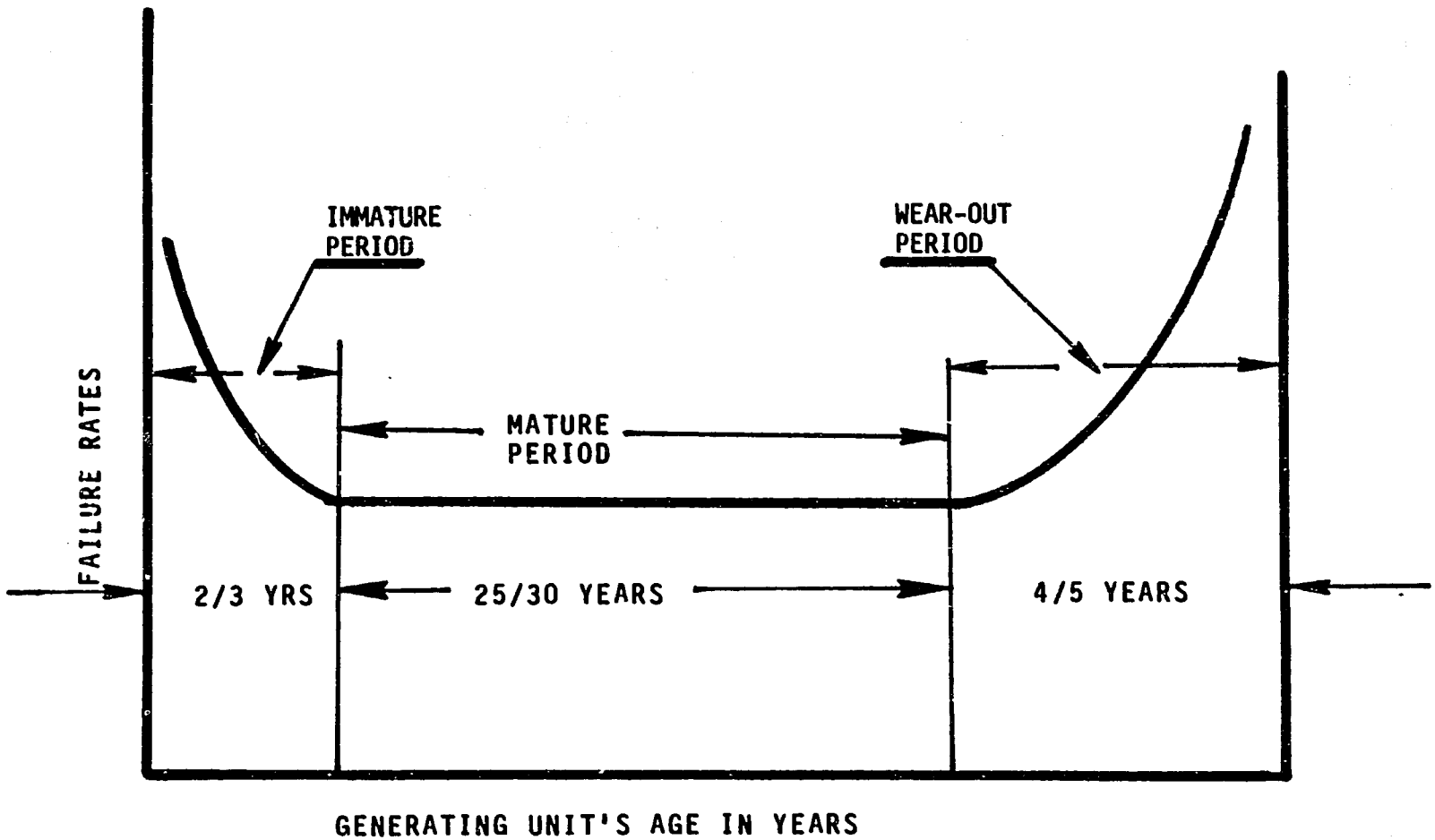

FIGURE 4.3

FAILURE CHARACTERISTICS OF THERMAL GENERATING UNITS

Table 4.6

PEWC Plant Retirement Schedule
(Generating Units over 30 years of age)

Year	Unit Name	Installed Capacity (MW)	Total Retirement Capacity (MW)
1982	Wad Medani 1,2	2 x 0.2 = 0.4	
	Kassaka 7	= 1.10	
	El Obied	= 0.061	1.561
1983	Juba 1,2,3,4	4 x 0.064 = 0.256	
	Kassala 8	= 1.10	
	Juba 7	= 0.064	
	El Obied 6,7	2 x 0.125 = 0.250	-1.670
1984	Wad 3,3	= 0.420	
	Medani	= 0.420	-0.840
1985	El Duiem	3 x 0.314 = 0.942	
		2 x 0.575 = 1.15	
	Atbara 2,3	2 x 0.570 = 1.14	
	El Obied 4,5	2 x 0.125 = 0.250	-3.482
1986	Burri 1,2	2 x 5 = 10	
	Kassala 1	1 x 0.125 = 0.125	
	El Obied	3 x 0.125 = 0.375	-10.5
1987	Kassala 2	1 x 0.125 = 0.125	-0.125
1988	Burri 3	= 10	
	Atbara 4	= 0.570	
	El Getina	3 x 0.065 = 0.195	-10.765
1989	Shendi 1,2,3	3 x 0.061 = 0.183	
	Kassala 5	= 0.188	-0.371
1990	Shendi 4	= 0.125	
	Wau 3,4,5,6	4 x 0.065 = 0.260	
	El Fashir 1,2,3	3 x 0.061 = 0.183	-0.568

Table 4.6 (Con't.)

Year	Unit Name	Installed Capacity (MW)	Total Retirement Capacity (MW)
1991	Burri 4	= 10	
	Atbara	= 1.2	
	Shendi 5	= 0.125	
	Pump Turbines 1,2,3	3 x 2.0 = 6.0	
	Malak 2,3,4	1 x 0.125 = 0.125	
		2 x 0.250 = 0.500	-17.95
1992	El Gourash 1,2,3,4,5,6	= 0.19	
	Port Sudan 1,2	2 x 1.262 = 2.524	
	Malaka	= 0.080	-3.623
1993	Damazine 1	= 0.315	
	Atbara 6	= 1.20	
	Khashm El Girba	3 x 1.402 = 4.206	
	Diesel 1,2,3		
	Kassaka 3,4	2 x 0.188 = 0.376	
	9,10,11	= 1.352	
	Wau 7,8	2 x 0.076 = 0.152	
	Juba 8	= 0.315	
	El Obied 9,10,11	3 x 0.212 = 0.636	
	El Obied 12	= 0.315	
	El Fashir 4,5	2 x 0.159 = 0.318	-9.185
1994	Port Sudan 3,4	2 x 1.23 = 2.46	-2.46
1995	Juba 5,6	2 x 0.188 = 0.376	-0.376
1996	Burri 1-5	5 x 3 = 15	-15
1997	Wad Medani 5,6	2 x 2.88 = 5.76	-5.76
1998	--	--	--
1999	Kilo X	= 15	
	Atbara 7	= 2.066	
	El Fashir 6	= 0.160	-17.226
2000	Shendi 6.7	2 x 0.256 = 0.512	-0.512
			101.974 MW

Table 4.7

Summary of Total Non-Hydro
Capacity Retirement from the PEWC System
During 1982 - 2000

Year	Total Capacity Retirement (MW)
1985	7.5
1990	30.0
1995	63.5
2000	102.0

Chapter 5: Analysis Of Scenario#1
(Conventional Long-Range Outlook)

This energy scenario is a description of the evaluation of the state of the BNG and total electricity sector, the fuel supply, and the energy resources used in Sudan. The conventional outlook of scenario #1 analyzed in this section to quantify the electricity resource mix in Sudan for planning period 1982-2000 if the hydro-electric development recommendations of Nile Waters Study Reports are followed. According to the "Nile Waters Study," after the completion of the Roseires projects, only one major hydro-electric resource can be developed by the end of this century. The recommended hydro-electric project is Merowe (low level) and the completion year has been identified as 1996/97.

In the following sections, the consequences of the recommendations of the "Nile Waters Study Reports" are analyzed in perspective of the long-range national and BNG system development requirements.

5.1 CRITERIA FOR SCENARIO ANALYSIS

The following criteria were used to evaluate the long-range effect of the hydro-electricity development program of Scenario #1.

5.1.1 RESERVE MARGIN REQUIREMENTS

The magnitude of the selected reserve margin influences the magnitude of new capacity requirements. Determinants of the reserve margin include the following:

Previous Page Blank
International Science and Technology Institute, Inc.

- The probable number of forced and planned outages. If the latter is expected to be high then a higher reserve margin would be required for a given reliability standard.

- The desired reliability standards. The higher the standard of reliability, the larger the reserve margin must be.

- The degree of interconnection both within the BNG region, and to other regions outside the BNG service area. The higher this factor is, the higher will be the inherent reliabilities of the electric system, and thus the lower the reserve margin need be for a given reliability standard.

- The size of power plants. If power plants are large, then a failure of one of them means a considerable loss of capacity, and so the reserve margin must be correspondingly higher to cope with such a situation.

SHORT-RANGE RESERVE MARGIN (1982 - 1986)

The PEWC shall maintain at least 20 percent reserve margin over its forecasted annual peak demand.

LONG-RANGE RESERVE MARGIN (1986 - 2000)

The PEWC shall maintain at least 23 percent reserve margin over its forecasted annual peak demand. An extra three percent is included to account for the peak demand uncertainty.

5.1.2 CAPACITY RETIREMENTS

All non-hydro generating units over 30 years of age shall be retired from the system, as discussed in Section 4.4.1 of Chapter 4.

5.1.3 FUEL DISPLACEMENT

PEWC's current expansion plans show that despite an increased hydro capacity, Sudan will continue to be heavily dependent on oil, much of it imported. Consequently, the country will continue to be vulnerable to changes in the world oil situation.

CRITERION

For the long-range period (1986 - 2000), the total oil fired generating capacity should not exceed 25 percent of the system installed capacity.

5.1.4 RESERVE MARGIN CRITERION FOR NATIONAL SYSTEM

A reserve margin criterion of 25 percent is assumed to evaluate the adequacy of the integrated BNG, EG, Red Sea, and other dispersed systems in Sudan for the study period (1982 - 2000).

5.1.5 MAINTENANCE OUTAGE

In the analysis, it has been assumed that approximately 5 percent of the installed capacity will be on unscheduled maintenance at the time of the system peak demand.

5.2 LONG-RANGE OUTLOOK OF BNG SERVICE AREA

The supply additions planned by the PEWC for the BNG service area are dominated by conventional thermal resources such as diesel, gas turbines, and steam. Particularly striking is the heavy dependence on thermal plants to supply power during the 1980s. By the end of the Power III and Power IV projects, 53.5 percent of total capacity in the BNG system will be thermal. However, of the capacity planned to be added by 2000, 958 MW of hydro capacity will be added to the BNG system. To supply the BNG system peak demand of 994 MW by 2000, the total installed capacity requirement will be approximately 1272 MW. Therefore, after the completion of the Merowe project (1996/97) the BNG system will be predominantly hydro at the end of this century.

Table 5.1 and 5.2 illustrate the long-range outlook of Scenario #1. From Table 5.1, it should be noted that during the late 1980s and early 1990s, the BNG system will have negative reserve margins. The long-range planning reserve margin criteria (23 percent) will be violated every year after 1989/90 except for the years 1996/97 and 1997/98.

Table 5.2 indicates the required reserve margins in MW for each year during the study period for system reliability purpose. The last column of Table 5.2 indicates the additional thermal capacity addition requirements for the BNG if the recommended schedule of lower Merowe project is carried out. The results of Table 5.1 and 5.2 are illustrated in Figure 5.1. In Figure 5.1, the steps in the generating capacity curve indicate the addition of new generating capacity to the system. The "planning criteria" curve indicates the installed reserve margin requirements for system reliability purposes each year. It is important to note from Figure 5.1, that the adopted reserve margin criteria will be violated after 1989/90. The capacity shortage in the early 1990s can only be alleviated by installing combustion turbines or diesel units in the early years of the 1990s. As planned now, the capacity and energy output of the Merowe hydro plant will have very little impact on the BNG system for this century.

Table 5.1

Blue Nile Grid System
Scenario #1

Conventional Long-Range Outlook
as Proposed in the Nile Waters Study Reports

Year	Peak Demand (MW)	Capacity Retirement in MW	Capacity Expansion in MW	Installed Capacity in MW	Reserve Margin MW	Reserve Margin %
1982/83	262	-1.56	+10	278.5	+16.5	6.3
1983/84	281	-1.67	+130	407.0	+126.0	44.8
1984/85	304	-0.840	+40	406.0	+102.0	33.5
1985/86	329	-3.482	+60	462.7	+133.7	40.6
1986/87	356	-10.5	+60	512.2	+156.2	43.8
1987/88	386	-0.125	--	512.1	+126.1	32.6
1988/89	418	-10.765	+40	541.3	+123.3	29.5
1989/90	452	-0.371	+30	571.0	+119.0	26.3
1990/91	489	-0.568	--	570.0	+81.0	16.5
1991/92	529	-17.95	--	552.0	+23.0	4.3
1992/93	572	-3.623	--	548.5	-23.5	-4.1
1993/94	619	-9.185	--	539.2	-79.8	-12.9
1994/95	670	-2.46	--	536.8	-132.2	-19.9
1995/96	725	-0.376	--	536.40	-188.6	-26.0
1996/97	784	-15.0	+600	1121.4	+337.4	+43.0
1997/98	849	-5.76	--	1115.6	+266.6	+31.4
1998/99	918	-17.226	--	1098.4	+180.4	+19.6
1999/2000	994	-0.512	--	1098.0	+104.0	+10.46

Table 5.2

Blue Nile Grid System Scenario #1

Conventional Long-Range Outlook as
Proposed in the 'Nile Waters Study Reports'

Year	Peak Demand (MW)	Reserve Margin Requirement	Planned Reserve Capacity	Unscheduled Outage (MW) 5% of Installed Capacity	Additional Thermal Capacity To Meet Reserve Margin Criteria
1982/83	262	52.4	16.5	-14.0	50.0
1983/84	281	56.2	126.0	-20.0	--
1984/85	304	60.8	102.0	-20.0	--
1985/86	329	65.8	133.7	-23.0	--
1986/87	356	81.9	156.2	-26.0	--
1987/88	386	88.8	126.1	-26.0	--
1988/89	418	96.1	123.3	-27.0	--
1989/90	452	104.0	119.0	-29.0	14
1990/91	489	112.5	81.0	-29.0	61.0
1991/92	529	121.7	23.0	-27.0	126
1992/93	572	131.6	-23.5	-27.0	182
1993/94	619	142.4	-79.8	-27.0	250
1994/95	670	154.1	-133.2	-27.0	314.3
1995/96	725	166.7	-188.6	-27.0	383.3
1996/97	784	180.3	337.4	-56.0	--
1997/98	849	195.3	266.6	-56.0	--
1998/99	918	211.1	180.4	-55.0	86
1999/2000	994	228.6	104.0	-55.0	180

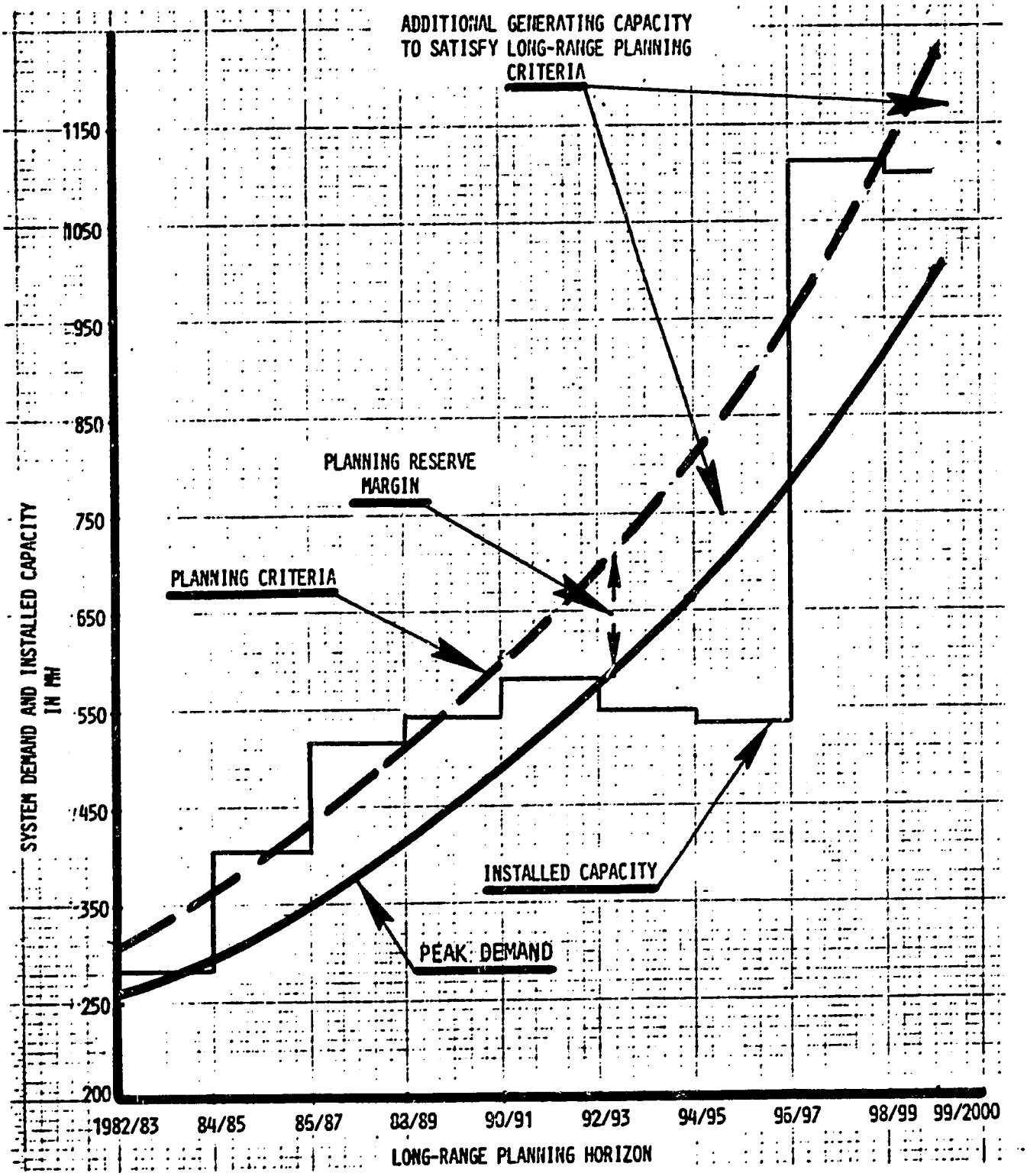

LONG-RANGE GENERATION EXPANSION REQUIREMENTS

FIGURE 5.1

Figure 5.2, 5.3, 5.4, and 5.5 illustrate the overall resource mix of the BNG system for the key years 1985/86, 1989/90, 1994/95 and the year 2000. It should be noted that except for the year 2000, none of the key years satisfy the fuel displacement criterion of 25 percent thermal generating capacity.

If the Master Plan of the "Nile Waters Study" is followed, by 1994/95 the total thermal generation in the BNG system will be about 58 percent. During the early 1990s, a generation expansion program similar to Power III and Power IV projects will have to be initiated to meet the peak demands.

5.3 NATIONAL OUTLOOK OF SCENATIO #1

In Table 5.3 and 5.4, the total capacity demand for the years 1984/85 1989/90, 1994/95, and 1999/2000, and reserve margin requirements, are included. Based on the existing hydro-electric resource plans and total capacity additions of the Power III and Power IV projects, the following points should be noted:

FIGURE 5.2

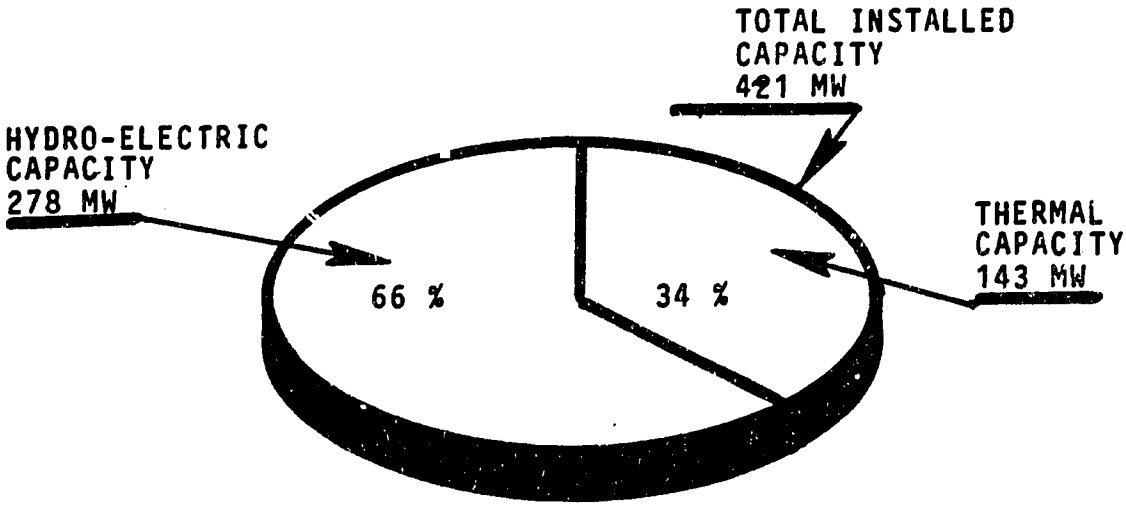

GENERATING RESOURCE MIX FOR THE BLUE NLIE
GRID SYSTEM, YEAR : 1985/ 1986

FIGURE 5.3

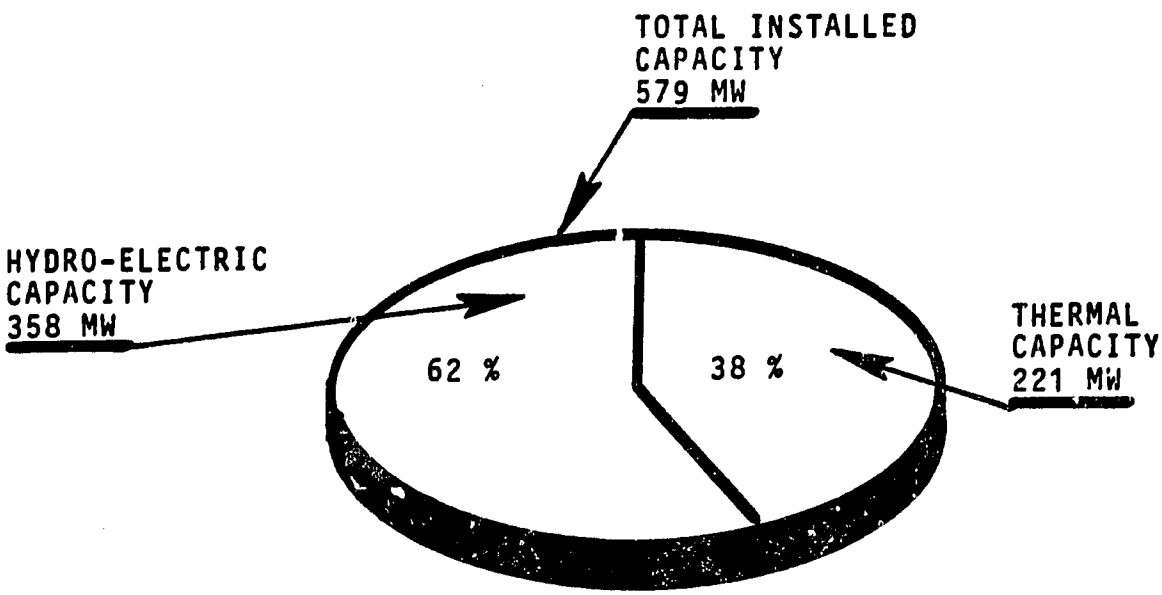

GENERATING RESOURCE MIX FOR THE BLUE NILE
GRID SYSTEM, YEAR: 1989/ 1990

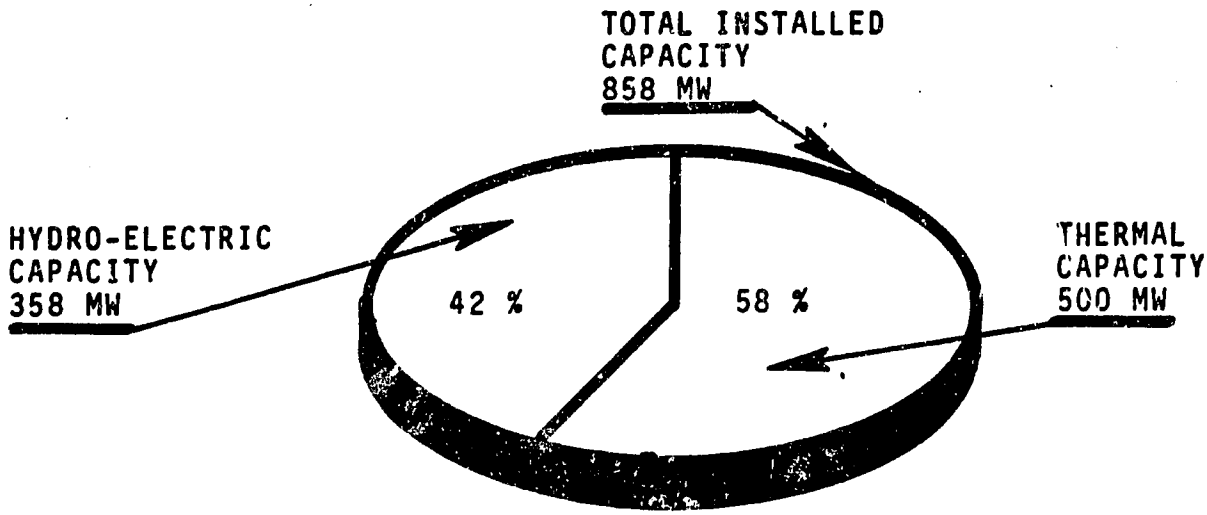

FIGURE 5.4

GENERATING RESOURCE MIX FOR THE BLUE NILE GRID SYSTEM, YEAR : 1994/ 1995

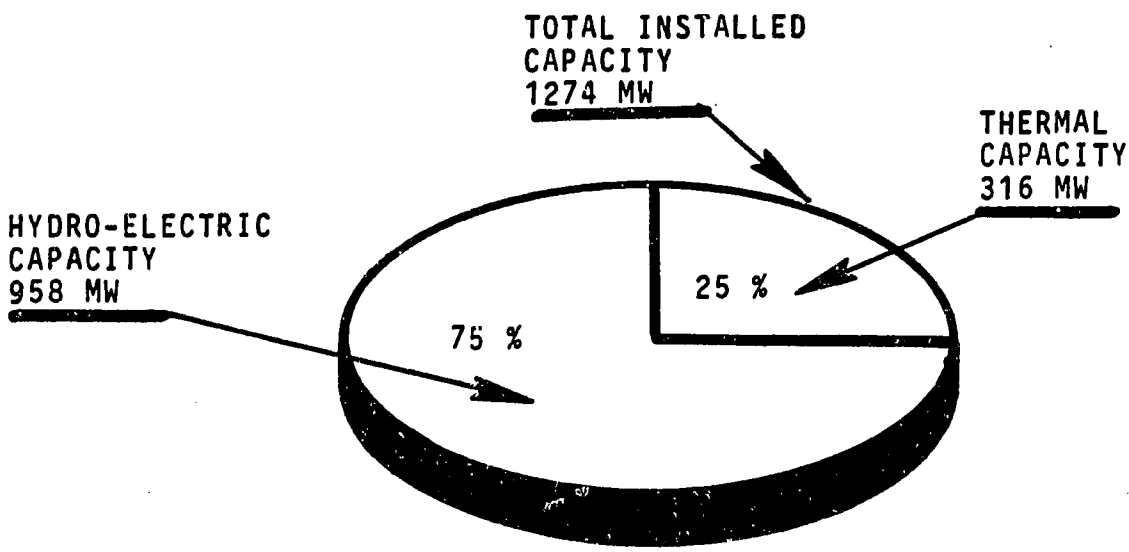

FIGURE 5.5

GENERATING RESOURCE MIX FOR THE BLUE NILE GRID SYSTEM, YEAR : 1999/ 2000

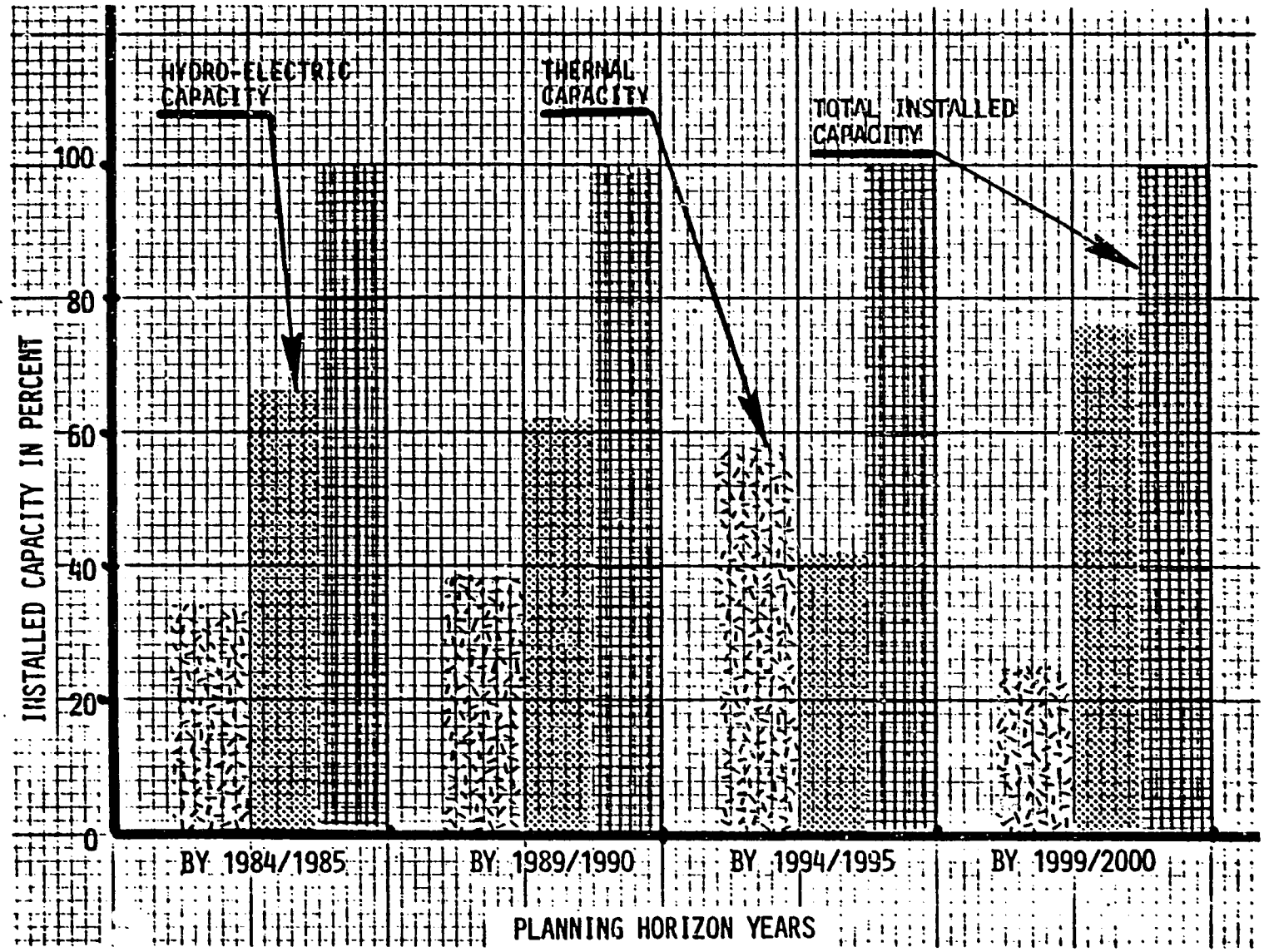

FIGURE 5.8

SCENARIO 1: GENERATING RESOURCE MIX FOR PLANNING HORIZON YEARS

Table 5.3

National Outlook of Scenario #1

Year	BNG Area	Other Areas	Total	Installed Capacity (MW)	Reserve Margin MW	Reserve Margin %
1984/85	304	99.5	404	422	+18	4.4
1989/90	452	225	677	594	+83	12.2
1994/95	670	375.5	1046	593	-453	-43.3
1999/2000	994	533.0	1527	1138	-389	-25.47

Table 5.4

National Outlook of Scenario #1

Year	Peak Demand (MW)	Installed Capacity Requirements (MW)	Planned Hydro Capacity (MW)	Additional Thermal Capacity
1984/85	404	525	248	277
1989/90	677	880	358	522
1994/95	1046	1360	358	1002
1999/2000	1527	1985	958	1027

a. To cover near-term and long-term expansion growth, over 1000 MW of oil and gas fired capacity will be required nationally by the end of the year 2000.

b. The existing hydro-electric development program does not solve national capacity and energy requirements for the study period.

c. Figure 5.6 illustrates the total hydro capacity expansion plans and thermal capacity requirements for Sudan during 1982 - 2000.

d. Figures 5.7, 5.8, 5.9, and 5.10 illustrate the national electricity resource mix for the years 1984/85, 1989/90, 1994/95 and 1999/2000 if the present hydro electric development program is followed. It should bo noted that nationally the fuel displacement criterion will not be satisfied during 1982 - 2000.

e. Escalating costs for fuels (oil) and high outages of thermal units would increase electricity prices in the 1980s and 1990s.

   o The needs for thermal power plant cooling water would increase significantly.

FIGURE 5.7

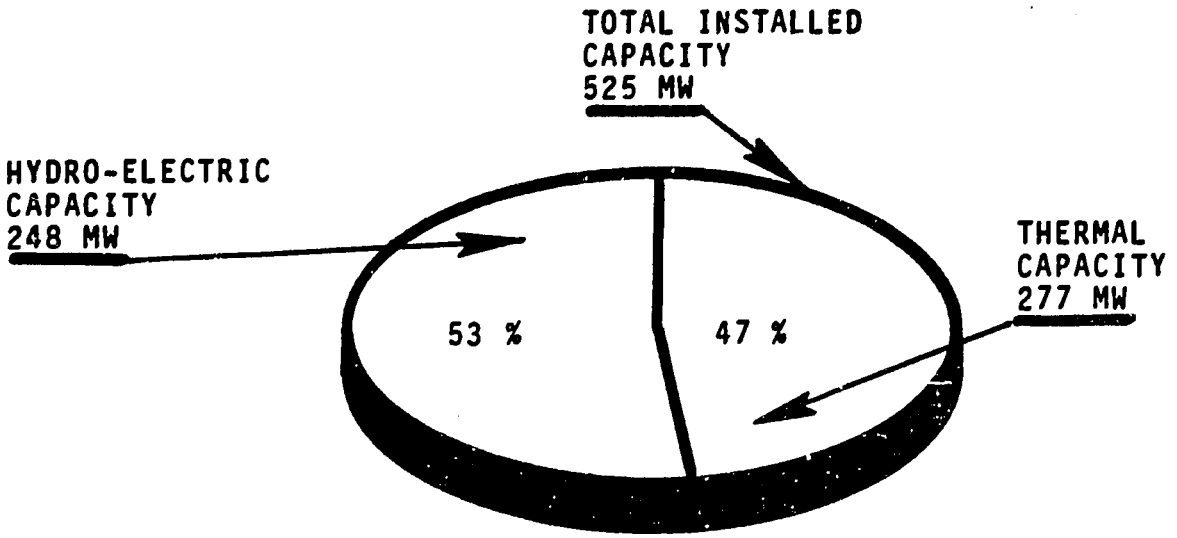

NATIONAL OUTLOOK OF GENERATING RESOURCE MIX
YEAR : 1984/ 1985

FIGURE 5.8

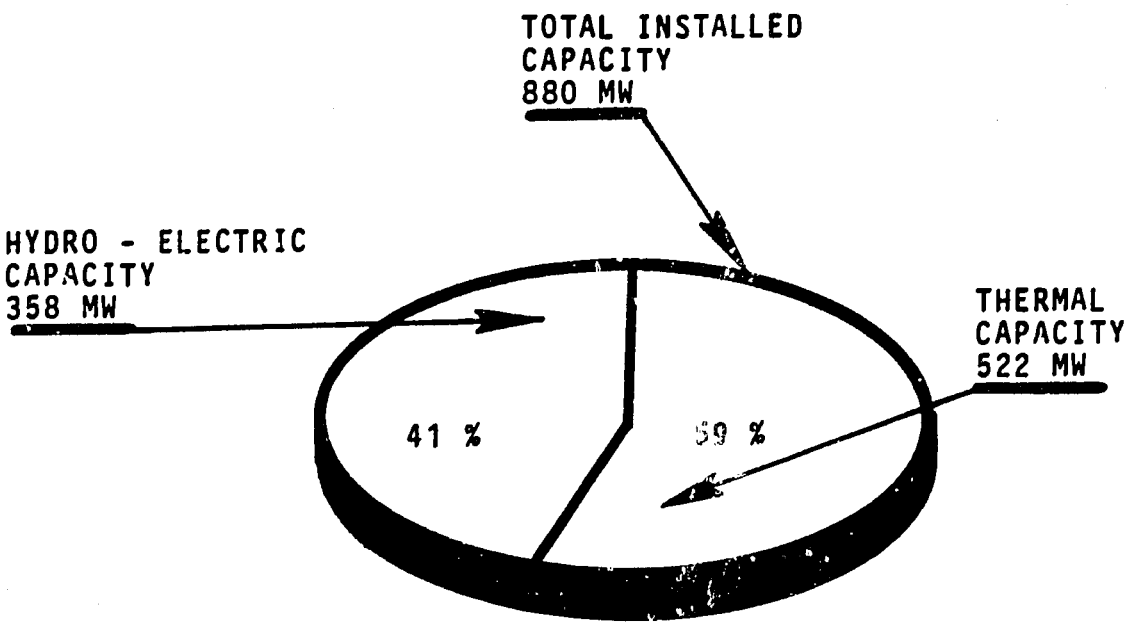

NATIONAL OUTLOOK OF GENERATING RESOURCE MIX
YEAR : 1989/1990

FIGURE 5.9

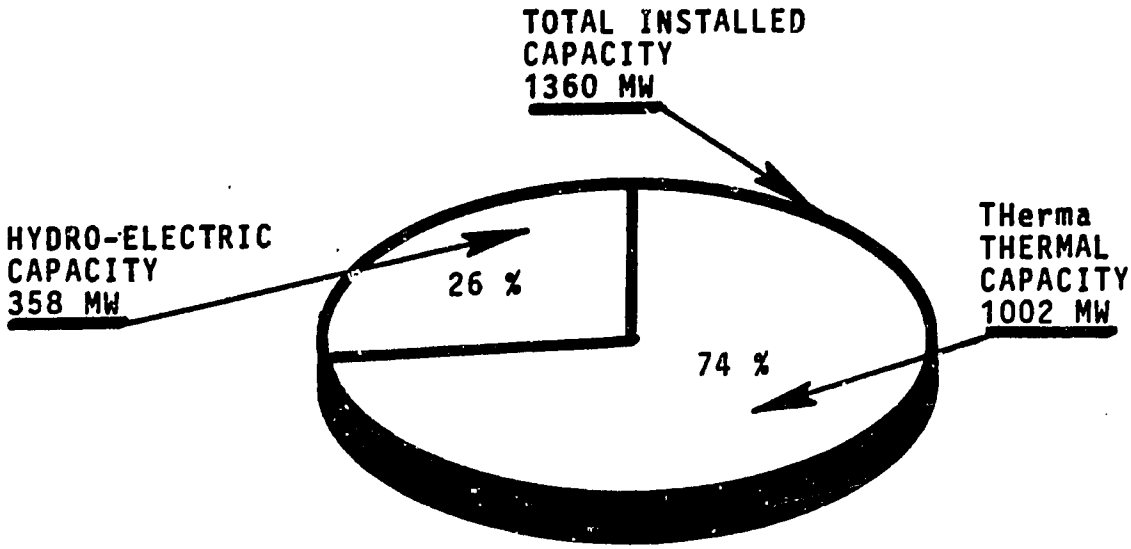

NATIONAL OUTLOOK OF GENERATING RESOURCE MIX
YEAR : 1994/1995

FIGURE 5.10

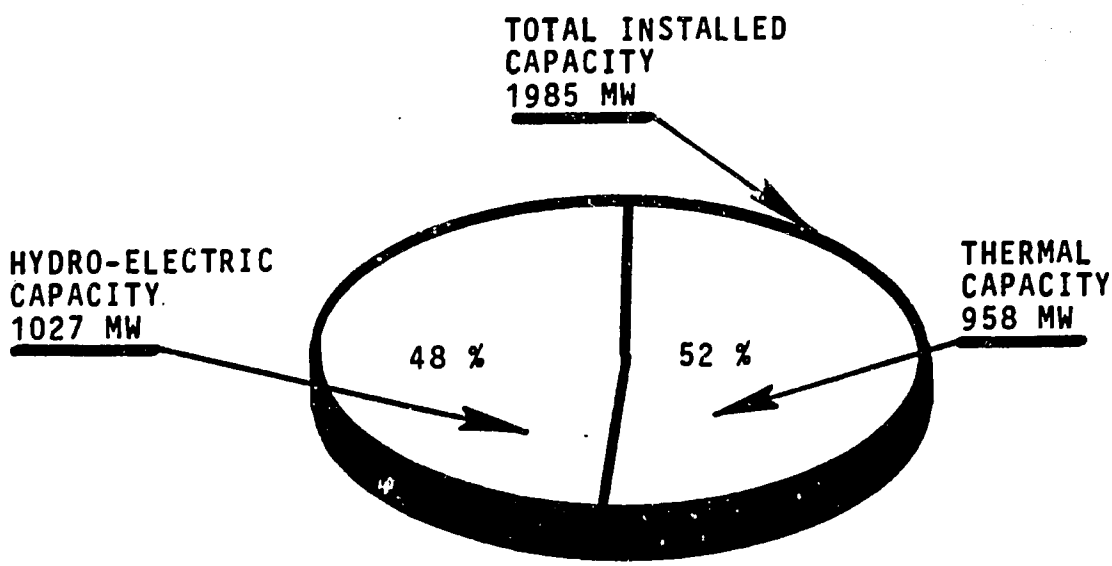

NATIONAL OUTLOOK OF GENERATING RESOURCE MIX
YEAR : 1999/2000

- The health and environmental risks from thermal power generation would tend to worsen, and the distribution of those risks fall more on rural residents.

These finds portend an extremely difficult future for the PEWC and the people of Sudan under long-range Scenario #1. Even without the extension beyond 1990, the plants proposed for the Power IV projects (Roseires #7, Khartoum North or Kosti units) probably will face considerable financial hurdles.

5.4 CONCLUSIONS

The following conclusions can be drawn for the long-range outlook of Scenario #1:

- If the nation (Sudan) continues along its present decision making path regarding electric energy supply and demand, it risks greater supply/demand gaps in the late 1980s and most of the 1990s, increased economic and social disruption, and a marked decrease in the number of options for the future.

- Even in the absence of price increase or volume restrictions on foreign oil supplies, the nation does not presently have (nor has it planned) the refinery and crude oil production capacity to meet the growing thermal electric generating capacity requirements under Scenario #1.

- Sudan is without a comprehensive national electricity development policy to allocate and use national resources -- a policy within which a total energy policy (irrigation, transportation, etc.) would play an important part.

- The present way of developing national policies is probably insufficient to create a national electricity energy policy, largely because energy supply and demand problems are not uniform throughout the country; and social, economic, political, cultural and environmental values are also different.

- If near supply/demand balance is to be achieved within the next decade, and the likelihood of doing this is very small under Scenario #1, major hydro resources (both large and dispersed small hydro) and alternative technology development decisions must be made within the next year.

Chapter 6: Analysis Of Scenario#2
(Alternative Resources)

In order to explore how the future might change Sudan's electric energy system, the effects of thousands of possibilities and events could be studied. One scenario might be used to explore the consequences of higher imported oil prices. Another could be used to examine what would happen if external events caused some serious disruption of imported oil supplies. The purpose here, however, is to examine the desirability and consequences of a more vigorous drive toward the use of national hydro-electric and alternative resources (including renewable energy resources such as small hydro, solar, biomass and co-generation) and increased use of energy conservation and load management in comparison to a future resulting from the inertia of current trends (Chapter 5) with no further redirection.

The choice of the theme of Scenario #2 (or Alternative Resources) was made on the basis of several considerations. First, it is in the national interest of Sudan that the policy of the government should be to promote all feasible uses of hydro resources to reduce the dependence on imported oil. Thus, one motivation for developing Scenario #2 is to explore the expediting or partial development of Merowe hydro-electric resources by 1991 rather than by 1997 as recommended in the "Nile Waters Study Reports." Second, there seems to be a growing concensus that a future characterized by increased conservation and greater use of alternative resources may be the most fruitful path for the nation to follow. In a recent article in Foreign Affairs, Stobaugh

Previous Page Blank

Yergin of the Harvard Business School wrote, "...in terms of allocating resources and effort for further major increments of energy, the evidence strongly indicates that the nation would be better served by concentrating its exploratory and development 'drilling' in the highly promising but still largely untested acreage of conservation and solar energy."*

Likewise, Amory Lovins concluded in an analysis that has become influential worldwide that: "...a prompt and serious commitment to efficient use of energy, rapid development of renewable energy sources matched in scale and in energy quality to end use needs, and special transitional fossil-fuel technologies...though it represents a shift in direction, offers many social economic, and geopolitical advantages...."**

Therefore, Scenario #2 theme selected allows analysis of additional policies needed to reshape Sudan's electricity eneergy future in a direction that is increasingly being acknowledged as being of the most interest. The "alternative resources" or Scenario #2 requires a greater reliance on conservation (demand reduction technologies), expedite hydro-electric energy development, and other renewable resources.

* Robert Stobaugh and Daniel Yergin, "After the Second Shock: Pragmatic Energy Strategies," Foreign Affairs, April 1979.

**Amory Lovins, Soft Energy Paths--Toward a Durable Peace, Ballinger: Cambridge, MA.,1977

6.1 ALTERNATIVE RESOURCE DEVELOPMENT PROGRAM

In order to meet the PEWC's projected needs, quite a few new plants must be built and in operation in the 1990s. The logistics of meeting such a schedule pose major challenges. In developing the alternative resource plans, two considerations were addressed: whether sufficient lead time exists to build the hydro projects required and whether the essential resources and technologies for other resources are commercially available. The analysis quickly showed that the minimum lead time for a major hydro project such as Merowe would be about 10-11 years. For small hydro electric (less than 15 MW) plant, the lead time varies from 3 to 6 years.

It has also been assumed that in the 1990s the "distributed energy systems" or technologies will be commercially available in Sudan. The term "distributed energy systems (DES)" is applied to those energy systems which use (largely, but not exclusively) local energy sources to meet local energy needs. They may vary in size from small solar systems designed to supplement the hot water or cooling needs of a single family residence to a cogeneration plant which uses, for example, wood wastes to provide electricity and process steam to a paper mill and the local community. The systems may be relatively simple, as in the case of low-head hydro or small hydro plant, or complex, if electrical or thermal energy storage systems are included; they may be isolated or they may be connected to the local electric utility grid either to receive power in time of shortages or to deliver it to the utility in times of

surplus. The role the DES will play in Sudan is likely to depend upon government policies, population density, local energy resources, and energy demands. DES can supplement the existing centralized power system in remote areas or may become a dominant component of the overall national electric energy supply system.

6.1.1 SMALL HYDROELECTRIC OR COGENERATION POTENTIAL

For the purpose of this discussion, small hydro-electric is considered to encompass projects under 15 MW. The hydraulic head may be comparable to that found in conventional hydro-electric installations, but smaller water flow restricts electrical capacity in those instances. In this form of electricity generation, water in pipelines, canals, or behind existing dams is fed to a turbine which drives a generator to produce electricity.

The primary mode of application is to install a small hydro-electric facility on a portion of a water project, such as an irrigation canal, where electricity is not already being produced. There are several small hydro-electric potential sites within Sudan. A survey should be made to determine the actual capacity and energy potentials for the 1982-2000 period. However, for the purpose of alternative resource development it has been assumed that approximately 415 MW small hydro or cogeneration type of alternative electric energy resource development for the remote area

will be feasible during 1982-2000.

6.2 RESOURCE MIX OF SCENARIO #2

The resource mix of Scenario #2 is given in Table 6.1. As may be seen from Table 6.1, in the early years the generation expansion plans are unchanged, i.e., as planned for the Power III and Power IV development programs. During 1988/89 and 1989/90, 20 MW and 30 MW alternative resources were added. This resource is considered primarily for the other dispersed areas in the PEWC system. To alleviate the capacity shortage of the BNG system, the Merowe hydro-electric development program is shifted to the year 1990/91 from 1996/97 as a first phase of development. The total hydro-electricity development of lower Merowe site is proposed in three phases. In each phase, 200 MW will be added to the PEWC system.

In Table 6.1, another hydro-electric project in the late 1990s is also identified. A total of 200 MW is added in an increment of 100 MW in 1996/97 and 1997/98. This development scheme might be sherik or Shirri Island hydro-electric project.

6.3 RESERVE MARGIN ANALYSIS FOR BNG SYSTEM

The alternative resource development plan of Scenario #2 is one possible way of meeting the BNG region's need for electricity for the study period. In Table 6.2, the total installed capacity, peak demands, and reserve margins for BNG system are included.

Table 6.1

Scenario #2: Alternative Resource Development Program

Year	Power III & Power IV Expansion (MW)	Expedite Merowe Development (MW)	Small Hydro Cogeneration etc.	Other Alternative Resources	Other Hydro-electric Resources	Total Alternative Resources
1982/83	+10					10
1983/84	+130					130
1984/85	+40					40
1985/86	+60					60
1986/87	+60					60
1987/88	--					--
1988/89	+40		20			60
1989/90	+30		30			60
1990/91		200*	40			240
1991/92		200*	50	10[1]		260
1992/93		200*	50			250
1993/94			50			50
1994/95			50			50
1995/96			50	15[2]		65
1996/97			50		100	150
1997/98					100	100
1998/99						--
1999/2000						--

* Merowe (lower)
1 Cogeneration or Biomass
2 Solar, Photovoltaics, Fuel Cell, etc.
3 Shereik or Sabaloka or Dal

Table 6.2

Scenario #2
(BNG System Only)

Long-Range Outlook of Alternative
Resource Development Without Conservation
Peak Demand as Forecasted

Year	Forecast Peak Demand (MW)	Alternative Resource Expansion (MW)	Installed Capacity (MW)	Reserve Margin MW	Reserve Margin %	Reserve Margin Criteria*
1982/83	262	10	278.5	16.5	6.3	25%
1983/84	281	130	407.0	126.0	44.8	25%
1984/85	304	40	406.0	102.0	33.5	25%
1985/86	329	60	462.7	133.7	40.6	28%
1987/88	386	--	512.1	126.1	32.6	28%
1988/89	418	40	541.3	123.3	29.5	28%
1989/90	452	30	571.0	119.0	26.3	28%
1990/91	489	200	770.0	281.0	57.4	28%
1991/92	529	210	952.0	423.0	80.0	28%
1992/93	572	200	1148.0	576.0	100.0	28%
1993/94	619	--	1139.0	520.0	84.0	28%
1994/95	670	--	1137.0	467.0	69.7	28%
1995/96	725	15	1151.0	425.0	58.6	28%
1996/97	784	100	1250.0	466.0	59.4	28%
1997/98	849	100	1335.0	486.0	57.2	28%
1998/99	918	--	1330.0	412.0	44.8	28%
1999/2000	994	--	1313.0	319.0	32.1	28%

From the reserve margin column, it should be noted that the long-range planning criterion of 28 percent (23 percent for forced outages and 5 percent for unscheduled/scheduled outages) is satisfied in every year. In fact, the reserve margin capacities in the 1990s are almost double of what is assumed to be adequate for the long-range purpose.

The effects of energy conservation and/or load management program is analyzed in Table 6.3 for the same alternative resources of Scenario #2. For the short-range period (1982/83 to 1985/86), the peak demand reduction values were taken from a recent PEWC report (Recommendations for the Short-Range, 1981-1986, Reliability Improvement Programs - August 14, 1981). The demand reductions for other years are assumed to be approximately 5 to 6 percent of the forecasted peak demand. The reserve margin results of Table 6.3 indicate that if load management and conservation efforts are successful throughout the 1990s' the BNG system will have more than adequate or unnecessary reserve margins. Figure 6.1 illustrates the results of Table 6.2, 6.3, and Scenario #1 for the 1990s.

6.3.1 ALTERNATIVES OF SCENARIO #2

The prospective generating capacity additions program for the years 1990 through 2000 discussed in the previous section results in higher reserve margins for the 1990s as noted in Table 6.2 and Table 6.3. To optimize the capacity

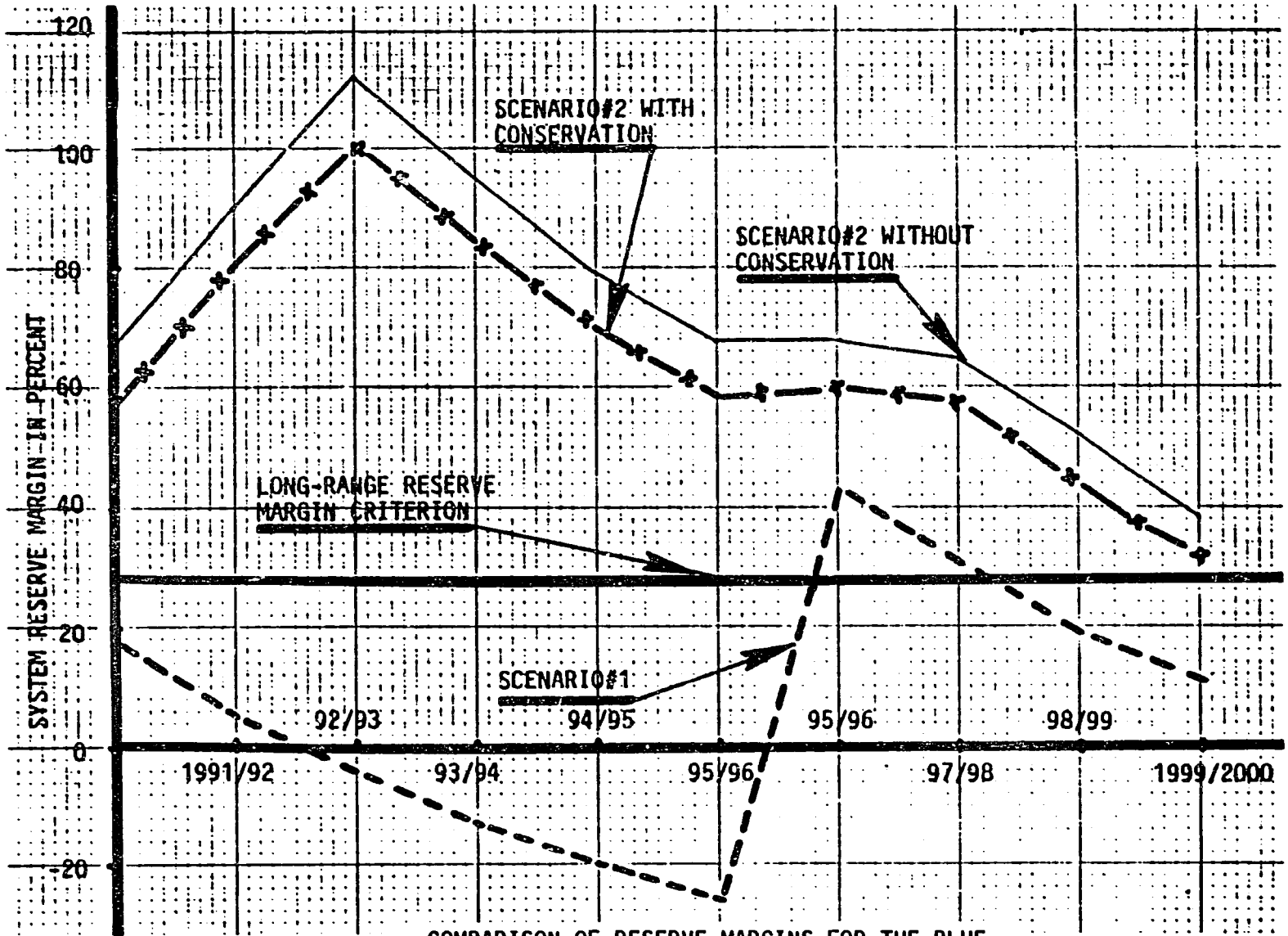

COMPARISON OF RESERVE MARGINS FOR THE BLUE NILE GRID SYSTEM FOR TWO SCENARIOS.

FIGUR 6.1

Table 6.3

Scenario #2
(BNG System Only)

Long-Range Outlook of Alternative
Resource Development with Conservation

	Forecast Peak Demand (MW)	Peak Reduction Due to Conservation (MW)	Modified Peak Demand (MW)	Alternative Resource Expansion (MW)	Installed Capacity (MW)	Reserve Margin MW	Reserve Margin %
1982/83	262	-15	247	+10	278.5	31.5	12.7
1983/84	281	-17	264	130	407.0	143	54.1
1984/85	304	-19	285	40	406.0	121	42.4
1985/86	329	-21	308	60	263.7	155	50.3
1986/87	356	-22	334	60	512.2	178	53.2
1987/88	386	-24	362	--	512.1	150	41.4
1988/89	418	-25	393	40	541.3	148	37.6
1989/90	452	-27	425	30	571.0	146	34.3
1990/91	489	-28	461	200	770.0	309	67.0
1991/92	529	-30	499	210	942.0	453	90.0
1992.93	572	-32	540	200	1148.0	608	112.0
1993/94	619	-34	585	--	1139.0	554	94.7
1994/95	670	-36	634	--	1137.0	504	79.5
1995/96	725	-38	687	15	1151.0	464	67.5
1996/97	784	-40	744	100	1250.0	506	68.0
1997/98	849	-42	807	100	1335.0	528	65.4
1998/99	918	-44	874	--	1330.0	456	52.2
1999/2000	994	-46	948	--	1313.0	365	38.5

margin requirements for the 1990s, the following three alternatives of Scenario #2 are analyzed:

a. ALTERNATIVE #1

The hydro-electric resource development of this alternative is the same as in Table 6.2 or Table 6.3

b. ALTERNATIVE #2

In this alternative the following hydro-electric resource development is considered:

Year	1990/91	1992/93	1994/95	1996/97	1997/98
Merowe	200 MW	200 MW	200 MW	--	--
Shereik or Shirri	--	--	--	100 MW	200 MW

c. ALTERNATIVE #3

This alternative is based on the assumptions that the hydro resource development at Shereik or Shirri or any other site can be delayed from 1996/97 to 1998/99. The on-line schedule year for the Merowe and other potential hydro-electric generating plans are as follows:

Year	1990/91	1992/93	1994/95	1998/99	1999/2000
Merowe	200 MW	200 MW	200 MW	--	--
Shereik or Shirri	--	--	--	100 MW	50 MW

The resultant installed capacity and reserve margins for all three alternatives are included in Table 6.4. It should be noted that the alternative #3 provides the reduced reserve margins for the 1990s and also meets the planning reserve margin criterion of 28 percent. Therefore, in all subsequent analysis, the hydro-electric development schedule of alternative #3 of Scenario #2 will be considered as the recommended "Alternative Resource" development program of Scenario #2. Figure 6.2 illustrates the results of three alternatives and compares with the reserve margins of Scenario #1, as planned for Merowe hydro-electric resource development.

Figures 6.3, 6.4, and 6.5 illustrate the overall generation resource mix of the BNG system for the key years 1990/91. 1994/95, and the year 2000. It should be noted that the fuel displacement criterion is satisfied by the end of the year 2000.

Table 6.4

(BNG System Only)

Hydro-electric Resource Development Alternatives

Year	Installed Capacity (MW) Alternatives			Reserve Margins (%) Alternatives			
	#1	#2	#3	#1	#2	#3	Criteria
1990/91	770	770	770	57.4	57.4	57.4	28%
1991/92	952	780	780	80.0	47.4	47.4	28%
1992/93	1148	952	952	100.0	66.4	66.4	28%
1993/94	1139	943	943	84.0	52.3	52.3	28%
1994/95	1137	1148	1148	69.7	71.3	71.3	28%
1995/96	1151	1154	1154	58.6	58.6	58.6	28%
1996/97	1250	1239	1139	59.4	58.0	45.0	28%
1997/98	1335	1335	1135	57.2	57.2	33.0	28%
1998/99	1330	1330	1230	44.8	44.8	34.0	28%
1999/2000	1313	1313	1283	32.1	32.1	29.0	28%

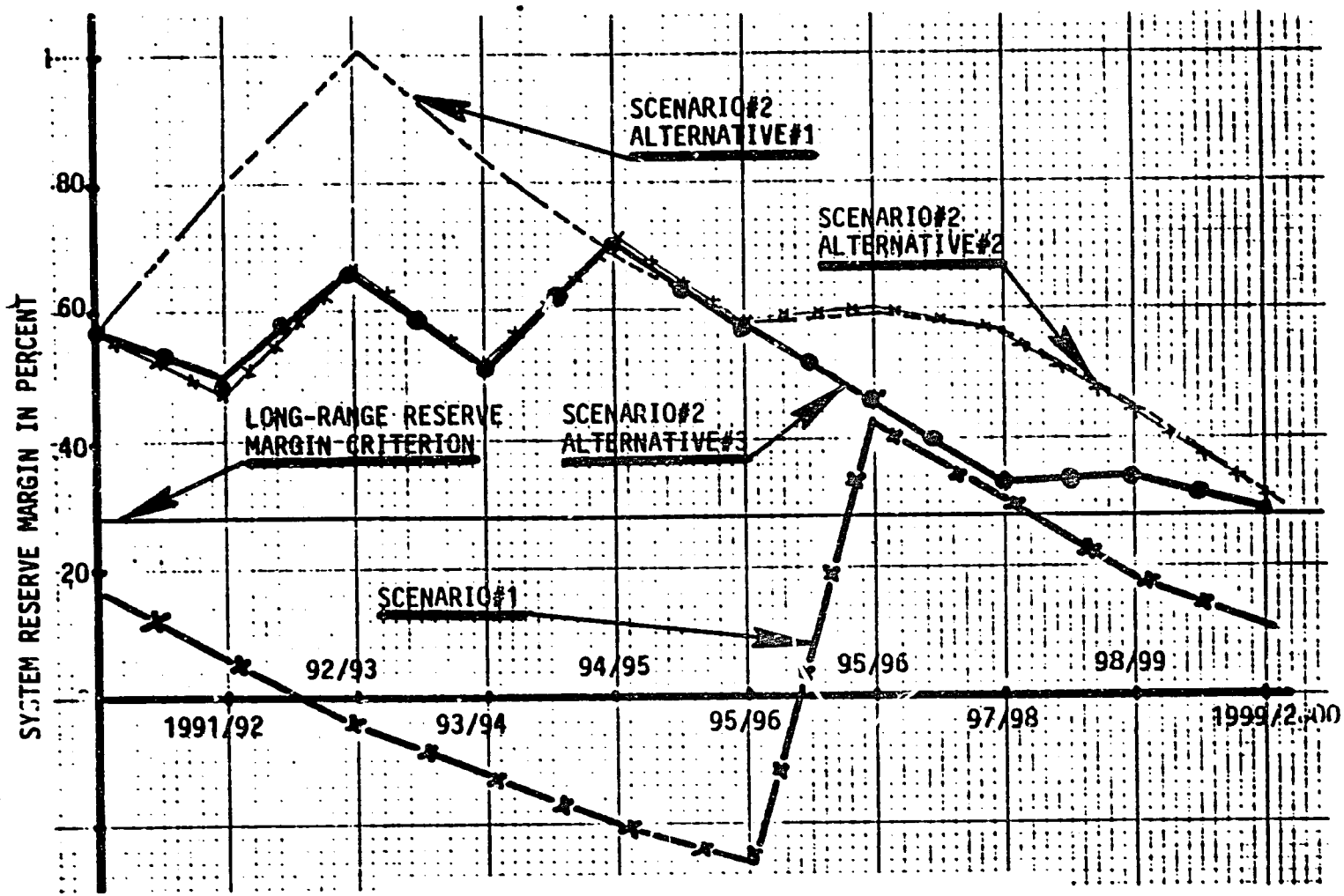

COMPARISON OF RESERVE MARGIS FOR SCENARIO#2 ALTERNATIVES

FIGURE 6.2

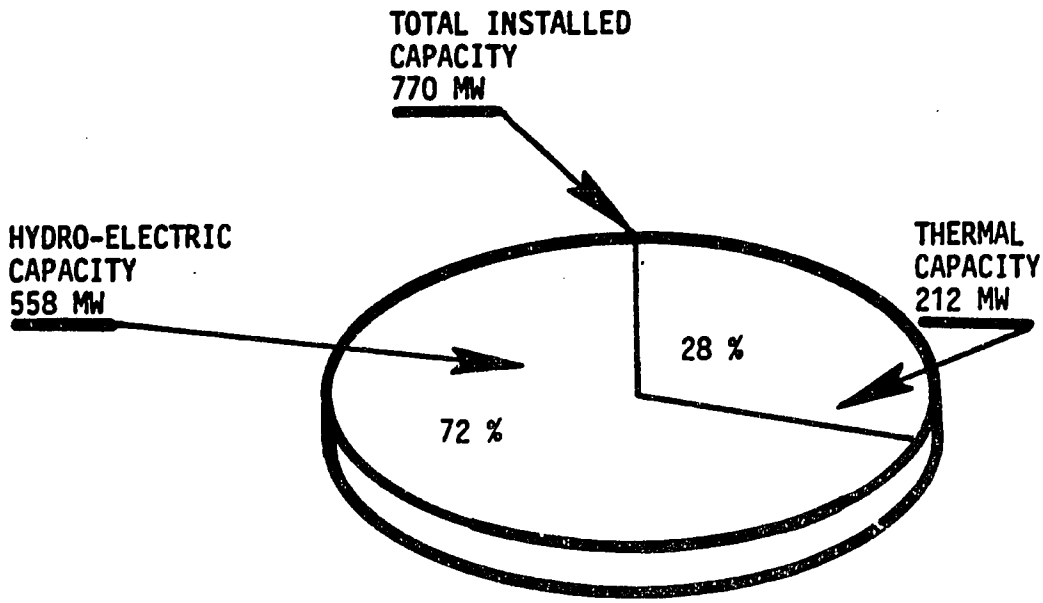

FIGURE 6.3

GENERATING RESOURCE MIX FOR THE BLUE NILE GRID SYSTEM, YEAR : 1990/1991

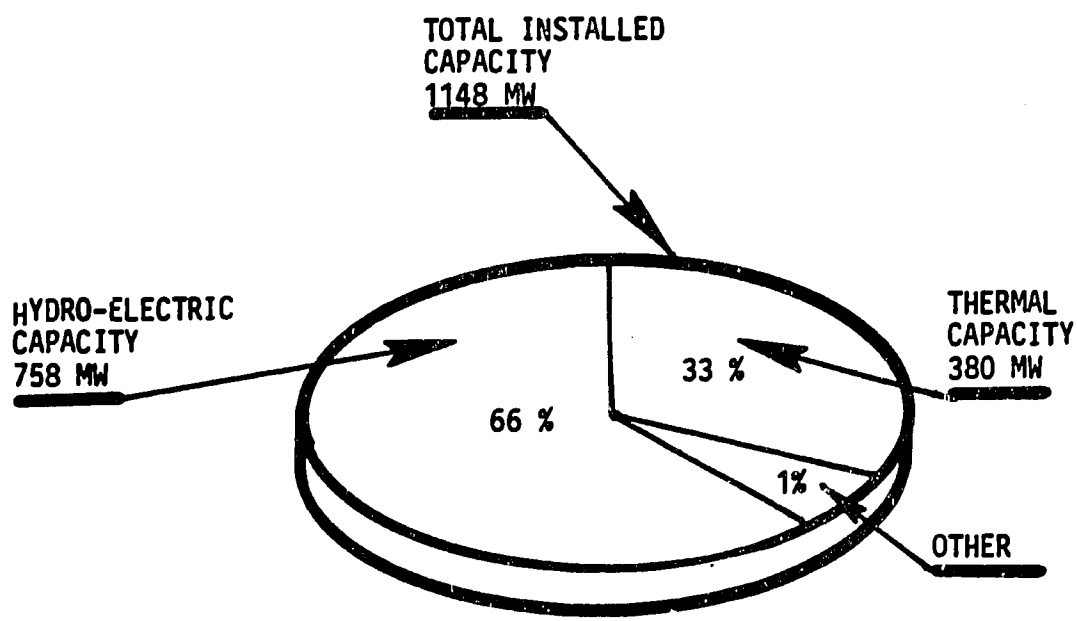

FIGURE 6.4

GENERATING RESOURCE MIX FOR THE BLUE NILE GRID SYSTEM, YEAR : 1994/ 1995

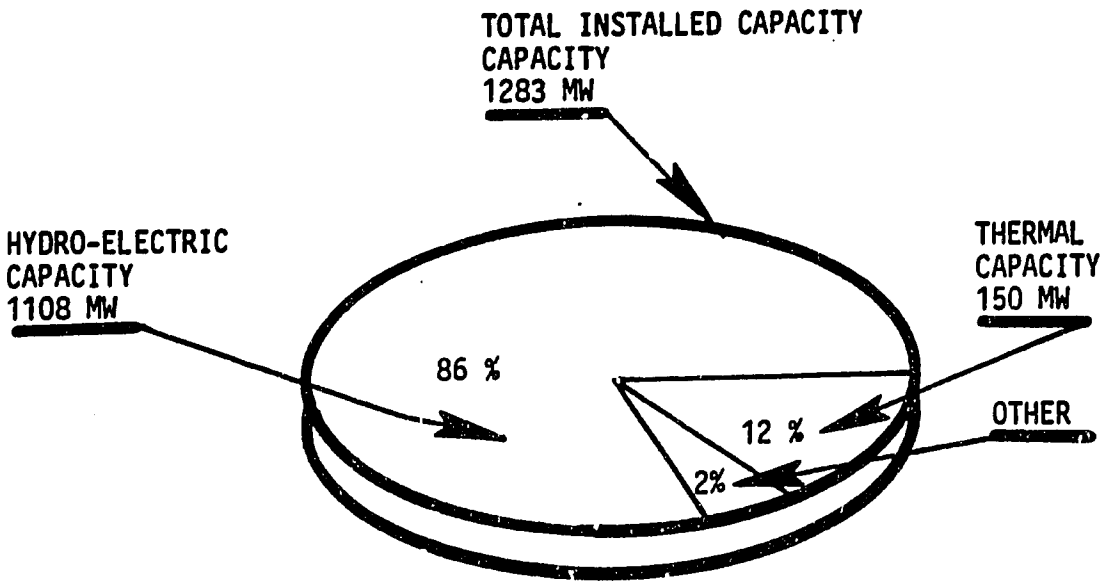

GENERATING RESOURCE MIX FOR THE BLUE NILE GRID SYSTEM, YEAR : 1999/ 2000

FIGURE 6.5

6.4 NATIONAL OUTLOOK OF SCENARIO #2

The national outlook of "Alternative Resource" Scenario #2 for the long-range period is summarized in Table 6.5. The peak demands in Table 6.5 are as forecasted. To meet the utilities projected load growth between 1990/91 and 2000 and provide for the retirement of some oil fired units, an additional 750 MW of hydro capacity would have to be added. Under this scenario, hydro-electric plants would provide about 90 percent of Sudan's electrical generation by the year 2000. Oil and other thermal generation would be significantly reduced to about 10 percent of system capacity from the 1989/90 capacity of 38 percent (Scenario #1). Figures 6.6 and 6.7 illustrate the national electric generation resource mix for the years 1994/95 and 1999/2000. It is expected that the capacity factor of the remaining thermal (oil-fired) generation system in the 1990s would be reduced significantly. The remaining thermal units would be used only during peak hours or as a stand-by capacity for emergency generation.

The reserve margin results of Table 6.5 can further be improved if the effects of energy conservation and load management for peak reduction are considered. Table 6.6 indicates the net effect of peak reduction programs on national capacity reserve margins for the study period. It should be noted that all years in 1990s, the national reserve margin criterion of 25 percent are satisfied, except for the year 2000.

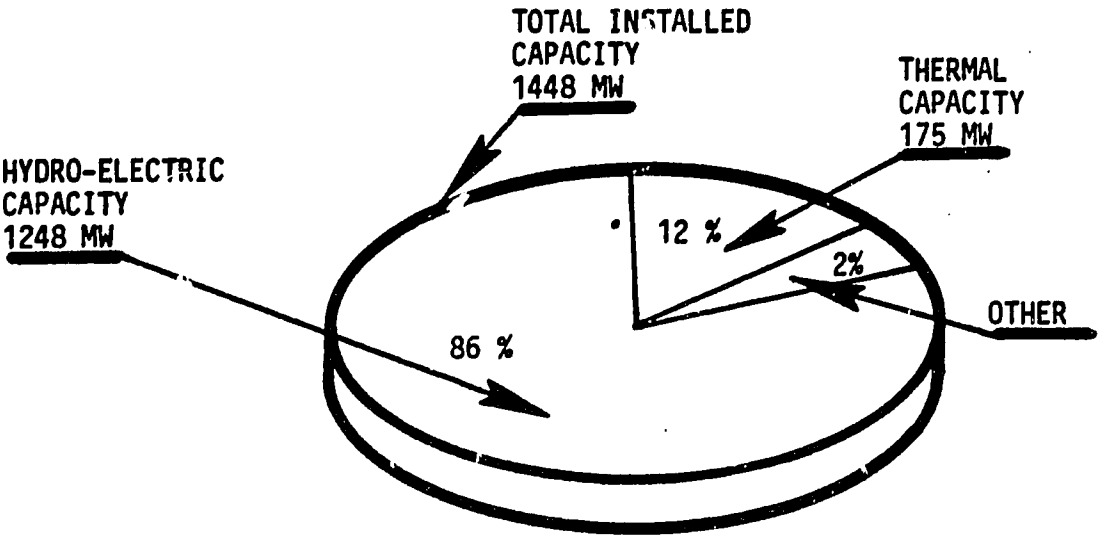

FIGURE 6.6

NATIONAL OUTLOOK OF GENERATING RESOURCE
MIX FOR SCENARIO#2
YEAR: 1994/95

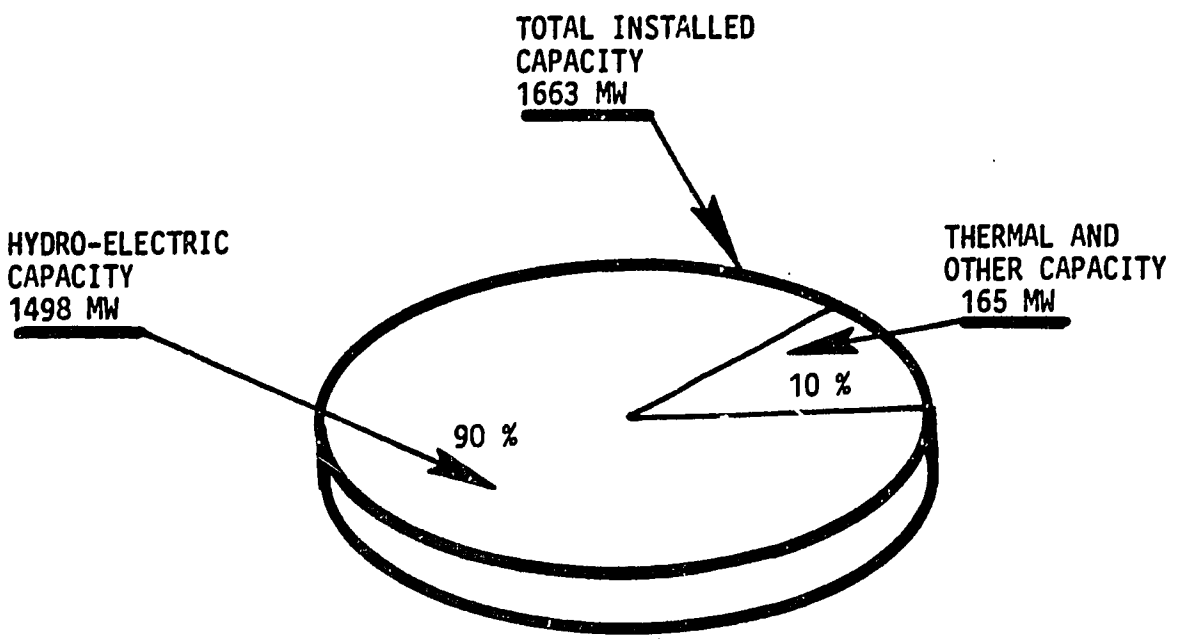

FIGURE 6.7

NATIONAL OUTLOOK OF GENERATING RESOURCE
MIX FOR SCENARIO#2
YEAR : 1999/2000

Table 6.5
National Outlook of Scenario #2
Without Energy Conservation
(Alternative Resources)

Year	Total Peak Demand	Installed Capacity	Reserve Margin MW	Reserve Margin %	Criteria
1984/85	404	422	18	4.4	25%
1990/91	736	884	148	20.0	25%
1994/95	1046	1448	402	38.0	25%
1999/2000	1527	1663	136	9.0	25%

Table 6.6

National Outlook of Scenario #2
with Energy Conservation

(Alternative Resources)

Year	Total Modified Peak Demand* (MW)	Installed Capacity (MW)	Reserve Margin MW	Reserve Margin %	Reserve Margin Criteria
1984/85	382	422	40	10.4	25%
1990/91	697	884	187	26.8	25%
1994/95	991	1448	457	46.1	25%
1999/2000	1454	1663	209	14.3	25%

* Five percent demand reduction in other areas is assumed.

6.5 DISCUSSION

The PEWC and the government share the responsibility of maintaining a reliable supply of electricity in Sudan. The utilities (BNG, EG, and other systems) are chartered to provide adequate service and it is the responsibility of the government to ensure that the reliable supply of electrical energy is maintained at a level consistent with the need for such energy.

To meet this responsibility, the utilities need either more generating capacity then their actual load of any particular instant or the ability to control loads to match the maximum capacity available. The capacity over and above actual system loads is characterized as "reserve margin". The more reserve maintained, the more expensive the cost of power delivered. These costs must be weighed against the costs of shortage. Failure to meet loads will mean inconvenience, economic loss, and in some cases, hazards to health.

This chapter discusses an "Alternative Resource" scenario for expedited development of the Merowe hydro-electric resource and other plan components that can serve the electricity requirements of Sudan in the 1990s and beyond.

The central elements of this alternative supply plan are construction of Merowe Site in three phases at 200 MW of capacity addition per phase, thermal capacity or oil-fired generation

reduction, and more efficient use of existing plants.

The emphasis in Scenario #2 is on a supply-focused electricity energy strategy, the main goal being to ensure an adequate level of supply to satisfy growing energy demand. For example, Scenario #2, by around the year 2000, requires 750 MW of hydro-electric capacity not yet even under preliminary planning stages. If hydro-electric resource development initiatives are not generated within the next two years, it is more than likely that these capacities will be oil-fired plants or that the demand will simply go unserved. In the 1990s, the PEWC will have system reliability lower than the present (1981) level and there will be regular power shortages.

In Table 6.7, the economic impacts of power shortages are included. The scope of this report did not allow for quantifying these direct and indirect costs of power outages for the PEWC service area. However, Table 6.8 illustrates the economic impacts of the New York City Blackout in 1977. The impacts of power shortages in the 1990s similarly can be determined for the PEWC service area based on population, customers diversity, income, housing characteristics, density, economic activities, and employment statistics.

Table 6.7

Economic Impact of Power Outages

Direct Impacts	Indirect Impacts
1. Business Losses	
- production time losses (duration of blackout)	- production time loss (results of the looting, etc.)
- damages to plant equipment	- damages to equipment
- inventory loss (food spoilage, etc.)	- inventory loss
	- security equipment installation expanse
	- backup power system costs
2. Government Losses	
City	
- transit revenue loss	- tax and transit revenues
- city tax revenue loss	- emergency aid
	- overtime payments
	- investigation and research costs
State	
- state tax revenue	- emergency aid
	- tax revenues
	- investigation and research costs
Federal	
- state tax revenue loss	- emergency aid
	- investigation and research costs
3. PEWC System	
- revenue loss	- capital expenses mandated
- overtime costs (for recovery)	- legal fees
- capital expenses for recovery	- investigation and research costs
	- potential effects on rates

Table 6.7 (Con't.)

Economic Impact of Power Outages

Direct Impacts	Indirect Impacts
4. Insurance	- unemployment - private property - business property and inventory - health
5. Public Health and Safety	
- food and medical specimen spoilage - hospital costs (supplies, operation of generators, etc.) - overtime costs - revenue costs	- increase patient load (results of the looting, etc.) - backup power system costs - new contingency plan costs
6. Public Services	
Fire	
	- overtime costs
Criminal Justice	
	- police overtime costs (state, local) - correction costs (short and long term) - court-related costs
Transit	
- revenue loss - equipment damage	- revenue loss - new equipment - backup power system costs
Utilities (non-electric)	
- revenue loss	- overtime (sanitation, water)

Table 6.8

Summary of Economic Impacts of 1977 New York City Blackout

Businesses	Food Spoilage	$ 1.0	Small Businesses	$155.4
	Wages Lost	5.0	Emergency Aid (private sector)	5.0
	Securities Industry	15.0		
	Banking Industry	13.0		
Government (Non-public services)			Federal Assistance Programs	11.5
			New York State Assistance Program	1.0
Consolidated Edison	Restoration Costs	10.0	New Capital Equipment (program and installation)	65.0
	Overtime Payments	2.0		
Insurance[2]			Federal Crime Insurance	3.5
			Fire Insurance	19.5
			Private Property and Insurance	10.5
Public Health Services			Public Hospitals--overtime, emergency room charges	1.5
Other Public Services	Metropolitan Transportation Authority (MTA) Revenue Losses	2.6	MTA Vandalism	.2
			MTA New Capital Equipment Required	11.0
			Red Cross	.01
	MTA Overtime and Unearned Wages	6.5	Fire Department overtime and damaged equipment	.5
			Police Department overtime	4.4
			State Courts overtime	.05
			Prosecution and correction	1.1
Westchester County	Food Spoilage	0.25[3]		
	Public Services equipment damage, overtime payments	0.19		
TOTALS		$55.34		$290.16

1 Estimate based on aggregate data collected as of May 1, 1978. See previous page for discussion of limitation of these costs.
2 Overlap with business losses might occur since some are recovered by insurance.
3 Looting was included in this estimate but reported to be minimal.

These data re derivative, and are neither comprehensive nor definitive.