PN-AAQ-953
ISN 36472

THE CONSEQUENCES OF SMALL RICE FARM MECHANIZATION PROJECT

Working Paper No. 98

THE SUSTAINABILITY OF MECHANIZATION IN THAILAND

AN 00
6715D

By

William J. Chancellor
Asian Institute of Technology
Bangkok, Thailand

1983

The Consequences of Small Rice Farm Mechanization Project is supported by the United States Agency for International Development under Contract tac-1466 and Grant No. ~~931-12026.01~~ 931-1026.01 and is being implemented by the International Rice Research Institute and the Agricultural Development Council, Inc.

The Sustainability of Mechanization in Thailand

by William J. Chancellor*

In countries where mechanization of agriculture has only recently been introduced, concerns frequently arise as to whether there will be sufficient technical capability and capacity to sustain the working ability of machines by effecting the needed repairs on an efficient basis. During the past 15 years, development of this technical capability in Thailand has been dynamic and has encompassed many unique features. The technical sustainability of machines on Thai farms has been marked by:

a) intensive and severe use of large tractors with a related high rate of repair requirements,

b) rapidly increasing numbers of small 2- and 4-wheel locally-made tractors of very simple design necessitating low repair requirements,

c) large flows and broad availability of new and used imported spare parts and a sizable local industry for spare parts manufacture, and

d) broadly distributed knowledge of mechanical repair techniques and the resulting availability of low-cost mechanical services at all hours of the day.

The number of farm tractors in use in Thailand is given in Table 1 below**.

Table 1

	1975	1981	Average Annual Increase
Two-wheel tractors	90,001	284,351	32,392
Small, four-wheel tractors	14,575	39,158	4,097
Large, four-wheel tractors	13,338	50,044	6,118
Total	117,914	373,553	42,607

Typically two or more drivers have been used per tractor, so that if operators were to be trained, the minimum number requiring training would be on the order of 85,000 per year. The demand for mechanics has been found to range from 38 percent of operator time for large, four-wheel tractors (Chancellor, 1970) to 17 percent of operator time for small two- and four-wheel tractors (Maranan et al., 1983). Operator time ranged from approximately 200 hours per year for the smaller units to about 1000 hours per year for the larger machines.

*Visiting Faculty Member, Division of Agricultural and Food Engineering, Asian Institute of Technology, P.O. Box 2754, Bangkok, Thailand.

**Data from Ministry of Agriculture and Cooperatives (1982).

Despite the rapidly increasing numbers of small tractors, the mechanical work performed by the large units still dominated the scene in 1981, as is shown in Table 2 below.

Table 2

Type of Tractor	Number	Typical Horsepower	Thousands of Hp Available	Typical Annual Hours	Millions of Hp-Hrs Annually
Two-wheel	284,351	8	2,275	200	455
Small four-wheel	39,158	16	627	400	251
Large four-wheel	50,044	60	3,003	1,000	3,003
Total			5,904		3,709

The large tractors have been mainly used in tillage of partially cleared upland areas using disc plows or disc tillers. These implements, when in these typically rough conditions, do not have their tail wheel continuously engaged with the soil. As a result, side-thrust shocks have been frequently applied to the hydraulic lift linkage of the tractor. Although most large tractors in Thailand have had this linkage reinforced, rapid wear and deformation has been common. Resistance to the side-thrust is generated by steering the front tractor wheels so as to compensate for the yawing torque applied. This has resulted in rapid wear and deterioration of the front axle and steering parts. The rough and partially cleared terrain has caused extensive tire damage. Frequently a carrying platform has been fastened to the front of the tractor, and in remote areas both fuel and grain have been commonly transported on this platform over rough terrain. This has imposed severe loads on the front axle assembly.

When these large tractors have been used in tilling rice fields, field borders were frequently crossed by driving the tractor into them at high speed. This also tended to overload the front axle. About 10 percent of the large tractors have been equipped with rotary tillers for rice-field and tobacco cultivation. Torsional shocks on the power-take-off system and axial thrusts on this system when lifting and lowering the rotary tiller has caused frequent failures in elements of the power-take-off drive train.

The large tractors have been primarily operated on a custom-hire basis in which very intensive use of the tractor occurred (engine operated at full power, and multiple drivers used to achieve 12 to 20 hour-per-day scheduling). Clutch failures have been common and general deterioration has been rapid for machines operated 240 or more hours per month. This intensive use has been resorted to in order that income per unit capital cost could be increased, since most large tractors have been sold on credit terms.

When local sales agents have competed severely for sales, they frequently have done so by reducing the amount of down payment required. In cases where the down payment was unusually low (20 percent or less of the purchase price) 24-hour-per-day operation of the tractor in combination with non-payment of purchase installments allowed buyers to make money even though the tractor was repossessed after 6 to 8 months. Tractors operated under these economic circumstances received a minimum of attention to maintenance.

With proper economic management of credit sales for large tractors, the local sales agents have been charged with assuring the credit-worthiness of buyers, and received most of their commission from the periodic payments of buyers. These agents were thus in a position to know when a tractor in custom-hire service has broken down (periodic payments don't arrive) but they were also in a position to stock spare parts and retain trained mechanics so that the tractor could be put back in working order. Distributors who held the credit contracts, also depended on the tractors continuing to operate, and they were in a position to import spare parts or to have them locally manufactured. Distributors also acted as a center for mechanic training. Thus, a properly designed and managed credit contract tended to keep all participants in the tractor custom-hire system focusing their attention, and the resources within their efficient command, on the sustained field performance of the tractors.

In an early survey (Chancellor, 1970) it was found that about 19 percent of the local sales agent's revenue was from spare parts sales. In 1982 the sales of spare parts for large tractors in Thailand amounted to approximately 500 million baht, or 10,000 baht per tractor per year.

Data from the above-mentioned study, and those from a study done in 1979 (Wattanutchariya, 1981) are presented in Tables 3 and 4, respectively to give some indication of the costs of repair and maintenance for large tractors operated in custom-hire service in Thailand.

Table 3*

Repair and Maintenance of 50-70 Hp Tractors (1968)

1. Tractors were disabled 26% of the time during the main work season.

2. Repair labor was 131 man-days (8 hrs) per year per tractor (38 percent of driver labor).

3. Repair cost breakdown:

A)	Mechanical repairs of tractor	48%
B)	Tire repairs for tractor	34%
C)	Mechanical repairs of implements	18%

4. Repair costs during any year =

(initial tractor price) x [2% + (4% x age in years)]

At 6.5 years of age, total repair costs = initial price

*Data from Chancellor (1970)

Table 4*

Operating Costs for 50-70 Hp Tractors (1979)

Total annual revenue per tractor	70,771 baht
Total annual cash costs	64,443
Annual repair and maintenance costs	21,548
Annual fuel costs	17,308
Annual driver wages	3,087

Repairs and maintenance = A) 123 baht/hectare
B) 1.25 x fuel costs
C) 30% of revenue

*Data from Wattanutchariya (1981)

The locally made small two- and four-wheel tractors have been produced by small-scale manufacturers, and distributed primarily in the local area surrounding the manufacturing firm. The designs (Fig. 1) used have been particularly simple and rugged. Mechanical components used were all commonly available in the local market. Certain key parts in some designs were made using used automotive parts, mostly imported from Japan. The two-wheel tractor, in particular, has been very low priced (5000 baht without engine in 1983) and suited to both the economic and physical conditions associated with rice production in Thailand. It was thus adapted to owner use and operation on small-scale farms, and consequently did not have to be operated a great number of hours annually to be economically feasible.

Fifteen years ago this two-wheel tractor was usually found equipped with an air-cooled gasoline engine. However, because of the fuel price increase and the greater efficiency of diesel engines, the current state of technical and economic knowledge among farmers in Thailand has allowed most buyers to now know the advantages of buying the tractor equipped with the more expensive (but longer-life) liquid-cooled diesel engine. These engines typically (in 1983) cost 2 to 3 times the price of the two-wheeled tractor chassis. The engines have been, therefore, used for water pumping, boat propulsion and for powering a locally made transport vehicle, when not used on the tractor. Thus the engine has been frequently operated many more hours each year than was the tractor. This was done to make more efficient use of the capital sunk in the engine.

Currently about 80 percent of these diesel engines sold in the country in 1983 were supplied by two local manufacturers licensed by Japanese companies. These manufacturers are scheduled to increase the percentage of local content in the engines each year.

Data for these locally-made tractors (Maranan et al., 1983) for the 1980-81 year indicated that repair costs were about 49 percent of fuel costs (as compared with the 125 percent of fuel costs for large tractors reported by Wattanutchariya, 1981). About 57 percent of the breakdowns reported by Maranan et al. (1983) were related to the engine. These figures point to the rugged-

ness of the simple design of these locally made tractors. For field work the two-wheel tractors have used steel wheels. The four-wheel units used retreaded truck tires. Old truck tires have been also used with the two-wheel units for road transport. The truck tire carcasses are very strong and thus resistant to the high incidence of tire problems found with larger tractors by Chancellor (1970).

Information on axial-flow type rice threshers during 1978 (Pathnopas, 1979) indicated that maintenance costs were about 130 percent of fuel costs, but only 12 percent of revenue (as opposed to 30 percent of revenue for large tractors) when these threshers were operated in the custom-hire mode.

Status and Development of Repair Skills

During he past 20 years the level of generally held knowledge on the maintenance and repair of motorized equipment has increased greatly in Thailand. An indication of this is that about half of the taxis in Bangkok are 20-year-old models. In the intervening years nearly all these cars have been fitted with replacement engines, with air-conditioners and with LP gas carburetion systems. This points to the capability of the local technical sector to respond rapidly to economic incentives.

Training in mechanical repair skills has for several years been in general demand. A number of technical schools have been offering this sort of training. The Ministry of Agriculture and Cooperatives has been operating training centers at three locations in Thailand at which a 110-day course in technical agriculture has for many years been offered to sons and daughters of members of farmers' associations. About 1,000 persons per year in the country have completed this course which emphasizes farm equipment selection, maintenance and repair, among other things. Chancellor (1970) found that persons who had completed this course were able to manage tractors with much reduced repair costs and with fewer problems than was the case for persons not having had any formal training. These trained persons were also found effective in training others who worked with them in tractor operation and management.

Despite the effectiveness of this training for the individuals involved, the 1,000 per year trained has been an insignificant fraction of the approximately 85,000 new tractor operators who have taken the controls of machines each year since 1975.

Distributors of large tractors have provided training for 100 to 150 mechanics each year. Because training has been focused on specific machines, considerable depth and detail has been achieved. The persons trained were those employed by local sales agents or those hired by the distributors as mobile service team members. In 1968 over 20 different brands of large tractors were being sold in Thailand. In 1983, three or four main brands dominated the market. Distributors surviving the competition were those providing strong support services in terms of mechanic training and spare-parts availability.

The two firms manufacturing diesel engines for agricultural use in the country have also been providing training courses for approximately 200 (total) mechanics per year. As with tractor distributors, these mechanics were employees of franchised sales agents, or were members of mobile service teams operated by the manufacturers.

Most of the mechanical services used by tractor owners were obtained from local workshops. Owners of small, locally-made tractors did about 30 percent of their own repairs and called on the local shops for about 60 percent Maranan et. al., 1983). For large tractors in 1968, Chancellor (1970) found that owners did about 40 percent of their own major repairs, local workshops did another 40 percent, and dealers and distributors were relied upon for about 20 percent.

Because a tractor or implement breakdown can be critical during the main working seasons, mechanics, workshops and tire repair shops were prepared to work during the night and on weekends and holidays. Despite the demand for mechanics' services, the rates of charge found by Maranan et al. (1983) averaged only about 12.5 baht per hour (slightly less than twice the official minimum wage for non-metropolitan areas).

The excellent state of road transport in Thailand aided greatly in the distribution of spare parts. These parts could be dispatched in the afternoon in response to a telephone or telegraph order, and reach the recipient the next day. Individuals could also use overnight bus transport to go to Bangkok to obtain the needed parts and return home within 24 hours. Larger tractor distributors had extensive networks of spare-parts sales agents. Local manufacturers frequently offered repair services in conjunction with their factory operations. These factory-related repair shops could easily make or substitute for any part of a machine they had produced.

In some few cases these manufacturers chose not to engage in the repair business, and thus attached a nameplate to the tractors produced which listed only the name of the wholesaler ordering the tractors. Such cases, however, appeared to be limited to the two-wheel tractor which was so common and so simple in construction that any well-equipped workshop could effect repairs.

Summary

In Thailand the technical sustainability of agricultural machinery systems has been marked by:

a) intensive use of large tractors with a minimum of attention given to prevention of machine deterioration,

b) locally manufactured small tractors of exceptionally simple and rugged design so that few complex repairs have been required,

c) an extensive general knowledge of machine repair techniques, a wide availability of low-cost machine repair services and a well-developed network of spare-parts supplies from import and domestic sources, so that repairs could be quickly effected, and

d) a remaining strong potential for the training of farm machine operators so that the economies of reduced machine breakdown could be realized on a more general basis.

References

1. Chancellor, W.J. 1970. Survey of tractor contractor operations in Thailand and Malaysia. Agricultural Engineering Department, University of California, Davis, California. 179 p., August.

2. Chancellor, W.J. 1971. The tractor contractor system in Southeast Asia, and the suitability of imported machinery. Agricultural Mechanization in Asia, p. 58-60, Spring.

3. Maranan, C., D. Shields and S. Sukharumana. 1983. The economics of mechanical land preparation: Evidence from Suphanburi Province. Workshop Paper, The Consequences of Small Rice Farm Mechanization in Thailand, Int. Rice Res. Inst., P.O. Box 933, Manila, Philippines. 29 p., November 10-11.

4. Ministry of Agriculture and Cooperatives. 1982. Agricultural Statistics of Thailand: Crop year 1981/82. Agricultural Statistics Publication No. 168, Center for Agricultural Statistics, Office of Agricultural Economics, Ministry of Agriculture and Cooperatives, Bangkok, Thailand. 226 p.

5. Pathnopas, Renu. 1979. The economics of rice threshing machines in Thailand: A case study of Chachoengsao and Supanburi Provinces. Working Paper No. 2, The Consequences of Small Rice Farm Mechanization Project, Int. Rice. Res. Inst., P.O. Box 933, Manila, Philippines. October.

6. Wattanutchariya, Sarun. 1981. Economic analysis of the farm machinery industry and tractor contractor business in Thailand. Working Paper No. 47, The Consequences of Small Rice Farm Mechanization Project, Int. Rice. Res. Inst., P.O. Box 933, Manila, Philippines. 19 p., September.

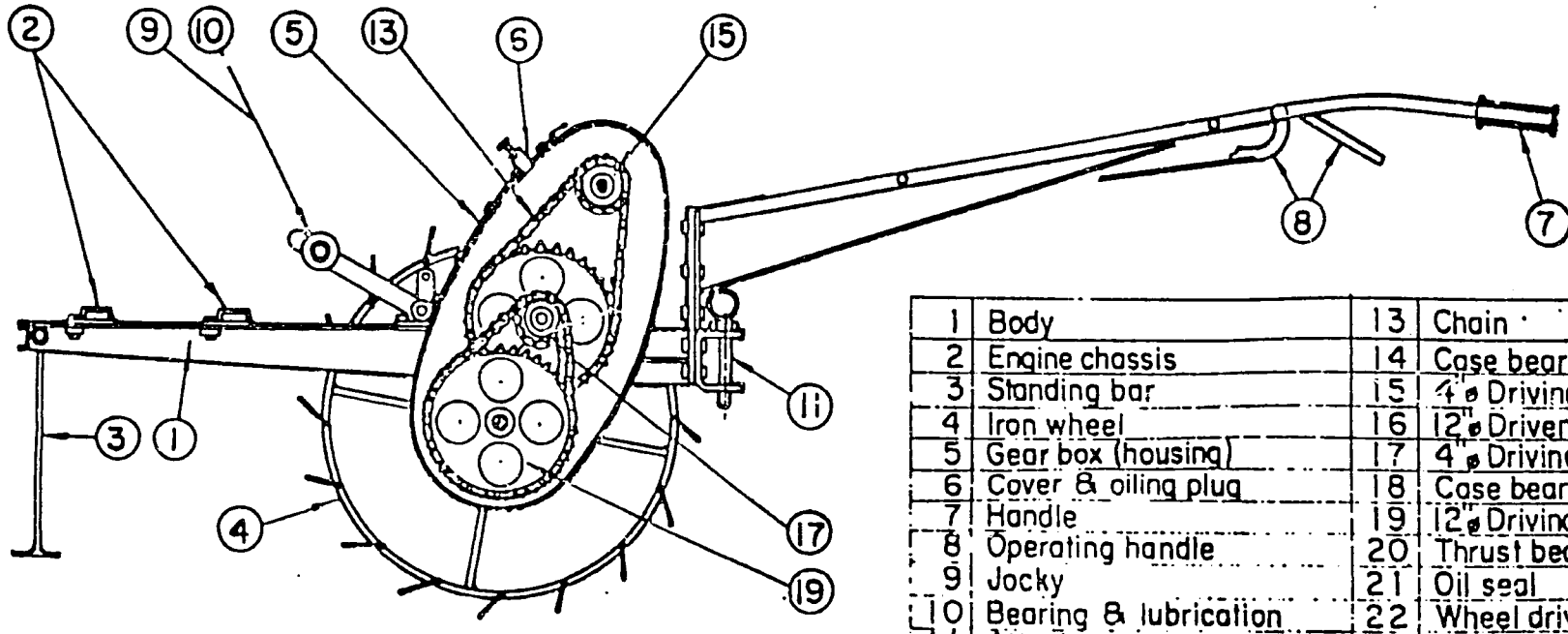

SECTION A-A SIDE VIEW

1	Body	13	Chain
2	Engine chassis	14	Case bearing & housing
3	Standing bar	15	4" ø Driving sprocket
4	Iron wheel	16	12" ø Driven sprocket
5	Gear box (housing)	17	4" ø Driving sprocket
6	Cover & oiling plug	18	Case bearing housing
7	Handle	19	12" ø Driving sprocket
8	Operating handle	20	Thrust bearing housing
9	Jocky	21	Oil seal
10	Bearing & lubrication	22	Wheel drive shaft coupling
11	Attaching pin	23	Locking nut
12	12" ø Pulley, double V-belts		

THAI POWER TILLER

SCALE: 1/8: 1 INCH 6-21-'74

Figure 1. Cross-sectional view of the two-wheeled tractor chassis manufactured by numerous small-scale factories in Thailand. The figure is taken from: Pinthong, Chirmsak, 1974. Economics of small tractor production in Thailand. Master of Economics thesis, Thammasart University, Bangkok, Thailand.