PN-AAQ-790/67
ISN = 2612 S

WATER AND SANITATION FOR HEALTH PROJECT

WASH

COORDINATION AND INFORMATION CENTER

Operated by CDM FIVE for the U.S. Agency for International Development

A WORKSHOP DESIGN FOR SPRING CAPPING

A TRAINING GUIDE

WASH TECHNICAL REPORT NO. 28

1611 N. Kent Street, Room 1002
Arlington, Virginia 22209 USA

Telephone: (703) 243-8200
Telex No. WUI 64552
Cable Address WASHAID

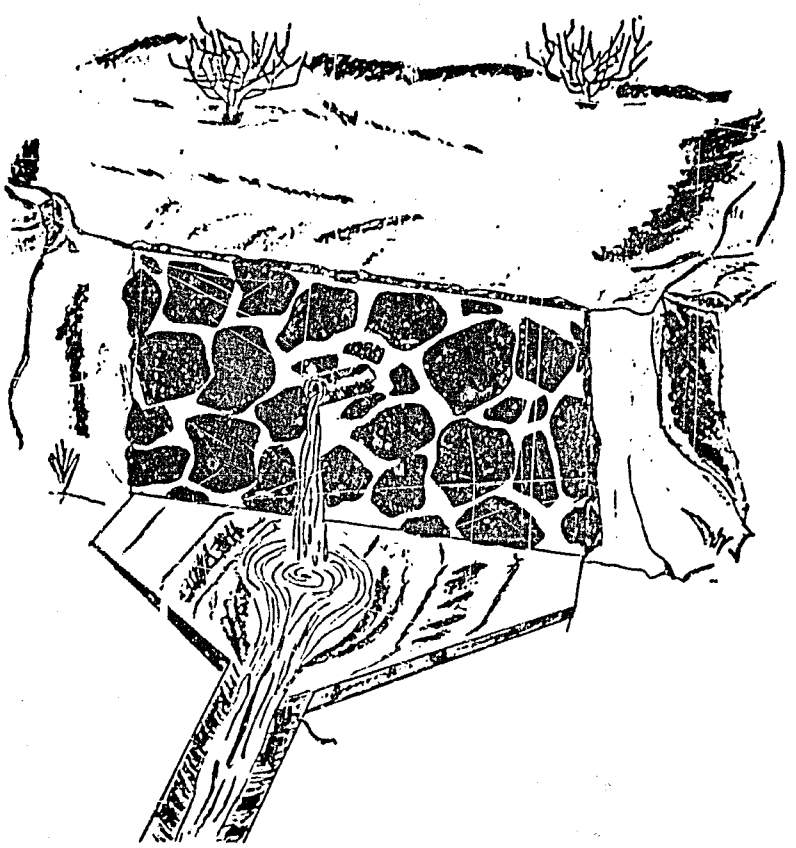

CDM FIVE is organized by Camp, Dresser and McKee Incorporated. Principal Collaborators: Center for Educational Development in Health, Boston University; International Science and Technology Institute; Research Triangle Institute; University of North Carolina at Chapel Hill.

1865

Prepared for:
Office of Health
Bureau for Science and Technology
Agency for International Development
OTD No. 154

B-459

MEMORANDUM

TO: Colleagues

FROM: Fred Rosensweig, WASH Associate Director/Human Resource Development Fred Rosensweig

SUBJECT: WASH Training Guides

I am pleased to provide you with this WASH Training Guide. WASH has recently completed four training guides for use in rural water supply and sanitation projects. The subjects of the four training guides are latrine construction, handpump installation and maintenance, rainwater roof catchment, and spring capping.

A flyer which provides an overview of the four training guides is also enclosed. We would be interested in any comments on the training guides, particularly after using them to run workshops in the field.

WATER AND SANITATION
FOR HEALTH PROJECT

WASH Training Guides

The Water and Sanitation for Health (WASH) Project has developed four training guides for use in rural water supply and sanitation projects in developing countries. These guides have been developed in response to two problems: (1) the barrier to effective training presented by the lack of well designed training materials and (2) the high cost of preparing and producing effective training materials. The net result of these problems is that most training programs are not carefully planned and do not achieve their intended outcomes.

Well-crafted training guides are now available which not only meet an immediate need but can also serve as a model for developing materials in the future. These training guides are the following:

- *A Workshop Design for Latrine Construction*—Technical Report No. 25
- *A Workshop Design for Handpump Installation and Maintenance*—Technical Report No. 26
- *A Workshop Design for Rainwater Roof Catchment*—Technical Report No. 27
- *A Workshop Design for Spring Capping*—Technical Report No. 28

These four technologies were chosen because of their widespread applicability, because of their relevance to nontechnical as well as technical field personnel, because they lend themselves to skill transfer within relatively short timeframes, and because they are in frequent demand.

Description of the Training Guides

The training guides contain all the information a trainer needs to plan and conduct a comprehensive workshop, including training designs, trainer guidelines, participant handouts, and trainer reference materials. The guides were developed for trainers to use in training fieldworkers with responsibility for rural water supply and sanitation. These fieldworkers include health promoters, nurses, rural development workers, and health assistants. Each workshop is designed to take about two weeks, the maximum amount of time that field personnel can realistically be away from their posts. The guides are divided into sessions which range from an hour to seven hours in duration. Each training guide contains a participant reference packet, which is a regrouping of the handouts found at the end

of each session. This packet can be easily duplicated for participants to take away from the workshop.

Courses have been designed so that all the sessions should be used in their numbered sequence. Each training guide, however, is flexible enough for the trainer to select only certain sessions, depending on the role and job responsibilities of the participants. When using a selected number of sessions, minor modifications will have to be made to maintain the coherence of the training design.

Approach

The training methodology used is highly participatory, based on well proven methods for training adults that combine practice in actual construction with case studies, large and small group discussions, role plays, field tasks, and presentations of technical content. Each workshop includes a construction project and uses both the classroom and the construction site during the training.

Each training guide is organized around the steps of a project cycle—preplanning and assessment, planning and design, construction, maintenance and repair, and evaluation. As a result, the participants learn not only the technical but also the planning and community development skills critical to a successful rural water supply and sanitation project.

The workshop is designed for a rural setting so that the participants carry out field tasks in a community similar to those they normally work with. This adds an important measure of reality to the workshop that could not be achieved in an urban setting. Sophisticated training facilities are not called for. In fact, only a large meeting room and adequate facilities for lodging and food are essential.

Training Staff

These workshops ideally require a training staff with three types of skills and experience:

1. Expertise in the technology
2. Experience conducting participatory training
3. Skills in working collaboratively with communities

The workshops should be conducted by two trainers (assuming 11-20 participants), one a technical and the other a training specialist. There are, however, other ways to organize the training team, as long as both training and technical skills are present. Technical expertise alone is not enough to make effective use of these guides.

Prerequisites to Using the Training Guides

There are certain prerequisites for use of these training materials:

- A water supply and sanitation *project* or component of a primary

health care or agricultural project in which the skills learned in the workshop n be used.

- *Trainers* representing a mix of training and technical skills.
- A *training site* with adequate classroom and living facilities and close access to an appropriate place for the construction.
- *Management capability* to plan and monitor the training program, including ordering materials, finding and preparing the training site, identifying the participants, arranging transport, and selecting the trainers.
- *Participants* who can be away from their jobs for approximately two weeks.

Use of the Training Guides

These materials will be useful to many different organizations including national ministries or agencies, international and bilateral agencies, volunteer organizations such as the U.S. Peace Corps, local contractors, and private voluntary organizations. These organizations can use the training guides to introduce a new technology to a project, improve technical skills of project field staff, establish a rural water supply and sanitation curriculum, or develop other materials using these guides as a model.

The Technologies

Latrine Construction - Technical Report No. 25

The purpose of this course is to build skills in assisting communities in the planning and implementation of latrine projects. The workshop deals with how to help communities make informed choices and plan and implement latrine projects appropriate to their resources and needs. All participants construct a ventilated improved single pit latrine with a concrete base and slab and a locally appropriate shelter. Although the Ventilated Improved Pit latrine is the type chosen, the guide can be easily adapted to use with other latrine designs. There is an appendix with instructions for adapting the basic course for use with a mud and wattle latrine.

Handpump Installation and Maintenance - Technical Report No. 26

This course is concerned with building skills in both the technical and community development aspects of community-based handpump projects. The materials are applicable for both bore holes and hand dug wells and adaptable to any model and type of handpump. The AID handpump was selected as the model for the technical sessions because it is a basic reciprocating, single-acting pump, similar to most handpumps in use today, and because it is available for both deep and shallow wells. Specific adaptations are also included for the India Mark II pump.

Rainwater Roof Catchment - Technical Report No. 27

The purpose of this course is to provide systematic skill development for local project staff in the steps and techniques for planning and implementing a rainwater roof catchment system. Participants are trained to construct medium and small volume cisterns and hang gutters for community buildings such as schools and health clinics. Options are provided for the use of reinforced concrete, brick, and ferrocement for the cisterns. The workshop design can be adapted to cisterns above ground, partially above ground, and below ground. Participants also learn to make cement water jars for individual household use and catch water off a thatched roof.

Spring Capping - Technical Report No. 28

The purpose of this course is to provide participants with the skills and knowledge needed for assisting communities to organize, implement, and maintain a spring capping system. The workshop uses the retaining wall as the type of spring improvement system since these structures are relatively easy to construct and since many of the basic skills required are the same as for other spring capping systems. The training guide also contains a supplement which adapts the guide for use with a spring box design.

For more information or copies of the training guides, please write the WASH Information Director, Room 1002, 1611 North Kent Street, Arlington, Virginia 22209, U.S.A.

The Water and Sanitation for Health Project has been in operation since September 1980. WASH is managed by Camp Dresser & McKee Inc. in conjunction with the International Science and Technology Institute, the Research Triangle Institute, and the University of North Carolina through a contract with the United States Agency for International Development (Project No. AID/DSPE-0080).

WASH provides services to USAID missions initiated through requests by AID field projects, host country institutions, private voluntary agencies, and multilateral agencies. To date, WASH services have extended to over 50 countries.

4

WASH TECHNICAL REPORT NO. 28

A WORKSHOP DESIGN FOR SPRING CAPPING

A TRAINING GUIDE

Prepared for the Office of Health, Bureau for Science and Technology
Agency for International Development
under Order of Technical Direction No. 154

Prepared by:

Wilma Gormley
David Goff
Carl Johnson

September 1984

Water and Sanitation for Health Project
Contract No. AID/DSPE-C-0080, Project No. 931-1176
is sponsored by the Office of Health, Bureau for Science and Technology
U.S. Agency for International Development
Washington, DC 20523

5

TABLE OF CONTENTS

Page

1. INTRODUCTION TO THE TRAINING GUIDE

1.1 Needs Addressed by the Training 1

1.2 Overall Workshop Goals 1

1.3 Trainers 2

1.4 Approach to Training 2

1.5 Organization of the Training Guide 3

1.5.1 Trainer Guidelines 3
1.5.2 Prepared Materials for Trainees 4

1.6 Workshop Content and Methodology 4

1.6.1 Assumptions and Beliefs 4
1.6.2 The Predominant Spring Capping Technology in This Course 5
1.6.3 Spring Capping Training Project 5
1.6.4 Common Workshop Methods 6
1.6.5 Planning for Back-Home Application 7

1.7 Planning for the Training Program 7

1.7.1 Selecting the Village 8
1.7.2 Working with the Village 8
1.7.3 Selecting a Spring for Capping 8
1.7.4 Preparing for the Spring Capping Activities 9
1.7.5 Preparing Trainee Materials 11
1.7.6 Securing Workshop Facilities 11
1.7.7 Adapting the Session Sequence 11
1.7.8 Preparing the Staff to Conduct the Training Program. 14
1.7.9 Workshop Check List and Time Table 14

1.8 Task Analysis. 15

1.9 Workshop Schedule 16

1.10 Adapting This Workshop for Other Predominant Spring Capping Systems 17

2. THE TRAINING SESSIONS

Session 1: Workshop Introduction 19

Session 2: Introduction to Spring Development. 31

Page

Session 3: Skills Assessment for Spring Development Technologies 59

Session 4: Village Survey Methods and Data Collection for Spring Site Selection 67

Session 5: Preparation for Spring Development Construction Activities 85

Session 6: Layout and Excavation 109

Session 7: Form Building and Reinforcement 121

Session 8: Constructing the Foundation 139

Session 9: Installation of Spring Retaining Wall and Pipe. 161

Session 10: Community Selection and Decision Making 171

Session 11: Community Involvement: Organizing the Community to Participate 177

Session 12: Use, Maintenance, and Repair 185

Session 13: Education for Spring Users 197

Session 14: Spring Site Completion 205

Session 15: Planning for Spring Capping Projects 219

Session 16: Evaluating the Demonstration Spring Capping Project 225

Session 17: Alternative Spring Development Technologies 231

Session 18: Planning Your First Spring Capping Project 285

Session 19: Workshop Evaluation 293

Session 20: Mid-Course Evaluation (Optional) 301

Appendix 1 SPRING BOX SUPPLEMENT 307

Appendix 2 PARTICIPANT REFERENCE PACKET

HANDOUTS

Page

Handouts

1-1: Overall Workshop Goals 27
1-2: Workshop Schedule 29

2-1: Three Types of Springs 39
2-2: The Water Cycle in Nature 41
2-3: Spring Capping Project Cycle. 47
2-4: Task Analysis for Field Workers Who Manage Spring Capping Projects 49
2-5: Planning Guides for Your Spring Capping Projects 53

3-1: Self-Assessment of Skills Necessary for Implementing Spring Development Technologies 63

4-1: Lecturette Notes: Selecting a Spring for Capping. 77
4-2: Sanitary Survey Form 79
4-3: Sanitary Survey 81
4-4: Flow-Measuring Techniques 83

5-1: Photographs of Stages of Spring Development 95
5-2: Retaining Wall Structure 99
5-3: Dimensions for Foundation and Retaining Wall 101
5-4: Reinforcement Rods in Foundation 103
5-5: Materials and System Components 105
5-6: Quantities of Materials Required for an Average Size Retaining Wall Structure 107

6-1: Drainage Canals 117
6-2: Lecturette Notes: Layout and Excavation of the Spring Site 119

7-1: Wooden Forms for Concrete Foundation 131
7-2: Lecturette Notes: Constructing the Foundation. 133
7-3: Splash Pad and Spring Flow Drainage Ditch 137

8-1: Cement, Concrete, and Masonry 147

9-1: Lecturette Notes: Retaining Wall Construction 169

11-1: Case Study 183

12-1: Examples of Spring Malfunction 193
12-2: Common Repair Strategies 195

13-1: User Training Session Topics 203

14-1: Lecturette Notes: Closing the Spring 213
14-2: Completed Spring Showing Earth Cover 217

Page

15-1: Three Planning Tasks 223

16-1: Checklist for Evaluating a Spring Capping Project 227

17-1: Designing Structures for Springs 237
17-2: Constructing Structures for Springs 247
17-3: Maintaining Structures for Springs 257
17-4: Spring Box System 261
17-5: Seepage Collection System 273
17-6: Storage Tank 277
17-7: Two Spring Capping Situations 283

18-1: Work Plan Chart 291

19-1: Evaluation Form - Spring Capping 297

ACKNOWLEDGEMENTS

Many people contributed to the design, substance, and production of this training guide. Lee Jennings, WASH training consultant, and David Goff, one of the authors, piloted the training guide in Togo. Based on the pilot test, substantial revisions were made. In addition, Carl Johnson of Camp Dresser and McKee carefully reviewed the revised version and made valuable suggestions for improving the technical aspects. Fred Rosensweig, in addition to his overall management of the task, reviewed the guide from a training standpoint and helped revise several sessions. Finally, the document benefitted greatly from the teams that wrote the other three training guides. Ideas were shared and sessions were reviewed by all the teams.

A number of people were instrumental in producing the training guide. Barbara Furst and Diane Bendahmane edited and proofed the final version. Linda Edwards played an important role in proofing and in acting as an intermediary between the word processor and the authors. Johnny Palmer did most of the graphics for the final product and Deirdre Zitek had overall responsibility for coordinating the editing and production.

1. INTRODUCTION TO THE TRAINING GUIDE

1.1 Needs Addressed by the Training

The purpose of this training workshop is to provide participants with the needed skills and knowledge for assisting rural communities to organize, implement, and maintain spring capping projects. Therefore, planning, constructing, and maintaining retaining walls for springs is the central theme of this training. This training guide is for trainers who will conduct the workshop. It is not for participants although it contains materials which will be handed out to them.

The workshop is for participants who work in rural settings with local communities which want to improve their spring water supply, and as such it is designed for individuals without prior technical skills or knowledge needed to plan and construct spring capping improvements. It is designed to provide sufficient understanding and skills in the planning and construction of spring capping retaining wall systems to enable participants to implement these spring improvement programs.

This training program is appropriate for project promoters, field workers, rural development specialists, and others involved in the promotion of improved water supply. They may be ministry staff, extension workers, Peace Corps volunteers or any other individuals responsible for and interested in working for improved community water supplies.

The training guide focuses on retaining wall systems and contains a supplement for adapting it to spring boxes.

1.2 Overall Workshop Goals

During the workshop a balance is struck between the technical skills needed to improve a spring and the community development skills needed to mobilize communities to assume responsibility for their water improvement programs. In the course participants will be involved in the planning and construction of a spring capping system in the local community. They will participate in all phases of this project. At the same time, they will be learning effective methods of involving communities in planning and implementing spring improvement projects.

At the end of this workshop, trainees will be able to:

- Identify resources necessary to complete a village spring capping project
- Communicate with village leaders and promote activities needed for project implementation
- Identify and apply strategies for involving the community in spring capping activities
- Survey and evaluate sites for potential spring capping
- Communicate and apply relevant theories about water and its relationship to environment and health

- Develop and implement work plans and logistics necessary for project start-up
- Coordinate and supervise work force and delivery of materials
- Design and build a retaining wall for capping springs
- Describe three alternative spring capping systems: the spring box, seepage collection, and storage tank systems
- Use, maintain, troubleshoot, and repair retaining wall spring capping systems
- Identify strategies for solving the most common problems which develop while building spring capping retaining walls
- Evaluate a spring capping project and document and record information gathered for future use
- Develop action plans for implementing spring capping projects in their regular work environments

1.3 Trainers

The course is designed to be conducted by a team of two trainers for 11 to 20 trainees. One trainer should be skilled in community-level project promotion and training and the other in the construction of spring improvement. These two trainers are responsible for delivering the training sessions both in the workshop and at the training project site. These two trainers should have:

- A secondary level (or more) education
- Prior training experience
- Extensive experience constructing spring capping systems
- Previous experience in community development activities

This training workshop could be delivered by one trainer if there were ten participants or less. This trainer, however, would need technical, training, and community development skills.

1.4 Approach to Training

This training program is based on the belief that the knowledge and skills required by those implementing spring development projects involve both:

- The technical areas including spring selection, construction of spring capping structure, operation, maintenance, and repair
- Community development skills including facilitating village mobilization and decision-making, problem-solving, health education, etc.

The content of the program reflects both these skill and knowledge areas. The content is organized around the natural flow and sequence of activities that are

required to complete a spring capping retaining wall project. These activities and their sequence are described in the project cycle, which is described in Session 2.

The training program design is based on the belief that people can best learn how to implement spring capping projects from training experiences that include both classroom theory and discussion and "hands-on" application of this theory in an actual work setting. Therefore, the course is designed around an actual spring capping project. Trainees spend time in both workshop sessions dealing with the theory about how springs are capped and sessions in the field at the project site where they actually perform the activities required to cap the spring and build the retaining wall. In this way the community itself and its spring development project become an integral part of the training course.

Since this course requires trainees to become involved in and learn from actually working on a project and have a good deal of access to the trainers throughout the course, the number of participants should be kept small. The optimum number of participants is 16 to 18. Twenty to 22 could be handled, but with difficulty, and anything over 20 would seriously limit the workshop's effectiveness. The training staff should include two trainers, a project or site supervisor, and an appropriate size labor force. The trainers conduct the training sessions. The project supervisor oversees the project and supervises the village labor force, and the village work force performs much of the repetitive labor required for project completion.

Villager participation as trainees in the program is welcomed and encouraged. This will increase the village's involvement in the spring capping project, provide training for the villagers, and introduce ideas into the workshop that come from the users themselves. Key villagers are the guardians and members of the water committee.

1.5 Organization of the Training Guide

This workshop is divided into 19 training sessions, each session covering a specific topic. A training session may be as short as two hours or as long as eight hours. Most require a half day or a full day, depending on the nature of the topic. The times given for each session are approximate and do not include lunch.

1.5.1 Trainer Guidelines

Trainer guidelines are written for each training session. These are intended to provide the training staff with detailed instructions on how to deliver the session. Specifically these guidelines include:

- Session objectives
- An overview of the session: what is contained in the session and why it is important
- Detailed instructions for conducting the training activities included in the session (i.e. lecturettes on theory input, interactive group discussions, role plays, field activities, etc.)

- A time frame indicating how long each part of the session should take
- Lists of materials needed for conducting the session
- Handouts to distribute to the trainees
- Trainer notes which explain alternative approaches or elaborations on instructions

This guide is intended to help the training staff organize and deliver this training program. However, the guide assumes the training staff has the technical expertise (experience with reinforced concrete and stone mortar construction) for capping springs as well as the skills necessary for conducting participatory, interactive workshops.

1.5.2 Prepared Materials for Trainees

The materials that are to be distributed to trainees follow the trainer guidelines for each training session in the guide. These materials can be taken out of the guide and copied for distribution to trainees and then replaced in the training guide for the next time the course is given.

Participants should be provided with a notebook in which to keep their materials. This is called their Project Guide. This notebook/project guide should have at least five dividers, one labeled for each phase of the project cycle. The trainees can put the appropriate materials along with their own notes in the proper section of the guide, and it should then serve as their guide for implementing spring capping projects.

The trainer can choose to distribute materials in one of two ways. One is to distribute the handouts at the time they are covered in the training session. (The trainee reads or works with them and then inserts them into his/her Project Guide.) Another method is for the training staff to assemble all the handouts and put them into the Project Guides prior to the workshop. Thus, on Day One, the Project Guides with handouts for the entire course already assembled are distributed to the participants. Both methods work effectively, and the training staff should choose the method they prefer.

1.6 Workshop Content and Methodology

1.6.1 Assumptions and Beliefs

This training program and the methodologies it uses are based on the following assumptions and beliefs:

- A successful spring capping project is one that is village based, that is managed effectively over time by the village itself with a minimum of dependence on outside expertise, and that results in safe drinking water for the majority of the village population.
- Individuals involved in community extension work can learn the technical skills required to implement spring capping projects.

- Knowledge and skills needed to implement spring development activities involve technical skill, skill in community work, and skill at project management.

- Necessary spring capping knowledge and skills can best be acquired through a balance of technical theory and practical hands-on application.

- Adults learn best when they are actively involved in the learning process—doing things, discussing, analyzing, and experimenting, rather than as passive listeners in lectures or other trainer-centered activities.

- Workshop participants learn from each other as well as from the trainers, so learning experiences should involve small groups who work together on workshop activities.

- Participants will be far better prepared to cap springs back in their home environment if adequate workshop time is devoted to planning for their first spring capping project.

1.6.2 The Predominant Spring Capping Technology in This Course

It is beyond the scope of any one 12-day workshop to train participants to be skilled in the design and construction of all major spring improvement systems. This course focuses on one, the retaining wall, as the system to learn first for the following reasons:

- Sloped springs where retaining walls are an appropriate improvement are common in most locations.

- Retaining wall structures are simple and relatively easy to construct. They can be made from locally available materials and they are inexpensive.

- Many of the basic skills needed to construct a retaining wall are the same, with variations, as required for other spring capping systems.

The course will help the participants to become familiar with spring box and seep systems by discussing these alternatives, but in the course they will actually build a retaining wall.

The supplement adapts the training guide for use with a spring box design. This would allow trainers to conduct a workshop for spring boxes instead of retaining walls. If both systems were to be constructed, a workshop longer than two weeks would be necessary.

1.6.3 Spring Capping Training Project

The spring capping training project has two purposes: 1) To provide a laboratory for learning which simulates actual issues trainees will face in implementing spring capping projects, and 2) to cap a spring for a village and leave an improved, functioning water source for the community.

In order to accomplish both the above purposes, the project and the workshop are connected and interdependent in the following ways:

- Trainees actually work on the project.

- Project activities are planned so they occur at the appropriate time to fit into the course schedule.

- To the extent possible, workshop topics are scheduled to fit into the natural sequence of project completion. Many sessions begin in the classroom, move to the field, and are completed back in the classroom.

- The training staff is responsible for conducting the training program and for completing the project.

- The labor force is available to supplement the labor the trainees provide. For example, trainees would lay out and plan the diversion ditches and begin the digging. When the opportunities for learning have been exhausted and only the digging remains, the trainees move to another training session and the labor force completes the digging.

In order for the workshop and the project to proceed together hand-in-hand, the following are important areas for thought and planning:

- The training team must work <u>together</u> to plan and deliver the <u>course</u> and complete the <u>project</u>.

- The community should be involved in helping create a training project. The labor force should be considered a part of the training team, not hired hands to do the excess hard work.

- Time must be planned and managed carefully so the workshop and the project can evolve together.

1.6.4 Common Workshop Methods

Since this workshop is designed on principles of adult learning and experiential methodologies, some of the common workshop activities are:

- Lecturettes/Discussions (short trainer-led presentations and discussions)
- Demonstrations
- Large group discussions
- Small group work tasks
- Role plays
- Simulations
- Case studies
- Critical incidents (problems)
- Questionnaires
- Individual reading and reflecting

All methods are designed to put the learner in the active role--doing tasks, solving problems, working with others to plan activities, developing strategies, and trying things out. Trainees are active both as individuals and as members of a working group.

The trainer's role is to plan and carry out these trainee-centered learning activities, to act as a catalyst, to facilitate discussions, and to provide the technical expertise needed for learning how to cap a spring.

1.6.5 Planning for Back-Home Application

Trainees will be far better prepared to cap their first spring back home if workshop time is spent on preparing for it. Therefore, approximately fifteen minutes toward the end of each session is devoted to participants' planning how the content of that session can be integrated into a total plan for their first capping experience.

This application/planning activity is augmented by the use of the Planning Guides (explained more fully in Session 2). By answering the questions in this Planning Guide, the participants are able to reflect and record their learnings from the day's experiences and begin to think through how this learning can be applied to their first spring capping projects.

This reflective planning time is vital to the learning process. It helps insure that the trainees organize and record their new knowledge and skills in ways that minimize the chance of forgetting or losing the new information. Trainers should never neglect this activity. Since the activity is frequently at the end of the day, where time overruns finally catch up with the trainer, the training staff will have to make a special effort to see that this reflection and planning time is not left out. On especially busy days, the trainer might want to reconvene the group for a planning and reflective session after the evening meal.

Session 18, Planning for Your First Spring Capping Project, is the trainees' final opportunity to prepare for their own project. This session reviews the management, planning, organizing, and coordinating skills needed to implement a project—as well as the newly acquired technical skills. This three-hour session, along with the daily Planning Guides should enable the trainees to leave the workshop feeling secure in their ability to cap a spring and eager and enthusiastic to get started.

1.7 Planning for the Training Program

Conducting a 12-day training program, capping a spring, and coordinating the two effectively for maximum learning is no small task. Obviously, the planning and preparation for this event will have to be given a good deal of attention. This planning and preparation could be divided into six categories:

- Selecting an appropriate village in which to hold the training program
- Working with the villagers to obtain their participation and assistance
- Selecting a spring to cap
- Preparing for the spring capping activities
- Selecting and preparing the workshop facilities

- Preparing trainee materials
- Preparing the staff to deliver the training program

1.7.1 Selecting the Village

Obviously, the village in which to conduct this training program must be chosen carefully. The following are some points that ought to be considered in making this choice:

- Ease of transport into and out of village for traveling participants and staff
- Availability and variety of springs necessary for the course
- Availability of workshop facilities not too far from springs
- Living facilities for participants
- Labor force available and able to work on spring capping project
- Village interested in and committed to having a spring improved
- Village willing to help and cooperate
- Village interested in "hosting" a training program

1.7.2 Working with the Village

Once the village has been chosen, the training staff must begin to do the work needed to involve the village in the training program. The following are examples of what might be important in this area:

- Communicating with village leaders and involving them in appropriate decision-making
- Working with existing village health committee
- Securing the labor force, which should consist of one mason and three to five laborers
- Working with villagers to "host" the training program
- Making necessary financial agreements
- Planning for ceremonies according to local customs (i.e. course opening and/or closing and dedicating the capped spring)

1.7.3 Selecting a Spring for Capping

A spring must be chosen which would fit all the criteria for capping a spring using a retaining wall. These criteria are described in Session 4. The spring site must also fit the criteria for being useful as a training site, namely, not too far from the workshop site and in as comfortable a setting as possible.

1.7.4 Preparing for the Spring Capping Activities

The preliminary activities necessary before project start-up must be planned and carried out. Among these are:

- Preparing the site for construction activities
- Ordering tools and materials
- Arranging for storage of tools and materials
- Arranging for transportation of materials
- Hiring a construction supervisor
- Hiring and preparing the labor force (i.e., preparing village masons to mix concrete and mortar appropriately)
- Arranging financing

Construction materials include those that must be brought some distance to the site and those that are locally available. It will probably not be economical to bring sand, gravel, and rock but it will probably be necessary to transport cement, reinforcing bar, pipe and tools.

There will probably be substantial logistical considerations in procuring, transporting, and storing the construction materials. The total weight of the materials will probably exceed 1,000 kg.

Supplies and tools must be ordered. The following is a detailed list of the items required for capping a spring:

<u>Supplies</u>

Cement	10-20 sacks, 50 kg, top grade, dry and powdery
Sand, clean (uniform)	1-2 cubic meters
Broken stone (1 cm diameter)	1-2 cubic meters
Rock, clean	1-3 cubic meters
Reinforcement rods (rebar)	4-6, 6 mm rods at 6 m in length or 25 m total length
Wrapping wire	5-10 meters of 3 or 5 mm flexible wrapping wire
Pipe and appurtenances	50 mm diameter galvanized iron pipe 1 m threaded at one end (outlet pipe) 0.7 m threaded at one end (drain pipe)
Intake screen with flanged connections	

Plug for drain pipe	
Plastic	1 roll of thick plastic sheeting, 1 m wide x 5 m long
Chlorine bleach	2 gal. or 10 liters
Sturdy rope or cord	1 roll 1-2 cm thick
Clay	Locate a source for good quality clay as close to the site as possible. (Quantity varies)
Wood for forms and mixing board	Locally available lumber

Labor

1-2 masons

3-5 laborers

Tools

2 spades for digging

1 rake

Trowels (1 for every two participants)

3 wooden paddles

1 pick axe

1 crowbar

2 saws for cutting forms

1 hacksaw or wire snipper

2 hammers

2 boxes of flat headed nails for building forms

4 plastic buckets of known volume

1 wheelbarrow

1 or 2 measuring tapes

1 sifting screen

1 tamper/compactor

This list, of course, is an estimation. Materials needed will certainly vary depending on the size of the spring capping required. These items are usually necessary; however, they may not all be readily available. Alternative materials may be substituted if necessary.

1.7.5 Preparing Trainee Materials

All of the trainee handouts are regrouped at the end of the last session of the training guide. The purpose of regrouping is to allow the trainer to remove the entire packet of handouts for duplication without having to remove the handouts after each session. These handouts will form a packet of reference materials to take away from the workshop. One copy per trainee will be made of each handout with the exception of 2.5--Planning Guides—which requires multiple copies (one for each of 13 sessions times the number of trainees).

1.7.6 Securing Workshop Facilities

The training facilities must be arranged. There needs to be adequate meeting room space available during the entire 12 days for sessions to be conducted during the day. The room(s) also ought to be available for possible evening sessions. Since participants will meet as a total group as well as in small working groups, ideally more than one meeting room should be available. These meeting rooms should not be too far from the spring site or transportation will consume too much time.

Materials for the workshop itself include: flipcharts and flipchart stands (or blackboards), paper, pencils, magic markers, masking tape, a three-hole punch, and a stapler. Although flipchart stands and paper may be difficult to obtain, their use is superior to blackboards in that flipchart paper can be posted on the walls and left visible for later tasks or individual reflection. Blackboards usually provide much less writing space and require erasing before new material can be presented. Simple flipchart stands can be constructed out of locally available materials; they need not be the fancy, steel variety. Flipchart paper can be low-grade newsprint or butcher paper.

Room and board for the trainees must also be arranged. Ideally these facilities should be within walking distance of the workshop site so transportation will not be a problem.

1.7.7 Adapting the Session Sequence

The workshop curriculum has been designed for individuals who have direct or indirect responsibility for the planning, implementation, and monitoring of spring development projects using a retaining wall. The curriculum has been designed and written for all the sessions to be used in their numbered sequence. However, it is flexible enough for certain sessions to be used and not others, depending upon the role and job function of the participants.

Suggestions regarding sequence and choice of sessions for participants with four different kinds of job responsibilities follow.

For participants with responsibility for:

- Constructing the spring capping system

The following sequence of sessions is recommended:

Session 1:	Workshop Introduction
Session 2:	Introduction to Spring Development
Session 3:	Skills Assessment for Spring Development Technologies
Session 5:	Preparation for Spring Development Construction Activities
Session 6:	Layout and Excavation
Session 7:	Form Building and Reinforcement
Session 8:	Constructing the Foundation
Session 9:	Installation of Spring Retaining Wall and Pipe
Session 14:	Spring Site Completion
Session 18:	Planning Your First Spring Capping Project
Session 19:	Workshop Evaluation

For participants with responsibility for:

- Helping select the site
- Presenting various options to the community and facilitating decision-making
- Working with the community to help set up a water committee and determine its purpose and activities
- Training the guardians
- Evaluating a spring capping project

The following sequence of activities is proposed:

Session 1:	Workshop Introduction
Session 2:	Introduction to Spring Development
Session 3:	Skills Assessment for Spring Development Technologies
Session 4:	Survey Methods and Data Collection for Spring Site Selection
Session 5:	Village Preparation for Spring Development Construction Activities
Session 10:	Community Selection and Decision-Making
Session 11:	Community Involvement: Organizing the Community to Participate
Session 12:	Use, Maintenance, and Repair
Session 15:	Planning for Spring Capping Projects
Session 16:	Evaluating the Demonstration Spring Capping Project
Session 18:	Planning Your First Spring Capping Project
Session 19:	Workshop Evaluation

For participants with responsibility for:

- Maintenance and repair of spring improvements

The following sequence of sessions is recommended:

Session 1: Workshop Introduction
Session 2: Introduction to Spring Development
Session 12: Use, Maintenance, and Repair
Session 17: Alternative Spring Development Technologies
Session 19: Workshop Evaluation

For participants with responsibilities for:

- User health and education

The following sequence of sessions is recommended:

Session 1: Workshop Introduction
Session 2: Introduction to Spring Development
Session 4: Survey Methods and Data Collection
Session 13: Health Education for Spring Users
Session 19: Workshop Evaluation

When using a selected number of sessions rather than the entire curriculum, minor modifications in session content will have to be made. For example, the following steps of Session 1: Workshop Introduction would have to be modified:

- Workshop goals: These goals are based on the delivery of all sessions. Change to reflect the sessions chosen.

- Workshop schedule: The schedule displays all sessions. Change to reflect the sessions chosen.

- Key points about workshop: These points are made in reference to the entire curriculum. Change to reflect the sessions chosen.

- Trainer expectations: Some expectations are based on the delivery of all sessions. Change to reflect the sessions chosen.

Before making any decisions about which sessions to use, it is important to review the current and anticipated future job roles and functions of the participants as well as the session objectives and overviews.

There may be instances in which ministries and other organizations desire to broaden the knowledge and skills of a group of employees who currently have a limited area of responsibility. This may increase their understanding of how they fit into the overall spring capping program, enable them to better integrate their activities with others who have differing areas of responsibilities, and/or increase their ability to carry out tasks assigned to them. For example, extension workers with the responsibility for working with the community prior to spring capping construction, will be better able to explain the construction/installation activities and to help villagers plan and prepare for them, if they have been actually involved in constructing a spring capping retaining wall.

It is also possible to use the workshop curriculum with a group of participants who have different job functions and roles as a way of promoting team building, coordination and joint planning.

1.7.8 Preparing tne Staff to Conduct the Training Program

In order for a training program of this complexity to be conducted effectively, with events running smoothly, the training staff must certainly work together as a team. A vital part of working together as a team is having time together before the workshop begins to plan and coordinate how the training activities will be delivered. These planning activities should take several days and would include:

- A concerted effort to build the teamwork needed
- Developing a mutual understanding and clarity on how the training program will progress
- Making decisions on which trainer will do what
- Preparation for conducting workshop sessions
- Advance preparation for trainee field work (at site and in the community)
- Planning how workshop time and site progress will be coordinated
- Getting training materials ready
- Personal preparation time to get ready to deliver a session
- Planning for brief, daily staff meetings throughout the course

1.7.9 Workshop Check List and Time Table

The following table indicates the key steps and time frame for planning and implementing the spring capping workshop.

Activity	Time to Be Completed before Workshop
Determine how workshop will fit in with ongoing water program and how workshop activities (including training project well sites) will be followed up.	4 months
Determine role, experience, learning, and probable number of participants and decide on session sequence.	4 months
Identify/hire training staff (trainers, workshop coordinator and project/site supervisor).	2 months
Identify and recruit participants.	2 months
Determine type of spring capping system to be included in workshop.	2 months

Select an appropriate village or community for field work and choose spring site.	2 months
Locate adjacent training site facility and facility for participant/staff lodging and meals.	2 months
Work with village to obtain cooperation and appropriate participation.	1 month
Arrange all necessary transportation (to training site and between training site and spring sites).	1 month
Calculate, identify, and obtain all needed construction materials and tools.	1 month
Arrange for storage of supplies.	1 month
Identify and arrange for needed local labor force.	1 month
Prepare needed workshop materials including handouts relating to the specific spring capping system.	1 month
Trainers contact and work with village leaders and groups affected by the construction project.	2 weeks
Schedule and sequence construction work with labor crew.	2 weeks
Staff preparation for training.	2 weeks
Begin training.	—

1.8 Task Analysis

In Session 2, you will find the Task Analysis (Handout 2-4) for the field worker who manages spring capping projects. This task analysis is the basis on which this training guide was developed. It covers all the major tasks that an extension worker would do to plan and implement a spring capping project. The task analysis is divided into the five phases of the project cycle: pre-planning and assessment, planning and design, construction, maintenance and repair, and evaluation.

Each task is rated according to its importance and difficulty. The ratings are on a scale of one to three, with one high, two medium, and three low. For example, a task which is rated one in importance means it is very important and a task which is rated three is not critical but important enough to be taught during the workshop.

1.9 Workshop Schedule

On the following page the Workshop Schedule is presented in chart format. There are a number of ways the training sessions could be sequenced. However, in this instance the following factors were used to determine the sequence of sessions:

- The sessions should follow the natural flow of the project whenever possible.
- Training sessions must be sequenced to allow the construction activities to be completed properly. For example, before the wall can be built, the newly poured concrete foundation must have 12 hours to cure. After the wall has been constructed, another two days are needed for curing before the activities necessary to complete the spring capping can be begun. Training sessions dealing with non-construction activities have been scheduled during these curing times.
- Sessions are sequenced in ways that allow each session to be started and completed in a day or a half day. Sessions are usually more easily conducted if they do not begin one day and finish the next, especially sessions at the project site or in the community.

The sequence of the 19 training sessions are as follows with the number of hours for each.

SESSION NUMBER	TITLE	TOTAL TIME
1	Workshop Introduction	3 Hours
2	Introduction to Water Development	4½ Hours
3	Skills Assessment for Spring Development Technologies	1 Hour
4	Village Survey Methods and Data Collection for Spring Site Selection	6½ Hours
5	Preparation for Spring Development Construction Activities	5½ Hours
6	Layout and Excavation	6 Hours
7	Form Building and Reinforcement	7 Hours
8	Constructing the Foundation	7 Hours
9	Installation of Spring Retaining Wall and Pipe	6½ Hours

10	Community Selection and Decision-Making	4 Hours
11	Community Involvement: Organizing the Community to Participate	3 Hours
12	Use, Maintenance, and Repair	4 Hours
13	Education for Spring Users	3 Hours
14	Spring Site Completion	4 Hours
15	Planning for Spring Capping Projects	3½ Hours
16	Evaluating the Demonstration Spring Capping Project	2 Hours
17	Alternative Spring Development Strategies	4½ Hours
18	Planning Your First Spring Capping Project	3 Hours
19	Workshop Evaluation	1 Hour
	Total Time	78½ Hours
20	Mid-Course Evaluation (Optional)	1½ Hours

• The above training sessions should take no more than the time allocated to them. However, occasionally a session will take longer than usual. Trainers should make every attempt to manage time so there are few overruns. However, the evenings are left free and could be used occasionally to catch up.

It is recommended that either two half days or one full day be scheduled as time off. Twelve full days of training without a break can be very tiring for both staff and participants. We recommend starting on a Monday and taking Sunday off.

1.10 Adapting This Workshop for Other Predominant Spring Capping Systems

This workshop is intended to build skill and prepare the trainee to design and construct retaining wall spring capping systems. It is beyond the scope of this course to prepare the trainee to design and construct more than one type of system in the workshop. Session 17, Alternative Spring Capping Technologies, enables the trainee to become familiar with two additional systems, but there is not enough time in this workshop to prepare the trainee to actually learn how to do these other systems. As has already been stated, the Supplement allows the trainer to adapt the training guide for spring box systems. The guide could be similarly adapted for other systems.

An experienced trainer along with a technician experienced in designing and constructing other systems could adapt this workshop design to cover them in place of retaining walls. It would, of course, require major revision in those training sessions dealing with design and construction. The following training sessions would need major revision:

Session 5:	Preparation for Spring Development Construction Activities
Session 6:	Layout and Excavation
Session 7:	Form Building and Reinforcement
Session 8:	Constructing the Foundation
Session 9:	Installation of the Spring Retaining Wall and Pipe
Session 12:	Use, Maintenance, and Repair
Session 14:	Spring Site Completion
Session 15:	Planning for Spring Capping Projects

The remaining sessions would require only minor adjustments. The Supplement should serve as a guide in making the adaptation.

2. THE TRAINING SESSIONS

SYNOPSIS

SESSION 1: WORKSHOP INTRODUCTION

Total time: 3 hours*

PROCEDURES	TIME	HANDOUTS	FLIPCHART MATERIALS
1. Introduction	5 min.		Session Goals
2. Ice Breaker	30 min.		Task Instructions
3. Goals of the Workshop	10 min.	1-1: Overall Workshop Goals	Workshop Goals
4. Participant Goals and Expectations	60 min.		
5. Schedule and Methodology	30 min.	1-2: Workshop Schedule	Workshop Schedule
6. Workshop Procedures and Norms	15 min.		Trainer Norms and Expectations
7. Consulting Time for the Trainer and Each Individual Participant	5 min.		Sign-up Schedule
8. Closure	10 min.		

*Total time for each session does not include any breaks. The total is approximate and has generally been rounded off to the next half hour.

SESSION 1: Workshop Introduction

Total Time: 3 hours

OBJECTIVES

By the end of this session, trainees will have:

- Become acquainted with one another and the training staff
- Clarified expectations for the workshop
- Become familiar with the workshop goals and schedules

OVERVIEW

This is the first training session of the workshop. It introduces the participants to what they are going to do for the next several days and sets an overall atmosphere for learning and working together. The session should encourage the participants to feel that they are involved in the learning process with the trainers, and it should be made clear that the participants' ideas and contributions to this learning process are essential to the success of the workshop.

PROCEDURES

1. Introduction — Time: 5 minutes

First, briefly introduce yourself and the other members of the training staff. In the same brief fashion ask the participants in the group to introduce themselves. Then explain what this particular session will cover, referring to the session objectives and stating that the session will take about three hours, or the rest of the morning.

2. Ice Breaker — Time: 30 minutes

Explain that one of the goals of the session is to get to know one another and that the following activity is intended to help achieve that goal. Give the group the following task which you have put on a flipchart for clarification:

- Get up from your chairs.
- Choose one other person, talk with him/her, find out...

  Who the person is;

Previous Page Blank

Where the person is from;

What is one problem the person is having with the water supply in his/her village.

- Be prepared to share the same information about yourself and your village.

- Repeat this process with as many others as you can in the time allowed.

(Note to trainer: The training staff should engage in the same activity also.)

Encourage the participants to talk with more than one person. In other words, watch the amount of time that any two people spend talking together. They should be able to discuss those three or four points and exchange information with the person in four or five minutes and no more. Remember, the object is for them to talk to as many people as they can.

Allow this activity to take about 20 minutes or until the energy seems to dissipate. Then have the participants return to their chairs. Using no more than 10 minutes for this discussion, ask them these questions:

- Did you meet anyone you have worked with before or have known about previously?

- In talking with your co-participants, what did you find are some of the examples of the problems their communities appear to be having with their water supplies?

- With regard to water supplies, did the communities have anything in common? If so, what?

- Did you begin to get to know each other better?

3. Goals of the Workshop Time: 10 minutes

Have the Overall Workshop Goals prepared ahead of time as Handout 1-1, and have them written up on a blackboard or flipchart. Go over the goals with the group and make sure they are clear and understood. If the group has comments on the goals or wishes clarification, discuss the issues that are raised.

You may need to define the term "spring". It may be defined as a place where the water table reaches the surface and water flows out of the ground.

You may also want to explain that while spring improvement is but one way to improve the quantity and quality of drinking water, it is an especially effective one. Springs are often very reliable, convenient sources of water for villagers. With improvements, they can often be even more so. Other common water development technologies are dug wells, handpumps installed in wells, rainwater catchment systems, etc.

4. Participant Goals and Expectations Time: 60 minutes

It is important that participants have time to reflect and think about their personal goals for attending this workshop. All participants will have their own expectations of what this workshop will be like, what they will learn from it, and, in general, what is expected of them. This next hour will accomplish several things:

- Allow trainees to think through their expectations about the workshop.
- Allow them to share these expectations with their colleagues.
- Allow them to present these expectations to the training staff. In turn it gives the training staff an opportunity to know what the trainees' expectations are, which is valuable in implementing the course. It also provides the opportunity for checking to see that the trainees' expectations are realistic and that, in fact, they will be satisfied by the workshop as it is designed.

First, ask the trainees to take out a piece of paper and use the next 10 to 15 minutes to write down their goals and expectations for this training course. Give an example or two about what is meant by goals and expectations since the participants may not have encountered an activity such as this in a previous workshop or course of study. Check to see that they understand what they are to do, and allow 10 to 15 minutes quiet time for them to think, reflect, and write down their goals and expectations. Next, divide the total group into four smaller groups. Give the smaller discussion groups the following tasks:

- Share individual goals and expectations.
- Identify the five, six, or seven most commonly expressed goals and expectations.
- Write these on the flipchart paper provided.
- Choose a spokesperson who will briefly present these expectations to the total group.

Give the groups 20 minutes to complete this task. At the end of the 20 minutes, have the small groups join back into a large group and post the flipcharts on the wall. Have each group briefly report out on the goals and expectations that their group listed.

(Note to trainer: During the report out, or after each group has reported out, it is appropriate for the training staff to ask for clarity or more detail about any one of the expectations. This is the time when the training staff gains an understanding of what the participants are saying and expecting from the course.)

5. Schedule and Methodology Time: 30 minutes

Distribute Handout 1-2: Workshop Schedule. It is a good idea to have this schedule drawn up on flipchart paper and posted on the wall for use throughout the course. The presentation should be made from this larger picture of the

schedule. Go over the schedule and explain in general terms how the training activities are arranged to meet the goals. Explain the kinds of activities which will be taking place each day. Make sure it is clear that the participants understand this is a workshop and not a traditional course. They are going to learn principally by doing. The methodologies used will be case studies, field experience, group and individual problem-solving, discussions, role playing, demonstration and practice skill building.

Ask the participants to look over the expectations they have just completed and to note where and when in the schedule they see these expectations being met. Trainers should be expected to draw some conclusions for the total group by noting several of the key expectations and how they fit into the workshop schedule. They should be clear about whether or not the participants can anticipate these expectations will be met by the workshop. If any of the expectations will not be met, it is important at this time to discuss them and clearly explain why. Most participants will understand reasons why particular goals and expectations will not be met by the workshop if it is made clear to them in the beginning.

6. Workshop Procedures and Norms — Time: 15 minutes

Since the group will be working together for two weeks and in order to avoid future misunderstandings, it is important to clarify and discuss how everyone will work together. Have a list prepared of expectations that the training staff has of the group. List such things as starting and ending on time, expectations of group participation and responsibility. If you expect the group to work with their hands, say so. If you expect the group will be doing physical labor that requires them to get dirty, say so. Ask the group if they have any particular expectations of the instructors or of each other. Add these to the list and discuss. By the end of this segment, all participants should be clear about how they will work together and what is expected of them. This list should be on a flipchart and posted for the duration of the course.

7. Consulting Time for the Trainer and Each Individual Participant — Time: 5 minutes

Explain that one of the ways for the trainer and each participant to get to know one another better is for them to arrange to spend some time together in the early part of the course. In this way the trainer can become familiar with the particular goals and objectives the trainee has for attending the workshop and with any problems or peculiarities that the trainee might have in applying the content and technology from the spring capping workshop. Explain that the training staff will be conducting these small meetings at lunch breaks and during free time in the late afternoons and evenings. Have a sign-up sheet available and let the participants choose the time that would be more convenient for them.

8. Closure — Time: 10 minutes

Refer back to the session objectives and ask if everyone is clear about what the workshop will cover and how it will be done. Mention the next session, which will be Introduction to Spring-Water Development.

TRAINER NOTES

1. This session may seem very simple and you may wonder why it is being done. It is important that the participants be treated as adults and know what they are getting into and why. If these matters are dealt with at the beginning a lot of time and trouble are saved in the long run. It is also important that group members approach their work together in the same way that a project is approached in a community. This session establishes this framework.

2. You will need to prepare ahead of time the materials to distribute and items that are to be written up on a flipchart or blackboard. You will also need to think about the expectations you have for workshop norms ahead of time and have them listed on a flipchart.

3. Trainer meetings with individual participants are meant to be simply a short information-gathering exercise. As a trainer you will want to know as much as you can about the participants--why they are coming to the workshop and their particular successes and problems within their villages back home. This meeting should take no more than 20 or 30 minutes and can be done with one trainee or in small groups of two or three. You will want to consider ahead of time the areas you wish to ask questions about and be prepared so that you do in fact ask these questions. The following are suggestions on the type of questions you might want to ask:

   - Where are the trainees from?
   - What kind of work do they do?
   - How do they see this workshop useful to them in their village(s)?
   - What other types of community projects are they involved in?
   - What problems do they expect in implementing spring improvement activities in their villages?
   - What concerns and special problems do they have with this workshop?

MATERIALS

Flipcharts for:

Session objectives
Goals for entire workshop
Instructions for ice breaker
Workshop schedule
Trainer norms and expectations
Sign-up schedule for trainer/trainee meetings

Handouts:

1-1: Overall Workshop Goals
1-2: Workshop Schedule

General workshop materials—paper, pencil, pen, notebook or three-ring binder

OVERALL WORKSHOP GOALS

At the end of this workshop, trainees will be able to:

- Identify resources necessary to complete a village spring capping project.
- Communicate with village leaders and help them with activities needed for project implementation.
- Identify and apply strategies for involving the community in spring capping activities.
- Survey and evaluate sites for potential spring capping.
- Articulate and apply relevant theories about water and its relationship to environment and health.
- Develop and implement work plans and provide the logistical support necessary for project start up.
- Coordinate and supervise the work force and the delivery of materials.
- Design and build a retaining wall for capping springs.
- Describe three alternative spring capping systems: the spring box, seepage collection, and storage tank systems.
- Use, maintain, troubleshoot, and repair retaining wall spring capping systems.
- Identify strategies for solving the most common problems which develop throughout the development of spring capping retaining wall systems.
- Evaluate a spring capping project and document and record information gathered for future use.
- Develop action plans for implementing spring capping projects in their regular work environments.

WORKSHOP SCHEDULE

Day 1	Day 2	Day 3	Day 4	Day 5	Day 6
• Workshop Introduction	• Skills Assessment for Spring Development Technologies	• Preparation for Spring Development Construction Activities	Construction Activities		
			• Layout and Excavation	• Form Building and Reinforcement	• Constructing the Foundation
• Introduction to Spring Development	• Village Survey Methods and Data Collection for Spring Site Selection				

Day 7	Day 8	Day 9	Day 10	Day 11	Day 12
• Installation of Spring Retaining Wall and Pipe	• Community Selection and Decision-Making	• Use, Maintenance, and Repair	• Spring Site Completion	• Evaluating the Demonstration Spring Capping Project	• Planning Your First Spring Capping Project
	• Community Involvement: Organizing the Community to Participate	• Education for Spring Users	• Planning for Spring Capping Projects	• Alternative Spring Development Technologies	• Workshop Evaluation
					• Closure

Participant Guide Book

SYNOPSIS

SESSION 2: INTRODUCTION TO SPRING DEVELOPMENT

Total Time: 4½ hours

PROCEDURES	TIME	HANDOUTS	FLIPCHART MATERIALS
1. Introduction	5 min.		Session Goals
2. Lecturette/Group Discussion	15 min.		Lecturette Highlights
3. Field Trip	2 hrs.		Topics of Study
4. Discussion of Field Trip	45 min.	2-1: Spring Types 2-2: Water Cycle	
5. Project Cycle	15 min.	2-3: Project Cycle 2-4: Task Analysis	Five Cycle Steps
6. Generalizing and Applying	45 min.		
7. Introduce Planning Guides	15/20 min.	2-5: Planning Guides	
8. Closure	5 min.		

Previous Page Blank

SESSION 2: Introduction to Spring Development

Total time: 4½ hours

OBJECTIVES

By the end of this session, trainees will be able to:

- Define basic issues of water supply/usage at the village level
- Identify various types of springs
- Describe how and why springs are developed
- Describe how rock and soils affect groundwater supplies
- Describe nature's water cycle and groundwater quality
- Identify five stages in a spring-capping project and describe activities included in each stage

OVERVIEW

Water supply and how it is used is a very important issue for most villages. Having a convenient source where clean, safe water is available in sufficient quantity has a high priority in many places in the world. Springs have been a popular source of good water for peoples throughout the ages. Through some fairly simple technologies, spring water can be protected from contamination and made to flow directly through a pipe into the user's container—thus maintaining the pure qualities of good spring water.

This session is intended to provide an introduction and overview for spring development activities.

PROCEDURES

1. Introduction — Time: 5 minutes

Give the information contained in the overview, present the goals, and respond to questions.

2. Lecturette/Group Discussion on Spring Improvements — Time: 15 minutes

Ask the group this question: What are the major issues, concerns, or problems with water in your village? Write their responses on the flipchart.

Previous Page Blank

Explain that spring capping is one way to alleviate some of the problems listed on the flipchart.

Define spring capping as a series of steps designed to capture and control the natural flow of spring water so that it becomes a more useful, reliable, safe source of water. There are several ways a spring can be improved, depending on the spring and the needs or desires of the users.

Ask the group if they have had experiences with spring improvements, what they were, etc.

Present and describe examples of spring improvements such as:

- Damming up the water, covering it and inserting a pipe so it can flow into a container
- Constructing more effective drainage systems for spring areas
- Providing a splash pad or collection area of concrete or rock to make the spring more accessible and easier to keep clean
- Providing adequate space under the outlet for collecting springflow directly into a vessel
- Fencing to provide protection from animals
- Building a cistern so that the water can accumulate
- Directing several springflows to one collection point

Explain that in this workshop we will concentrate on spring improvements that are simple but effective and inexpensive and that use locally available materials. The benefits of these improvements are:

- Water flows from the ground through a pipe and directly into the user's collection vessel.
- The water collection area is easier to keep clean and more convenient to use.
- The safer, clean water cuts down on water related illness and disease.

3. <u>Field Trip</u> Time: 2 hours

Explain to the group the purpose of this short field trip. The trainers accompany the group. Mention that the following will be observed:

- Similarities and differences among springs
- The facets of improvement of an improved spring
- Water cycle and groundwater quality

- Rocks and soils and how they affect groundwater supplies.

Field Stop(s) for Studying Springs. Try to visit different types of springs. However, for each spring visited, point out or discuss with trainees these things:

- Type of spring
- True origin of spring flow
- Type of soil or rock
- Force of flow
- Quantity of flow
- Slope and drainage
- Obvious sources of contamination
- Water used for various purposes
- Dry weather vs. rainy season flow

Field Lecturette on Water Cycle. Do this brief lecturette at perhaps the second spring visited or at another site appropriate for capping.

Water Cycle:

Rainwater

Surface water (rivers, streams, lakes, oceans)

Groundwater—surface water that has flowed through rock and soils and is underground

Groundwater slowly flows to a point where it comes out of the earth as a spring or feeds streams, ponds, lakes, etc.

Evaporation back into atmosphere and becomes rainwater

Points to Make Are: (Demonstrate these when you can)

- There are many types of soils which contain varying mixtures of sand, gravel, clay and silt. Some of these are more porous (water can flow through) than others. Gravel allows water to flow through easily; clay is nearly impermeable.

- Filtration is the process of water passing slowly through soil or rock. The more porous the soil or rock the more easily water passes through. Filtration cleans water. When dirty water passes naturally through one meter of sandy soil or two meters of sand and gravel most of the dirt is absorbed or trapped by the soil.

- Impermeable soils such as clay or silt are so dense that water does not soak through. Most rock is impermeable; however, limestone is not. Water flows through limestone, even eroding parts of it.

- Rocks and soils are important in working with springs for these reasons:

  - Any spring improvement structure needs to be built on firm soil or rock.

  - Quality of water (safety, clarity, taste, smell) can be dependent on the type of rock or soil it flows through.

  - Spring flow coming out of the ground could be in the midst of loose, silty soils—a muddy mess. Sometimes this can be cleaned out and rocks put in to keep the flow area cleaner and less muddy.

Field Stop(s) for Studying Capped or Improved Springs. To vary the discussion process a bit, ask the participants to point out and describe the improvements they see in this spring. Ask them these questions:

- What improvements do you see?

- What different things appear to have been done in making these improvements (i.e., drainage, pipe, enclosing)?

- How does this system for providing water appear to work?

- How is the spring flow protected from contamination?

- Why is the water quality better than at the unimproved spring?

Be sure to answer the questions if the trainees cannot answer them. The point is to let the trainees discover the main facets of an improved spring rather than have the trainer point them out and describe them.

4. Discussion of Field Trip — Time: 45 minutes

Lead a short discussion in the workshop on the types of springs trainees saw on the field trip. Ask them to describe the types of springs they visited and how one spring differed from another.

Summarize their comments by stating the three basic types of springs: 1) spring with adequate slope coming out of a hill, 2) spring which bubbles up out of the ground, and 3) several little separate seeping springs coming out of an area.

Explain that that first type is the most common and the easiest to improve. Explain the advantages of slope.

The second type is the most difficult to get a usable improved spring from because proper drainage is difficult and the water flow has to be strong enough to raise the water level in the small storage area so that the water can flow directly into containers. Water dipped from a spring pool with containers is less sanitary than water flowing out of a pipe or bamboo pole.

The third type requires a more complicated improvement system since it must direct the water from all the small "seeps" into one collection point. This can be a very usable improved or capped spring, but these improvements can be more complicated to construct and maintain. Distribute Handout 2-1: Three Types of Springs.

Distribute Handout 2-2: The Water Cycle in Nature, which supplements the brief lecturette given in the field. Give the trainees time to read the handout. Ask if they have questions.

Refer back to the lecturette (given before leaving for the field trip) in which examples of spring improvements were identified. Go over those items again, linking them to the field observations. (Damming up water, covering it, and inserting a flowpipe; drainage procedures; splash pad; accumulation container; and a water filter.)

5. Project Cycle — Time: 15 minutes

Present the project cycle for developing a spring. Use a big graphic, either two flipchart pages or the blackboard. Distribute Handout 2-3: Spring Capping Project Cycle. Briefly describe the five steps of the cycle.

Explain how the course is organized and how the training sessions relate to the project cycle.

Distribute Handout 2-4: Task Analysis for Field Workers. Explain to the trainee what it is and how they will find it useful. Suggest they read it through in their leisure time. Mention that a short workshop session on skills needed or required of the individual fulfilling these tasks will be held the next day.

6. Generalizing and Applying — Time: 45 minutes

Ask the group to reflect on the entire afternoon session and to identify some of the things they feel they have learned. List these items on the flipchart. Spend no more than 10 minutes on this activity.

Then ask the participants to spend a few minutes relating what they learned to the situation in their home village(s). Guidelines for this reflection could be:

- Have some of these spring improvements been implemented in my village or area?
- What kinds of springs are in or near my village?
- What options might I have in implementing some spring improvements in my village?
- How would the villagers feel about these activities?

7. Introduce Planning Guides — Time: 15 minutes

Introduce the concept of planning guides. Give a brief lecturette on the purpose of these guides and how they will work. Distribute Handout 2-5: Planning Guides and give the trainees time to read it (10 minutes).

Ask the trainees if they have questions on how the planning guides can be useful. Explain how they will be creating their own project guide by putting their notes from training sessions, the handouts they receive, and these planning guides into their notebooks. Discuss the importance of keeping this notebook in usable form for the future.

It is unlikely participants will have much to contribute to the planning guides since it is the first day of the workshop. So when they fully understand how the guides will be used throughout the course, move on.

Note to Trainer: The planning guides will be used for Sessions 4 to 16. Multiple copies should be made in advance and a clean copy distributed to each trainee at the appropriate time in the session. The number of copies to be made equals the number of trainees times 13 (the number of sessions in which they are needed).

8. Closure. Time: 5 minutes

Refer back to the objectives and close the session.

MATERIALS:

Flipcharts for:

Session objectives
Highlights of lecturette
Topics of study on field trip
Project cycle

Handouts:

2-1: Three Types of Springs
2-2: The Water Cycle in Nature
2-3: Spring Capping Project Cycle
2-4: Task Analysis for Field Workers Who Manage Spring Capping Projects
2-5: Planning Guides for Your Spring Capping Projects

Advance preparation required:

Field trip sites researched and chosen
Transportation arranged

(Note to Trainer: Three-ring binders with dividers should be provided to participants. There are two methods for handling participant handouts: 1) each time a handout is distributed, it can be inserted into the notebook by the trainee, or 2) all handouts can be inserted in the three-ring binder and distributed the first day of the workshop. Three-hole punched handouts will be more convenient.)

THREE TYPES OF SPRINGS

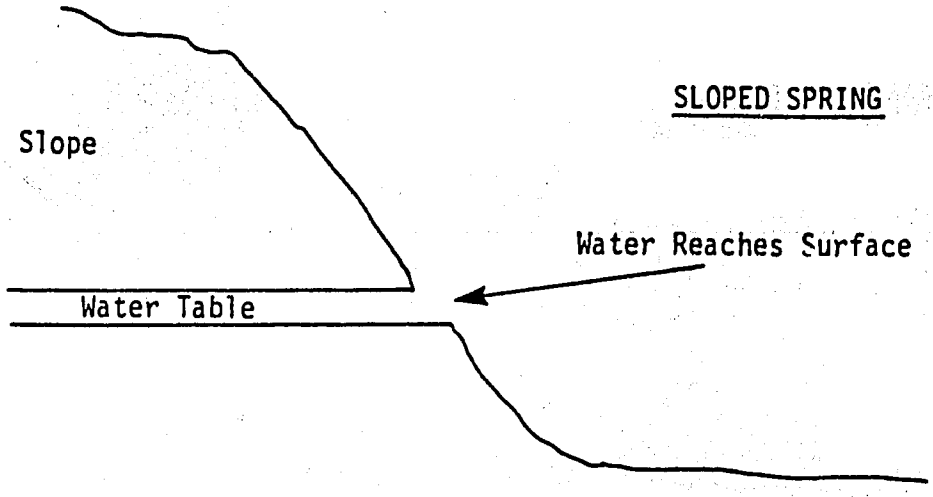

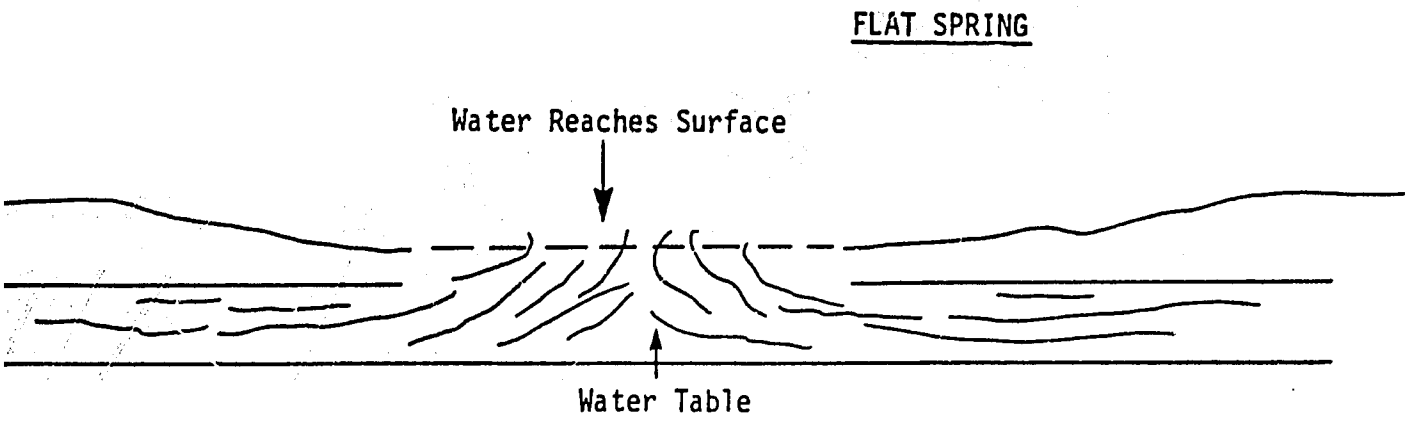

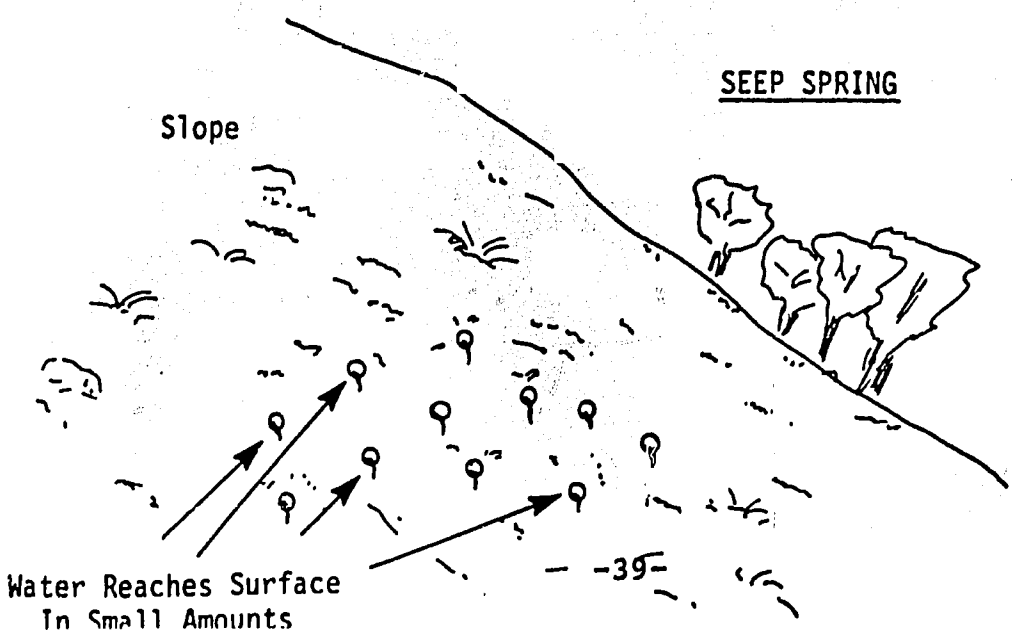

THE WATER CYCLE IN NATURE

Each time it rains, rain falls on the earth, in the rivers, in lakes and in oceans. When rainwater falls on the earth, part of it stays on the surface and feeds directly into streams and rivers, but another part penetrates the soil and little by little arrives at what is called the water table. It often takes water a long time to reach this water table, and during that time it becomes potable water because it is filtered by the soil. Rain falling on the soil must penetrate various strata (sand, limestone, gravel, clay) which become more and more closely packed, and which are very difficult for water to penetrate. In this way, the impurities and micro-organisms found in the water are retained by the soil, and the water becomes cleaner and cleaner. Under the water table is found an impermeable layer, of bed rocks or hard, clay-like soil, through which water cannot penetrate. The depth of the water table varies from place to place and can be right at the surface or as low as several hundred meters from the surface. The water in the water table never stagnates; it always flows slowly downhill, towards valleys, rivers and lakes, and finally reaches the ocean.

However, sometimes this water finds an outlet from the ground before arriving at a river. When the water table meets the earth's surface, one sees wet, soaked soil, and this is called a spring. It is here that people often come to draw water.

Also, sometimes the water table never reaches the earth's surface, and it becomes necessary to dig wells in order to gain access to water.

To review the water cycle, rain water falls on the earth. A part of this rain water flows directly into rivers, lakes, and oceans, and another part penetrates the soil and finally arrives at a body of water or at the surface of the earth.

Then the sun heats all the water on the earth's surface and some of it evaporates into the air, to form clouds which at a later time will form rain, and the cycle will continue.

How Does Water Become Contaminated?

In most cases, water in the water table (or groundwater) is clean and potable and contains few organisms which cause illnesses. Often it is at the spring where contamination originates. Here, leaves from trees, weeds, etc. can enter the spring water. Rainwater flowing down hills can enter spring, carrying mud, filth from the surface, and even animal and human waste. Animals such as goats and pigs may use the spring for drinking or even to bathe in and thus may pollute it.

Also, people often draw water with unclean pots or buckets, and this too can contaminate water. Sometimes spring water does not flow well and stagnates with leaves and weeds carrying micro-organisms which have fallen into it. Algae forms, too, and all multiply rapidly in this water. In addition, occasionally there is not enough slope for the water to flow clear of the spring outlet, so the water continually re-enters the spring outlet and contaminates new water flowing out.

Previous Page Blank

If there is a latrine near the spring, contamination is likely and dangerous. Many microbes live in the excrement of human beings.

Water from a spring which is open and not well managed can easily be contaminated in many ways. The question, then, is how can we protect a spring from this potentially great contamination?

Springs: Springs are points where water from an underground source is able to seep to the surface. Flows are typically less than 2 LPS, but some can be quite substantial. The flow of a spring is governed by several factors: watershed collection area, percolation rate of water through the ground, thickness of ground above the aquifer (ie- overburden), and the storage capacity of the soil. Springs are seasonally variable, tending to lag behind the seasonal rainfall patterns (ie- springs can give normal flows well into the dry season before tapering off, and may not resume full flow until after the rainy season is well under way). Due to ground percolation and filtration, most springs are quite free of the pathonogenic organisms that cause many health problems; however, some springs flow through limestone or geologic cracks and fissures in the rocks. In such cases, filtration effects are minimal, and the flow may still be contaminated. Also, it is possible that the source is not a true spring at all, but rather a stream that has gone underground for a short distance and is re-emerging. Investigation around the source will reveal the type of spring it is. Figure 2-1 shows the typical geology of a spring, showing the different levels of ground water during the dry - and rainy seasons.

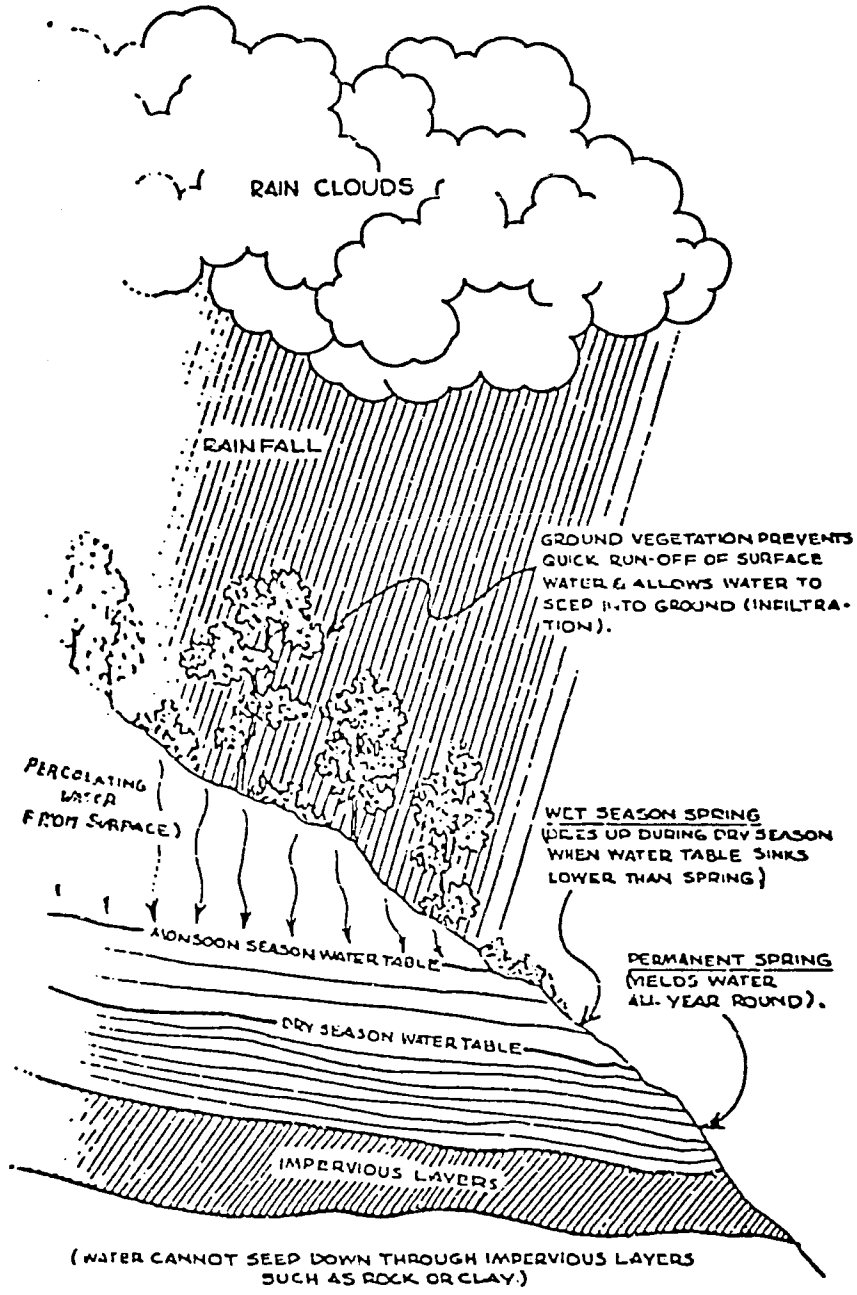

HYDROLOGIC DIAGRAM OF SPRINGS

taken from: T.D. Jordan, Jr., Gravity-Flow Water Systems, UNICEF, Nepal

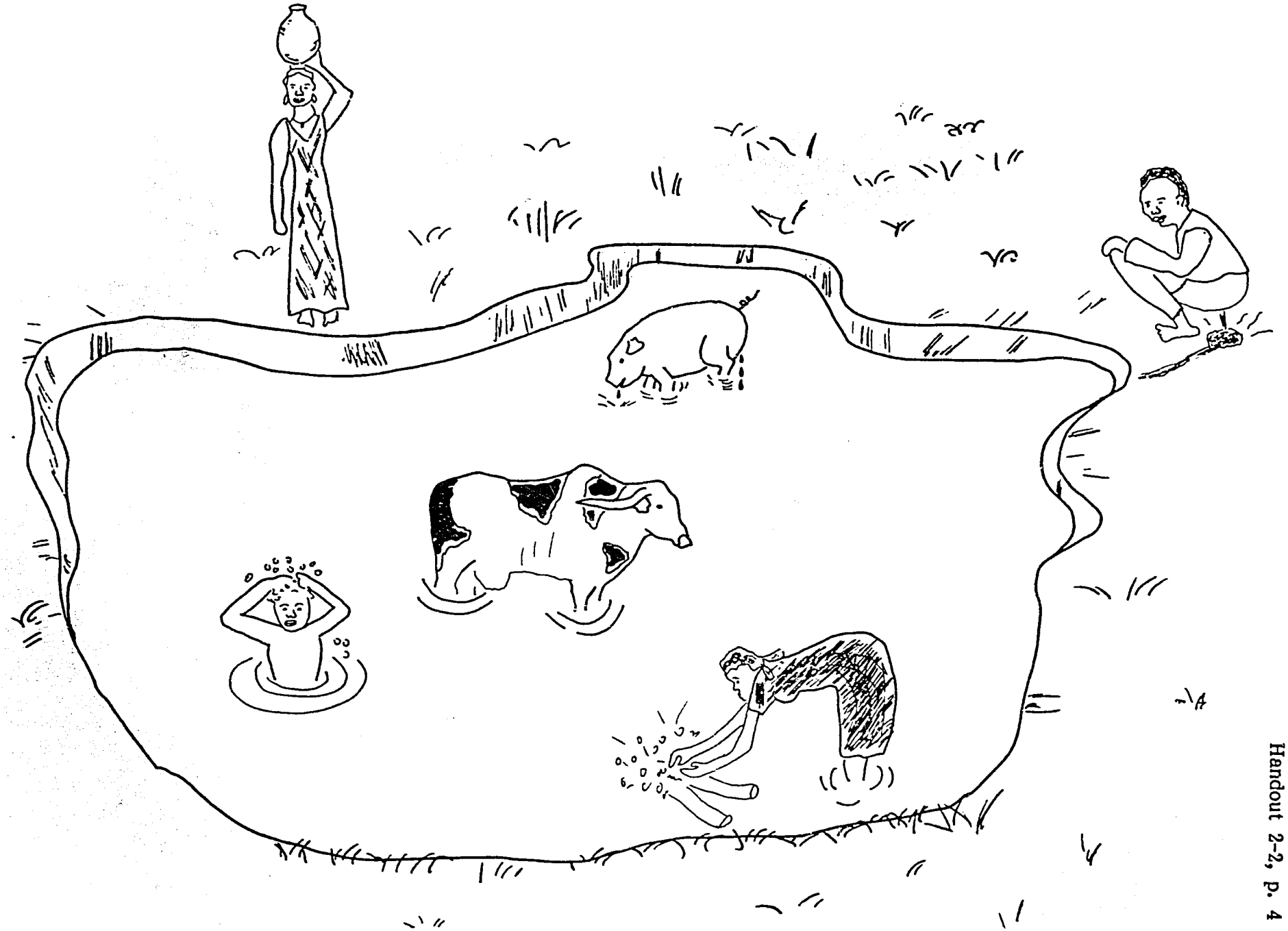

ILLUSTRATIONS OF WAYS WATER IS CONTAMINATED

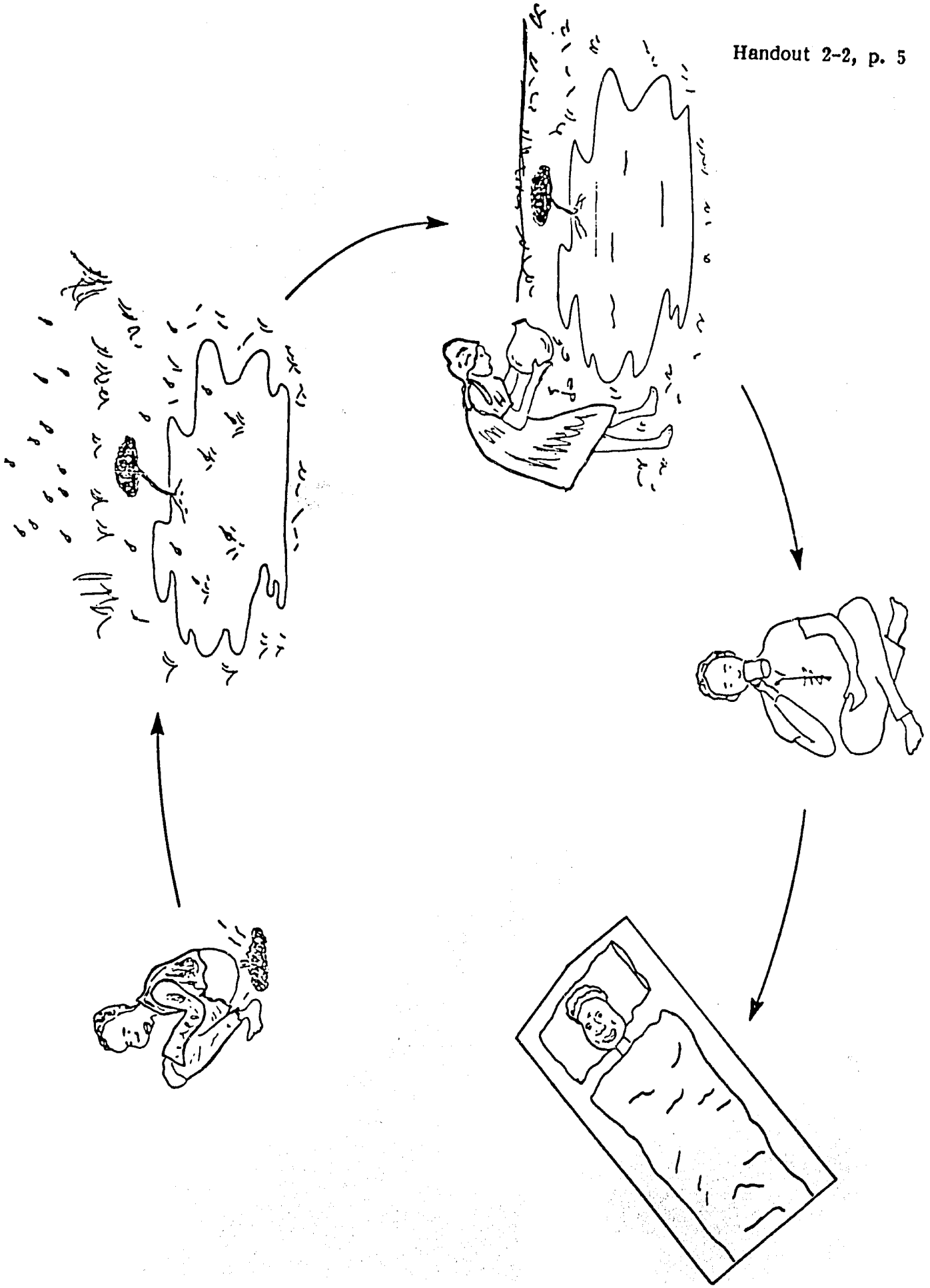

FECAL-ORAL PATH

SPRING CAPPING PROJECT CYCLE

PREPLANNING	PLANNING & DESIGN	CONSTRUCTION	OPERATION, MAINTENANCE, AND REPAIR	EVALUATION
Planning how to work spring capping into work load	Determine maximum springflow and type of development required	Layout/prepare site, create surface diversion	Select/train guardians	Reflection on project, note what changes should be made before repeating cycle with next spring
Identifying resources needed for a village spring capping project	Design/conduct sanitary survey of village water usage	Excavation for proper foundation and spring capture	Train users in proper usage	Determine ways to integrate spring capping results into other community health and sanitation programs
Design/conduct preliminary studies to determine which villages to begin with	Compile/analyze/recommend appropriate sites	Design/construct concrete forms, lay rocks and mortar	Design/implement necessary maintenance schedule	Encourage village to celebrate completion
Meet with and explain spring capping to village leadership	Present survey results to leadership; facilitate decision to proceed	Mix/pour concrete	Explain sanitation measures to villagers	Identify future work for improving village water resources
Meet with local users to find out their concerns and issues about their water requirements	Develop work plan for construction	Install structure(s)	Be prepared to solve any operational problems that arise; repairs	
	Organize village labor force	Lay piping, complete connections, finish off the installation	Recommend appropriate measures for making additional improvements of convenience	
	Plan for and obtain needed materials and tools for construction	Prepare and implement spring protection measures		

Previous Page Blank

TASK ANALYSIS FOR FIELD WORKERS WHO MANAGE SPRING CAPPING PROJECTS

Importance	Task Difficulty	
		PRE-PLANNING STAGE
1	2	1. Determine availability of outside resources which might be necessary in a village spring capping project (i.e., materials—cement, sand, gravel, tools; funding—cash contributions, loans, etc.; other spring capping efforts in the region; technical expertise—technicians from other types of projects, development agencies, etc.).
2	3	2. Assess current work responsibilities and commitments and plan how to incorporate spring capping project responsibilities into this existing work load.
2	3	3. Discuss and clarify job expectations with supervisor, setting up communication and reporting procedures to be used throughout the project.
2	3	4. Publicize availability of service to the region where you work.
1	1	5. Design and conduct preliminary studies of villages in the region, setting up criteria to determine which village(s) would be appropriate to begin a self-help spring capping project. Criteria might include comparative degrees of need, interest, and commitment; technical difficulty; village leadership capabilities; and socio-political conflicts.
1	1	6. Design, conduct, and document preliminary sanitary surveys to determine the most likely village for the initial project. Data should include number of, location, and condition of springs; flows during driest season; number of users; different uses; sources of contamination; sanitary practices and prevalent diseases.
1	1	7. Meet with and explain to village leaders just what spring capping is, why it is needed in the village, and how it will help the villagers.
1	1	8. Present to village leaders recommendations on how to proceed with spring capping in the village as well as helping the leaders to arrive at a decision whether to commit village resources to the project.
1	2	9. Meet with villagers to discuss current problems with springs and seek their suggestions on what would improve the use of the spring as a water source. Explain to villagers in ways they can understand what spring capping is and how it would be beneficial.

Previous Page Blank

Importance	Task Difficulty	
2	1	10. Involve women at all stages of project development as users and decision makers.
2	2	11. Resolve the most common problems the extension worker encounters in utilizing a village to actually construct the capping facilities. Among these problems are weak village leadership, political issues, scarcity of labor, scarcity of materials, transport of materials, etc.
3	2	12. Interest people in water/health behavior and practices, realizing that changing attitudes toward water use, environmental sanitation, and personal hygiene is a long-term process.
		PLANNING AND DESIGN STAGE
1	1	13. Disturb spring and determine maximum flow, force, and type of improvement required. Determine rainy season flow conditions and what impact they will have on the design.
1	1	14. Design and conduct a detailed sanitary survey, involving appropriate members of the community in collecting information. Survey specifics could include traditions, customs, historical usage, reliability, collection time and volume, and sources of contamination.
1	2	15. Compile and analyze all information (both socio-political and technical) on possible sites, developing recommendations for which site is the most appropriate.
1	2	16. Present survey results, specific site recommendations, and plans and requirements for implementation to village leadership.
1	1	17. Plan and supervise the preparation of construction activities with the village mason and workforce. Demonstrate leadership by organizing the logistics and exploring alternatives for required materials and other resources; e.g., quantities, costs, and transport of locally available materials, tools, cement, and pipes; and days required and appropriate scheduling of labor.
		CONSTRUCTION STAGE
1	2	18. Lay out and prepare spring site for improvement. Create surface-runoff diversion and drainage ditches.
1	2	19. Excavate to a level suitable for proper foundation (impermeable layer) and spring capture.

Importance	Task Difficulty	
1	1	20. Design and construct concrete forms including placement of reinforcement where required.
1	1	21. Select materials and properly mix, pour, and cure concrete spring or storage structures.
1	2	22. Install structures; complete connections; lay gravel, piping, and water seal materials (e.g., clay, plastic); and backfill and grade with compacted soil.
1	2	23. Take measures to protect the spring and insure effective operation; e.g., fencing, separation of uses, height of discharge pipe. Use shallow rooted plantings and rocks for stabilization and erosion control.
1	1	24. Solve problems which may arise; e.g., inadequate curing of concrete, alteration of natural spring flow, inability to reach impermeable layer.
		OPERATION, MAINTENANCE, AND REPAIRS
1	2	25. Help the users to select a responsible guardian and assistants. Demonstrate to the users and train the guardians in proper operation and usage of the improved spring.
1	2	26. Develop and schedule appropriate maintenance procedures, e.g., cleaning spring box, clearing diversion and drainage ditches, repairing protective fencing.
3	2	27. Now that the villagers have put their time and effort towards cleaner spring water, make it clear that in order to realize the full benefits of their investment they must practice proper hygiene and sanitation. Demonstrate rinsing of containers and proper household storage, and avoiding possible sources of contamination.
2	1	28. Determine if a malfunctioning spring should be repaired, replaced, or abandoned. Recognize and be able to solve common problems which develop, e.g., undermining of foundation by spring flow, poor settling, unsanitary usage.
3	2	29. Discuss with the spring users ways to incorporate additional improvements in convenience or more effective water usage (e.g., clothes washing pads below spring discharge, use of drainage water for crops, construction of storage tank and transmission line).

Importance	Task Difficulty	
		EVALUATION STAGE
3	3	30. After the initial spring capping project is completed, the extension worker will need to reflect on how the project progressed, what worked and what didn't, and what should be done differently the next time.
3	2	31. Integrate water improvement project into other village health and sanitation activities (i.e., health education programs, sanitation improvement efforts, disease control, etc.).
3	3	32. Encourage the village to celebrate and feel proud of the completion of the spring capping effort.
2	3	33. Schedule periodic visits to return to the spring to see how the capping is working.
3	2	34. Identify what future spring capping activities would be appropriate for this village. Develop means for infrastructural support. Present needs and results to authorities.

CODE:

Importance:

1 - must be done
2 - should be done
3 - could be done to extend benefits

Task Difficulty:

1 - very
2 - moderately
3 - easy

PLANNING GUIDES FOR YOUR SPRING CAPPING PROJECTS

Throughout this workshop you will be learning new skills and acquiring new information. Each one of you will have individual ways of managing (keeping track of, recording, remembering) what you have learned so that you have on hand the new skills and information you need to begin your spring capping activities. This planning guide will: 1) help you record notes on the workshop and observations on how what you are learning applies to your project or site conditions; 2) serve as a stimulus for your thinking, perhaps sparking new ideas or awareness; and 3) serve as a planning mechanism for your first spring capping project.

Specifically, the objectives of this planning guide are to help you to:

- Reflect on the activities in the training session you just completed in order to more clearly crystallize what you have learned
- Identify skill and knowledge gaps so that you can address these before the workshop is over
- Plan how you would apply these new skills and knowledge to your first spring capping project

How these planning guides will be used in the workshop

Some time will be set aside during the workshop at the end of each major training session for you to work on your planning guides for your own project. At that time the trainers will give you a clean copy of the planning guide to fill out for the major points of that session. (You may find you want to work with them occasionally during your free time.) Obviously, the more you are able to work on how you plan to cap your first spring, the more confident and the better prepared you will be to begin. There will also be a final planning session toward the end of the workshop.

PLANNING GUIDES FOR YOUR SPRING CAPPING PROJECTS

Spring Capping Activity on _____

_____

KEY STEPS

What are the steps I plan to follow in implementing this activity?

DIFFICULTIES What difficulties do I expect to encounter?

How do I plan to deal with these difficulties? Who can help me?

TIME How long will this activity take?

COMMUNITY INVOLVEMENT AND LABOR	Who must I talk with to accomplish this activity?
MATERIALS AND TOOLS	What materials and tools will I need? Where will I obtain them?
	How much will they cost?

SKILLS AND KNOWLEDGE	What aspects of this activity do I feel the least prepared for? How can I prepare myself more in this area?

OTHER COMMENTS:

SYNOPSIS

SESSION 3: SKILLS ASSESSMENT FOR SPRING DEVELOPMENT TECHNOLOGIES

Total Time: 1 hour

PROCEDURES	TIME	HANDOUTS	FLIPCHART MATERIALS
1. Introduction	5 min.		Session Objectives
2. Skills Assessm Instrument	15 min.	3-1: Self-Assessment of Skills	
3. Discussion in Pairs	20 min.		
4. Total Group Summary	20 min.		

SESSION 3: Skills Assessment for Spring Development Technologies

Total Time: 1 hour

OBJECTIVES

At the end of this session, trainees will have:

- Assessed their current skill level against the skills listed in the task analysis
- Identified skill strengths and weaknesses and areas to improve during the workshop.

OVERVIEW

It is important for the participants to have several opportunities to assess their knowledge and skills during the workshop. The task analysis provides a method for participants to assess themselves against all the key tasks involved in a spring development project. It is important to provide participants an opportunity to assess their skills early in the workshop and again toward the end of the workshop. This session contains a self-assessment instrument based on the task analysis which will be used throughout the workshop to assess skill development progress.

PROCEDURES

1. Introduction: Time: 5 minutes

Give the information contained in the overview, present the goals, and respond to questions.

2. Skills-Assessment Instrument Time: 15 minutes

Distribute Handout 3-1: Self-Assessment of Skills and explain its purpose. Emphasize that it is a self-assessment instrument and, as such, is a tool for individuals to use in managing their own learning. Go over the instructions for completing it to make certain they are clear. Then give trainees time to complete it.

3. Discussion in Pairs Time: 20 minutes

After the instruments are filled out by individuals, have them work with another colleague and discuss mutual areas of strengths and weaknesses and areas where improvement would be sought during the workshop.

Previous Page Blank

4. Total Group Summary Time: 20 minutes

Ask the pairs to share with the total group common skills they need to learn in the workshop. Write these skill areas on the flipchart or blackboard as they are identified. Lead a discussion on the new skills needed. Comment on the workshop methodology with its emphasis on learning by doing. Help the trainees understand how these identified skill needs will be handled in the workshop.

Explain that participants will have an opportunity to look at their skill development progress at other points during the workshop. The next time they will check their perceived skill levels will be at the end of the three days of the construction phase of the project.

TRAINER NOTES

The participants need to be given an opportunity to assess themselves again on a clean copy of the instrument at least one more time before they leave the workshop. Logical times would be at the completion of the construction phase and/or before summarizing back-home planning. Whenever this is done again, be sure to give the participants time to: 1) fill out the form again, 2) compare scores from the first time, and 3) develop a plan for improving in areas that still need work.

MATERIALS

Flipcharts for:

Session objectives

Handouts:

3-1: Self-Assessment of Skills Necessary for Implementing Spring Development Technologies

SELF-ASSESSMENT OF SKILLS NECESSARY FOR IMPLEMENTING SPRING DEVELOPMENT TECHNOLOGIES

Rank yourself in terms of how well you feel you now do each of these tasks. This is for your use only, so please be accurate and honest with your answers. Put check marks in the appropriate columns:

Column 1 if you now do this task well
Column 2 if you now do this task okay
Column 3 if you now do this task with difficulty
Column 4 if you can't do this task

Do well	Do okay	Do with diffi-culty	Can't do	
				Pre-planning Stage
				1. Determine the availability of resources necessary for a spring capping project.
				2. Incorporate the spring capping project responsibilities in your overall work commitments.
				3. Promote the availability of spring capping improvements in your region.
				4. Design and conduct preliminary studies of villages, setting up criteria to determine which villages are appropriate to undertake a spring capping project.
				5. Design and conduct preliminary sanitary surveys to determine the most likely village for the initial project.
				6. Determine who are the most appropriate individuals in the community to involve in the project.
				7. Develop strategies for involving the appropriate community members, including women, in the various stages of project development.
				8. Explain to community leaders what capping a spring involves and why it will benefit the community.

Do well	Do okay	Do with diffi-culty	Can't do	
				9. Explain to villagers three types of spring capping systems: retaining wall, spring box, and seepage collection.
				10. Make recommendations to the community on how to proceed with a spring capping project.
				11. Resolve common problems in motivating a village to undertake a spring capping project.
				<u>Planning and Design Stage</u>
				12. Determine maximum spring flow and type of spring improvement needed.
				13. Design and conduct a detailed sanitary survey.
				14. Gather, record, and analyze all the information on possible sites.
				15. Present survey results to the village leaders.
				16. Plan for the labor force needed for the construction.
				17. Schedule all construction activities, estimating the amount of time required for each activity.
				18. Estimate the tools and materials needed for capping a spring.
				<u>Construction Stage</u>
				19. Lay out and prepare the spring site.
				20. Control and divert surface water and spring flow.
				21. Find a stable impermeable location for the foundation of the retaining wall.
				22. Size and design the foundation and retaining wall.

Do well	Do okay	Do with diffi-culty	Can't do	
				23. Design and construct wooden forms for the concrete.
				24. Shape and place reinforcement material.
				25. Mix, pour, and cure concrete.
				26. Build the retaining wall using rocks and mortar and install service pipes.
				27. Seal and backfill the excavated spring area, erect fences to keep animals away, and use shallow rooted plants and rocks to prevent erosion.
				28. Solve problems common during construction such as inadequate caring of concrete, alteration of spring flow, and inability to reach the impermeable layer.
				<u>Operation, Maintenance, and Repair Stage</u>
				29. Help community to select and train a guardian in operation and usage of the improved spring.
				30. Develop procedures for routine maintenance, e.g., cleaning the spring box, clearing diversion and drainage ditches, and repairing the fencing.
				31. Demonstrate proper hygiene and sanitation practices, e.g., rinsing containers, storage of water, and avoiding sources of contamination.
				32. Determine if a malfunctioning spring should be repaired, replaced, or abandoned.
				33. Solve common problems such as undermining of the foundation by the spring flow, uneven settling of the structure, poor drainage, and unsanitary usage.
				34. Discuss with users ways to make additional improvements such as washing pads, use of drainage water for crops, and construction of storage tanks.

Do well	Do okay	Do with diffi-culty	Can't do	
				Evaluation Stage
				35. Evaluate each spring capping project for lessons learned.
				36. Integrate spring capping project into other health and sanitation activities in the community.

SYNOPSIS

SESSION 4: VILLAGE SURVEY METHODS AND DATA COLLECTION FOR SPRING SITE SELECTION

Total Time: 6½ hours

PROCEDURES	TIME	HANDOUTS	FLIPCHART MATERIALS
1. Introduction	5 min.		Session Objectives
2. Lecturette/Discussion	10 min.	4-1: Lecturette Notes	Lecturette Points
3. Group Activity	40 min.		
4. Survey Team for Experience	30 min.	4-2: Sanitary Survey Form 4-3: Sanitary Survey Article	
5. Preparation for Field Task	30 min.		Tasks for Survey Teams
6. Field Trip	3 hrs.	4-4: Flow Measuring Techniques	
7. Field Trip Discussion	30 min.		
8. Conclusions	15/20 min.		
9. Applying Principles	30 min.		
10. Closure	5 min.		

SESSION 4: Village Survey Methods and Data Collection for Spring Site Selection

Total time: 6½ hours

OBJECTIVES

By the end of the session, the trainee will be able to:

- Measure and calculate the flow of a spring
- Identify sources of contamination in the village
- Gather, record, and organize the necessary information for the selection and initial planning and design for capping a spring
- Use five specific selection criteria to evaluate a spring site
- Interview villagers concerning spring usage
- Use and develop maps for planning and recording field work

OVERVIEW

This session presents five criteria for the selection of the spring to cap and develops the information that must be gathered by field survey to satisfy those criteria. Trainees will conduct their own village survey, using common survey methods or strategies such as interviewing, measuring, estimating, and mapping. Many of the characteristics of springs and their relation to the users and their environment covered in the previous session will be investigated during the village survey.

PROCEDURES

1. Introduction — Time: 5 minutes

Give the group the information in the overview and state the objectives. Answer any questions.

2. Lecturette/Discussion — Time: 10 minutes

Briefly explain the five criteria used for selecting or evaluating a spring for possible spring capping.

1) Is the flow adequate? The spring has an adequate flow if it can provide enough water for at least the daily drinking water needs of the user group or village. Steps for determining this are to measure the flow of the spring to arrive at the total volume produced

in one day and divide this by the number of people to be served by the spring. We will do this measurement this afternoon. By measuring the flow you obtain the number of liters available for use per person per day. Then compare this amount to the minimum standard of 15 liters per person per day to determine if the spring flow is adequate or not.

Remember animals may be watered from this spring also. The following are approximate minimum water needs per animal: cows 10/15 liters; buffalo 15/20 liters; goats 5/10 liters; chickens 5 liters per dozen.

2) Is the spring flow reliable? A spring flow is reliable only if it is constant and adequate through both wet and dry seasons for many years.

3) Is the water safe to drink? Remember that spring water is often the best quality nature has to offer. It is continuously flowing from a source underground which has been purified by slowly filtering through many meters and layers of soil. However, it must be uncontaminated by pit latrines and other sources of human waste, livestock, fish ponds, food processing (for example manioc soaking and fermentation), bathing, washing, surface water runoff, and flooding.

4) Is the water convenient and accessible to the users? A spring should be as close to the users as possible to minimize the daily work required by the women and children to collect and haul water. Difficult and hazardous crossings should be avoided, for example, roads, log bridges, or infested waters.

5) Is it technically feasible to cap the spring?

in determining if it is technically feasible to cap a specific spring, there are several factors to be considered.

- A spring should have an adequate slope for proper drainage.
- It should have protection from flooding and diversion of watershed runoff.
- The slope should be steep enough so that a collection vessel can be placed underneath the discharge pipe.
- Labor and materials such as gravel, rock, sand, and clay should be locally available.
- There should be a solid footing on well-drained ground for the structure.

Distribute Handout 4-1: Lecturette Notes.

3. Group Activity Time: 40 minutes

Divide the total group into five smaller groups. Assign each group one of the selection criteria, and ask group members to identify or list the information needed to assess the spring for a particular criterion. Have each group put its information list on flipchart paper. Post all five sheets in a prominent place and lead a brief discussion of the information needed for each criterion. Accept additions to the list, answer questions, and discuss.

In the following list, for each criterion, is a sample of the type of information the trainees are expected to generate.

1) Is the spring flow adequate?

- Measure the spring flow.
- Determine the number of users (both persons and animals).
- Calculate daily usage.
- Compare spring flow with daily usage.

2) Is the flow reliable?

- History of spring flow
- Seasonal flow variation

3) Is the water safe to drink?

- True origin or source of the spring
- Sources of contamination
- Sanitary handling and storage
- Physical characteristics such as taste, temperature, clarity

4) Is the water convenient and accessible to the users?

- Distance
- Elevation
- Hazards

5) Is it technically feasible to cap this spring?

- Are the labor and construction materials available?

- Is there adequate water pressure, adequate slope, drainage?
- Can all spring flow be collected?
- Will the ground provide solid footing for the structure?

4. Survey Team for Field Experience — Time: 30 minutes

Divide the group into three-member survey teams. Distribute Handout 4-2: Sanitary Survey Form and Handout 4-3: Sanitary Survey taken from Water for the World.

Ask the teams to take 30 minutes to plan how they will go about collecting the information under each of the five criteria they have just worked with. Suggest using the information generated in the preceding exercise as well as the survey form to plan how they would collect this data, what they would look for, who they would interview and what questions they would ask.

(Note to the trainer: During this activity, circulate from team to team, offering help and assistance wherever needed.)

5. Preparation for Field Task — Time: 30 minutes

This field task is planned to take approximately three hours. The field trip will consist of the following:

Field Activity No. 1: Demonstrating How to Measure Spring Flow (for the total group at a spring site)

Field Activity No. 2: Conducting Surveys (by the three-member survey teams)

Explain to the group the purpose of the field task, the learning objectives, and the time involved.

Survey teams will be expected to accomplish these tasks. (Put these tasks on a flipchart.)

- Measure and calculate the flow of the spring.
- Locate areas and sources of contamination.
- Interview spring users at the site to obtain desired information.
- Visit at least one home to interview a family to collect desired information.
- Add appropriate information to the village map.
- Document and take notes on their findings.

Each survey team will require these materials:

- A watch with a second hand or alternatively the teams should be told how to count their breaths or heartbeat as a way to measure time
- A short piece of pipe or bamboo
- A container of known volume
- A clear bottle
- The village map and writing materials

The trainer will need to have done a good deal of preparation ahead of time to make certain the field experience is effective. The following require advance planning:

- Discuss the field work with village leaders and obtain their permission to do it.
- Draw a village map and make a copy for each participant.
- Arrange for a guide from the village if necessary and translators if language is a problem.
- Determine which homes to visit and locate them.
- Select the springs the survey teams should visit; try not to have all the teams visiting the same springs.
- Prepare for the demonstration of how to measure flow. Have clay available at the site as well as other necessary materials.
- Have materials that trainees require ready for use.
- Arrange for transportation.

Explain how and where the survey teams will do their work. Remind the trainees that the first activity is for the whole group, observing the trainer demonstrate how to measure the flow of the spring and the second activity is in three-member teams. Distribute materials and tell trainees when they are expected to return for the workshop discussion session.

6. Field Trip — Time: 3 hours

Field Activity No. 1: Demonstrating How To Measure Spring Flow (20 minutes)

Explain that there are three basic steps in measuring spring flow:

- Build a temporary dam of clay or other impervious material.
- Insert a pipeline.

- Collect water in a container for one minute.

Proceed with blocking the entire spring flow with a clay, dirt, rock, etc. dam high enough to insert a short pipe and still have space below for a collection container. (Be sure to seal the leak on the upstream side of the dam.)

After the flow becomes steady, ask one group to volunteer to measure the flow in liters per minute. Do this two to three times to witness variations and determine an average flow.

Answer any questions. Take apart the clay dam and pipe and ask the survey team to practice this measurement separately some time during the field trip. Distribute handout on measuring flow either at this point or upon returning to the workshop (Handout 4-4).

Field Activity No. 2: Conducting Surveys (2 hours 30 minutes)

Have the teams proceed to their survey tasks.

7. Field Trip Discussion — Time: 30 minutes

Lead a discussion of these questions:

- Elicit general comments on how the field activities went. Were they useful? Keep the comments brief and spend no more than five to eight minutes on this opening point.

- Ask several teams to comment on measuring spring flow. Did they have any problems? Any interesting or unexpected occurrences?

- Ask what sources of contamination they located. Did they inspect the quality of spring water? If so, how can the sources of contamination be eliminated?

- Find out what questions the trainees asked and to whom at the spring site. What information did they obtain? Any problems or unexpected occurrences?

- In visiting the home, how did the trainees find the family members stored their water? Was it handled in a sanitary way? Find out how the trainees determined the volume of spring water the family used per day?

- Did trainees have any problems in using their maps?

- Ask individual trainees if they would recommend the spring they surveyed as suitable for capping? Why or why not?

8. Conclusions — Time: 15/20 minutes

Move toward reaching some conclusions about the entire process of surveying and collecting data for spring site selection. Ask the trainees to identify from their experience what they believe must be done in order to conduct a valid

survey and make the "right" decisions about which springs to improve. The trainer might want to list their responses on a flipchart.

9. Applying Principles of Surveying and Data Collection for Site Selection — Time: 30 minutes

Have the trainees take a few minutes to plan how they will conduct surveys in their first spring capping project. Ask them to work individually on this plan using their planning guides. Give them 15 minutes, then ask them to choose one other person and share their plans and strategies with each other, offering help and suggestions to each other as appropriate. The sharing activity will require 15 to 20 minutes.

10. Closure — Time: 5 minutes

Refer back to the session objectives. Ask the trainees if the objectives have been met and if they will be able to conduct surveys on their own.

MATERIALS

Flipcharts for:

- Session objectives
- Lecturette points
- Tasks for survey teams

Handouts on:

- 4-1: Lecturette Notes: Selecting a Spring for Capping
- 4-2: Sanitary Survey Form
- 4-3: Sanitary Survey (Water for the World article)
- 4-4: Flow Measuring Techniques

Advance Planning

- Arrange for field experience with village.
- Draw map of village and have copies for participants.
- If necessary, arrange for guide and/or translators.

LECTURETTE NOTES: SELECTING A SPRING FOR CAPPING

1) Is the flow adequate? The spring has an adequate flow if it can provide enough water for at least the daily drinking water needs of the user group or village. Steps for determining this are to measure the flow of the spring to arrive at the total volume produced in one day and divide this by the number of people to be served by the spring. We will do this measurement this afternoon. By measuring the flow you obtain the number of liters available for use per person per day. Then compare this amount to the minimum standard of 15 liters per person per day to determine if the spring flow is adequate or not.

   Remember animals may be watered from this spring also. The following are approximate minimum water needs per animal: cows 10/15 liters; buffalo 15/20 liters; goats 5/10 liters; chickens 5 liters per dozen.

2) Is the spring flow reliable? A spring flow is reliable only if it is constant and adequate through both wet and dry seasons for many years.

3) Is the water safe to drink? Remember that spring water is often the best quality nature has to offer. It is continuously flowing from a source underground which has been purified by slowly filtering through many meters and layers of soil. However, it must be uncontaminated by pit latrines and other sources of human waste, livestock, fish ponds, food processing (for example manioc soaking and fermentation), bathing, washing, surface water runoff, and flooding.

4) Is the water convenient and accessible to the users? A spring should be as close to the users as possible to minimize the daily work required by the women and children to collect and haul water. Difficult and hazardous crossings should be avoided, for example, roads, log bridges, or infested waters.

5) Is it technically feasible to cap the spring?

   In determining if it is technically feasible to cap a specific spring, there are several factors to be considered.

   - A spring should have an adequate slope for proper drainage.
   - It should have protection from flooding and diversion of watershed runoff.
   - The slope should be steep enough so that a collection vessel can be placed underneath the discharge pipe.
   - Labor and materials such as gravel, rock, sand, and clay should be locally available.
   - There should be a solid footing on well-drained ground for the structure.

 Previous Page Blank

SANITARY SURVEY FORM

1. Village _____

2. Location _____

3. Village leader(s) _____

_____

4. Village population _____

Animal population and water needs _____

5. Number of families _____

6. Health center or organization _____

_____

7. Name of spring _____

_____

8. Distance from village _____

_____

9. Location of spring (distance from users) _____

_____

10. Slope _____; flow _____ (lpm)

accessibility _____

11. Number of people using spring _____;

average number of litres per day per person _____

12. Quality of water _____

_____;

Condition during dry season _____

_____

Condition during wet season _____

13. Soils around spring _____

_____

14. Sources of contamination _____

_____

Previous Page Blank

SANITARY SURVEY

Physical Characteristics of the Location

Springs. Springs can provide a very good source of water for a community supply. Generally, water from springs can be used without treatment if the source is adequately protected with a spring box. Not all water from springs is free from contamination. A sanitary survey of the spring site will help determine whether contamination is likely.

The first step in a sanitary survey of a spring site is to determine the physical conditions above the point where the water flows from the ground. If there are large openings or fissures in the bedrock above the spring, contamination of the spring from surface runoff may occur. Surface runoff enters the ground through the fissures and contaminates the spring water underground.

Find the true source of the spring. Many times, a small stream disappears into the ground through a fissure and emerges again at a lower elevation. What appears to be a spring actually may be surface water that has flowed underground for a short distance. The water is generally contaminated and may flow only during the wet season.

Determine if there are sources of potential fecal contamination. Livestock areas, septic tanks and other sewage disposal sites are sources of contamination. If they are located above the source or closer than 100m to it, contamination may occur and disease-causing bacteria can enter the water.

The second step in a sanitary survey is to study the area at the spring site. The type of soil may indicate that contamination is likely. Filtration may be poor if permeable soil deeper than 3m is within 15m of the spring. Water passes quickly through coarse soils and impurities are not filtered out. If this condition exists, or if there is any suspicion of contamination, a water analysis must be done.

A spring flowing from limestone or highly fractured rock may be subject to contamination. Earth movements create fissures and cracks in limestone allowing surface run-off to enter the ground rapidly with little or no filtration of impurities. If a spring flows from a limestone bed, check the water after a heavy rain. If it appears turbid, suspect surface contamination and either analyze the water or choose a better site.

Community members must always be consulted during a sanitary survey. Information from local people should be added to the information collected through observation. They will know about spring yields and reliability and about other local conditions.

*Taken from Water For the World - Conducting Sanitary Surveys to Determine Acceptable Surface Water Sources. Technical Note No. RWS. 1, p. 2.

Previous Page Blank

Bacteriological Quality of Water

Good quality water must be available to ensure the health of the people in a community. The bacteriological quality of water is especially important. Water used for drinking must be free from disease-causing fecal contamination. Fecal contamination can be prevented by the protection of water sources, by the removal of sources of contamination, and by the treatment of water. A thorough sanitary survey must determine the potential sources of contamination of a water source so that measures to protect the source can be developed.

An untreated water source should be as free from bacteriological contamination as possible. The greatest and most widespread source of such contamination is human and animal wastes, which is called fecal contamination. A sanitary survey determines the degree to which water sources may be subject to fecal contamination.

Equipment for testing water may not be available and water analysis may be impossible. If so, observation can reveal characteristics that indicate bacteriological contamination. If there is a layer of scum on the water surface, suspect contamination. If excessive algae are growing in a pond or lake, there are organic impurities which may indicate the presence of fecal matter in the water. Speak to local health officials and village leaders to find out if there is a large number of cases of diarrheal illnesses. Many cases of diarrhea, especially among young children, may be an indication of contamination in the water source.

By simple measures such as removing obvious sources of contamination from a catchment area, fecal contamination can be controlled and eliminated. If contamination is not reduced, then the water source should be considered unacceptable.

Physical and Chemical Quality of Water

The bacteriological quality of water is the most important factor in determining the acceptability of a source. Many times, though, water is bacteriologically safe, it has physical or chemical characteristics that make it unpleasant or unattractive to the users. To determine the exact physical and chemical quality of water, laboratory analysis must be done. An evaluation of physical and chemical conditions can be made by doing a sanitary survey. A thorough sanitary survey can detect turbidity, color, odors, and tastes and help determine the acceptability of the water source.

Turbidity. Turbidity is the presence of suspended material such as clay, silt, organic and inorganic material which clouds or muddies water. Turbid water may be potable but often it is aesthetically unacceptable to users. Turbidity may also indicate contamination. A laboratory analysis should be done, if possible.

Color. Dissolved organic material from decaying vegetation and some inorganic material cause color in water. An excessive algal growth may cause some color. Color in water is generally not harmful but it is objectionable and may cause users not to drink the water. Highly colored water needs treatment.

Odors and Tastes. Odors and tastes in water come from algae, decomposing organic material, dissolved gases, salts and chemicals. These may be from domestic, agricultural or natural sources. Water that has a bad odor or a disagreeable taste will be rejected by a community for a different source.

FLOW-MEASURING TECHNIQUES

In most investigations, accurate flow measurements of a source will require some earthwork, usually just a simple type of earth bank, dam, or drainage channel. Thus it is advisable to bring along one or more villagers with digging tools and a machete-type knife (for clearing away underbrush, etc). After the channels or dams have been constructed, wait a few minutes for the water to achieve steady, constant flow, before attempting any measurements.

Discussed below are two simple methods for measuring the flows of springs and streams. Always measure the flow several times, and calculate an average reading. Any measurements which are obviously deviant should be repeated. Question the villagers closely about seasonal variations in the flow.

Bucket and stopwatch: Spring flows are most conveniently measured by using a wide-mouthed container (of known capacity) and timing how long it takes to fill up. A large-size biscuit or kerosene container (capacities of about 18-20 liters), or a bucket, is usually available in the village. For the most accurate results, the capacity of the container should be such that it requires at least 15 seconds to fill (smaller containers, such as one-liter drinking canteens, should only be used if nothing larger is available). An ordinary wristwatch (that has a sweep-second hand) can be used for timings, but it is best in this case if two persons work together: one concentrating on the wristwatch, the other filling the container. The flow is calculated:

$$Q = \frac{C}{t}$$

where: Q = flow (liters/second)

C = capacity of container (liters)

t = time to fill (seconds)

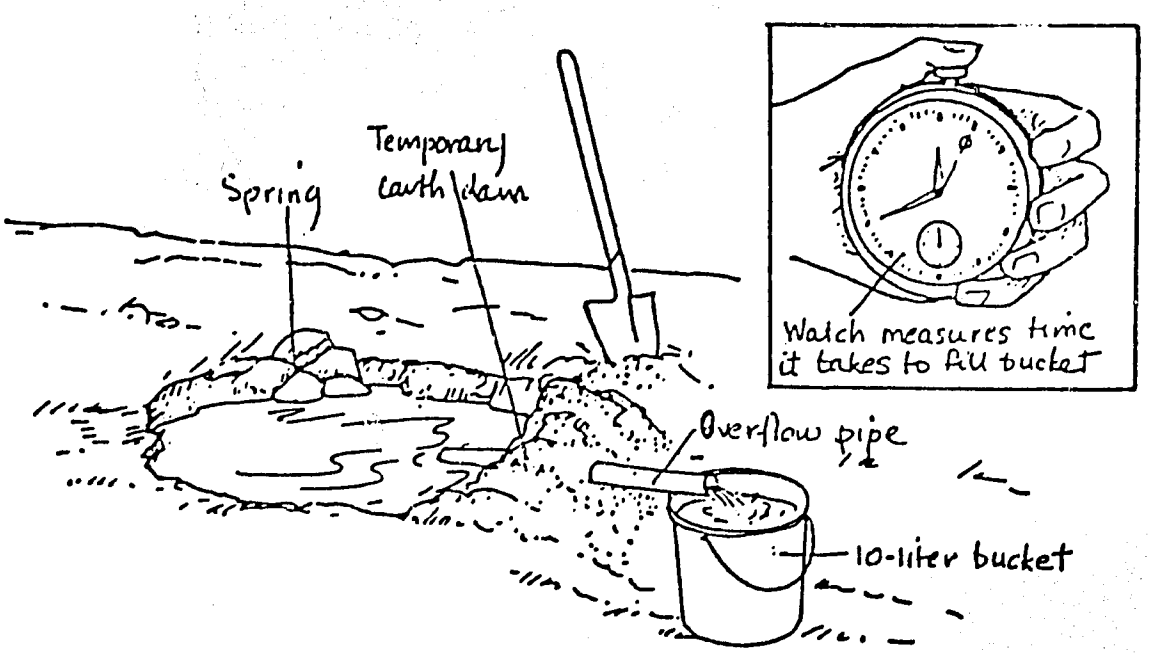

taken from: T.D. Jordan, Jr., Gravity-Flow Water Systems, UNICEF, Nepal

Velocity-area method: This method requires more work and is not as accurate at the V-notch weir, yet for particularly wide streams it can be easier to use. Measure the surface water velocity of the stream by timing how long it takes a drifting surface float (such as a block of wood) to move down a measured length of the stream (this measured section must be fairly straight and free of obstacles, for a length of 6-10 times the average water depth). Measure the cross-sectional area of the stream. The measurements should be repeated several times, averaging the results together. The average stream velocity is 85% of the surface velocity, and the flow is calculated:

$Q = 600 \times V_s \times A$ where: Q = flow (LPS)

V = surface velocity (m/sec)

A = cross-sect'l area (m^2)

This method of flow measurement is applicable to streams of water depth of at least 30 centimeters. Figure 2-3 illustrates the velocity-area method of measurement.

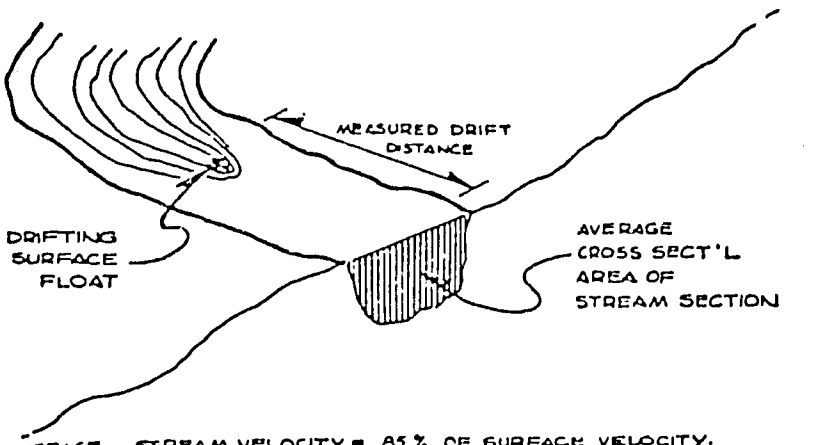

AVERAGE STREAM VELOCITY = 85% OF SURFACE VELOCITY.
MEASURED DRIFT DISTANCE SHOULD BE 6-10 TIMES AVERAGE DEPTH.

FLOW Q = V·A·850

Q = FLOW (LPS)
V = SURFACE VELOCITY (METRES/SEC)
A = CROSS SECT'L AREA OF STREAM (M^2)

FIGURE 2-3 VELOCITY-AREA METHOD OF FLOW MEASUREMENT

SYNOPSIS

SESSION 5: PREPARATION FOR SPRING DEVELOPMENT CONSTRUCTION ACTIVITIES

Total Time: 5½ hours

PROCEDURES	TIME	HANDOUTS	FLIPCHART MATERIALS
1. Introduction	5 min.		Session Objectives
2. Brainstorming/ Planning	20 min.		
3. Project Familiarization	30 min.	5-1: Photographs of Spring Development 5-2: Retaining Wall Structure	Spring Improvement Items Criteria Used to Determine Improvement
4. Introduction of Planning Steps	10 min.		Six Basic Planning Points
5. Lecturette/ Discussion	60 min.	5-3: Dimensions 5-4: Reinforcement Rods in Foundation	Dimensions of Depth, Thickness, Width
6. Field Work Preparation	10 min.		
7. Field Work	60 min.	5-5: Materials and Components 5-6: Materials Required	Pipe Selection Considerations
8. Group Discussion	90 min.		
9. Generalization/ Application	45 min.	Planning Guides (see Handout 2-5)	
10. Closure	5 min.		

SESSION 5: Preparation for Spring Development Construction Activities

Total Time: 5½ hours

OBJECTIVES

At the end of this session, trainees will be able to:

- Describe how the improved spring will look upon completion
- Describe in general the construction phases necessary for project completion
- Size and design the foundation and retaining wall
- Estimate the tools and of materials needed for capping a spring

OVERVIEW

Learning how to implement a spring development project is best accomplished by working on actual projects. Therefore, this course requires building a spring capping system, and the construction stages will begin tomorrow. This session is intended to familiarize the participant with the spring project selected for this training and to involve the participant in the appropriate planning and design steps necessary before construction is begun.

The trainees will visit the project site and participate in the pre-construction planning activities such as 1) estimating and completing a preliminary design of the spring wall, 2) estimating the proper location of this wall, and 3) planning for other resources and improvements that are included in this particular project.

PROCEDURES

1. Introduction — Time: 5 minutes

Give the information contained in the overview, present the objectives, and respond to questions.

2. Group Brainstorm of Planning Items — Time: 20 minutes

Have the group brainstorm a list of items necessary for planning a spring development project. Write their responses on the flipchart, then ask them to compare their list with the project cycle (Handout 2-3). Explain that the project cycle is one way to organize the activities required to complete the project. Ask if they see activities from their list that should be added to the activities listed in the cycle. If so, add them. It is important that the group develop a sense of familiarity and involvement with the project cycle. Add their suggestions to the cycle, but avoid making major changes.

Explain that today's workshop activities will deal primarily with preparation for the construction phase of the project. Ask trainees to refer to the project cycle

Previous Page Blank

for construction activities. Briefly, explain again that the following three days of the workshop will be spent learning about construction activities.

3. Group Familiarization with this Project Time: 30 minutes

If the participants have visited the spring that will be developed in this training project, ask them to describe the spring as they remember it. Using a flipchart, explain that the decision has been made to improve this spring in the following ways:

- Construct a wall to dam up the spring and make a collection pool.
- Protect pool from contamination.
- Place a pipe which will allow water to flow into collection/carrying vessels.
- Construct a concrete splash pad and possibly a laundry pad for user convenience.

Using a flipchart, explain the criteria that were used to make the decisions about the spring improvements.

- A spring structure would not be too difficult to build.
- It can be constructed with locally available materials.
- There is a locally available labor force with the necessary skills.
- The structure will adequately handle the flow of the spring all year round.
- The improved spring will benefit users.
- The structure is not too expensive; the community can afford it.
- The community agreed with the plans.

Distribute Handout 5-1: Photographs of Stages of Spring Development. Briefly explain the stages to the participants.

Distribute Handout 5-2: Retaining Wall Structure. Explain drawing. In addition, distribute (or draw on flipchart) a map of this spring site, pointing out key features.

4. Introduction of Planning Steps Time: 10 minutes

Explain that for purposes of organization, the planning for construction will involve six basic planning points. Using a flipchart, elaborate briefly on each.

- Investigation of spring site
- Determining location and design for spring structure

- Pipe, materials/tools required
- Labor requirements
- Costs/budget for project
- Time schedule

Explain that the first step, investigation of springflow and excavating, will actually occur tomorrow when layout and excavation for construction will begin. After these activities have been completed, the decision about the exact size and location of the foundation and retaining wall can be made. At this point, until the spring is dug out and excavation is made, the design and location can only be estimated. Explain that all planning and preparation for labor, materials, tools, costs, budgeting, and time scheduling are items that should be done ahead of time, but in this case will be done out of sequence to allow excavation to begin.

Explain that for purposes of this course, a training session on how to plan for labor, materials, etc., will be conducted after trainees have had practice actually constructing the retaining wall. Comment on how much more meaningful the planning of resources will be once they understand what is involved in the actual construction.

Explain that today's activities will concentrate on understanding different wall and foundation designs and the criteria used in determining which design to use.

5. Lecturette/Discussion on Retaining Wall Designs — Time: 60 minutes

Ask the trainees to refer back to Handout 5-2 showing a drawing of a retaining wall and its foundation. Check to see if they understand each part of the structure.

Dimensions

Distribute Handout 5-3: Dimensions for Foundation and Retaining Wall and discuss it with the participants, explaining the various dimensions.

Explain that you are now going to give them a minimum standard dimension for building retaining walls. This is the smallest structure that one would ever design; it would handle average flow rates of from 15 to 50 liters per minute (lpm).

Given this flow rate, the minimum dimensions to use in the reinforced concrete foundation would be 15 to 20 cm high and 40 to 50 cm wide. Have everyone approximate these dimensions with their hands.

Reinforcement

The 8-10 mm steel reinforcement rods should be placed as shown in Handout 5-4: Reinforcement Rods in Foundation. Alternative metals, bamboo, or other strong materials can be used. Tell trainees to use these model dimensions for most springs, until they become more familiar with variations in spring sites. At that point they may want to modify the sizes and designs of their structures.

Construction Materials

Two sacks of cement are needed to construct the model foundation for a rock and mortar wall one meter long and 60 cm high. Five sacks would be needed to construct the foundation for a wall two meters long and one meter high.

The entire wall could be constructed of reinforced concrete. However, the reinforced concrete foundation is to support a rock and mortar retaining wall so that the participants will gain experience in both construction techniques. If cement and reinforcing bars are in short supply, then the foundation can also be constructed of rock and mortar for retaining walls up to 1 meter in height. It is important for the wall to be securely connected to the foundation. The weight of the retaining wall will be distributed evenly over the dimensions of the foundation if the foundation is laid level into the ground. Therefore, given a standard size for the height and width of the foundation, the wall can actually be any length since its height does not vary greatly.

(Demonstrate points by referring to handout or by drawing illustrations on the flipchart.)

Explain the difference between a cement-mortared stone wall and a wall constructed using local mud mortar. It is likely that local houses will be constructed with mud-mortar walls, and that local masons will be more experienced with mud mortar than with cement mortar.

Cement mortar and concrete are used for water supply construction because these materials are strong, durable, and resistant to weathering. Local mortar made from clay or mud will usually erode when exposed to the force of running water. Also, local mortar is usually not strong enough to withstand the pressure which may be created in a spring capping structure.

While concrete and cement mortar have advantages in strength and durability, these materials are more difficult to mix and apply and curing is different than for mud mortar. For example, the ratio of water to cement, the time in which the wet mortar can be used before it starts to harden, and the purity of the water and sand are all critical factors. Local masons should be alerted to the critical differences and should be instructed in the use of cement mortar.

Force Exerted on Wall

Explain that the springflow exerts force on the retaining wall. Discuss consequences of rainy season flow. Explain how the water will try to push over the wall, so it must extend deep enough into the earth and be wide enough to resist and not shift its position. If the foundation is 10-15 cm deep into an impermeable layer, and both the wall and foundation extend 30 cm into the earth on each side, then the structure should remain solid.

Splash Pads

Splash pads are located under the pipe so the continuous flow falls on concrete or rock runoffs that have been constructed so that the water drains away from the foundation. Splash pads can be various sizes and designs depending on the design of the wall, the amount of materials available for construction, or what the villagers feel would be most useful to them.

The most important issue concerning splash pads is drainage. The water must flow away from the foundation toward the drainage ditches. It is also more sanitary as well as convenient for the users if the area around the collection pipe is not muddy and sloppy.

Splash pads could be the same length as the foundation or small enough to merely cover the splash point. Whatever the size, the concrete should slope toward the drainage ditch. Some splash pads are built with curbs which can actually channel the water right to the ditch.

Pipes

When delivering this part of the lecturette, demonstrate a sample of the pipe and materials to be used in construction.

The following list includes the dimensions, placement, and materials to be considered in the selection and construction of piping to carry spring water:

- The diameter of the pipe will depend on the quantity of spring flow it is to carry.
- The pipe will be at least long enough to pass through the spring capping structure wall and project beyond the wall to form a convenient spout.
- The length of pipe may extend some distance from the spring capping structure to a public tap.
- Only galvanized iron pipe should be placed in a concrete or cement mortar wall. If a pipeline is built to a tap some distance away, then PVC (polyvinyl chloride) or HDP (high density polyethylene) should be installed below ground.

The following pipe sizes can be used for short (up to 1 meter in length) galvanized iron pipes set in a spring retaining wall.

Maximum Spring Flow	Pipe Diameter
lps	mm
up to 1.0	30
1.1 to 3.0	50
3.0 to 7.0	60

Two or more smaller pipes can be used in place of one larger pipe.

Placement and protection of pipe is important if the project is to have a useful life of 10 or more years. Pipe materials have different properties.

PVC and HDP plastic pipe of standard quality will resist corrosion. However, the plastic may be softened or made brittle by sunlight or sliced accidentally. It must be buried at least 0.7 meters underground. PVC pipe comes in rigid lengths; HDP comes in long flexible coils. Both are lightweight for transport.

In galvanized iron pipe, the galvanizing provides a corrosion-resistant zinc coating on the iron pipe. Although iron pipe is rigid and heavy to transport, it is much stronger structurally and less susceptible to being damaged by sharp or heavy loads.

Bamboo Pipe is cheap and may be used as a temporary substitute until galvanized iron, PVC or HDP pipe becomes available. If properly cured by soaking, flaming and scraping, bamboo will provide long term service; otherwise it will rot in a few years.

Pipes should be located as shown in Handout 5-2.

The spring should be accessible for cleaning, unclogging, or repair at a later date.

6. Preparation for Field Work — Time: 10 minutes

Explain that today's field work consists of sizing and designing the foundation and wall structure

Field Activity No. 1: Designing the Foundation and Wall Structure (60 minutes). The trainer should divide the group into four teams. Ask two of the teams to find answers to these questions (put questions on the flipchart):

- Where is the impermeable layer?
- How deep should the foundation be?
- Where should the foundation be placed?
- How wide should the foundation be?
- Will our minimum width dimension fit these?

Ask two other teams to answer these questions:

- Where is the bottom of the collection pool?
- At what height will the pipe go through the wall?
- Where should the wall be?
- Will there be room under the pipe for a collection vessel?

(Note to the trainer: The trainees may have some difficulty answering these questions. Discovery is, however, a key aspect of the training methodology and you should let them do the best they can.)

Depart for field site.

7. Field Work — Time: 60 minutes

Give the trainees 30 minutes to find the answers to the questions. Then lead a discussion at the field site on their responses. Demonstrate how they could arrive at an answer or ask them how they arrived at their answer. Make certain

everyone understands how one arrives at answers to these questions. This discussion is likely to take 30 minutes.

Return to the workshop site.

8. Group Discussion on Planning for Tools and Materials — Time: 90 minutes

Explain that for purposes of planning for the necessary tools and materials, the spring capping system will be divided into specific components. Put the components on the flipchart and briefly explain each (10 minutes).

Excavation
Diversion ditches and canals
Foundation
Retaining wall
Splash pad
Watertight seals for retaining wall
Backfill
Watertight sealed layer to prevent surface contamination

Ask the participants to form two-member teams for the following task which you have put on the flipchart:

> List the tools and materials which you believe will be necessary to do the work required for each of these four components:
>
> Excavation
> Diversion ditches and canals
> Foundation
> Retaining wall

Give trainees 15 to 20 minutes for this task. Then ask that each two-member team join with one other team, making small groups of four. They are to share their materials and tools list with one another. Then ask the small groups to concentrate their energies only on one component (assign one to each small group) and to list the tools and materials required for that component on a piece of flipchart paper. Give them an additional five minutes or so for getting this list on the flipchart.

Post the flipchart papers on the wall and lead a total group discussion of the materials and tools listed. This total group discussion should not take more than 15 minutes.

Distribute Handout 5-5: Materials and System Components. Explain to the trainees that this is a list they could use; however, they should check the lists on the flipchart to see if there are items they had identified as important that might not be included in the handout. Give them a few minutes to read the list. Ask if they have any comments or questions. Ask if there are any tools or materials with which they are not familiar, such as a sifting screen. Encourage discussion of these items if people have questions.

Distribute Handout 5-6: Quantities of Materials Required for an Average Size Retaining Wall Structure. Give the trainees a few minutes to read over this list. Ask if they have any questions.

9. Generalizing and Applying Time: 45 minutes

Ask the trainees to reflect on the day's activities and to identify the most important things they learned. Give them five minutes or so of quiet time to reflect on the day. Then ask for examples of one or two items from each individual. Write them on the flipchart. Take about 15 to 20 minutes for this.

Then ask the trainees, working individually, to complete a planning guide for this session, Preparation for Construction Activities. Allow 20 minutes for this individual activity.

Use an additional 10 minutes or so to elicit examples of their planning. This question could be used: "As you thought through this, what important problems or ideas came to you about implementing this planning activity in your community?

10. Closure Time: 5 minutes

Refer to the objectives, check to see how they feel about their skill development for the day, and close the session.

(Note to trainer: You might want to ask the participants how they feel about the workshop so far. Ask if they have any questions about the methodology or if they have suggestions on what the trainers can do to make their learning more productive. This helps set the tone for trainer/trainee collaboration in making the workshop effective. It also allows trainees to ask direct questions about the methodology. Concerns or issues can be discussed early in the course before they become problems.)

MATERIALS

Flipcharts for:

Session objectives
Spring improvement items
Criteria used to determine spring improvement
Six basic planning points
Dimensions of depth, thickness, and width
Considerations for selection of a pipe

Handouts:

5-1: Photographs of Stages of Spring Development
5-2: Retaining Wall Structure
5-3: Dimensions for Foundation and Retaining Wall
5-4: Reinforcement Rods in Foundation
5-5: Materials and System Components
5-6: Quantities of Materials Required for an Average Size Retaining Wall Structure

PHOTOGRAPHS OF STAGES OF SPRING DEVELOPMENT

Figure A. Building the Forms for the Foundation

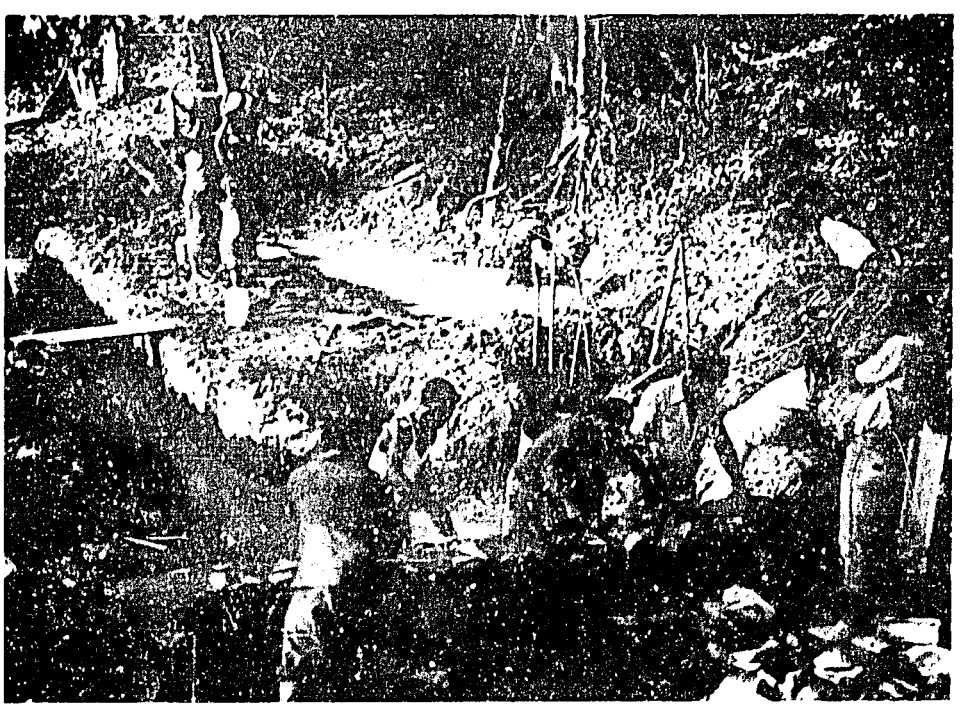

Figure B. Building the Rock and Mortar Wall

Figure C. Pouring Concrete for the Foundation

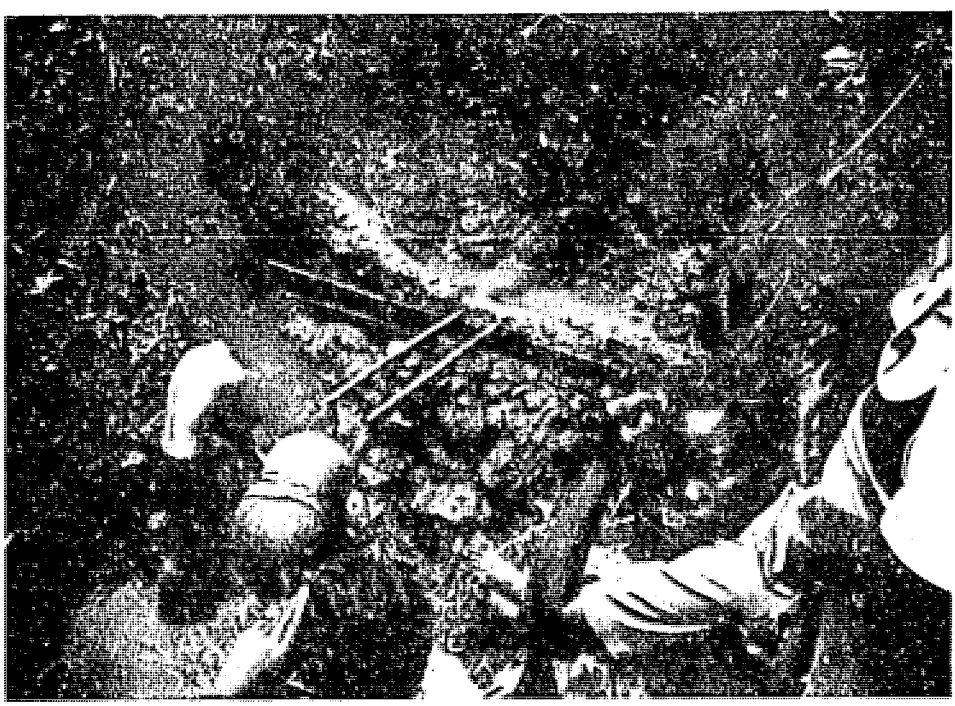

Figure D. Clay Wall To Keep Construction Area Dry. Pipes Diverting the Flow

Figure E. Building Rock and Mortar Wall

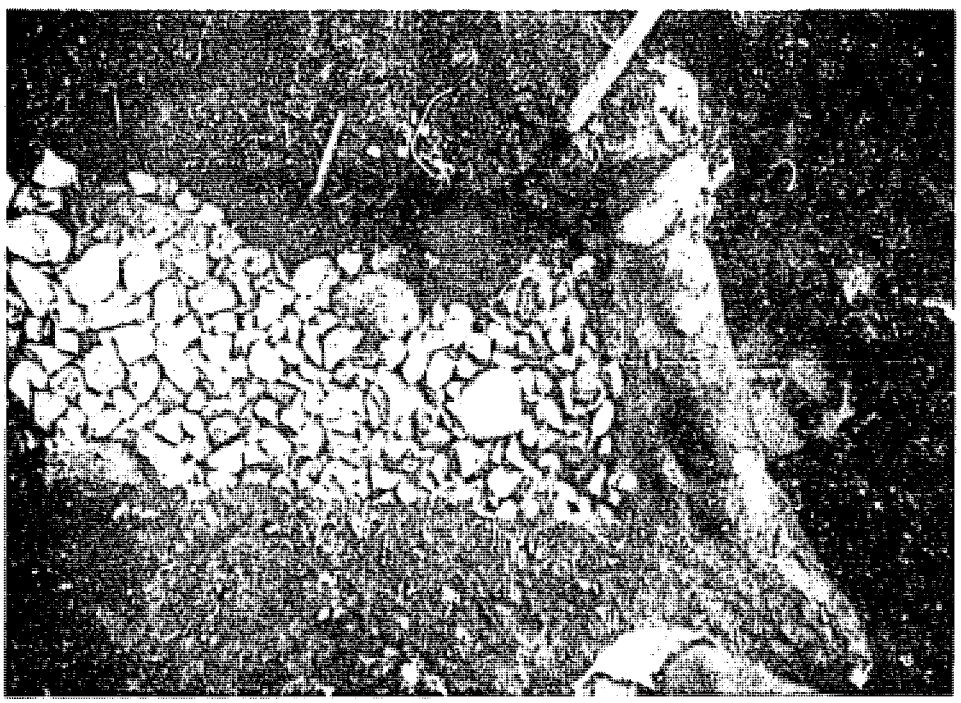

Figure F. Nearly Completed Retaining Wall, Showing Rock and Gravel Fill-in

RETAINING WALL STRUCTURE

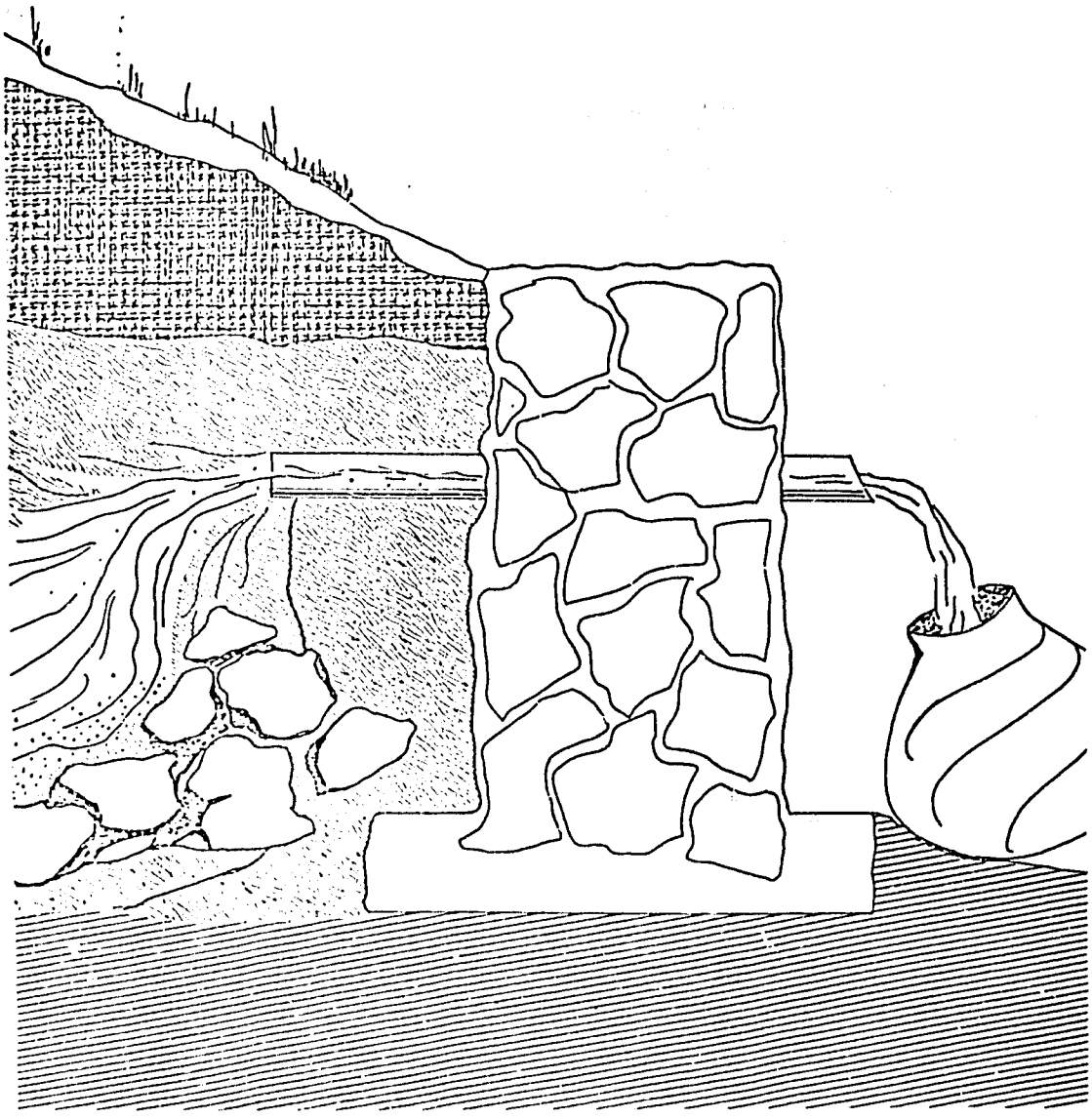

Previous Page Blank

DIMENSIONS FOR FOUNDATION AND RETAINING WALL

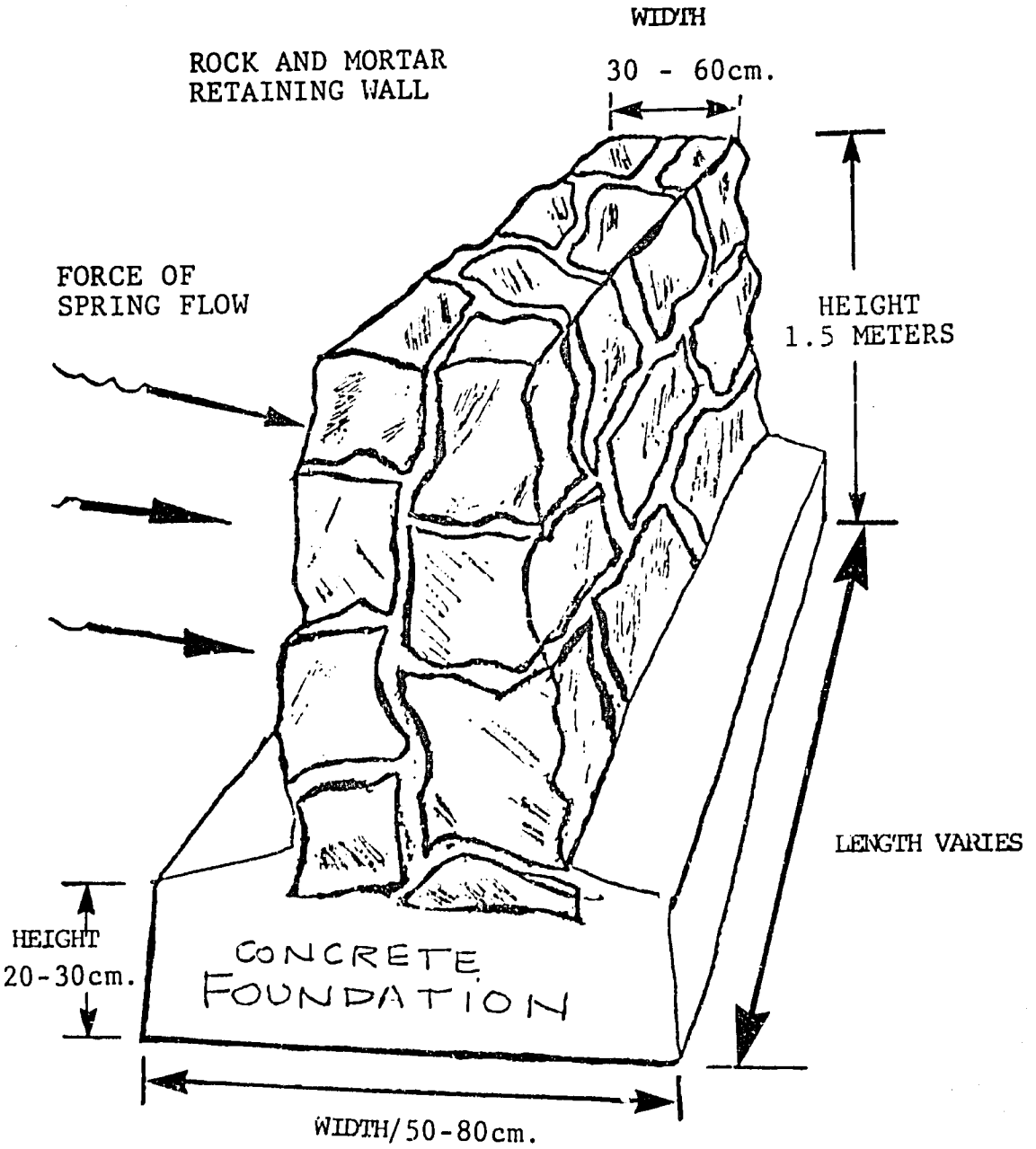

Previous Page Blank

REINFORCEMENT RODS IN FOUNDATION

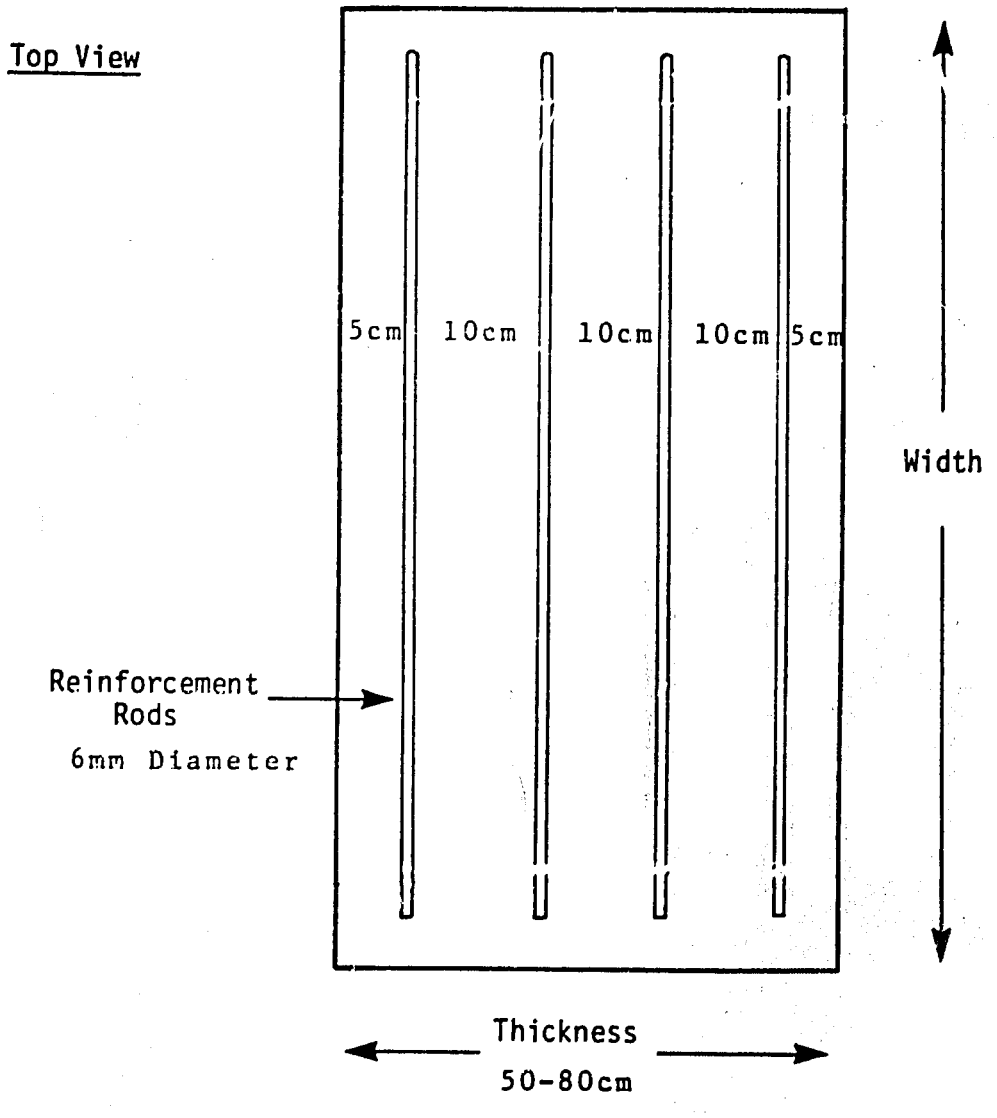

Previous Page Blank

MATERIALS AND SYSTEM COMPONENTS

System Components	Materials and Tools
• Excavation	. picks . shovels . wheelbarrow . measuring tape or rods
• Diversion ditches and canals	. picks . shovels . wheelbarrow . gravel/rocks
• Foundation	. water . cement . sand . gravel . rocks . reinforcement . nails/hammer/saw . wood for forms . oil for lubricating forms . shovels . buckets . sifting screen . tamper (compacter) . trowel
• Retaining wall	. rocks . clay . cement . sand . gravel . galvanized iron pipe . screening for pipe . trowel
• Splash pad	. cement . gravel . sand . wood for forms . flat stone
• Well for temporary containment and diversion of springflow	. clay . rocks

Previous Page Blank

• Watertight seals for retaining wall	• clay • mortar
• Backfill	• rocks • gravel • clay • soil • shovels • wheelbarrow
• Watertight sealed layer (to prevent surface water from contaminating spring flow)	• clay

QUANTITIES OF MATERIALS REQUIRED FOR AN AVERAGE SIZE RETAINING WALL STRUCTURE

Supplies

Cement	10-20 sacks, 50 kg, top grade, dry and powdery
Sand, clean (uniform)	1-2 cubic meters
Broken stone (1 cm diameter)	1-2 cubic meters
Rock, clean	1-3 cubic meters
Reinforcement rods (rebar)	4-6 6 mm rods 6 m in length or 25 m total length
Wrapping wire	5-10 m of 3 or 5 mm flexible wrapping wire
Pipe and appurtenances	50 mm diameter galvanized iron pipe 1 m threaded one end (outlet pipe) 0.7 m threaded one end (drain pipe)
Intake screen with flanged connections	
Plug for drain pipe	
Plastic	1 roll of thick plastic sheeting, 1 m wide x 5 m long
Chlorine bleach	2 gal. or 10 liters
Sturdy rope or cord	1 roll 1-2 cm
Clay	Locate a source for good quality clay as close to the site as possible. (Quantity varies)
Wood for forms and mixing board	Locally available lumber

Labor

1-2 masons

3-5 laborers

Tools

2 spades for digging

1 rake

trowels (1 for every 2 participants)

3 wooden paddles

1 pick axe

1 crowbar

2 saws for cutting forms

1 hacksaw or wire snipper

2 hammers

2 boxes of flat headed nails for building forms

4 plastic buckets of known volume

1-2 wheelbarrows

1-2 measuring tapes

1 sifting screen

1 tamper/compactor

gloves

The above suggested list is, of course, based on estimates and will certainly vary depending upon the size of the spring capping required. These items are usually necessary. However, they may not be readily available. Alternative materials may be substituted if necessary.

SYNOPSIS

SESSION 6: LAYOUT AND EXCAVATION

Total Time: 6 hours

PROCEDURES	TIME	HANDOUTS	FLIPCHART MATERIALS
1. Introduction	5 min.		Session Objectives
2. Lecturette/Discussion	30 min.	6-1: Drainage Canals 6-2: Lecturette Notes	Excavation and Preparation
3. Field Work Preparation	15 min.		
4. Field Work Procedures	3½ hrs.		
5. Discussion	45 min.		
6. Generalization/ Application	45 min.	Planning Guides (see Handout 2-5)	
7. Closure	5 min.		

SESSION 6: Layout and Excavation

Total Time: 6 hours

OBJECTIVES

At the end of this training session, trainees will be able to:

- Dig out an existing spring source to reveal maximum spring flow and area necessary to enclose and capture
- Locate stable foundations (impermeable layer) for installation of spring retaining wall and other structural components of system
- Control and divert surface water and spring flows
- Lay out, level, slope, and excavate spring development design
- Select and lay in place gravel and other loose foundation materials

OVERVIEW

The first activities in the construction phase of the project cycle are those of layout and excavation. In this session activities will be centered around learning how to do this. After a short presentation in the workshop on layout and excavation, the participants spend most of the time in the field.

PROCEDURES

1. Introduction — Time: 5 minutes

Give the information contained in the overview, present the objectives and respond to questions.

2. Lecturette/Discussion on the Steps Involved in Layout, Excavation, and Site Preparation — Time: 30 minutes

Distribute Handout 6-2: Lecturette Notes.

Layout and excavation of the spring site are accomplished in three major steps (put on flipchart):

- Investigate the spring flow.
- Excavate the site for construction.

Previous Page Blank

- Protect and control spring flow during construction.

Investigate the Spring Flow

Springs form when underground water follows the path of least resistance through soils and reaches the surface. In investigating spring flow the first thing to do is to explore the area to determine if this site is the first and only place that this spring flow surfaces. This is done by checking the area above the spring and the area surrounding it to see if there are other sources of water which might be connected to this spring. If there are other sources of water in the area, check to see if these sources could possibly contaminate the spring you intend to cap. You might have to protect the entire area, or the spring that is being capped could be contaminated by other springs immediately surrounding it.

Most people have a respect for nature's mysterious springs and prefer not to disturb them. However, you will need to clear away and drain any mud, rocks, standing water or other obstacles to spring flow in order to release or unify its maximum flow. If the flow is small with little pressure, take care not to plug the flow as it may seek another outlet and disappear.

Springs flow and come to the surface by the force of gravity or from pressures created by the weight of layers of earth. Often in flatter regions there is insufficient height between the spring flow elevation and the ground level for the collection vessel to be placed. Also, there must be enough drop in elevation below the collection point to provide drainage. Wells are usually better in flat terrain.

Excavation of the Spring Site for Construction

The immediate area surrounding the spring flow should be cleared to a depth free of muddy or loose material so that the structure can be attached or placed upon firm, stable soil or rock. The extent of the excavation will depend upon the type of spring construction and the particular physical conditions. It may vary from a cubic meter for small springs with or without slope, to a few cubic meters for larger springs or seeps where the excavation is spread wide to collect several spring flows. (Explain what is meant by a cubic meter.)

In the cases where spring flow is to be retained by a wall or box, a suitable site for the foundation must be excavated and leveled.

Control of Surface Runoff at Spring Site

Often a spring is located in an area which receives surface runoff when it rains. Surface runoff can cause soil erosion around the completed spring retaining wall, and it may damage the wall. In areas with heavy rainy seasons, surface runoff flows can be heavy and damaging.

The site around the spring capping structure should be protected from surface runoff by excavating a drainage ditch around the periphery of the site. The ditch should be laid out in such a way that it can intercept surface runoff and divert it around and away from the site. A typical arrangement is illustrated in Handout 6-1: Drainage Canals.

The size and extent of the drainage ditches will depend on the quantity of runoff that must be diverted. It is best to question the local residents about the need for runoff diversion and the quantity of runoff that can be expected. In locations with heavy rains, ditches with a depth and width of one-half meter or more may be necessary.

Protect and Control Spring Flow During Construction:

The spring opening must be protected from plugging during construction activity. It may be isolated with a barrel or filled with large rocks so the flow can continue between them.

The flow of water must be controlled to keep the construction area dry. A clay wall can be constructed to protect the foundation site, retain water and/or support a temporary pipe to carry the spring flow away from the site.

3. Preparation for Field Work — Time: 15 minutes

Explain that the group will actually be following these three steps just discussed at the spring site today. Time at the site will be approximately three and a half hours. Then the group will return to the workshop site to discuss and elaborate on the implementation of these three steps.

Brief the group on the role and responsibilities of the work force. Explain that the work force will be present today to help with the physical labor involved in laycut and excavation. The trainees will be responsible for planning and beginning the activities. However, the work force will be there to help with the digging.

Explain that there will be four activities during the field work, the first with the total group and the other three assigned to one of three working teams. The activities are as follows:

Field Activity No. 1: Investigating the Spring Flow (Total Group)
Field Activity No. 2: Protecting and Controlling Spring Flow (Work Team 1)
Field Activity No. 3: Controlling Surface Runoff (Work Team 2)
Field Activity No. 4: Excavation of the Spring Site (Work Team 3)

Explain that Field Activities 2, 3, and 4 will occur simultaneously although some preliminary explanation will be given to the whole group on Activities 2, 3, and 4. Divide the group into three teams and assign each team to an activity.

(Note to the Trainer: If desired, the teams can rotate during the field work so all the participants get the opportunity to work on more than one activity.)

Depart for the spring project site.

4. Field Work Procedures — Time: 3½ hours

Field Activity No. 1: Investigating the Spring Flow

Working with the total group, have the trainees explore the area to determine if it is the first and only place the spring surfaces. If there are no other places, ask them what they would have to do if there were. Lead a short discussion on preventing contamination.

Have the trainees locate the spring source, clearing away mud and rocks or draining standing water.

Discuss elevation and slope. Point out ways for the spring to flow into a collection vessel. If the area has adequate slope, discuss how a flatter area could be handled. Ask the participants what type of springs they have in their villages. Ask one or two of them to describe their spring. Then discuss strategies for doing these steps with that type of spring.

Possibly walk to a flat area, pretend that a spring existed there, and discuss ways to investigate the spring flow. If a bottomless barrel is suggested as a tool to measure water levels and the force of the flow, ask how they could do this if they had no such barrel (i.e., surround it somehow with clay or a wood container). The participants should always be encouraged to look for alternative ways of doing things if a particular item is not available.

Field Activity No. 2: Protect and Control Spring Flow

Ask all the trainees for their ideas on how the spring flow could be controlled during construction to keep the area dry. Discuss several alternatives (i.e., clay wall, drainage ditch or both). Determine which method would be most appropriate for this situation.

Have all participants discuss a strategy for keeping the spring opening from getting plugged during construction. Ask them for their ideas on how this ought to be done, explore alternatives, and choose a particular strategy that would be effective for this spring.

Field Activity No. 3: Control of Surface Runoff

Now have all participants discuss how they would plan and execute the surface water runoff diversion ditches needed for protecting the entire site. Ask them for their suggestions and ideas, discuss options, and make a decision about where the ditches should be and how deep.

Field Activity No. 4: Excavation of the Spring Site for Construction

Ask the trainees for their ideas on how the immediate area surrounding the spring flow should be cleared to a depth free of muddy or loose materials so that an actual structure can be built upon firm, stable soil or rock. Lead a discussion on the size of the area of excavation: how large it should be and how deep it should be. Make a decision on what should be done on this particular spring. However, at the same time, share alternative strategies for excavation for another kind of spring—say a bigger spring or a smaller spring. Discuss the size of the labor force needed to do the excavating.

Once these areas have all been discussed and work teams have been assigned to doing the more detailed planning and beginning the labor involved in the activity, the work teams should actually begin doing their work. There will be three separate teams working on three separate activities. The trainers should rotate from work group to work group consulting, offering advice, and answering questions.

The trainers may want to make certain that if a particular situation occurs—a problem or something interesting with any one of those three work groups—the other teams may stop and come over for a few moments to watch what's going on or to discuss that particular problem or situation. This will help all the working teams to learn from each other even though they're not actually doing each one of the activities.

The trainer should allow these actual work activities to continue until the end of the time allotted for work at the spring site. When that time is up, the group should return to the workshop site. Remember to allow time for the labor force to take over the activities of these training teams, allowing time for instructions to be given by the work teams to the labor force. Also allow time for a minimum amount of cleaning up before returning to the workshop site.

5. Workshop Discussion — Time: 45 minutes

Review the major steps for investigating spring flow (looking for where the spring flow surfaces; locating the source, clearing away mud, etc.; and studying elevation and slope). Refer to the activities at the site this morning and ask the trainees if they have any questions about these activities. Another question might be what problems they foresee in doing these activities in the future.

Review the steps in protecting and controlling the spring flow (diverting the spring flow to keep the construction area dry, planning for spring site diversion ditches, and protecting the spring flow opening from getting plugged during construction). Ask the two teams that worked on these tasks to report on their activities. (One team worked on the spring flow diversion canals or ditches and another team looked for ways to protect the flow during construction.)

Review the steps necessary in excavating the site for construction (clearing an area to a depth free of muddy or loose materials so a structure could be placed on a firm stable soil). Ask the work team responsible for this activity to report on its progress.

6. Generalizing and Applying — Time: 45 minutes

Ask the trainees to reflect back on the entire day and all the activities associated with layout and excavation and to identify what important things they learned. Give them five minutes of quiet reflective time before asking for verbal responses. Depending on the time available, use about 15 minutes for this discussion activity.

Distribute the blank Planning Guides (Handout 2-5) and ask the trainees to spend the next 30 minutes planning how they will do excavation and site preparation when they cap their first spring. The trainer should be available for individual consultation at this point.

7. Closure — Time: 5 minutes

Refer back to the goals for this session and close the session. Mention how today's activities will lead to the activities that will be taking place tomorrow.

MATERIALS

Flipcharts for:

Session objectives
Three major steps of excavation and site preparation

Handouts:

6-1: Drainage Canal
6-2: Lecturette Notes: Layout and Excavation of the Spring Site

Construction Tools and Materials

DRAINAGE CANALS

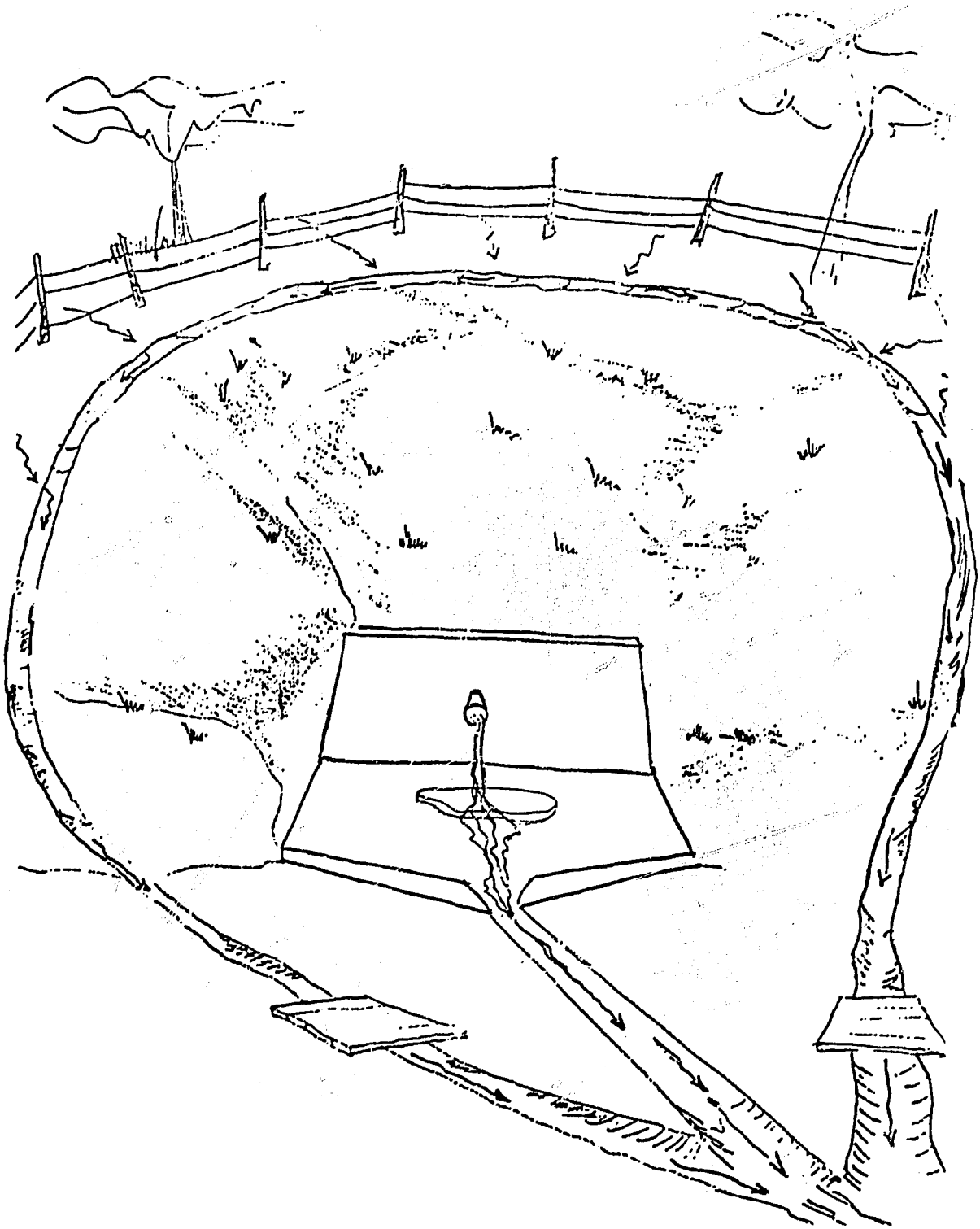

LECTURETTE NOTES: LAYOUT AND EXCAVATION OF THE SPRING SITE

Layout and excavation of the spring site are accomplished in three major steps:

1. Investigate the spring flow.
2. Excavate the site for construction.
3. Protect and control spring flow during construction.

1. Investigate the Spring Flow

Springs form when underground water follows the path of least resistance through soils and reaches the surface. In investigating spring flow the first thing to do is to explore the area to determine if this site is the first and only place that this spring flow surfaces. This is done by checking the area above the spring and the area surrounding it to see if there are other sources of water which might be connected to this spring. If there are other sources of water in the area, check to see if these sources could possibly contaminate the spring you intend to cap. You might have to protect the entire area or the spring that is being capped could be contaminated by other springs immediately surrounding it.

Most people have a respect for nature's mysterious springs and prefer not to disturb them. However, you will need to clear away and drain any mud, rocks, standing water or other obstacles to spring flow in order to release or unify its maximum flow. If the flow is small with little pressure, take care not to plug the flow as it may seek another outlet and disappear.

Springs flow and come to the surface by the force of gravity or from pressures created by the weight of layers of earth. Often in flatter regions there is insufficient height between the spring flow elevation and the ground level for the collection vessel to be placed. Also, there must be enough drop in elevation below the collection point to provide drainage. Wells are usually better in flat terrain.

2. Excavation of the Spring Site for Construction

The immediate area surrounding the spring flow should be cleared to a depth free of muddy or loose material so that the structure can be attached or placed upon firm, stable soil or rock. The extent of the excavation will depend upon the type of spring construction and the particular physical conditions. It may vary from a cubic meter for small springs with or without slope, to a few cubic meters for larger springs or seeps where the excavation is spread wide to collect several spring flows.

In the cases where spring flow is to be retained by a wall or box, a suitable site for the foundation must be excavated and leveled.

Previous Page Blank

3. Control of Surface Runoff at Spring Site

Often a spring is located in an area which receives surface runoff when it rains. Surface runoff can cause soil erosion around the completed spring retaining wall, and it may damage the wall. In areas with heavy rainy seasons, surface runoff flows can be heavy and damaging.

The site around the spring capping structure should be protected from surface runoff by excavating a drainage ditch around the periphery of the site. The ditch should be laid out in such a way that it can intercept surface runoff and divert it around and away from the site. A typical arrangement is illustrated in Handout 6-1: Drainage Canals.

The size and extent of the drainage ditches will depend on the quantity of runoff that must be diverted. It is best to question the local residents about the need for runoff diversion and the quantity of runoff that can be expected. In locations with heavy rains, ditches with a depth and width of one-half meter or more may be necessary.

SYNOPSIS

SESSION 7: FORM BUILDING AND REINFORCEMENT

Total Time: 7 Hours

	PROCEDURES	TIME	HANDOUTS	FLIPCHART MATERIALS
1.	Introduction	5 min.		Session Objectives
2.	Reviewing Plans and Design for the Foundation	10 min.		
3.	Lecturette	45 min.	7-1: Wooden Forms 7-2: Lecturette Notes	Five Tasks for Lay-out and Setting-up Forms
4.	Preparation for Field Work	15 min.	7-3: Splash Pad	
5.	Field Work	4 hrs.		
6.	Discussion	90 min.	Planning Guides (See Handout 2-5)	
7.	Closure	5 min.	8-1: Cement, Concrete and Masonry	

SESSION 7: Form Building and Reinforcement

Total time: 7 hours

OBJECTIVES

At the end of this session, trainees will be able to:

- Find and prepare a stable impermeable location for the foundation and splash pad.
- Measure the depth, width, and thickness for the retaining wall and splash pad.
- Lay out and build wooden forms.
- Shape and place reinforcing materials into structural forms.

OVERVIEW

Once the spring site has been laid out and excavated, the next step in the construction process is to lay out and set up forms for the concrete foundation. The foundation is the system's structural link to the ground. This session will deal with how to design and build this foundation. The labor force will not be needed in this session.

PROCEDURES

1. Introduction — Time: 5 minutes

State the overview and objectives. Answer questions about how the session will be conducted.

2. Reviewing Plans and Design for the Foundation — Time: 10 minutes

Lead a discussion recalling and clarifying the plans (Handouts 5-2 and 5-3) of the foundation. Refer to yesterday's digging or excavating activity in order to review the dimensions of the foundation.

3. Lecturette on Layout and Setting Up Forms for the Foundation — Time: 45 minutes

A foundation is the spring system's link to the ground, its base, floor, or footing. The foundation must also be securely attached to the wall or structure it supports in order to provide holding strength to counter the forces it is built to

Previous Page Blank

oppose or control. In this case the forces from the flow and volume of spring water under the pull of gravity will try to push the wall over or seek ways of getting around or under it. Since the structure must continually oppose these forces, for perhaps 10 years, inspection and maintenance are important to prevent system failure.

There are five basic tasks to complete this construction step. They are (use flipchart):

- Find a solid, stable, impermeable location for the foundation.
- Measure the depth, width, and thickness which will be required for the wall.
- Connect or key the foundation into the earth.
- Lay out and build the forms which will hold the concrete in the desired shape until it has hardened.
- Shape and place reinforcing materials.

Finding a Solid, Stable, Impermeable Location for the Foundation

A common cause of failure of retaining walls is undermining, in which the spring flow forces its way under the foundation and escapes. To avoid this:

- Dig 15 cm down into a solid, stable, and impermeable layer.
- If it is to be on soil, excavate until a stable, impermeable soil is revealed. Excavation to rock is preferable.
- Make the soil or other impermeable layer level so the weight of the structure will be distributed evenly.

Deciding What Height, Length, and Width Will Be Required for the Wall

Review briefly the terms height, length, and width. These three dimensions will obviously vary for different site conditions. These factors should be considered in making this decision:

- The structure to be built
- The flow and force of the spring flow
- The strength and stability of the supporting soils and rock

Based on the above conditions, choose from the model foundations given during the planning and design session.

Connecting or Keying the Foundation to the Earth

Where possible use natural conditions to connect or key the foundation into the earth. Do this by:

- Always removing topsoil from the area and continuing to excavate at least 45 cm below the existing ground surface
- Providing wing walls or supports pushing on the front or outside face of the structure against the natural flow force and gravity

Laying Out and Building the Forms to Hold the Concrete

Lay out and build the forms which will hold the concrete in the shape you want it until it has hardened and attained its full strength and permanent form.

- Select materials which can be cut to fit tightly into the space which you have excavated for the foundation.
- Use wood, sheets of tin roofing, or other rigid materials which can resist and maintain their shape as the wet concrete pushes against them.
- As concrete hardens, it shrinks.
- Concrete is very dense and heavy; 2,500 kg per cubic meter or 150 pounds per cubic foot.
- If the form is constructed above ground realize that the bottom section will try to expand more than the top as the weight pushes down.
- All corners and sides must be securely connected to resist the expansion forces which will seek the weakest point in the form.

Distribute Handout 7-1: Wooden Forms for Concrete Foundation.

Shaping and Placing Reinforcement Materials

Concrete can resist crushing weight, but it can be bent and is brittle and cracks easily. Reinforcement is used to prevent bending or stretching.

Using a piece of an iron rod, ask the participants to try to pull or bend it. It will bend but not break, and it will not stretch. Therefore, as the concrete hardens, it grips and adheres to the ridged rod. Then when force is applied to the concrete, the strength of the rods within it will help it resist.

Reinforcing rod is expensive and often in short supply, but worth getting.

Reinforcement should be provided at a level 2/3 the depth, 1/3 from the bottom, and five centimeters from the surface along the entire width and across the thickness in two, three, or four places.

The reinforcement should be clean and dry and placed or hung so it will be completely covered by the concrete, thus protected from corrosion or destruction by the weather or the spring's waters.

Refer to Handout 5-4 on reinforcement rods in foundation, distributed in Session 5, which shows where reinforcement is placed.

Distribute Handout 7-2: Lecturette Notes: Constructing the Foundation.

4. Preparation for Field Work Time: 15 minutes

Prepare the trainees for the day's field work. Explain that two forms will be constructed. These two forms are:

1) The foundation for the spring retaining wall along with a splash pad for the outlet pipe

2) A laundry pad or a bench as an additional spring site improvement

Today the group will do the layout and build the forms; tomorrow they will mix and pour the concrete. Distribute Handout 7-3: Splash Pad and Spring Flow Drainage Ditch.

The trainees will be assigned to two work groups for the field work. Two-thirds of the trainees should be assigned to construct the forms for the retaining wall and splash pad and one-third to work on the laundry pad. Each work group should develop a work plan for its structure and divide the work accordingly.

The foundation for the wall and the splash pad will be necessary for the spring improvement and the laundry pad (or bench) will be helpful to the users. These two different structures will provide the workshop participants with ample practice to build their skills.

The following activities make up the field work:

Field Activity No. 1: Preparing a Solid Impermeable Layer for the Foundation. (One group will work on the foundation and splash pad area, the other on the laundry pad or a bench area).

Field Activity No. 2: Locating and Sizing to Adequate Height, Length, and Width

Field Activity No. 3: Laying Out and Building the Forms to Hold the Concrete

Field Activity No. 4: Shaping and Placing Reinforcement Materials

Assign the trainees to work groups. Explain that today the field activities will center around the layout and form building for two structures: the foundations for the spring retaining wall and the splash pad and the laundry pad (or bench). The activities will be occurring simultaneously.

(Note to the Trainer: Because the foundation and splash pad are next to each other, one group is suggested to work on both of these.)

5. Field Work Time: 4 hours

Field Activity No. 1: Preparing a Solid Impermeable Layer for the Foundation

Have one work group prepare the foundation area for the spring wall and splash pad and the other the "practice" foundation for the laundry pad. The dimensions for the form for the laundry pad are 1 meter square and 15 cm deep.

Explain the concept behind using the laundry pad as "practice." In order to give more participants practice in preparing a foundation in the ground, the laundry pad will be set into the ground in the same way as the foundation for the wall.

Remind each of the groups of the dimensions of their structure. Then have them begin to locate the impermeable layer. Guide them through the necessary steps -- finding an impermeable layer, and leveling so the weight can be evenly distributed. Also help them determine the depth to which they should dig.

Explain that they should make a reasonable attempt to reach an impermeable/stable layer; however, they should go down no more than 1 meter. If no solid layer is reached, create a solid one by adding a layer of broken stone and gravel. Explain that the group working on the laundry pad should not have to dig more than 50 cm deep to reach the impermeable layer.

After the groups have completed this task, have all trainees view and discuss each work project. Have a person from each work group explain and report on the work.

Field Activity No. 2: Locating and Sizing to Adequate Height, Length, and Width

Have the two groups determine the height, length, and width of their structure. The spring wall group will refer to the decisions made during Session 5, Planning for Spring Development Construction, or during this session's lecturette. The laundry pad group members can determine their own dimensions.

Explain and demonstrate to both groups at the spring site how height is determined. It is determined by considering how much support the wall will require, how far into the ground one must go to get a good footing into the impermeable layer, and how high the foundation must be in relation to the depth of the water.

Explain and demonstrate to both groups that the height of the foundation should be 15 cm to 20 cm below the excavated spring level.

Explain and demonstrate to all the participants how the foundation is connected or keyed into the ground. Demonstrate how other types of support could be built.

In climates without freezing conditions and where there is stable soil or rock, the following general guide can be used for small spring retaining walls.

Total Height of Wall-cm	Width of Wall-cm	Depth of Foundation-cm	Width of Foundation-cm
0.5	30	20	50
0.5 to 1.0	45	25	65
1.0 to 1.5	60	30	80

Refer back to Handout 5-3 for a picture showing the wall dimensions.

After the groups have calculated how they will size the structure and to what depth they will excavate, have them share their calculations with each other and explain why. Discuss this with them, and make any necessary adjustments.

Begin digging.

Field Activity No. 3: Laying Out and Building the Forms to Hold the Concrete

Assemble both groups for a short discussion of form construction. Ask the following questions:

- What kind of materials can be used to construct forms?
- Will these materials be able to resist stress and maintain their shape as the concrete expands?
- How is the bottom section of the form constructed differently than the top? Why?
- How are corners constructed? Are they strong enough?
- How is reinforcement added to the structure?
- How is the structure braced?

After the discussion have each team return to its worksite to construct the forms.

Guide and assist the groups when needed, but be careful not to do the work itself. Watch to see that the work groups are sharing the work and that everyone is involved. Remind the groups that individuals learn more when they are doing than when they are watching. So, they should take turns doing.

When the structures are complete, have each group inspect the other group's work and offer suggestions or help if they see problems. Remind them to watch the corners. Are they strong enough? Watch to see that the bottom of the form is strong enough to handle the increased pressure.

Field Activity No. 4: Shaping and Placing Reinforcement Materials

Have all the groups plan how to place the reinforcement and then do it. Rebar should be used for the foundation and splash pad area and laundry pad so each group gets practice.

When they are finished, have the groups review each other's work, ask questions, and engage in discussion. Remind them to note where the reinforcement was located and if the reinforcement is hung in such a way so as to not touch the form and be completely covered by concrete.

Return to the workshop.

6. Workshop Discussion — Time: 90 minutes

Have the group divide into two-person teams, one from each of the two work groups for the day. Give them the following task which you have put on a flipchart:

From your field activities for the day, discuss together these points:

- What surprises did your work have for you?
- What problems did you encounter?
- How did you resolve them?
- What other problems could you anticipate having?

Allow 20 minutes for this discussion.

Then lead the total group of trainees in a discussion on the above questions. Ask for examples of problems they had and how they resolved them. Move the discussion to anticipated problems. Discuss solutions to these situations. Allow this discussion to take up to 20 minutes.

Ask them to identify what they believe to be the essential steps in building forms and reinforcement for concrete foundations. Put their items on the flipchart. Take no more than 15 minutes.

Have the trainees work with their planning guides for 15 minutes.

7. Closure Time: 5 minutes

Summarize the session, refer to the goals, and close the session. Tomorrow's session deals with the foundation construction. Distribute Handout 8-1: Cement, Concrete, and Masonry and ask the participants to read it before tomorrow.

MATERIALS

Flipcharts for:

Session objectives
Five tasks for layout and setting up forms

Handouts:

7-1: Wooden Forms for Concrete Foundation
7-2: Lecturette Notes: Constructing the Foundation
7-3: Splash Pad and Spring Flow Drainage Ditch

WOODEN FORMS FOR CONCRETE FOUNDATION

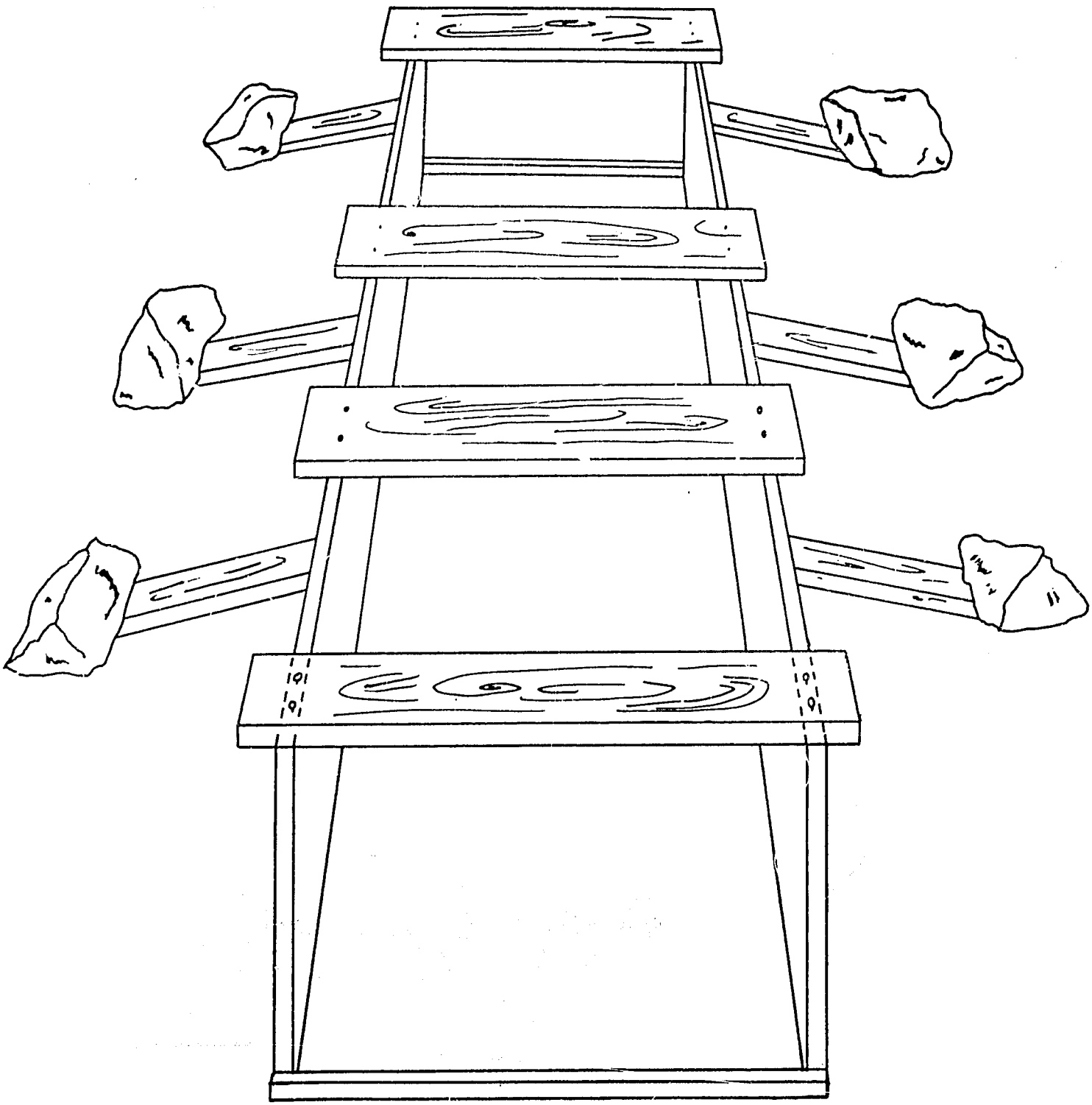

LECTURETTE NOTES: CONSTRUCTING THE FOUNDATION

A foundation is the spring system's link to the ground, its base, floor, or footing. The foundation must also be securely attached to the wall or structure it supports in order to provide holding strength to counteract the forces it is built to oppose or control. In this case the forces from the flow and volume of spring water under the pull of gravity will try to push the wall over or seek ways of getting around or under it. Since the structure must continually oppose these forces for perhaps 10 years, inspection and maintenance are important to prevent system failure.

There are five basic tasks to complete this construction step. They are:

- Find a solid, stable, impermeable location for the foundation.
- Measure the depth, width, and thickness which will be required for the wall.
- Connect or key the foundation into the earth.
- Lay out and build the forms which will hold the concrete in the shape desired until it has hardened.
- Shape and hang reinforcing materials.

Finding a Solid, Stable, Impermeable Location for the Foundation

A common cause of retaining wall failure is undermining, in which the spring flow forces its way under the foundation and escapes. To avoid this:

- Dig 15 cm down into a solid, stable layer.
- If it is to be on soil, excavate until a stable, impermeable soil is revealed. Excavation to rock is preferable.
- Make the soil or other impermeable layer level so the weight of the structure will be distributed evenly.

Deciding What Height, Length and Width Will be Required for the Wall

The three dimensions of height, length, and width will obviously vary for different site conditions. These factors should be considered in making this decision:

- The structure to be built
- The flow and force of the spring flow
- The strength and stability of the supporting soils and rock

Based on the above conditions, choose from the model foundations given during the planning and design session.

Connecting or Keying the Foundation to the Earth

Where possible use natural conditions to connect or key the foundation into the earth. Do this by:

- Always removing topsoil from the area and continuing to excavate at least 45 cm below the existing ground surface.
- Providing wing walls or supports pushing on the front or outside face of the structure against the natural flow force and gravity.

Laying Out and Building the Forms to Hold the Concrete

Lay out and build the forms which will hold the concrete in the shape you want it until it has hardened and attained its full strength and permanent form.

- Select materials which can be cut to fit tightly into the space which you have excavated for the foundation.
- Use wood, sheets of tin roofing, or other rigid materials which can resist and maintain their shape as the wet concrete pushes against them.
- As concrete hardens, it shrinks.
- Concrete is very dense and heavy; 2,500 kg per cubic meter or 150 pounds per cubic foot.
- If the form is constructed above ground realize that the bottom section will try to expand more than the top as the weight pushes down.
- All corners and sides must be securely connected to resist the expansion forces which will seek the weakest point in the form.

Shaping and Placing Reinforcement Materials

Concrete can resist crushing weight, but it can be bent and is brittle and cracks easily. Reinforcement is used to prevent bending or stretching.

An iron rod will bend, but not break, and it will not stretch. Therefore, as the concrete hardens, it grips and adheres to the ridged rod. Then when force is applied to the concrete, the strength of the rods within it will help it resist.

Reinforcing rod is expensive and often in short supply, but worth getting.

Reinforcement should be provided at a level 2/3 the depth, 1/3 from the bottom, and five centimeters from the surface along the entire width and across the thickness in two, three or four places.

The reinforcement should be clean and dry and placed or hung so it will be completely covered by the concrete, thus protected from corrosion or destruction by the weather or the spring's waters.

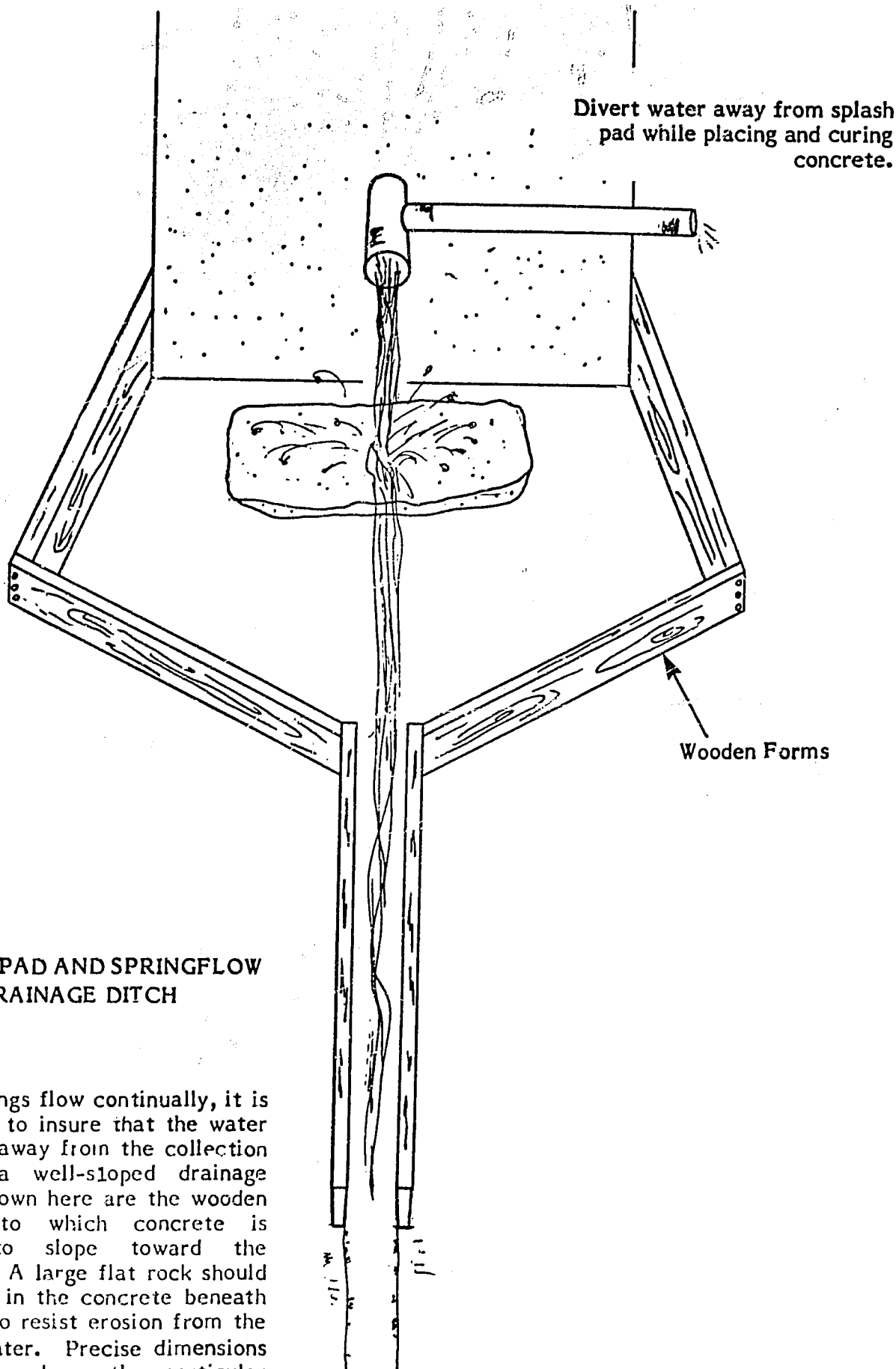

SPLASH PAD AND SPRINGFLOW DRAINAGE DITCH

Since springs flow continually, it is necessary to insure that the water will flow away from the collection site in a well-sloped drainage ditch. Shown here are the wooden forms into which concrete is placed to slope toward the drainage. A large flat rock should be placed in the concrete beneath the pipe to resist erosion from the falling water. Precise dimensions would depend on the particular spring.

Previous Page Blank

SYNOPSIS

SESSION 8: CONSTRUCTING THE FOUNDATION

Total Time: 7 hours

	PROCEDURES	TIME	HANDOUTS	FLIPCHART MATERIALS
1.	Introduction	5 min.		Session Objectives
2.	Lecturette/Discussion	30 min.		
3.	Preparation for Field Work	15 min.	8-1: Cement, Concrete, and Masonry	
4.	Field Work	4 hrs.		
5.	Discussion	90 min.	Planning Guide (See Handout 2-5)	
6.	Checking for Skill-Level Progress	30 min.		

Previous Page Blank

SESSION 8: Constructing the Foundation

Total time: 7 hours

OBJECTIVES

By the end of this session, trainees will be able to:

- Select and mix standard and alternative proportions of sand, gravel and cement to make reliable batches of concrete
- Pour and lay concrete
- Carry out the curing of the foundation, including inspecting and controlling the curing process

OVERVIEW

This session is intended to help trainees learn how to mix and pour the concrete for the foundation. Various mixes of concrete will be demonstrated, so that results of these mixes can be studied. Strategies for pouring the concrete into the forms will be covered. The curing process will be explained as well as ways to inspect the concrete foundation for making certain it is constructed appropriately. A mason should be on hand to aid in mixing and pouring concrete.

PROCEDURES

1. Introduction — Time: 5 minutes

Give the group the information in the overview and state the objectives.

2. Lecturette/Discussion on Mixing, Pouring, and Curing the Concrete Foundation — Time: 30 minutes

Now the site is prepared for the first permanent improvement, the concrete foundation. The spring flow is protected and diverted to keep the area dry and the reinforced forms are in place to mold the concrete. Next, there are four tasks spread over several days until the concrete has attained full strength and hardness. These are:

- Clean and measure sand and gravel
- Mix the concrete
- Fill the forms with concrete
- Cure and inspect the concrete foundation

Previous Page Blank

Cleaning and Measuring Sand and Gravel. Based on the size of the foundation, make one pile of two portions of sand and another of three portions of gravel. Make sure the sand is free of dirt; check by washing some. Refer to the test for cleaning sand presented in Handout 8-1: Cement, Concrete, and Masonry. If necessary sift and wash the rest. Also make sure the gravel has been washed free of dirt. Dirt prevents the cement from making a solid bond.

Emphasize the proper storage of cement. Cement is usually supplied in paper bags, and the bags must be protected from moisture and from tearing. Refer to the handout for the "shelf-life" of cement and how to diagnose if the quality is acceptable.

Mixing the Concrete. Select a hard, clean area in which to mix concrete such as a wooden box or wheelbarrow. Measure one portion of cement and mix with two portions of sand and three of gravel. Before mixing, look to see if the cement is in clumps. If so, do not break up clumps. This is evidence that the cement has been wet. It cannot be used after being wet as it will not bond again.

Add water slowly, while mixing, until the consistency just begins to appear homogenous and feels workable. Repeat the water and mixing as needed. Remember, the more water, the soupier and weaker the concrete will be. This can cause the heavier gravel to sink to the bottom.

Filling the Forms with Concrete. The concrete must be poured or placed within 30 minutes. Do not drop or throw the concrete into the form. It must be set in place or poured smoothly to avoid separation of the heavier gravel in the mix. Tamp and shake the surface with a flat object to insure that the concrete entirely fills the spaces in the form. The entire foundation must be poured during the same work session. Concrete that has hardened will not bond properly to freshly added concrete.

The structure to be used as a laundry pad should have a smooth, flat stone mortared securely at the top for washing clothes. A concrete top is too abrasive for washing clothes and will wear out the fabric.

When the foundation is just beginning to harden, distribute rocks around the top surface of the foundation in two rows and gently sink and push them partially into the concrete. This will enable a strong bond between the rock and mortar wall to be built on the foundation. (Illustrate with visual drawing.)

Curing and Inspecting the Concrete Foundation. Begin the process of curing by covering the concrete-filled form(s) to prevent rapid drying under a hot sun. The covering could be wet burlap or other material. Wet the forms and surface during daily inspections for form failure and progress in hardening. Daily inspection is to assure that:

- Forms are still in original state
- Spring flow is still diverted
- Concrete is hardening
- Concrete is wet and protected from sun

- No one is vandalizing the concrete

Remove the forms after three days. The concrete will continue to strengthen if it is not placed under stress; daily wettings and inspections for cracking should continue until several days have passed.

Wet cement will cause irritation and abrasion of the skin. Thus, gloves should be worn and hands washed after contact with cement.

3. Preparation for Field Work — Time: 15 minutes

Explain that the day's field work will include the following field activities:

Field Activity No. 1: Demonstration of Cleaning Sand

Field Activity No. 2: Demonstration of Mixing Concrete

Field Activity No. 3: Mixing and Pouring Concrete in three projects: foundation, splash pad, laundry pad

Three groups should be formed.

4. Field Work — Time: 4 hours

Field Activity No. 1: Demonstration of Cleaning Sand (20 minutes)

Prepare three piles of sand (the day before), a very dirty one, a borderline dirty/clean one, and a clean one. Have trainees compare and determine how dirty each pile is. Discuss how to decide if sand requires cleaning or not. Using a bucket, demonstrate how one goes about cleaning sand.

Display three bottles (prepared yesterday) in which you placed sand from each of the three piles and added water. Now that the sand and dirt have settled, it is easy to see the amount of dirt contained in the sand. Comment that the sand available to them may be silty. Remind them of the consequences of dirty sand and gravel. Emphasize that river-washed sand is preferable when available.

Field Activity No. 2: Demonstration of Mixing Concrete (30 minutes)

Demonstrate the correct way to mix concrete. Take the proper portion of sand, add the proper portion of cement, and mix. Then add the proper portion of gravel and mix. Then make a small indentation, add a small amount of water, and mix. Add more water until the mixture is homogenous.

Demonstrate the proper consistency. Describe what happens if the mixture is too thick.

Then add too much water. Demonstrate the consistency of a mixture that is too thin. Then demonstrate how to correct mixtures that are too thin by dry-mixing correctly proportioned ingredients and adding them to the thin mixture.

For the second demonstration in Field Activity No. 2, explain that you are going to experiment with varying proportions of cement, sand, and gravel.

Have two places to mix concrete. Explain that the first mixture will contain one part cement, two parts sand, and three parts gravel. The second mixture will contain one part cement, three parts sand and six parts gravel. Explain that cement is the most expensive ingredient, and therefore the one most important to conserve.

Have trainees mix the two batches, using the mixing process you just demonstrated. Be sure the two groups add the same amounts of water.

Compare the two batches. Point out the differences in consistency and density. Explain which one will be stronger (1:2:3 proportions) and why. Describe where one might need a stronger type of concrete.

Field Activity No. 3: Mixing and Pouring Concrete

Have the three teams begin their work on measuring, mixing, and pouring concrete for the three projects (foundation, splash pad, and laundry pad). Trainers should rotate from group to group, helping and advising, but not doing the work.

When each group is ready to pour or place the concrete into the form, one of the trainers should demonstrate how this is done. Show how concrete should be placed and how to get it to settle into all the spaces in the form.

When the teams have completed their work for the day, have them plan their inspection tours for each day. They should identify what their inspection will include and plan when they will do it. (Opportunities for inspection will be before, after, or during lunchtimes on the following two days.)

5. Workshop Discussion — Time: 90 minutes

Have each work team meet for 20 minutes or so to discuss these points:

- How did the mixing and pouring of concrete go?
- Special problems or interesting situations that came up.
- What action was taken to deal with these problems/situations? Were they successful?
- Questions remaining about this stage of the project cycle.

Lead a total group discussion with each team sharing its responses to the above four points. Use approximately 30 minutes for this discussion.

Ask the trainees to reflect individually for a few minutes and identify what they feel are the most important steps in mixing and pouring concrete. Put these steps on the flipchart. Use about 15 minutes for this activity.

Then ask them to take these steps and transfer them to their planning guides. Give them 15 to 20 minutes to work on planning for their first spring-capping project. Trainers should be available for consultation.

6. Checking for Skill-Level Progress Time: 30 minutes

Refer back to the objectives of this training session. Check to see if trainees feel they were met.

Ask the trainees to refer to their Task Analysis sheets. Explain that they have completed major portions of the training required for them to be able to perform tasks under the planning and design stage and the construction stage. Ask them to rate their perceived skill level, now that they have spent four days working with these tasks. They should use the same scale as they used when they rated their entry skills. Explain that items 20 and 21 will be covered during the workshop. This will take about 10 minutes.

Have the trainees share responses to the skill-levels in the Task Analysis with one other person. Use 10 minutes.

Then, in a total group discussion, ask which skill areas they feel the most and least confident with. In the areas they feel least confident about, ask what they feel they need to know in order to feel more secure with their skill level in that area. During the remainder of the workshop trainers and participants will look for ways these perceived skill-deficiencies may be addressed.

MATERIALS

Flipcharts for:

Session objectives

Handouts:

8-1: Cement, Concrete, and Masonry

Advance preparation:

Materials for demonstration on cleaning sand

Materials for mixing concrete: sand, gravel, and cement

Tools for mixing and pouring concrete: shovels, trowels

CEMENT, CONCRETE, AND MASONRY

Adapted from: Handbook of Gravity Flow Water Systems, T.D. Jordan, UNICEF, Nepal, 1980.

INTRODUCTION

Just about all structures constructed in water supply projects require the use of cement: mortar for masonry, plaster for waterproofing, and concrete for floor slabs. Proper knowledge of how to select the best materials, how to organize cement-mixing procedures, and how to make efficient and economical use of cement is all essential to the trainee.

This chapter describes the various materials required for cement work, their properties, and important considerations. It will discuss masonry of brick and stone, and concrete slabs for floors and roofs. It will present organizational procedures, helpful construction tips, and mention some common problems.

DEFINITIONS AND TERMS

The common cement work vocabulary used in this chapter is listed here, with a brief explanation:

cement: serves as an adhesive, gluing together sand and stone. Typically, normal Portland cement is used: a gray powder, similar to flour.

mortar: a mixture of cement and sand in various proportions, depending upon desired strength. Used to cement together bricks or stones in masonry, and used to plaster walls for waterproofness.

concrete: a mixture of cement, sand, and aggregates (such as gravel or crushed stone) in various proportions. Can be poured to form slabs.

RCC: reinforced concrete. Concrete with reinforcing steel rods or bars embedded in it for additional strength and support. Wire screening may also be used.

rebar: reinforcing steel bars or rods, used in RCC or RF brick.

aggregate: small pieces of stone mixed with cement and sand to form concrete. Coarse aggregates may be gravel, crushed stone, or crushed brick. Fine aggregate is sand.

gravel: usually found along rivers and streams: small pebbles and stones, worn fairly smooth and rounded by the action of water.

crushed stone: large pieces of rock or stone broken down to aggregate size, by manual labor using sledge hammers.

crushed brick: pieces of broken-up brick.

Previous Page Blank

CEMENT

Cement is a mixture of chalk or limestone and clay, which is fired and then ground into a fine powder. Additional materials may be added to impart certain properties to the cement (such as to make it quick setting, low-heat, rapid-hardening, etc.). Ordinary cement is a gray powder, commonly known as "Portland cement".

Properties of cement: Portland cement is used for ordinary construction projects. Cement mortar or concrete has high compressive (crushing) strength, but relatively low tensile (stretching) strength. When water is added to a mortar or concrete mixture, it forms a fluid mass which is easily worked and placed into position. Within an hour (depending upon temperature and mix) the cement begins to set, losing its plasticity. Within four hours it has finished setting and can no longer be worked. From the time that setting begins, the cement is undergoing a chemical hardening process which will continue for at least a year, although it hardens most rapidly during the first few days. For the purpose of spring capping construction, the required strength for continuing work is achieved in a week.

Hydration: When water is added to a dry cement mixture (for either mortar or concrete), it begins a chemical reaction with the cement known as "hydration". This reaction causes the cement to set and harden, giving off heat in the process. The rate of hydration is accelerated by heat and humidity, therefore cement will set and harden faster at warmer temperatures, and *vice versa*. (Freezing of cement completely kills the hydration reaction, which will not continue even if the cement is thawed out. The hydration reaction requires moisture, but the heat generated by hydration tends to cause evaporation of the moisture in the mix. Thus it is necessary to prevent the rapid drying-out of the cement, especially during the first few days. Once hydration ceases, the cement will gain no further strength.

Setting: When water is added to a cement mix, there is a period of about 30-60 minutes in which the mix is plastic and easily worked into position. However, after that period, the mix begins to set, becoming stiffer and stiffer. Within a few hours, the setting should be complete. Once setting has begun, the mix should not be disturbed or it will weaken. The onset of setting can be determined by pressing the blunt end of a stick or pencil into the mix: resistance to penetration will suddenly increase when setting begins.

Hardening: This is a process whereby the cement mix gains strength. Hardening begins as soon as setting begins, but continues for at least a year.

Both setting and hardening are influenced by temperature: heat accelerates the rates of both.

Curing: Curing is the process of keeping the cement mix properly wetted, to ensure that there is enough moisture for the hydration reaction to continue. It is especially important during the first few days after pouring a concrete mix, when the cement most rapidly gains its strength.

Packaging of cement: One liter of Portland cement weighs approximately 1.44 kg. Cement is typically factory-packed in bags of 50 kg each, so therefore

each bag should ideally contain nearly 35 l of cement. However, some cement is lost during shipping and portering. For practical purposes, the amount of cement per bag should be considered as follows:

burlap (jute) bags: 32 liters
paper bags: 34 liters

Storage of cement: Cement easily absorbs moisture from the air, and as a result loses strength during long periods of storage. Typical losses are as follows:

Period of storage	Loss of strength
3 months	20%
6 months	30%
12 months	40%
24 months	50%

When cement is stored at the project site, it should be stacked in a closely-packed pile, not more than 10 bags high (to keep the bottom bags from bursting). Close-packing also reduces air-circulation between the bags, which is good. The pile of cement should be raised on a platform above the floor. The room or storage shed should have as little air circulation as possible, and if a long storage period is anticipated, the pile should be further covered by plastic or canvas tarpaulins. Paper bags of cement will resist aging much better than burlap bags; therefore, paper bags should be on the outside of the pile, and the burlap bags should be the first used in construction.

Old cement will form lumps. All lumps should be screened out of the cement, and no lumps should be used which cannot be easily crumbled by the fingers. If old cement (i.e., field stored for more than six months) must be used, increase the amount of cement in the mix by one-half to one part (depending upon how lumpy it is).

WATER

Water in the cement mix serves two purposes: first, to take part in the hydration reaction of the cement; and second, to make the mix fluid and plastic enough so that it can be easily worked and placed.

Quality: Water that is fit for drinking is usually fit for mixing cement. Water unsuited for drinking may still be used, if tested as follows:

Using water of known suitability (i.e., drinking water), make 3 cakes of cement paste, each approximately 1-2 cm thick by 6 cm in diameter. At the same time, make 3 identical cakes using the unknown water. Comparing the two types, observe the setting time, the "scratchability" (using a fingernail) and strength after a few hours, 24 hours, and 48 hours. Only if both types of cakes are equally strong should the unknown water be used.

Quantity: Water is necessary for the hydration of the cement, but too much water added during mixing results in a weaker strength. The quantity of water generally needed to make the mix easily workable is much more than is needed

for the hydration reaction. Therefore, no more water should be added than necessary to make the mix easily workable. The ideal quantities of water depend upon the amount of cement in the mix, and approximate guidelines are given later.

Once the cement has finished setting, further addition of water does not weaken it. In curing concrete, this is a necessary action to prevent the surface of the slab from drying out too quickly.

SAND

Sand is used in both mortar and concrete (in the latter, it is sometimes referred to as "fine aggregate"). Proper sand is well-graded (i.e., containing grains of many sizes mixed together). Sand of a uniform size, such as beach sand or very fine sand, is not suitable (but can be mixed into coarser sands).

Sources of sand: Sand found in land deposits is known as "pit sand". Such grains are generally irregular, sharp, and angular. Sand carried by water, such as found along banks of rivers or lakes, is known as "river sand". Such grains are generally rounded and smooth, due to the action of water.

Both types of sand are suitable for cement work, so long as they are well-graded and clean.

Quality: Sand containing clay, silt, salt, mica, or organic material is not good, since such contaminants can weaken the strength of the cement if they are present in large quantities. There are easy field tests which can be conducted to determine the quality of a sand source:

a) A moist handful of the sample sand is rubbed between the palms of the hands. Suitable sand will leave the hands only slightly dirty.

b) Decantation test: a drinking glass (or other clear glass container) is half-filled with the sample sand, and then filled three-quarters-full of water. The glass is then shaken vigorously, and allowed to sit undisturbed for an hour or so. The clean sand will settle immediately, and the clay and silt will settle as a dark layer on top of the sand. The thickness of the clay/silt layer should not be more than one-seventeenth (6%) of the thickness of the sand.

Dirty sand can be washed by rinsing repeatedly with water.

Bulking of sand: Damp sand that contains up to 5-6% water will swell up and occupy a greater volume than if it were perfectly dry. This is known as "bulking". A moisture content of 5-6% can increase the volume by over 30%. Additional water content reduces the bulking, until the sand is saturated completely (saturated sand occupies nearly the same volume as it does when dry). Thus when using slightly damp sand, it is necessary to use an extra amount of sand in the mix if it is to be proportioned by volume. Very damp sand (such as freshly washed) is measured as if it were dry. If the mix is proportioned by weight, the bulking is of no consequence.

AGGREGATES

Aggregate is the general term for the material mixed with cement and water to form concrete. Sand is a fine aggregate, and large material is a coarse aggregate.

Coarse aggregates may be gravel (generally river-worn, rounded rocks) or crushed rock and brick.

Stones of granite, quartzite, basalt, or those with rough non-glossy surfaces are best. Hard limestones are good: soft sandstones are not. Limestones and sandstones are porous and therefore not good for water tank floor slabs, but can be used for roof slabs (the same applies for crushed brick).

Aggregates must be clean and well-graded. Smaller rounder aggregates (such as river gravel) are better for waterproof floor slabs.

Sizes of aggregates: Aggregates should be well-graded so that air voids between pieces are minimal. Largest sizes should be:

For roof slabs: 10 mm
For unreinforced or lightly reinforced slabs: 20-25 mm

Crushed brick: Pieces of broken-up brick may be used as aggregate in concrete, but due to their porous nature should not be used for floor slabs of water tanks. When crushed brick aggregate is used, the pieces should be thoroughly soaked in water prior to mixing, to prevent absorption of moisture from the mix (which will interfere with the hydration reaction).

REBAR REINFORCEMENT

Reinforcement of concrete is only needed for slabs which are large in area or which will be put under great hydrostatic pressure (i.e., deep water depth). An RCC slab can be thinner than a non-reinforced slab. The presence of the reinforcement helps to distribute the stresses and forces uniformly over the entire mass of concrete.

Reinforcing bar (rebar): Rebar is available in many sizes, but for typical water supply projects only the following diameters are needed: 6 mm, 8 mm, or 10 mm.

Wire-mesh screen (also known as "wire-mesh fabric"): Wire-mesh screen can also be used as reinforcement in slabs. The size of aggregate in the concrete mix should be smaller than the size of the mesh (using a piece of the screen to sift the aggregate is the best way of ensuring this).

Spacing of rebar: The spacing of the rebar must distribute the cross-sectional area of steel uniformly across the cross-sectional area of the slab. For a floor slab, the area of rebar must not be less than 0.225% of the total cross-sectional area of the slab, and for a RCC roof slab it must not be less than 0.30%. The following table can be used:

Type of slab	Thickness (cm)	Spacing of Rebar (cm) 6 mm	8 mm	10 mm
floor	8	15	30	40
roof	8-9	12	21	33
roof	9-11	10	17	27
roof	11-13	8	14	22
roof	13-15	7	12	19
roof	15-17	6	11	17

Placing of rebar: The reinforcement is made as a grid, with the size of the squares according to the table above. The rebar rods can be tied together with thin wire or string. The rebar must have a minimum of 3 cm of concrete covering. For a roof slab, the rebar is set 3 cm from the bottom of the slab, and for a floor slab the rebar is set 3 cm from the top of the slab.

The rebar must be securely fastened so that it cannot be shifted around while the concrete is being placed (the rebar can be supported on pieces of non-porous rock, but NOT brick or wooden stakes).

CEMENT MIXING

For convenience, it is usually easiest to mix cement at the construction site, so it is necessary to ensure that there is an organized system for delivering cement, sand, aggregates, stone or brick, and water. It is particularly important when mixing and pouring concrete that it be done in a continuous operation, without long delays caused by lack of materials.

Mixing pad: Cement should never be mixed on the ground. A mixing pad of brick, slate or concrete, or a wheelbarrow should be used. It should be large enough to allow mixing of convenient-sized batches, without overflowing: 1.5 square meters is adequate. If possible, build a small lip around three sides of the pad so that materials may not get accidently washed off.

Proportioning: Although the most accurate method of proportioning cement, sand, and aggregates is by weight, in a field site this is not so easy to arrange. The common method is to mix by volume, using a small bucket. Measuring by shovelfuls is not accurate. Mortar should be mixed in smaller batches than concrete, but no batch should be so large that it is not used in 30 minutes.

Dry-mixing: All ingredients are first thoroughly dry-mixed together, using shovels and trowels, until the mix is of a uniform color and consistency.

Wet-mixing: Water is added slowly, a small quantity at a time. Each time water is added, the mix is thoroughly "turned over" a few times with shovels. Water is added until the mortar or concrete is at the desired consistancy. The wet-mix can be adjusted as follows:

Too wet: add sand and cement or add aggregate

Too dry: add water

Too stiff: add sand

Too sandy: add cement

Tools and Manpower: A cement-mixing team should minimally have three persons: two for mixing, one for adding water and ingredients. Each team should have two shovels and two trowels, a small bucket (for measuring proportions) and a large bucket (for transporting the mix to the masons).

MORTAR

Cement mortar is used for masonry construction of walls and for plastering. Grout is used to cement rebar anchor rods into rocks and embed galvanized iron (GI) pipes into the masonry.

Typical mixes: Proportions of cement to sand, by weight or by volume:

Type of mortar	Cement:sand
Ordinary masonry	1:4
Reinforced brick roof slabs	1:3
Rough plaster	1:3
Final plaster	1:2

Volumes of mortar: The total volume of mortar is equal to the total volume of sand in the mix. The cement mixes with water to form a paste which fills in the voids in the sand. Thus, a 1:4 mix requires 100% sand and 25% cement; a 1:3 mix requires 100% sand and 33% cement, etc.

Quantities required to make one cubic meter (1 m^3) of various mortar mixes:

Mortar mix	Sand (m^3)	Cement (m^3)
1:4	1.0	0.25
1:3	1.0	0.33
1:2	1.0	0.50
1:1½	1.0	0.67
1:1	1.0	1.00

MASONRY

Because the masonry walls of the tanks are required to be as waterproof as possible against the hydrostatic pressure of the water inside, particular attention must be paid to the workmanship of the masons. It must be made clear to them that a masonry wall built the same as walls for their house is not adequate, and that the walls of the tanks must be carefully laid down according to directions.

Brick masonry: Bricks are usually locally manufactured and are of various shapes and quality. The exact dimensions of local bricks should be obtained for making the estimated requirements. The total volume of brick masonry is approximately 25% mortar and 75% brick. Bricks should be soaked in water for

several minutes prior to being used (this prevents them from absorbing too much moisture from the mortar), but they should not be soaked excessively.

Masons who are experienced at building houses with brick and mud mortar will be inclined to build tank walls in the same manner: laying down a bed of mortar, then placing the bricks tightly together on top of it, then laying down another mortar bed for the next course. The result is a network of unobstructed channels between the bricks where water will have easy leakage. Proper brick masonry for waterproof walls requires spacing the bricks one centimeter apart, and carefully filling in the joints with mortar. Bricks should be laid in patterns that do not result in a straightline joint from the inside to outside of the wall. Refer to Figure 1 for various points on brick masonry.

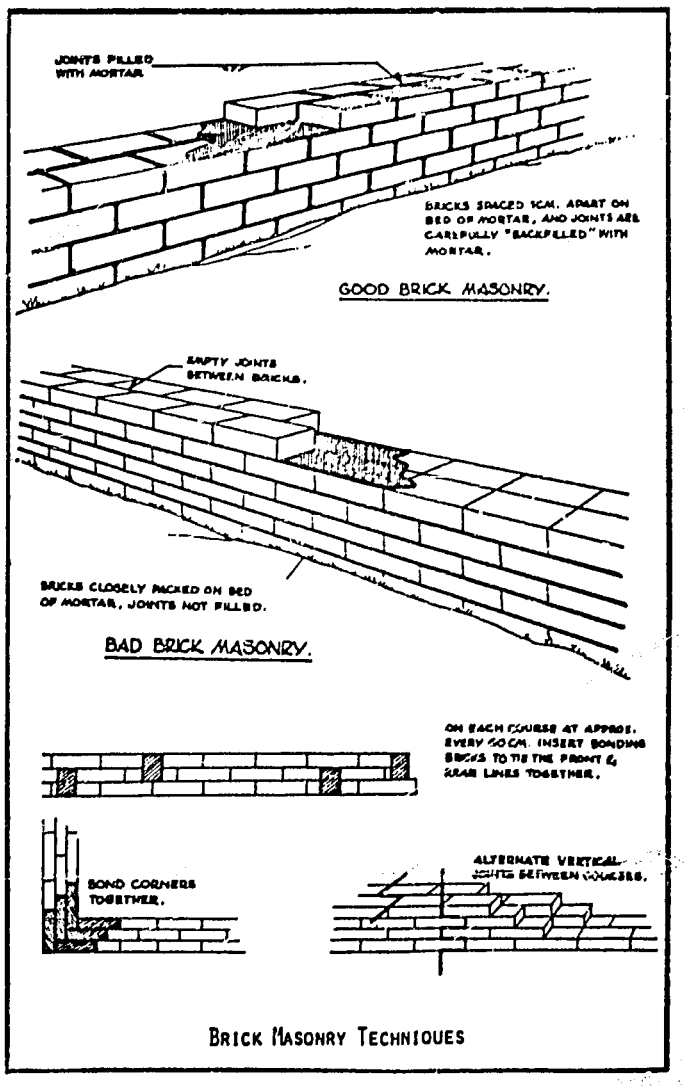

Figure 1: Brick Masonry Techniques

The top course of bricks should be completely clean and wetted before putting down the mortar bed for the next course. If the mortar on the top course has begun to set, the joints should be scraped down approximately one centimeter deep and refilled with fresh mortar. The walls should be built up evenly, so that the weight is distributed uniformly: no section of a wall should be more than 15 courses (approximately 1 meter) higher than the lowest section.

Once the mortar has set, the masonry should be wetted regularly (several times per day) for several days.

Dressed-stone masonry: Also known as "ashlar masonry". In this type of masonry, the stones are carefully cut to rectangular dimensions, making "stone bricks". Such masonry requires skilled masons, and much time and labor. Ashlar masonry is approximately 30% mortar and 70% stone.

Rubble-stone masonry: This is the most common type of masonry. The stones are roughly shaped by the masons. The stones should be lightly tapped down into the mortar, then securely fixed using mortar and pieces of crushed gravel. No stone should span completely from the inside to the outside of the wall. With this type of masonry, it is very easy to leave air voids between the stones, so care must be taken that this does not happen. For estimate purposes, this type of masonry is approximately 35% mortar and 65% stone.

Setting GI pipe: GI pipe is set into masonry walls on a bed of 1:1 or 1:1½ mortar A minimum length of 30 cm of pipe should be embedded, and the more the better. Once the pipes have been placed, they must not be disturbed at all for several days. Building a protective dry-stone masonry wall will protect against accidental dislodgement (this can happen quite easily otherwise, for the worksite is the scene of much activity). The pipemouths should be plugged up to keep any mortar from accidentally falling into them.

CONCRETE

Concrete is used for pouring floor and roof slabs of tanks. The size and type of aggregates depends upon the purpose of the slab, its reinforcement, and its thickness.

Typical mixes: The following proportions are recommended for concrete, proportions by either weight or volume:

Normal RCC work (roof slabs): 1:2:4 (cement, sand, aggregate)

Waterproof slabs (tank floors): 1:1½:3

Concrete is proportioned and mixed as already discussed earlier.

Water: For the above mixes, the approximate amount of water needed is three-fourths part water per part of cement (1:3/4 cement: water) by volume.

Volumes of concrete: The total volume of the concrete mix is never less than the total volume of aggregates. Typically, air voids make up 50% of the aggregate volume, and these voids must first be filled by the mortar. Excess mortar then adds to the volume of the concrete.

For the above mixes, the following volumes of cement, sand, and aggregate are necessary to produce one cubic meter (1 m^3) of concrete:

Concrete mix	Cement (m^3)	Sand (m^3)	Aggregate (m^3)
1:2:4	0.25	0.5	1.0
1:1½:3	0.33	0.5	1.0

Segregation: This is the separation (due to gravity) of the aggregates in the concrete. The heavier aggregates will tend to sink to the bottom, and water will rise to the surface. The result is a poorly mixed concrete which will be weak. Segregation usually happens when the concrete is transported from the mixing pad to the work site; therefore, the mixing pad should be as close to the final pouring point as possible, and the concrete should be re-mixed with a trowel before pouring.

Placing the concrete: A bucket of concrete should never be dumped from any height since segregation of the aggregates will occur. Concrete should be placed in strips about 15-20 cm wide, never as piles (refer to Figure 2). If a fresh layer is to be put down on top of an earlier layer, then the second layer should be put down before the first has begun to set (within 30 minutes). Rough leveling of the concrete can be done, but extensive trowelling will cause the cement paste to rise to the surface of the slab.

Before it sets, the concrete must be thoroughly compacted.

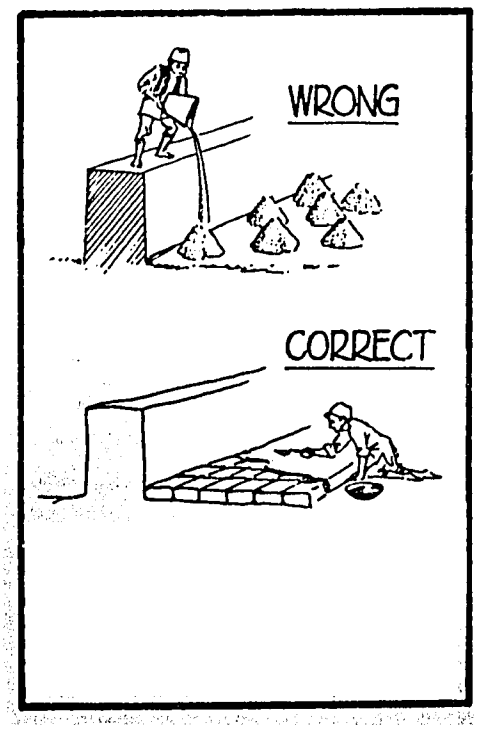

Figure 2. Placing Concrete

Compacting: This is the process of settling the concrete so that it contains no air voids. This is accomplished by "rodding" the concrete: poking a length of rebar into the concrete and stirring it up and down.

The concrete should be carefully rodded in all corners and around the reinforcement. Over-rodding, however, will cause segregation. After rodding, the concrete should be tamped level again, using a flat board of wood. Sprinkling loose cement on the surface of the slab (to absorb excess water) is not good: such a layer will easily crack, crumble, and powder.

Waterproofing floor slabs: A day after the concrete has been placed, a water proofing plaster may be put down. A mortar mixture of 1:1 proportions should be worked onto the surface of the slab with a wooden float. Only a thin layer of plaster is needed, just enough to seal the surface pores of the slab and smooth it over. Waterproofing compound can be added to the mortar.

Curing: After the concrete has set 8 to 12 hours, the floor slab should be flooded with a few centimeters of water. More than this will put too much hydrostatic pressure on the concrete, which may not be strong enough to support it. After one day, the water may be drained off for waterproofing (as described above), but once the waterproofing plaster has set it should be re-flooded and kept that way for several days (after three days, if all else is finished, the tank may be filled fully and put into service).

When the slab is first flooded, care must be taken that the discharge flow doesn't erode the fresh concrete.

If the slab is being poured over a period of several days, the surface of each section must be covered over with a tarpaulin and constantly wetted. This method must also be used for drying a roof slab.

Improper curing will allow the surface of the slab to dry out and shrink, while the interior mass remains unchanged. The resulting tensions will cause the surface to crack, reducing waterproofness. Too much loss of moisture will stop the hydration reaction, and no further strength will develop (even if the concrete is thoroughly flooded again).

PLASTERING

Plastering masonry walls adds to their waterproofness. Several thin coats of increasing richness (i.e., cement content) are better than one or two thick coats.

All walls will receive at least two coats of plaster, each 1 cm thick; and should be plastered at least 5 cm above the overflow level.

Rough coat: A mortar mix of 1:3, applied to the masonry. That coat is left with a rough surface.

Final coat: The final coat is a 1:2 mortar mix, which is finally troweled smooth and clean.

Only one coat of plaster per day should be applied.

Volumes of plaster: For a plaster coat 1 cm thick, the following quantities of cement and sand are needed for each square meter of plastered surface:

Plaster Mix	Cement (m^3)	Sand (m^3)
Rough coat (1:3)	0.0030	0.01
Final coat	0.0050	0.01

SMALL SLAB COVERS

Small RCC slabs (less than 100 cm square) can easily be made for spring capping.

For such slabs, the reinforcement is best done using large-mesh wire screen, but small size rebar can also be used.

A simple wooden form can be constructed. The rebar is firmly set in place, and short pieces of ½" GI or 20 mm HDP are fixed into position where the 3/8" bolts will pass through. Handles of wire or rebar should be tied to the reinforcement, so that the slab can be lifted.

The thickness of the slab should not be less than 5 cm, and not more than necessary to cover the rebar with 2.5 cm of concrete on both sides.

The concrete mix should be 1:2:4, with small-size aggregate small enough to fit through the mesh if wire screen is used.

After the concrete has been poured, the slab should be covered with sand and kept wetted for three days. After that time, if the form is needed to make more covers, the slab can be carefully removed from the form and kept in a shady place for several more days, being constantly wetted. Covering the slab with wet burlap (jute) sacking will help to keep it moist.

When the concrete has been cured for several days, the slab may be plastered with a 1:3 mortar, to give it a smooth, clean surface.

Figure 3 shows some details of the form and slab reinforcement.

COLD WEATHER CONCRETING

When cement work must be done where temperatures are expected to drop down to freezing levels, special precautions must be taken to protect the cement.

When concrete or mortar freezes, the hydration reaction is stopped permanently. Even when the cement is thawed and re-wetted, the chemical process does not resume, and the concrete develops no further strength than it had when it first froze.

Since the hydration reaction generates heat, the single best strategy is to insulate the cement work to prevent the loss of this heat; especially during the first two days (when the rate of heat loss would be highest).

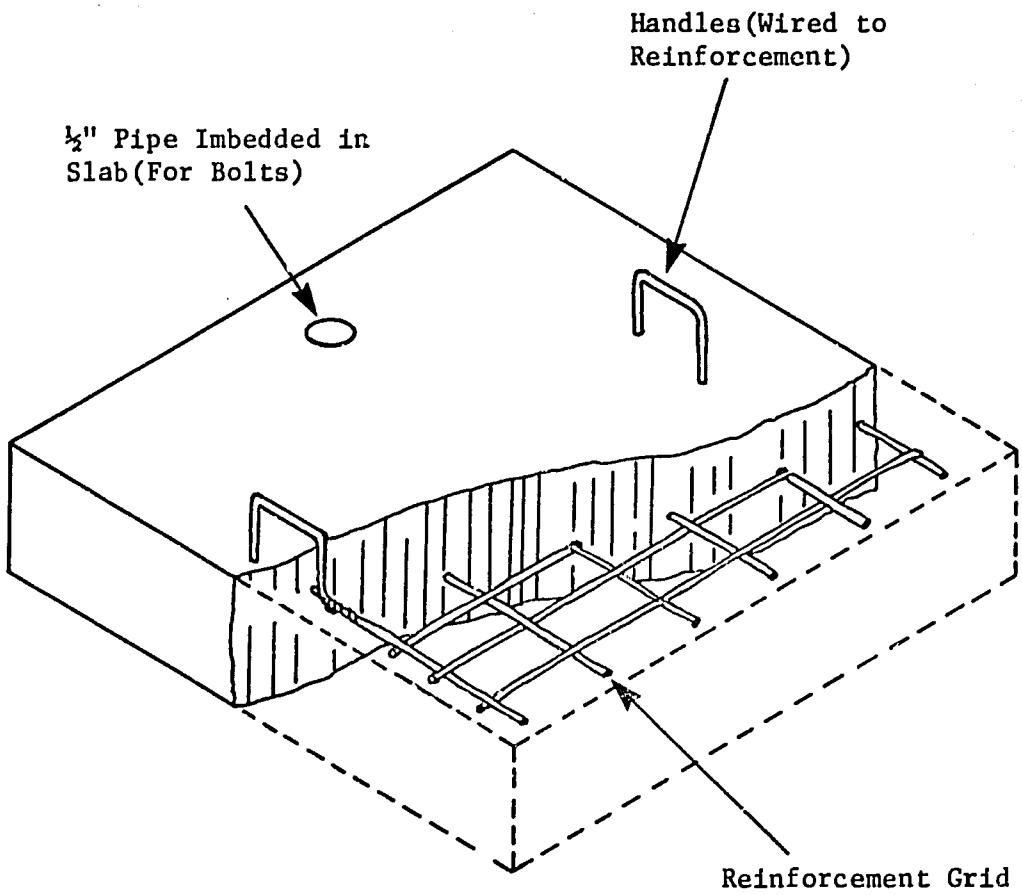

Figure 3
(Form and Slab Reinforcement)

Padding the cement work with straw and covering with mats or tarpaulins will be of special help. When the cement is re-wet (during curing), heated water should be used if possible. Protecting the cement work against the wind is extremely important, and all protruding rebar should be wrapped with cloth (since steel is an excellent conductor of heat, these would be major points of heat loss).

The setting and hardening of cement is temperature-dependent, and will proceed more slowly at lower temperatures. Increasing the amount of cement in the mix by 20-25% will help generate more heat and earlier strength. Heating the aggregates and using hot water for mixing will improve the setting time. The aggregate should not be heated hotter than can be touched by the hand, nor should the water be hotter than 140°F/60°C. Never heat the cement alone, or add hot water to the cement alone.

The freezing point of the mix may be reduced by dissolving salt into the heated mixing water. Salt is added by weight, and should not exceed 5% of the weight of the cement. Each percentage of salt lowers the freezing point by about 1.5°F (0.8°C), but salt cannot be used effectively for temperatures lower than 25°F (-4°C).

SYNOPSIS

SESSION 9: INSTALLATION OF SPRING RETAINING WALL AND PIPE

Total Time: 6½ hours

	PROCEDURES	TIME	HANDOUTS	FLIPCHART MATERIALS
1.	Introduction	5 min.		Session Objectives
2.	Lecturette/Discussion	30 min.	9-1: Lecturette Notes	Drawings
3.	Preparation for Field Work	15 min.		Tasks for Field Activity #1
4.	Field Work	4 hrs.		
5.	Workshop Discussion	90 min.	Planning Guides (See Handout 2-5)	
6.	Closure	5 min.		

SESSION 9: Installation of Spring Retaining Wall and Pipe

Total Time: 6½ hours

OBJECTIVES:

At the end of this session, trainees will be able to:

- Mix mortar for construction of the retaining wall
- Build a spring wall using rocks and mortar
- Locate and lay appropriate service pipes

OVERVIEW

Now that the concrete foundation has been constructed and cured, the wall must be built. Using measurements arrived at during the planning and design session, the trainees will construct the rock and mortar wall on top of the foundation. Service pipes for water flow will be located, sized, and placed at appropriate levels in the wall as it is being built.

A mason will be necessary to supervise the trainees as they build the wall in this session. He will be needed to demonstrate tasks and monitor the construction work.

PROCEDURES

1. Introduction — Time: 5 minutes

Give the information in the overview and present the objectives for the session.

2. Lecturette/Discussion on Building Spring Retaining Wall With Pipe — Time: 30 minutes

Rock and mortar wall construction may begin on the day following the foundation construction. The clay dam continues to collect and divert the spring flow from the construction area. Now the height(s) or level(s) of the pipe(s) must be decided so that flow from the spring will be ensured during both the driest and wettest periods. Then the pipe(s) must be secured among the rocks and mortar as the wall is built. Remember that the water will constantly try to flow through the weakest points of the wall being built. These points are the bonds between the rock and mortar. Therefore the wall must be made with strong, dense materials which water will not penetrate, such as concrete. Here is a series of steps to complete the task.

- Mix batches of strong mortar using one portion of cement, two portions of clean sand, and just enough water to make it workable, not soupy.

Previous Page Blank

- Wet the rocks before placing them in order to achieve the best possible bond between the rocks and mortar.

- Apply mortar surrounding the rocks.

- Select rocks to lay side-by-side in a row facing the spring. Place selected rocks into the fresh mortar and fill the spaces between the rocks with mortar. Select and lay the second (downstream) row adjacent to the first row so that they are behind the mortared joints of the upstream row.

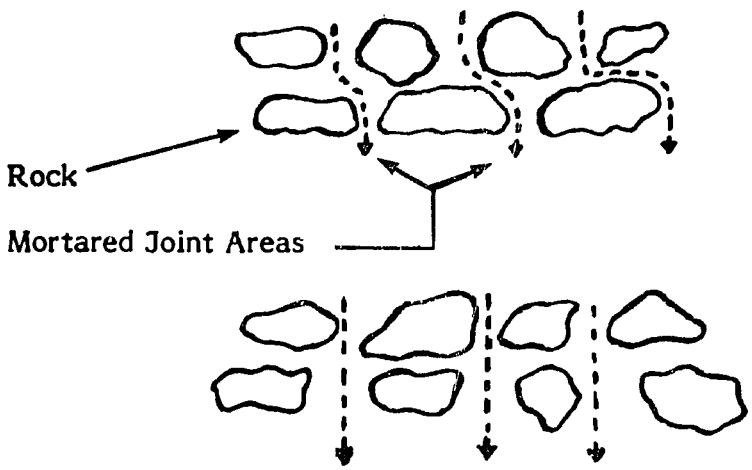

Correct Arrangement

Incorrect

- Place the next layer of rocks on top of the upstream row, with each rock centered on the mortared joints in the row below. Avoid having mortar joints one on top of the other. Continue with the next layer.

Follow these steps in laying the service pipes:

- Locate a "plugged" pipe at the lowest level possible so it can be opened to drain the collected water for cleaning and repair of the structure.

- The number and diameter(s) of the service pipe(s) and intake screen must be adequate to carry the spring flow. This can be determined by referring to the table in Handout 9-1: Lecturette Notes which should be distributed at this time.

- If pipe(s) size(s) must be ordered in advance, measure the springflow and use the table in Handout 9-1 to determine the number and diameter(s) of service pipe(s) required.

- Place the outlet pipe(s) so that it will be just at the level of the spring during the dries period of the year. Refer to Handout 5-2 and 5-3.

- The pipes should extend far enough for the convenient collection of water into a vessel, without being long enough for buckets to hang on it or children to step on them which could cause them to break. All pipes should tilt slightly downward so the downstream end is lower than the upstream end.

- The top of the retaining wall should be at least 20 cm above the outlet pipes. The spring flow may increase during the wetter seasons, thereby increasing the flow and the pressure against the wall. If the wall extends higher than 30 cm above the outlet pipe, then install an overflow pipe placed 20 cm above the service pipe to discharge excess flow and thereby relieve the pressure.

3. Preparation for Field Work — Time: 15 minutes

Explain that the group will be doing these activities today:

Field Activity No. 1: Planning How to Locate and Lay Service Pipes

Field Activity No. 2: Practice Mixing Mortar

Field Activity No. 3: Building the Spring Walls

Explain the assignment for Field Activity No. 1: Planning How to Locate and Lay Service Pipes. Divide the group into three work teams. Ask the teams to plan how they would locate and lay the service pipes. These questions make up Field Activity No. 1. Their planning should cover these questions written on a flipchart.

- How many service pipes will be required?
- Where should these pipes be located?
- Where should these pipes be placed to best collect the spring flow?
- What size pipe should be used?
- How long should the pipes be?
- How will you protect the pipes against damage?

4. Field Work — Time: 4 hours

Field Activity No. 1: Planning How To Locate and Lay Service Pipes

Have all three work teams begin their work on planning how to lay the pipes. When their work is completed, lead a discussion of the planning questions. Be certain all the points covered in the lecturette are discussed with appropriate demonstration using the spring site itself. The time used for planning and the subsequent discussions is likely to take 45 to 60 minutes.

Field Activity No. 2: Practice Mixing Mortar

Have one team prepare mortar for building the wall. Have team members mix the mortar with the other groups watching. Give appropriate suggestions.

Explain the proportions of cement to sand (clean sand) as being one to two (1:2). Many uses for mortar do not require such strong mortar and the ratio of cement to sand can be as much as one to four, five, or seven. However, where water is involved, the strongest and most waterproof mortar is necessary. Village masons may be accustomed to working with less cement and may not make the mortar strong enough for using to hold water unless warned beforehand.

When the mortar is ready, have another team begin working on the wall. As other batches of mortar are needed, be sure other work teams mix it, giving each team practice at this task.

Field Activity No. 3: Building the Spring Wall

Have one team begin building the wall. Have that team inspect the rocks, making certain they are clean. Demonstrate how to lay these rocks, making sure they are wet, placing the mortar around them. Show how rocks are placed (as described in the lecturette) to be stronger against the pressure from the water. Have another group select and wet the rocks. Rotate the teams working on the wall frequently enough for everyone to get practice.

Another way to provide practice opportunities is to construct another wall, perhaps for retaining soil or for any other use.

Stop the wall construction at the appropriate time for laying the service pipes. Demonstrate or have a work team demonstrate how the pipe should be laid, covering all the points included in the lecturette. Demonstrate how to seal the pipe to the mortar by lightly scratching the pipe so the mortar can adhere to it more tightly. Show how the pipe is left long temporarily, since water will flow through the pipe once it is laid. Note how the water from that pipe needs to be diverted from the site.

Have the group calculate how high the wall should be, using the directions from the lecturette.

If the wall is not finished when field time is up, have the group return to the workshop and allow the labor force to complete the wall.

5. Workshop Discussion — Time: 90 minutes

Lead a total group discussion of these questions: (Use no more than 30 min.)

- How do you think today's field activities went?
- What problems did you encounter? How did you solve the problem(s)?
- When you anticipate doing these activities on your own, what concerns you the most?

In generalizing, divide the group into two smaller groups. Give each group flipchart paper and have one group complete one of these tasks and the other group the other task. Give them 10 to 15 minutes.

- List steps required for laying pipe.
- List steps required for building the wall.

Have each group exchange their lists, review, and add comments where appropriate. Use no more than 10 minutes for this exchange/reviewing activity.

Have the trainees work on their planning guides for 15 minutes. Then ask that they share their plans with a colleague. Trainers are available for consultation.

6. Closure — Time: 5 minutes

Summarize the session briefly, refer to the objectives, and link to tomorrow's workshop activities.

MATERIALS

Flipcharts for:

Session objectives
Drawings necessary for lecturette
Tasks for Field Activity No. 1

Handouts:

9-1: Lecturette Notes: Retaining Wall Construction

Advance Preparation:

Plan ahead with mason so he is prepared to demonstrate the work as you want it done.

LECTURETTE NOTES: RETAINING WALL CONSTRUCTION

Rock and mortar wall construction may begin on the day following the foundation construction. The clay dam continues to pool and divert the spring flow from the construction area. Now, the height(s) or level(s) of the pipe(s) must be decided so that flow from the spring will be ensured during both the dry and wet periods. The pipe(s) will be placed in the wall at those levels as the wall is built. Remember water will constantly try to flow through the weakest points of the wall being built. These points are the bonds between the rock and mortar. Therefore, the wall must be made with strong, dense materials which water will not penetrate, such as concrete. Here is a series of steps to complete the task.

- Mix batches of strong mortar using one portion of cement, two portions of clean sand, and just enough water to make it workable, not soupy.
- Wet the rocks before placing them and surrounding them with mortar, in order to achieve the best possible bond between the rocks and mortar.
- Apply mortar surrounding the rocks.
- Select rocks to lay side by side in a row facing the spring. Place selected rocks into the fresh mortar and fill the spaces between the rocks with mortar. Select and lay the second (downstream) row adjacent to the first row so that they are behind the mortared joints of the upstream row.

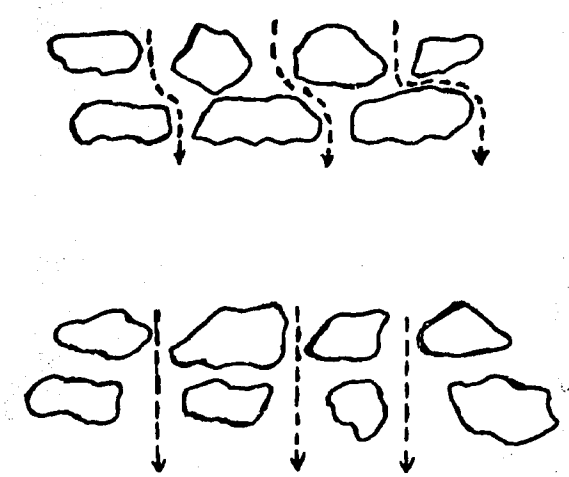

Previous Page Blank

Place the next layer on top of the upstream row, centered on the mortar spaces in the row below: thus a vertical mortar joint does not continue to the next layer.

Follow these steps in laying the service pipes:

1. Locate a "plugged" pipe at the lowest level possible so it can be opened to drain the back of the retaining wall.

2. The number and diameter(s) of the service pipe(s) must be adequate to carry the spring flow. This can be determined by experimenting with the diverted flow and using the size guidelines below:

Maximum Spring Flow	Pipe Diameter
up to 1.0 lps	30 mm
1.1 to 3.0 lps	50 mm
3.1 to 7.0 lps	60 mm

3. Place the outlet pipe(s) so that it will be just at the level of the spring during the driest period of the year. Refer to Handouts 5-2 and 5-3.

4. The pipes should extend far enough for the convenient collection of water into a vessel, without being long enough for buckets to hang on or children to step on them and break them. All pipes should tilt slightly downward so the downstream end is lower than the upstream end.

5. The top of the retaining wall should be at least 20 cm above the outlet pipes. The spring flow may increase during the wetter seasons, thereby increasing the flow and the pressure against the wall. If the wall extends higher than 30 cm above the outlet pipes, then install an overflow pipe placed 20 cm above the service pipe to discharge excess flow and relieve the pressure.

SYNOPSIS

SESSION 10: COMMUNITY SELECTION AND DECISION MAKING

Total Time: 4 hours

PROCEDURES	TIME	HANDOUTS	FLIPCHART MATERIALS
1. Introduction	10 min.		Session Objectives Introductory Questions
2. Introduction to Social Assessment Task	5 min.		
3. Group Task: Designing a Community Assessment	30 min.		Examples
4. Small Group Presentation/Critique	60 min.		
5. Introduction to Community Decision-Making	5 min.		
6. Group Tasks: Designing a Meeting Strategy	30 min.		Explanation of Tasks
7. Community Meeting Simulation	20/30 min.		
8. Discussing the Meeting Simulation	30 min.		
9. Generalization	15 min.		
10. Application	15 min.	Planning Guides (See Handout 2-5)	
11. Closure	5 min.		

SESSION 10: Community Selection and Decision Making

Total time: 4 hours

OBJECTIVES

By the end of this session the participants will be able to:

- Define the essential criteria for selecting a village to participate in a spring capping project
- Determine what information is necessary to share with a community for building a spring capping project
- Identify strategies for communicating this information so that a community can decide to participate in a project

OVERVIEW

During the preplanning stage of the project cycle, the community promoter needs to determine if a village where it is technically feasible for a project is also willing and able to help with the project. Will villagers be willing to contribute the resources? Will they make the project theirs? Do they understand their responsibilities in the project? Do they understand what they are committing themselves to? Who will be involved in the project? What community structures exist? Who will use the finished project? Who will care for the spring? What does the community need to know? All of these and other questions must be answered if the project is to be developed with community participation. This session provides a structure whereby these questions are considered and strategies developed for decision-making.

PROCEDURES

1. Introduction — Time: 10 minutes

Have the questions which are raised in the overview written and posted. Go over the questions as an introduction and rationale for the session. Explain the objectives of the session, which should also be posted.

2. Introduction to Community Assessment Task — Time: 5 minutes

State the following: "In order to decide if a community should be selected to participate in a spring capping project, the project developer needs certain information. The community also needs certain information so that it may decide if it is willing to commit itself to the requirements of the project. In this session we want to consider how to do both tasks. First, we want to decide what we need to know about the community and develop some criteria for

Previous Page Blank

community selection. Later on in this session we will deal with the second question (what the community needs to know). In order to do this, we want to design a social assessment as a group activity."

3. Group Task: Designing a Social Assessment Time: 30 minutes

State the following: "In order to develop a good community assessment within the next hour and a half, we want to divide the group up into three smaller groups and each take a part of the task. At the end, we will put all of our information together and refine the information we want and the criteria needed for selection of a community. We will divide into three groups. The groups will each have a subject to investigate. They will raise questions for inquiry, suggest ways to get the information, and define the minimum criteria necessary for each subject." Use the flipchart to describe this task, listing the following points.

These subjects are:

- Community use and participation in the project
- Community structures and history
- Community resources

The questions each group will work with are:

- What do I need to know?
- How will I find the information?
- What are the selection criteria I will use once I have the information?

Use the following as examples:

- Community Use and Participation in Projects

  What do I need to know?

  How many people will use the spring?

  How will I find the information?

  Talk with village elders.

  Survey users.

  What are the selection criteria I will use once I have the information?

  The village should comprise at least 30-50 people willing to pay for the project.

- Community Structures and History

  What do I need to know?

  Has the community worked together before? On what projects?

  Are there rival groups that could cause problems?

  How will I find the information?

  Talk with school teachers/elders.

  Look for other community projects.

  What are the selection criteria I will use?

  The community must demonstrate willingness to work on the project.

- Community Resources

  What do I need to know?

  How many semi-skilled laborers are in the village and who are they?

  How will I find this information?

  Ask the Health Committee to make a list.

Divide the trainees into the three groups and give each group one subject. Give them 30 minutes to complete the task. Acknowledge that developing the selection criteria may be difficult, but ask them to try to do it for now. It can be discussed and refined later on. Ask each group to be prepared to present the information to the rest of the workshop using a visual aid, flipchart, or blackboard.

4. Small Group Presentation and Critique — Time: 60 minutes

Ask each group to present its portion of the community survey to the rest of the trainees. A group should be able to do this within about ten minutes. Then take ten minutes to discuss and refine the group's presentation and add to the questions. At the end, the trainees should have developed a composite survey and defined the criteria necessary for project-community selection.

5. Introduction to Community Decision-Making — Time: 5 minutes

State the following: "Once you have determined that the community appears to have the minimum resources and community structure to participate in a project, the community must decide if it wants to commit itself to one. To help the community, the project developer should determine what information the community must have to make its decision. Ultimately the community needs to decide with the project promoter whether or not to proceed with a project. The following exercise explores ways to do this with a community meeting simulation."

What happened from your side?

What was your intended strategy?

Did it work?

What would you change in the way you handled this the next time you did it?

Overall Discussion:

Did the use of visual aids help?

Was the information clearly presented?

9. Generalizing from the Simulation — Time: 15 minutes

Draw out what everyone learned from this exercise by asking:

- What in general can we learn about the community decision-making process in a project like this?
- What should the project developer keep in mind when giving information to the community, both from the point of view of the community and the project promoter?

10. Applying What Has Been Learned in This Session — Time: 15 minutes

Ask the trainees to review both the community assessment questions and criteria and revise them or add to the survey based upon what they have learned from the simulation so that they may have a model for future work.

Ask them to do the same with their community presentation model used in the community meeting simulation.

Make notes in their planning guides.

11. Closure — Time: 5 minutes

Refer back to the session objectives and ask the trainees if they have been met.

MATERIALS

Flipcharts for:

Session objectives
Introductory questions
Examples for explaining task in designing a social assessment
Explanation of tasks in designing a meeting strategy

SYNOPSIS

SESSION 11: COMMUNITY INVOLVEMENT: ORGANIZING THE COMMUNITY TO PARTICIPATE

Total Time: 3 hours

PROCEDURES	TIME	HANDOUTS	FLIPCHART MATERIALS
1. Introduction	5/10 min.		Session Objectives
2. Introduction to Case Study	5 min.	11-1: Case Study	
3. Reading Case Study	20 min.		
4. Case Study Discussion	30 min.		
5. Small Group Reports	30 min.		
6. Defining Task	30/40 min.		Chart
7. Generalizing	20 min.		
8. Applying	5/10 min.	Planning Guides (See Handout 2-5)	
9. Closure	5 min.		

SESSION 11: Community Involvement: Organizing the Community to Participate

Total time: 3 hours

OBJECTIVES

By the end of this session, the participants will be able to:

- Develop strategies for involving the appropriate community members in the different stages of project development
- Determine who the appropriate people are to involve in the project cycle and how to do it
- Define the role of the project promoter in working with a community
- Identify potential problems which can occur when there is insufficient community involvement

OVERVIEW

In the previous session the criteria were established for deciding if a community was ready to be involved in a project. In this session, we assume the community has committed itself to work and participate. What happens when a project is underway? How is the work organized? Who gets involved in what? What is the role of community leadership and of the project developer? What happens when problems occur in the project cycle? All these and other questions are addressed in this session.

PROCEDURES

1. Introduction — Time: 5/10 minutes

Restate the material in the overview in your own words to introduce the session. Go over the session objectives. Answer any questions about the goals and session rationale.

2. Introduction to Case Study — Time: 5 minutes

Before handing out the case study, the following will serve to introduce the task. "The case study you are about to read presents a situation which can happen, and often does, to the project promoter in working with a community group. Many of the issues in the case are similar to ones which you have probably encountered before and may encounter again. The case will allow us to bring

Previous Page Blank

out and examine the questions of community involvement. At the end of the case study there are a few questions listed. After reading the case study try to answer these questions by yourself. We will discuss them later in small groups." Distribute Handout 11-1: Case Study.

3. Reading the Case Study — Time: 20 minutes

4. Case Study Discussion: Small Groups — Time: 30 minutes

Depending on the number of trainees, form small groups of five to eight to discuss the case study questions and develop conclusions. If there is only a small number of trainees, the trainer may combine this step with the next one and do a full group discussion.

5. Small Group Reports — Time: 30 minutes

Ask each group to present its conclusions and analysis to the full group. Discuss the recommendations and come to general agreement on the case study questions.

(Note to Trainer: Discussion of the case study should reveal whom to involve in which decisions during project development. It should also raise questions about the role of committees, the role of the promoter, and the role of those who use the capped spring most, usually women and children. If these points do not come out, the trainer should develop questions which are more specifically directed to these concerns.)

6. Defining Community Participation Task — Time: 30-40 minutes

Provide the link to the previous exercise by stating: "The above task points out the need to consider who should be involved in the project and when and for which decisions they should be involved, along with many questions about the various roles involved in project development. One of the things you will need in the future as a project promoter is to consider and have available a set of guidelines for community involvement. We want to develop these guidelines here by doing the following task. We will fill out the following project checklist together as a group activity."

Have the participants review the stages of the project cycle (Handout 2-3) which were discussed on the first day of the workshop for a few minutes, individually, and ask them to think about how to fill out the following chart which has been written on the flipchart. (The five stages of the project cycle—preplanning, planning and design, construction, operation and maintenance, and evaluation—should be written on the flipchart. The first stage is given as an example.)

Project Stage	Who Should be Involved?	How to Involve Them
Example		
Pre-project planning study	People who use water source regularly Village Health Committee Village elders People with technical skills Official contacts: school teachers, health workers, possible contributors	Individual Interviews Visits to school/s Meetings with presentations

After the trainees have thought about the exercise for about ten minutes, have them brainstorm the chart/check list. Refine it as necessary.

If time permits, ask the trainees how best to organize and schedule which meetings and with whom.

7. Generalizing Time: 20 minutes

Now that the trainees have considered some of the problems involved in community participation and decided who to involve at the different stages of project development, ask the following questions to draw out conclusions and record the responses on a flipchart:

- What are the most important conclusions that can be drawn about community involvement in a spring capping project? (List)
- What should the project developer avoid in trying to achieve a high level of community participation? (List)
- What is the primary role of the project promoter in community involvement?
- What other things have you learned from this session?

8. Applying Time: 5/10 minutes

Explain that trainees can use the project checklist developed in this session in the future as a part of their project materials. Ask them to check over what

they have written down and add anything to their planning guide which now occurs to them based upon the summary.

9. Closure Time: 5 minutes

Refer back to the objectives of the session and check with the group to see if they have been met.

MATERIALS

Flipcharts for:

Session objectives
Chart for community participation tasks

Handouts:

11-1: Case Study

CASE STUDY

Project History

Trickling Spring is a community which the community promoter selected some months ago, after doing a technical feasibility study and a social inventory, as a very likely community for a spring capping project. Many of the springs in the area have dried up. Trickling Spring's water remains constant. However, due to the use of the spring by animals and for laundry purposes, the spring water has become contaminated. A hole has been dug to capture the available water.

During the project development phase the community promoter had worked with a local health committee formed by a nearby health clinic nurse. The committee consisted of two school teachers, two community mothers, and three village elders. Most of the committee's activity and work was done by one of the school teachers and the two community mothers, all women. The village elders were on the committee to lend it prestige, but took little interest in it.

The spring did not produce a great deal of water but it supplied the needs of the Trickling Spring community. In addition, people came from a neighboring village (about an hour's walk away) to get drinking water. That community was not involved in the health committee. The project promoter was very busy most of the time and had no transportation, except the occasional use of a vehicle belonging to a regional engineer in the department of health. Otherwise she had to get transportation from whatever vehicle was going to the community. Because of this limitation, the promoter worked mostly with the health committee and did not get involved with others in the community. The people on the health committee were very trustworthy and respected people.

During the meeting with the committee when the project was explained and the community responsibilities were discussed, the committee assured the project promoter that the community was very interested in capping the spring. Several of the children had recently been very sick and the clinic nurse said it was because the spring was contaminated. When the spring produced very little water, the available water became very muddy in the hole that had been dug to collect it. The community agreed to collect a small sum of money from each village family every month for six months in order to pay for the project materials. They also agreed to provide all of the labor if the promoter could arrange for the Ministry of Health to pay for one half of the cost of a skilled mason and provide the technical direction for the spring improvement.

On this basis, the promoter requested and received project approval from her supervisor. The Ministry would purchase the needed materials and deliver them when the community had paid its share of the costs.

Current Situation

The committee has collected half of the community's contribution, but the community refuses to give any more. One vocal and well known family in the community maintains that it is unfair that Trickling Spring should have to pay for all of the costs of the spring capping when the neighboring community will receive the benefits as well. The nurse who formed the health committee has

been transferred to another clinic and the health committee does not meet anymore. The supervisor of the project promoter has threatened to send the construction materials to another community because he does not believe this project will work. He has given the promoter one month to make the project function and come up with the community contribution. Otherwise, he will abandon the project.

Discussion Questions

1. Analyze the case study and decide what you would do to salvage the situation.

2. Discuss and list the possible mistakes the project promoter has made and the things you would do to avoid these mistakes.

Be prepared to present your recommendations on the first two questions to the other small groups that are also doing this exercise.

SYNOPSIS

SESSION 12: USE, MAINTENANCE, AND REPAIR

Total Time: 4 hours

PROCEDURES	TIME	HANDOUTS	FLIPCHART MATERIALS
1. Introduction	5 min.		Session Objectives
2. Group Discussion	30 min.		
3. Critical Incidents	60 min.	12-1: Examples of Spring Malfunction 12-2: Common Repair Strategies	
4. Lecturette	30 min.		Lecturette Notes
5. Small Group Work	60 min.		
6. Generalizing/ Applying	45 min.	Planning Guides (See Handout 2-5)	
7. Closure	5 min.		

SESSION 12: Use, Maintenance, and Repair

Total Time: 4 hours

OBJECTIVES

At the end of this session, trainees will be able to:

- Identify and solve common problems that cause springs to malfunction
- Identify the key tasks in proper operation and maintenance
- Assist the community in selecting a guardian and defining the job responsibilities

OVERVIEW

Any spring improvement system requires maintenance and repair if it is to be kept operational. Little long-term improvement for village water usage is accomplished if in five years the capped spring no longer functions as it should. This session is intended to help participants plan for the long-term operation of their improved springs and specifically how to provide maintenance and repair services. This session has no hands-on activities because the spring capping is too new. If an existing system is nearby, the session could be redesigned to include hands-on maintenance and repair activities.

PROCEDURES

1. Introduction — **Time: 5 minutes**

Present the information contained in the overview and share the session objectives.

2. Large Group Discussion — **Time: 30 minutes**

Ask the participants each to spend three or four minutes listing on paper what they anticipate would be the most common problems that will cause a spring to fail or malfunction. After three or four minutes, ask for examples of the problems they identified. Write these on the flipchart. Lead a discussion elaborating on these common problems. Avoid discussing repair strategies since that will follow this discussion.

(Note to Trainer: Following are common problems and their descriptions which can be used to supplement the thoughts and ideas of the trainees. The following could also be given as a lecturette. However, if a lecturette is used, it should be in place of the above large group discussion, not in addition to it as that would be redundant.)

Identifying Common Problems That Cause Springs to Malfunction and/or Fail

Even though there are no moving mechanical parts in the spring cap system, the water is continually flowing with erosive force through the soils and against the structure retaining the flow. The quality of spring water can also be damaging to concrete or metals. The following are common problems with springs.

- Undermining is probably the most common failure. The springflow erodes the soil beneath the foundation or retaining wall and mines or forms channel(s). The water no longer has sufficient height to flow out the pipe(s); instead it flows under the barrier along the ground and once again creates unsanitary conditions for water collection.

- Structures can fail for many reasons. The most common are uneven settling forcing slab or joints to crack, broken pipes, poor quality mortar dissolving and permitting flow between rocks, reinforcement damaged from exposure to weather or water, and vandalism.

- Change in flow due to clogging of spring or pipe system; clogging caused by monsoon floods and mud; drop in water table due to drought or topographic disturbance.

- Contamination due to multiple use, faulty protection, proximity of a latrine, toxic or unsanitary penetration of water table.

- Increase in number of users causes lines, inconvenience, and need for storage.

- Poor drainage causing muddy and unsanitary conditions.

- Since the water is safer after a spring is capped, the villagers often increase their usage. In fact villagers who customarily use other sources may start using the good spring. Thus, spring flow can become inadequate and the collection area crowded. There is now a need for storage or restricted use.

3. Critical Incidents Time: 60 minutes

Divide the trainees into three groups. Distribute Handout 12-1: Examples of Spring Malfunction and assign each group two of the above causes of spring malfunction. Give them 20 minutes to respond to the questions on their critical incidents and prepare to present their incidents and recommendations to the total group.

After the 20 minutes are up, have the groups take turns sharing their problems and strategies for repairs. Use 40 to 45 minutes for this discussion.

(Note to Trainer: The information contained in Handout 12-2: Common Repair Strategies can be used by the trainer to supplement trainee recommendations on how to make repairs. However, do not distribute the handout itself until the discussion is over. Then explain that the handout is useful for them to place in their materials, but that it doesn't necessarily contain information that has not been covered in the previous discussions.)

Many of the repair strategies developed to address spring malfunction may be necessary in the participants' areas. The following checklist includes repairs which they should become familiar with. Many breakdowns result from inadequate maintenance. Some require replacing or abandoning the structure.

Common Repair Strategies

- Reseal the interior face of the concrete or rock and mortar wall with mortar or clay to prevent leaks or failure.

- Repair the spring structure until it is level, at right angles, properly supported and securely connected to its different parts.

- Dig down into the sealed spring collection area to eliminate clogging; to deepen or realign channels for spring flow; to alter level of pipes; or to eliminate structural damage caused by roots.

- Provide a mortar patch between the spring flow and the foundation or deepen the foundation to prevent the spring from flowing under the retaining wall and/or foundation.

- Completely isolate the spring area from sources of contamination; i.e., eliminate a newly constructed latrine, install fencing to keep animals from destroying the natural earthen spring cover.

- Improve drainage to keep collection area dry and water away from the base of the wall and realign the splash pad to prevent the flow from eroding the ground.

- Replace or add overflow pipe(s) to relieve pressure from increased flow and/or install pipes at a lower level during dry periods to permit flow.

- Add a storage cistern to the spring cap structure in order to provide adequate water at peak collection times.

- Abandon the spring structure when the increased pressure of the spring collection pool forces the flow elsewhere or the spring water taste or quality is drastically altered.

4. Lecturette on Maintenance Procedures Time: 30 minutes

Explain that the tasks listed below will be essential for continued successful operation of the spring.

- Keep the diversion and drainage ditches open and flowing. Keep the sides of the channels from collapsing. Remove plant growth, debris, rocks, and dirt.

- Insure that there are no sources of contamination.

  Has anyone built a latrine nearby?

  Is anyone washing clothes where drainage could enter the spring?

Is there any stagnant water nearby?

- Inspect wall(s), pipe(s), mortar, steps, storage, filtration system, splash plate and other structural parts of the system for damage, leaks, shifts, fractures, roots, etc.

- Monitor the flow for clogging or changes. Clean sediment out of the pipes and channels through which spring water flows to user.

- Check overflow pipe screen.

- Isolate drinking water spring source by fencing if necessary.

- Educate children and newcomers through community outreach and school programs.

- Advocate other water or spring improvements within the village.

Discuss proper transport and storage of the drinking water. The quality of water must be protected from the spring until it is consumed. There are several important links in this chain of events.

- The vessel used for collecting water should be clean, sanitary, and covered.

- Hands and vessel should be washed at the spring before collection.

- Water should be carried home directly and guarded against the possibility of contamination.

- Water should be stored at home in a container which is periodically cleaned and covered to prevent contamination by dirty hands, glasses, animals, dust, etc.

- Water should be drawn for cooking or drinking in a sanitary manner (i.e., with a clean ladle or via a faucet at the bottom of an elevated container).

- Glasses should be clean and rinsed with drinking water before they are used.

If these steps are not understood and conscientiously followed, then the spring capping efforts may not have been worthwhile.

Disinfecting the spring may make the water taste bad and may be difficult or impossible to implement and expensive. Disinfection is not always effective in natural systems due to the difficulty of the disinfectant reaching all parts of the water source and being allowed to stand a sufficient time to destroy pathogens.

5. Small Group Work on Responsibilities of Spring Guardian — Time: 60 minutes

Explain that the best and most reliable procedures for use, maintenance, and repair are those the community can do for itself. The users need to understand

how to effectively use and maintain their improved water source. They also need someone from their own community who is responsible for spring maintenance and repair. Commonly this person is called a "guardian". However, some communities handle this responsibility differently. For example, members of the village health committee take turns. It is, in fact, not much work, perhaps requiring a visual inspection for an hour or so weekly. Major repairs calling for more labor would, of course, require assistance for the guardian.

Explain that we want to explore the role of guardian a bit more fully from these points:

- Who should be recruited for the job of guardian and how should this be done?
- What specifically would be this person's responsibilities?
- How should this person be trained and supervised?

Divide the trainees into three small groups, assign each group one of the above points, and ask it to make recommendations and share its recommendations with the total group. Give the groups 15 minutes or so to prepare, and then have each group present its recommendations to the total group. This will take 30 to 45 minutes.

6. Generalizing and Applying — Time: 45 minutes

Ask the trainees to reflect back on their discussions and work on the use, maintenance, and repair of springs and to identify what they believe to be the essential steps in providing effective spring maintenance and repair. Put this list on the flipchart (use about 15 minutes).

Then ask the trainees to work as individuals for the next ten minutes to plan how they would go about implementing the above steps for the successful operation of their first spring improvement system.

At the end of the 10 minutes, ask that each person join another colleague and share each other's plans. This sharing should take no more than 15 minutes.

Then give them ten minutes or so to work with their planning guides and get their notes together or whatever is required for them to document their learning and include it in their materials.

7. Closure — Time: 5 minutes

Summarize the session, refer to the objectives, and link to the next session which will be on user education strategies. Comment on how important users are to successful spring operation and explain that the next session will deal with the user's role in maintenance and repair.

MATERIALS

Flipcharts for:

Session objectives
Elements of lecturette notes on maintenance procedures (optional)

Handouts:

12-1: Examples of Spring Malfunction
12-2: Common Repair Strategies

EXAMPLES OF SPRING MALFUNCTION

Answer these four questions for each of the causes of spring malfunction which follow.

1. What is the problem(s)?
2. What might have caused it?
3. How would you repair it?
4. How could this have been prevented?

A. Flow from the pipe has dropped considerably. It is the rainy season, so you know it can't be drought.

B. Flow has diminished somewhat. You notice water is coming out from underneath the retaining wall.

C. You notice a crack has formed in the rock and mortar wall and the plastic PCV pipe is bending and deteriorating.

D. The villagers tell you the spring water isn't good anymore. They say the color and the smell have changed.

E. You notice a small stagnant pool of water is forming under the spring flow against the base of the wall.

F. The villagers tell you there isn't enough water to go around anymore. They complain about having to wait in lines to get water.

COMMON REPAIR STRATEGIES

- Reseal the interior face of the concrete or rock and mortar wall with mortar or clay to prevent leaks or failure.
- Repair the spring structure until it is level, at right angles, properly supported and securely connected to its different parts.
- Dig down into the sealed spring collection area to eliminate clogging; to deepen or realign channels for spring flow; to alter level of pipes; or to eliminate structural damage caused by roots.
- Provide a mortar patch between the spring flow and the foundation or deepen the foundation to prevent the spring from flowing under the retaining wall and/or foundation.
- Completely isolate the spring area from sources of contamination; i.e., eliminate a newly constructed latrine, install fencing to keep animals from destroying the natural earthen spring cover.
- Improve drainage to keep collection area dry and water away from the base of the wall and realign the splash pad to prevent the flow from eroding the ground.
- Replace or add overflow pipe(s) to relieve pressure from increased flow and/or install pipes at a lower level during dry periods to permit flow.
- Add a storage cistern to the spring cap structure in order to provide adequate water at peak collection times.
- Abandon the spring structure when the increased pressure of the spring collection pool forces the flow elsewhere or the spring water taste or quality is drastically altered.

Previous Page Blank

SYNOPSIS

SESSION 13: EDUCATION FOR SPRING USERS

Total Time: 3 hours

PROCEDURES	TIME	HANDOUTS	FLIPCHART MATERIALS
1. Introduction	5 min.		Session Objectives
2. Brainstorming	30 min.		
3. Small Group Work on Strategies for Training/Education	45 min.		Directions for Group Tasks
4. Small Group Work on Plans for Training/Education	45 min.	13-1: Session Topics	
5. Sharing Training Plans	30 min.		
6. Generalizing and Applying	15 min.	Planning Guides (See Handout 2-5)	Two Questions for Generalizing and Applying
7. Closure	5 min.		

Previous Page Blank

SESSION 13: Education for Spring Users

Total Time: 3 hours

OBJECTIVES

At the end of this session, trainees will be able to:

- Identify the skills and knowledge that users need
- Define the most effective learning strategies for working with communities
- Prepare and deliver a training session for users

OVERVIEW

Users of improved springs must have the ultimate responsibility for making certain the system functions properly and, in fact, supplies them with a safe, convenient supply of water. If this is the case, then users need to know and understand the basics of how to keep a capped spring functioning properly and how to protect their water supply all the way from the source to consumption.

This session is intended to help the trainees plan and implement appropriate user education strategies that will enable the villagers to assume responsibility for ensuring they have an effective spring and that their drinking water is safe.

PROCEDURES

1. Introduction — Time: 5 minutes

Present the information contained in the overview and share the session objectives.

2. Group Brainstorming — Time: 30 minutes

Have the group brainstorm a list of skills and knowledge users should have in order to effectively care for their spring and their drinking water. Put this list on the flipchart. (Ask trainees to refer to materials generated in Session 12.)

Then ask them to identify some strategies that could be used to get this information to the villagers. Put this list on the flipchart.

3. Small Group Work — Time: 45 minutes

Divide the trainees into groups of four. Have them discuss the following three points and prepare to share their conclusions in summary format with the total group. Give them 15 minutes. (Use a flipchart.)

Previous Page Blank

- What strategies have you used or seen used to educate the community about health issues (i.e., presentations, discussions, home visits, classes, etc.)?

- Which ones worked the best? Why?

- From this what can you deduce about how people learn?

Then lead the total group in a discussion based on these discussion points:

- Ask for several examples of strategies they have used to train or educate the community about particular issues.

- Ask which strategies worked best and why.

- Ask them for their ideas and thoughts about how people learn. Put these on the flipchart.

- Ask the group what kinds of methods and strategies were used in this workshop to promote learning. Would any of these be effective for use with the community?

This discussion should take no more than 30 minutes and should culminate in a list of ways people learn that emphasizes the need for the learner to be actively involved in the learning process. Comment that training and education strategies that involve the learner in active ways such as discussions, planning or problem solving meetings, and demonstrations followed by practice are all usually more effective than lectures and presentations which put learning in a passive role.

4. Small Groups Preparing User Training/Education Session — Time: 45 minutes

Distribute Handout 13-1: User Training Session Topics. Divide the trainees into four teams and give them this task:

> Plan how you would deliver a 60-minute user training/education session on one of the following topics. Decide who your target group is (mothers, school children, health committee, etc.) and what is the setting (school, religious meeting, clinic, etc.). Take 30 minutes for this preparation.

A. Water and Your Life

Cover some or all of these points:

- List/discuss uses of water.

- What is the most important use of water for people in your community?

- What kind of water can make people ill?

- What happens when you drink water that is not clean?

- Who gets sick most often?

- What can you do so children don't get diarrhea often?

B. Collecting, Storing, and Using Water

Cover some or all of these points

- What sources of water do people use in your community?
- Which sources have the best water for drinking?
- Some communities have clean water but children still get diarrhea. Why?
- How do people in your community collect water?
- How do people store water?
- How can water get dirty?
- What are some things a mother can do so her child gets clean water?

C. Using your New Capped Spring

Cover some or all of these points.

- Why is this spring a source of clean water?
- What needs to happen to keep the water clean?
- How can the spring be protected from damage?
- What should be watched for that could mean the spring needs repairing?
- Who should you report these repair needs to?

When the 30 minutes are up, give the groups another five to eight minutes to prepare to describe their session to another group.

5. Sharing Training Plans Time: 30 minutes

Have two small groups join together to share training plans. (Two of these will be conducted simultaneously with one trainer in each.) Each team should take eight to ten minutes to describe its plan. Then the other group should take five to eight minutes to offer feedback—suggestions, comments, or advice on how it might be improved.

Each team should have no more than 15 minutes or so both to describe its plan and to receive feedback. Then the roles would reverse and the other team would present its plan and receive feedback.

6. Generalizing and Applying Time: 15 minutes

Have the trainees work individually with the following two questions which you have put on a flipchart:

- What do I feel are the essentials of an effective community education program for use of capped springs?
- What are some strategies I plan to use in my community in order to cover the essentials I have listed?

Suggest that they incorporate these into their planning guides.

7. Closure Time: 5 minutes

Summarize, refer to the objectives, link to tomorrow's training activities, and close the session.

MATERIALS

Flipchart for:

Session objectives
Directions for small group tasks
Two generalizing and applying questions

Handouts:

13-1: User Training Session Topics

USER TRAINING SESSION TOPICS

A. Water and Your Life

List/discuss uses of water.
What is the most important use of water for people in your community?
What kind of water can make people ill?
What happens when you drink water that is not clean?
Who gets sick most often?
What can you do so children don't get diarrhea often?

B. Collecting, Storing, and Using Water

What sources of water do people use in your community?
Which sources have the best water for drinking?
Some communities have clean water but children still get diarrhea. Why?
How do people in your community collect water?
How do people store water?
How can water get dirty?
What are some things a mother can do so her child gets clean water?

C. Using your New Capped Spring

Why is this spring a source of clean water?
What needs to happen to keep the water clean?
How can the spring be protected from damage?
What should be watched for that could mean the spring needs repairing?
Who should you report these repair needs to?

SYNOPSIS

SESSION 14: SPRING SITE COMPLETION

Total Time: 4 Hours

	PROCEDURES	TIME	HANDOUTS	FLIPCHART MATERIALS
1.	Introduction	5 min.		Session Objectives
2.	Lecturette	30 min.	14-1: Lecturette Notes	
3.	Preparation for Field Work	10 min.	14-2: Completed Spring	
4.	Field Work	2 hrs.		
5.	Discussion	30 min.		
6.	Generalizing and Applying	20 min.	Planning Guides (See Handout 2-5)	
7.	Closure	5 min.		

SESSION 14: Spring Site Completion

Total Time: 4 hours

OBJECTIVES

At the end of this session, trainees will be able to:

- Inspect spring system parts and make any needed repairs or adjustments before closure
- Seal and backfill excavated spring area to construct earth spring cover
- Erect fence to keep animals away from water source
- Identify activities that would make the spring site more attractive and pleasant for users

OVERVIEW

Now that all the structures of the spring system are completed, it is time to complete the system with the earth spring cover. All parts of the system should be inspected. The earth cover must be completed. The site needs to be cleaned and made attractive for users, and the completion of the project should be celebrated. This session is intended to enable the trainees to learn how to do these activities. A labor force will be necessary to assist in the field work.

PROCEDURES

1. Introduction — Time: 5 minutes

Present the materials in the overview and share the objectives for the session.

2. Lecturette on Spring Cap Closure Activities — Time: 30 minutes

Use a flipchart for this lecturette. Tell the trainees that a handout with the information in the lecturette will be distributed at the end. Explain that there are 7 steps to closing the spring and finishing the site. They are:

1) Inspection of completed work

2) Repair or corrections on work completed

3) Disinfection

4) Sealing and backfilling excavated spring

5) Fencing

Previous Page Blank

6) Spring cap cleanup

7) Presentation to guardian, health committee or villagers

Elaborate on each of the steps, covering the following points:

1) Inspection of spring cap structure, fl[illegible], and pipes

- Check the cured rock and mortar wall, foundation, clay wall and remaining structural components regarding [illegible]nent, damage, joints, leaks, cracks, connections, settli[illegible] [illegible]ealing (watertight), leveling, and appearance.

- Check the support of retaining walls, earthen side walls, access steps, and drainage channels.

- Check quantity, i.e., liters per minute of flow. Has it changed substantially from earlier measurements?

- Check quality of spring water, i.e., taste, clarity, smell, etc.

- Check for protection and channelling of spring flow away from spring structure.

- Check connection and slope of pipe(s) from spring flow collection pool through wall to user's container.

- Check to see if water is flowing under or around places other than through the pipe.

2) Obviously, any problems discovered during inspection must be resolved before the spring is backfilled and closed.

3) Disinfection of a natural flowing system such as this capped spring is difficult. A storage container/tank or spring box has smooth interior surfaces which can be easily washed, disinfected and cleaned out; whereas a natural rock, sand, earth system may absorb and retain the bad tasting disinfectant and/or not be fully disinfected. Within a day's time, cleansing and clearing of disturbed muddy water will occur from the natural spring flow. However, the water should not be used or collected for drinking during this cleanup and closure period.

4) Sealing and backfilling excavated spring

Now the spring can be closed and protected by following these steps:

- Within the clay wall surrounding the spring flow, rocks and gravel should be spread over the entire excavated area to an even level at least 20 cm above the water in the collection pool. All of the holes between the rock channels and earth sides should be filled with small gravel until the water cannot be seen.

- Good quality clay should be placed on top of the rocks and gravel, tamped and puddled in four to five layers of 3 cm each for a total layer of 10-15 cm that will make a seal to prevent surface water (rain runoff) from seeping down through the soil into the collection pool. If a smooth layer of earth and sand is placed over the rocks and gravel to prevent puncture, a sheet of thick, durable plastic can be laid across the cover. This may be expensive and difficult to find but will certainly form a seal against surface water.

- Now, the remaining clean fill material from the excavation can be placed across the seal sloping downward from the excavation behind the retaining wall to the top of the retaining wall.

- A 20/25 cm layer of top soil will permit shallow-rooted plants to prevent erosion and improve the appearance of the newly constructed site.

- Large, flat rocks should be placed over the intake screen to the pipe and spring-flow channels.

5) Fencing

A fence around the spring site will serve to protect the area from contamination by domestic and agricultural animals which can otherwise drink from the outlet pipe and foul the area. As discussed earlier in Session 2 (Handout 2-2), animals are one means of water supply contamination.

- A fence can be constructed with barbed wire on wooden posts, or made from wooden rails or stones. The fence can be erected alongside the drainage diversion ditches, as shown in Handout 6-1.

- A good durable fence probably cannot be constructed during the training period of two weeks. However, the public health advantages of a fence should be explained to the trainees, who should encourage fence construction in their own projects.

6) Spring cap cleanup

The following can influence feelings of ownership, convenience, responsibility, and pride in the newly improved spring site.

- Removal of piles of dirt and construction materials from the excavation site

- A dry, clean, smooth area with a durable splash pad beneath the pipe for collecting water

- A hazard-free route from the village to the spring area, possibly including steps and pathways

- The location of a laundry pad below the collection area where water is convenient, the area is not muddy, and the wash water can drain readily without affecting the spring. Laundry pads should be covered with a smooth stone since concrete will eventually wear out clothes.

7) Presentation to guardian, health committee, and villagers

- Explain the basic construction and operation of the capped spring.
- Demonstrate the importance of users safeguarding and maintaining the quality of the water from the time they collect it until they drink it.
- Explain who can be contacted for repairs and technical assistance.
- Celebrate and drink the water together!

Distribute Handout 14-1: Lecturette Notes

3. Preparation for Field Activities — Time: 10 minutes

Explain that for today the group will be working on these activities.

Field Activity No. 1: Inspection of the Structure, Flow, and Pipes

Field Activity No. 2: Sealing and Backfilling the Excavated Spring

Field Activity No. 3: Planning Cleanup Activities (to be completed by work force)

Distribute Handout 14-2: Completed Spring Showing Earth Cover.

Depart for site.

4. Field Work — Time: 2 hours

Field Activity No. 1: Inspection of the Structure, Flow, and Pipes

Divide the group into four teams. Assign two different inspection activities to each team. Give them 5 minutes to do their inspection, then lead brief discussions around each item that was inspected. (This should take 30 to 40 minutes.)

Field Activity No. 2: Sealing and Backfilling the Excavated Spring

Have the teams begin working on the sealing and backfill activities. Use the labor force where appropriate to save time. (Perhaps Field Activity No. 3 could be interspersed while the labor force works on backfilling.) The labor force could

have begun some activities before the trainees arrived. The idea is to provide learning opportunities for backfilling and sealing without staying in the field over 2 hours.

Field Activity No. 3: Planning Cleanup Activities

Ask the group to identify activities needed to finish the site so that it is pleasant and attractive to users. Use 10 minutes or so.

5. Workshop Discussion Session — Time: 30 minutes

Lead a group discussion, focused on these questions (up to 30 minutes):

- Which of our activities today did you find the most difficult?
- Why?
- How could these things be made easier?

6. Generalizing and Applying — Time: 20 minutes

Ask the group to review the steps necessary to carry out the appropriate activities for completing the spring cap closure. Put the list on the flipchart.

Then ask that they take 15 minutes to work with their planning guides.

7. Closure — Time: 5 minutes

Summarize what they learned, refer to the objectives, and close the session.

MATERIALS

Flipcharts for:

Session objectives
The seven steps to closing spring

Handouts:

14-1: Lecturette Notes: Closing the Spring
14-2: Completed Spring Showing Earth Cover

Advance Preparation

Labor force to complete the backfilling

LECTURETTE NOTES: CLOSING THE SPRING

There are seven steps to closing the spring and finishing the site. They are:

1) Inspection of completed work

2) Repair or corrections on work completed

3) Disinfection

4) Sealing and backfilling excavated spring

5) Fencing

6) Spring cap cleanup

7) Presentation to guardian, health committee or villagers

Each of the points is discussed below

A. Inspection of spring cap structure, flow, and pipes

- Check the cured rock and mortar wall, foundation, clay wall and remaining structural components regarding alignment, damage, joints, leaks, cracks, connections, settling, sealing (watertight), leveling, and appearance.

- Check the support of retaining walls, earthen side walls, access steps, and drainage channels.

- Check quantity, i.e., liters per minute of flow. Has it changed substantially from earlier measurements?

- Check quality of spring water, i.e., taste, clarity, smell, etc.

- Check for protection and channelling of spring flow away from spring structure.

- Check connection and slope of pipe(s) from spring flow collection pool through wall to user's container.

- Check to see if water is flowing under or around places other than through the pipe.

2) Obviously, any problems discovered during inspection must be resolved before the spring is backfilled and closed.

 Preceding Page Blank

3) Disinfection of a natural flowing system such as this capped spring is difficult. A storage container/tank or spring box has smooth interior surfaces which can be easily washed, disinfected and cleaned out; whereas a natural rock, sand, earth system may absorb and retain the bad tasting disinfectant and/or not be fully disinfected. Within a day's time, cleansing and clearing of disturbed muddy water will occur from the natural spring flow. However, the water should not be used or collected for drinking during this cleanup and closure period.

4) Sealing and backfilling excavated spring

Now the spring can be closed and protected by following these steps:

- Within the clay wall surrounding the spring flow, rocks and gravel should be spread over the entire excavated area to an even level at least 20 cm above the water in the collection pool. All of the holes between the rock channels and earth sides should be filled with small gravel until the water cannot be seen.

- Good quality clay should be placed on top of the rocks and gravel, tamped and puddled in four to five layers of 3 cm each for a total layer of 10-15 cm that will make a seal to prevent surface water (rain runoff) from seeping down through the soil into the collection pool. If a smooth layer of earth and sand is placed over the rocks and gravel to prevent puncture, a sheet of thick, durable plastic can be laid across the cover. This may be expensive and difficult to find but will certainly form a seal against surface water.

- Now, the remaining clean fill material from the excavation can be placed across the seal sloping downward from the excavation behind the retaining wall to the top of the retaining wall.

- A 20/25 cm layer of top soil will permit shallow-rooted plants to prevent erosion and improve the appearance of the newly constructed site.

- Large, flat rocks should be placed over the access holes to the pipe and spring-flow channels.

5) Fencing

A fence around the spring site will serve to protect the area from contamination by domestic and agricultural animals which can otherwise drink from the outlet pipe and foul the area. As discussed earlier in Session 2 (Handout 2-2), animals are one means of water supply contamination.

- A fence can be constructed with barbed wire on wooden posts, or made from wooden rails or a stone wall. The fence can be erected alongside the drainage diversion ditches, as shown in Handout 6-1.

- A good durable fence probably cannot be constructed during the training period of two weeks. However, the public health advantages of a fence should be explained to the trainees, who should encourage fence construction in their own projects.

6) Spring cap cleanup

The following can influence feelings of ownership, convenience, responsibility, and pride in the newly improved spring site.

- Removal of piles of dirt and construction materials from the excavation site

- A dry, clean, smooth area with a durable splash pad beneath the pipe for collecting water.

- A hazard-free route from the village to the spring area, possibly including steps and pathways

- The location of a laundry pad below the collection area where water is convenient, the area is not muddy, and wash water can drain readily without affecting the spring. Laundry pads should be covered with a smooth stone since concrete will eventually wear out clothes.

7) Presentation to guardian, health committee, and villagers

- Explain the basic construction and operation of capped spring.

- Demonstrate the importance of users safeguarding and maintaining the quality of the water from the time they collect it until they drink it.

- Explain who can be contacted for repairs and technical assistance.

- Celebrate and drink the water together!

COMPLETED SPRING SHOWING EARTH COVER

SLOPE (maximum pitch - 2 horizontal to 1 vertical)

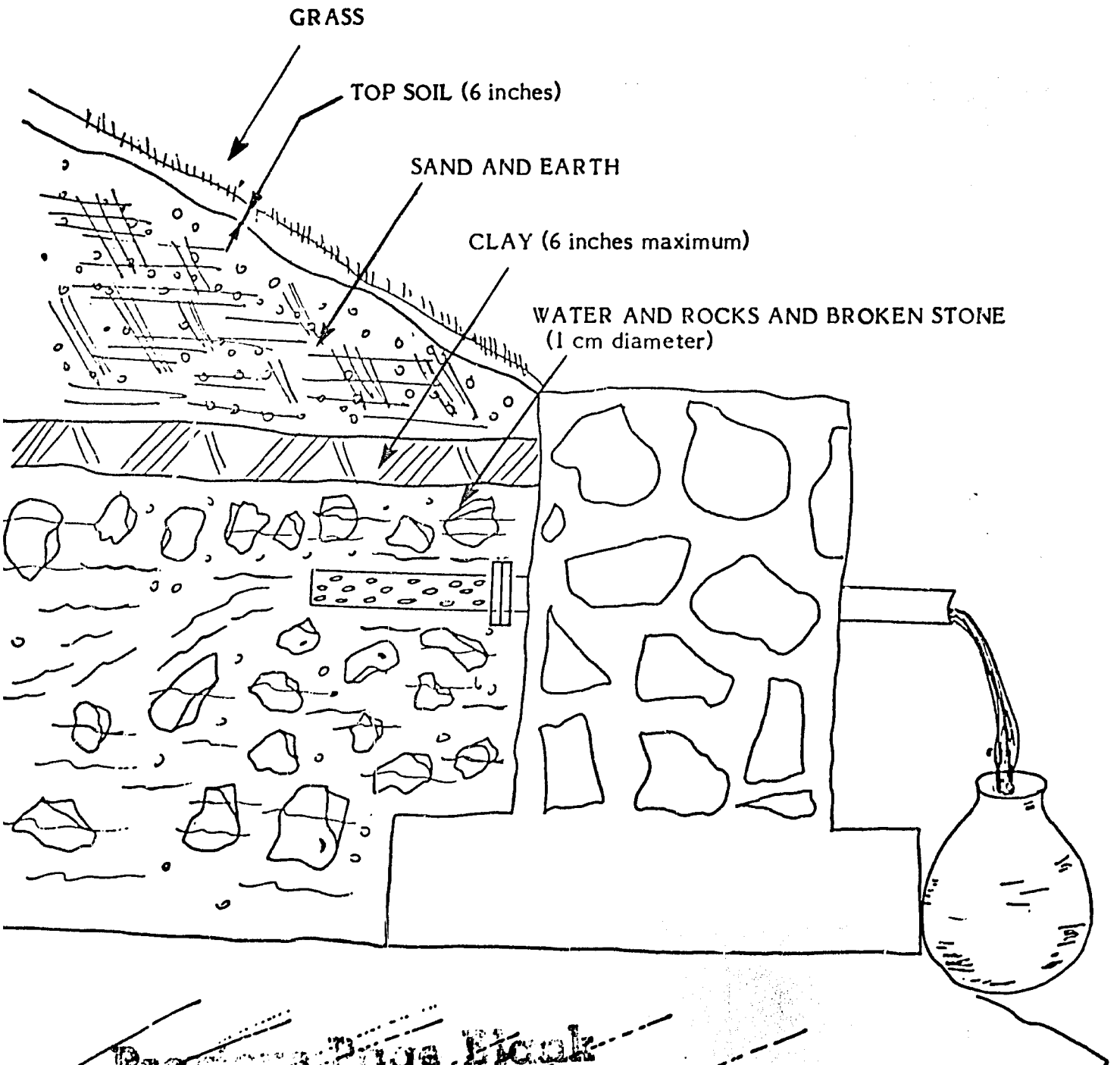

Previous Page Blank

SYNOPSIS

SESSION 15: PLANNING FOR SPRING CAPPING PROJECTS

Total Time: 3½ hours

PROCEDURES	TIME	HANDOUTS	FLIPCHART MATERIALS
1. Introduction	5 min.		Session Objectives
2. Planning Steps	10 min.		
3. Small Group Work	60 min.	15-1: Three Planning Tasks	
4. Group Reports	75 min.		
5. Generalizing and Applying	45 min.	Planning Guides (See Handout 2-5)	
6. Closure	5 min.		

Previous Page Blank

SESSION 15: Planning for Spring Capping Projects

Total Time: 3½ hours

OBJECTIVES

At the end of this session, trainees will be able to:

- Plan for labor force needed for a spring capping project
- Plan for needed materials and tools
- Schedule all construction activities in proper sequence, estimating amount of time required for each

OVERVIEW

Carrying out a spring development project requires careful planning and preparation. Since the project involves water sources that are in constant use, a good many things need to be coordinated in order to complete the project smoothly and quickly to avoid undue disruption in the use of the spring. Decisions have to be made about what is the best way to improve the spring; these improvements have to be designed; costs must be estimated and budgets prepared; materials have to be ordered, and labor recruited and hired.

This session will prepare the trainees to carry out these planning responsibilities.

PROCEDURES

I. Introduction — Time: 5 minutes

Present the information in the overview, and share the objectives. Link this planning session to the appropriate previous sessions in the workshop, the session on preparing for construction, the construction sessions themselves, and the session on planning the first spring capping project. Emphasize the importance of planning.

2. Planning Steps — Time: 10 minutes

Reintroduce the six planning steps that were covered in Session 5 on preparing for construction:

- o Investigating the spring site
- o Determining location and design for the spring structure

- Pipe, materials, and tools
- Labor requirements
- Costs/budget
- Time schedule

Comment briefly on each one of these steps. Explain that the trainees worked on the first two steps before they began construction. Now that they are familiar with construction activities, it is appropriate to look at the other planning steps.

3. Small Group Work — Time: 60 minutes

Distribute Handout 15-1: Three Planning Tasks. Explain what each planning team will do. Divide the total group into three planning teams. Have the teams each work on one planning task. Give them one hour to develop their plans, put the plans on flipcharts, and prepare to present the plans to the total group.

During this hour the trainers will act as consultants to the teams, remembering that each team can use only 10 minutes of consultant time. (Do not count time needed to clarify the task.)

4. Group Reports — Time: 75 minutes

Have each group take 10 to 15 minutes to present its plans to the total group. Use the next 10 minutes or so in a general discussion on this type of planning. Use no more than 25 minutes per group. Repeat the process for each group.

5. Generalizing and Applying — Time: 45 minutes

Have the trainees reflect individually for five minutes or so, writing down the most important things they learned about planning for construction from this practice exercise in planning. After five minutes or so ask them for examples. Write them on the flipchart. Use about 15 minutes.

Ask the trainees to work on their planning guides in preparation for their own spring development project. Give them 20 to 30 minutes.

6. Closure — Time: 5 minutes

Summarize the session, refer to the objectives, and close the session.

MATERIALS

Flipcharts for:

Session objectives

Handout:

15-1: Three Planning Tasks

THREE PLANNING TASKS

Planning Task A

Your group is to organize and plan for the labor force needed to complete the construction phase of this project. Use your construction guides for the information you need. Your trainers are to serve as consultants to all three groups. Organize the help you want and the questions you have for the consultants so that you are able to use your consultant's time wisely. You can use up to 10 minutes of consultant time, either all at one time or on two different five-minute occasions.

The points your group should address are:

- What labor must be performed?
- What skills are required?
- What type of workers are needed (i.e., masons, carpenters, laborers, etc.)? How many?
- How would you recruit them?
- Approximately how long would each be needed (how many days or half days)?
- Approximately how much will this cost?
- How much of your time as project manager will it take to put this work team together?

Planning Task B

Your group is to organize and plan for the materials and tools needed to complete the construction phase of this project. Use your construction guides for information you need. Your trainers are to serve as consultants to all three groups. Organize the help you want and the questions you have for the consultant so that you are able to use your consultant's time wisely. You can use up to 10 minutes of consultant time, either all at one time or on two different five-minute occasions.

The points your group should address are:

- What materials are needed?
- Where can they be obtained?
- How will they be transported?
- How much will this cost?

- What substitutions could be made if the materials aren't available?
- What tools are necessary?
- Where can you get them?
- How much will they cost?
- How will you arrange for storage of materials and tools?
- How much of your time as project manager will the securing of labor and materials take?

Planning Task C

Your group is to organize a work plan needed to complete the construction phase of this project. Concentrate on scheduling activities and estimating how long each will take. Use your construction guides for information you need. Your trainers are to serve as consultants to all three groups. Organize the help you want and the questions you have for the consultant so that you are able to use your consultant's time wisely. You can use up to 10 minutes of consultant time, either all at one time or on two different five-minute occasions.

The points your group should address are:

- What are the activities required to complete the construction phase?
- In what sequence are they performed?
- Approximately how long will each activity take?
- What might you expect that could interrupt or delay this plan?
- How will you plan to handle delays?
- What does the project manager have to do to get ready for these construction activities? How long will it take?

SYNOPSIS

SESSION 16: EVALUATING THE DEMONSTRATION SPRING CAPPING PROJECT

Total Time: 2 hours

PROCEDURES	TIME	HANDOUTS	FLIPCHART MATERIALS
1. Introduction	5 min.		Session Objectives
2. Reviewing and Evaluating in Small Groups	45 min.	16-1: Checklist	
3. Group Discussion	30 min.		
4. Conclusions	15 min.		
5. Application and Closure	15 min.	Planning Guides (See Handout 2-5)	

SESSION 16: Evaluating the Demonstration Spring Capping Project

Total time: 2 hours

OBJECTIVES

By the end of this session the participants will be able to:

- Evaluate the strengths and weaknesses of the demonstration project and identify ways to improve future projects
- Describe simple, basic steps useful in evaluating spring projects

OVERVIEW

Knowing how to evaluate a project is an important skill for any project manager. In this session the training group will have an opportunity to critically review all that has been done in the demonstration project. Both successful elements and areas of difficulty will be identified. The group will make recommendations on how to improve further spring capping project efforts.

PROCEDURES

1. Introduction — Time: 5 minutes

Review the rationale of the session presented in the overview. State the objectives and answer any questions that arise.

2. Reviewing and Evaluating in Small Groups — Time: 45 minutes

Distribute Handout 16-1: Checklist for Evaluating a Spring Capping Project. Go over the items on the checklist. Amplify or clarify points when needed.

Divide the trainees into trios. Ask each trio to work together to complete these tasks:

- Complete and respond to the items on the checklist in terms of the demonstration project.
- Identify the elements of this project that worked especially well.
- Identify difficulties and/or problems and make recommendations for how improvements could be made.
- Prepare to share your analyses with others.

Give each trio about 35 minutes to complete the tasks.

Previous Page Blank

3. Group Discussion Sharing Analyses Time: 30 minutes

Have each trio join another trio, forming groups of six. Ask them to share their analyses and their responses to the Evaluation Checklist. Give them 20 minutes.

Lead a total group discussion of the following two questions and put the responses on the flipchart. This should take about 10 minutes.

- What did you identify as elements in the project that went especially well? Not so well?
- What recommendations did you make for improvement?

4. Conclusions on How to Evaluate Projects Time: 15 minutes

Ask the group to comment on why they feel evaluating a recently-completed project would be useful. Explain that evaluation is the key to continually looking for better, more resourceful ways of completing a project.

5. Application and Closure Time: 15 minutes

Ask the participants to spend a few minutes working with their planning guides to write down their thoughts and ideas on how they will evaluate their first spring project. Refer to the objectives and close the session.

MATERIALS

Flipchart for:

Session objectives

Handout:

16-1: Checklist for Evaluating a Spring Capping Project

CHECKLIST FOR EVALUATING A SPRING CAPPING PROJECT

Name _____

Date _____

Spring _____

1. Is the spring flow adequate for the users?

2. Is the spring cap design satisfactory? (Is it sanitary, useful, and attractive in appearance? Is it a source of community pride?)

3. Is the structure sound and solid?

4. Were the materials adequate and effective? Was there maximum use of local materials?

5. Was the labor force adequate? Who worked?

6. How much did the project cost? Who paid for it?

7. Was community participation adequate?

8. Is the spring flow drainage operating satisfactorily and is it maintainable?

9. Is the spring protected from contamination and surface waters?

10. Will the villagers reserve this spring for drinking and cooking water and do their laundry and water their animals elsewhere?

11. Does the water quality satisfy the users? (Taste, clarity, etc.)

12. Is someone responsible for maintenance?

13. Are the villagers aware of the benefits of keeping the water pure while they carry, store, and use it at home?

14. Is the spring convenient to use?

15. Are the users satisfied?

16. Does the improved spring area look nice?

17. Other comments.

SYNOPSIS

SESSION 17: ALTERNATIVE SPRING DEVELOPMENT TECHNOLOGIES

Total Time: 4½ hours

	PROCEDURES	TIME	HANDOUTS	FLIPCHART MATERIALS
1.	Introduction	5 min.		Session Objectives
2.	Small Group Work	45 min.	17-1: Designing Structures 17-2: Constructing Structures 17-3: Maintaining Structures 17-4: Spring Box 17-5: Seepage Collection 17-6: Storage Tank	Small Group Tasks
3.	Group Reports	60 min.		
4.	Construction Planning	30 min.	17-7: Two Spring Capping Situations	
5.	Sharing Plans	60 min.		
6.	Generalizing	30 min.		
7.	Application	30 min.		
8.	Closure	5 min.		

SESSION 17: Alternative Spring Development Technologies

Total Time: 4 ½ hours

OBJECTIVES

At the end of this session, trainees will be able to:

- Describe how three other spring capping systems function
- Identify differences and similarities between these systems and the spring capping project in this workshop
- Describe site conditions that determine how spring capping systems are designed
- Identify ways to obtain assistance in capping an alternative type of spring

OVERVIEW

This workshop was designed to improve springs where a retaining wall is the most appropriate way to do it. This is a very basic design which can be used in a number of situations. However, there are other types of springs as well as other conditions which call for other spring capping systems.

This session is intended to enable the trainees to learn more about alternative spring capping systems. They will work primarily on systems for springs that are located in a flat area and/or where an infiltration collection system is required.

PROCEDURES

1. Introduction — Time: 5 minutes

Present overview and objectives for the session.

2. Small Group Work — Time: 45 minutes

Distribute Handouts 17-1, 17-2 and 17-3: Water for the World articles. Explain they are to be used for general reference.

Refer to the three types of springs that were presented in Session 2, Introduction to Spring Development. Ask if anyone will be needing to work with a

spring where a retaining wall would not be an appropriate structure. Explain that this next exercise is intended to familiarize them with three additional types of spring improvement technologies: a spring box system, a seepage collection system, and storage tanks. Divide the total group into three groups, give each group the Handout (17-4, 17-5, or 17-6) which describes its system, and give the groups 30 minutes to do the following:

- Describe the basic components of your spring improvement system.
- What are the conditions which would require this type of system?
- In what way is this new system different from or similar to the system used in the training project?
- Prepare a presentation of no more than ten minutes to share your analyses with your colleagues.

(Note to trainer: It would be a good idea to divide the total group into three smaller groups and distribute Handouts (17-4, 17-5, or 17-6) for reading the night before.)

3. Group Reports — Time: 60 minutes

Have each group present its analyses to the total group. This presentation should take no more than ten minutes. Then encourage questions and discussion for another ten minutes to make certain everyone understands that particular spring capping system. Repeat this process for the other two groups.

4. Planning How to Construct Alternative Designs — Time: 30 minutes

Present the two spring capping situations described below. Explain that each trainee will have an opportunity to work in some detail with construction planning for one of the situations and will listen to and discuss someone else's plans for the others.

Have each trainee choose one of the alternatives to work on and then join with one other person, working on the problem as a two-member team.

Distribute Handout 17-7: Two Spring Capping Situations and go over the questions the trainees are to answer. Explain that they should use Handouts 17-1 through 17-6 to respond to the questions. Give them 30 minutes.

Spring A

Springwater flows up into an open hole in a flat, sandy area. It often fills the hole and spills out onto the sides, which become muddy. Villagers step across stones to get to this waterhole. Animals also sometimes come to drink. There is always enough water in the hole for many villagers to dip their containers and collect water. How would you cap this spring in order to protect it from contamination and let the spring flow directly into the villagers' water containers?

- How would you investigate the flow?
- What type of spring structure would you use? How would it remain stable?
- How would you protect the spring flow?
- How would you excavate? How big an area? What slope?
- How would you drain and clean up the area?
- What materials would you need? How much?

Spring B

At present there is a small trickle of water flowing down from several points across a rocky hillside. This collects in several small, silty clay depressions side by side at the bottom of the hill. Villagers come to gather water in their containers from these open pools covered with algae. There is adequate slope down the valley, but water flowing out of the pools now collects in a stagnant marshy pond. How could you cap this spring?

- How would you investigate the flow?
- How would you make this into one spring and service pipe under these conditions?
- What type spring structure would you use?
- How big an area would you excavate? What slope? How deep?
- How would you drain and clean up the area?
- What materials would be required?

5. Sharing Plans — Time: 60 minutes

Have all the two-member teams who worked on Spring A meet together with one trainer while those who worked with Spring B meet together with the other trainer. Spend 20 minutes or so sharing analyses and discussing the issues or problems involved.

Then have each two-member team that worked on Spring A join with a two-member team that worked on Spring B. (The entire group will now be in sub groups of four.) The team that worked on Spring A would then take 10/15 minutes to share its analyses with the team that worked on Spring B. Then the team that worked on Spring B would take 10/15 minutes to present its analyses to the team that worked on Spring A. This exchange should take no more than 30 minutes.

6. Generalizing — Time: 30 minutes

Ask the total group these generalizing questions:

- What are the site conditions that determine how spring capping systems are designed?
- What are the basic components of a spring box system on a flat surface?
- What are the primary difficulties one might have constructing this?
- What are the basic components of a seep collection system?
- What are the primary difficulties in building this system?
- What are the basic components of a system using a storage tank?

7. Application — Time: 30 minutes

Have all participants spend 15 to 20 minutes working with their planning guides. Then ask the group these questions: "If you have difficulty capping one of these alternative type springs, where could you obtain assistance?" "What would you do if your system didn't work?" Lead a discussion of what to do if a project fails. Help trainees plan how they might handle it.

8. Closure — Time: 5 minutes

Summarize the session, refer to the objectives, and close the session.

MATERIALS:

Flipcharts for:

Session objectives
Small group tasks

Handouts:

Water for the World articles

17-1: Designing Structures for Springs
17-2: Constructing Structures for Springs
17-3: Maintaining Structures for Springs

Alternative spring improvement systems

17-4: Spring Box Systems
17-5: Seepage Collection System
17-6: Storage Tank

17-7: Two Spring Capping Situations

Water for the World

Designing Structures for Springs

Technical Note No. RWS. 1.D.1

Protective structures are a very important part of developing springs as sources for a community water supply. A properly designed protective structure ensures an increased flow from the spring. To protect the spring, silt, clay and sand deposited at the spring outlet, and other material washed down from the slope by surface run-off, must be cleared away. When these materials are removed, water flow increases. Clearing away vegetation from the spring effluent will also allow better flow. A protective structure will improve the accessibility of the water. By channeling the spring flow into one collection area, a good quantity of water can be stored for the community. Spring water can be distributed to community standpipes or to individual houses. A third benefit of a protective structure is that it protects the spring water from contamination.

This technical note discusses the design of structures used to protect and develop springs for community water supplies and makes suggestions for spring development in a specific area. The design chosen for a particular project will depend on local conditions, materials available and spring yield. Read this entire technical note and refer to "Selecting a Source of Surface Water," RWS.1.P.3, before choosing a design that will best meet a community's needs.

The design process should result in the following three items which should be given to the construction supervisor:

1. A map of the area. Include the location of the spring; the locations of users' houses; distances from the spring to the users, elevations, and important landmarks. Figure 1 is a map of a small village with a spring located on high ground above it. A map of this type is useful in helping the people building the spring box locate the spring site.

Useful Definitions

DISCHARGE - The flow of water from an opening in the ground or from a pipe or other source.

EFFLUENT - At a spring site, the point from which water leaves the ground.

GROUT - A thin mortar used to fill chinks, as between tiles.

HEAD - Difference in water level between the inflow and outflow ends of a system.

HYDRAULIC GRADIENT - The measure of the decrease in head per unit of distance in the direction of flow.

MORTAR - A mixture of cement or lime with water in a basic proportion of 4 units of sand to 1 unit of cement or lime.

PERPENDICULAR - Exactly upright or vertical; at a right angle to a given line or plane.

PUDDLED CLAY - A mixture of clay with a little water so clay is workable.

REINFORCING ROD - Steel bars placed in concrete structures to give it tensile strength.

UNDERFLOW - Flow of water under a structure.

2. A list of all labor, materials and tools needed as shown in Table 1. This will help make sure that adequate quantities of materials are available so construction delays can be prevented.

3. A plan of the spring box with all dimensions as shown in Figure 2. This plan shows a top, side, and front view, and the dimensions of a cover for a spring box 1m x 1m x 1m.

Table 1. Sample Materials List

Item	Description	Quantity	Estimated Cost
Labor	Foreman	____	____
	Laborers	____	____
Supplies	Portland cement	____	____
	Clean sand and gravel, if available, or locally available sand and gravel	____	____
	Water (enough to make a stiff mixture)	____	____
	Wire mesh or reinforcing rods	____	____
	Galvanized steel or plastic pipe (for outlets, overflow, and collectors)	____	____
	Screening (for pipes)	____	____
	Boards and plywood (for building forms)	____	____
	Old motor oil or other lubricant (for oiling forms)	____	____
	Baling wire	____	____
	Nails	____	____
Tools	Shovels and picks (or other digging tools)	____	____
	Measuring tape or rods	____	____
	Hammer	____	____
	Saw	____	____
	Buckets	____	____
	Carpenter's square or equivalent (to make square edge)	____	____
	Mixing bin (for mixing concrete)	____	____
	Crowbar	____	____
	Pliers	____	____
	Pipe wrench	____	____
	Wheelbarrow	____	____
	Adjustable wrench	____	____
	Screwdriver	____	____
	Trowel	____	____

Total Estimated Cost ____

General Construction Steps

Follow the construction steps below. Refer to the diagrams noted during the construction process.

1. Locate the spring site and with measuring tape, cord and wooden stakes, or pointed sticks, mark out the construction area as shown in Figure 3.

2. Dig out and clean the area around the spring to ensure a good flow. If the spring flows from a hillside, dig into the hill far enough to determine the origin of the spring flow. Where water is flowing from more than one opening, dig back far enough to ensure that all the water flows into the collecting area. If the flow cannot be channeled to the collection area because openings are too separated, drains will have to be installed. Information on the installation of drains appears in the section on the development of seep collection systems.

Flow from several sources may be diverted to one opening by digging far enough back into the hill. When digging out around the spring, watch to see if flow from the major openings increases or if flow from minor seeps stops. These signs indicate that the spring flow is becoming centralized and that most of the water can be collected

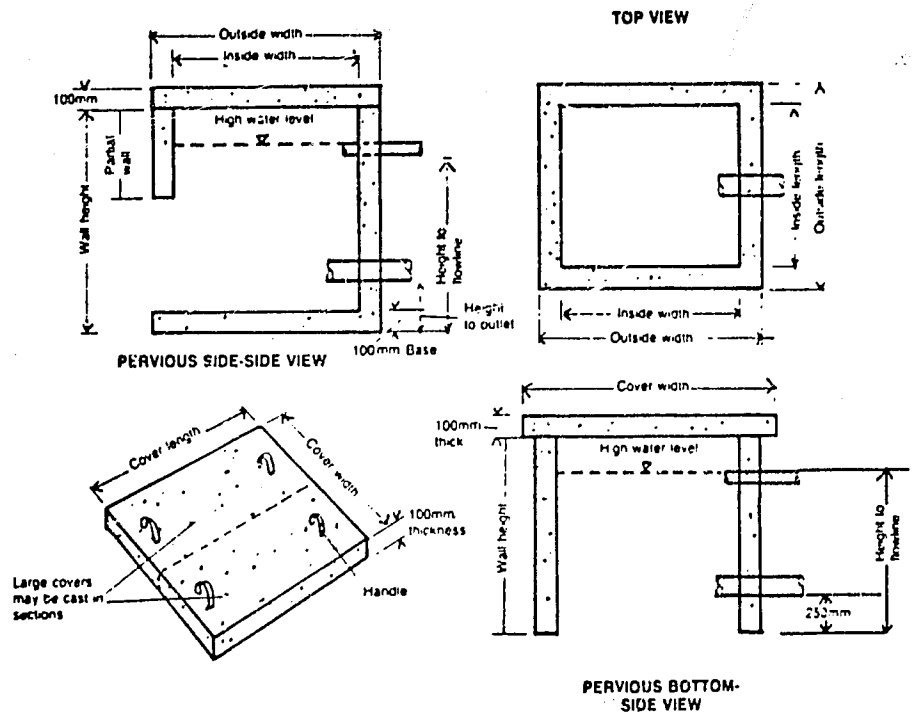

Figure 2. Spring Box Design

from one point. The goal is to collect all available water from the spring. It is generally easier to collect water from one opening than from several.

Dig down deep enough to reach an impervious layer. An impervious layer makes a good foundation for the spring box, and provides a better surface for a seal against underflow. If an impervious layer cannot be reached, attempt to construct the box in the most impermeable soil you can find.

3. Pile loose stones and gravel against the spring before putting in the spring box. The stones serve as a foundation for the spring box and help support the ground near the spring opening to prevent dirt from washing away. They also provide some sedimentation. For fast flowing springs, large stones with gravel between them should be placed around the spring to prepare a good solid base. Figure 4 shows an example of gravel and stone placed between the spring box and the spring.

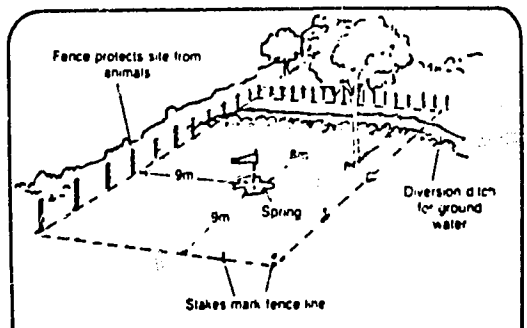

Figure 3. Preparation of Spring Box Site

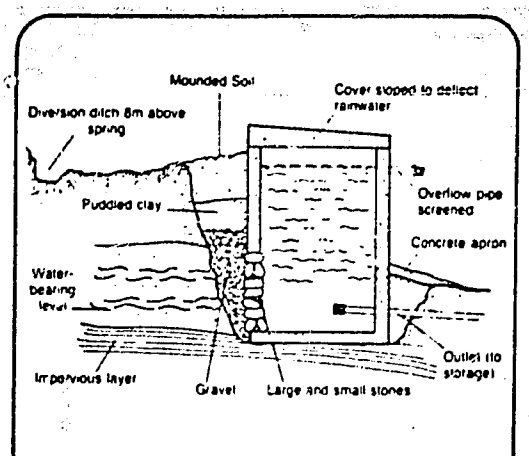

Figure 4. Spring Box with Open Side

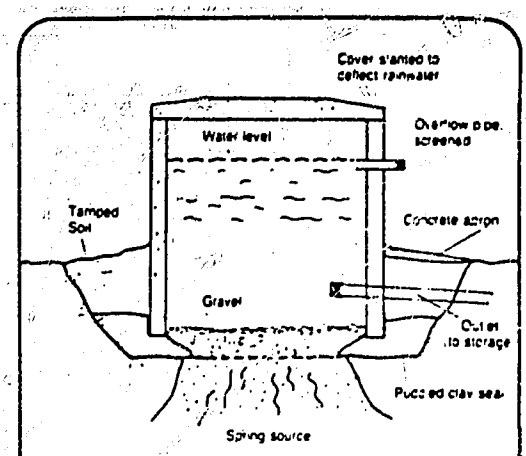

Figure 5. Spring Box with Open Bottom

If a spring flows from a single opening on level ground, dig out around the opening to form a basin. Be sure to dig down to impervious material to form the base. Line the basin with gravel so that the water flows through it before it enters the spring box. This is shown in Figure 5.

4. Approximately 8m above the spring site dig a trench for diverting surface run-off. The trench must be large enough to catch surface flows from heavy rains. If large stones are available in the construction area, use them to line the diversion trench to increase the rate of run-off and prevent erosion.

5. Mark off an area about 9m by 9m for a fence. Place the fence posts 1m apart and string the fence. A fence is useful to prevent animals from frequenting the spring site.

Concrete Construction Steps

In order to have a strong structure, concrete must cure at least seven days. Strength increases with curing time. Therefore, construction of the spring box should begin at the site during the first day of work. If the concrete is poured on the first day, seven days will be available for site preparation before the spring box is put in place. Be sure that all tools and materials needed to build the forms and mix the concrete are at the construction site.

1. Build wooden forms. Cut wood to the appropriate sizes and set up the forms on a level surface. The outside dimensions of the forms should be 0.1m larger than the inside dimensions. A form with an open bottom should be built for a spring flowing from one spot on level ground. For springs from hillsides, a spring box form with a partially open back must be constructed as shown in Figures 6 and 7. The size of the opening depends on the area which must be covered to collect the water. When building forms for a box with a bottom, be sure to set the inside forms 0.1m above the bottom for the floor. This is done by nailing the inside form to the outside form so that it hangs 0.1m above the floor. Make holes in the forms for the outflow and overflow pipes. Place small pieces of pipe in them so that correctly sized holes are left in the spring box as the concrete sets. A form for the spring box cover must also be built. Build all forms at the site.

Forms must be well secured and braced before pouring the concrete. Cement is heavy and the forms will separate if the bracing is not strong enough. One useful method is to tie the braces together with wire as shown in Figures 6 and 7. Drill holes in the forms and place wire through them. Using a stick, as shown, twist the wire to tighten it and force the forms together.

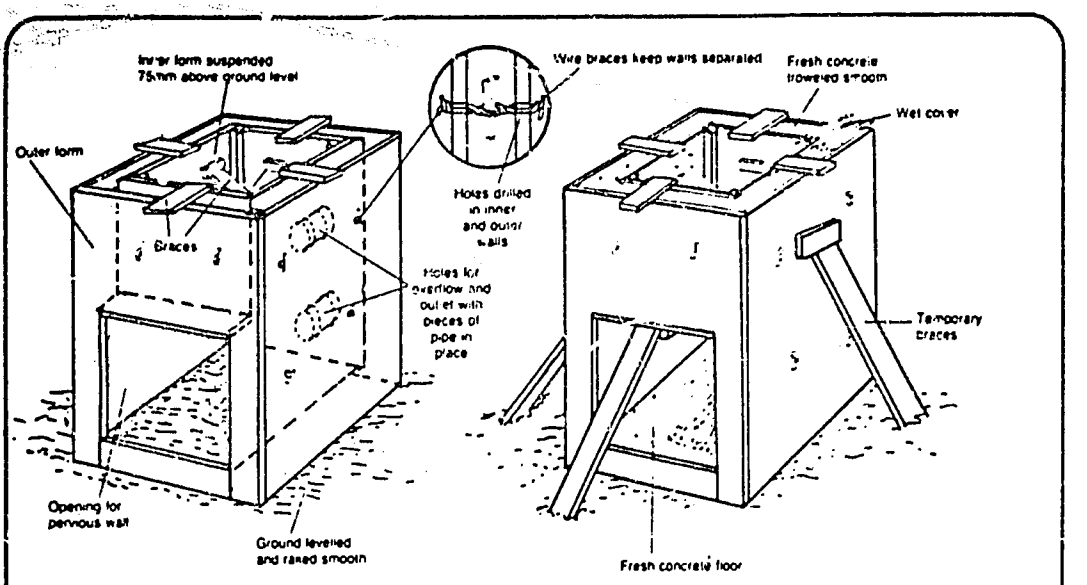

Figure 6. Forms for Spring Box with Open Side

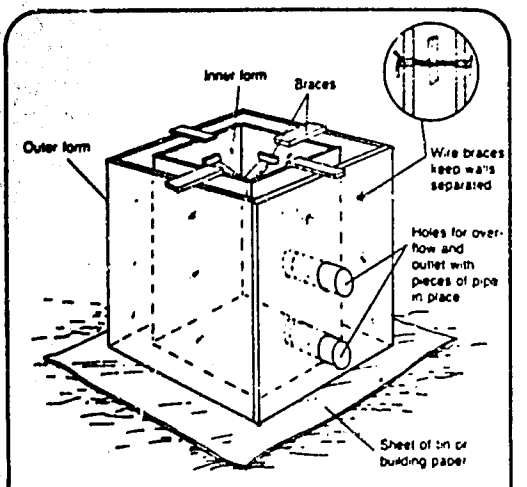

Figure 7. Forms for Spring Box with Open Bottom

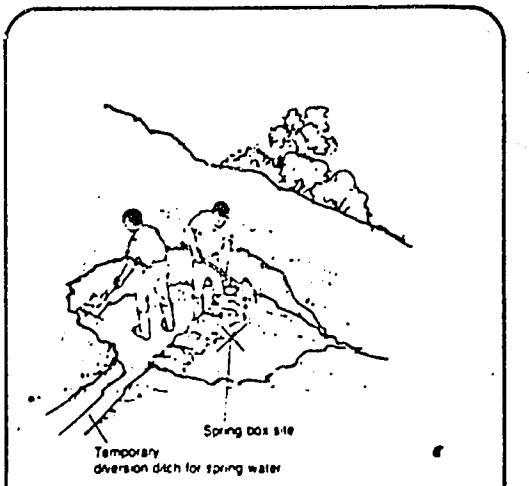

Figure 8. Excavating Spring Site

2. Set the forms in place. They should be either at the permanent site of the spring box or nearby so it will not be difficult to move the completed structure. If the forms are set and concrete is poured at the permanent site, water must be diverted from the area. This usually can be done easily by digging a small diversion ditch, as shown in Figure 8. Make sure that no water reaches the forms so that the concrete can cure.

If water diversion is difficult, build the forms and pour concrete on a level spot very near the spring. Once the concrete dries, remove the forms and set the completed structure in place. This will require six to eight people.

3. Oil the forms. Put old motor oil on the wooden forms so the concrete will not stick to them.

4. Prepare the reinforcing rods in a grid pattern for placement in the forms for the spring box cover. Make sure there is 0.15m between the parallel bars and that the rods are securely tied together with wire. Then position the reinforcing rods in the form. See Figure 9 for an example of reinforcing rod placement in the spring box cover. Major reinforcing is not needed for the spring box walls but some minor reinforcing around the perimeter of the walls is good to prevent small cracks in the cement. Four bars tied together to form a square should be placed in the forms.

5. Mix the concrete in a proportion of one part cement, two parts sand and three parts gravel (1:2:3). Add just enough water to form a thick paste. Too much water produces weak concrete. In order to save cement, a mixture of 1:2:4 can be used. This mixture is effective with high quality gravel.

6. Pour the concrete into the forms. Tamp the concrete to be sure that the forms are filled completely and that there are no voids or air pockets that can weaken it. Smooth all surfaces. Smooth the concrete for the spring box cover so the middle is a little higher than the sides (convex shape), as shown in Figure 10. This will allow water to run off the cover away from the spring box.

7. Cover the concrete with canvas, burlap, empty cement bags, plastic, straw or some other protective material to prevent it from losing moisture. The covering should be kept wet so water from the concrete is not absorbed. If concrete becomes dry, it no longer hardens, its strength is lost, and it begins to crack. Keep the cover on for seven days or as long as the concrete is curing.

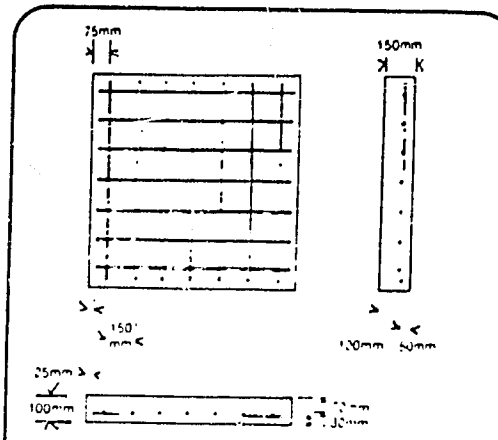

Figure 9. Placement of Rebar in Concrete Slab

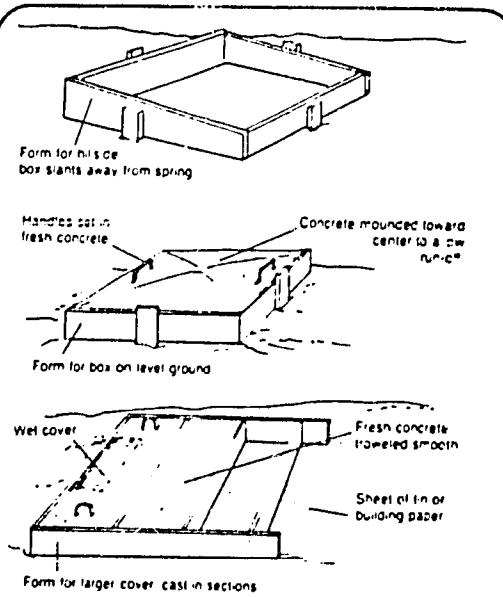

Figure 10. Forms for Spring Box Cover

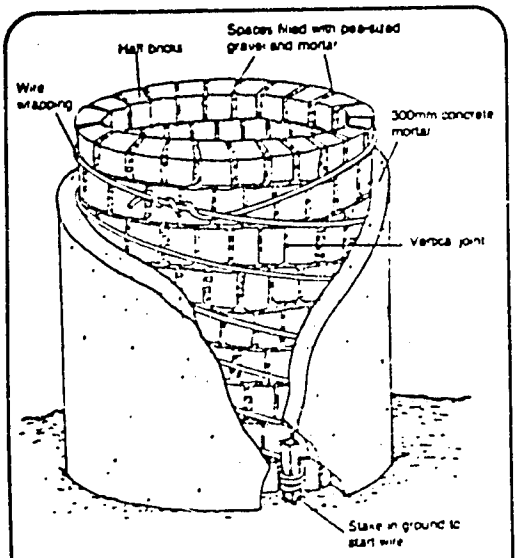

Figure 11. Brick Spring Box

8. Let the concrete structures set for seven days, wetting the concrete at least daily. After seven days, the forms can be removed and the box can be installed.

When constructing a masonry ring to protect a spring, follow the construction steps listed below.

1. Mark out a circle on the ground the diameter of the proposed masonry ring.

2. Using half bricks, place a circle of brick around the outside of the ring. Whole bricks broken in half or broken bricks can be used for the structure. In some places, broken bricks are available free.

3. Fill the spaces between the bricks with pea gravel and mortar mixed in a proportion of 1 part cement to 3 parts sand. As mortar is applied, add the next line of bricks. Be sure the vertical joints do not line up.

4. When reaching the desired height, strengthen the structure using baling, barbed or any available wire. Put a stake in the ground next to the ring and attach the wire to it. Wrap the wire around the ring several times as shown in Figure 11. Once the wire is wrapped around, secure and cut it.

5. Mix mortar in the proportion of 1 part cement to 3 parts sand. Cover the outside of the ring with a layer of mortar. The layer should be thick enough to cover the wire completely.

6. A circular cover should be built. Follow the same techniques as for the construction of concrete spring box covers.

Installing a Spring Box

The spring box must be installed correctly to ensure that it fits on a solid, impervious base and that a seal with the ground is created to prevent water seeping under the structure.

1. Place the spring box in position to collect the flow from the spring. If the flow comes from a hillside, the back of the spring box will be open. Stones should be placed at the back of the box to provide support for the structure and to allow water to enter the spring box. Figure 4 shows the placement of open-jointed rock in a completely installed spring box on a hillside. On level ground, be sure that the spring box has a solid foundation of impervious material. Place gravel around the box or in the basin so that water flows through it before entering the box.

2. Seal the area where the spring box makes contact with the ground. Use concrete or puddled clay to form a seal that prevents water from seeping under the box.

3. Be sure that the area where the spring flows from the ground is well lined with gravel, then backfill the dug out area with gravel. The gravel fill should reach as high as the inlet opening in the spring box so that the water flowing into the structure passes though gravel. In Figure 4, the gravel layer reaches the same level as the open stone wall. For spring boxes on level ground, gravel backfill is unnecessary.

4. Place the pipes in the spring box. Remove the pipe pieces used to

form the holes and put in the pipe needed for outflow and overflow. On both sides of the wall, use concrete to seal around the pipes so water does not leak out from around them. Place screening over the pipe openings and secure it with wire.

5. Disinfect the inside of the spring box with a chlorine solution. Before the spring box is closed, wash its walls with chlorine. Follow the directions for disinfection in "Disinfecting Wells," RWS.2.C.9.

6. Place the cover on the spring box.

7. Backfill around the area with puddled clay and soil. On a hillside, place layers of puddled clay over the gravel so that they slope away from the spring box. The clay layer should nearly reach the top of the spring box and should be tamped down firmly to make the ground as impervious as possible. If only soil were used for backfill, it would have to be as least 1.5-2m deep so that contaminated water could not reach the gravel layer. For springs on level ground, clay should be placed around the box. The clay foundation should slope away from the spring box so that water runs away from the spring outlet.

8. Backfill the remaining areas with soil to complete the installation.

Constructing Seep Collection System

Sometimes springs flow from many openings over a large area. To collect the water, a system of collectors made of perforated pipe, an anti-seepage wall, and a spring box must be built.

The collectors must extend on both sides of the spring box and anti-seepage wall. Figure 12 shows an example. To install collectors dig trenches into the water-bearing soil until an impervious layer is reached. In this way, water is taken from the deepest part of the aquifer and most of the available water can be collected. The trenches should extend the necessary length for collecting all available water and should be about 1m wide.

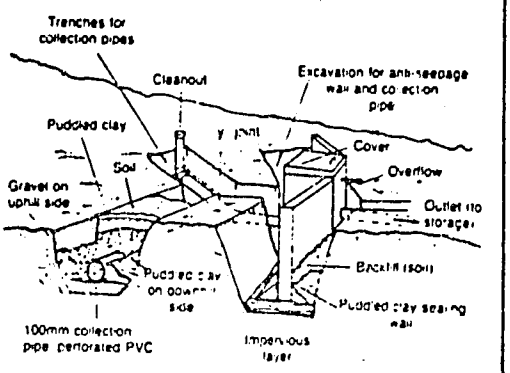

Figure 12. Seep Collection System

Lay 50-100mm diameter plastic perforated pipe or 100mm clay pipe in the trenches. Perforations in the plastic pipe should be about 3mm in diameter. On the uphill side of the trench, place enough gravel to cover the pipe. On the downhill side, build up a small clay wall to support the pipe. The pipe should have a 1 percent slope (0.01m slope per 1m distance) toward the point of collection. Flexible plastic tubing with slots already formed should be used if available. It is light and can be cut with a handsaw.

Clean-out pipes should be installed in the collection system. Attach lengths of pipe to the ends of the collection pipes. At the end of the clean-out pipes, place an elbow joint to which a vertical length of pipe is connected as shown in Figure 12. The pipe extends above ground level and is capped.

The next step is to build a concrete or impervious clay cutoff or anti-seepage wall. Dig down to an impervious layer for a good foundation. Make the forms for the cutoff wall 0.15m thick. Figure 13 shows a concrete cutoff wall 1.2m long and 0.9m high. Follow the same procedures for constructing the cutoff wall as for the spring box. There must be a good seal between the wall and the ground so that no water seeps underneath. Water must be

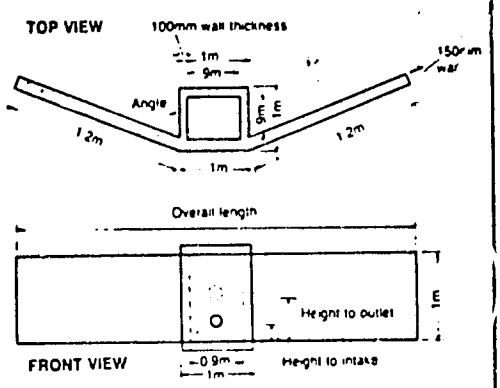

Figure 13. Anti-Seepage Wall and Collection Box

directed into the trenches and collectors. A small spring box can be built at the inside angle of the winged-wall with the wall forming two sides. If a spring box is built, the forms must be set at the same time as the cutoff wall. Water must be diverted from the construction area by small ditches for the seven days needed for the concrete to dry. Forms must be well braced and have holes for the inflow and outflow pipes as shown in Figure 14. Always pour the seep collection wall and spring box in place. The structure will be much too heavy to move after casting.

When using clay, be sure to remove any debris from the site and tamp the clay well so that the small dam or wall does not let water seep through. The clay walls should be built like walls of a dam with a 2:1 or 3:1 slope. Put

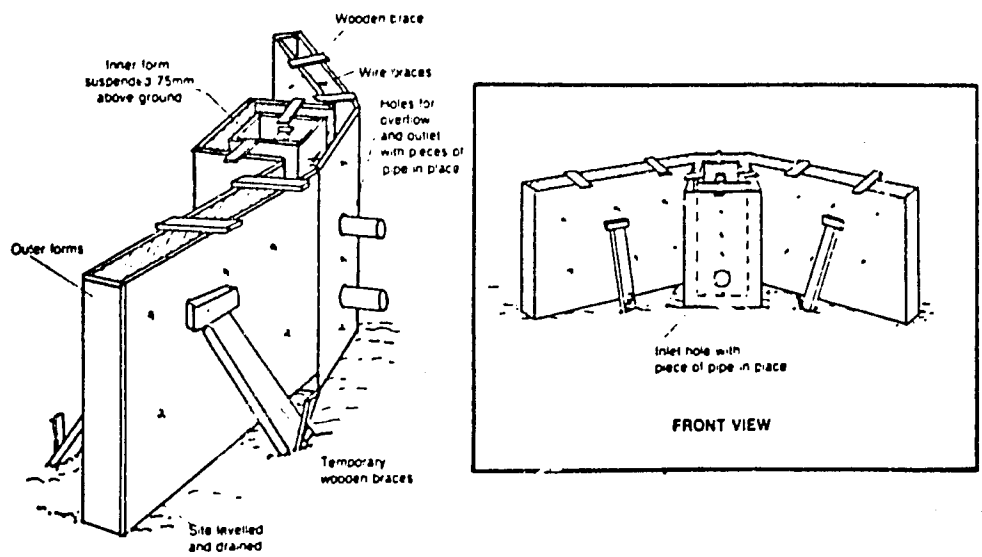

Figure 14. Forms for Anti-Seepage Wall and Collection Box

the clay down in layers 150mm thick and tamp each layer down well to ensure good compaction. Keep the clay moist. Lay and tamp each 150mm layer until the maximum height is reached. The walls should be well bonded to the spring box.

The construction of a seep collection system is more difficult and expensive than a simple spring box. Installation of collectors requires more work and some experience. Once the collectors are installed, however, the construction of the seep cutoff wall is no different from spring box construction. The same steps must be followed, the same mixture of concrete used and the same general rules for curing concrete and for placement must be followed.

Water for the World

Constructing Structures for Springs

Technical Note No. RWS. 1.C.1

There are two important reasons to build structures for springs and seeps. First, they protect the water from contamination caused by surface run-off and by contact with people or animals. Secondly, the structures provide a point of collection and storage for water. Water from springs and seeps is stored so it will be readily available to the users. This technical note discusses the construction of spring boxes and seep collection systems and outlines the construction steps to follow. The steps are basic to small construction projects and should be followed for the construction of most spring structures.

Useful Definitions

CONVEX - Curving outward like the surface of a sphere.

DISINFECTION - The process of destroying harmful bacteria.

EFFLUENCE - An opening from which water flows.

PUDDLED CLAY - A mixture of clay and a little bit of water used to make something watertight.

UNDERFLOW - Flow of water under a structure.

VOIDS - Open spaces in a material.

Materials Needed

Before construction begins, the project designer should give you the following items:

(1). A map of the area, including the location of the spring; locations of users' houses; and distances from the spring to the users, elevations,

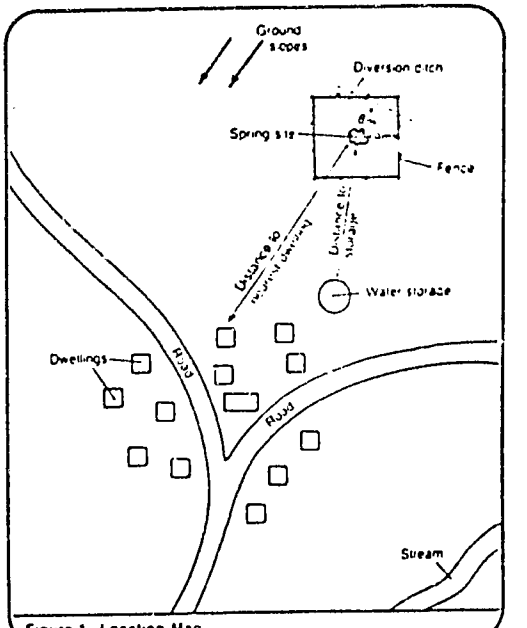

Figure 1. Location Map

and important landmarks. Figure 1 is a map of a small village with a spring located on high ground above it. Use your map to locate the construction site for the spring box.

(2) A list of all labor, materials and tools needed as shown in Table 1. Ensure that all needed materials are available and at the work site before work begins. Make sure that adequate quantities of materials are available to prevent construction delays.

(3) A plan of the spring box with all dimensions as shown in Figure 2. This plan shows a top, side, and front view, and the dimensions of a cover for a spring box 1m x 1m x 1m.

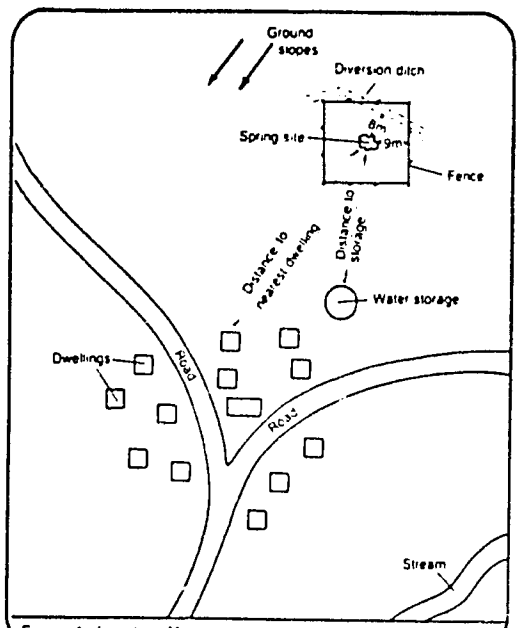

Figure 1. Location Map

Spring Box Design

There are several possible designs for spring boxes but, generally their basic features are similar. Spring boxes serve as collectors for spring water. They are sometimes used as storage tanks when a small number of people are being served and the source is located near the users. When larger numbers of people are served, the water collected in the spring box flows to larger storage tanks. The two basic types of spring boxes discussed in this paper are a box with one pervious side for collection of water from a hillside, and a box with a pervious bottom for collection of spring water flowing from a single opening on level ground. To determine which design to use dig out around the area until an impervious layer is reached, locate the source of the spring flow, and design to fit the situation.

Table 1. Sample Materials List

Item	Description	Quantity	Estimated Cost
Labor	Foreman	___	___
	Laborers	___	___
Supplies	Portland cement	___	___
	Clean sand and gravel, if available, or locally available sand and gravel	___	___
	Water enough to make a stiff mixture.	___	___
	Wire mesh or reinforcing rods	___	___
	Galvanized steel or plastic pipe (for outlets, overflow, and collectors)	___	___
	Screening (for pipes)	___	___
	Boards and plywood (for building forms)	___	___
	Old motor oil, or other lubricant (for oiling forms)	___	___
	Baling wire	___	___
	Nails	___	___
Tools	Shovels and picks (or other digging tools)	___	___
	Measuring tape or rods	___	___
	Hammer	___	___
	Saw	___	___
	Buckets	___	___
	Carpenter's square or equivalent (to make square edges)	___	___
	Mixing tub (for mixing concrete.	___	___
	Crowbar	___	___
	Pliers	___	___
	Pipe wrench	___	___
	Wheelbarrow	___	___
	Adjustable wrench	___	___
	Screwdriver	___	___
	Trowel	___	___

Total Estimated Cost ___

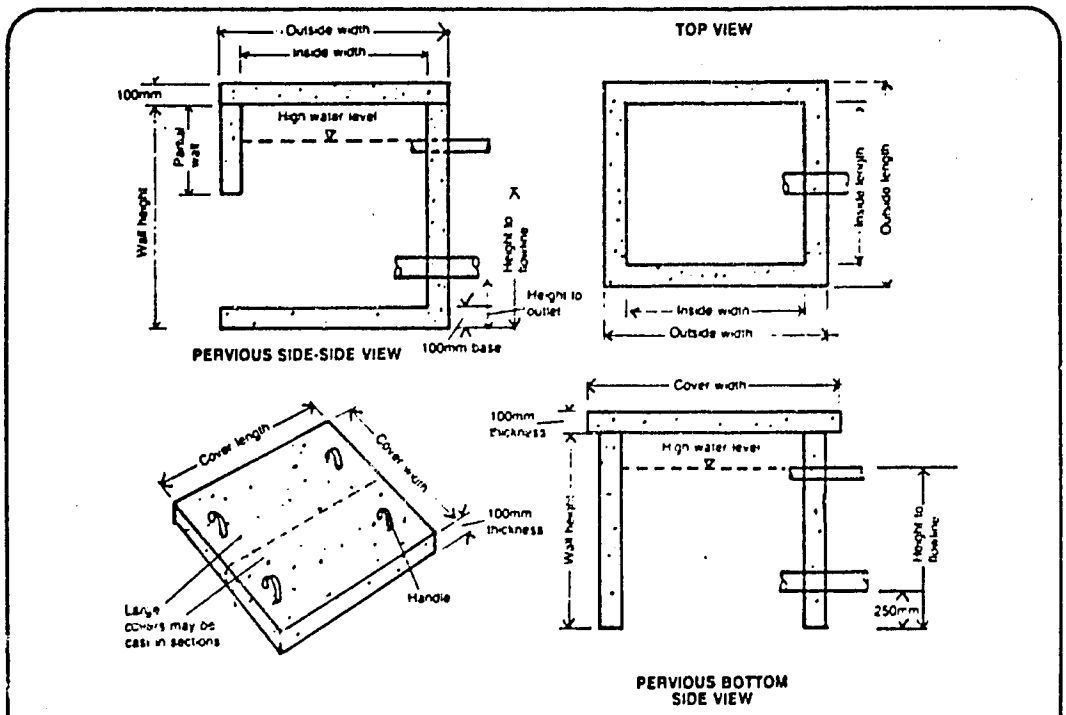

Figure 2. Spring Box Design

Spring Box with Open Side. A spring box with a pervious side is needed to protect springs flowing from hillsides. The area around the spring must be dug out so that all available flow is captured and channeled into the spring box.

After this has been done, a collection box can be built around the spring outlet as shown in Figure 3. The dug-out area should be lined with gravel. The gravel placed against the spring opening serves as a foundation for the box and prevents the spring water from washing soil away from the area. The gravel pack also filters suspended solids. The gravel-filled area should be between 0.5-1m wide depending on the size of the spring collection area. To ensure that no contamination reaches the water, the gravel pack should be at least 1m below the ground surface. This is done either by locating the spring catchment in the hillside or by raising the ground level with backfill.

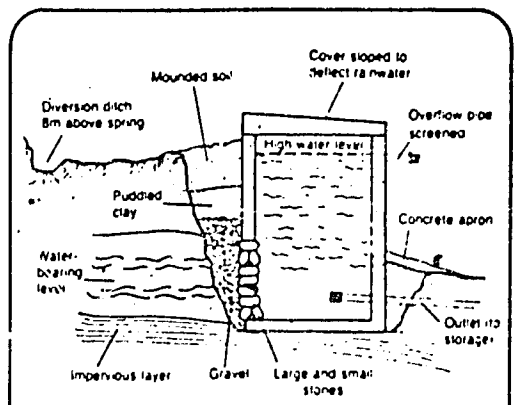

Figure 3. Spring Box with Open Side

Caution must be taken not to disturb ground formations when digging out around the spring. Without care, the flow of the spring may be deflected in another direction or into another fissure. The area must, however, be dug out enough so that the spring box fits into impermeable material. In cases where the box does not reach impermeable material, puddled clay should be used to seal the area around the sides of the spring box.

Spring Box with Open Bottom. If a spring flows through a fissure and emerges at one point on level ground, a spring box with an open bottom can be developed as shown in Figure 4. The area around the spring is dug out until an impermeable layer is reached. The area around the spring is then leveled and lined with gravel. The spring box is placed over the spring and gravel to collect the flow, and clay or concrete is packed around the box to prevent seepage between the ground and the box. Sometimes a small sump can be built at the bottom so that sediment settles in one place.

The design of both types of spring boxes is basically the same and includes the following features:

(a) a water-tight collection box constructed of concrete, brick, clay pipe or other material,
(b) a heavy removable cover that prevents contamination and provides access for cleaning,
(c) an overflow pipe, and
(d) a connection to a storage tank or directly to a distribution system.

The spring box with an open bottom is simpler and cheaper to construct. Generally, on level ground, flow from only one source must be captured and collection of all available flow is much easier. Costs are lower because less digging and fewer materials are required.

The spring box should be constructed at the spring site for easy installation. If the appropriate materials are available, the spring box should be made of concrete. Information on the use of concrete is included in Worksheet A. Three sides of the spring box must be impervious and depending on the type of spring selected for development, either the bottom or the

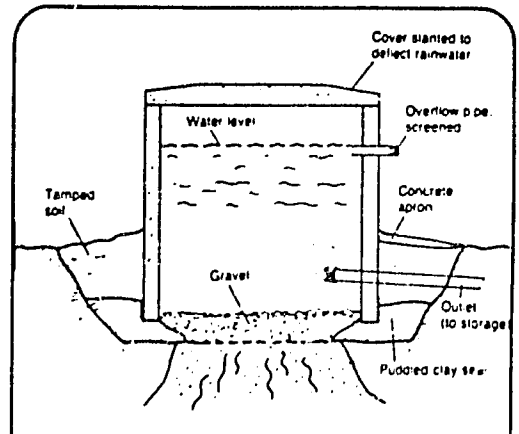

Figure 4. Spring Box with Open Bottom

upslope side must be pervious or open. The upslope side of an open sided spring box can be constructed partially with concrete and partially with large rocks and gravel as shown in Figure 3. Large rocks support the spring box and allow water to enter. Smaller stones should be used between the large rocks to close large openings so that sediment is filtered from the water.

If materials for building a concrete box are not available, or are expensive, there are alternatives that are particularly useful in developing a single source spring. Large prefabricated clay or concrete tubes, like regular spring boxes, can be placed around the spring. Water rises in the tube and flows out the outflow pipe. Rings for collecting spring water can even be constructed using bricks and mortar. Half or broken bricks can be used to build a ring as shown in Figure 5. The bricks are laid in a circular pattern, so that vertical joints do not line up. Spaces between the bricks are filled with gravel and mortar. Bricks are laid until a height of between 0.9-1.2m is reached. The diameter may vary but should be around 0.7-1.0m. An outlet and overflow pipe should be placed in the structure before installation and with reinforcement added. This type of structure is very practical and inexpensive to construct. Little cement is needed and locally available materials can be used.

Worksheet A. Calculating Quantities Needed for Concrete
(Calculations for a box 1m × 1m × 1.0m with open bottom)

Total volume of box = length (l) x width (w) x height (h)

Thickness of walls = 0.10m

1. Volume of top = l 1.2 m x w 1.2 m x t 0.10 m = 0.144 m^3
2. Volume of bottom = l 0 m x w 0 m x t 0 m = 0 m^2
3. Volume of two sides = l 1 m x w 1 m x t 0.10 m x 2 = 0.20 m^3
4. Volume of two ends = l 1 m x w 1 m x t 0.10 m x 2 = 0.20 m^3
5. Total volume = sum of steps 1, 2, 3, 4, 5 = 0.54 m^3
6. Unmixed volume of materials = total volume x 1.5; 0.54 m^3 x 1.5 = 0.81 m^3
7. Volume of each material (cement, sand, gravel, 1:2:3):

   cement: 0.167 x volume from Line 6 0.81 = 0.13 m^3 cement.
   sand: 0.33 x volume from Line 6 0.81 = 0.26 m^3 sand.
   gravel: 0.50 x volume from Line 6 0.81 = 0.4 m^3 gravel.

8. Number of 50kg bags of cement = $\frac{\text{volume of cement}}{\text{volume per bag}}$

   volume of cement 0.13m^3 ÷ .033m^3/bag = 4 bags.

9. Volume of water = 28 liters x 4 bags of cement = 112 liters.

(NOTE: 1) Do not determine volume for an open side or bottom.
2) The top slab has a 0.1m overhang on each side.
3) The same calculations will be used to determine the quantity of materials for construction of a seepage wall.
4) To save cement a 1:2:4 mixture can be used.)

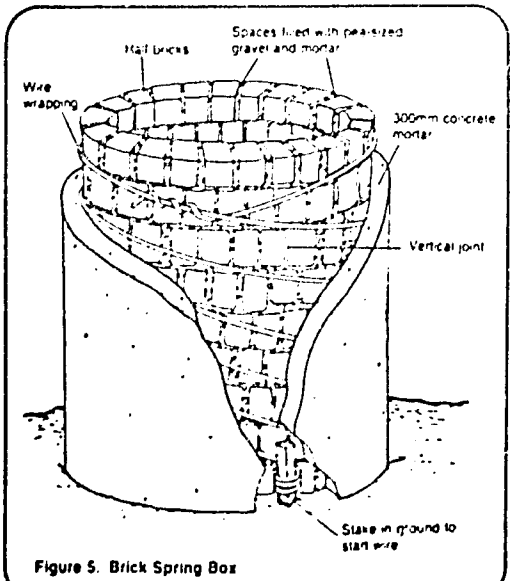

Figure 5. Brick Spring Box

The capacity of the spring box depends on whether it is being used for storage or pre-storage. If the spring box is used for storage, it should be large enough to hold a volume of water equal to the needs of the users over a 12-hour period. For example: If 100 people each use 25 liters of water per day, the amount of water consumed in 12 hours is 1250 liters. There are 1000 liters per m^3. Therefore the volume of the spring box should be 1.25m^3. (Volume = length x width x height). If the collection box is used only for pre-storage and water flows on to another storage tank, the collection box can be smaller.

A reinforced concrete cover must be constructed to protect the tank from outside contamination. The cover should be cast in place to ensure proper fit. It should extend over the spring box about 0.1m on each side so rain does not fall at the base of the spring box. The cover should be heavy enough so children cannot lift it off.

The spring box should have an overflow pipe. The pipe is placed a little below the maximum water level and at least 0.15m above the floor of the tank. If the pipe is above the maximum water level, water will not flow out and pressure is created in the tank. The pressure could cause a back-up and diversion of the spring. The overflow pipe should be covered with a screen fine enough to keep out mosquitoes and strong enough to keep out small animals. The size of the pipe depends on the flow of the spring. A rock drain or concrete slab should be placed outside the tank below the overflow pipe to prevent erosion near the base and to carry the water away from the spring. A pipe which extends 3-5m from the tank is desirable in order to keep the site free from still water.

An outlet pipe for connection to a distribution system should be located at least 0.1m above the bottom of the spring box to prevent a blockage due to sediment build-up. The pipe size depends on the grade to the storage tank and the spring flow. A general rule to follow is that at a one percent grade, a 30mm pipe should be used. A grade between 0.5 and one percent requires a 40mm pipe, while a 50mm pipe should be used for grades of less than 0.5 percent. In some cases the same pipe will be both outlet and overflow. The outlet pipe should slope downward for best flow.

After the spring box is installed, the space behind it must be filled with soil and gravel. The gravel is the bottom layer. On top of it, a water-tight layer should be formed to prevent the entrance of surface water. This can be done with concrete or puddled clay. Puddled clay is a mixture of clay and water formed into a layer 150mm thick. The layer is placed on the ground and worked in by trampling on it. Several layers of puddled clay should be placed behind the box.

After sealing the area, the box can either be completely covered with soil or stand above the ground surface. The box should be at least 0.30m above ground level so that run-off does not enter it. For further sanitary protection, a ditch should be dug at least 8m above the spring box to take surface water away from the area. The soil from the ditch should be piled on the downhill side to make a ridge and help keep surface water away. A fence around the area will keep animals from getting near the spring box and help prevent contamination and destruction of the area. The fence should have a radius of between 7-8m.

Seep Design

Designs for seep development are similar to those for spring boxes. Figure 6 shows the basic design. Intakes (collectors) are very important features of seep development. The collector system consists of small channels containing 100mm clay open-joint or 50mm plastic perforated pipe packed in gravel. The collectors are installed in the deepest part of the aquifer. They take advantage of the saturated ground above them for storage during times when the groundwater table is low. The perforations in the pipes must be about 5mm in diameter or large enough to collect sufficient water but small enough to prevent suspended matter from entering the pipes. In fine and medium-sized sand, perforated pipe should be packed in gravel but suspended material often will enter the pipe in spite of the gravel.

To prevent clogging, the collectors should be sized so that the velocity of water flow in them is between 0.5m per second and 1m per second. See "Methods of Delivering Water," RWS.4.M.

Water collected by the pipes is channeled to the spring box through a gravel pack. The collectors must extend across the entire width and length of the water-bearing zone and should be perpendicular to the flow of the aquifer. These intakes should extend below the water-bearing zones to collect the maximum amount of water and permit free flow into the collector. The advantage of a collector system is that water seeping over a large area can be channeled into a central storage basin.

Clean-out pipes to flush sediment from the collection pipes should be attached to the collection pipes. To install clean-out pipes, add a length of pipe to the far end of the collection pipe. At the end of this length, place an elbow joint facing upwards and attach a vertical length of pipe.

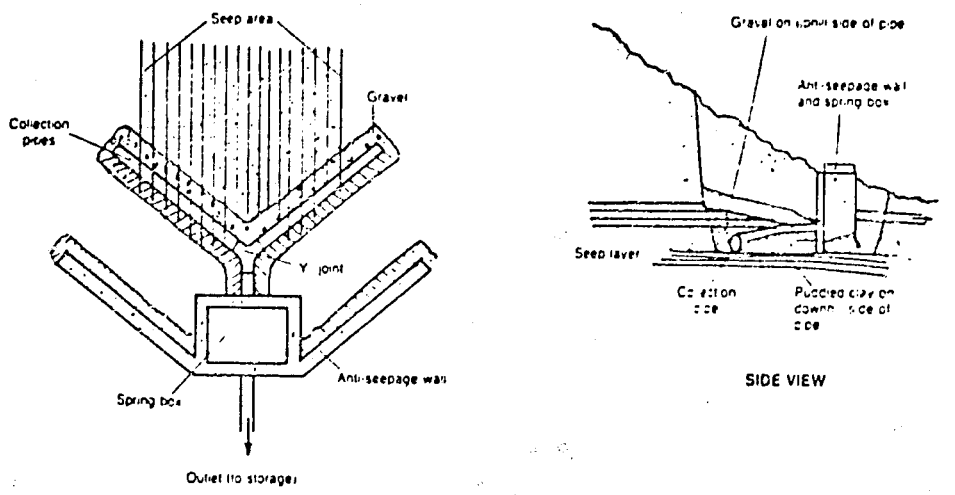

Figure 6. Seepage Collection System

The pipe should extend a little above the ground and be capped. If the collector system clogs, water can be added to the clean-out pipes to flush out the system.

For seep development, a cutoff wall of clay, concrete or other impervious material should be constructed. The cutoff is usually constructed as a large "V" pointing downhill with wing walls extending into the hill to prevent water from escaping. The cutoff should extend down into impervious material to force the flowing water to move to the collection point and to prevent loss of water due to underflow.

The use of concrete for the cutoff wall is best but most expensive. A wall 0.15m thick will ensure adequate strength against increased flow. The height of the cutoff wall depends on the size of the flow being collected. If desired, a spring box may be constructed inside the "V" shaped meeting of two walls as shown in Figure 7. The spring box will provide a settling basin for sediment removal and storage. The spring box should be designed so that water enters it

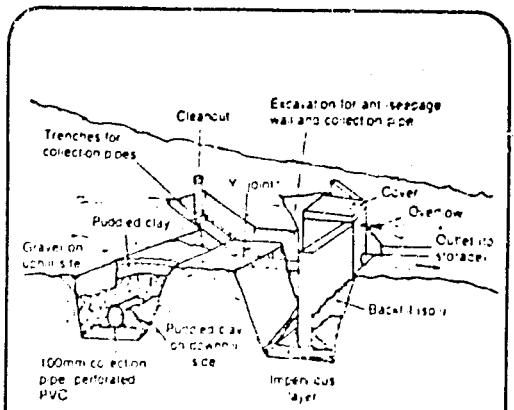

Figure 7. Basic Design Feature of a Seep Collection System

through openings in the upper wall. These openings must be screened to prevent entrance of debris.

Puddled clay instead of concrete can be used to form the cutoff wall. The clay is piled up and tamped down to form an impervious wall. It acts as a small dam which prevents spring water

from flowing away from the collection area. The clay cutoff wall works as well as the cement wall and is much cheaper and easier to install. Good impervious clay should be available if this type of cutoff wall is chosen.

An outlet pipe is installed to move water from the collection point to storage. The diameter of the pipe depends on the grade to storage and will generally range between 30-50mm. To determine the correct pipe size, see "Methods of Delivering Water," RWS.4.M. The outlet pipe for a spring box or simple collection wall should be at least 150mm from the bottom of the collection area. A watertight connection should be made where the pipe leaves the spring box or goes through the cutoff wall. As in the case of spring boxes, the outlet pipe must be screened with small mesh wire. Because of the cost, this type of structure should be used only where seeps cover an extensive area. Skilled laborers will be needed for construction.

Horizontal Well Design

Horizontal wells are very simple and can be quite inexpensive. In order to use a horizontal well, an aquifer must have a steep slope or hydraulic gradient. Steep hydraulic gradients generally are found in chilly, sloping land and follow the ground surface. Horizontal wells, shown in Figure 8, are installed in much the same manner as vertical driven and jetted wells. See "Designing Driven Wells," RWS.2.D.2, and "Designing Jetted Wells," RWS.2.D.3 for specific design features.

A horizontal well can be driven if the spring flows from an aquifer in permeable ground. A pipe with an open end or with perforated drive points is driven into the aquifer horizontally or at a shallow slope to tap it at a point higher than its normal discharge. In some soils, the pipe can be driven by hand. Generally the pipe is driven using machinery.

"Designing Driven Wells," RWS.2.D.2, outlines the steps in designing a driven well. These same steps should be followed in designing horizontal wells. One design difference is that extra care must be taken

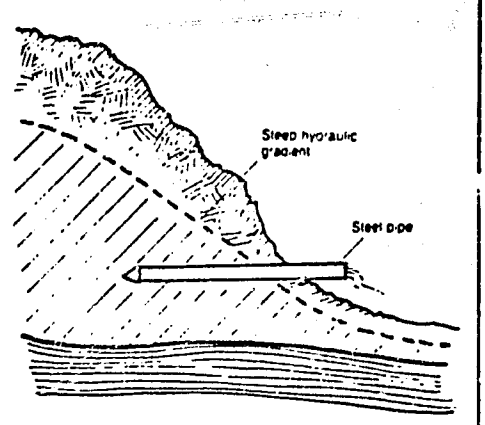

Figure 8. Horizontal Well

to avoid leakage between the driven pipe and the ground. If exterior flow occurs, it can be stopped by forcing clay or grout into the space, or by digging by hand 1m back along the pipe and installing a concrete cutoff wall. The wall should have a diameter of $0.6m^2$ and no more than 0.05m thick. After the concrete slab hardens, the dug-out area should be packed and backfilled with clay.

If the aquifer that feeds the spring is behind a rock layer, driving a horizontal well will be very difficult if not impossible. In this case, a jetted horizontal well will have to be installed. "Designing Jetted Wells," RWS.2.D.3, explains the process of jetting wells. The problem is that horizontal well drilling is different from vertical drilling, and may be too difficult for inexperienced people. Drilled horizontal wells should only be considered when there are no other reasonable alternatives.

Materials List

In addition to a location map and design drawings, give the person in charge of construction a materials list similar to Table 1 showing the number of laborers, types and quantities of materials needed to construct the spring protection. Some quantities will have to be determined in the field by the person in charge of construction.

Concrete. Concrete is the major material used in the construction of spring boxes and cutoff walls. Concrete is a mixture of Portland cement, clean sand, and gravel in a fixed proportion. The proportion generally used is one part cement, two parts sand, and three parts gravel (1:2:3). Water is used to mix the concrete. Twenty-eight liters of water should be used for each bag of cement. Worksheet A will help determine the amount of materials needed. Use the worksheet in making the following calculations.

1. Calculate the volume of mixed concrete needed (length x width x thickness; Worksheet A, Lines 1-5).

2. Multiply this number by 1.5 to get the total volume of dry loose material (cement, sand and gravel) needed (Worksheet A, Line 6).

3. Add the numbers in the proportion in order to find the fraction of the total needed for each material (1:2:3 = 6, so 1/6 of the mixture should be cement, 2/6 sand, and 3/6 gravel. In decimals, this is 0.167 cement, 0.33 sand, and 0.50 gravel).

4. Determine the amount of each material needed by multiplying the volume of dry mix from step 2 by the proportional amount for each material (1/6 x volume of dry mix = total amount of cement needed; Worksheet A, Line 7).

5. Divide the volume of cement needed by .033m^3 (33 liters), the amount of cement in a 50kg bag, to find the number of bags of cement required. When determining the amount of cement, figure to the largest whole number (Worksheet A, Line 8).

6. An extra quantity of cement should be figured into the total for use in grouting and sealing areas around the outlet pipes.

7. Calculate the amount of water needed to mix the concrete (28 liters of water per bag of cement; Worksheet A, Line 9).

8. Extra gravel will be needed for backfill of areas behind springs. Graded gravel is preferable, but local materials can be used if necessary. Calculate the volume of the area to be backfilled by taking length x width x height of area.

Reinforced Concrete. Concrete can be reinforced to give it extra strength. This is best done with wire mesh or specially made steel rods. Reinforced concrete sections must be at least 0.10cm thick. Reinforced concrete should be used for all spring box covers and for the walls of seep structures. If wire mesh is used, the quantity needed will be approximately equal to the area of the slab being constructed. If steel bars (rerod) are used, they should be placed in the wooden form before the concrete is poured. 10mm diameter rods should be used.

The reinforcing rod should be located as follows:

- So that the rods are at least 25mm (0.25m) from the form in all places;
- So that the rebar rests in the lower part of the cover; two-thirds the distance from the top or .70mm from the top of a 100mm slab;
- So that a 150mm (0.15m) space lies between a parallel rods in a grid pattern as shown in Figure 9.

Where the reinforcing rods cross, they should be tied together with wire at the point of intersection.

To determine the number of reinforcing bars, divide the total length or width of the spring box cover by 0.15m (distance between bars). For example, $\frac{1.2m}{0.15m}$ = 8 bars.

To determine the length of each bar, subtract 0.05m (0.025m each side) from the total length or width of the cover. For example, 1.2m - 0.05m = 1.15m.

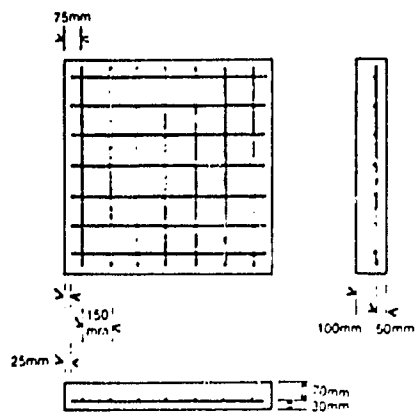

Figure 9. Placement of Rebar in Concrete Slab

Pipes. Outlet pipes can be of galvanized steel, or plastic depending on what is available. Galvanized steel is preferable because of its strength. Steel pipe lasts longer and does not shatter like plastic pipe. Intake pipes should be either clay, perforated plastic open-joint cement or in some cases, bamboo. The choice again will depend on availability of materials and cost. The pipe should have a minimum diameter of 50mm to be sure that an adequate supply of water enters the collection system. All pipes must be laid at a uniform grade to prevent air lock in the system.

When labor requirements, materials, and tools have been decided on, prepare a materials list similar to Table 1 and give it to the construction supervisor.

Important Considerations

Spring protection should ensure that the source is always protected from contamination. Before attempting to develop a spring, conduct a sanitary survey as described in "Conducting Sanitary Surveys to Determine Acceptable Surface Water Sources," RWS.1.P.2. Follow the guidelines for measuring the quantity of available water present in "Selecting a Source of Surface Water," RWS.1.P.3, to be sure that the source will meet community needs. The preliminary work described in these technical notes should be done before designing a protective structure.

The choice of the structure for spring protection depends on the geologic conditions of the area, the type of spring, the materials available, and the skill level of available labor. Spring boxes are easy to design and require little construction expertise, although workers should have some construction experience. Driven horizontal wells are also easy and inexpensive to develop although some expertise is needed to complete a successful well.

Structures for seeps are more difficult to design and require that workers have a much higher level of construction experience. The cost of developing a seep may be very high depending on the length of the retaining wall and the amount of pipe needed for intakes.

Water for the World

Maintaining Structures for Springs

Technical Note No. RWS. 1.0.1

Spring structures are easy to operate and maintain. One of the main advantages of springs as water sources is that they are inexpensive to develop. The structures needed to protect them require little attention after installation. No structure, however, is completely maintenance free. Even the most simply designed spring structure needs periodic maintenance to ensure that it provides good quality water in sufficient quantities. This technical note describes the periodic maintenance needed for spring boxes and seep collection systems so that they operate effectively for many years.

Useful Definitions

EROSION - The wearing away of soil, rock or other material by the flow of water.

PERVIOUS - Allowing liquid to pass through.

SEDIMENT - Small particles of dirt and other matter that settle to the bottom of water.

TURBIDITY - Cloudiness in water caused by particles of suspended matter.

Maintenance of Spring Boxes

The maintenance of spring boxes requires that a check be made to ensure that the structure adequately protects the water source and that all available water is being collected. Examine the spring box periodically to ensure that there is no silt build-up and that water quality is good. Study the following conditions at the site to ensure that the spring is well-protected and free from any operating problems.

Determine whether the diversion drainage ditch above the spring is doing an adequate job of removing surface water from the area. If not, the trench should be improved. The diversion ditch should be lined with gravel or stones to increase flow and to prevent erosion of the sides. Grass can be planted in the trench to prevent erosion, but heavy growth will block flow. Be sure to check the diversion ditch periodically to make sure that grass is not too high and that no other obstructions will block water flow.

If there is a fence above the spring, make sure it is in good repair and is effectively keeping animals away from the spring.

Check the upslope wall to be sure it is solid and erosion is not wearing it away. If there are signs of heavy erosion or settling, add additional backfill of top soil, clay or gravel. Build up the hill with stones and plant grass to help control erosion around the spring box.

Check the water. If there is an increase in turbidity or flow after a rainstorm, surface run-off is reaching the source and contaminating it. Identify the source of the run-off and improve the protection of the spring.

Take periodic samples of the water and have them analyzed to check for evidence of fecal contamination. Information on taking a water sample and analyzing it can be found in "Taking a Water Sample," RWS.3.P.2 and "Analyzing a Water Sample," RWS.3.P.3.

Check the cover to be sure the box is watertight. Make sure that the cover is not removed by the users and that contamination is not being introduced by people dipping buckets and other utensils into the spring box.

Determine that all available water is being collected by the system. Watch out for water seeping from the sides or from underneath the spring box. If water seeps out, seal the leak with clay or concrete so that all flow is diverted into the spring box.

Ensure that the system is cleaned adequately. Once a year disinfect the system and clean the sediment out of the spring box. To clean the system, remove the cover. Allow the water to drain from the spring box by opening the valve on the outlet pipe. If the box has only one pipe for outlet and overflow, use a bucket to empty the spring box as shown in Figure 1. Then use a small shovel to clean out the sediment collected on the bottom of the tank. Sediment removal will prevent clogging and build-up which causes the tank to fill up more quickly.

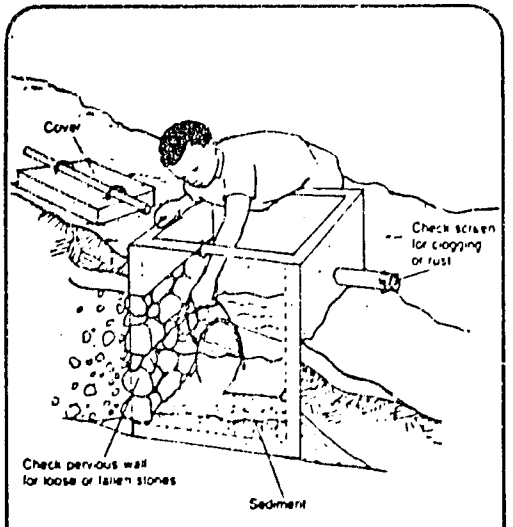

Figure 1. Emptying Spring Box

If a pump is built into the spring box to collect sediment, a drain pipe can be installed to carry sediment away. The drain pipe should have a valve. This type of installation is especially useful when tapping a fast flowing spring.

After cleaning the tank, follow the procedures for disinfection explained in "Disinfecting Wells," RWS.2.C.9. All walls of the spring box should be washed with a chlorine solution and chlorine should be put directly into the water. If possible, the chlorine should be allowed to stand for 24 hours. If the chlorine cannot stand that long, apply two doses of chlorine twelve hours apart to ensure complete disinfection. Figures 1, 2, and 3 show the cleaning and disinfection of a spring box.

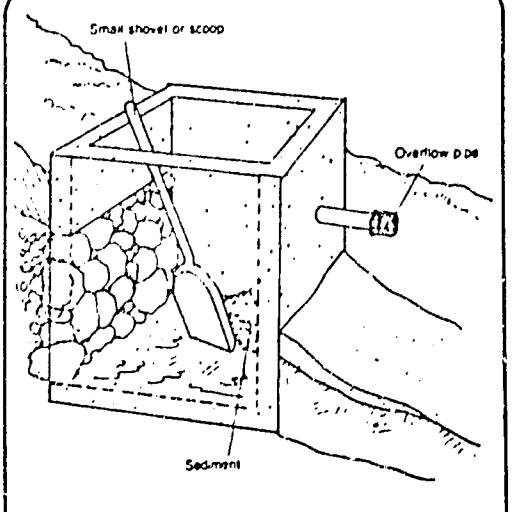

Figure 2. Removing Sediment

Check the screening on the pipes to see if cleaning is necessary. If screens are clogged or very dirty, they should be either cleaned or changed. Always use copper or plastic screening to prevent rust.

Maintenance of Seep Collection Systems

Operating and maintaining seep collection systems is similar to spring boxes except that extra care must be taken in the maintenance of the collection pipes. Although collection pipes are lined with gravel to filter out sediment, the pipes can still clog.

If clogging occurs, substantially less water will reach the collection box. If water flow decreases, suspect that the collection system is clogged.

To clean the clogged pipes, remove the cap from the clean-out pipe and pour water into it. Use either a hose or a bucket so that sufficient force is available to break up the sediment. See Figure 4.

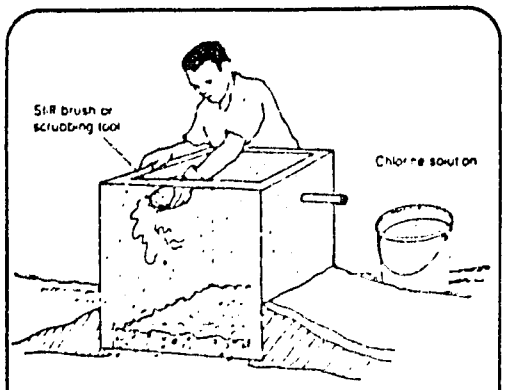

Figure 3. Scrubbing Walls with Chlorine Solution

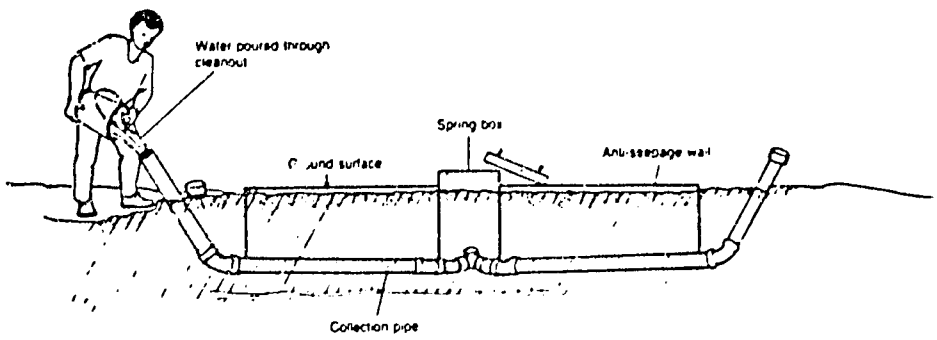

Figure 4. Flushing Out Seep Collection System

SPRING BOX SYSTEM

There are two important reasons to build structures for springs. First, they protect the water from contamination caused by surface runoff and by contact with people or animals. Secondly, the structures provide a point of collection and storage for water. Water from springs is stored so it will be readily available to the users. The following discusses the construction of spring boxes and outlines the construction steps to follow. The steps are basic to small construction projects and can be followed for the construction of most spring structures.

Materials Needed

Before construction begins, the project designer should give you the following items:

1. A map of the area, including the location of the spring; locations of users' houses; distances from the spring to the users; elevations; and important landmarks. Figure 1 is a map of a small village with a spring located on high ground above it. Use your map to locate the construction site for the spring box.

2. Ensure that all needed materials are available and at the work site before the work begins. Make sure that adequate quantities of materials are available to prevent construction delays.

3. A plan of the spring box with all dimensions is shown in Figure 2. This plan shows a top, side, and front view, and the dimensions of a cover for a spring box (1 m x 1 m x 1 m).

TAKEN FROM WATER FOR THE WORLD TECHNICAL NOTE - RWS 1.C.1 and 1.0.1.

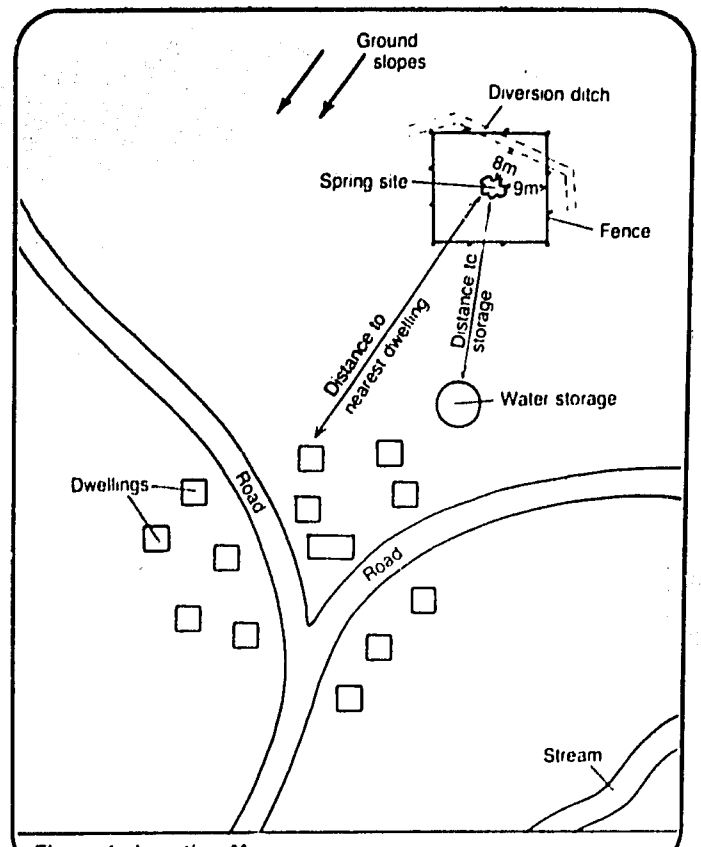

Figure 1. Location Map

Previous Page Blank

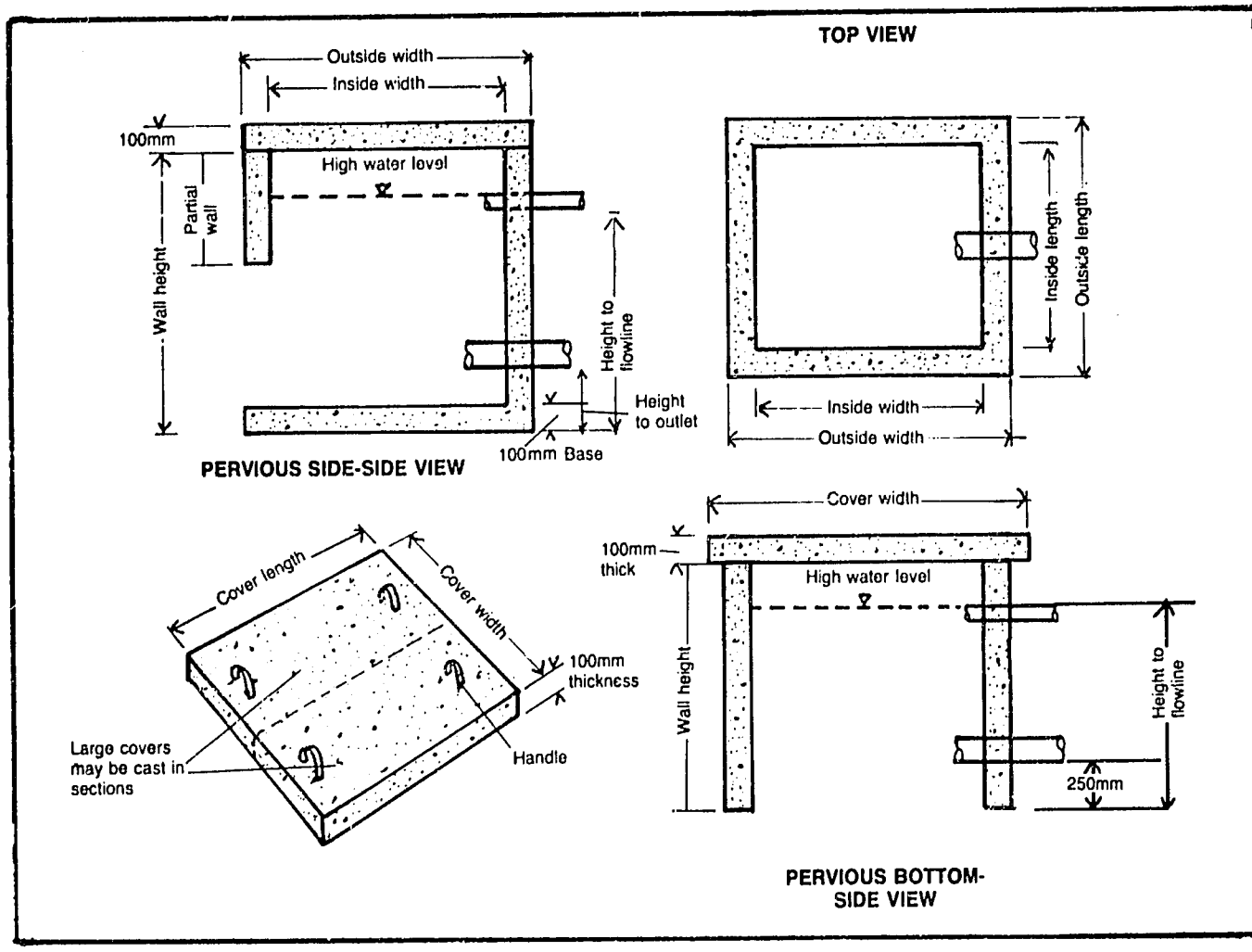

Figure 2. Spring Box Design

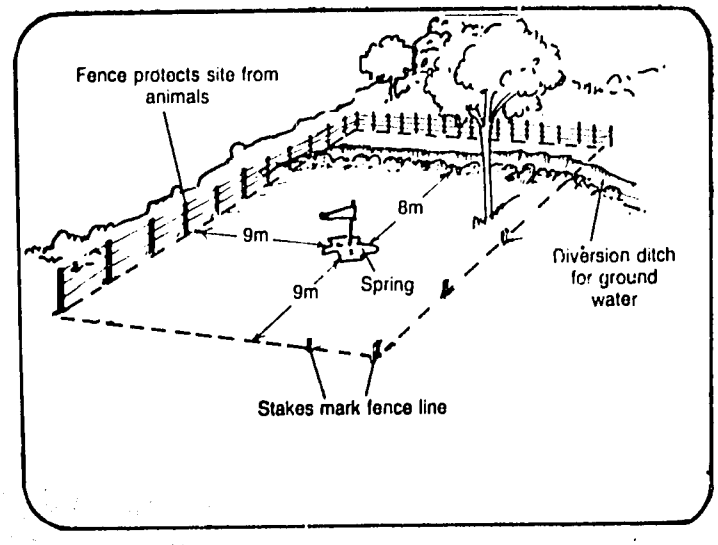

Figure 3. Preparation of Spring Box Site

General Construction Steps

Follow the construction steps below. Refer to the diagrams noted during the construction process.

1. Locate the spring site and, with measuring tape, cord, and wooden stakes or pointed sticks, mark out the construction area as shown in Figure 3.

2. Dig out and clean the area around the spring to ensure a good flow. If the spring flows from a hillside, dig into the hill far enough to determine the origin of the spring flow. Where water is flowing from more than one opening, dig back far enough to ensure that all the water flows into the collection area. If the flow cannot be channeled to the collection area because openings are too separated, drains will have to be installed. Information on the installation of drains appears in the section on the development of seepage collection systems.

   Flow from several sources may be diverted to one opening by digging far enough back into the hill. When digging out around the spring, watch to see if the flow from the major openings increases or if the flow from minor seeps stops. These signs indicate that the spring flow is becoming centralized and that most of the water can be collected from one point. The goal is to collect all available water from the spring. It is generally easier to collect water from one opening than from several.

   Dig down deep enough to reach an impervious layer. An impervious layer makes a good foundation for the spring box, and provides a better surface for a seal against underflow. If an impervious layer cannot be reached, attempt to construct the box in the most impermeable soil you can find.

   Pile loose stones and gravel against the spring before putting in the spring box. The stones serve as a foundation for the spring box and help support the ground near the spring opening to prevent dirt from washing away. They also provide some sedimentation. For fast flowing springs, large stones with gravel between them should be placed around the spring to prepare a good solid base. Figure 4 shows an example of gravel and stone placed between the spring box and the spring.

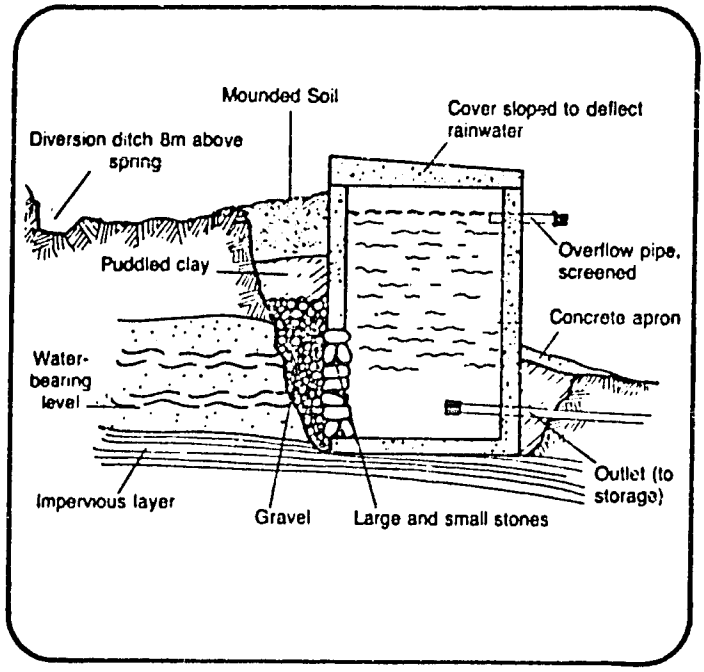

Figure 4. Spring Box with Open Side

If a spring flows from a single opening on level ground, dig out around the opening to form a basin. Be sure to dig down to impervious material to form the base. Line the basin with gravel so that the water flows through it before it enters the spring box. This is shown in Figure 5.

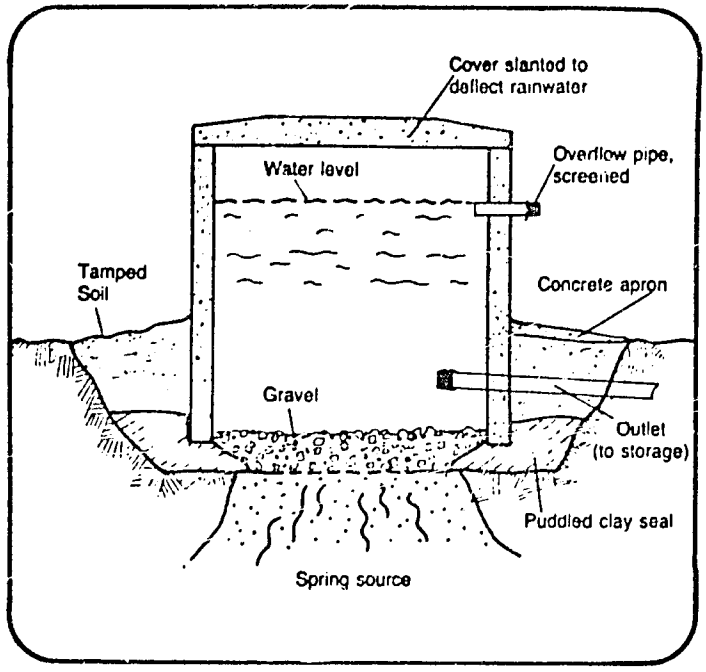

Figure 5. Spring Box with Open Bottom

4. Approximately 8 m above the spring site dig a trench for diverting surface run-off. The trench must be large enough to catch surface flows from heavy rains. If large stones are available in the construction area, use them to line the diversion trench to increase the rate of run-off and prevent erosion.

5. Mark off an area about 9 m X 9 m for a fence. Place the fence posts 1 m apart and string the fence. A fence is useful to prevent animals from frequenting the spring site.

Concrete Construction Steps

In order to have a strong structure, concrete must cure at least seven days. Strength increases with curing time. Therefore, construction of the spring box should begin at the site during the first day of work. If the concrete is poured on the first day, seven days will be available for site preparation before the spring box is put in place. Be sure that all tools and materials needed to build the forms and mix the concrete are at the construction site.

1. Build wooden forms. Cut wood to the appropriate sizes and set up the forms on a level surface. The outside dimensions of the forms should be 0.1 m larger than the inside dimensions. A form with an open bottom should be built for a spring flowing from one spot on level ground. For springs from hillsides, a spring box form with a partially open back must be constructed as shown in Figures 6 and 7. The size of the opening depends on the area which must be covered to collect the water. When building forms for a box with a bottom, be sure to set the inside forms 0.1 m above the bottom for the floor. This is done by nailing the inside form to the outside form so that it hangs 0.1 m above the floor. Make holes in the forms for the out-flow and overflow pipes. Place small pieces of pipe in them so that correctly sized holes are left in the spring box as the concrete sets. A form for the spring box cover must also be built. Build all forms at the site.

   Forms must be well secured and braced before pouring the concrete. Cement is heavy and the forms will separate if the bracing is not strong enough. One useful method is to tie the braces together with wire as shown in Figures 6 and 7. Drill holes in the forms and place wire through them. Using a stick, as shown, twist the wire to tighten it and force the forms together.

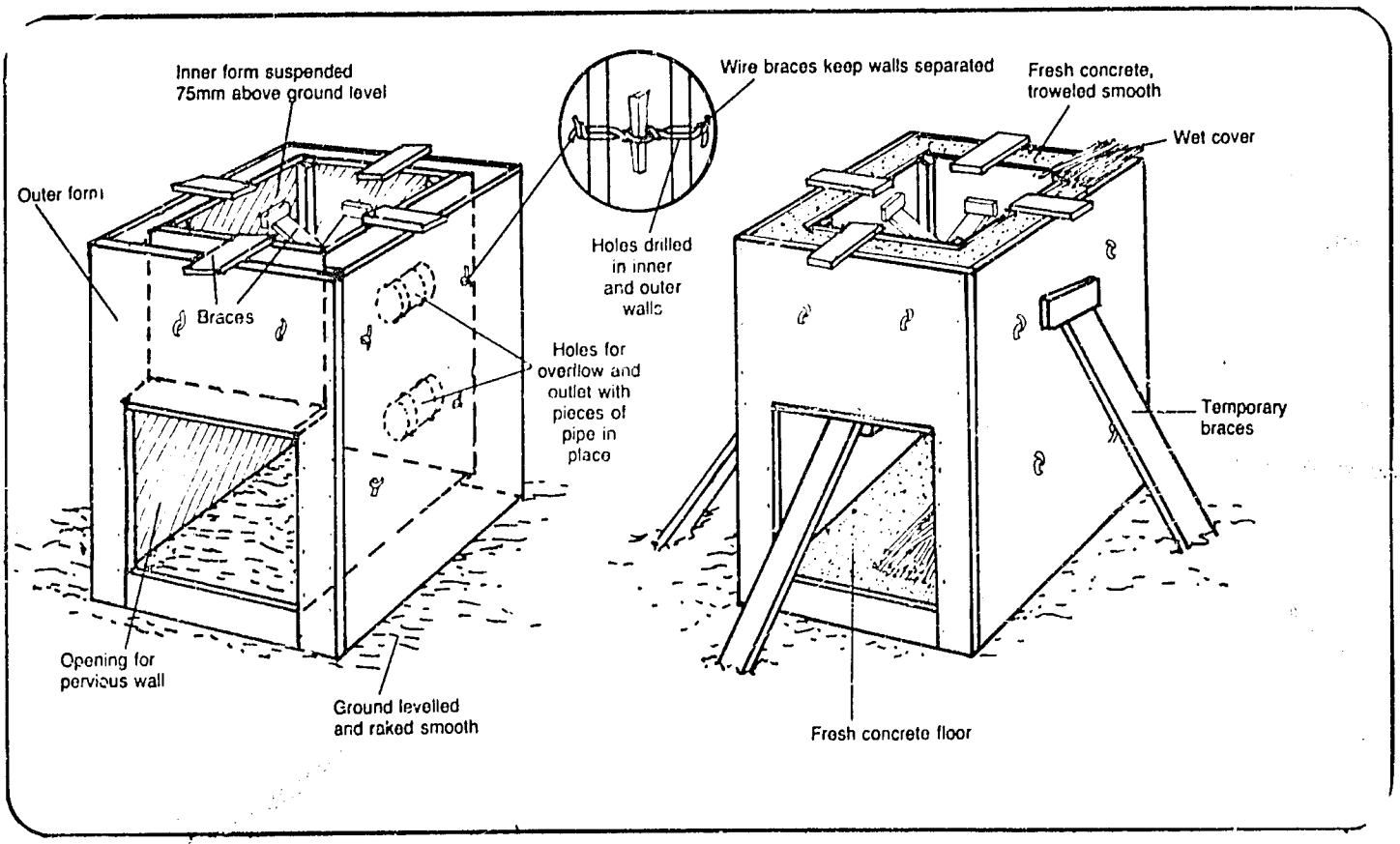

Figure 6. Forms for Spring Box with Open Side

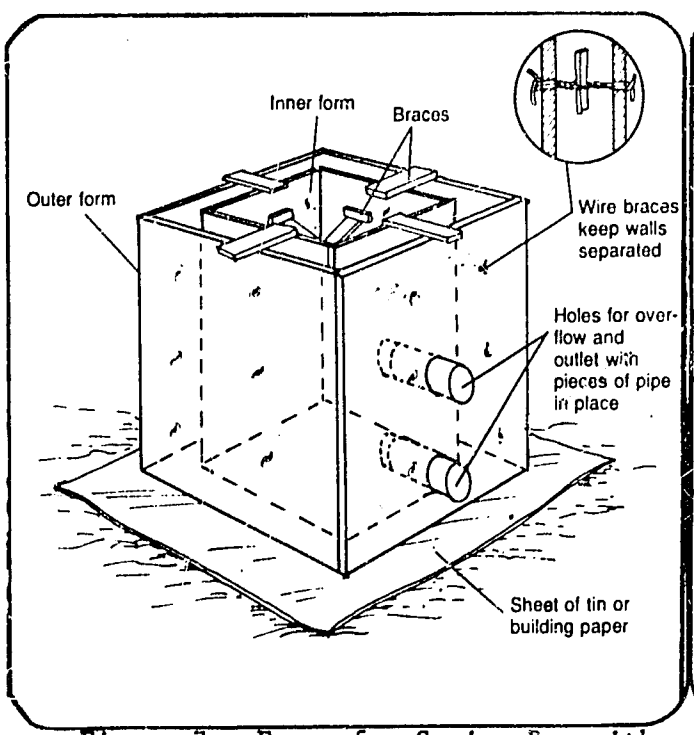

Figure 7. Forms for Spring Box with Open Bottom

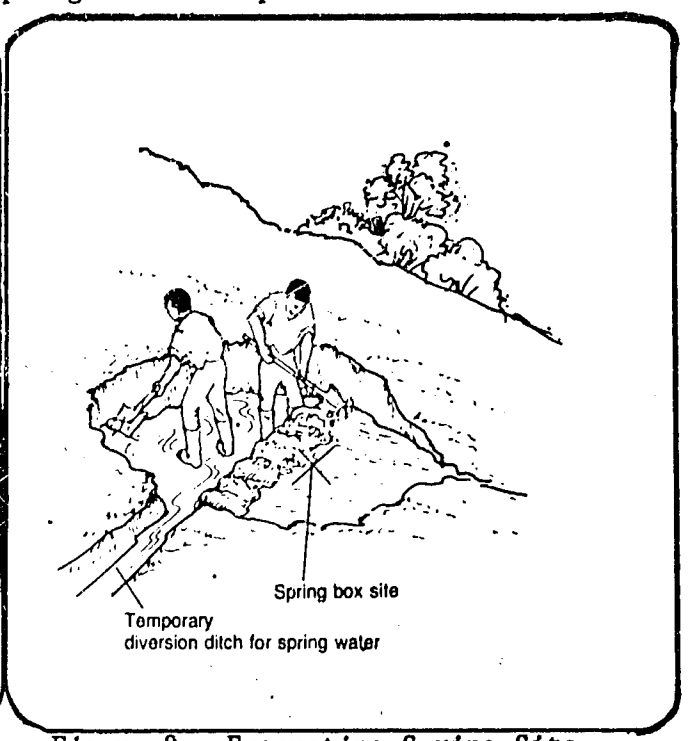

Figure 8. Excavating Spring Site

2. Set the forms in place. They should be either at the permanent site of the spring box or nearby so it will not be difficult to move the completed structure. If the forms are set and concrete is poured at the permanent site, water must be diverted from the area. This usually can be done easily by digging a small diversion ditch, as shown in Figure 8. Make sure that no water reaches the forms so that the concrete can cure.

   If water diversion is difficult, build the forms and pour concrete on a level spot very near the spring. Once the concrete dries, remove the forms and set the completed structure in place. This will require six to eight people.

3. Oil the forms. Put old motor oil on the wooden forms so the concrete will not stick to them.

4. Prepare the reinforcing rods in a grid pattern for placement in the forms for the spring box cover. Make sure there is 0.15 m between the parallel bars and that the rods are securely tied together with wire. Then position the reinforcing rods in the form. See Figure 9 for an example of reinforcing rod placement in the spring box cover. Major reinforcing is not needed for the spring box walls but some minor reinforcing around the perimeter of the walls is good to prevent small cracks in the cement. Four bars tied together to form a square should be placed in the forms.

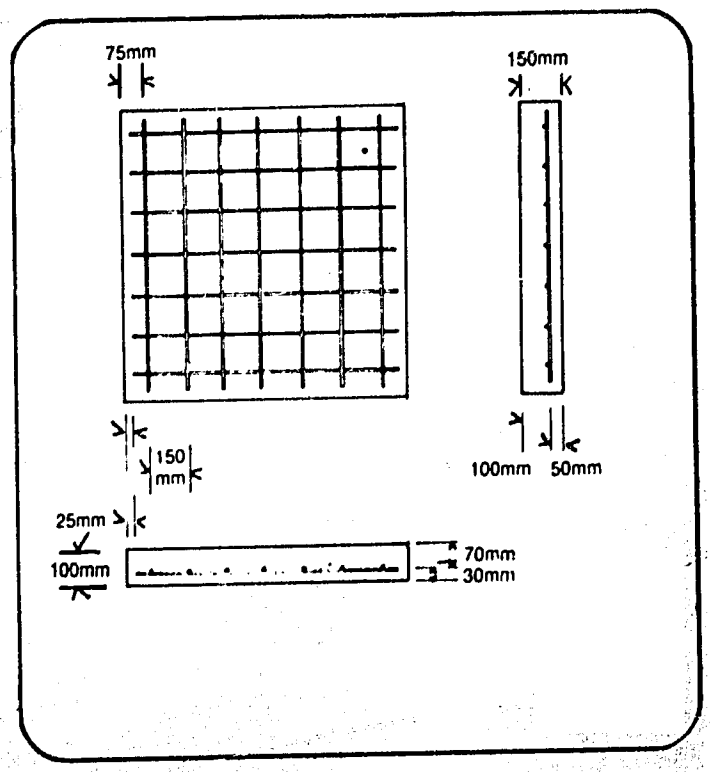

Figure 9. Placement of Rebar in Concrete Slab

5. Mix the concrete in a proportion of one part cement, two parts sand, and three parts gravel (1:2:3). Add just enough water to form a thick paste. Too much water produces weak concrete. In order to save cement, a mixture of 1:2:4 can be used. This mixture is effective with high quality gravel.

6. Pour the concrete into the forms. Tamp the concrete to be sure that the forms are filled completely and that there are no voids or air pockets that can weaken it. Smooth all surfaces. Smooth the concrete for the spring box cover so the middle is a little higher than the sides (convex shape), as shown in Figure 10. This will allow water to run off the cover away from the spring box.

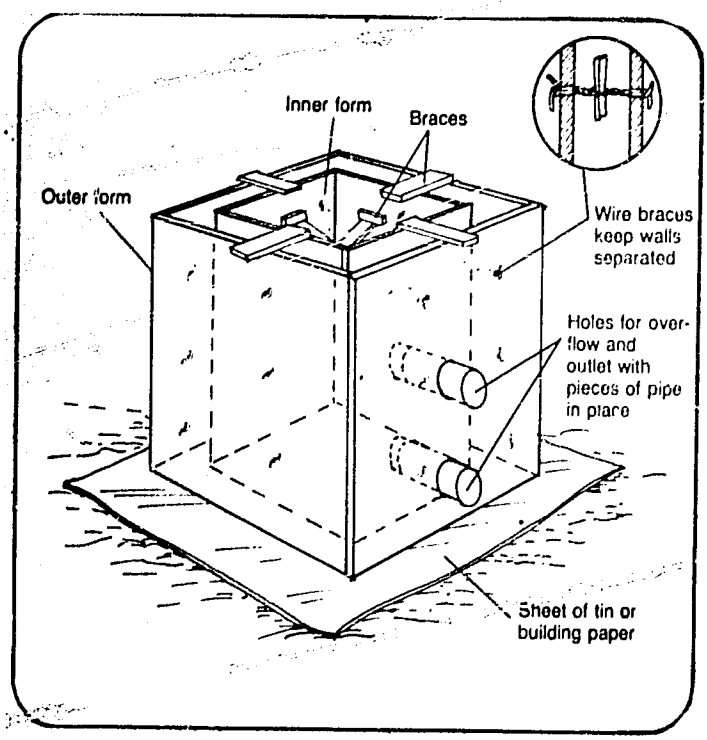

Figure 10. Forms for Spring Box Cover

7. Cover the concrete with canvas, burlap, empty cement bags, plastic, straw or some other protective materials to prevent it from losing moisture. The covering should be kept wet so water from the concrete is not absorbed. If concrete becomes dry, it no longer hardens, its strength is lost, and it begins to crack. Keep the cover on for seven days or as long as the concrete is curing.

8. Let the concrete structures set for seven days, wetting the concrete at least daily. After seven days, the forms can be removed and the box can be installed.

Installing a Spring Box

The spring box must be installed correctly to ensure that it fits on a solid, impervious base and that a seal with the ground is created to prevent water from seeping under the structure.

1. Place the spring box in position to collect the flow from the spring. If the flow comes from a hillside, the back of the spring box will be open. Stones should be placed at the back of the box to provide support for the structure and to allow water to enter the spring box. Figure 4 shows the placement of open-jointed rock in a completely installed spring box on a hillside. On level ground, be sure that the spring box has a solid foundation of impervious material. Place gravel around the box or in the basin so that water flows through it before entering the box.

2. Seal the area where the spring box makes contact with the ground. Use concrete or puddled clay to form a seal that prevents water from seeping under the box.

3. Be sure that the area where the spring flows from the ground is well lined with gravel, then backfill the dug out area with gravel. The gravel fill should reach as high as the inlet opening in the spring box so that the water flowing into the structure passes through gravel. In Figure 4, the gravel layer reaches the same level as the open stone wall. For spring boxes on level ground, gravel backfill is unnecessary.

4. Place the pipes in the spring box. Remove the pipe pieces used to form the holes and put in the pipe needed for out-flow and overflow. On both sides of the wall, use concrete to seal around the pipes so water does not leak out from around them. Place screening over the pipe openings and secure it with wire.

5. Disinfect the inside of the spring box with a chlorine solution. Before the spring box is closed, wash its walls with chlorine.

6. Place the cover on the spring box.

7. Backfill around the area with puddled clay and soil. On a hillside, place layers of puddled clay over the gravel so that they slope away from the spring box. The clay layer should nearly reach the top of the spring box and should be tamped down firmly to make the ground as impervious as possible. If only soil were used for backfill, it would have to be at least 1.5 to 2 m deep so that contaminated water could not reach the gravel layer. For springs on level ground, clay should be placed around the box. The clay foundation should slope away from the spring box so that water runs away from the spring outlet.

8. Backfill the remaining areas with soil to complete the installation.

Spring structures are easy to operate and maintain. One of the main advantages of springs as water sources is that they are inexpensive to develop. The structures needed to protect them require little attention after

installation. No structure, however, is completely maintenance free. Even the most simply designed spring structure needs periodic maintenance to ensure that it provides good quality water in sufficient quantities. The following describes the periodic maintenance needed for spring boxes so that they operate effectively for many years.

Maintenance of Spring Boxes

The maintenance of spring boxes requires that a check be made to ensure that the structure adequately protects the water source and that all available water is being collected. Examine the spring box periodically to ensure that there is no silt build-up and that water quality is good. Study the following conditions at the site to ensure that the spring is well-protected and free from any operating problems.

Determine whether the diversion drainage ditch above the spring is doing an adequate job of removing surface water from the area. If not, the trench should be improved. The diversion ditch should be lined with gravel or stones to increase flow and to prevent erosion of the sides. Grass can be planted in the trench to prevent erosion, but heavy growth will block flow. Be sure to check the diversion ditch periodically to make sure that grass is not too high and that no other obstructions will block water flow.

If there is a fence above the spring, make sure it is in good repair and is effectively keeping animals away from the spring.

Check the up-slope wall to be sure it is solid and erosion is not wearing it away. If there are signs of heavy erosion or settling, add additional backfill of top soil, clay or gravel. Build up the hill with stones and plant grass to help control erosion around the spring box.

Check the water. If there is an increase in turbidity or flow after a rainstorm, surface run-off is reaching the source and contaminating it. Identify the source of the run-off and improve the protection of the spring.

Check the cover to be sure the box is watertight. Make sure that the cover is not removed by the users and that contamination is not being introduced by people dipping buckets and other utensils into the spring box.

Determine that all available water is being collected by the system. Watch out for water seeping from the sides or from underneath the spring box. If water seeps out, seal the leak with clay or concrete so that all flow is diverted into the spring box.

Ensure that the system is cleaned adequately. Once a year disinfect the system and clean the sediment out of the spring box. To clean the system, remove the cover. Allow the water to drain from the spring box by opening the valve on the outlet pipe. If the box has only one pipe for outlet and overflow, use a bucket to empty the spring box as shown in Figure 1. Then use a small shovel to clean out the sediment collected on the bottom of the box. Sediment removal will prevent clogging and build-up which causes the box to fill up more quickly.

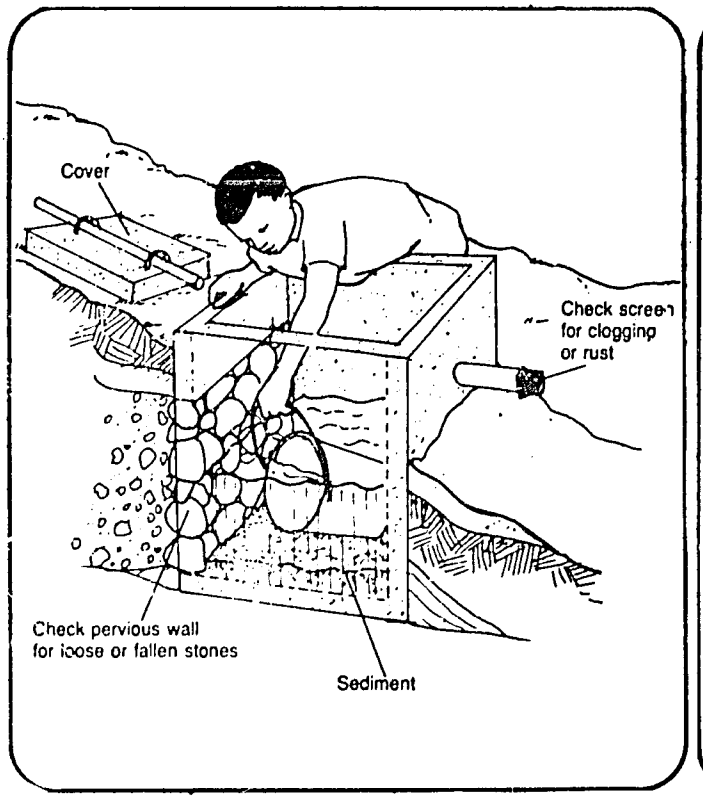

Figure 11. Emptying Spring Box

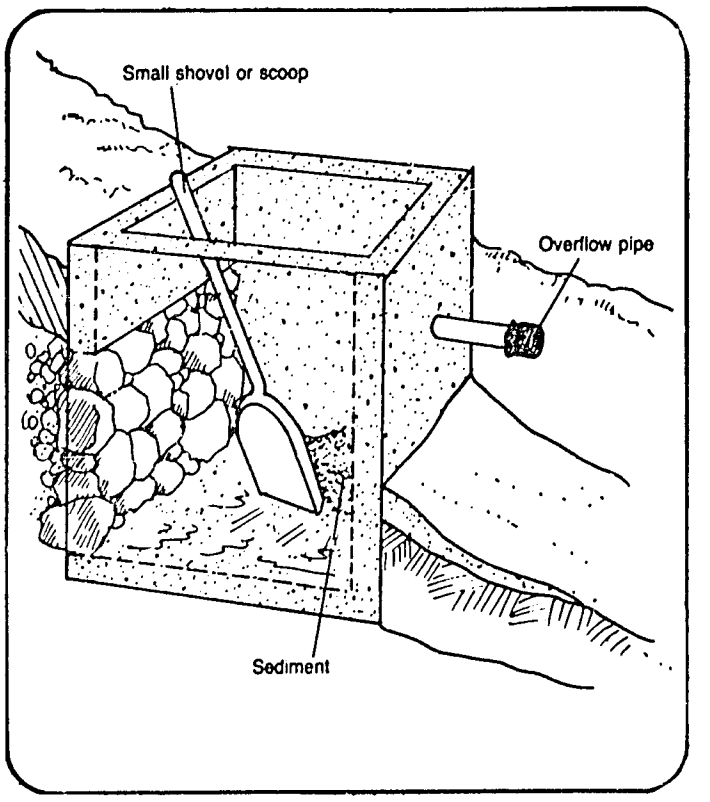

Figure 12. Removing Sediment

If a pump is built into the spring box to collect sediment, a drain pipe can be installed to carry sediment away. The drain pipe should have a valve. This type of installation is especially useful when tapping a fast flowing spring.

After cleaning the tank, follow the procedures for disinfection explained in "Disinfecting Wells," RWS.2.C.9. All walls of the spring box should be washed with a chlorine solution and chlorine should be put directly into the water. If possible, the chlorine should be allowed to stand for 24 hours. If the chlorine cannot stand that long, apply two doses of chlorine twelve hours apart to ensure complete disinfection. Figures 11, 12, and 13 show the cleaning and disinfection of a spring box.

Check the screening on the pipes to see if cleaning is necessary. If screens are clogged or very dirty, they should be either cleaned or changed. Always use copper or plastic screening to prevent rust.

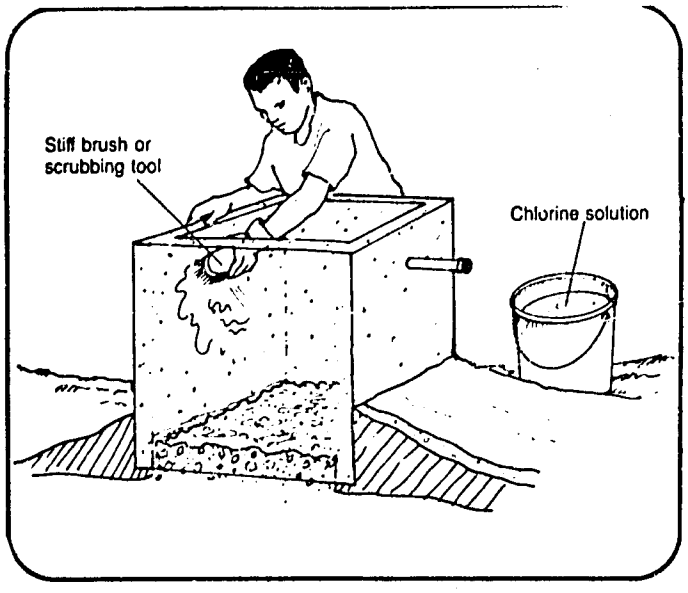

Figure 13. Scrubbing Walls with Chlorine Solution

SEEPAGE COLLECTION SYSTEM

Sometimes springs flow from many openings over a large area. To collect the water, a system of collectors made of perforated pipe, an anti-seepage wall, and a spring box must be built.*

Constructing Seep Collection System

The collectors must extend on both sides of the spring box and anti-seepage wall. Figure 1 shows an example. To install collectors, dig trenches into the water-bearing soil until an impervious layer is reached. In this way, water is taken from the deepest part of the aquifer (the underground water-bearing strata) and most of the available water can be collected. The trenches should extend the necessary length for collecting all available water and should be about 1 m wide.

Lay 50-100 mm diameter plastic perforated pipe or 100 mm clay pipe in the trenches. Perforations in the plastic pipe should be about 3 mm in diameter. On the uphill side of the trench, place enough gravel to cover the pipe. On the downhill side, build up a small clay wall to support the pipe. The pipe should have a 1 percent slope (0.01 m slope per 1 m distance) toward the point of collection. Flexible plastic tubing with slots already formed should be used if available. It is light and can be cut with a handsaw.

Clean-out pipes should be installed in the collection system. Attach lengths of pipe to the ends of the collection pipes. At the end of the clean-out pipes, place an elbow joint to which a vertical length of pipe is connected as shown in Figure 1. The pipe extends above ground level and is capped.

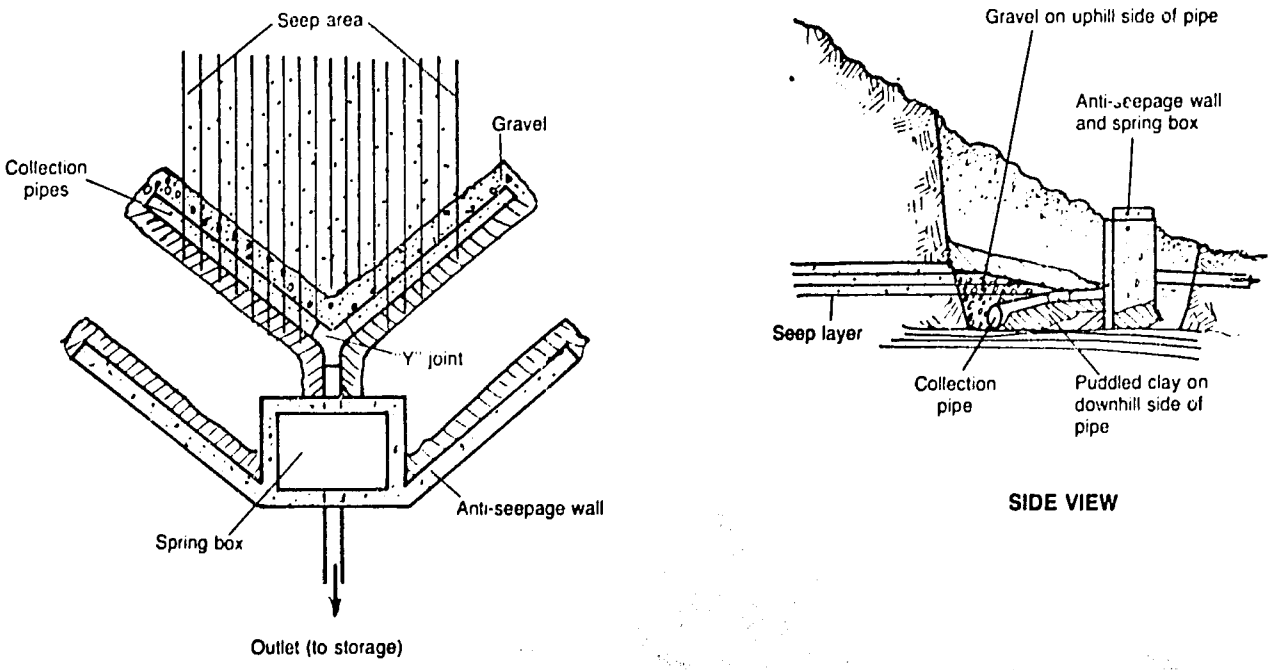

Figure 1. Seepage Collection System

*Note to participants: Another group is working with spring box construction.

TAKEN FROM WATER FOR THE WORLD TECHNICAL NOTE RWS 1.D.1, 1.C.1 and 1.0.1.

The next step is to build a concrete or impervious clay cutoff or anti-seepage wall. Dig down to an impervious layer for a good foundation. Make the forms for the cutoff wall 0.15 m thick. Follow the same procedures for constructing the cutoff wall as for the retaining wall. There must be a good seal between the wall and the ground so that no water seeps underneath. Water must be directed into the trenches and collectors. A small spring box can be built at the inside angle of the winged-wall with the wall forming two sides. If a spring box is built, the forms must be set at the same time as the cutoff wall. Water must be diverted from the construction area by small ditches for the seven days needed for the concrete to dry. Forms must be well braced and have holes for the in-flow and out-flow pipes. Always pour the seep collection wall and spring box in place. The structure will be much too heavy to move after casting.

When using clay, be sure to remove any debris from the site and tamp the clay well so that the small dam or wall does not let water seep through. The clay walls should be built like walls of a dam with a 2:1 or 3:1 slope. Put the clay down in layers 150 mm thick and tamp each layer down well to ensure good compaction. Keep the clay moist. Lay and tamp each 150 mm layer until the maximum height is reached. The walls should be well bonded to the spring box.

The construction of a seep collection system is more difficult and expensive than a simple spring box.

Installation of collectors requires more work and some experience. Once the collectors are installed, however, the construction of the seep cutoff wall is no different from spring box construction. The same steps must be followed, the same mixture of concrete used and the same general rules for curing concrete and for placement must be followed.

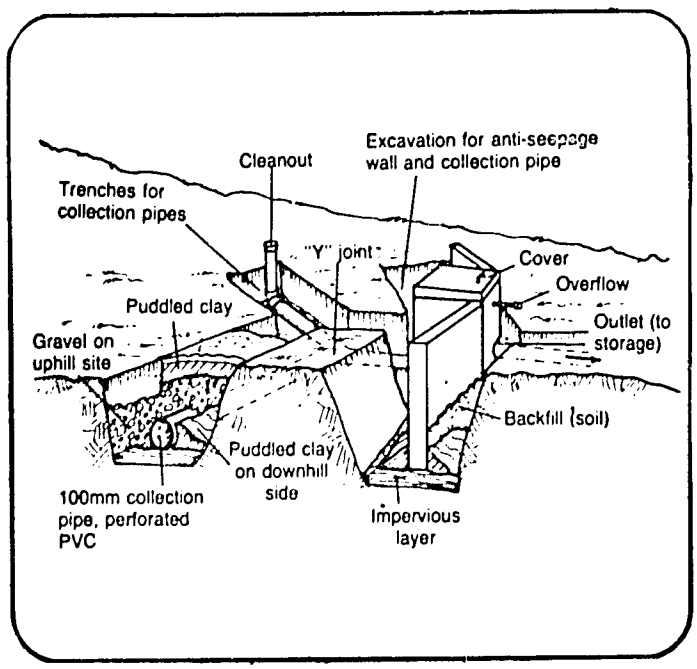

Figure 2. Seepage Collection System

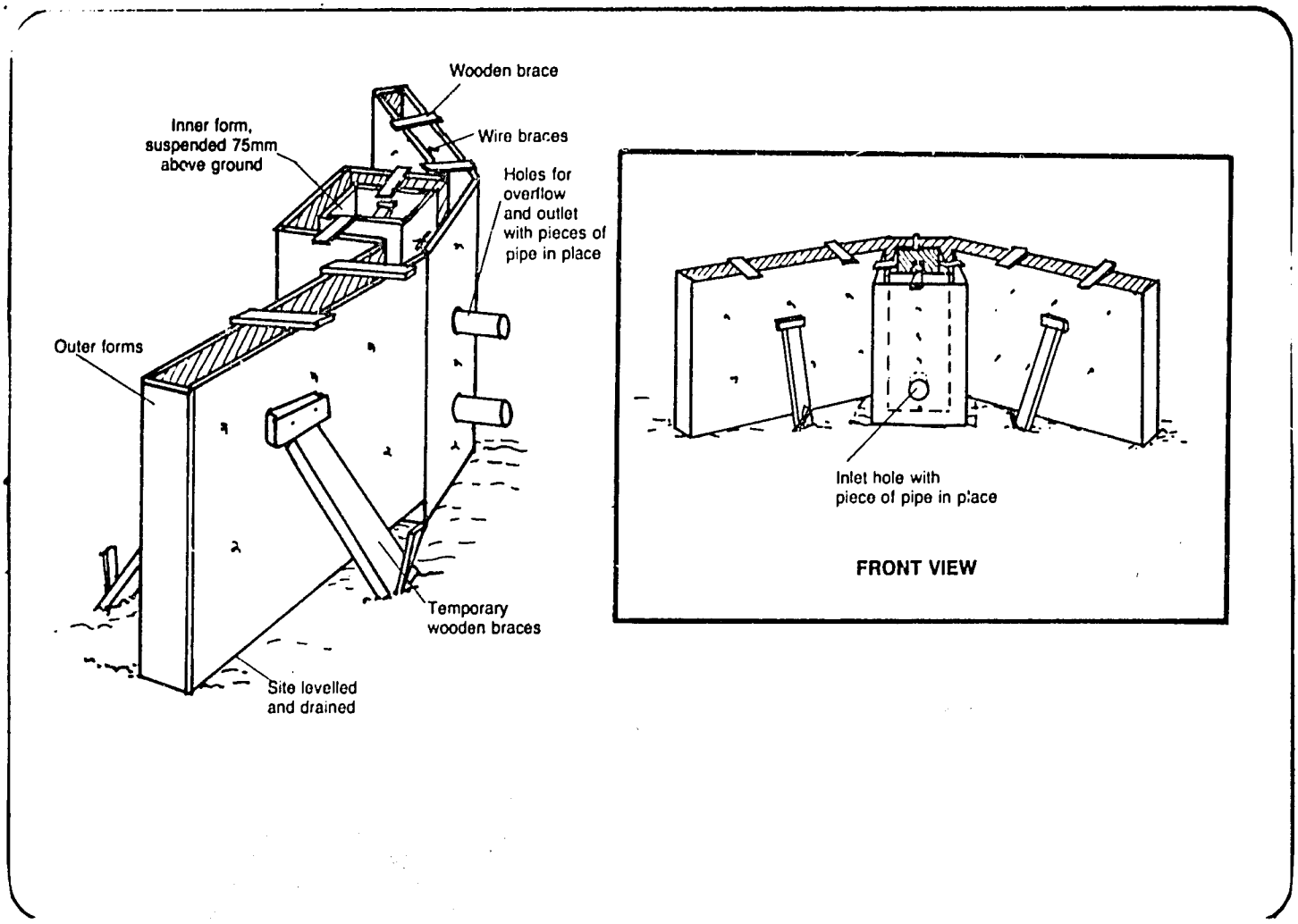

Figure 3. Forms for Anti-Seepage Wall and Collection Box

Operating and maintaining seepage collection systems is similar to spring boxes except that extra care must be taken in the maintenance of the collection pipes. Although collection pipes are lined with gravel to filter out sediment, the pipes can still clog.

If clogging occurs, substantially less water will reach the collection box. If water flow decreases, suspect that the collection system is clogged.

To clean the clogged pipes, remove the cap from the clean-out pipe and pour water into it. Use either a hose or a bucket so that sufficient force is available to break up the sediment. See Figure 4.

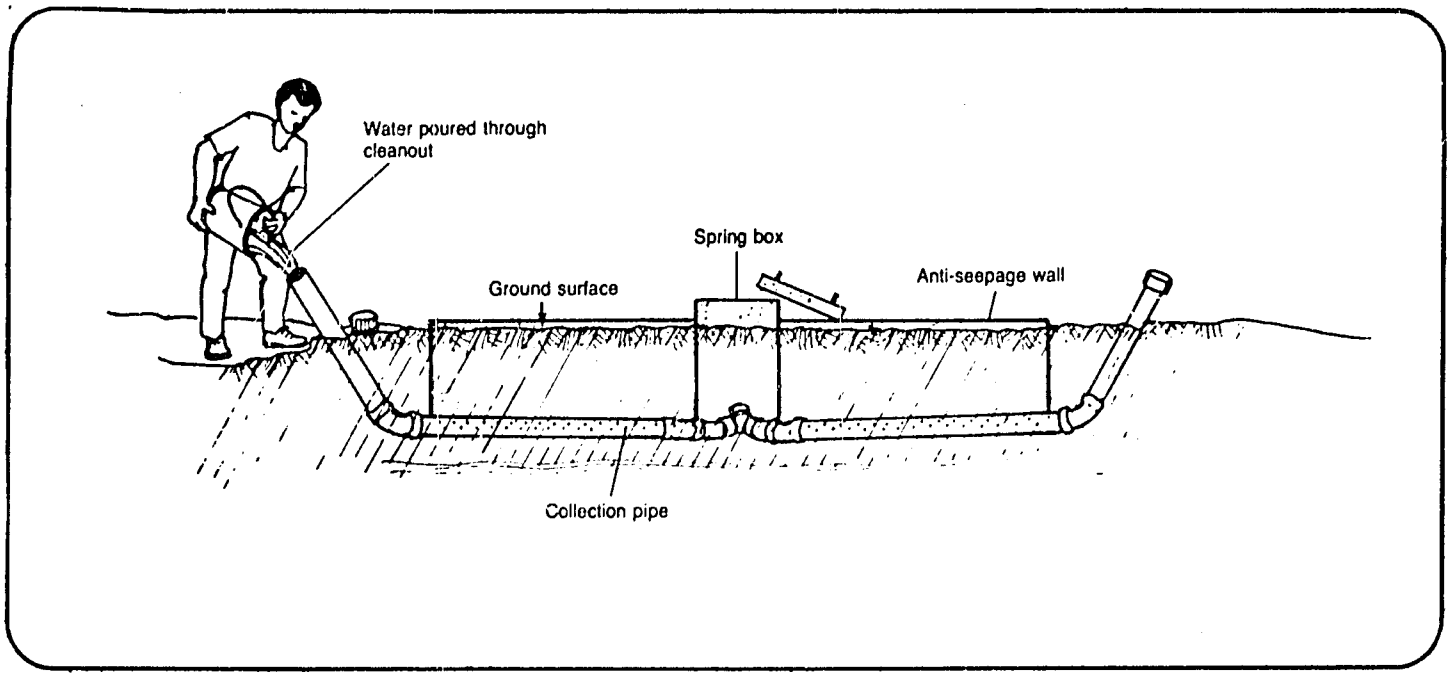

Figure 4. Flushing Out Seepage Collection System

STORAGE TANK

Purpose of Storage Tank

The construction of a storage tank for spring flow is an effective way to improve a spring water source with a low rate of flow. Storage tanks can be built as an addition to any type of spring containment system, retaining wall, spring box, or seepage collection system. The water flow from the spring is piped to a storage tank where the water accumulates and can be accessed by villagers through an outflow pipe and faucet. The water is stored in the tank overnight and is then available in large quantity when needed. Figure 1 shows a village map of a spring and a collection tank. The advantages of collection tanks are these:

1. The tank serves to store water that is provided by the spring during low-demand periods (such as overnight) for use during high-demand periods (such as early morning).

2. Water can be accumulated in vessels more quickly, since stored water will flow from the tank faster than from many direct-access spring flow pipes. Thus villagers won't have such a long wait for water during high use periods.

3. Water is captured overnight, thus resulting in less waste from unused run-off water.

4. Water can be kept clean, since it is stored in a tight, covered storage tank.

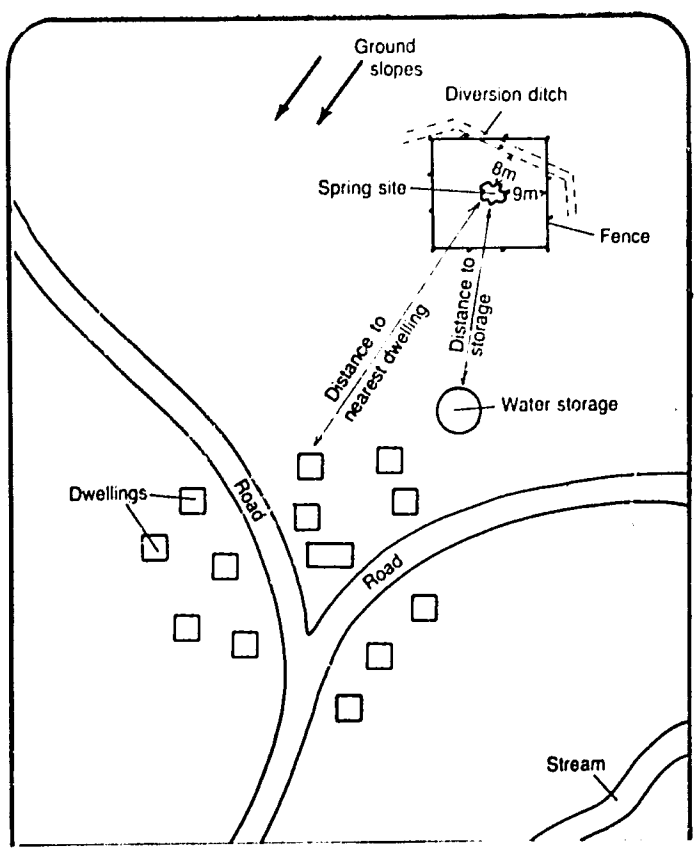

Figure 1. Location Map

TAKEN FROM WATER FOR THE WORLD TECHNICAL NOTE - RWS 5.D.2

Sizing a Storage Tank

To determine how large a storage tank must be, it is necessary to calculate how much water is used at various times during the day, and compare this to how much water is supplied by the source for those same time periods. The difference between supply and use will mean either that water will be drawn out of the tank or will flow into the tank. There are a number of ways to determine tank capacity; however, they are beyond the scope of this training program. The tank could be a variety of sizes and still serve as an improvement to villagers; however, it never need be larger than the volume of water yielded by the spring during the night.

Shape of a Storage Tank

All other factors being equal, the most economical tank shape is circular, then nearly-circular, then square, and then rectangular. For ease of construction, certain shapes are easier than others:

Circular tanks: The most economical shape to use, but not easy to construct, especially for small diameters.

Octagonal (8-sided) tanks: The best shape to use, but not easy to construct for diameters less than 2.5 meters (or capacities smaller than 3,200 liters).

Hexagonal (6-sided) tanks: Good for tanks between 1,700-3,200 liters (diameters not less than 2 meters).

Square tanks: This is the traditional shape, and easiest to construct for small capacities.

Rectangular tanks: The least-economical shape, especially as one side becomes much longer than the other. However, due to physical constraints of the site, it may be necessary to use this shape. Keeping it as nearly square-shaped as possible will make a more economical design.

For example the most economical dimensions for a 1,000 liter tank would be 1 meter wide, 1 meter long, and 1 meter high.

Constructing a Storage Tank

Storage tanks should be constructed with a reinforced concrete foundation and floor, followed by rock and mortar walls. The roof can be of wood frame or reinforced concrete construction.

The location of the storage tank must be selected so that water from the spring can flow into the tank and fill it. Further,the tank should be in a location that is convenient for drawing water from a faucet piped from the bottom of the tank.

The foundation for a storage tank is constructed in a similar way as that described for the retaining wall. Excavation to a suitable soil sub-base is first performed, then a layer of broken stone or gravel is placed over the sub-base. The location of the foundation for the walls should be carefully aligned by staking the locations of corners. After the foundation is

completed, the construction of the rock and mortar walls should be started at the corners. After the corners are built to the height of two or three courses of rock, then build the walls from corner to corner maintaining the straight alignment of each wall.

Storage tank walls can be stepped as shown in Figure 2. Stepping the wall is an economical use of construction materials and puts the thickest portion of the wall at the base where the water pressure will be the greatest.

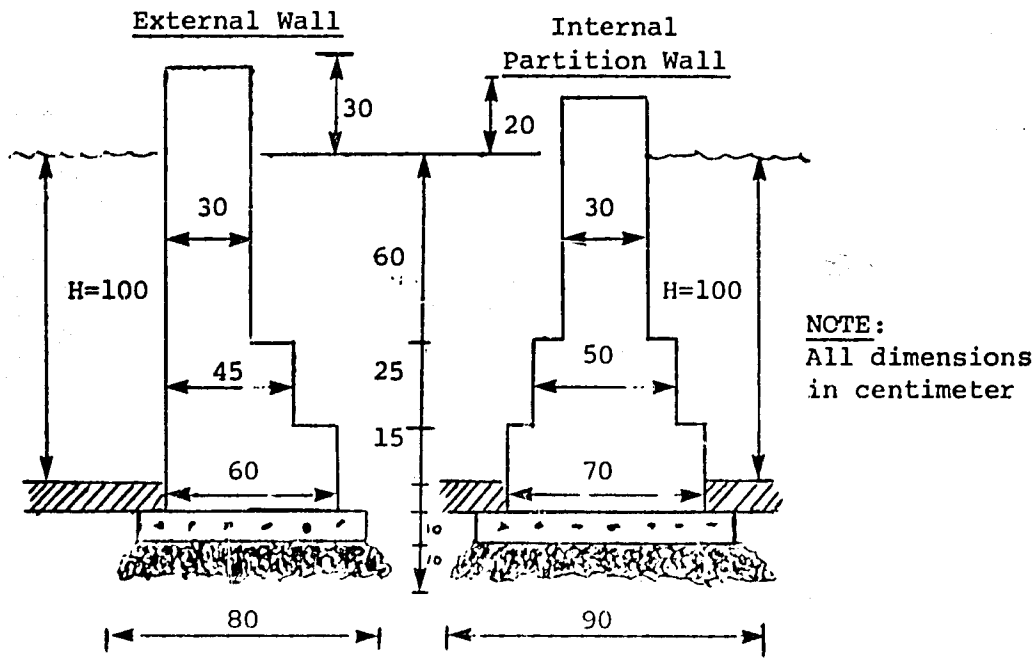

Figure 2. Storage Tank Wall

The floor of the tank may be either of masonry (i.e., mortared brick or stone) or reinforced concrete. A bed of gravel or crushed stone must be put down, roughly pitched so the floor will slope downwards to the drain pipe. As soon as the final concrete or plaster has set, the tank should be filled to a depth of about 30 cm to help the curing process (a deep depth of water would exert too much pressure on the floor which the cement would not be strong enought to support). After two weeks the tank can be filled completely and checked for any visible leakage.

Roof design and construction is complicated, but the basic considerations for a storage tank roof include:

a. It must be able to support its own weight, plus the weight of one or more persons

b. It should be relatively tight to prevent rain and dust and debris from entering the tank

c. It should have an access way for a person to inspect or enter the tank

d. It should be made of a durable material, timber and slate, or concrete, or galvanized iron sheeting. Avoid a material such as thatch, which can house vermin.

The finished walls and floor should be plastered with cement mortar to make the tank as watertight as possible. Plastering is discussed in Handout 8-1: Cement, Concrete, and Masonry.

Piping for a Storage Tank

The piping for a small storage tank will include:

a. an inlet pipe from the water source

b. an outlet pipe to the supply tap (faucet)

c. a drain pipe at the bottom of the tank

d. an overflow pipe near the the top of the tank

e. a valved bypass pipe which connects the inlet and outlet directly, allowing the tank to be emptied for maintenance

Figure 3 shows a typical piping arrangement.

Finished Grading

The ground around the reservoir should be mounded so that rain run-off will flow away from the tank. The surrounding land should be stabilized against erosion. If there is generally heavy rain run-off, then suitable drainage channels should be made. The drainage channel for the overflow should also be carefully constructed, and preferably should carry the water to where it can be utilized (such as for an animal water-hole, or for irrigation of a nearby garden).

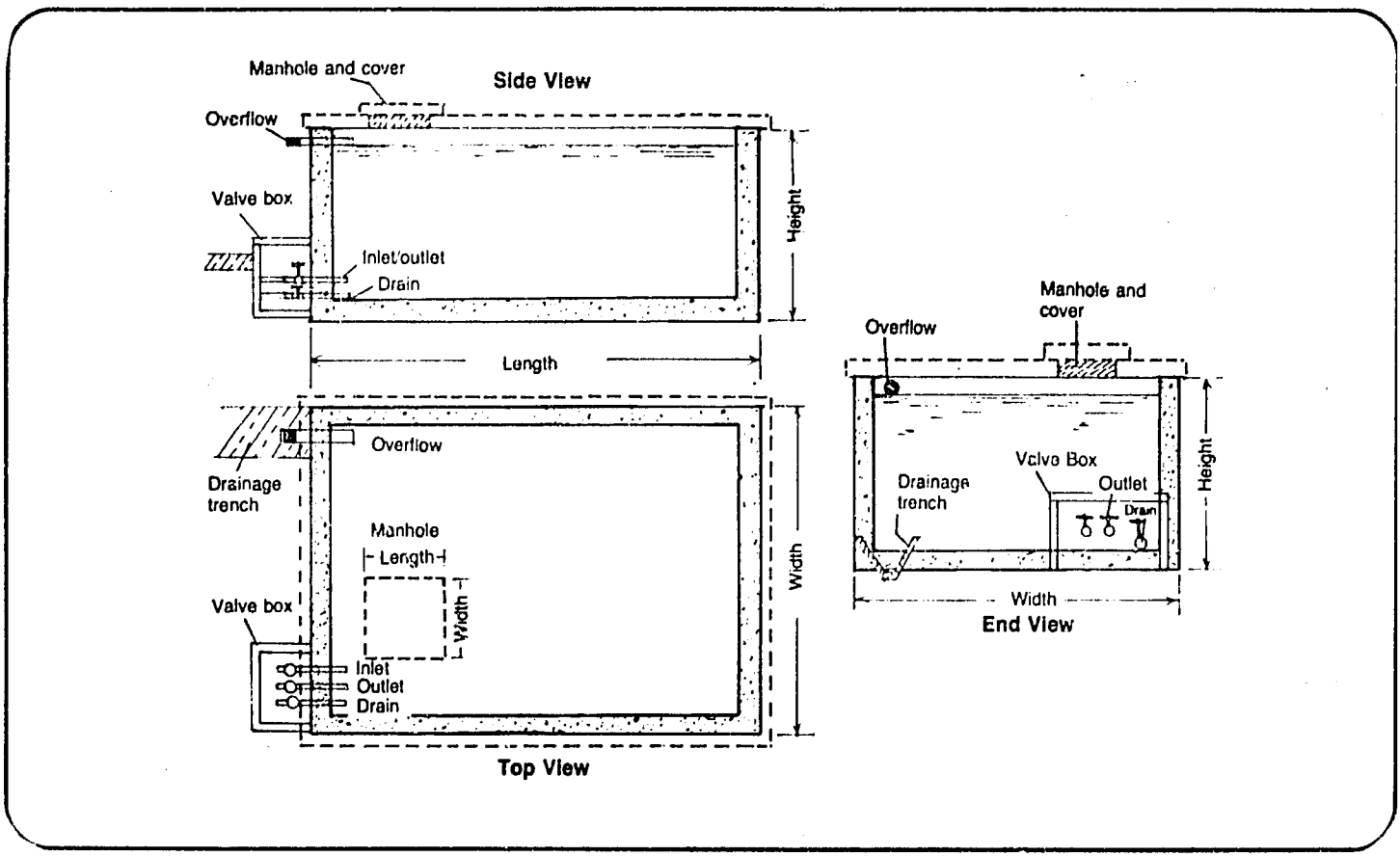

Figure 3. Storage Tank Design

Maintaining a Storage Tank

The maintenance of water storage tanks is necessary to ensure the quality of the water stored. Maintenance of tanks basically involves two important procedures: prevention of contamination, and cleaning the tank periodically to ensure that water is fresh.

General Maintenance

Water quality in storage tanks should be preserved. All storage tanks should be checked monthly to ensure that all necessary maintenance is done when needed. Never delay in attending to any problems that arise.

When looking at the tank, make sure to check the following:

- Covers. Make sure the cover fits tightly over the tank. There should be no space for dust or leaves to enter the storage tank. The cover should fit tightly enough to prevent the entry of light. Light stimulates the growth of algae in the tank.

- Potential Sources of Contamination. Check the area around the storage tank to make sure that no contaminants have been introduced to the area.

No waste disposal or garbage disposal sites should be near the storage tank, especially when they are located below ground. Under no circumstances should any disposal sites or animal pens be placed on ground above the cistern. Contaminants can flow downhill and destroy the quality of water. A ditch should be dug near the cistern to direct surface water away from the cistern or storage area. Keep animals out of the drainage area.

- Screens. Check the screens covering the pipe ends to make sure they are in good repair. Broken screens on outlet and overflow pipes are easy entry points for mosquitoes and small animals. All damaged screens should be replaced.

- Pipes. Check all pipe connections to ensure that there are no leaks in the system. When leaks occur, pipes should be tightened or repaired. Check all valves for proper functioning.

- Structure. Repair any damage that may occur to the cistern or storage tank. Add concrete to repair any chips, broken edges or cracks.

Cleaning the Tank

No matter how much prevention is practiced, a storage tank requires disinfecting and cleaning. To clean and disinfect the tank do the following:

- Drain all water out of the storage tank. Usually, this is easily accomplished by letting the supply in the tank fall over time and draining the last bit.

- After the tank is drained, sweep and scrub it until all dirt and loose material are removed.

Then choose the most appropriate method for disinfecting the tank.

- Fill the tank to overflowing with clean water and add enough chlorine to make a 50 mg/l solution. Add the chlorine to the tank as it is filling to get sufficient mixing. After the tank is filled, allow it to stand for at least six hours and preferably more. After sufficient time has passed, drain the tank and allow it to refill for regular use.

- A second and faster method can be used when little time is available. Directly apply a very strong, 200 mg/l, chlorine solution to the inner surfaces of the tank. For best results, brush the walls with the solution and allow the chlorine to stay on the walls for at least 30 minutes before the tank is refilled.

TWO SPRING CAPPING SITUATIONS

Spring A

Springwater flows up into an open hole in a flat, sandy area. If often fills the hole and spills out onto the sides, which become muddy. Villagers step across stones to get to this waterhole. Animals also sometimes come to drink. There is always enought water in the hole for many villagers to dip their containers and collect water. How would you cap this spring in order to protect it from contamination and let the spring flow directly into the villagers' water containers?

- How would you investigate the flow?
- What type of spring structure would you use? How would it remain stable?
- How would you protect the spring flow?
- How would you excavate? How big an area? What slope?
- How would you drain and clean up the area?
- What materials would you need? How much?

Spring B

At present there is a small tricle of water flowing down from several points across a rocky hillside. This collects in several small, silty clay depressions side by side at the bottom of the hill. Villagers come to gather water in their containers from these open pools covered with algae. There is adequate slope down the valley, but water flowing out of the pools now collects in a stagnant marshy pond. How could you cap this spring?

- How would you investigate the flow?
- How would you make this into one spring and service pipe under these conditions?
- What type spring structure would you use?
- How big an area would you excavate? What slope? How deep?
- How would you drain and clean up the area?
- What materials would be required?

SYNOPSIS

SESSION 18: PLANNING FOR YOUR FIRST SPRING CAPPING PROJECT

Total Time: 3 hours

PROCEDURES	TIME	HANDOUTS	FLIPCHART MATERIALS
1. Introduction	5 min.		Session Objectives
2. Individual Reviewing/ Summarizing	60 min.		
3. Developing Work Plan	90 min.	18-1: Work Plan Chart	Task Assignment
4. Summary and Closure	10 min.		

Previous Page Blank

SESSION 18: Planning for Your First Spring Capping Project

Total Time: 3 hours

OBJECTIVES

By the end of this session, trainees will have:

- Developed a one-month plan for implementing a spring capping project

OVERVIEW

This session is intended to help the trainees plan for their first spring capping project. Throughout the course at the end of each major training session, the trainees worked with planning guides on how they could apply the skills and knowledge from that session to their first project. The next two to three hours will be spent reviewing these plans and beginning to work out the details for a one-month plan covering an entire spring capping project. A good deal of time has already been spent working on the technical skills and knowledge of capping a spring. Equally important are the skills and knowledge required to effectively plan and carry out a spring capping project—management skills. The management skills of planning, organizing, and coordinating are especially significant in spring capping since the village water supply is disrupted while the necessary construction activities are occurring. If resources and activities are not effectively coordinated, delays can cause numerous problems.

PROCEDURES

1. Introduction — Time: 5 minutes

Give the group the information in the overview and state the objectives.

2. Individual Reviewing/ Summarizing Activity — Time: 60 minutes

Give the participants 20 to 30 minutes to work on their own to review their notes and check back through their planning guides. They should write down any concerns they have or any unresolved questions.

At the end of the time spent on individual reflection and review, ask what they identified as concerns and unresolved questions. Lead a discussion for the next 30 minutes on answers and strategies for resolving these issues.

3. Developing A One-Month Work Plan For Capping A Spring — Time: 90 minutes

Introduce the concept of a one-month work plan as the mechanism by which the trainee can organize, schedule, and coordinate the resources and activities necessary for timely and successful completion of the project.

Assign the following task for the trainees to complete on their own. Give them 20 minutes. Distribute Handout 18-1: Work Plan Chart, and ask the trainees to use the chart to plan or lay out their first month's activities.

- Identify the activities you would undertake during the one-month work plan.
- How long would you estimate each activity will take?
- In what order would you schedule these activities so that events are coordinated effectively?

At the end of the 20 minutes, have each trainee join with one other person and discuss each other's plan. Urge them to offer each other comments and suggestions to help make the plans as realistic as possible. Give them 20 to 25 minutes for this joint discussion. Examples of issues that could be expected are:

- How much time can the trainee devote to this project?
- How many trips can she/he make to the designated village before actual construction begins?
- What resources are there in the village, both skills and materials?
- What resources does the trainee have?
- What transportation is available?
- Who should know about this project and who should be involved?

After the two-member teams have spent 20 to 30 minutes working together, lead a discussion of these questions with the total group (about 30 minutes):

- What are some examples of activities you feel should occur in week one?
- Which activities did you feel would take the most time?
- What problems might you anticipate in scheduling these activities?
- Throughout the project cycle, there are critical coordinating points, places where several elements have to come together for desired activity to occur. In looking back over the project cycle, where are some of these "critical coordinating" points?

This question is an important one. Ask trainees to think individually for a few minutes before you ask for their responses. Suggest they review the project cycle as well as reflect on the field activities they participated in during the last two weeks. Use the examples listed below to help clarify the question or to supplement their responses. List their responses on the flipchart.

Examples of "critical coordinating" points:

- Arranging to get your other work taken care of so you are free to concentrate on spring capping
- Ordering supplies so they arrive in time for start-up
- Arranging transportation of supplies so they arrive on time
- Recruiting the work force and fitting the work into their daily/seasonal activities
- Arranging for user surveys
- Collection of monies prior to construction
- Arranging for alternative water sources during construction

4. Summary and Closure — Time: 10 minutes

Refer back to the objectives for this session. Engage the trainees in a brief discussion of whether they feel the objectives have been reached. Summarize and emphasize the importance of planning and encourage them to continue working on this one-month plan as a tool for managing their spring capping activities.

MATERIALS

Flipcharts for:

Session objectives
Task assignment

Handouts:

18-1: Work Plan Chart

WORK PLAN CHART

Activity	When	Who Is Responsible?	Resources Required

Previous Page Blank

SYNOPSIS

SESSION 19: WORKSHOP EVALUATION

Total Time: 1 hour

PROCEDURES	TIME	HANDOUTS	FLIPCHART MATERIALS
1. Introduction	5 min.		
2. Written Evaluation	30 min.	19-1: Evaluation Form	
3. Oral Feedback	20/30 min.		
4. Closure			

Previous Page Blank

SESSION 19: Workshop Evaluation

Total Time: 1 hour

OBJECTIVES

- To fill out the workshop evaluation questionnaire
- To provide oral feedback to the trainers on the workshop

OVERVIEW

It is assumed that the trainer will be able to evaluate the workshop in a variety of ways, formally and informally. Each session contains objectives which are generally verifiable by observation: skills can be either demonstrated or not. It is also assumed that the recipients of this training are well motivated adults who will seek help if they don't understand something. The ultimate evaluation measure, however, will be demonstrated long after the workshop when the participant develops his/her own spring capping project. If the training has been successful, the participant will be able to apply his/her knowledge and skills learned in the workshop to promote a project which is technically and socially sound.

This evaluation session provides one additional source of data. It is based upon the participants' feelings and observations about the workshop. The information gained from this session can be used to both improve the training design and help the trainer do a better job next time in conducting this workshop. This session uses two tools, a written opinionnaire and an informal oral feedback session. The written portion provides a record for the trainer. It is intended to be done anonymously to ensure more open feedback. The oral portion is designed to gather information about the workshop which will help explain and interpret the written data and provide the opportunity for give and take between the trainers and the participants.

PROCEDURES

1. Introduction — Time: 5 minutes

Introduce the evaluation session by explaining that the evaluation is important to the trainers as a way of learning how the training has been received and for future learning purposes. Describe the two parts of the evaluation (written and oral) and the time constraints.

2. Written Evaluation — Time: 30 minutes

Distribute Handout 19-1: The Evaluation Form and answer any questions about the instructions on the form. Then give the group 30 minutes to fill it out.

Previous Page Blank

3. Oral Feedback Time: 20/30 minutes

Write on the flipchart a two column divided space as follows:

Workshop Strengths	Constructive Suggestions for Improvement

Ask the group to volunteer comments on both sides of the question. Record the comments as they are given. At each comment, it is good to verify the comment with others in the group to see if the comment is shared by others or is only one person's opinion. It is particularly important that the trainer not act defensively and spend a lot of time explaining weaknesses. This will only serve to discourage constructive feedback.

4. Closure

When the group has discussed its feedback sufficiently, close the session by acknowledging all of the good ideas and feedback.

Since this is the end of the workshop, some formal closing would be appropriate. Do whatever is appropriate locally to close the workshop. Be sure to thank the trainees for their hard work and to express your appreciation.

MATERIALS

Handout:

19-1: Evaluation Form—Spring Capping

EVALUATION FORM-SPRING CAPPING

(Please do not sign your name)

A. Goal Attainment: Please circle the appropriate number to indicate the degree to which the workshop goals have been achieved.

At the end of this workshop trainees will be able to:

- Identify resources necessary to complete a village spring capping project.

  1 Low 2 3 4 5 High

- Communicate with village leaders and promote activities needed for project implementation.

  1 Low 2 3 4 5 High

- Identify and apply strategies for involving the community in spring capping activities.

  1 Low 2 3 4 5 High

- Survey and evaluate sites for potential spring capping.

  1 Low 2 3 4 5 High

- Communicate and apply relevant theories about water and its relationship to environment and health.

  1 Low 2 3 4 5 High

- Develop and implement work plans and logistics necessary for project start-up.

  1 Low 2 3 4 5 High

- Coordinate and supervise work force and delivery of materials.

  1 Low 2 3 4 5 High

- Design and build a retaining wall for capping springs.

1	2	3	4	5
Low				High

- Describe three alternative spring capping systems: the spring box, seepage collection and storage tank systems.

1	2	3	4	5
Low				High

- Use, maintain, troubleshoot, and repair retaining wall spring capping system.

1	2	3	4	5
Low				High

- Identify strategies for solving the most common problems which develop while building spring capping retaining walls.

1	2	3	4	5
Low				High

- Evaluate the spring capping project and document and record information gathered for future use.

1	2	3	4	5
Low				High

- Develop action plans for implementing spring capping projects in their regular work environments.

1	2	3	4	5
Low				High

B. Workshop Feedback and Learning: Please answer the following questions as fully as possible so that the trainers can learn how effective the workshop methodology was.

1. What have been the most positive things about this workshop? Comments:

2. What have been the most negative things about this workshop? Comments:

3. What one thing stands out as important to you in this workshop? Comments:

4. What things have you learned that you did not know before? Comments:

C. Workshop Organization and Training

1. What comments do you have about the way the workshop was planned and organized?

2. What comments do you have about the amount of time spent in the classroom compared to the amount of time spent in the field?

3. What can be done in the future to improve a workshop like this?

4. What specific steps in developing a spring capping project do you feel you will need to learn more about in order to successfully promote and develop such a project in the future?

5. What comments do you have about the trainers?

SYNOPSIS

SESSION 20: MID-POINT WORKSHOP EVALUATION AND REVIEW
(Optional)

Total Time: 75 minutes

PROCEDURES	TIME	HANDOUTS	FLIPCHART MATERIALS
1. Introduction	5 min.		Session Objectives
2. Group Review	15 min.		
3. Individual Task	15 min.	19-1: Evaluation Form	
4. Break	15 min.		Evaluation Results
5. Group Discussion	20 min.		
6. Closure	5 min.		

Previous Page Blank

SESSION 20: Mid-Point Workshop Evaluation and Review

Optional Session

Total Time: 90 minutes

OBJECTIVES

By the end of this session, the participants will have:

- Reviewed the session objectives from the sessions completed
- Filled out the workshop evaluation
- Discussed problems encountered during the first half of the workshop and made suggestions on how they can be resolved

OVERVIEW

The mid-point evaluation has two purposes. The first is to give participants an opportunity to review what they have learned to date in the workshop. The second is to give trainers information about how the participants are reacting to the workshop. The questionnaire, which participants fill out anonymously, should indicate if any modifications need to be made by the trainers during the second half of the workshop. For example, if a sufficient number of participants feel uncertain about topics or skills covered in a specific session, an evening review session could be planned.

Individuals should be encouraged to approach the trainers about any area of confusion.

(Note to Trainer: In this course the trainer can choose from two types of mid-course review. This session is the more comprehensive, covering an evaluation form and requiring one hour and fifteen minutes to complete. The other alternative is located in Session 8: Constructing the Foundation, Procedure 6, Checking for Skill-Level Progress. This alternative method for mid-course review uses the task analyses as a way of looking at skill development progress and requires only 30 minutes. The trainer could use one or both methods of mid-course review. However, it is important that some type of mid-course check be conducted.)

PROCEDURES

1. Introduction — Time: 5 minutes

Introduce the mid-point evaluation by explaining to participants that this is an opportunity to review what we have accomplished in the workshop so far, to

Previous Page Blank

identify any information that needs to be clarified or skills that need further practice, and to find out in general how participants are feeling about the workshop.

2. Large Group Review — Time: 15 minutes

Post the session objectives from all past sessions and briefly review for participants the major activities covered in each session. Make reference to the project cycle chart and where each session fits.

3. Individual Task: Mid-Point Evaluation Form — Time: 15 minutes

Pass out the Mid-Point Evaluation Form to all participants and ask them to fill it out. Encourage honest responses. Tell them not to write their names on the form. Give them 15 minutes to complete it.

4. Break — Time: 15 minutes

As the participants finish the evaluation and during a break, do a quick compilation of the answers and write them on flipchart paper under the following headings:

- Major areas of successful learning
- Sessions or learning objectives where there are problems
- General problems with workshop
- Ideas for improvement

5. Large Group Discussion: Evaluation Results — Time: 20 minutes

Go over the compilation of the evaluation responses with the participants clarifying the responses when necessary. Make some general observations about the responses, i.e., "It seems that most of you found Session 7 to be particularly useful and at least half of you did not see Session 4 as being applicable to your work." Lead a discussion by asking the following questions:

- What do the evaluation responses say about how we should proceed?
- Who agrees/disagrees with the ideas for resolution of workshop problems? Why? What alternatives do we have?

The discussion should end with agreements between trainers and participants about any modifications that need to be made in the next half of the workshop.

6. Closure Time: 5 minutes

Encourage participants to continue to voice their ideas and reactions to the workshop. Invite individuals who feel a need to clarify a particular topic covered or to follow up a session in any way, to see the trainers.

MATERIALS

Flipcharts for:

Session objectives
Compiling evaluation results

Handout:

19-1: Mid-Point Evaluation Form—Spring Capping

SUPPLEMENT

FOR

SPRING BOX TRAINING

Previous Page Blank

TABLE OF CONTENTS

Chapter Page

1. INTRODUCTION TO THE SUPPLEMENT..... 311

1.1 Needs Addressed by the Training Supplement..... 311

1.2 Overall Goals..... 311
1.3 Trainers..... 311
1.4 Approach to Training with this Supplement..... 311
1.5 Organization of the Supplement..... 311
1.6 Workshop Content and Methodology..... 312
1.7 Planning for the Training Program..... 312
1.8 Task Analysis..... 312
1.9 Workshop Schedule..... 312

2. SUPPLEMENTS TO THE TRAINING SESSIONS..... 313

Session 1: Introduction to Spring Development Workshop.... 313
Session 2: Introduction to Spring Development..... 313
Session 3: Skills Assessment for Spring Development Technologies..... 313
Session 4: Village Survey Methods and Data Collection for Spring Site Selection..... 313
Session 5: Preparation for Spring Development Construction Activities..... 314
Session 6: Layout and Excavation..... 317
Session 7: Form Building and Reinforcement..... 317
Session 8: Constructing the Foundation..... 321
Session 9: Installation of Spring Box Walls and Pipe..... 321
Session 10: Community Selection and Decision-Making..... 322
Session 11: Community Involvement: Organizing the Community to Participate..... 322
Session 12: Operation, Maintenance, and Repair..... 322
Session 13: Education for Spring Users..... 324
Session 14: Spring Site Completion..... 324
Session 15: Planning for Spring Capping Projects..... 324
Session 16: Evaluating the Demonstration Spring Capping Project..... 324
Session 17: Alternative Spring Development Technologies.... 324
Session 18: Planning for Your First Spring Capping Project. 324
Session 19: Workshop Evaluation..... 324
Session 20: Mid-Point Workshop Evaluation and Review (Optional)..... 324

Previous Page Blank

NEW HANDOUTS

		Page
1-1/S:	Overall Course Goals	327
1-2/S:	Schedule of Activities	329
4-1/S:	Lecturette Notes: Spring Site Selection	331
5-2/S:	Spring Box Structure I	333
5-3/S:	Spring Box Structure II	335
5-4/S:	Reinforcement for Spring Box Foundation and Cover	337
5-6/S:	Quantities of Materials Required for an Average Sized Spring Box Structure	339
6-1/S:	Drainage Canals	341
7-1/S:	Wooden Forms for Spring Box Foundation	343
9-1/S:	Lecturette Notes: Building Spring Box Walls	345
19-1/S:	Evaluation Form -- Spring Box Workshop	347

1. INTRODUCTION TO THE SUPPLEMENT

1.1 Needs Addressed by the Training Supplement

The purpose of this training supplement is to adapt the basic workshop on spring retaining walls to the alternative spring box design. With this supplement the trainer can adapt the basic training guide on a session-by-session basis, to training in spring box systems. Although most of the adaptations are included in this supplement, trainers may need to make some additional modifications to the basic design.

1.2 Overall Goals

The overall training goals of the supplement are the same as in the basic workshop, but the training is directed specifically at the spring box system.

The spring box system differs in several respects from the retaining wall system. The box system is more difficult to build, but can be inspected and cleaned more easily than the wall system. The box system, which can also be used as a holding tank to help satisfy peak water demands, should be used when a village chooses to upgrade an existing retaining wall system, or if the village survey shows that a box is a feasible alternative.

1.3 Trainers

The same two-trainer approach used in the basic workshop is suggested for this supplement.

1.4 Approach to Training with this Supplement

This supplement can be used in conjunction with the basic workshop in two ways. First, the basic workshop can be modified to teach the spring box design instead of the retaining wall design. Such a modification may be required if the village survey indicates that a spring box would be a more appropriate technology than the retaining wall design. Second, this supplement can be used to expand the basic 12-day workshop by adding 6 days of training in spring box construction. This use, however, would require significant modification of the basic workshop design, which goes beyond the adaptations included in this supplement.

1.5 Organization of the Supplement

The supplement is organized as a series of notes for each session that explain to the trainer the specific changes required for teaching the spring box design. New handouts are provided where necessary. They are identified with the letter "S" following the handout numbers (e.g. Handout 5-2/S is for the supplement and replaces regular Handout 5-2). All new handouts are included here at the end of the supplement.

1.6 Workshop Content and Methodology

The general content and methodology of the workshop for spring box training is the same as that outlined in the basic workshop.

1.7 Planning for the Training Program

Planning for training in the spring box system is the same as outlined in the basic workshop, except that more materials are likely to be needed.

Revise the quantities shown in the basic workshop as follows for a spring box.

Cement	15 to 20 sacks, 50 kg each
Reinforcing Bar.....	20 m 6 mm steel reinforcing bar
Sand.....	1.5 to 2 cubic meters
Broken stone (1 cm diam)...	1.5 to 2 cubic meters
Pipe and appurtenances.....	50 mm diam. galvanized iron pipe - 1 m threaded one end (intake pipe) - 0.7 m threaded one end (drain pipe) - 0.5 m plain ends (outlet pipe) - Intake screen with flanged connections - Plug for drain pipe

Adapting the Session Sequence. In Section 1.7.6. of the basic workshop, there are suggestions for adapting the session sequence for participants with particular job responsibilities. Spring box training can be adapted in the same way, after making the modifications to each session as described in the supplement.

1.8 Task Analysis

The task analysis for spring boxes is similar to that presented in the basic workshop for retaining walls.

1.9 Workshop Schedule

The length of each session for spring box training should be essentially the same as the length shown in the basic workshop. Sessions 6 to 9 may require one or two additional hours each to provide for handling the greater amount of stone, mortar, and concrete inherent in the spring box design.

2. SUPPLEMENTS TO THE TRAINING SESSIONS

SESSION 1: INTRODUCTION TO SPRING DEVELOPMENT WORKSHOP

No changes in procedures.

NEW HANDOUTS

Handout 1-1/S: Overall Course Goals
Handout 1-2/S: Schedule of Activities

SESSION 2: INTRODUCTION TO SPRING DEVELOPMENT

No changes in procedures or handouts.

SESSION 3: SKILLS ASSESSMENT FOR SPRING DEVELOPMENT TECHNOLOGIES

No changes in procedures or handouts.

SESSION 4: VILLAGE SURVEY METHODS AND DATA COLLECTION FOR SPRING SITE SELECTION

Changes in Procedures: Expand the 10-minute lecturette/discussion in Step 2 to 15 minutes by adding the following material.

6. How do retaining wall and spring box systems differ, and what are their advantages and disadvantages?

The spring box differs from the retaining wall in the following respects:

- In the retaining wall system the groundwater source (spring) is connected directly to the outlet pipe from which the water is taken.

- The spring box includes a retaining wall, but it adds a small tank (the box) between the groundwater source and the outlet pipe. The spring water flows from the ground into the box, then out the box through the outlet pipe.

- The spring box creates a tank in which a volume of spring flow is stored and in which some soil washed from the spring can settle.

The spring box has the following advantages over the retaining wall:

- It stores some spring flow, acting as a small reservoir.

- It allows sedimentation to occur ahead of the pipe, thus providing clearer water.

- The box is readily accessible for maintenance.

NEW HANDOUTS

HANDOUT 4-1/S: Lecturette Notes: Spring Site Selection

SESSION 5: PREPARATION FOR SPRING DEVELOPMENT CONSTRUCTION ACTIVITIES

New Overview

Learning how to implement a spring development project is best accomplished by working on an actual project. Therefore, this course involves working on a spring capping training project, of which the construction stages will begin tomorrow. This session is intended to: 1) familiarize the participants with the spring project selected for this training; and 2) involve the participants in the appropriate planning and design steps necessary before construction begins.

The trainees will visit the project site and participate in the pre-construction planning activities such as 1) estimating and completing a preliminary design of the spring box, 2) choosing the proper location of the structure and 3) planning for other resources and improvements that are included in this project.

Changes in Procedures: Steps not listed here remain unchanged.

3. Group Familiarization with this Project:
Substitute the following:

If the participants have visited the spring that will be developed in this training project, ask them to describe the spring as they remember it. Using a flipchart explain that the decision has been made to improve this spring in the following ways:

- Construct a spring box to capture the spring flow for convenient usage.

- Protect the spring from contamination.

- Place a pipe which will allow for convenient water collection in carrying vessels.

- Construct a concrete box cover to protect the spring from contamination.

Using a flipchart, explain the criteria that were used to make the decisions about the spring improvements.

- The spring structure should not be too difficult to build.
- The structure should be constructed of locally available materials.
- A labor force with the necessary skills should be available locally.
- The structure should adequately handle the flow of the spring all year round.
- The improved spring should benefit users.
- The structure should not be too expensive; the community should be able to afford it.
- The community should be in agreement with the plans.

Distribute Handout 5-1: Photographs of Stages of Spring Development

Distribute Handout 5-2/S: Spring Box Structure I. Explain the drawing. In addition, distribute (or draw on a flipchart) a map of the spring site, pointing out key features.

4. Introduction of Planning Steps: Change the word retaining wall to spring box.

5. Lecturette/Discussion on Spring Box Designs: Substitute the following material for Step 5.

Ask the group to refer to Handout 5-2/S showing a drawing of a spring box and its foundation. Check to see if they understand each part of the structure.

Explain the basic dimensions for the foundation and spring box. Define the three terms: height, length, and width. Explain that the foundation is also slightly longer and wider all around to support the retaining wall and box and simplify construction.

Explain the following considerations in establishing the volume of the box.

- For access in cleaning, the box must have minimum dimensions of 80 cm x 80 cm and 80 cm high.

- The box can be larger if more storage volume is required.

Distribute Handout 5-3/S: Spring Box Structure II

Explain to the participants that you are now going to give them a minimum dimension for a spring box. This is the smallest structure that you would ever design. It could handle average flow rates from 50 to 100 liters-per-minute.

Given this flow rate, the minimum dimensions to use for the spring box foundation would be 15 to 20 cm high, 210 cm long and 170 cm wide. Have everyone approximate these dimensions.

The 6 mm steel reinforcement rods should be placed as shown in Handout 5-4/S: Reinforcement for Spring Box Foundation and Cover.

The discussion in Step 5 on construction materials, splash pads, and pipes should be included. Point out that pipes should be located as shown in Handout 5-2/S.

6. Preparation for Field Work: The preparation outlined in the basic workshop is the same for the spring box training, with the following exceptions:

Field Activity No. 1: Designing the Foundation and Wall Structure

The trainer should divide the group into four smaller teams. Ask two of the teams to find answers to these questions (put the questions on a flipchart):

- Where is the impermeable layer?

- How deep should the foundation be?

- Where should the foundation be placed?

- What dimensions should the foundation have?

Assign two other teams these questions:

- Where is the best point to capture the spring?

- At what height will the outlet pass through the wall?

- Where should the wall be?

- Will there be room under the outlet for a collection vessel?

7. Group Discussion on Planning for Tools and Materials: This step is the same as in the basic workshop except for a few changes in Handout 5-6/S: Quantities of Materials Required for an Average Size Spring Box.

NEW HANDOUTS

Handout 5-2/S: Spring Box Structure I
Handout 5-3/S: Spring Box Structure II
Handout 5-4/S: Reinforcement for Spring Box Foundation and Cover
Handout 5-6/S: Quantities of Materials Required for an Average Sized Spring Box Structure

SESSION 6: LAYOUT AND EXCAVATION

No changes in procedures.

This layout and excavation session does not change, because the spring box is constructed as a foundation and retaining wall first; then a box is added on the spring outlet end. The size of the excavation is slightly larger for the spring box, so a full day session should be expected.

NEW HANDOUTS

Handout 6-1/S: Drainage Canals

SESSION 7: FORM BUILDING AND REINFORCEMENT

Changes in Procedures: The key changes in the procedures are as follows:

- More intricate and larger forms for the spring box foundation must be constructed.
- Forms for a cover for the spring box, instead of a laundry pad, are constructed.

Changes in specific field work procedures are noted below; otherwise the session remains unchanged.

3. Lecturette on Layout and Setting up Forms for the Foundation

This step is the same as in the basic workshop except for Handout 7-1/S: Wooden Forms for Spring Box Foundation.

4. Preparation for Field Work

Prepare the trainees for the day's field work. Explain that two forms will be constructed: 1) the foundation for the spring box along with a splash pad for the outlet pipe and 2)

the cover for the spring box.

Today the participants will do the layout and build the forms; tomorrow they will mix and pour the concrete.

The trainees will be assigned to two work groups for the field work. Each work group should develop a work plan for its structure and divide the work accordingly.

The foundation and cover for the box and the splash pad will be necessary for the spring improvement. These three different structures will provide the workshop participants with ample practice experience to build their skills.

Field Activity No. 1: The trainees will prepare a solid impermeable location for the foundation. Two of the work groups will prepare the spring box foundation area and the other two groups will prepare the area on which to cast the box cover.

Field Activity No. 2: The work groups will decide where to put the structures, sizing them to adequate height, length, and width.

Field Activity No. 3: The work groups will build the forms for their structure.

Field Activity No. 4: The work groups will place the appropriate reinforcement materials for their concrete structure.

Assign the work teams. Explain that today the field activities will center around the layout and form building for two structures: the foundation for the spring box wall and the box cover itself. The activities will be occurring simultaneously; two of the work groups will work on one structure and two on another.

5. Field Work Time: 4 hours

Field Activity No. 1: Preparing a Solid Impermeable Layer for the Foundation and Preparing a Work Area to Build the Cover

Have two of the work groups prepare the foundation area for the spring wall and the other two prepare the area on which to build the cover.

Foundation Work Groups

Refer the groups that will work on the foundation to the dimensions of their structure. Guide them through the necessary steps -- finding an impermeable layer and leveling

so the weight can be evenly distributed. Also help them determine the depth to which they should dig.

Explain that they should make a reasonable attempt to reach an impermeable/stable layer; however, go down no more than 1 meter. If no solid layer is reached, create a solid one by adding a layer of broken stone and gravel.

Cover Work Groups

Refer the groups that will work on casting the concrete box cover to Handouts 5-2/S, 5-3/S and 5-4/S: Spring Box Structure I and II and Reinforcement for Spring Box Foundation and Cover which show the cover dimensions and reinforcing. (If a large enough piece of slate is available, a slate cover is a good alternative to a concrete cover.) The objective in preparing the work area for the cover is to make a stable, level, and smooth surface in a location that is not in a heavily travelled area. The location should be close to the tank, because the cover will be heavy. The form for the cover will be built on the work surface. In later sessions, the concrete will be placed and cured. After the concrete has cured for two weeks, the forms will be removed and the cover will be lifted and placed on the top of the spring box.

Explain that the groups should prepare the ground surface for casting the cover. The finished ground surface should be covered with sheet plastic, heavy paper, or wood so the concrete is not poured directly on the soil.

After the groups have completed their respective tasks, have all participants view and discuss each project. Ask a member from each work group to explain and report on its work.

Field Activity No. 2: Locating and Sizing the Forms:

Ask each of the two project groups to determine the depth and other dimensions of their structures. The group working on the spring box structure should refer to the decisions they made during the planning session, or during the workshop lecturette. The group on the box cover should determine the cover dimensions from Handout 3-5/S. The cover must obviously fit the spring box and any adjustments in the dimensions should be coordinated among the groups.

Explain and demonstrate how to figure out what the depth of the box should be. Three factors must be taken into consideration: how much support the walls will require, how far into the ground one must excavate to get a proper footing into the impermeable layer, and how high the foundation must be in relationship to the water.

Explain and demonstrate that the height or top of the

foundation should be 15 to 20 cm below the excavated spring level.

Explain and demonstrate how the foundation is keyed into the ground by support from the undisturbed earth sides of the excavation.

In climates without freezing conditions, and where stable soil rock is encountered, the following general guide can be used for small spring retaining walls.

Total Height of Wall(m)	Thickness of Wall(cm)	Depth of Foundation(cm)
0.5	30	20
0.5 to 1.0	45	25
1.0 to 1.5	60	30

Refer to Handout 5-3/S for a picture showing the wall dimensions.

NEW HANDOUTS

Handout 7-1/S: Wooden Forms for Spring Box Foundation

SESSION 8: CONSTRUCTING THE FOUNDATION

No changes in procedures or handouts.

SESSION 9: INSTALLATION OF SPRING BOX WALLS AND PIPE

Changes in Procedures: Generally the procedures are the same as in the basic workshop. The construction is performed by building a retaining wall with a box wall structure in front as shown in Handout 5-3/S. Specific changes are identified below.

2. Lecturette/Discussion on Building Spring Box Walls and Associated Piping

This lecturette/discussion is the same, except that the service pipe locations are as follow:

Follow these steps in laying the service pipes:

- Lay the "plugged" pipe at the lowest level possible in the box wall so it can be opened to drain the box.
- The diameter(s) of the service pipe(s) and intake screen must be adequate to carry the spring flow. This can be determined by referring to the table in Handout 9-1/S: Lecturette Notes: Building Spring Box Walls.
- If pipe must be ordered in advance, measure the spring flow and use the table in Handout 9-1/S to determine the number and diameter(s) of service pipe(s) required.
- The intake and outlet pipes should be placed just at or below the level of the lowest annual point of emergence of the spring.
- The outlet pipes should extend far enough out of the box to permit convenient collection of water into a vessel, without being long enough to risk damage from hanging buckets or children hanging or swinging on the pipe(s). Stresses like these could cause the pipe to break out of the wall. All pipes should tilt slightly downward so that the downstream end is lower than the upstream.

3. Field Activity No 3: Building Spring Box Walls

Begin building the spring box walls. Have the group inspect the rocks to make certain they are clean. Demonstrate how to position the rocks (they must be wet) and apply the mortar around them. Show how rocks are positioned to best resist the pressure from the water. Have one group select and wet the rocks, while another positions the rocks and applies the

mortar. Rotate the teams working on the retaining wall and box portions frequently enough for everyone to get practice.

Stop the spring box construction at the appropriate time for laying the service pipes. Demonstrate or have a work team demonstrate how the pipes should be laid, covering all the points included in the lecturette. Demonstrate how to seal the pipe through the wall to the mortar mixture by lightly roughening the pipe surface so the mortar can adhere to the pipe tightly.

Have the group determine how high the wall should be, using the directions from the lecturette.

If the structure is not finished when the field work time is up, have the group return to the workshop and allow the labor force to complete the structure.

NEW HANDOUTS

Handout 9-1/S: Lecturette Notes: Building Spring Box Walls

SESSION 10: COMMUNITY SELECTION AND DECISION-MAKING

No changes in procedures or handouts.

SESSION 11: COMMUNITY INVOLVEMENT; ORGANIZING THE COMMUNITY TO PARTICIPATE

No changes in procedures or handouts.

SESSION 12: OPERATION, MAINTENANCE AND REPAIR

Changes in Procedures: All the material in the basic workshop for retaining walls applies to spring boxes. However, spring boxes have certain additional maintenance requirements. Therefore, add to the Lecturette on Maintenance Procedures in Step 4 the following discussion.

Additional Maintenance Requirements for Spring Boxes

In addition to the maintenance requirements listed for retaining walls there are special requirements for spring boxes, as follows:

- Check the cover daily to make sure it has not been dislodged. Ideally the cover should be locked.
- If the cover has been moved, check the interior of the box for contamination.
- Check the interior of the box at least weekly.
- If sediment has accumulated to a significant depth in the box, drain the box and remove the sediment.
- Disinfect the box after each cleaning.

SESSION 13: EDUCATION FOR SPRING USERS

No changes in procedures or handouts.

SESSION 14: SPRING SITE COMPLETION

Changes in Procedures: Add to the Lecturette on Spring Cap Closure Activities in Step 2 a short description of the procedure for mounting the cover on the spring box.

The cover should not be moved for at least two weeks: therefore, it must be mounted by the local laborers after the workshop. If a slate cover is used, it can be mounted on the tank during the workshop.

After two weeks, the forms for the cover should be carefully removed. the cover will weigh about 250-kg, so four able-bodied people will be needed to lift it. Lifting and moving must be done with extreme care to avoid unusual stress on the cover, which could break it.

No changes in handouts.

SESSION 15: PLANNING FOR SPRING CAPPING PROJECTS

No changes in procedures or handouts.

SESSION 16: EVALUATING THE DEMONSTRATION SPRING CAPPING PROJECT

No changes in procedures or handouts

SESSION 17: ALTERNATIVE SPRING DEVELOPMENT TECHNOLOGIES

Changes in Procedures: This session will have to be modified to include those technologies that the trainees have not worked on during the workshop. The trainers will have to include information on retaining wall systems found in the basic workshop and delete the information on spring box systems.

No changes in handouts.

SESSION 18: PLANNING FOR YOUR FIRST SPRING CAPPING PROJECT

No changes in procedures or handouts.

SESSION 19: WORKSHOP EVALUATION

No changes in procedures.

NEW HANDOUTS

If the spring box workshop is conducted in place of the retaining wall workshop, use Handout 19-1/S: Evaluation Form -- Spring Box Workshop.

SESSION 20: MID-POINT WORKSHOP EVALUATION AND REVIEW

No changes in procedures or handouts.

OVERALL COURSE GOALS

At the end of this workshop, trainees will be able to --

- Identify resources necessary to complete a village spring capping project.
- Communicate with village leaders and promote activities needed for project implementation.
- Identify and apply strategies for involving the community in spring capping activities.
- Survey and evaluate sites for potential spring capping.
- Communicate and apply relevant theories about water and its relationship to environment and health.
- Develop and implement work plans and logistics necessary for project start up.
- Coordinate and supervise the work force and delivery of materials.
- Design and build a spring box for capping springs.
- Describe two alternative spring capping systems: seepage collection and storage tank systems.
- Operate, maintain, troubleshoot, and repair spring box spring capping systems.
- Identify strategies for solving the most common problems which develop while building spring boxes.
- Evaluate a spring capping project and document and record information gathered for future use.
- Develop action plans for implementing spring capping projects in their regular work environment.

Previous Page Blank

SCHEDULE OF ACTIVITIES

Day 1	Day 2	Day 3	Day 4	Day 5	Day 6
• Workshop Introduction	• Skills Assessment for Spring Development Technologies	• Preparation for Construction Activities	Construction Activities		
			• Layout and Excavation	• Form Building and Reinforcement	• Constructing the Foundation
• Introduction to Spring Development	• Survey Methods and Data Collection				

Day 7	Day 8	Day 9	Day 10	Day 11	Day 12
• Installation of Spring Box System	• Community Selection and Decision Making	• Operation, Maintenance and Repair	• Spring Site Completion	• Project Evaluation	• Planning Your First Spring Capping Project
	• Community Involvement: Organizing the Community to Participate	• Health Education for Spring Users	• Planning for Spring Capping Projects	• Alternative Spring Development Technologies	• Workshop Evaluation
					• Closure

Handout 1-2/S

Previous Page Blank

Lecturette Notes: Spring Site Selection

Review the five criteria used for selecting or evaluating a spring for possible spring capping.

1. Is the flow adequate? The spring has an adequate flow if it can provide enough water for at least the daily drinking water needs of the user group or village. Steps for determining this are to measure the flow of the spring to arrive at the total volume produced in 8 to 12 hours and divide this by the number of people to be served by the spring. By measuring the flow you obtain the number of liters available for use per person per day. Then compare this amount to the minimum standard of 15 liters per person per day to determine if the spring flow is adequate or not.

2. Is the spring flow reliable? A spring flow is reliable only if it has been constant and adequate through both we and dry seasons for many years.

3. Is the water safe to drink? Remember that spring water is often the best quality nature has to offer. It is continuously flowing from a source underground which has been purified by slowly filtering through and layers of soil many meters deep. However, it must be uncontaminated by pit latrines and other sources of human waste, livestock, fish ponds, food processing (for example cassava soaking and fermentation), bathing, washing, surface water runoff, and flooding.

4. Is the water convenient and accessible to the users? A spring should be as close to the users as possible to minimize the daily work required to collect and haul water. Difficult and hazardous crossings should be avoided. (For example, roads or log bridges or infested waters.)

5. Is the spring site technically feasible...can the spring be capped?

   In determining if a spring is technically feasible for capping, there are several factors to be considered:

   - A spring should have an adequate slope for proper drainage.
   - It should have protection from flooding and diversion of watershed runoff.
   - The slope should be steep enough so that a collection vessel can be placed underneath the discharge pipe.
   - Labor and materials such as gravel, rock, sand, and clay should be locally available.

Previous Page Blank

- There should be a solid footing on impermeable ground for the structure.

6. Spring Capping Technique

Review the differences and advantages of using a spring box system, as opposed to a retaining wall:

- The retaining wall system provides a direct connection between the groundwater source (spring) and the outlet pipe from which water is taken.

- The spring box includes a retaining wall, but it adds a small tank (the box) between the groundwater source and the outlet pipe. Spring water flows from the ground into the box, then out the box through the outlet pipe.

- The spring box creates a tank in which a volume of spring flow is stored and in which some settling of soil washed from the spring can settle.

- The spring box has the following advantages over a retaining wall:

    - It stores some spring flow, acting as a small reservoir.

    - It allows sedimentation to occur ahead of the pipe, thus providing cleaner water.

    - The box is readily accessible for maintenance.

SPRING BOX STRUCTURE I

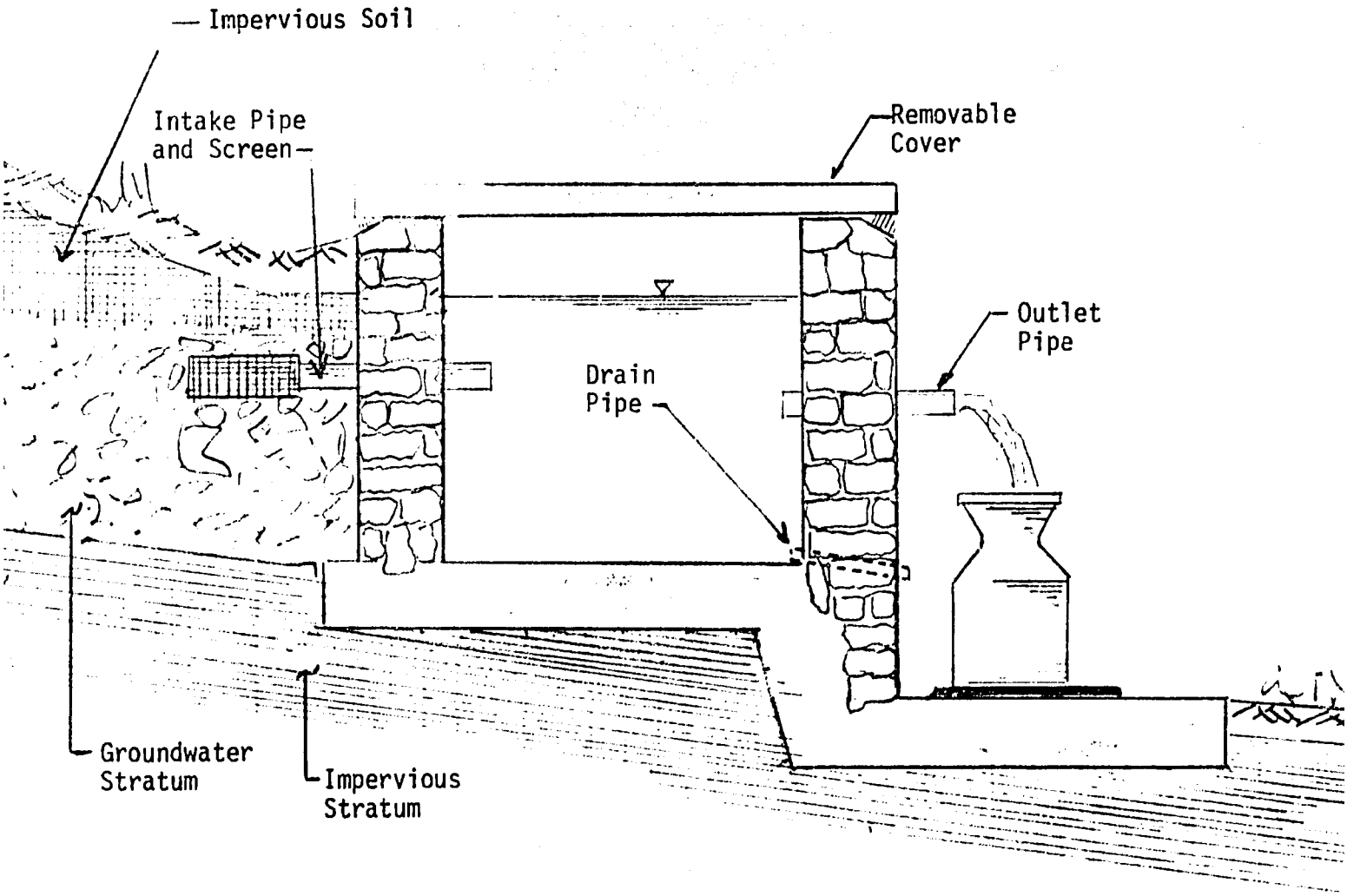

SPRING BOX STRUCTURE II

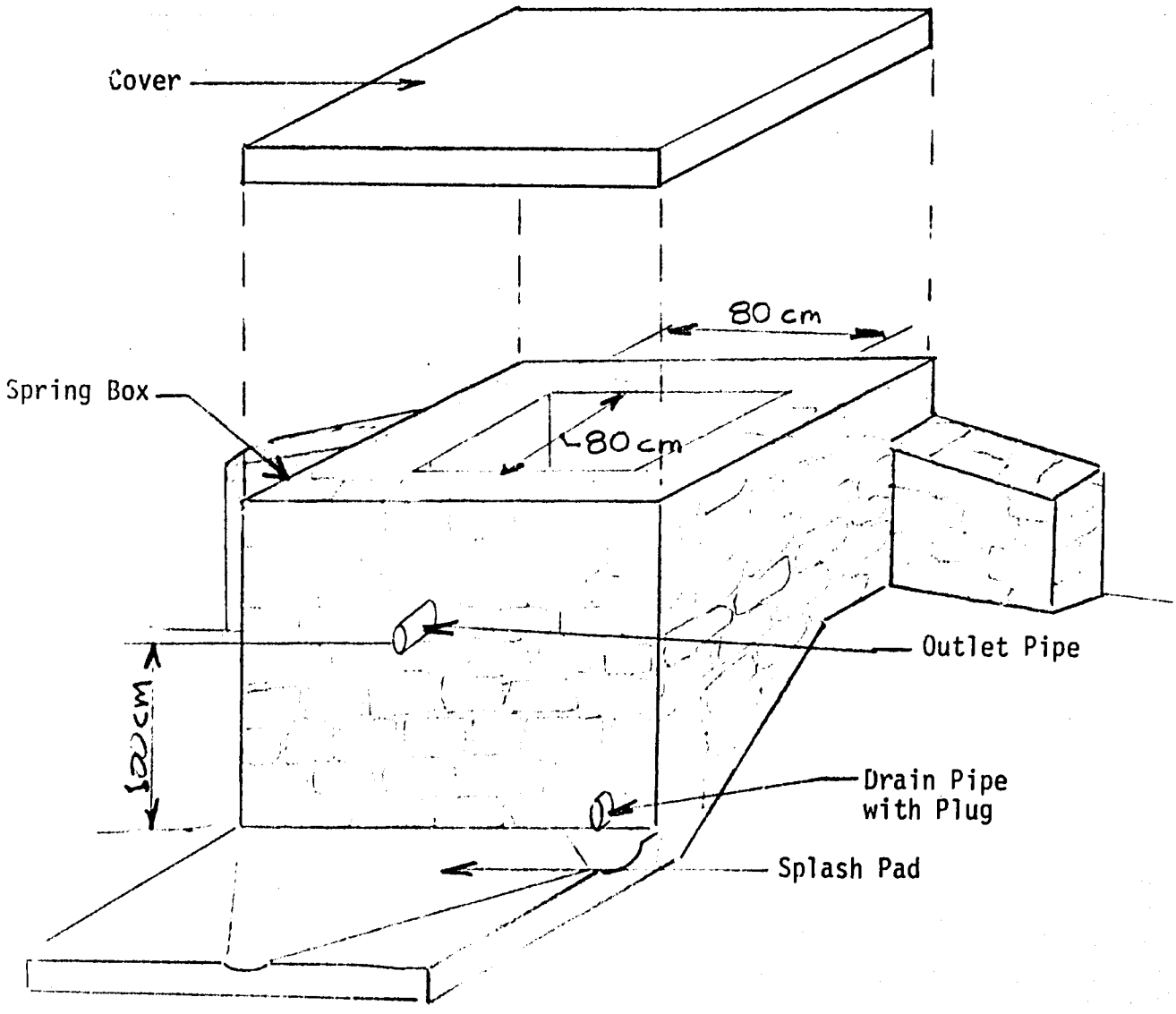

Previous Page Blank

REINFORCEMENT FOR SPRING BOX FOUNDATION AND COVER

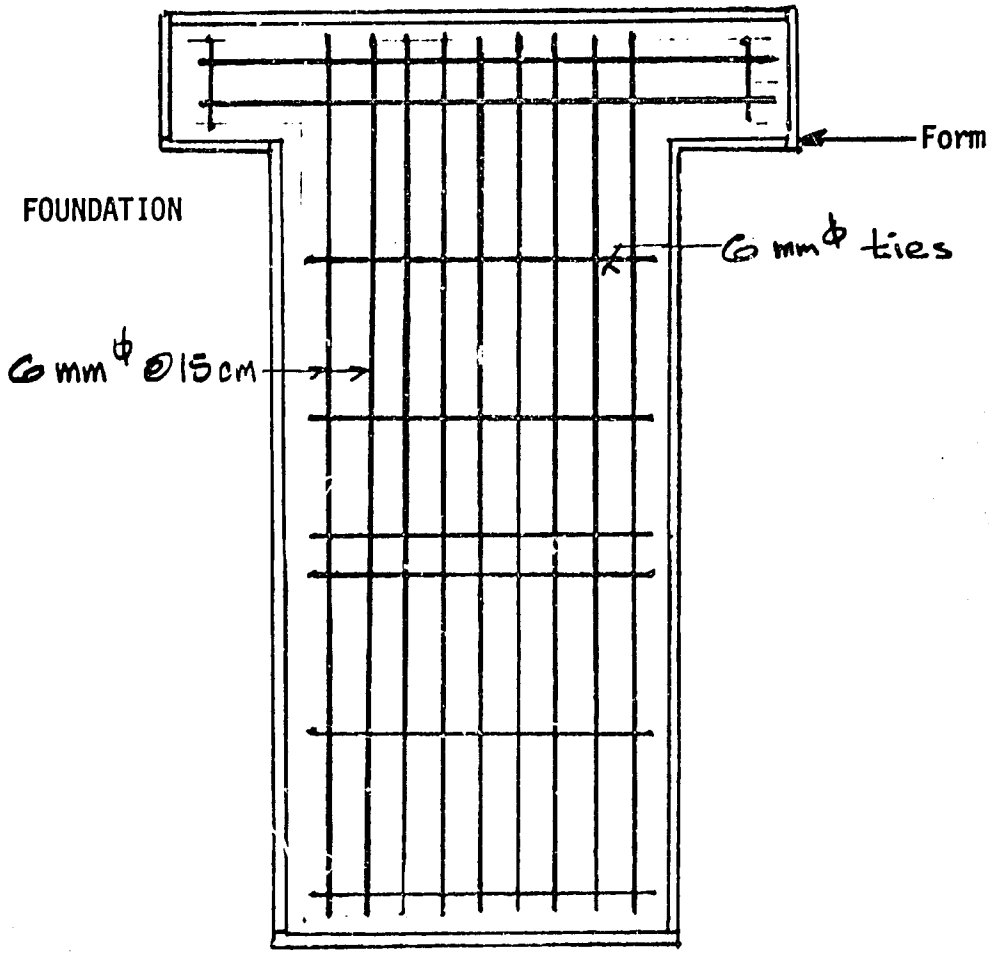

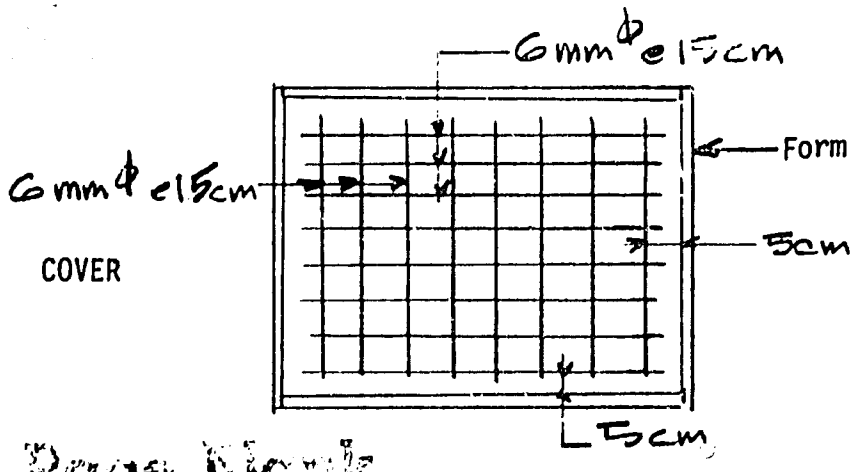

Previous Page Blank

QUANTITIES OF MATERIALS REQUIRED FOR AN AVERAGE SIZED SPRING BOX STRUCTURE

Supplies

Cement	15-20 sacks, 50 kg, top grade, dry and powdery
Sand, clean (uniform)	1.5-2 cubic meters
Broken stone (1 cm diameter)	1.5-2 cubic meters
Rock, clean	1-3 cubic meters
Reinforcement rods (rebar)	20 m, 6 mm diameter
Wrapping wire	5-10 meters of 3 or 5 mm flexible wrapping wire
Pipe and appurtenances	50 mm diameter galvanized iron pipe -1 m threaded one end (intake pipe) -0.7 m threaded one end (drain pipe) -0.5 m plain ends (outlet pipe)
Intake screen with flanged connections	
Plug for drain pipe	
Plastic	1 roll of thick plastic sheeting, 1 m wide x 5 m long
Chlorine bleach	2 gal. or 10 liters
Sturdy rope or cord	1 roll 1-2 cm
Clay	Locate a source for good quality clay as close to the site as possible.
Wood for forms and mixing board	Locally available lumber

Previous Page Blank

Labor

1-2 masons

3-5 laborers

Tools

2 spades for digging

1 rake

trowels (1 for every 2 participants)

3 wooden paddles

1 pick axe

1 crowbar

2 saws for cutting forms

1 hacksaw or wire snipper

2 hammers

2 boxes of flat headed nails for building forms

4 plastic buckets of known volume

1-2 wheelbarrows

1-2 measuring tapes

1 sifting screen

1 tamper/compactor

gloves

The above suggested list is, of course, based on estimates and will certainly vary depending upon the size of the spring box required. These items are usually necessary. However, they may not be readily available. Alternative materials may be substituted if necessary.

DRAINAGE CANALS

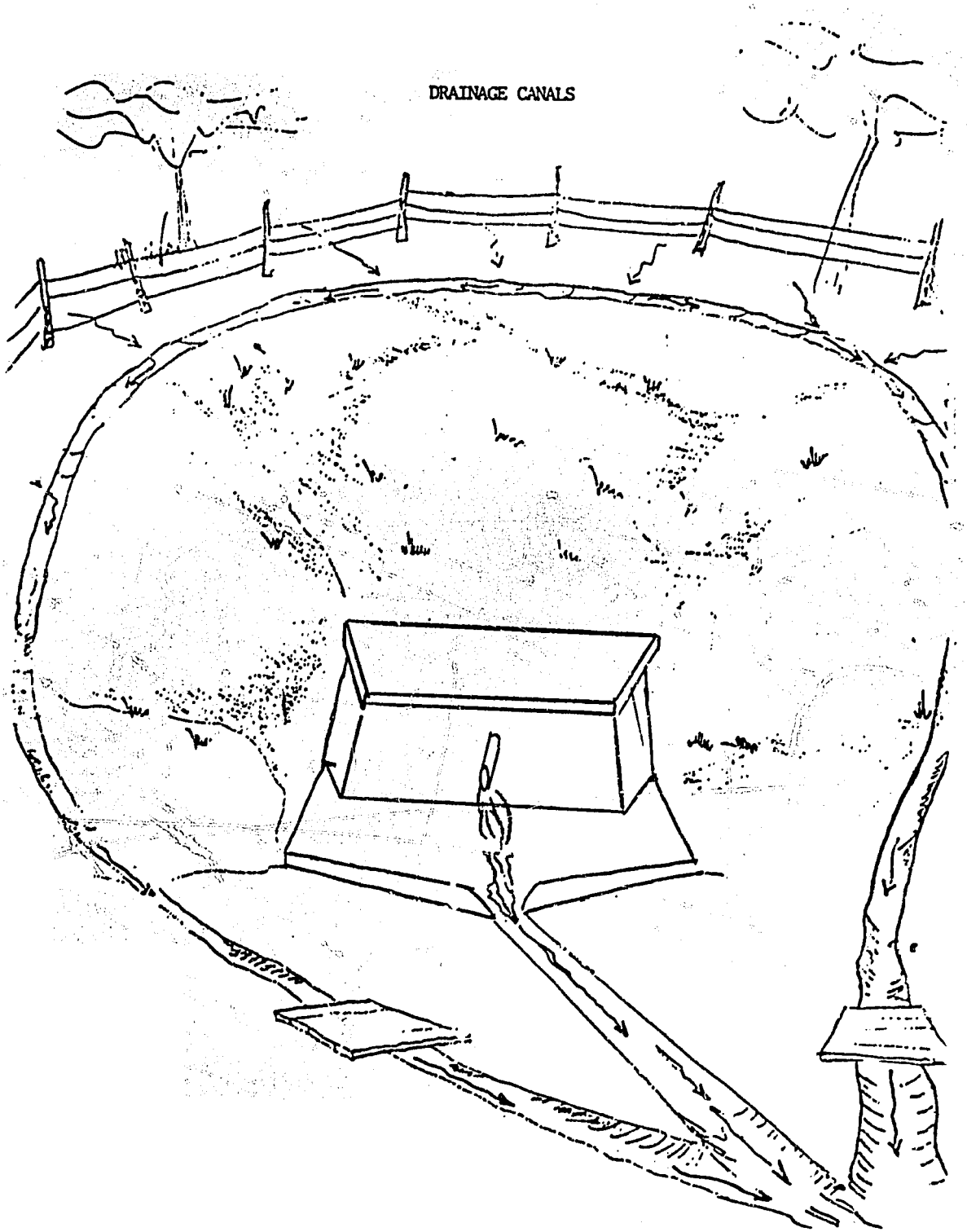

WOODEN FORMS FOR SPRING BOX FOUNDATION

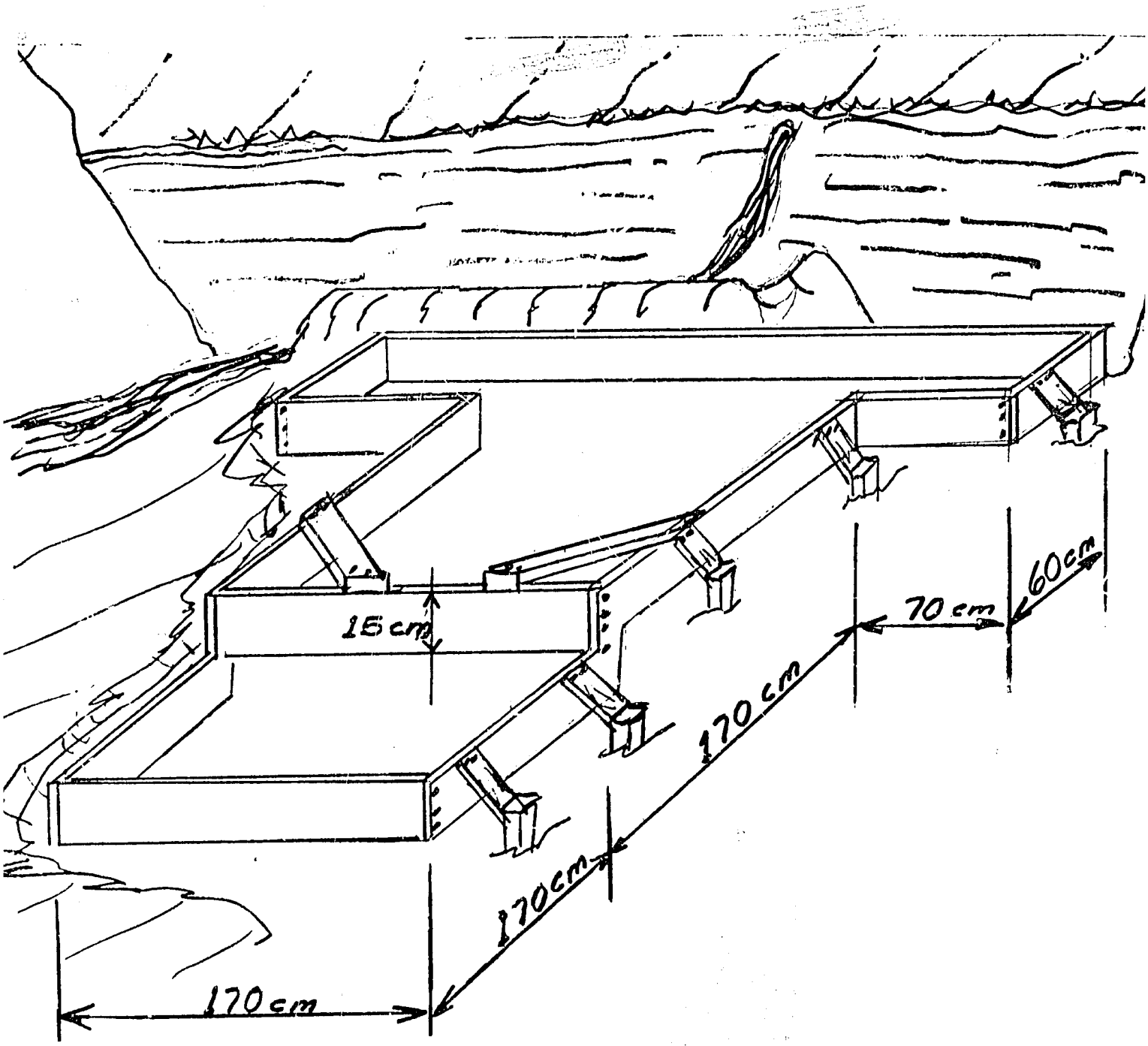

Previous Page Blank

LECTURETTE NOTES: BUILDING SPRING BOX WALLS

Rock and mortar wall construction may begin on the day following the foundation construction. The clay dam continues to pool and divert the spring flow so that it will not disturb the construction. The height(s) of the service pipes must be established so that flow from the spring will be continual during both the dry and wet periods. The pipe(s) must be firmly set in the rocks and mortar as the wall is built. Remember that the wall being built must withstand water pressure at its weakest points -- which are the bonds between the rock and the mortar. Therefore, the wall must be made with strong, dense materials which water will not penetrate, such as sound rock and mortar. Here is a series of steps to complete the task.

- Mix strong batches of mortar using one portion of cement, two portions of clean sand, and just enough water to make it workable, not too wet.

- Wet the rocks before placing and surrounding them with mortar in order to achieve the best possible bond between the rocks and mortar.

- Lay the rocks so the wall will retain water. Select rocks to lay side-by-side in the upstream row. Place these rocks into the fresh mortar and fill the spaces between the rocks with mortar. Select and lay the second (downstream) row so that the rocks are centered on the mortar space of the upstream row.

- Place the next layer on top of the upstream row, centered on the mortar spaces in the row below. Thus, a vertical mortar joint does not continue to the next layer.

Follow these steps in laying the service pipes:

1. Lay the "plugged" pipe at the lowest level possible in the spring box so it can be opened to drain the box.

2. The diameter(s) of the service pipe(s) must be adequate to carry the spring flow. This can be determined by experimenting with the diverted flow, and using the size guidelines below:

Maximum Spring Flow	Pipe Diameter
up to 1.0 lps	30 mm
1.1 to 3.0 lps	50 mm
3.1 to 7.0 lps	60 mm

Previous Page Blank

3. The intake and outlet pipes should be placed at or below the level of the lowest annual point of emergence of the spring.

4. The pipes should extend far enough out of the box to permit convenient collection of water into a vessel, without being long enough to risk damage from hanging buckets or children hanging or swinging on the pipe(s). Stresses like these could cause the pipe to break out of the wall. All pipes should tilt slightly downward so that the downstream end is lower than the upstream.

5. The retaining wall should be at least 20 cm higher than the outlet pipes. The spring flow may increase during the wetter seasons, thereby increasing the flow and pressure against the box wall. If the box extends higher than 30 cm above the outlet pipes, install an overflow pipe placed 20 cm above the outlet pipe to discharge excess flow and relieve the pressure.

Evaluation Form - Spring Box Workshop

A. Goal Attainment: Please circle the appropriate number to indicate the degree to which the workshop goals have been achieved.

At the end of this workshop trainees will be able to:

- Identify resources necessary for a village spring capping project.

1	2	3	4	5
Low				High

- Communicate with village leaders and promote activities needed for project implementation.

1	2	3	4	5
Low				High

- Identify and apply strategies for involving the community in spring capping activities

1	2	3	4	5
Low				High

- Survey and evaluate sites for potential spring capping.

1	2	3	4	5
Low				High

- Communicate and apply relevant theories about water and its relationship to the environment.

1	2	3	4	5
Low				High

- Develop and implement work plans and logistics necessary for project start-up.

1	2	3	4	5
Low				High

- Coordinate and supervise the work force and delivery of materials.

1	2	3	4	5
Low				High

- Design and build a retaining wall for capping springs.

1	2	3	4	5
Low				High

- Design and build a spring box for capping springs.

1	2	3	4	5
Low				High

- Operate, maintain, troubleshoot, and repair capped springs.

1	2	3	4	5
Low				High

- Understand the application of the spring box as opposed to the retaining wall system.

1	2	3	4	5
Low				High

- Identify strategies for solving common problems which develop throughout the spring capping process.

1	2	3	4	5
Low				High

- Evaluate a spring capping project and document and record the information gathered for future use.

1	2	3	4	5
Low				High

- Develop action plans for implementing spring capping projects.

1	2	3	4	5
Low				High

B. Workshop Feedback and Learning: Please answer the following questions as fully as possibly so that the trainers can learn how effective the workshop methodology was.

1. What have been the most positive things about this workshop? Comments:

2. What have been the most negative things about this workshop? Comments:

3. Was the additional spring box training as valuable as the retaining wall training?

4. What things have you learned that you did not know before? Comments:

C. Workshop Organization and Training

1. What comments do you have about the way the workshop was planned and organized?

2. What comments do you have about the amount of time spent in the classroom compared to the amount of time spent in the field?

3. What can be done in the future to improve a workshop like this?

4. What specific steps in developing a spring capping project do you feel you will need to learn more about in order to successfully promote and develop such a project in the future?

5. What comments do you have about the trainers?

Evaluation Form - Spring Box Workshop

A. Goal Attainment: Please circle the appropriate number to indicate the degree to which the workshop goals have been achieved.

At the end of this workshop trainees will be able to:

- Identify resources necessary for a village spring capping project.

1	2	3	4	5
Low				High

- Communicate and facilitate village leadership activities needed for project implementation

1	2	3	4	5
Low				High

- Identify and apply strategies for involving the community in spring capping activities.

1	2	3	4	5
Low				High

- Identify and apply strategies for involving the community in spring capping activities

1	2	3	4	5
Low				High

- Survey and evaluate sites for potential spring capping.

1	2	3	4	5
Low				High

- Communicate and apply relevant theories about water and its relationship to the environment.

1	2	3	4	5
Low				High

- Develop and implement work plans and logistics necessary for project start-up

1	2	3	4	5
Low				High

- Coordinate and supervise work force and delivery of materials.

1	2	3	4	5
Low				High

- Design and build a spring box for capping springs

1	2	3	4	5
Low				High

- Operate, maintain, troubleshoot, and repair capped springs.

1	2	3	4	5
Low				High

- Identify strategies for solving most common problems which develop throughout spring capping process.

1	2	3	4	5
Low				High

- Evaluate a spring capping project and document and record the information gathered for future use.

1	2	3	4	5
Low				High

- Develop and implement action plans for integrating these improvements into village life for longer term environmental impacts.

1	2	3	4	5
Low				High

B. Workshop Feedback and Learning: Please answer the following questions as fully as possible so that the trainers can learn how effective the workshop methodology was.

1. What have been the most positive things about this workshop? Comments:

2. What have been the most negative things about this workshop? Comments:

3. What one thing stands out as important to you in this workshop? Comments:

4. What things have you learned that you did not know before? Comments:

C. Workshop Organization and Training:

1. What comments do you have about the way the workshop was planned and organized?

2. What comments do you have about the amount of time spent in the classroom compared to the amount of time spent in the field?

3. What can be done in the future to improve a workshop like this?

4. What specific steps in developing a spring capping project do you feel you will need to learn more about in order to successfully promote and develop such a project in the future?

5. What comments do you have about the trainers?

PARTICIPANT REFERENCE PACKET

OVERALL WORKSHOP GOALS

At the end of this workshop, trainees will be able to:

- Identify resources necessary to complete a village spring capping project.
- Communicate with village leaders and help them with activities needed for project implementation.
- Identify and apply strategies for involving the community in spring capping activities.
- Survey and evaluate sites for potential spring capping.
- Articulate and apply relevant theories about water and its relationship to environment and health.
- Develop and implement work plans and provide the logistical support necessary for project start up.
- Coordinate and supervise the work force and the delivery of materials.
- Design and build a retaining wall for capping springs.
- Describe three alternative spring capping systems: the spring box, seepage collection, and storage tank systems.
- Use, maintain, troubleshoot, and repair retaining wall spring capping systems.
- Identify strategies for solving the most common problems which develop throughout the development of spring capping retaining wall systems.
- Evaluate a spring capping project and document and record information gathered for future use.
- Develop action plans for implementing spring capping projects in their regular work environments.

WORKSHOP SCHEDULE

Day 1	Day 2	Day 3	Day 4	Day 5	Day 6
• Workshop Introduction	• Skills Assessment for Spring Development Technologies	• Preparation for Spring Development Construction Activities	Construction Activities		
			• Layout and Excavation	• Form Building and Reinforcement	• Constructing the Foundation
• Introduction to Spring Development	• Village Survey Methods and Data Collection for Spring Site Selection				

Day 7	Day 8	Day 9	Day 10	Day 11	Day 12
• Installation of Spring Retaining Wall and Pipe	• Community Selection and Decision-Making	• Use, Maintenance, and Repair	• Spring Site Completion	• Evaluating the Demonstration Spring Capping Project	• Planning Your First Spring Capping Project
	• Community Involvement: Organizing the Community to Participate	• Education for Spring Users	• Planning for Spring Capping Projects	• Alternative Spring Development Technologies	• Workshop Evaluation
					• Closure

THREE TYPES OF SPRINGS

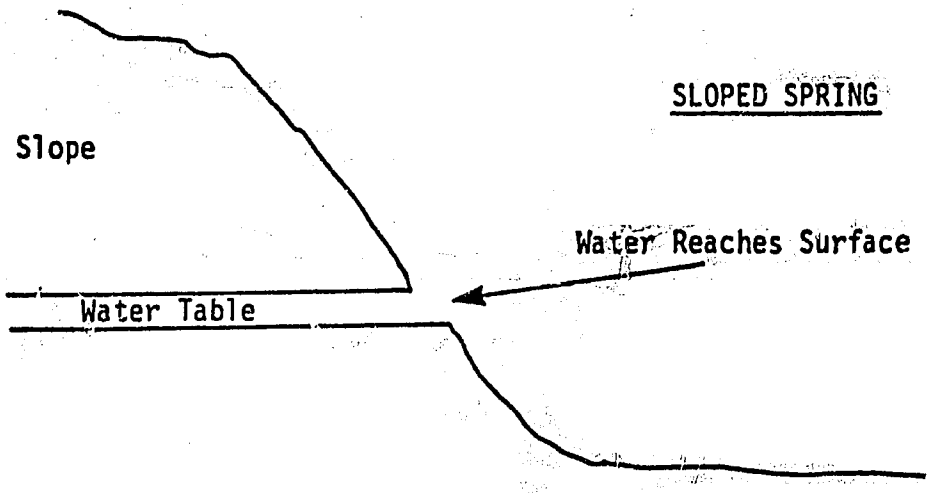

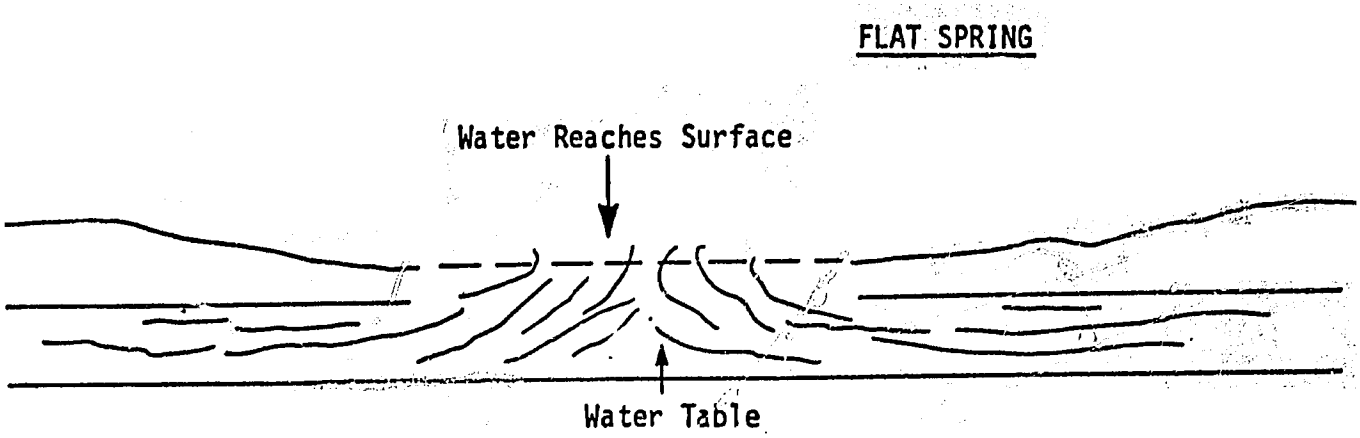

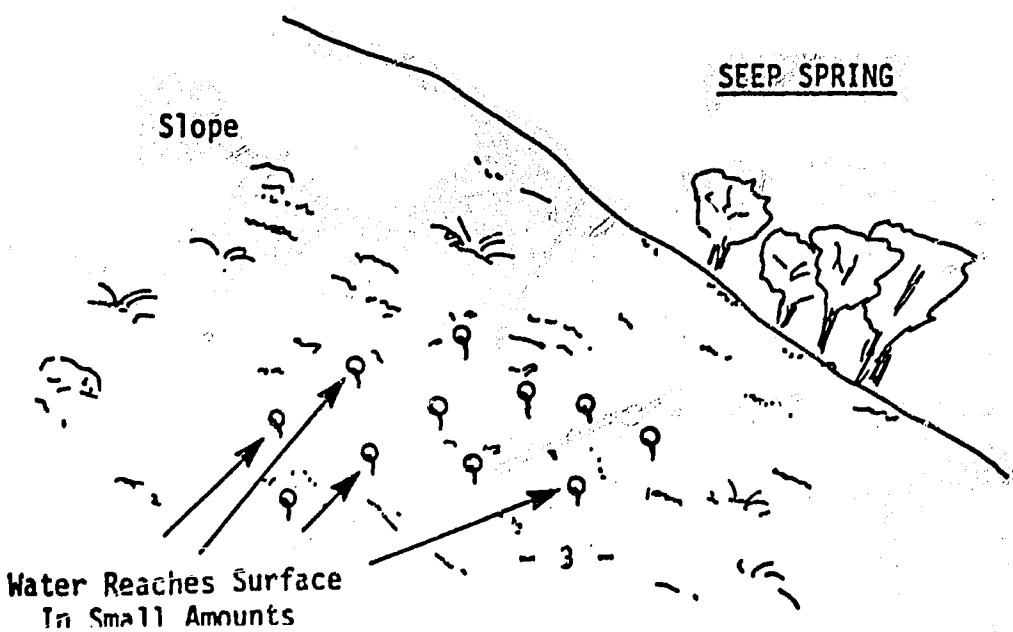

THE WATER CYCLE IN NATURE

Each time it rains, rain falls on the earth, in the rivers, in lakes and in oceans. When rainwater falls on the earth, part of it stays on the surface and feeds directly into streams and rivers, but another part penetrates the soil and little by little arrives at what is called the water table. It often takes water a long time to reach this water table, and during that time it becomes potable water because it is filtered by the soil. Rain falling on the soil must penetrate various strata (sand, limestone, gravel, clay) which become more and more closely packed, and which are very difficult for water to penetrate. In this way, the impurities and micro-organisms found in the water are retained by the soil, and the water becomes cleaner and cleaner. Under the water table is found an impermeable layer, of bed rocks or hard, clay-like soil, through which water cannot penetrate. The depth of the water table varies from place to place and can be right at the surface or as low as several hundred meters from the surface. The water in the water table never stagnates; it always flows slowly downhill, towards valleys, rivers and lakes, and finally reaches the ocean.

However, sometimes this water finds an outlet from the ground before arriving at a river. When the water table meets the earth's surface, one sees wet, soaked soil, and this is called a spring. It is here that people often come to draw water.

Also, sometimes the water table never reaches the earth's surface, and it becomes necessary to dig wells in order to gain access to water.

To review the water cycle, rain water falls on the earth. A part of this rain water flows directly into rivers, lakes, and oceans, and another part penetrates the soil and finally arrives at a body of water or at the surface of the earth.

Then the sun heats all the water on the earth's surface and some of it evaporates into the air, to form clouds which at a later time will form rain, and the cycle will continue.

How Does Water Become Contaminated?

In most cases, water in the water table (or groundwater) is clean and potable and contains few organisms which cause illnesses. Often it is at the spring where contamination originates. Here, leaves from trees, weeds, etc. can enter the spring water. Rainwater flowing down hills can enter the spring, carrying mud, filth from the surface, and even animal and human waste. Animals such as goats and pigs may use the spring for drinking or even to bathe in and thus may pollute it.

Also, people often draw water with unclean pots or buckets, and this too can contaminate water. Sometimes spring water does not flow well and stagnates with leaves and weeds carrying micro-organisms which have fallen into it. Algae forms, too, and all multiply rapidly in this water. In addition, occasionally there is not enough slope for the water to flow clear of the spring outlet, so the water continually re-enters the spring outlet and contaminates new water flowing out.

If there is a latrine near the spring, contamination is likely and dangerous. Many microbes live in the excrement of human beings.

Water from a spring which is open and not well managed can easily be contaminated in many ways. The question, then, is how can we protect a spring from this potentially great contamination?

Springs: Springs are points where water from an underground source is able to seep to the surface. Flows are typically less than 2 LPS, but some can be quite substantial. The flow of a spring is governed by several factors: watershed collection area, percolation rate of water through the ground, thickness of ground above the aquifer (ie- overburden), and the storage capacity of the soil. Springs are seasonally variable, tending to lag behind the seasonal rainfall patterns (ie- springs can give normal flows well into the dry season before tapering off, and may not resume full flow until after the rainy season is well under way). Due to ground percolation and filtration, most springs are quite free of the pathonogenic organisms that cause many health problems; however, some springs flow through limestone or geologic cracks and fissures in the rocks. In such cases, filtration effects are minimal, and the flow may still be contaminated. Also, it is possible that the source is not a true spring at all, but rather a stream that has gone underground for a short distance and is re-emerging. Investigation around the source will reveal the type of spring it is. Figure 2-1 shows the typical geology of a spring, showing the different levels of ground water during the dry - and rainy seasons.

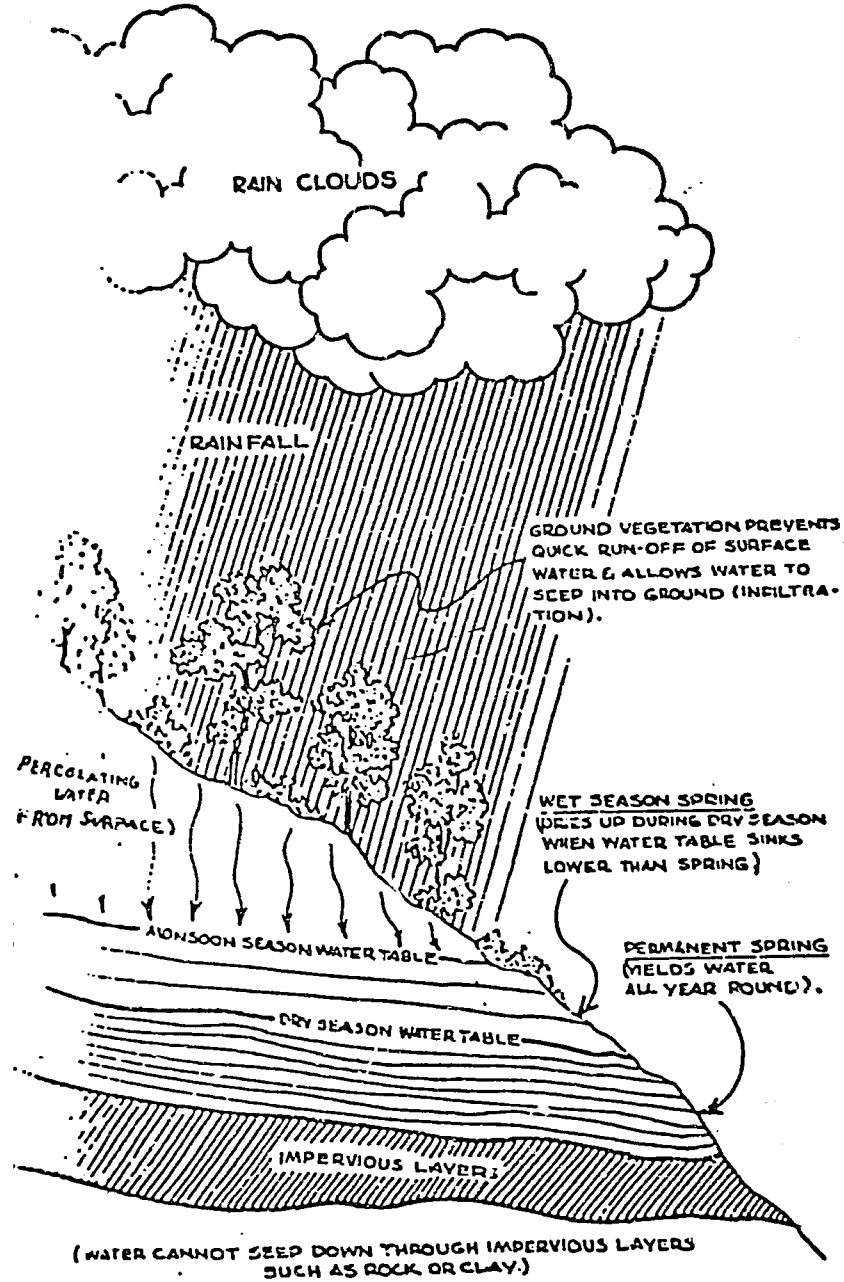

HYDROLOGIC DIAGRAM OF SPRINGS

taken from: T.D. Jordan, Jr., Gravity-Flow Water Systems, UNICEF, Nepal

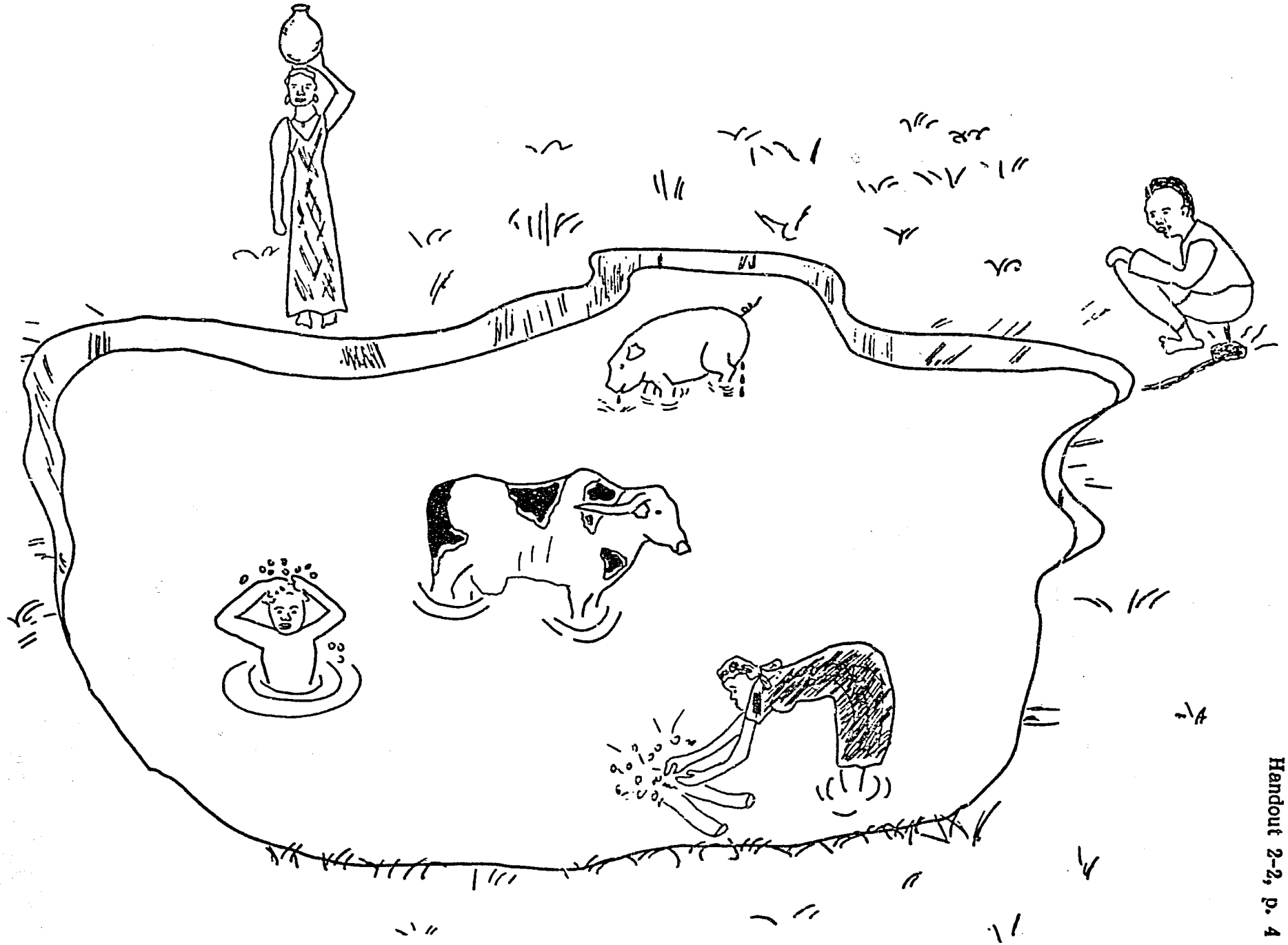

ILLUSTRATIONS OF WAYS WATER IS CONTAMINATED

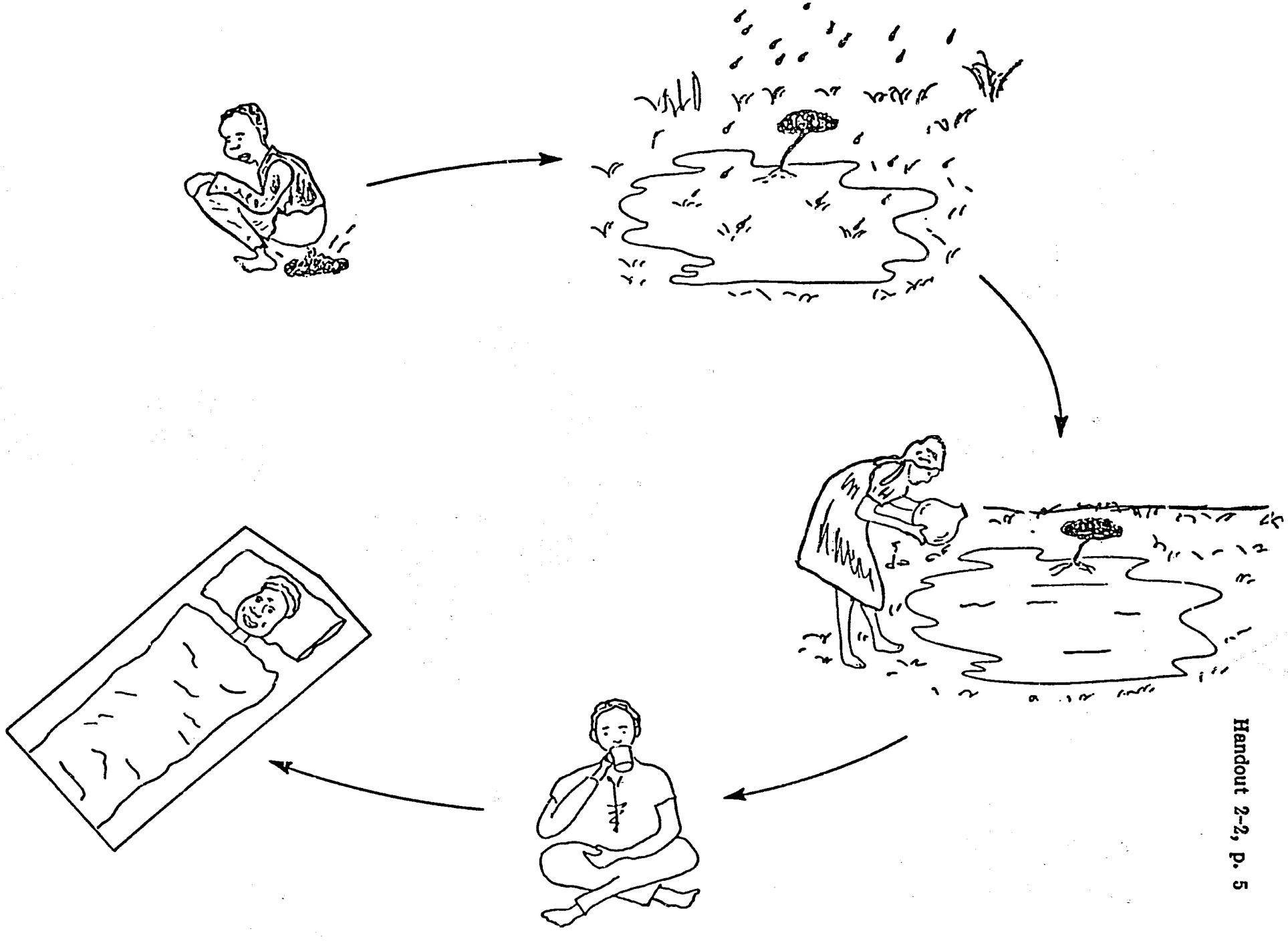

FECAL-ORAL PATH

SPRING CAPPING PROJECT CYCLE

PREPLANNING

Planning how to work spring capping into work load

Identifying resources needed for a village spring capping project

Design/conduct preliminary studies to determine which villages to begin with

Meet with and explain spring capping to village leadership

Meet with local users to find out their concerns and issues about their water requirements

PLANNING & DESIGN

Determine maximum springflow and type of development required

Design/conduct sanitary survey of village water usage

Compile/analyze/recommend appropriate sites

Present survey results to leadership; facilitate decision to proceed

Develop work plan for construction

Organize village labor force

Plan for and obtain needed materials and tools for construction

CONSTRUCTION

Layout/prepare site, create surface diversion

Excavation for proper foundation and spring capture

Design/construct concrete forms, lay rocks and mortar

Mix/pour concrete

Install structure(s)

Lay piping, complete connections, finish off the installation

Prepare and implement spring protection measures

OPERATION, MAINTENANCE, AND REPAIR

Select/train guardians

Train users in proper usage

Design/implement necessary maintenance schedule

Explain sanitation measures to villagers

Be prepared to solve any operational problems that arise; repairs

Recommend appropriate measures for making additional improvements of convenience

EVALUATION

Reflection on project, note what changes should be made before repeating cycle with next spring

Determine ways to integrate spring capping results into other community health and sanitation programs

Encourage village to celebrate completion

Identify future work for improving village water resources

TASK ANALYSIS FOR FIELD WORKERS WHO MANAGE SPRING CAPPING PROJECTS

Importance	Task Difficulty	
		PRE-PLANNING STAGE
1	2	1. Determine availability of outside resources which might be necessary in a village spring capping project (i.e., materials—cement, sand, gravel, tools; funding—cash contributions, loans, etc.; other spring capping efforts in the region; technical expertise—technicians from other types of projects, development agencies, etc.).
2	3	2. Assess current work responsibilities and commitments and plan how to incorporate spring capping project responsibilities into this existing work load.
2	3	3. Discuss and clarify job expectations with supervisor, setting up communication and reporting procedures to be used throughout the project.
2	3	4. Publicize availability of service to the region where you work.
1	1	5. Design and conduct preliminary studies of villages in the region, setting up criteria to determine which village(s) would be appropriate to begin a self-help spring capping project. Criteria might include comparative degrees of need, interest, and commitment; technical difficulty; village leadership capabilities; and socio-political conflicts.
1	1	6. Design, conduct, and document preliminary sanitary surveys to determine the most likely village for the initial project. Data should include number of, location, and condition of springs; flows during driest season; number of users; different uses; sources of contamination; sanitary practices and prevalent diseases.
1	1	7. Meet with and explain to village leaders just what spring capping is, why it is needed in the village, and how it will help the villagers.
1	1	8. Present to village leaders recommendations on how to proceed with spring capping in the village as well as helping the leaders to arrive at a decision whether to commit village resources to the project.
1	2	9. Meet with villagers to discuss current problems with springs and seek their suggestions on what would improve the use of the spring as a water source. Explain to villagers in ways they can understand what spring capping is and how it would be beneficial.

Importance	Task Difficulty	
2	1	10. Involve women at all stages of project development as users and decision makers.
2	2	11. Resolve the most common problems the extension worker encounters in utilizing a village to actually construct the capping facilities. Among these problems are weak village leadership, political issues, scarcity of labor, scarcity of materials, transport of materials, etc.
3	2	12. Interest people in water/health behavior and practices, realizing that changing attitudes toward water use, environmental sanitation, and personal hygiene is a long-term process.
		PLANNING AND DESIGN STAGE
1	1	13. Disturb spring and determine maximum flow, force, and type of improvement required. Determine rainy season flow conditions and what impact they will have on the design.
1	1	14. Design and conduct a detailed sanitary survey, involving appropriate members of the community in collecting information. Survey specifics could include traditions, customs, historical usage, reliability, collection time and volume, and sources of contamination.
1	2	15. Compile and analyze all information (both socio-political and technical) on possible sites, developing recommendations for which site is the most appropriate.
1	2	16. Present survey results, specific site recommendations, and plans and requirements for implementation to village leadership.
1	1	17. Plan and supervise the preparation of construction activities with the village mason and workforce. Demonstrate leadership by organizing the logistics and exploring alternatives for required materials and other resources; e.g., quantities, costs, and transport of locally available materials, tools, cement, and pipes; and days required and appropriate scheduling of labor.
		CONSTRUCTION STAGE
1	2	18. Lay out and prepare spring site for improvement. Create surface-runoff diversion and drainage ditches.
1	2	19. Excavate to a level suitable for proper foundation (impermeable layer) and spring capture.

Importance	Task Difficulty	
1	1	20. Design and construct concrete forms including placement of reinforcement where required.
1	1	21. Select materials and properly mix, pour, and cure concrete spring or storage structures.
1	2	22. Install structures; complete connections; lay gravel, piping, and water seal materials (e.g., clay, plastic); and backfill and grade with compacted soil.
1	2	23. Take measures to protect the spring and insure effective operation; e.g., fencing, separation of uses, height of discharge pipe. Use shallow rooted plantings and rocks for stabilization and erosion control.
1	1	24. Solve problems which may arise; e.g., inadequate curing of concrete, alteration of natural spring flow, inability to reach impermeable layer.
		OPERATION, MAINTENANCE, AND REPAIRS
1	2	25. Help the users to select a responsible guardian and assistants. Demonstrate to the users and train the guardians in proper operation and usage of the improved spring.
1	2	26. Develop and schedule appropriate maintenance procedures, e.g., cleaning spring box, clearing diversion and drainage ditches, repairing protective fencing.
3	2	27. Now that the villagers have put their time and effort towards cleaner spring water, make it clear that in order to realize the full benefits of their investment they must practice proper hygiene and sanitation. Demonstrate rinsing of containers and proper household storage, and avoiding possible sources of contamination.
2	1	28. Determine if a malfunctioning spring should be repaired, replaced, or abandoned. Recognize and be able to solve common problems which develop, e.g., undermining of foundation by spring flow, poor settling, unsanitary usage.
3	2	29. Discuss with the spring users ways to incorporate additional improvements in convenience or more effective water usage (e.g., clothes washing pads below spring discharge, use of drainage water for crops, construction of storage tank and transmission line).

Importance	Task Difficulty	
		EVALUATION STAGE
3	3	30. After the initial spring capping project is completed, the extension worker will need to reflect on how the project progressed, what worked and what didn't, and what should be done differently the next time.
3	2	31. Integrate water improvement project into other village health and sanitation activities (i.e., health education programs, sanitation improvement efforts, disease control, etc.).
3	3	32. Encourage the village to celebrate and feel proud of the completion of the spring capping effort.
2	3	33. Schedule periodic visits to return to the spring to see how the capping is working.
3	2	34. Identify what future spring capping activities would be appropriate for this village Develop means for infrastructural support. Present needs and results to authorities.

CODE:

Importance:

1 - must be done
2 - should be done
3 - could be done to extend benefits

Task Difficulty:

1 - very
2 - moderately
3 - easy

PLANNING GUIDES FOR YOUR SPRING CAPPING PROJECTS

Throughout this workshop you will be learning new skills and acquiring new information. Each one of you will have individual ways of managing (keeping track of, recording, remembering) what you have learned so that you have on hand the new skills and information you need to begin your spring capping activities. This planning guide will: 1) help you record notes on the workshop and observations on how what you are learning applies to your project or site conditions; 2) serve as a stimulus for your thinking, perhaps sparking new ideas or awareness; and 3) serve as a planning mechanism for your first spring capping project.

Specifically, the objectives of this planning guide are to help you to:

- Reflect on the activities in the training session you just completed in order to more clearly crystallize what you have learned
- Identify skill and knowledge gaps so that you can address these before the workshop is over
- Plan how you would apply these new skills and knowledge to your first spring capping project

How these planning guides will be used in the workshop

Some time will be set aside during the workshop at the end of each major training session for you to work on your planning guides for your own project. At that time the trainers will give you a clean copy of the planning guide to fill out for the major points of that session. (You may find you want to work with them occasionally during your free time.) Obviously, the more you are able to work on how you plan to cap your first spring, the more confident and the better prepared you will be to begin. There will also be a final planning session toward the end of the workshop.

PLANNING GUIDES FOR YOUR SPRING CAPPING PROJECTS

Spring Capping Activity on _____

_____

KEY STEPS

What are the steps I plan to follow in implementing this activity?

DIFFICULTIES What difficulties do I expect to encounter?

How do I plan to deal with these difficulties? Who can help me?

TIME How long will this activity take?

COMMUNITY INVOLVEMENT AND LABOR	Who must I talk with to accomplish this activity?
	Who will I work with?
MATERIALS AND TOOLS	What materials and tools will I need? Where will I obtain them?
	How much will they cost?

SKILLS AND KNOWLEDGE	What aspects of this activity do I feel the least prepared for? How can I prepare myself more in this area?

OTHER COMMENTS:

SELF-ASSESSMENT OF SKILLS NECESSARY FOR IMPLEMENTING SPRING DEVELOPMENT TECHNOLOGIES

Rank yourself in terms of how well you feel you now do each of these tasks. This is for your use only, so please be accurate and honest with your answers. Put check marks in the appropriate columns:

Column 1 if you now do this task well
Column 2 if you now do this task okay
Column 3 if you now do this task with difficulty
Column 4 if you can't do this task

Do well	Do okay	Do with diffi-culty	Can't do	
				<u>Pre-planning Stage</u>
				1. Determine the availability of resources necessary for a spring capping project.
				2. Incorporate the spring capping project responsibilities in your overall work commitments.
				3. Promote the availability of spring capping improvements in your region.
				4. Design and conduct preliminary studies of villages, setting up criteria to determine which villages are appropriate to undertake a spring capping project.
				5. Design and conduct preliminary sanitary surveys to determine the most likely village for the initial project.
				6. Determine who are the most appropriate individuals in the community to involve in the project.
				7. Develop strategies for involving the appropriate community members, including women, in the various stages of project development.
				8. Explain to community leaders what capping a spring involves and why it will benefit the community.

Do well	Do okay	Do with diffi-culty	Can't do	
				9. Explain to villagers three types of spring capping systems: retaining wall, spring box, and seepage collection.
				10. Make recommendations to the community on how to proceed with a spring capping project.
				11. Resolve common problems in motivating a village to undertake a spring capping project.
				<u>Planning and Design Stage</u>
				12. Determine maximum spring flow and type of spring improvement needed.
				13. Design and conduct a detailed sanitary survey.
				14. Gather, record, and analyze all the information on possible sites.
				15. Present survey results to the village leaders.
				16. Plan for the labor force needed for the construction.
				17. Schedule all construction activities, estimating the amount of time required for each activity.
				18. Estimate the tools and materials needed for capping a spring.
				<u>Construction Stage</u>
				19. Lay out and prepare the spring site.
				20. Control and divert surface water and spring flow.
				21. Find a stable impermeable location for the foundation of the retaining wall.
				22. Size and design the foundation and retaining wall.

Do well	Do okay	Do with diffi-culty	Can't do	
				23. Design and construct wooden forms for the concrete.
				24. Shape and place reinforcement material.
				25. Mix, pour, and cure concrete.
				26. Build the retaining wall using rocks and mortar and install service pipes.
				27. Seal and backfill the excavated spring area, erect fences to keep animals away, and use shallow rooted plants and rocks to prevent erosion.
				28. Solve problems common during construction such as inadequate caring of concrete, alteration of spring flow, and inability to reach the impermeable layer.
				<u>Operation, Maintenance, and Repair Stage</u>
				29. Help community to select and train a guardian in operation and usage of the improved spring.
				30. Develop procedures for routine maintenance, e.g., cleaning the spring box, clearing diversion and drainage ditches, and repairing the fencing.
				31. Demonstrate proper hygiene and sanitation practices, e.g., rinsing containers, storage of water, and avoiding sources of contamination.
				32. Determine if a malfunctioning spring should be repaired, replaced, or abandoned.
				33. Solve common problems such as undermining of the foundation by the spring flow, uneven settling of the structure, poor drainage, and unsanitary usage.
				34. Discuss with users ways to make additional improvements such as washing pads, use of drainage water for crops, and construction of storage tanks.

Do well	Do okay	Do with diffi-culty	Can't do	
				Evaluation Stage
				35. Evaluate each spring capping project for lessons learned.
				36. Integrate spring capping project into other health and sanitation activities in the community.

LECTURETTE NOTES: SELECTING A SPRING FOR CAPPING

1) Is the flow adequate? The spring has an adequate flow if it can provide enough water for at least the daily drinking water needs of the user group or village. Steps for determining this are to measure the flow of the spring to arrive at the total volume produced in one day and divide this by the number of people to be served by the spring. We will do this measurement this afternoon. By measuring the flow you obtain the number of liters available for use per person per day. Then compare this amount to the minimum standard of 15 liters per person per day to determine if the spring flow is adequate or not.

   Remember animals may be watered from this spring also. The following are approximate minimum water needs per animal: cows 10/15 liters; buffalo 15/20 liters; goats 5/10 liters; chickens 5 liters per dozen.

2) Is the spring flow reliable? A spring flow is reliable only if it is constant and adequate through both wet and dry seasons for many years.

3) Is the water safe to drink? Remember that spring water is often the best quality nature has to offer. It is continuously flowing from a source underground which has been purified by slowly filtering through many meters and layers of soil. However, it must be uncontaminated by pit latrines and other sources of human waste, livestock, fish ponds, food processing (for example manioc soaking and fermentation), bathing, washing, surface water runoff, and flooding.

4) Is the water convenient and accessible to the users? A spring should be as close to the users as possible to minimize the daily work required by the women and children to collect and haul water. Difficult and hazardous crossings should be avoided, for example, roads, log bridges, or infested waters.

5) Is it technically feasible to cap the spring?

   In determining if it is technically feasible to cap a specific spring, there are several factors to be considered.

   - A spring should have an adequate slope for proper drainage.
   - It should have protection from flooding and diversion of watershed runoff.
   - The slope should be steep enough so that a collection vessel can be placed underneath the discharge pipe.
   - Labor and materials such as gravel, rock, sand, and clay should be locally available.
   - There should be a solid footing on well-drained ground for the structure.

SANITARY SURVEY FORM

1. Village _____

2. Location _____

3. Village leader(s) _____

_____

4. Village population _____

Animal population and water needs _____

5. Number of families _____

6. Health center or organization _____

_____

7. Name of spring _____

_____

8. Distance from village _____

_____

9. Location of spring (distance from users) _____

_____

10. Slope _____; flow _____ (lpm)

accessibility _____

11. Number of people using spring _____,

average number of litres per day per person _____

12. Quality of water _____

_____;

Condition during dry season _____

_____

Condition during wet season _____

13. Soils around spring _____

_____

14. Sources of contamination _____

_____

Physical Characteristics of the Location

Springs. Springs can provide a very good source of water for a community supply. Generally, water from springs can be used without treatment if the source is adequately protected with a spring box. Not all water from springs is free from contamination. A sanitary survey of the spring site will help determine whether contamination is likely.

The first step in a sanitary survey of a spring site is to determine the physical conditions above the point where the water flows from the ground. If there are large openings or fissures in the bedrock above the spring, contamination of the spring from surface runoff may occur. Surface runoff enters the ground through the fissures and contaminates the spring water underground.

Find the true source of the spring. Many times, a small stream disappears into the ground through a fissure and emerges again at a lower elevation. What appears to be a spring actually may be surface water that has flowed underground for a short distance. The water is generally contaminated and may flow only during the wet season.

Determine if there are sources of potential fecal contamination. Livestock areas, septic tanks and other sewage disposal sites are sources of contamination. If they are located above the source or closer than 100m to it, contamination may occur and disease-causing bacteria can enter the water.

The second step in a sanitary survey is to study the area at the spring site. The type of soil may indicate that contamination is likely. Filtration may be poor if permeable soil deeper than 3m is within 15m of the spring. Water passes quickly through coarse soils and impurities are not filtered out. If this condition exists, or if there is any suspicion of contamination, a water analysis must be done.

A spring flowing from limestone or highly fractured rock may be subject to contamination. Earth movements create fissures and cracks in limestone allowing surface run-off to enter the ground rapidly with little or no filtration of impurities. If a spring flows from a limestone bed, check the water after a heavy rain. If it appears turbid, suspect surface contamination and either analyze the water or choose a better site.

Community members must always be consulted during a sanitary survey. Information from local people should be added to the information collected through observation. They will know about spring yields and reliability and about other local conditions.

*Taken from Water For the World - Conducting Sanitary Surveys to Determine Acceptable Surface Water Sources. Technical Note No. RWS. 1, p. 2.

Bacteriological Quality of Water

Good quality water must be available to ensure the health of the people in a community. The bacteriological quality of water is especially important. Water used for drinking must be free from disease-causing fecal contamination. Fecal contamination can be prevented by the protection of water sources, by the removal of sources of contamination, and by the treatment of water. A thorough sanitary survey must determine the potential sources of contamination of a water source so that measures to protect the source can be developed.

An untreated water source should be as free from bacteriological contamination as possible. The greatest and most widespread source of such contamination is human and animal wastes, which is called fecal contamination. A sanitary survey determines the degree to which water sources may be subject to fecal contamination.

Equipment for testing water may not be available and water analysis may be impossible. If so, observation can reveal characteristics that indicate bacteriological contamination. If there is a layer of scum on the water surface, suspect contamination. If excessive algae are growing in a pond or lake, there are organic impurities which may indicate the presence of fecal matter in the water. Speak to local health officials and village leaders to find out if there is a large number of cases of diarrheal illnesses. Many cases of diarrhea, especially among young children, may be an indication of contamination in the water source.

By simple measures such as removing obvious sources of contamination from a catchment area, fecal contamination can be controlled and eliminated. If contamination is not reduced, then the water source should be considered unacceptable.

Physical and Chemical Quality of Water

The bacteriological quality of water is the most important factor in determining the acceptability of a source. Many times, though, water is bacteriologically safe, it has physical or chemical characteristics that make it unpleasant or unattractive to the users. To determine the exact physical and chemical quality of water, laboratory analysis must be done. An evaluation of physical and chemical conditions can be made by doing a sanitary survey. A thorough sanitary survey can detect turbidity, color, odors, and tastes and help determine the acceptability of the water source.

Turbidity. Turbidity is the presence of suspended material such as clay, silt, organic and inorganic material which clouds or muddies water. Turbid water may be potable but often it is aesthetically unacceptable to users. Turbidity may also indicate contamination. A laboratory analysis should be done, if possible.

Color. Dissolved organic material from decaying vegetation and some inorganic material cause color in water. An excessive algal growth may cause some color. Color in water is generally not harmful but it is objectionable and may cause users not to drink the water. Highly colored water needs treatment.

Odors and Tastes. Odors and tastes in water come from algae, decomposing organic material, dissolved gases, salts and chemicals. These may be from domestic, agricultural or natural sources. Water that has a bad odor or a disagreeable taste will be rejected by a community for a different source.

FLOW-MEASURING TECHNIQUES

In most investigations, accurate flow measurements of a source will require some earthwork, usually just a simple type of earth bank, dam, or drainage channel. Thus it is advisable to bring along one or more villagers with digging tools and a machete-type knife (for clearing away underbrush, etc). After the channels or dams have been constructed, wait a few minutes for the water to achieve steady, constant flow, before attempting any measurements.

Discussed below are two simple methods for measuring the flows of springs and streams. Always measure the flow several times, and calculate an average reading. Any measurements which are obviously deviant should be repeated. Question the villagers closely about seasonal variations in the flow.

Bucket and stopwatch: Spring flows are most conveniently measured by using a wide-mouthed container (of known capacity) and timing how long it takes to fill up. A large-size biscuit or kerosene container (capacities of about 18-20 liters), or a bucket, is usually available in the village. For the most accurate results, the capacity of the container should be such that it requires at least 15 seconds to fill (smaller containers, such as one-liter drinking canteens, should only be used if nothing larger is available). An ordinary wristwatch (that has a sweep-second hand) can be used for timings, but it is best in this case if two persons work together: one concentrating on the wristwatch, the other filling the container. The flow is calculated:

$$Q = \frac{C}{t}$$

where:

Q = flow (liters/second)

C = capacity of container (liters)

t = time to fill (seconds)

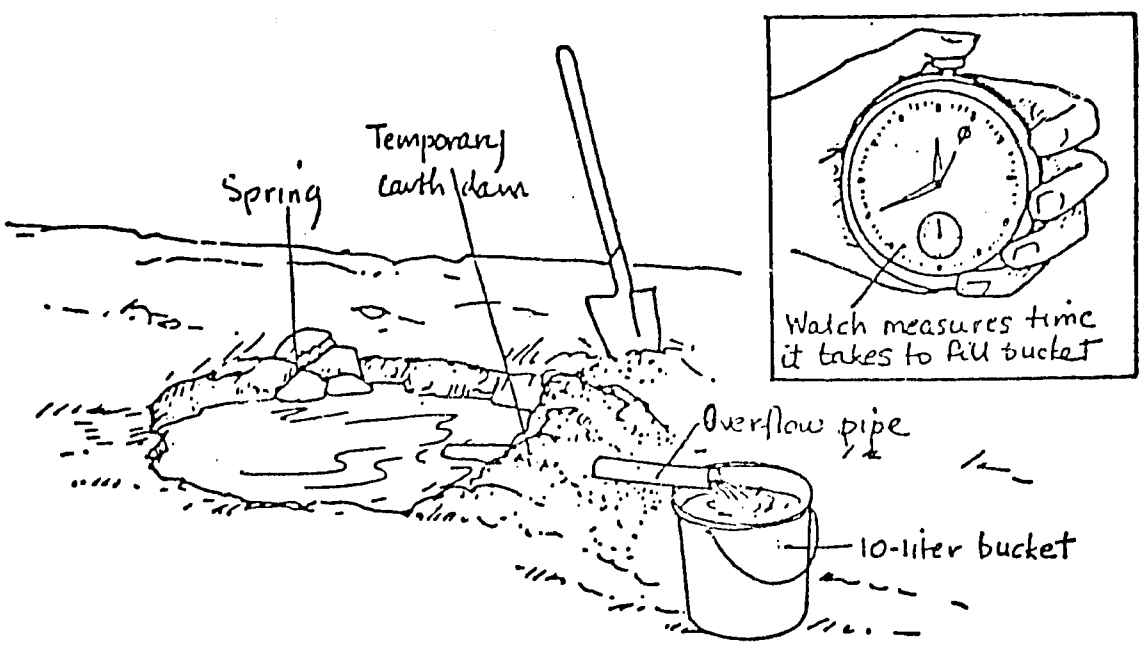

taken from: T.D. Jordan, Jr., Gravity-Flow Water Systems, UNICEF, Nepal

Velocity-area method: This method requires more work and is not as accurate at the V-notch weir, yet for particularly wide streams it can be easier to use. Measure the surface water velocity of the stream by timing how long it takes a drifting surface float (such as a block of wood) to move down a measured length of the stream (this measured section must be fairly straight and free of obstacles, for a length of 6-10 times the average water depth). Measure the cross-sectional area of the stream. The measurements should be repeated several times, averaging the results together. The average stream velocity is 85% of the surface velocity, and the flow is calculated:

$$Q = 600 \times V \times A$$

where: Q = flow (LPS)

V = surface velocity (m/sec)

A = cross-sect'l area (m^2)

This method of flow measurement is applicable to streams of water depth of at least 30 centimeters. Figure 2-3 illustrates the velocity-area method of measurement.

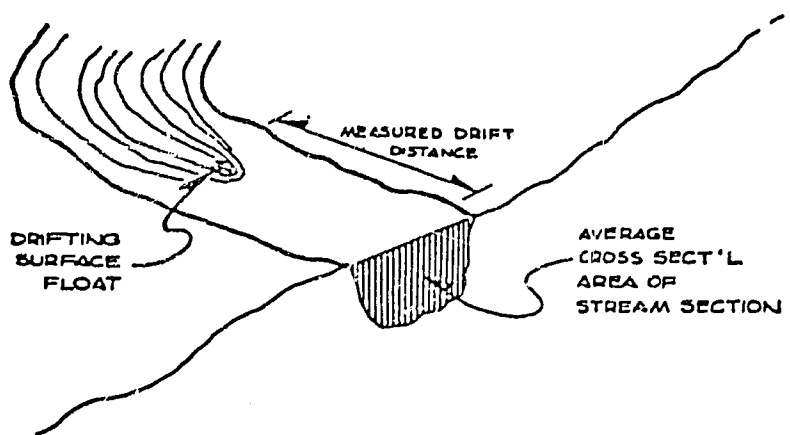

AVERAGE STREAM VELOCITY = 85% OF SURFACE VELOCITY.
MEASURED DRIFT DISTANCE SHOULD BE 6-10 TIMES AVERAGE DEPTH.

FLOW Q = V·A·850

Q = FLOW (LPS)
V = SURFACE VELOCITY (METRES/SEC)
A = CROSS SECT'L AREA OF STREAM (M^2)

FIGURE 2-3 VELOCITY-AREA METHOD OF FLOW MEASUREMENT

PHOTOGRAPHS OF STAGES OF SPRING DEVELOPMENT

Figure A. Building the Forms for the Foundation

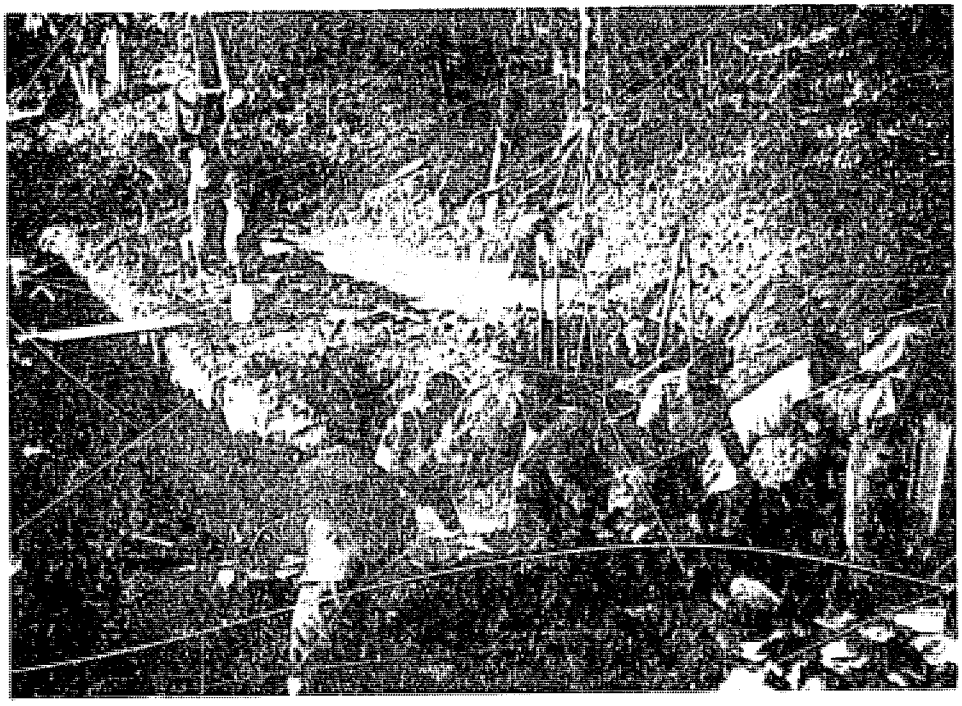

Figure B. Building the Rock and Mortar Wall

Figure C. Pouring Concrete for the Foundation

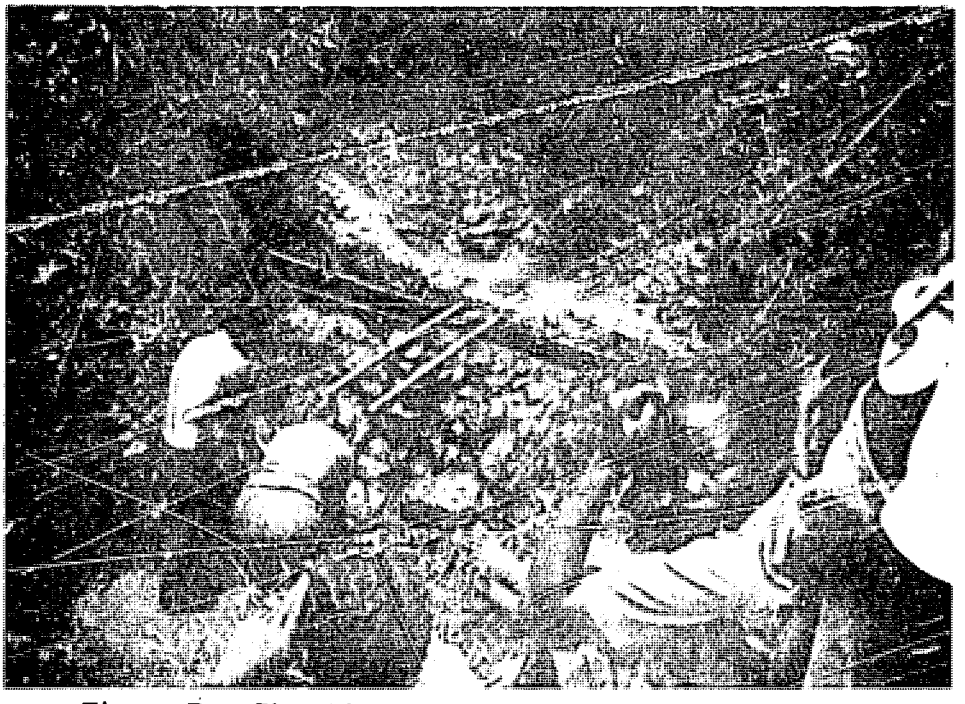

Figure D. Clay Wall To Keep Construction Area Dry. Pipes Diverting the Flow

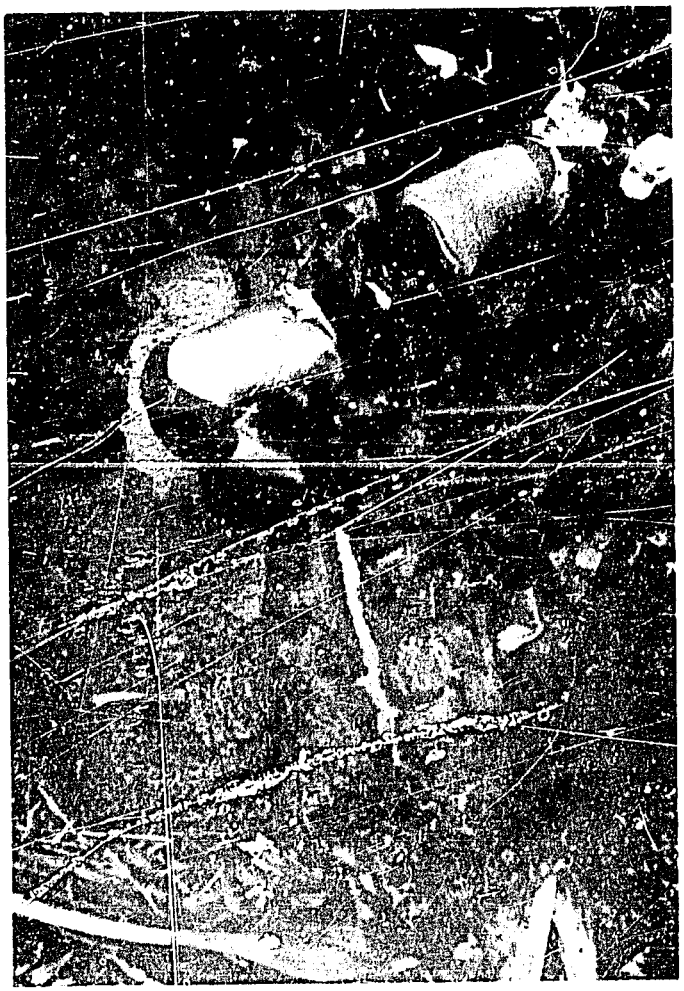

Figure E. Building Rock and Mortar Wall

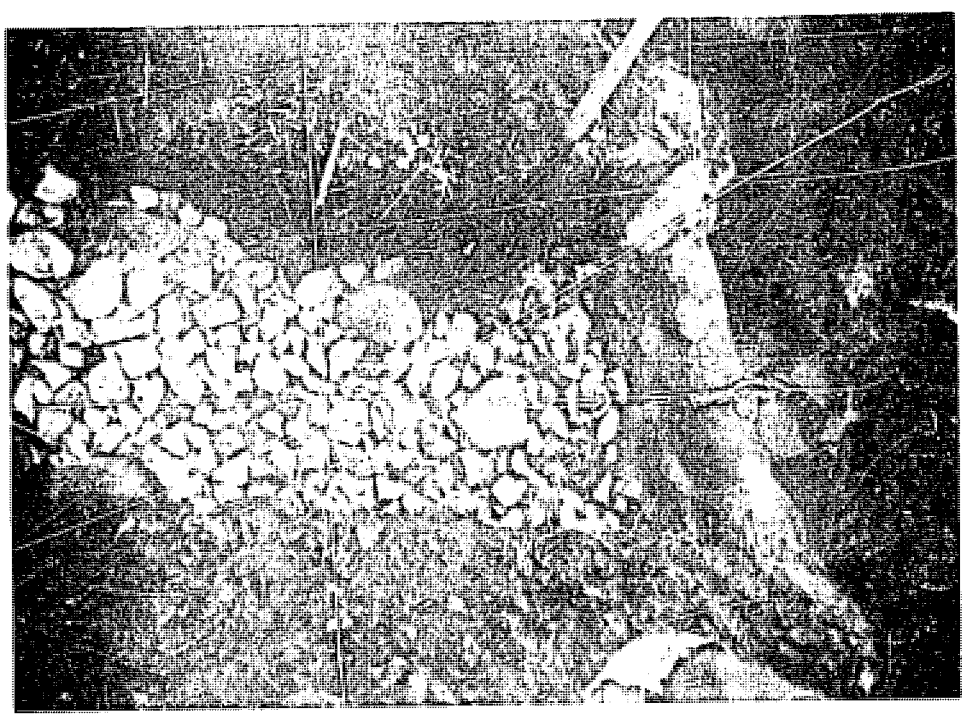

Figure F. Nearly Completed Retaining Wall, Showing Rock and Gravel Fill-in

RETAINING WALL STRUCTURE

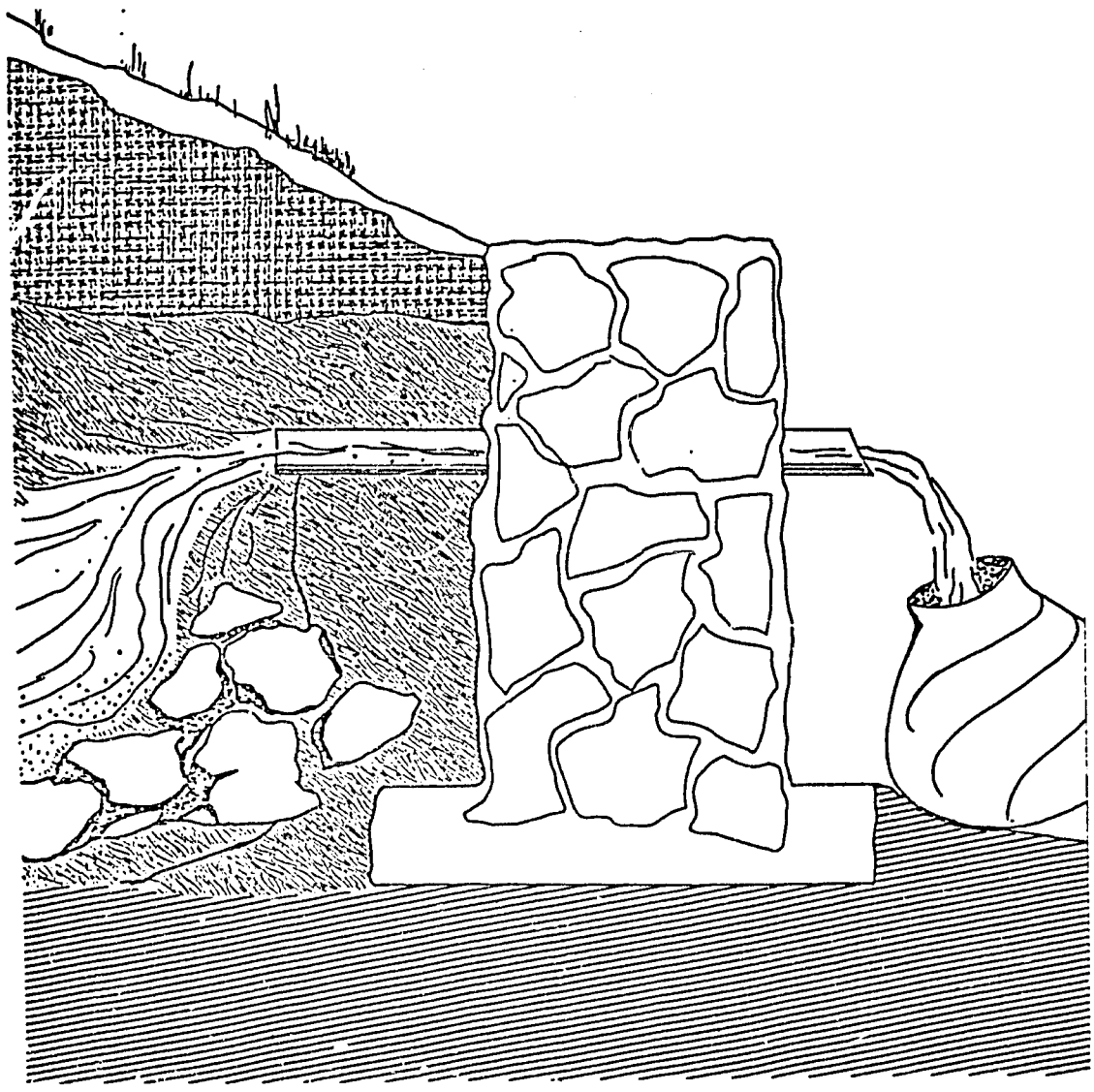

DIMENSIONS FOR FOUNDATION AND RETAINING WALL

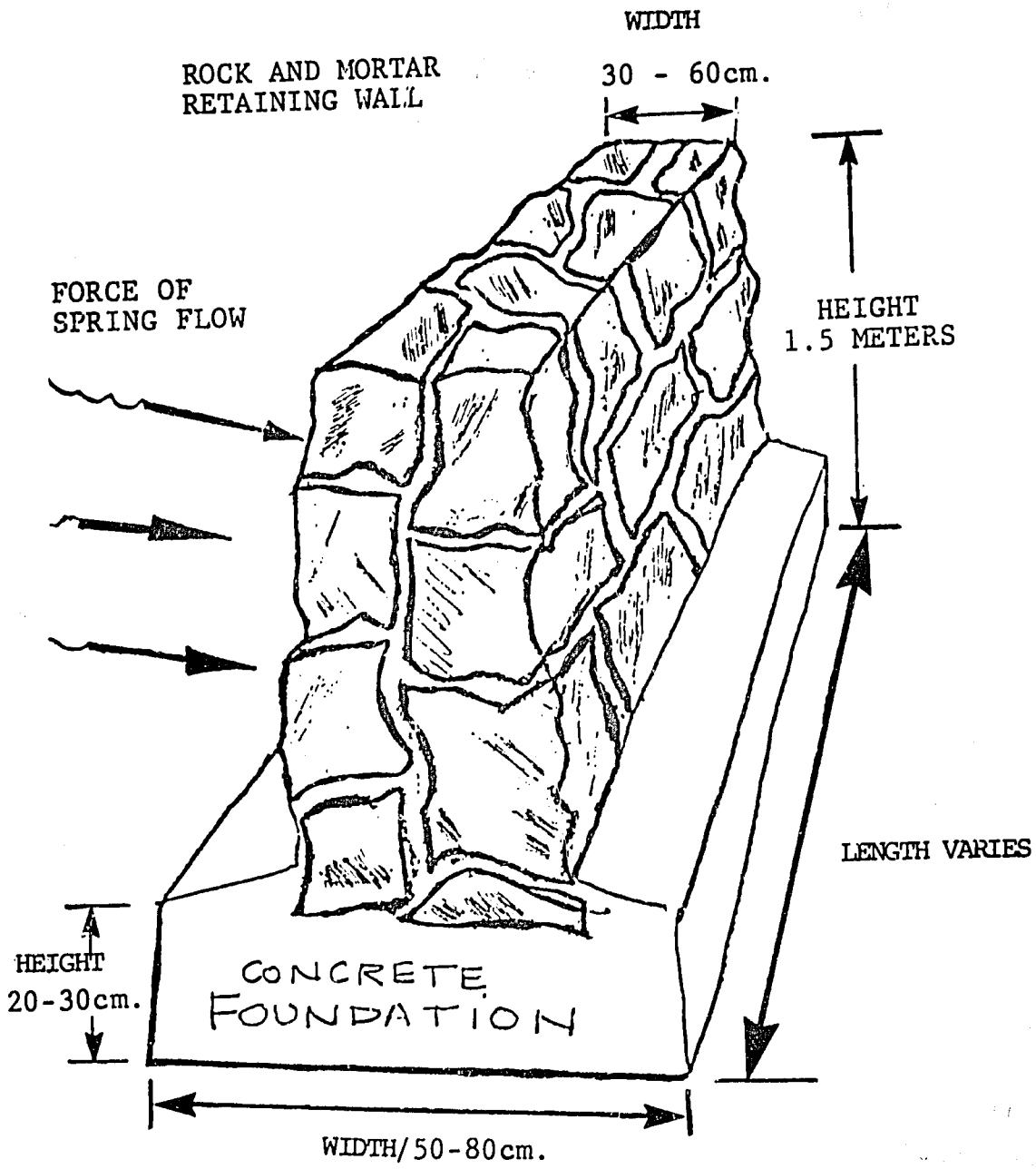

REINFORCEMENT RODS IN FOUNDATION

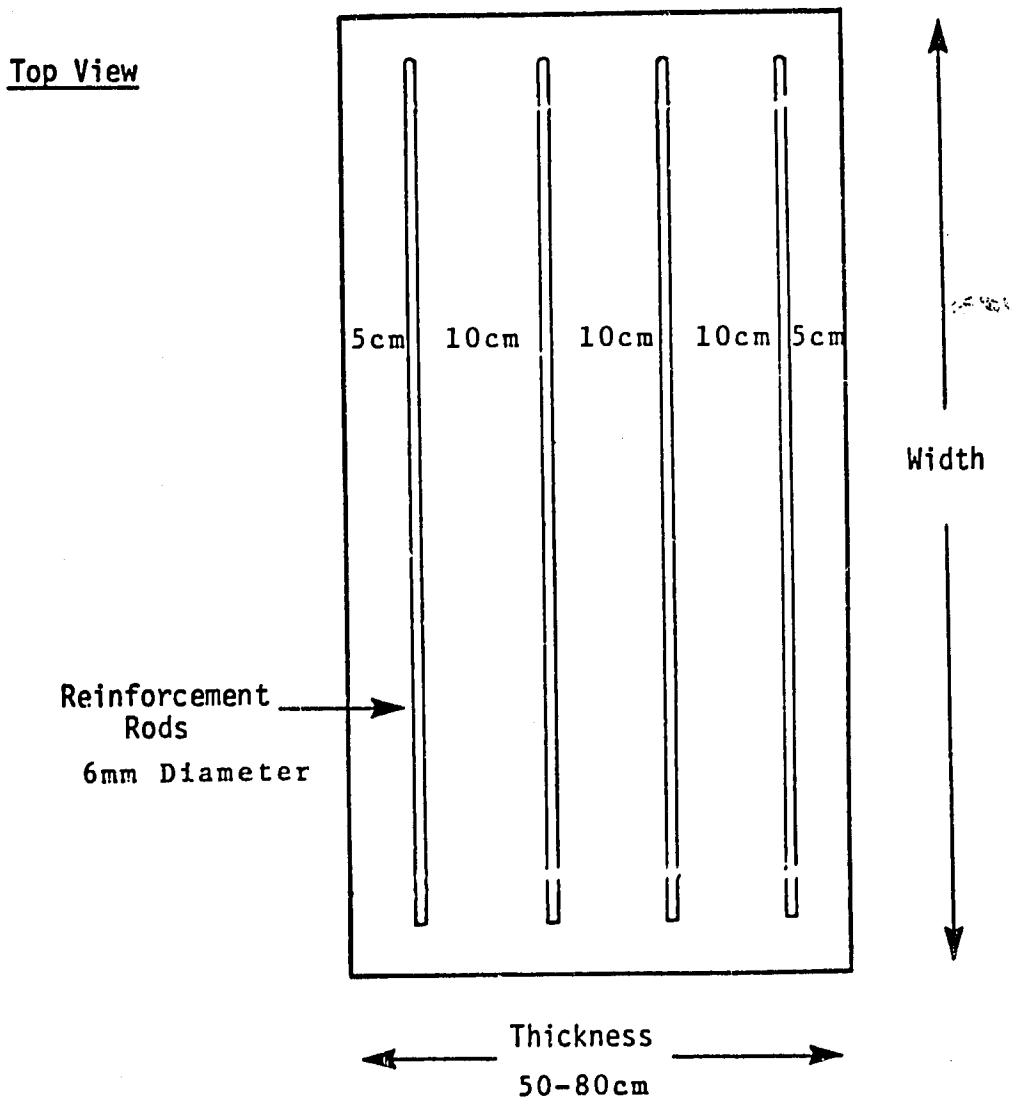

MATERIALS AND SYSTEM COMPONENTS

System Components	Materials and Tools
• Excavation	. picks . shovels . wheelbarrow . measuring tape or rods
• Diversion ditches and canals	. picks . shovels . wheelbarrow . gravel/rocks
• Foundation	. water . cement . sand . gravel . rocks . reinforcement . nails/hammer/saw . wood for forms . oil for lubricating forms . shovels . buckets . sifting screen . tamper (compacter) . trowel
• Retaining wall	. rocks . clay . cement . sand . gravel . galvanized iron pipe . screening for pipe . trowel
• Splash pad	. cement . gravel . sand . wood for forms . flat stone
• Well for temporary containment and diversion of springflow	. clay . rocks

• Watertight seals for retaining wall	• clay • mortar
• Backfill	• rocks • sand • gravel • clay • soil • shovels • wheelbarrow
• Watertight sealed layer (to prevent surface water from contaminating spring flow)	• clay

QUANTITIES OF MATERIALS REQUIRED FOR AN AVERAGE SIZE RETAINING WALL STRUCTURE

Supplies

Cement	10-20 sacks, 50 kg, top grade, dry and powdery
Sand, clean (uniform)	1-2 cubic meters
Broken stone (1 cm diameter)	1-2 cubic meters
Rock, clean	1-3 cubic meters
Reinforcement rods (rebar)	4-6 6 mm rods 6 m in length or 25 m total length
Wrapping wire	5-10 m of 3 or 5 mm flexible wrapping wire
Pipe and appurtenances	50 mm diameter galvanized iron pipe 1 m threaded one end (outlet pipe) 0.7 m threaded one end (drain pipe)
Intake screen with flanged connections	
Plug for drain pipe	
Plastic	1 roll of thick plastic sheeting, 1 m wide x 5 m long
Chlorine bleach	2 gal. or 10 liters
Sturdy rope or cord	1 roll 1-2 cm
Clay	Locate a source for good quality clay as close to site as possible. (Quantity varies)
Wood for forms and mixing board	Locally available lumber

Labor

1-2 masons

3-5 laborers

Tools

2 spades for digging

1 rake

trowels (1 for every 2 participants)

3 wooden paddles

1 pick axe

1 crowbar

2 saws for cutting forms

1 hacksaw or wire snipper

2 hammers

2 boxes of flat headed nails for building forms

4 plastic buckets of known volume

1-2 wheelbarrows

1-2 measuring tapes

1 sifting screen

1 tamper/compactor

gloves

The above suggested list is, of course, based on estimates and will certainly vary depending upon the size of the spring capping required. These items are usually necessary. However, they may not be readily available. Alternative materials may be substituted if necessary.

DRAINAGE CANALS

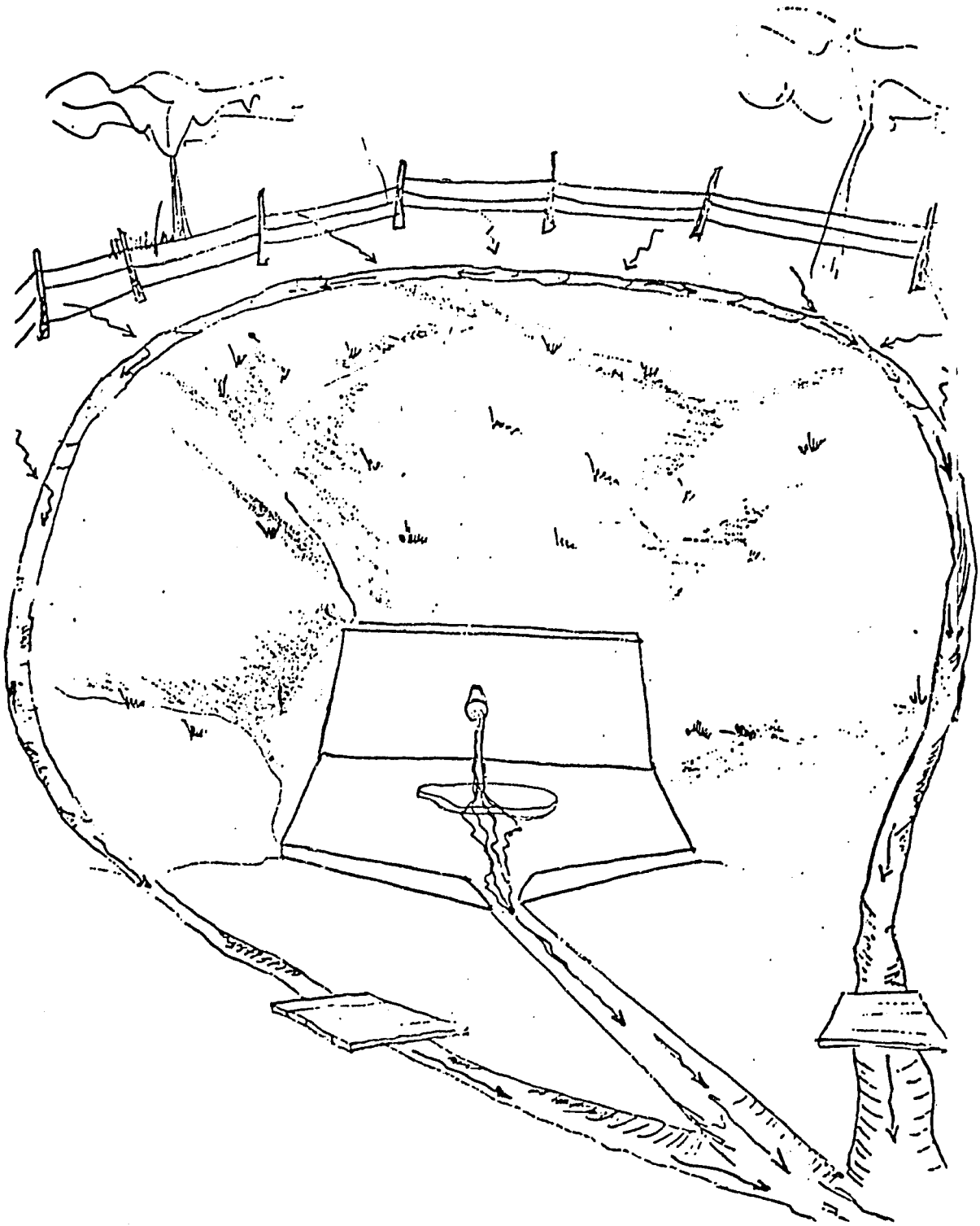

LECTURETTE NOTES: LAYOUT AND EXCAVATION OF THE SPRING SITE

Layout and excavation of the spring site are accomplished in three major steps:

1. Investigate the spring flow.
2. Excavate the site for construction.
3. Protect and control spring flow during construction.

1. Investigate the Spring Flow

Springs form when underground water follows the path of least resistance through soils and reaches the surface. In investigating spring flow the first thing to do is to explore the area to determine if this site is the first and only place that this spring flow surfaces. This is done by checking the area above the spring and the area surrounding it to see if there are other sources of water which might be connected to this spring. If there are other sources of water in the area, check to see if these sources could possibly contaminate the spring you intend to cap. You might have to protect the entire area or the spring that is being capped could be contaminated by other springs immediately surrounding it.

Most people have a respect for nature's mysterious springs and prefer not to disturb them. However, you will need to clear away and drain any mud, rocks, standing water or other obstacles to spring flow in order to release or unify its maximum flow. If the flow is small with little pressure, take care not to plug the flow as it may seek another outlet and disappear.

Springs flow and come to the surface by the force of gravity or from pressures created by the weight of layers of earth. Often in flatter regions there is insufficient height between the spring flow elevation and the ground level for the collection vessel to be placed. Also, there must be enough drop in elevation below the collection point to provide drainage. Wells are usually better in flat terrain.

2. Excavation of the Spring Site for Construction

The immediate area surrounding the spring flow should be cleared to a depth free of muddy or loose material so that the structure can be attached or placed upon firm, stable soil or rock. The extent of the excavation will depend upon the type of spring construction and the particular physical conditions. It may vary from a cubic meter for small springs with or without slope, to a few cubic meters for larger springs or seeps where the excavation is spread wide to collect several spring flows.

In the cases where spring flow is to be retained by a wall or box, a suitable site for the foundation must be excavated and leveled.

3. Control of Surface Runoff at Spring Site

Often a spring is located in an area which receives surface runoff when it rains. Surface runoff can cause soil erosion around the completed spring retaining wall, and it may damage the wall. In areas with heavy rainy seasons, surface runoff flows can be heavy and damaging.

The site around the spring capping structure should be protected from surface runoff by excavating a drainage ditch around the periphery of the site. The ditch should be laid out in such a way that it can intercept surface runoff and divert it around and away from the site. A typical arrangement is illustrated in Handout 6-1: Drainage Canals.

The size and extent of the drainage ditches will depend on the quantity of runoff that must be diverted. It is best to question the local residents about the need for runoff diversion and the quantity of runoff that can be expected. In locations with heavy rains, ditches with a depth and width of one-half meter or more may be necessary.

WOODEN FORMS FOR CONCRETE FOUNDATION

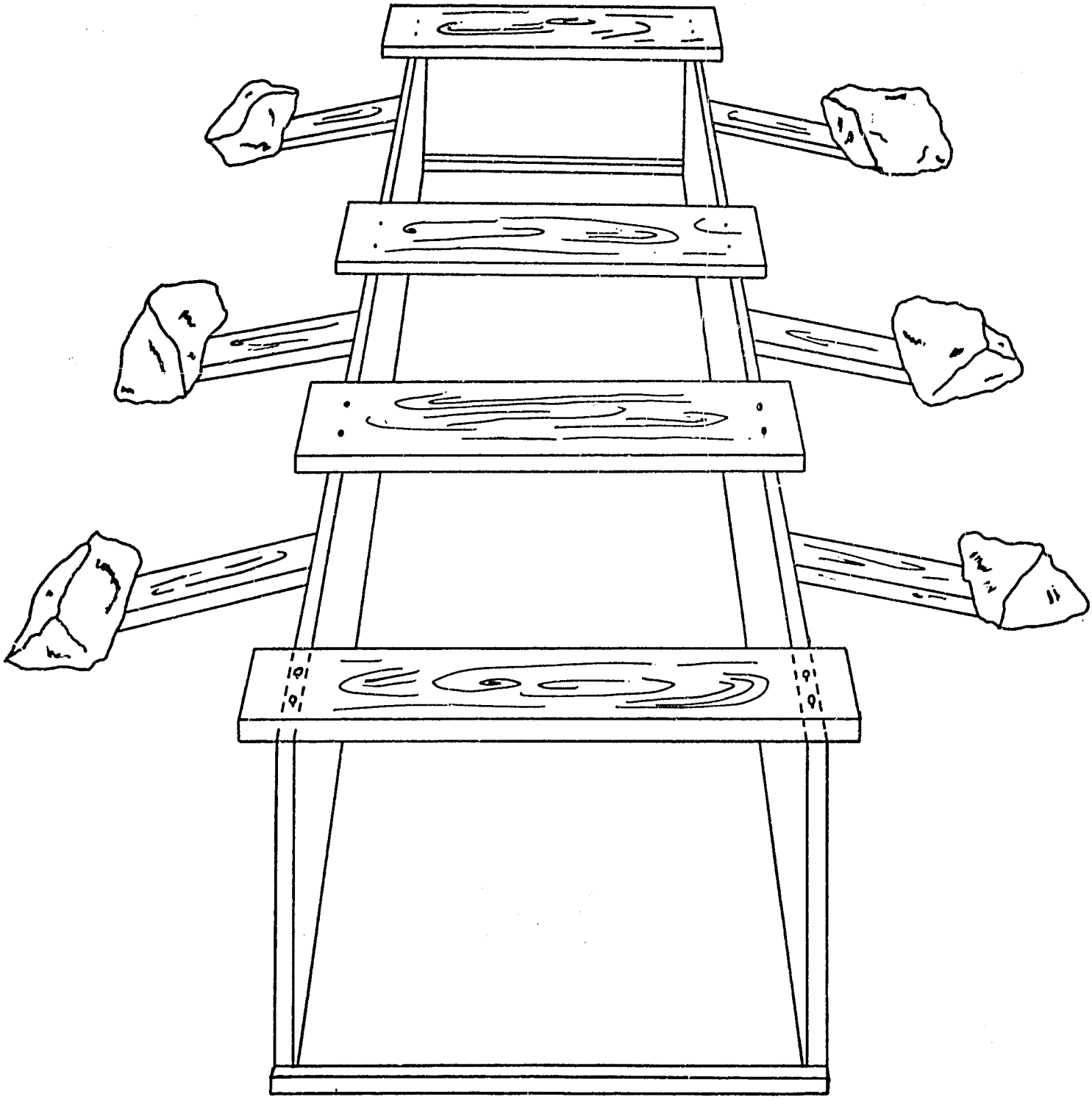

LECTURETTE NOTES: CONSTRUCTING THE FOUNDATION

A foundation is the spring system's link to the ground, its base, floor, or footing. The foundation must also be securely attached to the wall or structure it supports in order to provide holding strength to counteract the forces it is built to oppose or control. In this case the forces from the flow and volume of spring water under the pull of gravity will try to push the wall over or seek ways of getting around or under it. Since the structure must continually oppose these forces for perhaps 10 years, inspection and maintenance are important to prevent system failure.

There are five basic tasks to complete this construction step. They are:

- Find a solid, stable, impermeable location for the foundation.
- Measure the depth, width, and thickness which will be required for the wall.
- Connect or key the foundation into the earth.
- Lay out and build the forms which will hold the concrete in the shape desired until it has hardened.
- Shape and hang reinforcing materials.

Finding a Solid, Stable, Impermeable Location for the Foundation

A common cause of retaining wall failure is undermining, in which the spring flow forces its way under the foundation and escapes. To avoid this:

- Dig 15 cm down into a solid, stable layer.
- If it is to be on soil, excavate until a stable, impermeable soil is revealed. Excavation to rock is preferable.
- Make the soil or other impermeable layer level so the weight of the structure will be distributed evenly.

Deciding What Height, Length and Width Will be Required for the Wall

The three dimensions of height, length, and width will obviously vary for different site conditions. These factors should be considered in making this decision:

- The structure to be built
- The flow and force of the spring flow
- The strength and stability of the supporting soils and rock

Based on the above conditions, choose from the model foundations given during the planning and design session.

Connecting or Keying the Foundation to the Earth

Where possible use natural conditions to connect or key the foundation into the earth. Do this by:

- Always removing topsoil from the area and continuing to excavate at least 45 cm below the existing ground surface.
- Providing wing walls or supports pushing on the front or outside face of the structure against the natural flow force and gravity.

Laying Out and Building the Forms to Hold the Concrete

Lay out and build the forms which will hold the concrete in the shape you want it until it has hardened and attained its full strength and permanent form.

- Select materials which can be cut to fit tightly into the space which you have excavated for the foundation.
- Use wood, sheets of tin roofing, or other rigid materials which can resist and maintain their shape as the wet concrete pushes against them.
- As concrete hardens, it shrinks.
- Concrete is very dense and heavy; 2,500 kg per cubic meter or 150 pounds per cubic foot.
- If the form is constructed above ground realize that the bottom section will try to expand more than the top as the weight pushes down.
- All corners and sides must be securely connected to resist the expansion forces which will seek the weakest point in the form.

Shaping and Placing Reinforcement Materials

Concrete can resist crushing weight, but it can be bent and is brittle and cracks easily. Reinforcement is used to prevent bending or stretching.

An iron rod will bend, but not break, and it will not stretch. Therefore, as the concrete hardens, it grips and adheres to the ridged rod. Then when force is applied to the concrete, the strength of the rods within it will help it resist.

Reinforcing rod is expensive and often in short supply, but worth getting.

Reinforcement should be provided at a level 2/3 the depth, 1/3 from the bottom, and five centimeters from the surface along the entire width and across the thickness in two, three or four places.

The reinforcement should be clean and dry and placed or hung so it will be completely covered by the concrete, thus protected from corrosion or destruction by the weather or the spring's waters.

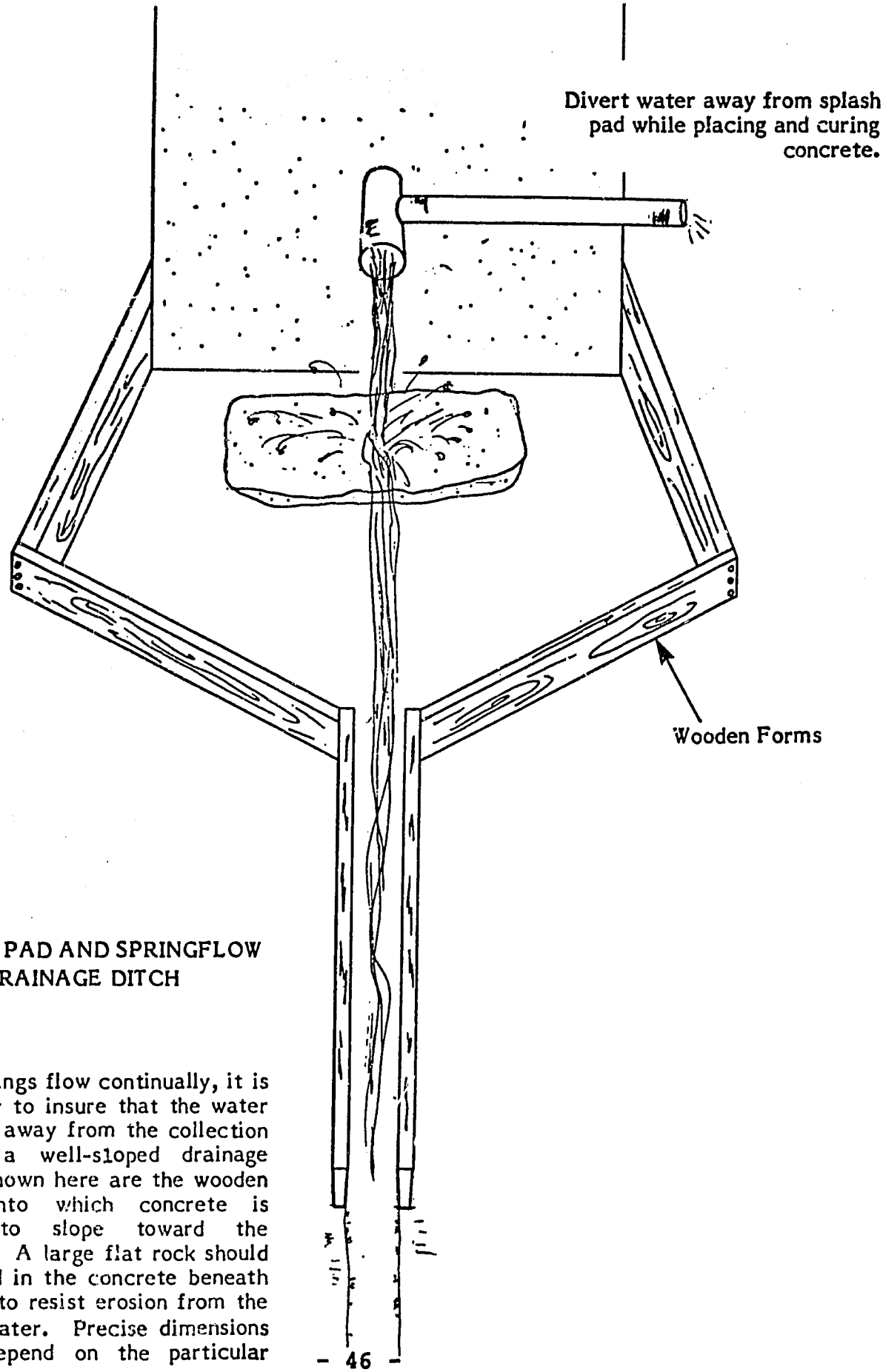

SPLASH PAD AND SPRINGFLOW DRAINAGE DITCH

Since springs flow continually, it is necessary to insure that the water will flow away from the collection site in a well-sloped drainage ditch. Shown here are the wooden forms into which concrete is placed to slope toward the drainage. A large flat rock should be placed in the concrete beneath the pipe to resist erosion from the falling water. Precise dimensions would depend on the particular spring.

CEMENT, CONCRETE, AND MASONRY

Adapted from: Handbook of Gravity Flow Water Systems, T.D. Jordan, UNICEF, Nepal, 1980.

INTRODUCTION

Just about all structures constructed in water supply projects require the use of cement: mortar for masonry, plaster for waterproofing, and concrete for floor slabs. Proper knowledge of how to select the best materials, how to organize cement-mixing procedures, and how to make efficient and economical use of cement is all essential to the trainee.

This chapter describes the various materials required for cement work, their properties, and important considerations. It will discuss masonry of brick and stone, and concrete slabs for floors and roofs. It will present organizational procedures, helpful construction tips, and mention some common problems.

DEFINITIONS AND TERMS

The common cement work vocabulary used in this chapter is listed here, with a brief explanation:

cement: serves as an adhesive, gluing together sand and stone. Typically, normal Portland cement is used: a gray powder, similar to flour.

mortar: a mixture of cement and sand in various proportions, depending upon desired strength. Used to cement together bricks or stones in masonry, and used to plaster walls for waterproofness.

concrete: a mixture of cement, sand, and aggregates (such as gravel or crushed stone) in various proportions. Can be poured to form slabs.

RCC: reinforced concrete. Concrete with reinforcing steel rods or bars embedded in it for additional strength and support. Wire screening may also be used.

rebar: reinforcing steel bars or rods, used in RCC or RF brick.

aggregate: small pieces of stone mixed with cement and sand to form concrete. Coarse aggregates may be gravel, crushed stone, or crushed brick. Fine aggregate is sand.

gravel: usually found along rivers and streams: small pebbles and stones, worn fairly smooth and rounded by the action of water.

crushed stone: large pieces of rock or stone broken down to aggregate size, by manual labor using sledge hammers.

crushed brick: pieces of broken-up brick.

CEMENT

Cement is a mixture of chalk or limestone and clay, which is fired and then ground into a fine powder. Additional materials may be added to impart certain properties to the cement (such as to make it quick setting, low-heat, rapid-hardening, etc.). Ordinary cement is a gray powder, commonly known as "Portland cement".

Properties of cement: Portland cement is used for ordinary construction projects. Cement mortar or concrete has high compressive (crushing) strength, but relatively low tensile (stretching) strength. When water is added to a mortar or concrete mixture, it forms a fluid mass which is easily worked and placed into position. Within an hour (depending upon temperature and mix) the cement begins to set, losing its plasticity. Within four hours it has finished setting and can no longer be worked. From the time that setting begins, the cement is undergoing a chemical hardening process which will continue for at least a year, although it hardens most rapidly during the first few days. For the purpose of spring capping construction, the required strength for continuing work is achieved in a week.

Hydration: When water is added to a dry cement mixture (for either mortar or concrete), it begins a chemical reaction with the cement known as "hydration". This reaction causes the cement to set and harden, giving off heat in the process. The rate of hydration is accelerated by heat and humidity, therefore cement will set and harden faster at warmer temperatures, and vice versa. (Freezing of cement completely kills the hydration reaction, which will not continue even if the cement is thawed out. The hydration reaction requires moisture, but the heat generated by hydration tends to cause evaporation of the moisture in the mix. Thus it is necessary to prevent the rapid drying-out of the cement, especially during the first few days. Once hydration ceases, the cement will gain no further strength.

Setting: When water is added to a cement mix, there is a period of about 30-60 minutes in which the mix is plastic and easily worked into position. However, after that period, the mix begins to set, becoming stiffer and stiffer. Within a few hours, the setting should be complete. Once setting has begun, the mix should not be disturbed or it will weaken. The onset of setting can be determined by pressing the blunt end of a stick or pencil into the mix: resistance to penetration will suddenly increase when setting begins.

Hardening: This is a process whereby the cement mix gains strength. Hardening begins as soon as setting begins, but continues for at least a year.

Both setting and hardening are influenced by temperature: heat accelerates the rates of both.

Curing: Curing is the process of keeping the cement mix properly wetted, to ensure that there is enough moisture for the hydration reaction to continue. It is especially important during the first few days after pouring a concrete mix, when the cement most rapidly gains its strength.

Packaging of cement: One liter of Portland cement weighs approximately 1.44 kg. Cement is typically factory-packed in bags of 50 kg each, so therefore

each bag should ideally contain nearly 35 l of cement. However, some cement is lost during shipping and portering. For practical purposes, the amount of cement per bag should be considered as follows:

burlap (jute) bags: 32 liters
paper bags: 34 liters

Storage of cement: Cement easily absorbs moisture from the air, and as a result loses strength during long periods of storage. Typical losses are as follows:

Period of storage	Loss of strength
3 months	20%
6 months	30%
12 months	40%
24 months	50%

When cement is stored at the project site, it should be stacked in a closely-packed pile, not more than 10 bags high (to keep the bottom bags from bursting). Close-packing also reduces air-circulation between the bags, which is good. The pile of cement should be raised on a platform above the floor. The room or storage shed should have as little air circulation as possible, and if a long storage period is anticipated, the pile should be further covered by plastic or canvas tarpaulins. Paper bags of cement will resist aging much better than burlap bags; therefore, paper bags should be on the outside of the pile, and the burlap bags should be the first used in construction.

Old cement will form lumps. All lumps should be screened out of the cement, and no lumps should be used which cannot be easily crumbled by the fingers. If old cement (i.e., field stored for more than six months) must be used, increase the amount of cement in the mix by one-half to one part (depending upon how lumpy it is).

WATER

Water in the cement mix serves two purposes: first, to take part in the hydration reaction of the cement; and second, to make the mix fluid and plastic enough so that it can be easily worked and placed.

Quality: Water that is fit for drinking is usually fit for mixing cement. Water unsuited for drinking may still be used, if tested as follows:

Using water of known suitability (i.e., drinking water), make 3 cakes of cement paste, each approximately 1-2 cm thick by 6 cm in diameter. At the same time, make 3 identical cakes using the unknown water. Comparing the two types, observe the setting time, the "scratchability" (using a fingernail) and strength after a few hours, 24 hours, and 48 hours. Only if both types of cakes are equally strong should the unknown water be used.

Quantity: Water is necessary for the hydration of the cement, but too much water added during mixing results in a weaker strength. The quantity of water generally needed to make the mix easily workable is much more than is needed

for the hydration reaction. Therefore, no more water should be added than necessary to make the mix easily workable. The ideal quantities of water depend upon the amount of cement in the mix, and approximate guidelines are given later.

Once the cement has finished setting, further addition of water does not weaken it. In curing concrete, this is a necessary action to prevent the surface of the slab from drying out too quickly.

SAND

Sand is used in both mortar and concrete (in the latter, it is sometimes referred to as "fine aggregate"). Proper sand is well-graded (i.e., containing grains of many sizes mixed together). Sand of a uniform size, such as beach sand or very fine sand, is not suitable (but can be mixed into coarser sands).

Sources of sand: Sand found in land deposits is known as "pit sand". Such grains are generally irregular, sharp, and angular. Sand carried by water, such as found along banks of rivers or lakes, is known as "river sand". Such grains are generally rounded and smooth, due to the action of water.

Both types of sand are suitable for cement work, so long as they are well-graded and clean.

Quality: Sand containing clay, silt, salt, mica, or organic material is not good, since such contaminants can weaken the strength of the cement if they are present in large quantities. There are easy field tests which can be conducted to determine the quality of a sand source:

a) A moist handful of the sample sand is rubbed between the palms of the hands. Suitable sand will leave the hands only slightly dirty.

b) Decantation test: a drinking glass (or other clear glass container) is half-filled with the sample sand, and then filled three-quarters-full of water. The glass is then shaken vigorously, and allowed to sit undisturbed for an hour or so. The clean sand will settle immediately, and the clay and silt will settle as a dark layer on top of the sand. The thickness of the clay/silt layer should not be more than one-seventeenth (6%) of the thickness of the sand.

Dirty sand can be washed by rinsing repeatedly with water.

Bulking of sand: Damp sand that contains up to 5-6% water will swell up and occupy a greater volume than if it were perfectly dry. This is known as "bulking". A moisture content of 5-6% can increase the volume by over 30%. Additional water content reduces the bulking, until the sand is saturated completely (saturated sand occupies nearly the same volume as it does when dry). Thus when using slightly damp sand, it is necessary to use an extra amount of sand in the mix if it is to be proportioned by volume. Very damp sand (such as freshly washed) is measured as if it were dry. If the mix is proportioned by weight, the bulking is of no consequence.

AGGREGATES

Aggregate is the general term for the material mixed with cement and water to form concrete. Sand is a fine aggregate, and large material is a coarse aggregate.

Coarse aggregates may be gravel (generally river-worn, rounded rocks) or crushed rock and brick.

Stones of granite, quartzite, basalt, or those with rough non-glossy surfaces are best. Hard limestones are good: soft sandstones are not. Limestones and sandstones are porous and therefore not good for water tank floor slabs, but can be used for roof slabs (the same applies for crushed brick).

Aggregates must be clean and well-graded. Smaller rounder aggregates (such as river gravel) are better for waterproof floor slabs.

Sizes of aggregates: Aggregates should be well-graded so that air voids between pieces are minimal. Largest sizes should be:

For roof slabs: 10 mm
For unreinforced or lightly reinforced slabs: 20-25 mm

Crushed brick: Pieces of broken-up brick may be used as aggregate in concrete, but due to their porous nature should not be used for floor slabs of water tanks. When crushed brick aggregate is used, the pieces should be thoroughly soaked in water prior to mixing, to prevent absorption of moisture from the mix (which will interfere with the hydration reaction).

REBAR REINFORCEMENT

Reinforcement of concrete is only needed for slabs which are large in area or which will be put under great hydrostatic pressure (i.e., deep water depth). An RCC slab can be thinner than a non-reinforced slab. The presence of the reinforcement helps to distribute the stresses and forces uniformly over the entire mass of concrete.

Reinforcing bar (rebar): Rebar is available in many sizes, but for typical water supply projects only the following diameters are needed: 6 mm, 8 mm, or 10 mm.

Wire-mesh screen (also known as "wire-mesh fabric"): Wire-mesh screen can also be used as reinforcement in slabs. The size of aggregate in the concrete mix should be smaller than the size of the mesh (using a piece of the screen to sift the aggregate is the best way of ensuring this).

Spacing of rebar: The spacing of the rebar must distribute the cross-sectional area of steel uniformly across the cross-sectional area of the slab. For a floor slab, the area of rebar must not be less than 0.225% of the total cross-sectional area of the slab, and for a RCC roof slab it must not be less than 0.30%. The following table can be used:

Type of slab	Thickness (cm)	Spacing of Rebar (cm) 6 mm	8 mm	10 mm
floor	8	15	30	40
roof	8-9	12	21	33
roof	9-11	10	17	27
roof	11-13	8	14	22
roof	13-15	7	12	19
roof	15-17	6	11	17

Placing of rebar: The reinforcement is made as a grid, with the size of the squares according to the table above. The rebar rods can be tied together with thin wire or string. The rebar must have a minimum of 3 cm of concrete covering. For a roof slab, the rebar is set 3 cm from the bottom of the slab, and for a floor slab the rebar is set 3 cm from the top of the slab.

The rebar must be securely fastened so that it cannot be shifted around while the concrete is being placed (the rebar can be supported on pieces of non-porous rock, but NOT brick or wooden stakes).

CEMENT MIXING

For convenience, it is usually easiest to mix cement at the construction site, so it is necessary to ensure that there is an organized system for delivering cement, sand, aggregates, stone or brick, and water. It is particularly important when mixing and pouring concrete that it be done in a continuous operation, without long delays caused by lack of materials.

Mixing pad: Cement should never be mixed on the ground. A mixing pad of brick, slate or concrete, or a wheelbarrow should be used. It should be large enough to allow mixing of convenient-sized batches, without overflowing: 1.5 square meters is adequate. If possible, build a small lip around three sides of the pad so that materials may not get accidently washed off.

Proportioning: Although the most accurate method of proportioning cement, sand, and aggregates is by weight, in a field site this is not so easy to arrange. The common method is to mix by volume, using a small bucket. Measuring by shovelfuls is not accurate. Mortar should be mixed in smaller batches than concrete, but no batch should be so large that it is not used in 30 minutes.

Dry-mixing: All ingredients are first thoroughly dry-mixed together, using shovels and trowels, until the mix is of a uniform color and consistency.

Wet-mixing: Water is added slowly, a small quantity at a time. Each time water is added, the mix is thoroughly "turned over" a few times with shovels. Water is added until the mortar or concrete is at the desired consistancy. The wet-mix can be adjusted as follows:

Too wet: add sand and cement or add aggregate

Too dry: add water

Too stiff: add sand

Too sandy: add cement

Tools and Manpower: A cement-mixing team should minimally have three persons: two for mixing, one for adding water and ingredients. Each team should have two shovels and two trowels, a small bucket (for measuring proportions) and a large bucket (for transporting the mix to the masons).

MORTAR

Cement mortar is used for masonry construction of walls and for plastering. Grout is used to cement rebar anchor rods into rocks and embed galvanized iron (GI) pipes into the masonry.

Typical mixes: Proportions of cement to sand, by weight or by volume:

Type of mortar	Cement:sand
Ordinary masonry	1:4
Reinforced brick roof slabs	1:3
Rough plaster	1:3
Final plaster	1:2

Volumes of mortar: The total volume of mortar is equal to the total volume of sand in the mix. The cement mixes with water to form a paste which fills in the voids in the sand. Thus, a 1:4 mix requires 100% sand and 25% cement; a 1:3 mix requires 100% sand and 33% cement, etc.

Quantities required to make one cubic meter ($1.m^3$) of various mortar mixes:

Mortar mix	Sand (m^3)	Cement (m^3)
1:4	1.0	0.25
1:3	1.0	0.33
1:2	1.0	0.50
1:1½	1.0	0.67
1:1	1.0	1.00

MASONRY

Because the masonry walls of the tanks are required to be as waterproof as possible against the hydrostatic pressure of the water inside, particular attention must be paid to the workmanship of the masons. It must be made clear to them that a masonry wall built the same as walls for their house is not adequate, and that the walls of the tanks must be carefully laid down according to directions.

Brick masonry: Bricks are usually locally manufactured and are of various shapes and quality. The exact dimensions of local bricks should be obtained for making the estimated requirements. The total volume of brick masonry is approximately 25% mortar and 75% brick. Bricks should be soaked in water for

several minutes prior to being used (this prevents them from absorbing too much moisture from the mortar), but they should not be soaked excessively.

Masons who are experienced at building houses with brick and mud mortar will be inclined to build tank walls in the same manner: laying down a bed of mortar, then placing the bricks tightly together on top of it, then laying down another mortar bed for the next course. The result is a network of unobstructed channels between the bricks where water will have easy leakage. Proper brick masonry for waterproof walls requires spacing the bricks one centimeter apart, and carefully filling in the joints with mortar. Bricks should be laid in patterns that do not result in a straightline joint from the inside to outside of the wall. Refer to Figure 1 for various points on brick masonry.

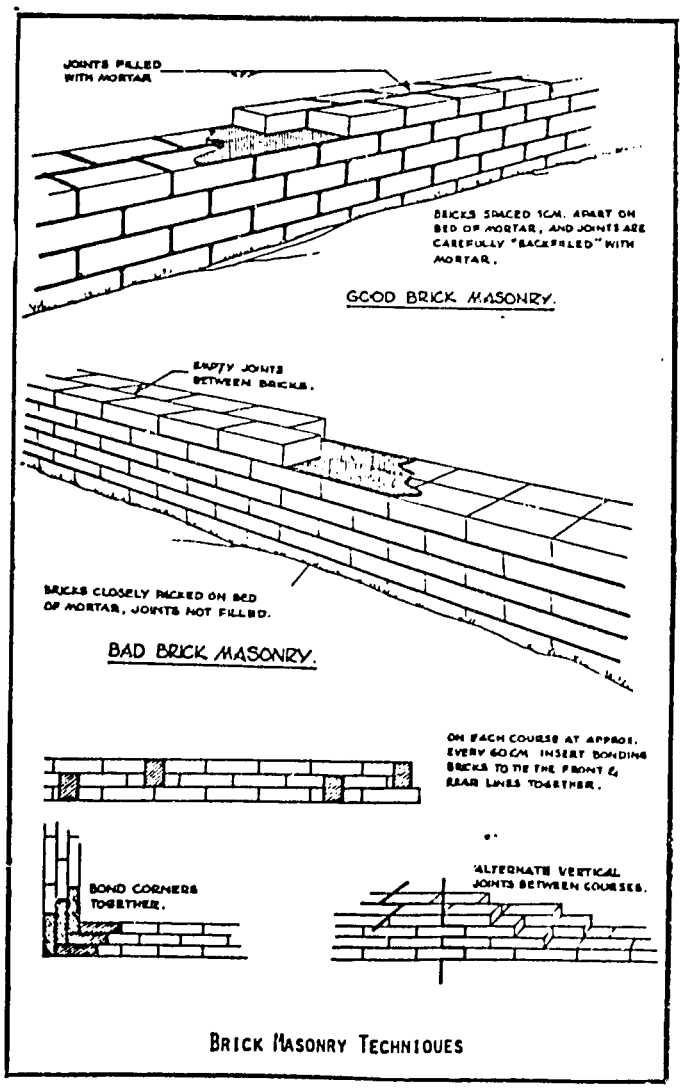

Figure 1: Brick Masonry Techniques

The top course of bricks should be completely clean and wetted before putting down the mortar bed for the next course. If the mortar on the top course has begun to set, the joints should be scraped down approximately one centimeter deep and refilled with fresh mortar. The walls should be built up evenly, so that the weight is distributed uniformly: no section of a wall should be more than 15 courses (approximately 1 meter) higher than the lowest section.

Once the mortar has set, the masonry should be wetted regularly (several times per day) for several days.

Dressed-stone masonry: Also known as "ashlar masonry". In this type of masonry, the stones are carefully cut to rectangular dimensions, making "stone bricks". Such masonry requires skilled masons, and much time and labor. Ashlar masonry is approximately 30% mortar and 70% stone.

Rubble-stone masonry: This is the most common type of masonry. The stones are roughly shaped by the masons. The stones should be lightly tapped down into the mortar, then securely fixed using mortar and pieces of crushed gravel. No stone should span completely from the inside to the outside of the wall. With this type of masonry, it is very easy to leave air voids between the stones, so care must be taken that this does not happen. For estimate purposes, this type of masonry is approximately 35% mortar and 65% stone.

Setting GI pipe: GI pipe is set into masonry walls on a bed of 1:1 or 1:1½ mortar. A minimum length of 30 cm of pipe should be embedded, and the more the better. Once the pipes have been placed, they must not be disturbed at all for several days. Building a protective dry-stone masonry wall will protect against accidental dislodgement (this can happen quite easily otherwise, for the worksite is the scene of much activity). The pipemouths should be plugged up to keep any mortar from accidentally falling into them.

CONCRETE

Concrete is used for pouring floor and roof slabs of tanks. The size and type of aggregates depends upon the purpose of the slab, its reinforcement, and its thickness.

Typical mixes: The following proportions are recommended for concrete, proportions by either weight or volume:

Normal RCC work (roof slabs):	1:2:4 (cement, sand, aggregate)
Waterproof slabs (tank floors):	1:1½:3

Concrete is proportioned and mixed as already discussed earlier.

Water: For the above mixes, the approximate amount of water needed is three-fourths part water per part of cement (1:3/4 cement: water) by volume.

Volumes of concrete: The total volume of the concrete mix is never less than the total volume of aggregates. Typically, air voids make up 50% of the aggregate volume, and these voids must first be filled by the mortar. Excess mortar then adds to the volume of the concrete.

For the above mixes, the following volumes of cement, sand, and aggregate are necessary to produce one cubic meter (1 m^3) of concrete:

Concrete mix	Cement (m^3)	Sand (m^3)	Aggregate (m^3)
1:2:4	0.25	0.5	1.0
1:1½:3	0.33	0.5	1.0

Segregation: This is the separation (due to gravity) of the aggregates in the concrete. The heavier aggregates will tend to sink to the bottom, and water will rise to the surface. The result is a poorly mixed concrete which will be weak. Segregation usually happens when the concrete is transported from the mixing pad to the work site; therefore, the mixing pad should be as close to the final pouring point as possible, and the concrete should be re-mixed with a trowel before pouring.

Placing the concrete: A bucket of concrete should never be dumped from any height since segregation of the aggregates will occur. Concrete should be placed in strips about 15-20 cm wide, never as piles (refer to Figure 2). If a fresh layer is to be put down on top of an earlier layer, then the second layer should be put down before the first has begun to set (within 30 minutes). Rough leveling of the concrete can be done, but extensive trowelling will cause the cement paste to rise to the surface of the slab.

Before it sets, the concrete must be thoroughly compacted.

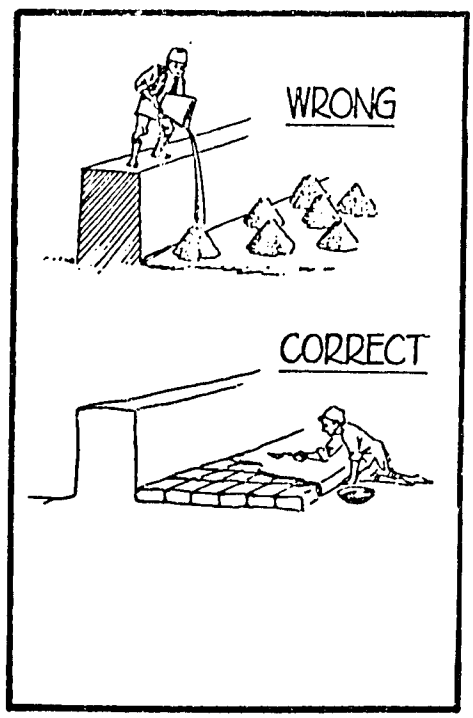

Figure 2. Placing Concrete

Compacting: This is the process of settling the concrete so that it contains no air voids. This is accomplished by "rodding" the concrete: poking a length of rebar into the concrete and stirring it up and down.

The concrete should be carefully rodded in all corners and around the reinforcement. Over-rodding, however, will cause segregation. After rodding,the concrete should be tamped level again, using a flat board of wood. Sprinkling loose cement on the surface of the slab (to absorb excess water) is not good: such a layer will easily crack, crumble, and powder.

Waterproofing floor slabs: A day after the concrete has been placed, a water proofing plaster may be put down. A mortar mixture of 1:1 proportions should be worked onto the surface of the slab with a wooden float. Only a thin layer of plaster is needed, just enough to seal the surface pores of the slab and smooth it over. Waterproofing compound can be added to the mortar.

Curing: After the concrete has set 8 to 12 hours, the floor slab should be flooded with a few centimeters of water. More than this will put too much hydrostatic pressure on the concrete, which may not be strong enough to support it. After one day, the water may be drained off for waterproofing (as described above), but once the waterproofing plaster has set it should be re-flooded and kept that way for several days (after three days, if all else is finished, the tank may be filled fully and put into service).

When the slab is first flooded, care must be taken that the discharge flow doesn't erode the fresh concrete.

If the slab is being poured over a period of several days, the surface of each section must be covered over with a tarpaulin and constantly wetted. This method must also be used for drying a roof slab.

Improper curing will allow the surface of the slab to dry out and shrink, while the interior mass remains unchanged. The resulting tensions will cause the surface to crack, reducing waterproofness. Too much loss of moisture will stop the hydration reaction, and no further strength will develop (even if the concrete is thoroughly flooded again).

PLASTERING

Plastering masonry walls adds to their waterproofness. Several thin coats of increasing richness (i.e., cement content) are better than one or two thick coats.

All walls will receive at least two coats of plaster, each 1 cm thick; and should be plastered at least 5 cm above the overflow level.

Rough coat: A mortar mix of 1:3, applied to the masonry. That coat is left with a rough surface.

Final coat: The final coat is a 1:2 mortar mix, which is finally troweled smooth and clean.

Only one coat of plaster per day should be applied.

Volumes of plaster: For a plaster coat 1 cm thick, the following quantities of cement and sand are needed for each square meter of plastered surface:

Plaster Mix	Cement (m^3)	Sand (m^3)
Rough coat (1:3)	0.0030	0.01
Final coat	0.0050	0.01

SMALL SLAB COVERS

Small RCC slabs (less than 100 cm square) can easily be made for spring capping.

For such slabs, the reinforcement is best done using large-mesh wire screen, but small size rebar can also be used.

A simple wooden form can be constructed. The rebar is firmly set in place, and short pieces of ½" GI or 20 mm HDP are fixed into position where the 3/8" bolts will pass through. Handles of wire or rebar should be tied to the reinforcement, so that the slab can be lifted.

The thickness of the slab should not be less than 5 cm, and not more than necessary to cover the rebar with 2.5 cm of concrete on both sides.

The concrete mix should be 1:2:4, with small-size aggregate small enough to fit through the mesh if wire screen is used.

After the concrete has been poured, the slab should be covered with sand and kept wetted for three days. After that time, if the form is needed to make more covers, the slab can be carefully removed from the form and kept in a shady place for several more days, being constantly wetted. Covering the slab with wet burlap (jute) sacking will help to keep it moist.

When the concrete has been cured for several days, the slab may be plastered with a 1:3 mortar, to give it a smooth, clean surface.

Figure 3 shows some details of the form and slab reinforcement.

COLD WEATHER CONCRETING

When cement work must be done where temperatures are expected to drop down to freezing levels, special precautions must be taken to protect the cement.

When concrete or mortar freezes, the hydration reaction is stopped permanently. Even when the cement is thawed and re-wetted, the chemical process does not resume, and the concrete develops no further strength than it had when it first froze.

Since the hydration reaction generates heat, the single best strategy is to insulate the cement work to prevent the loss of this heat; especially during the first two days (when the rate of heat loss would be highest).

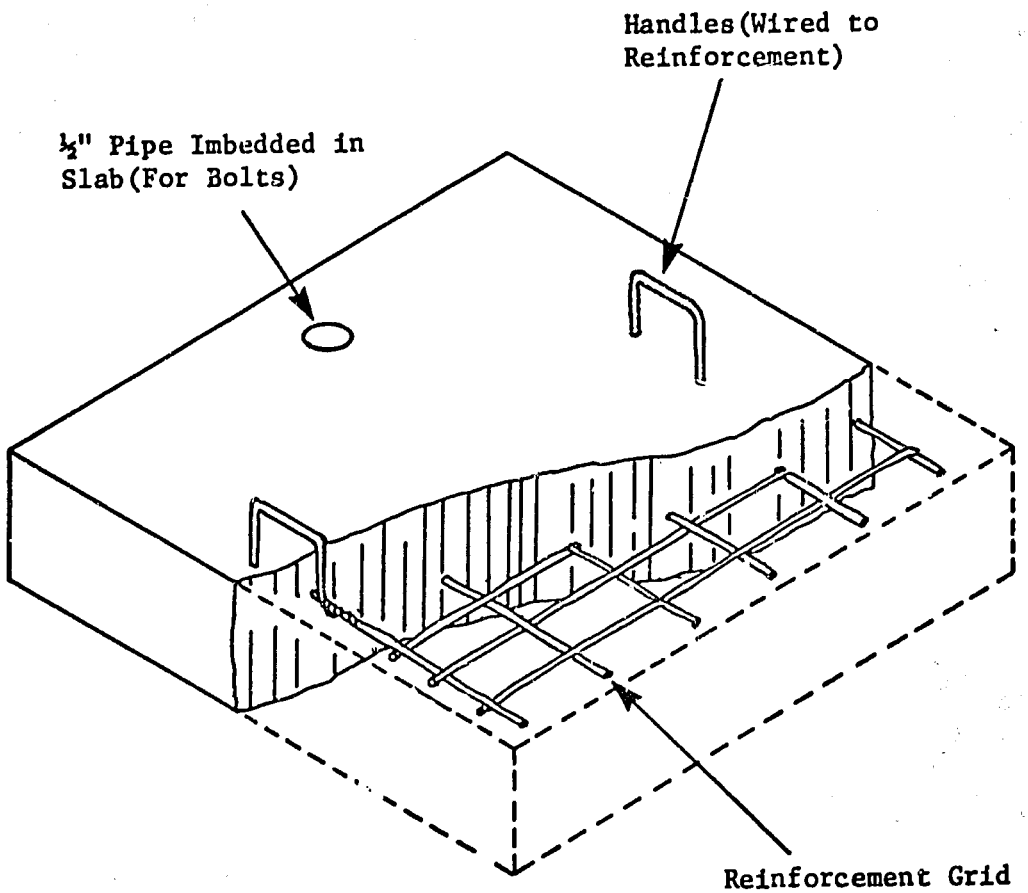

Figure 3
(Form and Slab Reinforcement)

Padding the cement work with straw and covering with mats or tarpaulins will be of special help. When the cement is re-wet (during curing), heated water should be used if possible. Protecting the cement work against the wind is extremely important, and all protruding rebar should be wrapped with cloth (since steel is an excellent conductor of heat, these would be major points of heat loss).

The setting and hardening of cement is temperature-dependent, and will proceed more slowly at lower temperatures. Increasing the amount of cement in the mix by 20-25% will help generate more heat and earlier strength. Heating the aggregates and using hot water for mixing will improve the setting time. The aggregate should not be heated hotter than can be touched by the hand, nor should the water be hotter than 140°F/60°C. Never heat the cement alone, or add hot water to the cement alone.

The freezing point of the mix may be reduced by dissolving salt into the heated mixing water. Salt is added by weight, and should not exceed 5% of the weight of the cement. Each percentage of salt lowers the freezing point by about 1.5°F (0.8°C), but salt cannot be used effectively for temperatures lower than 25°F (-4°C).

LECTURETTE NOTES: RETAINING WALL CONSTRUCTION

Rock and mortar wall construction may begin on the day following the foundation construction. The clay dam continues to pool and divert the spring flow from the construction area. Now, the height(s) or level(s) of the pipe(s) must be decided so that flow from the spring will be ensured during both the dry and wet periods. The pipe(s) will be placed in the wall at those levels as the wall is built. Remember water will constantly try to flow through the weakest points of the wall being built. These points are the bonds between the rock and mortar. Therefore, the wall must be made with strong, dense materials which water will not penetrate, such as concrete. Here is a series of steps to complete the task.

- Mix batches of strong mortar using one portion of cement, two portions of clean sand, and just enough water to make it workable, not soupy.
- Wet the rocks before placing them and surrounding them with mortar, in order to achieve the best possible bond between the rocks and mortar.
- Apply mortar surrounding the rocks.
- Select rocks to lay side by side in a row facing the spring. Place selected rocks into the fresh mortar and fill the spaces between the rocks with mortar. Select and lay the second (downstream) row adjacent to the first row so that they are behind the mortared joints of the upstream row.

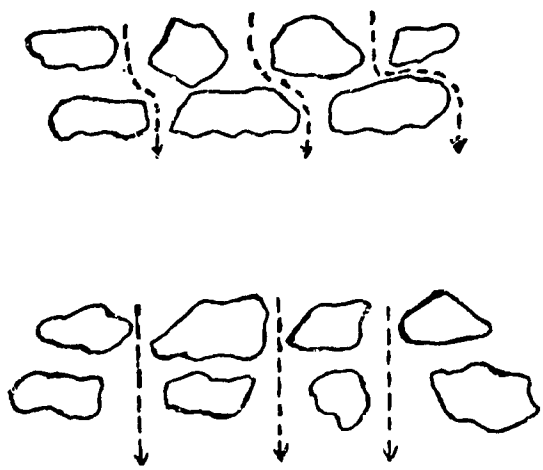

Place the next layer on top of the upstream row, centered on the mortar spaces in the row below: thus a vertical mortar joint does not continue to the next layer.

Follow these steps in laying the service pipes:

1. Locate a "plugged" pipe at the lowest level possible so it can be opened to drain the back of the retaining wall.

2. The number and diameter(s) of the service pipe(s) must be adequate to carry the spring flow. This can be determined by experimenting with the diverted flow and using the size guidelines below:

Maximum Spring Flow	Pipe Diameter
up to 1.0 lps	30 mm
1.1 to 3.0 lps	50 mm
3.1 to 7.0 lps	60 mm

3. Place the outlet pipe(s) so that it will be just at the level of the spring during the driest period of the year. Refer to Handouts 5-2 and 5-3.

4. The pipes should extend far enough for the convenient collection of water into a vessel, without being long enough for buckets to hang on or children to step on them and break them. All pipes should tilt slightly downward so the downstream end is lower than the upstream end.

5. The top of the retaining wall should be at least 20 cm above the outlet pipes. The spring flow may increase during the wetter seasons, thereby increasing the flow and the pressure against the wall. If the wall extends higher than 30 cm above the outlet pipes, then install an overflow pipe placed 20 cm above the service pipe to discharge excess flow and relieve the pressure.

CASE STUDY

Project History

Trickling Spring is a community which the community promoter selected some months ago, after doing a technical feasibility study and a social inventory, as a very likely community for a spring capping project. Many of the springs in the area have dried up. Trickling Spring's water remains constant. However, due to the use of the spring by animals and for laundry purposes, the spring water has become contaminated. A hole has been dug to capture the available water.

During the project development phase the community promoter had worked with a local health committee formed by a nearby health clinic nurse. The committee consisted of two school teachers, two community mothers, and three village elders. Most of the committee's activity and work was done by one of the school teachers and the two community mothers, all women. The village elders were on the committee to lend it prestige, but took little interest in it.

The spring did not produce a great deal of water but it supplied the needs of the Trickling Spring community. In addition, people came from a neighboring village (about an hour's walk away) to get drinking water. That community was not involved in the health committee. The project promoter was very busy most of the time and had no transportation, except the occasional use of a vehicle belonging to a regional engineer in the department of health. Otherwise she had to get transportation from whatever vehicle was going to the community. Because of this limitation, the promoter worked mostly with the health committee and did not get involved with others in the community. The people on the health committee were very trustworthy and respected people.

During the meeting with the committee when the project was explained and the community responsibilities were discussed, the committee assured the project promoter that the community was very interested in capping the spring. Several of the children had recently been very sick and the clinic nurse said it was because the spring was contaminated. When the spring produced very little water, the available water became very muddy in the hole that had been dug to collect it. The community agreed to collect a small sum of money from each village family every month for six months in order to pay for the project materials. They also agreed to provide all of the labor if the promoter could arrange for the Ministry of Health to pay for one half of the cost of a skilled mason and provide the technical direction for the spring improvement.

On this basis, the promoter requested and received project approval from her supervisor. The Ministry would purchase the needed materials and deliver them when the community had paid its share of the costs.

Current Situation

The committee has collected half of the community's contribution, but the community refuses to give any more. One vocal and well known family in the community maintains that it is unfair that Trickling Spring should have to pay for all of the costs of the spring capping when the neighboring community will receive the benefits as well. The nurse who formed the health committee has

been transferred to another clinic and the health committee does not meet anymore. The supervisor of the project promoter has threatened to send the construction materials to another community because he does not believe this project will work. He has given the promoter one month to make the project function and come up with the community contribution. Otherwise, he will abandon the project.

Discussion Questions

1. Analyze the case study and decide what you would do to salvage the situation.

2. Discuss and list the possible mistakes the project promoter has made and the things you would do to avoid these mistakes.

Be prepared to present your recommendations on the first two questions to the other small groups that are also doing this exercise.

EXAMPLES OF SPRING MALFUNCTION

Answer these four questions for each of the causes of spring malfunction which follow.

1. What is the problem(s)?
2. What might have caused it?
3. How would you repair it?
4. How could this have been prevented?

A. Flow from the pipe has dropped considerably. It is the rainy season, so you know it can't be drought.

B. Flow has diminished somewhat. You notice water is coming out from underneath the retaining wall.

C. You notice a crack has formed in the rock and mortar wall and the plastic PCV pipe is bending and deteriorating.

D. The villagers tell you the spring water isn't good anymore. They say the color and the smell have changed.

E. You notice a small stagnant pool of water is forming under the spring flow against the base of the wall.

F. The villagers tell you there isn't enough water to go around anymore. They complain about having to wait in lines to get water.

COMMON REPAIR STRATEGIES

- Reseal the interior face of the concrete or rock and mortar wall with mortar or clay to prevent leaks or failure.
- Repair the spring structure until it is level, at right angles, properly supported and securely connected to its different parts.
- Dig down into the sealed spring collection area to eliminate clogging; to deepen or realign channels for spring flow; to alter level of pipes; or to eliminate structural damage caused by roots.
- Provide a mortar patch between the spring flow and the foundation or deepen the foundation to prevent the spring from flowing under the retaining wall and/or foundation.
- Completely isolate the spring area from sources of contamination; i.e., eliminate a newly constructed latrine, install fencing to keep animals from destroying the natural earthen spring cover.
- Improve drainage to keep collection area dry and water away from the base of the wall and realign the splash pad to prevent the flow from eroding the ground.
- Replace or add overflow pipe(s) to relieve pressure from increased flow and/or install pipes at a lower level during dry periods to permit flow.
- Add a storage cistern to the spring cap structure in order to provide adequate water at peak collection times.
- Abandon the spring structure when the increased pressure of the spring collection pool forces the flow elsewhere or the spring water taste or quality is drastically altered.

USER TRAINING SESSION TOPICS

A. Water and Your Life

List/discuss uses of water.
What is the most important use of water for people in your community?
What kind of water can make people ill?
What happens when you drink water that is not clean?
Who gets sick most often?
What can you do so children don't get diarrhea often?

B. Collecting, Storing, and Using Water

What sources of water do people use in your community?
Which sources have the best water for drinking?
Some communities have clean water but children still get diarrhea. Why?
How do people in your community collect water?
How do people store water?
How can water get dirty?
What are some things a mother can do so her child gets clean water?

C. Using your New Capped Spring

Why is this spring a source of clean water?
What needs to happen to keep the water clean?
How can the spring be protected from damage?
What should be watched for that could mean the spring needs repairing?
Who should you report these repair needs to?

LECTURETTE NOTES: CLOSING THE SPRING

There are seven steps to closing the spring and finishing the site. They are:

1) Inspection of completed work

2) Repair or corrections on work completed

3) Disinfection

4) Sealing and backfilling excavated spring

5) Fencing

6) Spring cap cleanup

7) Presentation to guardian, health committee or villagers

Each of the points is discussed below

A. Inspection of spring cap structure, flow, and pipes

- Check the cured rock and mortar wall, foundation, clay wall and remaining structural components regarding alignment, damage, joints, leaks, cracks, connections, settling, sealing (watertight), leveling, and appearance.

- Check the support of retaining walls, earthen side walls, access steps, and drainage channels.

- Check quantity, i.e., liters per minute of flow. Has it changed substantially from earlier measurements?

- Check quality of spring water, i.e., taste, clarity, smell, etc.

- Check for protection and channelling of spring flow away from spring structure.

- Check connection and slope of pipe(s) from spring flow collection pool through wall to user's container.

- Check to see if water is flowing under or around places other than through the pipe.

2) Obviously, any problems discovered during inspection must be resolved before the spring is backfilled and closed.

3) Disinfection of a natural flowing system such as this capped spring is difficult. A storage container/tank or spring box has smooth interior surfaces which can be easily washed, disinfected and cleaned out; whereas a natural rock, sand, earth system may absorb and retain the bad tasting disinfectant and/or not be fully disinfected. Within a day's time, cleansing and clearing of disturbed muddy water will occur from the natural spring flow. However, the water should not be used or collected for drinking during this cleanup and closure period.

4) Sealing and backfilling excavated spring

Now the spring can be closed and protected by following these steps:

- Within the clay wall surrounding the spring flow, rocks and gravel should be spread over the entire excavated area to an even level at least 20 cm above the water in the collection pool. All of the holes between the rock channels and earth sides should be filled with small gravel until the water cannot be seen.

- Good quality clay should be placed on top of the rocks and gravel, tamped and puddled in four to five layers of 3 cm each for a total layer of 10-15 cm that will make a seal to prevent surface water (rain runoff) from seeping down through the soil into the collection pool. If a smooth layer of earth and sand is placed over the rocks and gravel to prevent puncture, a sheet of thick, durable plastic can be laid across the cover. This may be expensive and difficult to find but will certainly form a seal against surface water.

- Now, the remaining clean fill material from the excavation can be placed across the seal sloping downward from the excavation behind the retaining wall to the top of the retaining wall.

- A 20/25 cm layer of top soil will permit shallow-rooted plants to prevent erosion and improve the appearance of the newly constructed site.

- Large, flat rocks should be placed over the access holes to the pipe and spring-flow channels.

5) Fencing

A fence around the spring site will serve to protect the area from contamination by domestic and agricultural animals which can otherwise drink from the outlet pipe and foul the area. As discussed earlier in Session 2 (Handout 2-2), animals are one means of water supply contamination.

- A fence can be constructed with barbed wire on wooden posts, or made from wooden rails or a stone wall. The fence can be erected alongside the drainage diversion ditches, as shown in Handout 6-1.

- A good durable fence probably cannot be constructed during the training period of two weeks. However, the public health advantages of a fence should be explained to the trainees, who should encourage fence construction in their own projects.

6) Spring cap cleanup

The following can influence feelings of ownership, convenience, responsibility, and pride in the newly improved spring site.

- Removal of piles of dirt and construction materials from the excavation site

- A dry, clean, smooth area with a durable splash pad beneath the pipe for collecting water.

- A hazard-free route from the village to the spring area, possibly including steps and pathways

- The location of a laundry pad below the collection area where water is convenient, the area is not muddy, and wash water can drain readily without affecting the spring. Laundry pads should be covered with a smooth stone since concrete will eventually wear out clothes.

7) Presentation to guardian, health committee, and villagers

- Explain the basic construction and operation of capped spring.

- Demonstrate the importance of users safeguarding and maintaining the quality of the water from the time they collect it until they drink it.

- Explain who can be contacted for repairs and technical assistance.

- Celebrate and drink the water together!

COMPLETED SPRING SHOWING EARTH COVER

SLOPE (maximum pitch - 2 horizontal to 1 vertical)

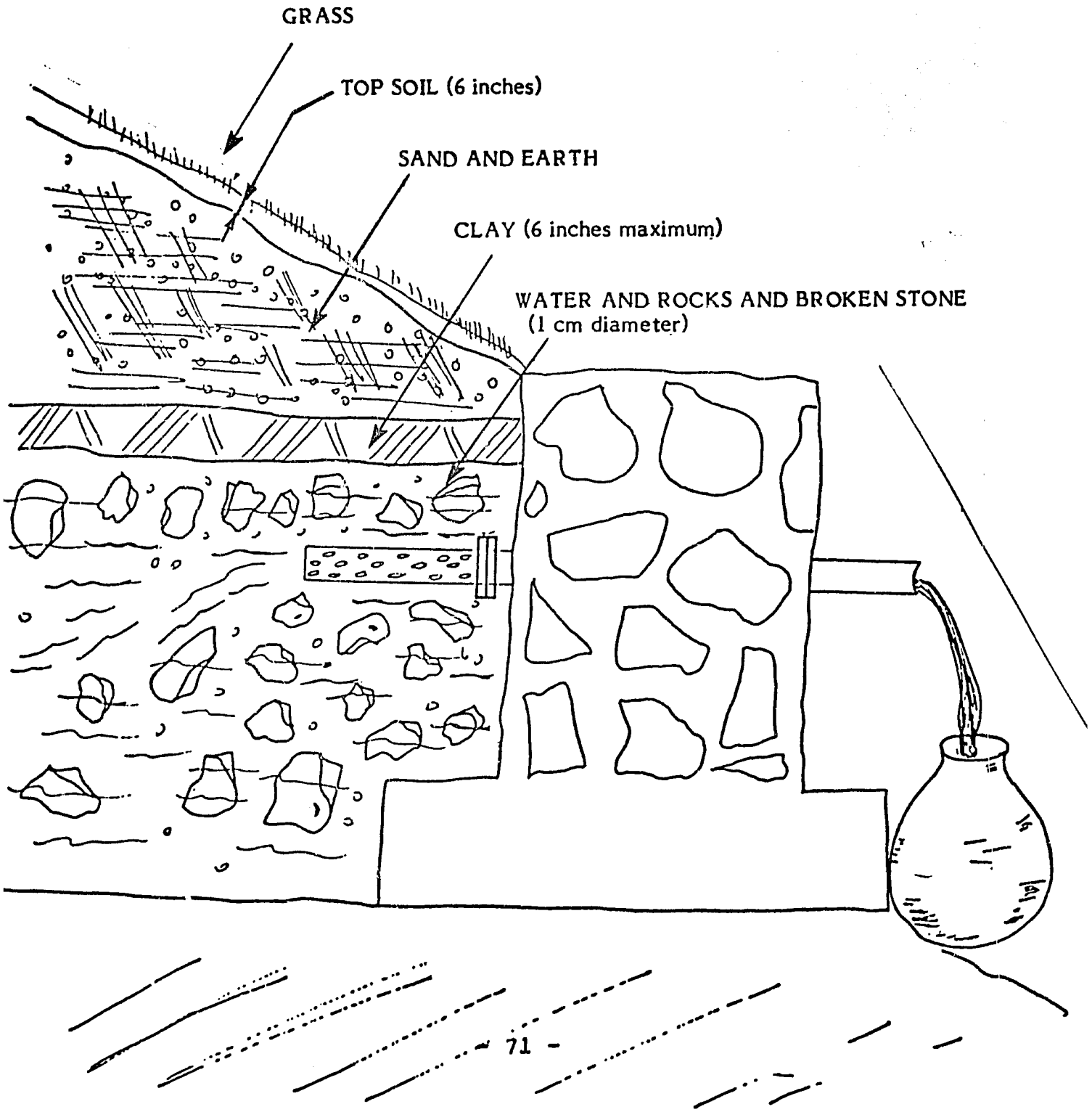

THREE PLANNING TASKS

Planning Task A

Your group is to organize and plan for the labor force needed to complete the construction phase of this project. Use your construction guides for the information you need. Your trainers are to serve as consultants to all three groups. Organize the help you want and the questions you have for the consultants so that you are able to use your consultant's time wisely. You can use up to 10 minutes of consultant time, either all at one time or on two different five-minute occasions.

The points your group should address are:

- What labor must be performed?
- What skills are required?
- What type of workers are needed (i.e., masons, carpenters, laborers, etc.)? How many?
- How would you recruit them?
- Approximately how long would each be needed (how many days or half days)?
- Approximately how much will this cost?
- How much of your time as project manager will it take to put this work team together?

Planning Task B

Your group is to organize and plan for the materials and tools needed to complete the construction phase of this project. Use your construction guides for information you need. Your trainers are to serve as consultants to all three groups. Organize the help you want and the questions you have for the consultant so that you are able to use your consultant's time wisely. You can use up to 10 minutes of consultant time, either all at one time or on two different five-minute occasions.

The points your group should address are:

- What materials are needed?
- Where can they be obtained?
- How will they be transported?
- How much will this cost?

- What substitutions could be made if the materials aren't available?
- What tools are necessary?
- Where can you get them?
- How much will they cost?
- How will you arrange for storage of materials and tools?
- How much of your time as project manager will the securing of labor and materials take?

Planning Task C

Your group is to organize a work plan needed to complete the construction phase of this project. Concentrate on scheduling activities and estimating how long each will take. Use your construction guides for information you need. Your trainers are to serve as consultants to all three groups. Organize the help you want and the questions you have for the consultant so that you are able to use your consultant's time wisely. You can use up to 10 minutes of consultant time, either all at one time or on two different five-minute occasions.

The points your group should address are:

- What are the activities required to complete the construction phase?
- In what sequence are they performed?
- Approximately how long will each activity take?
- What might you expect that could interrupt or delay this plan?
- How will you plan to handle delays?
- What does the project manager have to do to get ready for these construction activities? How long will it take?

CHECKLIST FOR EVALUATING A SPRING CAPPING PROJECT

Name _____

Date _____

Spring _____

1. Is the spring flow adequate for the users?

2. Is the spring cap design satisfactory? (Is it sanitary, useful, and attractive in appearance? Is it a source of community pride?)

3. Is the structure sound and solid?

4. Were the materials adequate and effective? Was there maximum use of local materials?

5. Was the labor force adequate? Who worked?

6. How much did the project cost? Who paid for it?

7. Was community participation adequate?

8. Is the spring flow drainage operating satisfactorily and is it maintainable?

9. Is the spring protected from contamination and surface waters?

10. Will the villagers reserve this spring for drinking and cooking water and do their laundry and water their animals elsewhere?

11. Does the water quality satisfy the users? (Taste, clarity, etc.)

12. Is someone responsible for maintenance?

13. Are the villagers aware of the benefits of keeping the water pure while they carry, store, and use it at home?

14. Is the spring convenient to use?

15. Are the users satisfied?

16. Does the improved spring area look nice?

17. Other comments.

Water for the World

Designing Structures for Springs

Technical Note No. RWS. 1.D.1

Protective structures are a very important part of developing springs as sources for a community water supply. A properly designed protective structure ensures an increased flow from the spring. To protect the spring, silt, clay and sand deposited at the spring outlet, and other material washed down from the slope by surface run-off, must be cleared away. When these materials are removed, water flow increases. Clearing away vegetation from the spring effluent will also allow better flow. A protective structure will improve the accessibility of the water. By channeling the spring flow into one collection area, a good quantity of water can be stored for the community. Spring water can be distributed to community standpipes or to individual houses. A third benefit of a protective structure is that it protects the spring water from contamination.

This technical note discusses the design of structures used to protect and develop springs for community water supplies and makes suggestions for spring development in a specific area. The design chosen for a particular project will depend on local conditions, materials available and spring yield. Read this entire technical note and refer to "Selecting a Source of Surface Water," RWS.1.P.3, before choosing a design that will best meet a community's needs.

The design process should result in the following three items which should be given to the construction supervisor:

1. A map of the area. Include the location of the spring; the locations of users' houses; distances from the spring to the users, elevations, and important landmarks. Figure 1 is a map of a small village with a spring located on high ground above it. A map of this type is useful in helping the people building the spring box locate the spring site.

Useful Definitions

DISCHARGE - The flow of water from an opening in the ground or from a pipe or other source.

EFFLUENT - At a spring site, the point from which water leaves the ground.

GROUT - A thin mortar used to fill chinks, as between tiles.

HEAD - Difference in water level between the inflow and outflow ends of a system.

HYDRAULIC GRADIENT - The measure of the decrease in head per unit of distance in the direction of flow.

MORTAR - A mixture of cement or lime with water in a basic proportion of 4 units of sand to 1 unit of cement or lime.

PERPENDICULAR - Exactly upright or vertical; at a right angle to a given line or plane.

PUDDLED CLAY - A mixture of clay with a little water so clay is workable.

REINFORCING ROD - Steel bars placed in concrete structures to give it tensile strength.

UNDERFLOW - Flow of water under a structure.

2. A list of all labor, materials and tools needed as shown in Table 1. This will help make sure that adequate quantities of materials are available so construction delays can be prevented.

3. A plan of the spring box with all dimensions as shown in Figure 2. This plan shows a top, side, and front view, and the dimensions of a cover for a spring box 1m x 1m x 1m.

Table 1. Sample Materials List

Item	Description	Quantity	Estimated Cost
Labor	Foreman	____	____
	Laborers	____	____
Supplies	Portland cement	____	____
	Clean sand and gravel, if available, or locally available sand and gravel	____	____
	Water (enough to make a stiff mixture)	____	____
	Wire mesh or reinforcing rods	____	____
	Galvanized steel or plastic pipe (for outlets, overflow, and collectors)	____	____
	Screening (for pipes)	____	____
	Boards and plywood (for building forms)	____	____
	Old motor oil or other lubricant (for oiling forms)	____	____
	Baling wire	____	____
	Nails	____	____
Tools	Shovels and picks (or other digging tools)	____	____
	Measuring tape or rods	____	____
	Hammer	____	____
	Saw	____	____
	Buckets	____	____
	Carpenter's square or equivalent (to make square edge)	____	____
	Mixing bin (for mixing concrete)	____	____
	Crowbar	____	____
	Pliers	____	____
	Pipe wrench	____	____
	Wheelbarrow	____	____
	Adjustable wrench	____	____
	Screwdriver	____	____
	Trowel	____	____

Total Estimated Cost ____

General Construction Steps

Follow the construction steps below. Refer to the diagrams noted during the construction process.

1. Locate the spring site and with measuring tape, cord and wooden stakes, or pointed sticks, mark out the construction area as shown in Figure 3.

2. Dig out and clean the area around the spring to ensure a good flow. If the spring flows from a hillside, dig into the hill far enough to determine the origin of the spring flow. Where water is flowing from more than one opening, dig back far enough to ensure that all the water flows into the collecting area. If the flow cannot be channeled to the collection area because openings are too separated, drains will have to be installed. Information on the installation of drains appears in the section on the development of seep collection systems.

Flow from several sources may be diverted to one opening by digging far enough back into the hill. When digging out around the spring, watch to see if flow from the major openings increases or if flow from minor seeps stops. These signs indicate that the spring flow is becoming centralized and that most of the water can be collected

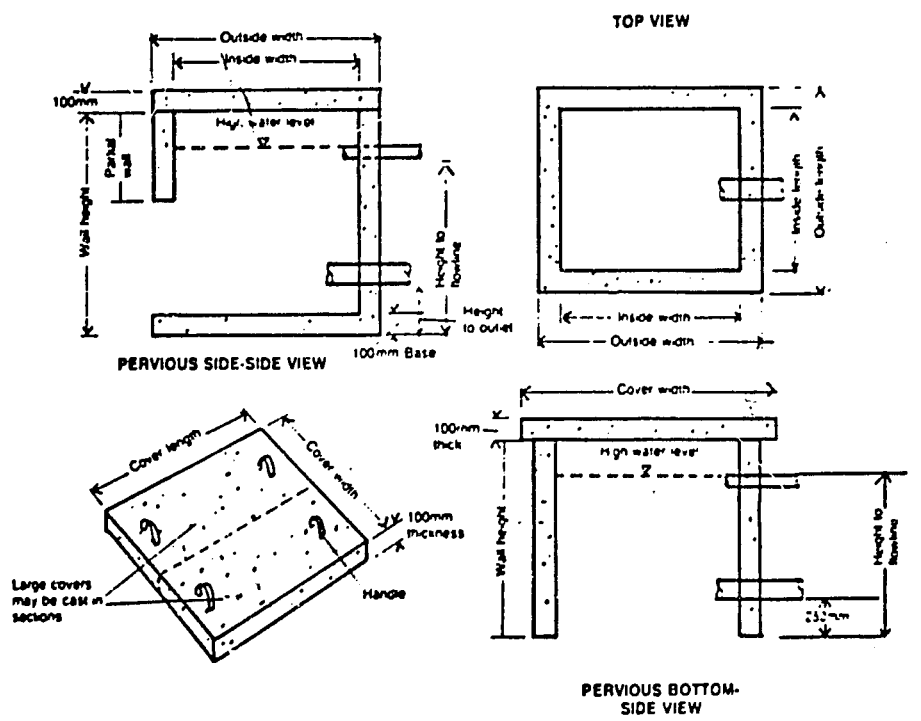

Figure 2. Spring Box Design

from one point. The goal is to collect all available water from the spring. It is generally easier to collect water from one opening than from several.

Dig down deep enough to reach an impervious layer. An impervious layer makes a good foundation for the spring box, and provides a better surface for a seal against underflow. If an impervious layer cannot be reached, attempt to construct the box in the most impermeable soil you can find.

3. Pile loose stones and gravel against the spring before putting in the spring box. The stones serve as a foundation for the spring box and help support the ground near the spring opening to prevent dirt from washing away. They also provide some sedimentation. For fast flowing springs, large stones with gravel between them should be placed around the spring to prepare a good solid base. Figure 4 shows an example of gravel and stone placed between the spring box and the spring.

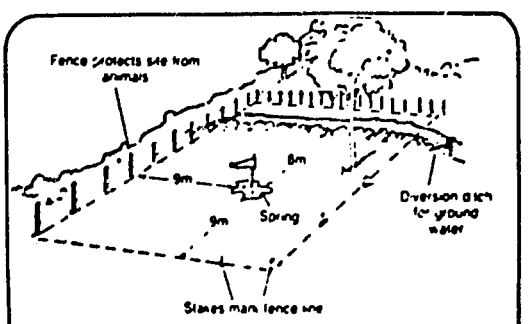

Figure 3. Preparation of Spring Box Site

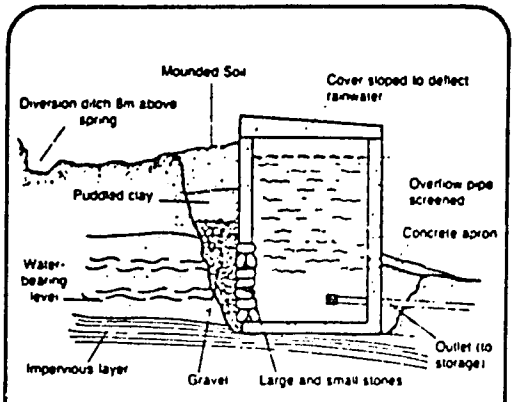

Figure 4. Spring Box with Open Side

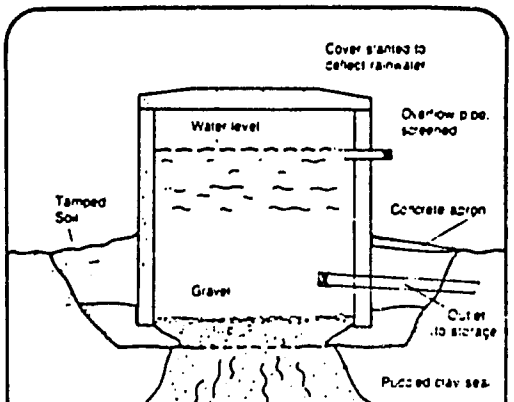

Figure 5. Spring Box with Open Bottom

If a spring flows from a single opening on level ground, dig out around the opening to form a basin. Be sure to dig down to impervious material to form the base. Line the basin with gravel so that the water flows through it before it enters the spring box. This is shown in Figure 5.

4. Approximately 8m above the spring site dig a trench for diverting surface run-off. The trench must be large enough to catch surface flows from heavy rains. If large stones are available in the construction area, use them to line the diversion trench to increase the rate of run-off and prevent erosion.

5. Mark off an area about 9m by 9m for a fence. Place the fence posts 1m apart and string the fence. A fence is useful to prevent animals from frequenting the spring site.

Concrete Construction Steps

In order to have a strong structure, concrete must cure at least seven days. Strength increases with curing time. Therefore, construction of the spring box should begin at the site during the first day of work. If the concrete is poured on the first day, seven days will be available for site preparation before the spring box is put in place. Be sure that all tools and materials needed to build the forms and mix the concrete are at the construction site.

1. Build wooden forms. Cut wood to the appropriate sizes and set up the forms on a level surface. The outside dimensions of the forms should be 0.1m larger than the inside dimensions. A form with an open bottom should be built for a spring flowing from one spot on level ground. For springs from hillsides, a spring box form with a partially open back must be constructed as shown in Figures 6 and 7. The size of the opening depends on the area which must be covered to collect the water. When building forms for a box with a bottom, be sure to set the inside forms 0.1m above the bottom for the floor. This is done by nailing the inside form to the outside form so that it hangs 0.1m above the floor. Make holes in the forms for the outflow and overflow pipes. Place small pieces of pipe in them so that correctly sized holes are left in the spring box as the concrete sets. A form for the spring box cover must also be built. Build all forms at the site.

Forms must be well secured and braced before pouring the concrete. Cement is heavy and the forms will separate if the bracing is not strong enough. One useful method is to tie the braces together with wire as shown in Figures 6 and 7. Drill holes in the forms and place wire through them. Using a stick, as shown, twist the wire to tighten it and force the forms together.

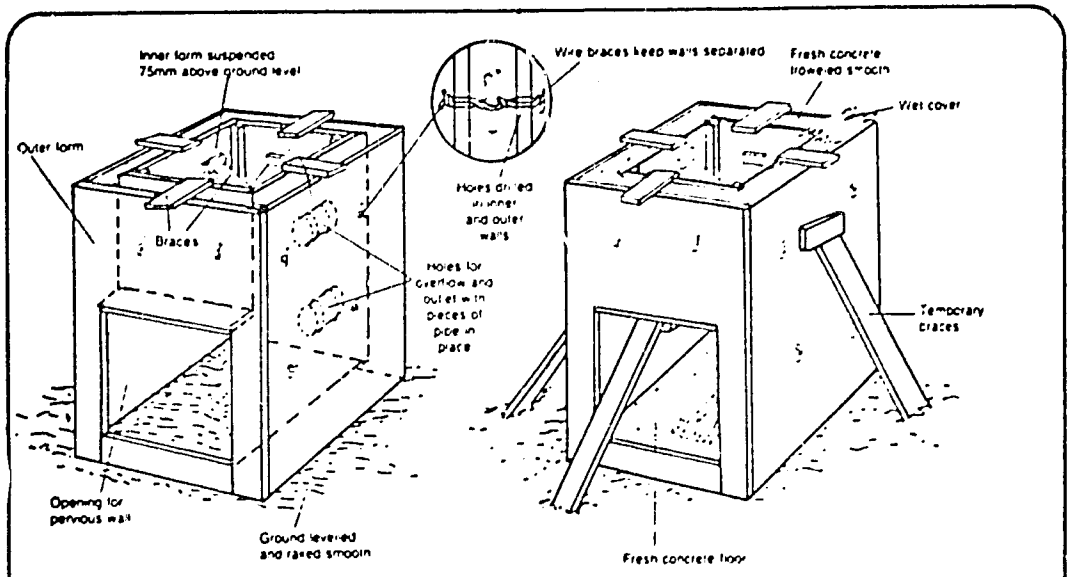

Figure 6. Forms for Spring Box with Open Sids

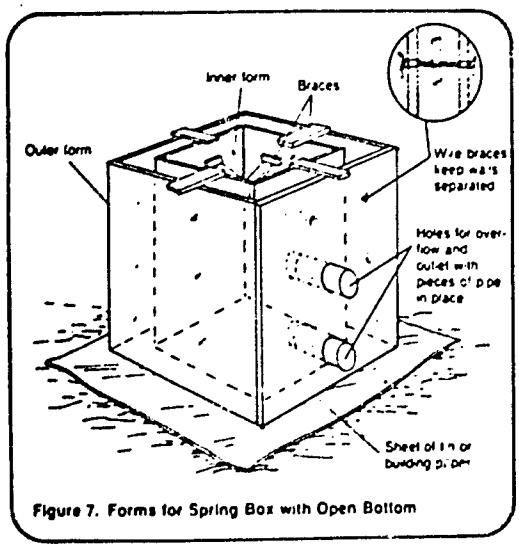

Figure 7. Forms for Spring Box with Open Bottom

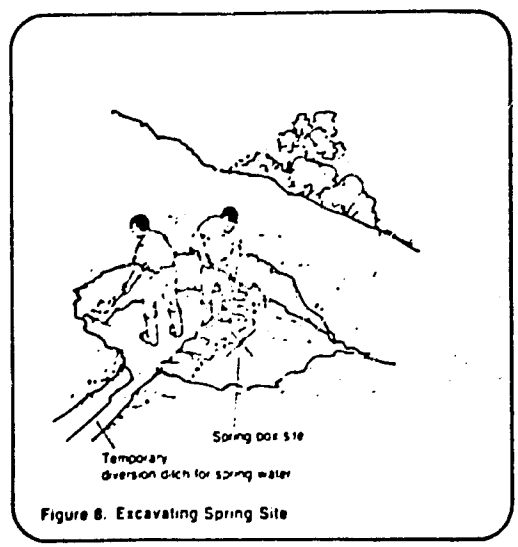

Figure 8. Excavating Spring Site

2. Set the forms in place. They should be either at the permanent site of the spring box or nearby so it will not be difficult to move the completed structure. If the forms are set and concrete is poured at the permanent site, water must be diverted from the area. This usually can be done easily by digging a small diversion ditch, as shown in Figure 8. Make sure that no water reaches the forms so that the concrete can cure.

If water diversion is difficult, build the forms and pour concrete on a level spot very near the spring. Once the concrete dries, remove the forms and set the completed structure in place. This will require six to eight people.

3. Oil the forms. Put old motor oil on the wooden forms so the concrete will not stick to them.

4. Prepare the reinforcing rods in a grid pattern for placement in the forms for the spring box cover. Make sure there is 0.15m between the parallel bars and that the rods are securely tied together with wire. Then position the reinforcing rods in the form. See Figure 9 for an example of reinforcing rod placement in the spring box cover. Major reinforcing is not needed for the spring box walls but some minor reinforcing around the perimeter of the walls is good to prevent small cracks in the cement. Four bars tied together to form a square should be placed in the forms.

5. Mix the concrete in a proportion of one part cement, two parts sand and three parts gravel (1:2:3). Add just enough water to form a thick paste. Too much water produces weak concrete. In order to save cement, a mixture of 1:2:4 can be used. This mixture is effective with high quality gravel.

6. Pour the concrete into the forms. Tamp the concrete to be sure that the forms are filled completely and that there are no voids or air pockets that can weaken it. Smooth all surfaces. Smooth the concrete for the spring box cover so the middle is a little higher than the sides (convex shape), as shown in Figure 10. This will allow water to run off the cover away from the spring box.

7. Cover the concrete with canvas, burlap, empty cement bags, plastic, straw or some other protective material to prevent it from losing moisture. The covering should be kept wet so water from the concrete is not absorbed. If concrete becomes dry, it no longer hardens, its strength is lost, and it begins to crack. Keep the cover on for seven days or as long as the concrete is curing.

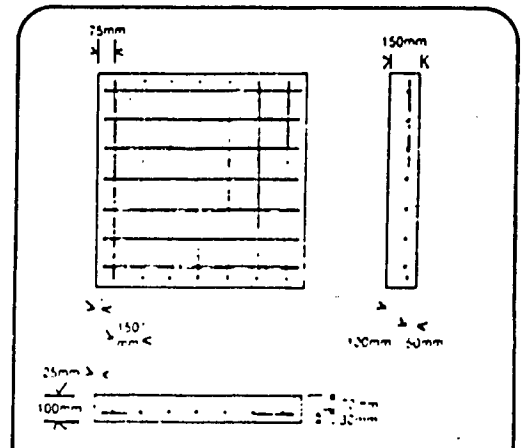

Figure 9. Placement of Rebar in Concrete Slab

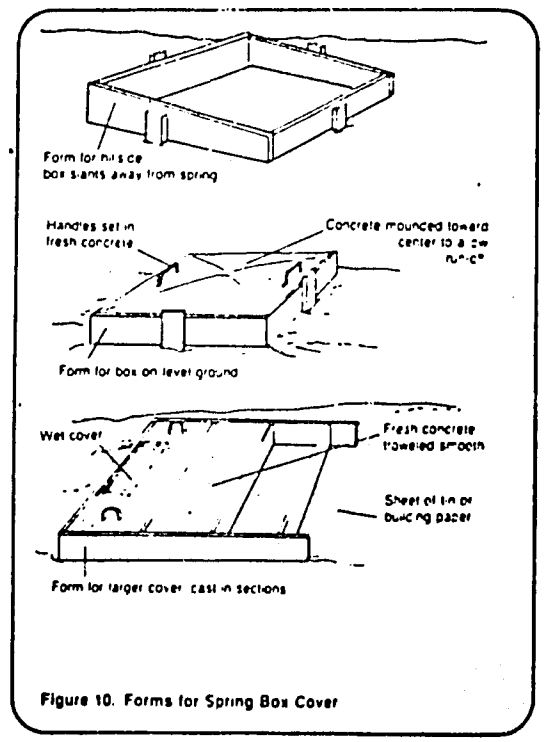

Figure 10. Forms for Spring Box Cover

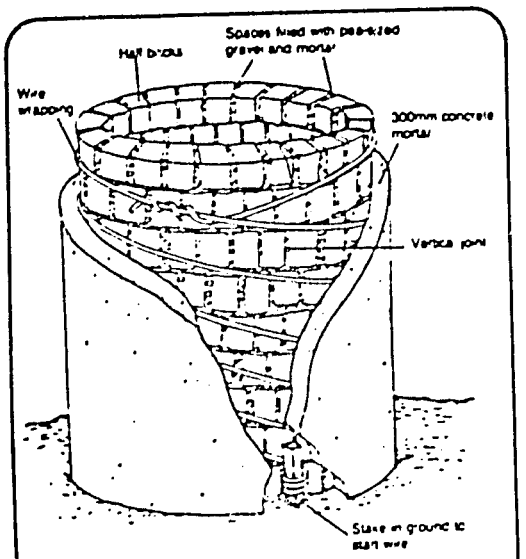

Figure 11. Brick Spring Box

8. Let the concrete structures set for seven days, wetting the concrete at least daily. After seven days, the forms can be removed and the box can be installed.

When constructing a masonry ring to protect a spring, follow the construction steps listed below.

1. Mark out a circle on the ground the diameter of the proposed masonry ring.

2. Using half bricks, place a circle of brick around the outside of the ring. Whole bricks broken in half or broken bricks can be used for the structure. In some places, broken bricks are available free.

3. Fill the spaces between the bricks with pea gravel and mortar mixed in a proportion of 1 part cement to 3 parts sand. As mortar is applied, add the next line of bricks. Be sure the vertical joints do not line up.

4. When reaching the desired height, strengthen the structure using baling, barbed or any available wire. Put a stake in the ground next to the ring and attach the wire to it. Wrap the wire around the ring several times as shown in Figure 11. Once the wire is wrapped around, secure and cut it.

5. Mix mortar in the proportion of 1 part cement to 3 parts sand. Cover the outside of the ring with a layer of mortar. The layer should be thick enough to cover the wire completely.

6. A circular cover should be built. Follow the same techniques as for the construction of concrete spring box covers.

Installing a Spring Box

The spring box must be installed correctly to ensure that it fits on a solid, impervious base and that a seal with the ground is created to prevent water seeping under the structure.

1. Place the spring box in position to collect the flow from the spring. If the flow comes from a hillside, the back of the spring box will be open. Stones should be placed at the back of the box to provide support for the structure and to allow water to enter the spring box. Figure 4 shows the placement of open-jointed rock in a completely installed spring box on a hillside. On level ground, be sure that the spring box has a solid foundation of imprevious material. Place gravel around the box or in the basin so that water flows through it before entering the box.

2. Seal the area where the spring box makes contact with the ground. Use concrete or puddled clay to form a seal that prevents water from seeping under the box.

3. Be sure that the area where the spring flows from the ground is well lined with gravel, then backfill the dug out area with gravel. The gravel fill should reach as high as the inlet opening in the spring box so that the water flowing into the structure passes though gravel. In Figure 4, the gravel layer reaches the same level as the open stone wall. For spring boxes on level ground, gravel backfill is unnecessary.

4. Place the pipes in the spring box. Remove the pipe pieces used to

form the holes and put in the pipe needed for outflow and overflow. On both sides of the wall, use concrete to seal around the pipes so water does not leak out from around them. Place screening over the pipe openings and secure it with wire.

5. Disinfect the inside of the spring box with a chlorine solution. Before the spring box is closed, wash its walls with chlorine. Follow the directions for disinfection in "Disinfecting Wells," RWS.2.C.9.

6. Place the cover on the spring box.

7. Backfill around the area with puddled clay and soil. On a hillside, place layers of puddled clay over the gravel so that they slope away from the spring box. The clay layer should nearly reach the top of the spring box and should be tamped down firmly to make the ground as impervious as possible. If only soil were used for backfill, it would have to be as least 1.5-2m deep so that contaminated water could not reach the gravel layer. For springs on level ground, clay should be placed around the box. The clay foundation should slope away from the spring box so that water runs away from the spring outlet.

8. Backfill the remaining areas with soil to complete the installation.

Constructing Seep Collection System

Sometimes springs flow from many openings over a large area. To collect the water, a system of collectors made of perforated pipe, an anti-seepage wall, and a spring box must be built.

The collectors must extend on both sides of the spring box and anti-seepage wall. Figure 12 shows an example. To install collectors dig trenches into the water-bearing soil until an impervious layer is reached. In this way, water is taken from the deepest part of the aquifer and most of the available water can be collected. The trenches should extend the necessary length for collecting all available water and should be about 1m wide.

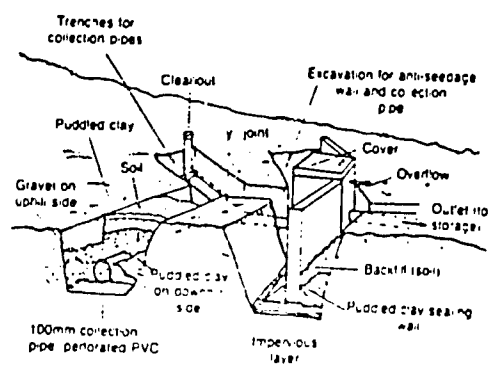

Figure 12. Seep Collection System

Lay 50-100mm diameter plastic perforated pipe or 100mm clay pipe in the trenches. Perforations in the plastic pipe should be about 3mm in diameter. On the uphill side of the trench, place enough gravel to cover the pipe. On the downhill side, build up a small clay wall to support the pipe. The pipe should have a 1 percent slope (0.01m slope per 1m distance) toward the point of collection. Flexible plastic tubing with slots already formed should be used if available. It is light and can be cut with a handsaw.

Clean-out pipes should be installed in the collection system. Attach lengths of pipe to the ends of the collection pipes. At the end of the clean-out pipes, place an elbow joint to which a vertical length of pipe is connected as shown in Figure 12. The pipe extends above ground level and is capped.

The next step is to build a concrete or impervious clay cutoff or anti-seepage wall. Dig down to an impervious layer for a good foundation. Make the forms for the cutoff wall 0.15m thick. Figure 13 shows a concrete cutoff wall 1.2m long and 0.9m high. Follow the same procedures for constructing the cutoff wall as for the spring box. There must be a good seal between the wall and the ground so that no water seeps underneath. Water must be

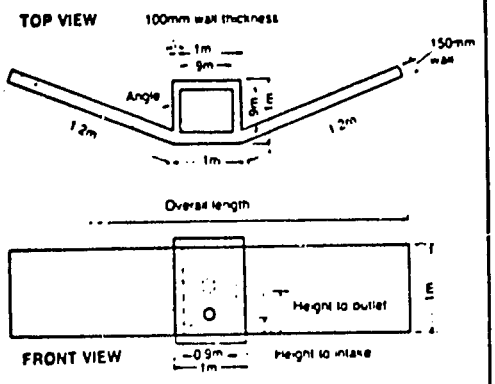

Figure 13. Anti-Seepage Wall and Collection Box

directed into the trenches and collectors. A small spring box can be built at the inside angle of the winged-wall with the wall forming two sides. If a spring box is built, the forms must be set at the same time as the cutoff wall. Water must be diverted from the construction area by small ditches for the seven days needed for the concrete to dry. Forms must be well braced and have holes for the inflow and outflow pipes as shown in Figure 14. Always pour the seep collection wall and spring box in place. The structure will be much too heavy to move after casting.

When using clay, be sure to remove any debris from the site and tamp the clay well so that the small dam or wall does not let water seep through. The clay walls should be built like walls of a dam with a 2:1 or 3:1 slope. Put

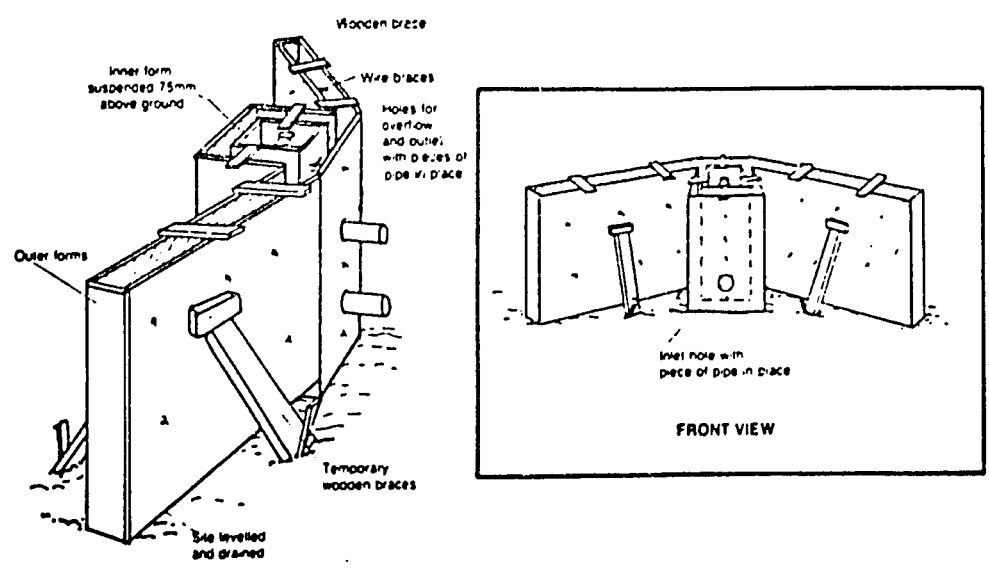

Figure 14. Forms for Anti-Seepage Wall and Collection Box

the clay down in layers 150mm thick and tamp each layer down well to ensure good compaction. Keep the clay moist. Lay and tamp each 150mm layer until the maximum height is reached. The walls should be well bonded to the spring box.

The construction of a seep collection system is more difficult and expensive than a simple spring box. Installation of collectors requires more work and some experience. Once the collectors are installed, however, the construction of the seep cutoff wall is no different from spring box construction. The same steps must be followed, the same mixture of concrete used and the same general rules for curing concrete and for placement must be followed.

Water for the World

Constructing Structures for Springs

Technical Note No. RWS. 1.C.1

There are two important reasons to build structures for springs and seeps. First, they protect the water from contamination caused by surface run-off and by contact with people or animals. Secondly, the structures provide a point of collection and storage for water. Water from springs and seeps is stored so it will be readily available to the users. This technical note discusses the construction of spring boxes and seep collection systems and outlines the construction steps to follow. The steps are basic to small construction projects and should be followed for the construction of most spring structures.

Useful Definitions

CONVEX - Curving outward like the surface of a sphere.

DISINFECTION - The process of destroying harmful bacteria.

EFFLUENCE - An opening from which water flows.

PUDDLED CLAY - A mixture of clay and a little bit of water used to make something watertight.

UNDERFLOW - Flow of water under a structure.

VOIDS - Open spaces in a material.

Materials Needed

Before construction begins, the project designer should give you the following items:

(1). A map of the area, including the location of the spring; locations of users' houses; and distances from the spring to the users, elevations,

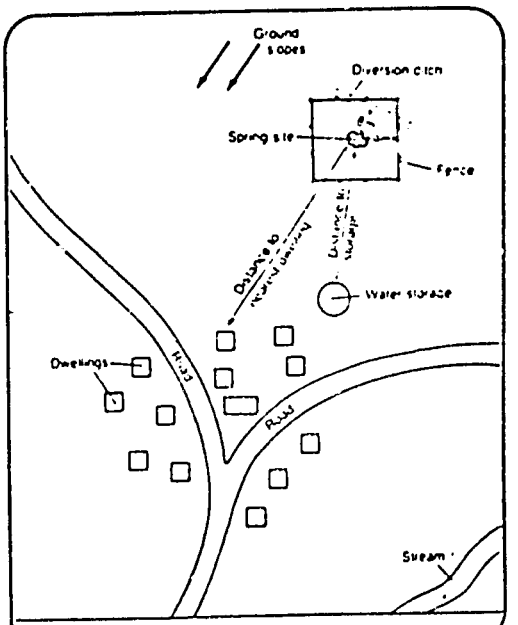

Figure 1. Location Map

and important landmarks. Figure 1 is a map of a small village with a spring located on high ground above it. Use your map to locate the construction site for the spring box.

(2) A list of all labor, materials and tools needed as shown in Table 1. Ensure that all needed materials are available and at the work site before work begins. Make sure that adequate quantities of materials are available to prevent construction delays.

(3) A plan of the spring box with all dimensions as shown in Figure 2. This plan shows a top, side, and front view, and the dimensions of a cover for a spring box 1m x 1m x 1m.

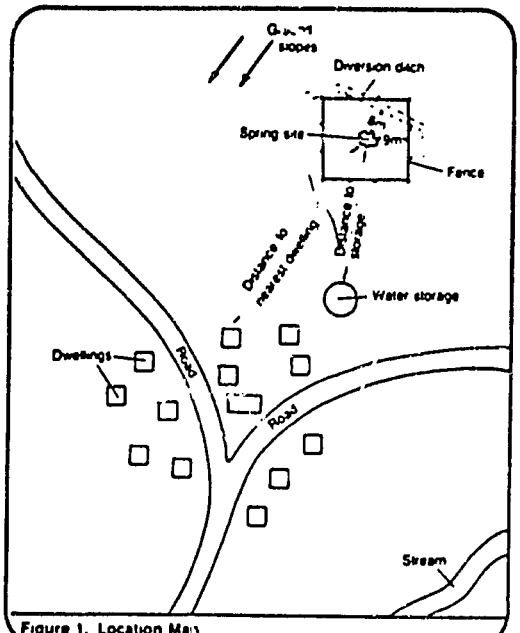

Figure 1. Location Map

Spring Box Design

There are several possible designs for spring boxes but, generally their basic features are similar. Spring boxes serve as collectors for spring water. They are sometimes used as storage tanks when a small number of people are being served and the source is located near the users. When larger numbers of people are served, the water collected in the spring box flows to larger storage tanks. The two basic types of spring boxes discussed in this paper are a box with one pervious side for collection of water from a hillside, and a box with a pervious bottom for collection of spring water flowing from a single opening on level ground. To determine which design to use dig out around the area until an impervious layer is reached, locate the source of the spring flow, and design to fit the situation.

Table 1. Sample Materials List

Item	Description	Quantity	Estimated Cost
Labor	Foreman Laborers	___ ___	___ ___
Supplies	Portland cement Clean sand and gravel, if available, or locally available sand and gravel Water enough to make a stiff mixture. Wire mesh or reinforcing rod. Galvanized steel or plastic pipe (for outlets, overflow, and collectors) Screening (for pipes) Boards and plywood (for building forms) Old motor oil or other lubricant (for oiling forms) Baling wire Nails	___ ___ ___ ___ ___ ___ ___ ___ ___	___ ___ ___ ___ ___ ___ ___ ___ ___
Tools	Shovels and picks (or other digging tools) Measuring tape or rods Hammer Saw Buckets Carpenter's square or equivalent (to make square edges) Mixing tin (for mixing concrete. Crowbar Pliers Pipe wrench Wheelbarrow Adjustable wrench Screwdriver Trowel	___ ___ ___ ___ ___ ___ ___ ___ ___ ___ ___ ___ ___ ___	___ ___ ___ ___ ___ ___ ___ ___ ___ ___ ___ ___ ___ ___

Total Estimated Cost ___

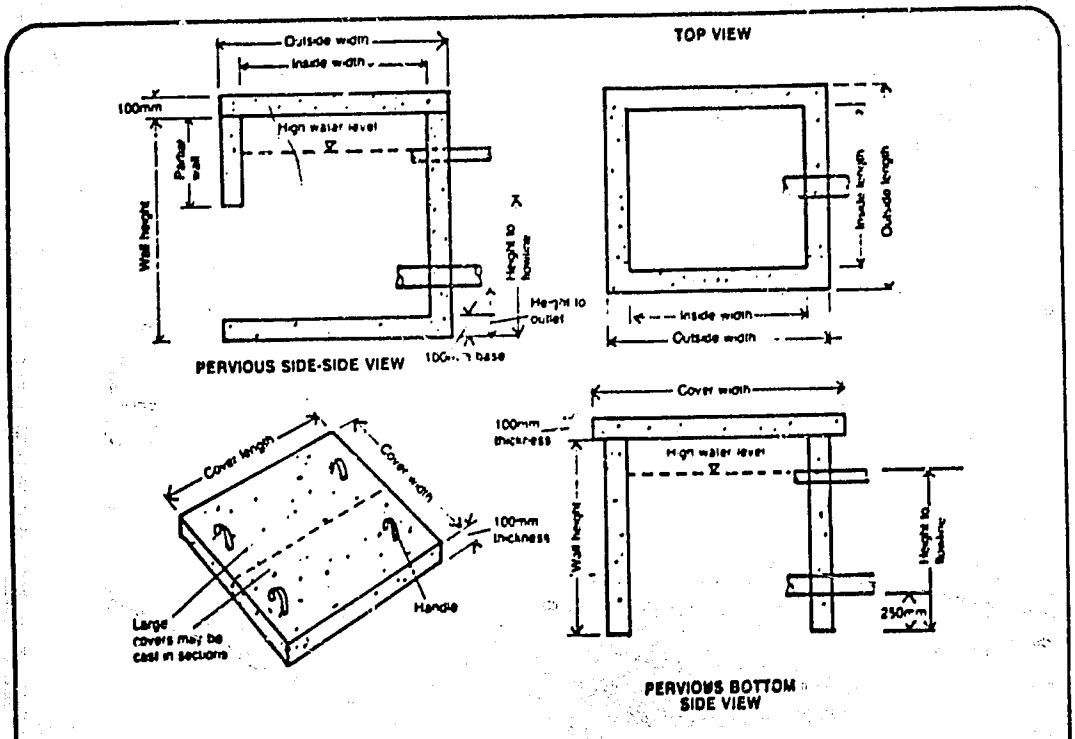

Figure 2. Spring Box Design

Spring Box with Open Side. A spring box with a pervious side is needed to protect springs flowing from hillsides. The area around the spring must be dug out so that all available flow is captured and channeled into the spring box.

After this has been done, a collection box can be built around the spring outlet as shown in Figure 3. The dug-out area should be lined with gravel. The gravel placed against the spring opening serves as a foundation for the box and prevents the spring water from washing soil away from the area. The gravel pack also filters suspended solids. The gravel-filled area should be between 0.5-1m wide depending on the size of the spring collection area. To ensure that no contamination reaches the water, the gravel pack should be at least 1m below the ground surface. This is done either by locating the spring catchment in the hillside or by raising the ground level with backfill.

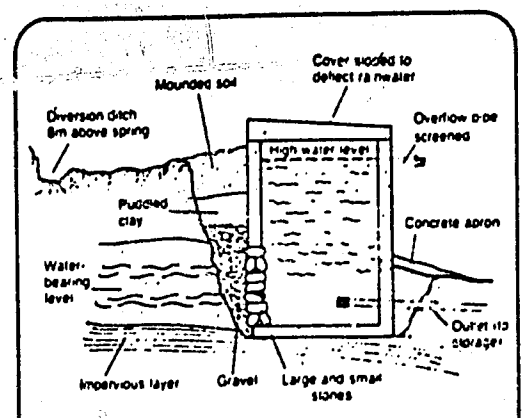

Figure 3. Spring Box with Open Side

Caution must be taken not to disturb ground formations when digging out around the spring. Without care, the flow of the spring may be deflected in another direction or into another fissure. The area must, however, be dug out enough so that the spring box fits into impermeable material. In cases where the box does not reach impermeable material, puddled clay should be used to seal the area around the sides of the spring box.

Spring Box with Open Bottom. If a spring flows through a fissure and emerges at one point on level ground, a spring box with an open bottom can be developed as shown in Figure 4. The area around the spring is dug out until an impermeable layer is reached. The area around the spring is then leveled and lined with gravel. The spring box is placed over the spring and gravel to collect the flow, and clay or concrete is packed around the box to prevent seepage between the ground and the box. Sometimes a small sump can be built at the bottom so that sediment settles in one place.

The design of both types of spring boxes is basically the same and includes the following features:

(a) a water-tight collection box constructed of concrete, brick, clay pipe or other material,
(b) a heavy removable cover that prevents contamination and provides access for cleaning,
(c) an overflow pipe, and
(d) a connection to a storage tank or directly to a distribution system.

The spring box with an open bottom is simpler and cheaper to construct. Generally, on level ground, flow from only one source must be captured and collection of all available flow is much easier. Costs are lower because less digging and fewer materials are required.

The spring box should be constructed at the spring site for easy installation. If the appropriate materials are available, the spring box should be made of concrete. Information on the use of concrete is included in Worksheet A. Three sides of the spring box must be impervious and depending on the type of spring selected for development, either the bottom or the

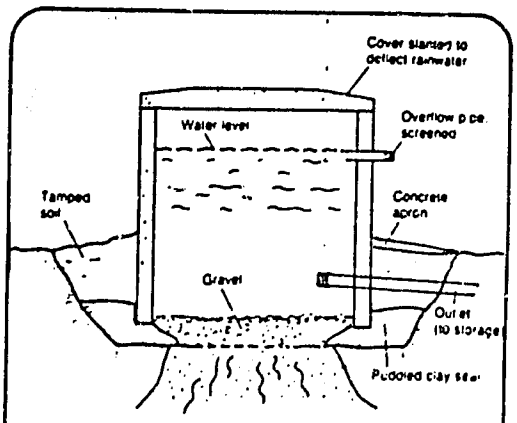

Figure 4. Spring Box with Open Bottom

upslope side must be pervious or open. The upslope side of an open sided spring box can be constructed partially with concrete and partially with large rocks and gravel as shown in Figure 3. Large rocks support the spring box and allow water to enter. Smaller stones should be used between the large rocks to close large openings so that sediment is filtered from the water.

If materials for building a concrete box are not available, or are expensive, there are alternatives that are particularly useful in developing a single source spring. Large prefabricated clay or concrete tubes, like regular spring boxes, can be placed around the spring. Water rises in the tube and flows out the outflow pipe. Rings for collecting spring water can even be constructed using bricks and mortar. Half or broken bricks can be used to build a ring as shown in Figure 5. The bricks are laid in a circular pattern, so that vertical joints do not line up. Spaces between the bricks are filled with gravel and mortar. Bricks are laid until a height of between 0.9-1.2m is reached. The diameter may vary but should be around 0.7-1.0m. An outlet and overflow pipe should be placed in the structure before installation and with reinforcement added. This type of structure is very practical and inexpensive to construct. Little cement is needed and locally available materials can be used.

Worksheet A. Calculating Quantities Needed for Concrete

(Calculations for a box 1m × 1m × 1.0m with open bottom)

Total volume of box = length (l) x width (w) x height (h)

Thickness of walls = 0.10m

1. Volume of top = l 1.2 m x w 1.2 m x t 0.10 m = 0.144 m^3
2. Volume of bottom = l 0 m x w 0 m x t 0 m = 0 m^2
3. Volume of two sides = l 1 m x w 1 m x t 0.10 m x 2 = 0.20 m^3
4. Volume of two ends = l 1 m x w 1 m x t 0.10 m x 2 = 0.20 m^3
5. Total volume = sum of steps 1, 2, 3, 4, 5 = 0.54 m^3
6. Unmixed volume of materials = total volume x 1.5; 0.54 m^3 x 1.5 = 0.81 m^3
7. Volume of each material (cement, sand, gravel, 1:2:3):

   cement: 0.167 x volume from Line 6 0.81 = 0.13 m^3 cement.
   sand: 0.33 x volume from Line 6 0.81 = 0.26 m^3 sand.
   gravel: 0.50 x volume from Line 6 0.81 = 0.4 m^3 gravel.

8. Number of 50kg bags of cement = $\frac{\text{volume of cement}}{\text{volume per bag}}$

   volume of cement 0.13m^3 - .033m^3/bag = 4 bags.

9. Volume of water = 28 liters x 4 bags of cement = 112 liters.

(NOTE: 1) Do not determine volume for an open side or bottom.
2) The top slab has a 0.1m overhang on each side.
3) The same calculations will be used to determine the quantity of materials for construction of a seepage wall.
4) To save cement a 1:2:4 mixture can be used.)

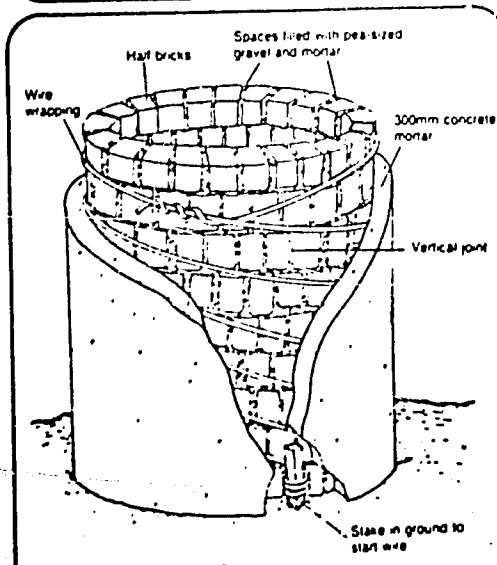

Figure 5. Brick Spring Box

The capacity of the spring box depends on whether it is being used for storage or pre-storage. If the spring box is used for storage, it should be large enough to hold a volume of water equal to the needs of the users over a 12-hour period. For example: If 100 people each use 25 liters of water per day, the amount of water consumed in 12 hours is 1250 liters. There are 1000 liters per m^3. Therefore the volume of the spring box should be 1.25m^3. (Volume = length x width x height). If the collection box is used only for pre-storage and water flows on to another storage tank, the collection box can be smaller.

A reinforced concrete cover must be constructed to protect the tank from outside contamination. The cover should be cast in place to ensure proper fit. It should extend over the spring box about 0.1m on each side so rain does not fall at the base of the spring box. The cover should be heavy enough so children cannot lift it off.

The spring box should have an overflow pipe. The pipe is placed a little below the maximum water level and at least 0.15m above the floor of the tank. If the pipe is above the maximum water level, water will not flow out and pressure is created in the tank. The pressure could cause a back-up and diversion of the spring. The overflow pipe should be covered with a screen fine enough to keep out mosquitoes and strong enough to keep out small animals. The size of the pipe depends on the flow of the spring. A rock drain or concrete slab should be placed outside the tank below the overflow pipe to prevent erosion near the base and to carry the water away from the spring. A pipe which extends 3-5m from the tank is desirable in order to keep the site free from still water.

An outlet pipe for connection to a distribution system should be located at least 0.1m above the bottom of the spring box to prevent a blockage due to sediment build-up. The pipe size depends on the grade to the storage tank and the spring flow. A general rule to follow is that at a one percent grade, a 30mm pipe should be used. A grade between 0.5 and one percent requires a 40mm pipe, while a 50mm pipe should be used for grades of less than 0.5 percent. In some cases the same pipe will be both outlet and overflow. The outlet pipe should slope downward for best flow.

After the spring box is installed, the space behind it must be filled with soil and gravel. The gravel is the bottom layer. On top of it, a water-tight layer should be formed to prevent the entrance of surface water. This can be done with concrete or puddled clay. Puddled clay is a mixture of clay and water formed into a layer 150mm thick. The layer is placed on the ground and worked in by trampling on it. Several layers of puddled clay should be placed behind the box.

After sealing the area, the box can either be completely covered with soil or stand above the ground surface. The box should be at least 0.30m above ground level so that run-off does not enter it. For further sanitary protection, a ditch should be dug at least 8m above the spring box to take surface water away from the area. The soil from the ditch should be piled on the downhill side to make a ridge and help keep surface water away. A fence around the area will keep animals from getting near the spring box and help prevent contamination and destruction of the area. The fence should have a radius of between 7-8m.

Seep Design

Designs for seep development are similar to those for spring boxes. Figure 6 shows the basic design. Intakes (collectors) are very important features of seep development. The collector system consists of small channels containing 100mm clay open-joint or 50mm plastic perforated pipe packed in gravel. The collectors are installed in the deepest part of the aquifer. They take advantage of the saturated ground above them for storage during times when the groundwater table is low. The perforations in the pipes must be about 5mm in diameter or large enough to collect sufficient water but small enough to prevent suspended matter from entering the pipes. In fine and medium-sized sand, perforated pipe should be packed in gravel but suspended material often will enter the pipe in spite of the gravel.

To prevent clogging, the collectors should be sized so that the velocity of water flow in them is between 0.5m per second and 1m per second. See "Methods of Delivering Water," RWS.4.M.

Water collected by the pipes is channeled to the spring box through a gravel pack. The collectors must extend across the entire width and length of the water-bearing zone and should be perpendicular to the flow of the aquifer. These intakes should extend below the water-bearing zones to collect the maximum amount of water and permit free flow into the collector. The advantage of a collector system is that water seeping over a large area can be channeled into a central storage basin.

Clean-out pipes to flush sediment from the collection pipes should be attached to the collection pipes. To install clean-out pipes, add a length of pipe to the far end of the collection pipe. At the end of this length, place an elbow joint facing upwards and attach a vertical length of pipe.

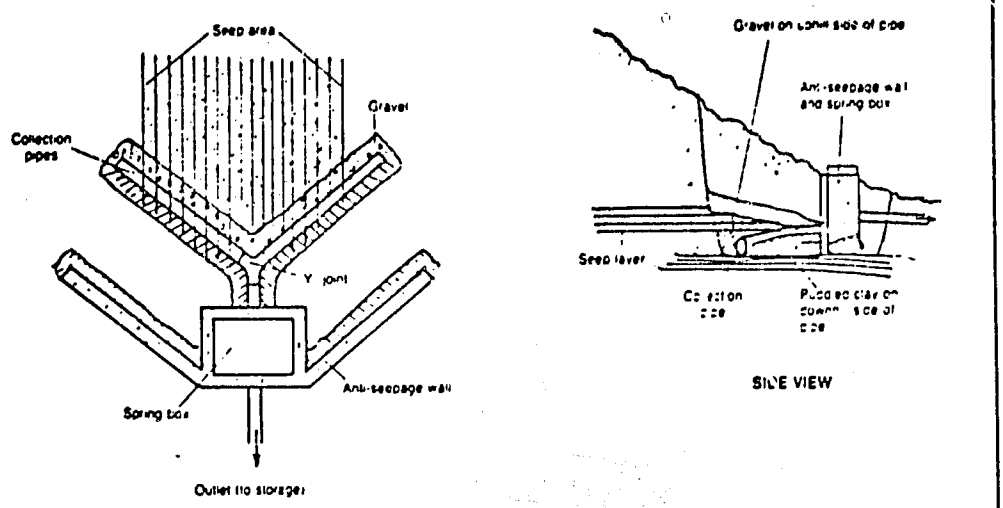

Figure 6. Seepage Collection System

The pipe should extend a little above the ground and be capped. If the collector system clogs, water can be added to the clean-out pipes to flush out the system.

For seep development, a cutoff wall of clay, concrete or other impervious material should be constructed. The cutoff is usually constructed as a large "V" pointing downhill with wing walls extending into the hill to prevent water from escaping. The cutoff should extend down into impervious material to force the flowing water to move to the collection point and to prevent loss of water due to underflow.

The use of concrete for the cutoff wall is best but most expensive. A wall 0.15m thick will ensure adequate strength against increased flow. The height of the cutoff wall depends on the size of the flow being collected. If desired, a spring box may be constructed inside the "V" shaped meeting of two walls as shown in Figure 7. The spring box will provide a settling basin for sediment removal and storage. The spring box should be designed so that water enters it

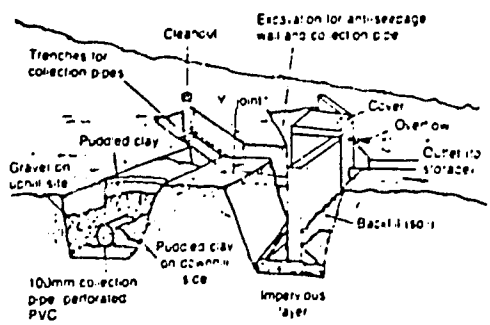

Figure 7. Basic Design Feature of a Seep Collection System

through openings in the upper wall. These openings must be screened to prevent entrance of debris.

Puddled clay instead of concrete can be used to form the cutoff wall. The clay is piled up and tamped down to form an impervious wall. It acts as a small dam which prevents spring water

from flowing away from the collection area. The clay cutoff wall works as well as the cement wall and is much cheaper and easier to install. Good impervious clay should be available if this type of cutoff wall is chosen.

An outlet pipe is installed to move water from the collection point to storage. The diameter of the pipe depends on the grade to storage and will generally range between 30-50mm. To determine the correct pipe size, see "Methods of Delivering Water," RWS.4.M. The outlet pipe for a spring box or simple collection wall should be at least 150mm from the bottom of the collection area. A watertight connection should be made where the pipe leaves the spring box or goes through the cutoff wall. As in the case of spring boxes, the outlet pipe must be screened with small mesh wire. Because of the cost, this type of structure should be used only where seeps cover an extensive area. Skilled laborers will be needed for construction.

Horizontal Well Design

Horizontal wells are very simple and can be quite inexpensive. In order to use a horizontal well, an aquifer must have a steep slope or hydraulic gradient. Steep hydraulic gradients generally are found in chilly, sloping land and follow the ground surface. Horizontal wells, shown in Figure 8, are installed in much the same manner as vertical driven and jetted wells. See "Designing Driven Wells," RWS.2.D.2, and "Designing Jetted Wells," RWS.2.D.3 for specific design features.

A horizontal well can be driven if the spring flows from an aquifer in permeable ground. A pipe with an open end or with perforated drive points is driven into the aquifer horizontally or at a shallow slope to tap it at a point higher than its normal discharge. In some soils, the pipe can be driven by hand. Generally the pipe is driven using machinery.

"Designing Driven Wells," RWS.2.D.2, outlines the steps in designing a driven well. These same steps should be followed in designing horizontal wells. One design difference is that extra care must be taken

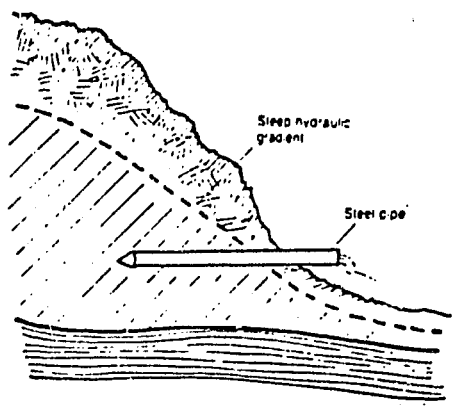

Figure 8. Horizontal Well

to avoid leakage between the driven pipe and the ground. If exterior flow occurs, it can be stopped by forcing clay or grout into the space, or by digging by hand 1m back along the pipe and installing a concrete cutoff wall. The wall should have a diameter of $0.6m^2$ and no more than 0.05m thick. After the concrete slab hardens, the dug-out area should be packed and backfilled with clay.

If the aquifer that feeds the spring is behind a rock layer, driving a horizontal well will be very difficult if not impossible. In this case, a jetted horizontal well will have to be installed. "Designing Jetted Wells," RWS.2.D.3, explains the process of jetting wells. The problem is that horizontal well drilling is different from vertical drilling, and may be too difficult for inexperienced people. Drilled horizontal wells should only be considered when there are no other reasonable alternatives.

Materials List

In addition to a location map and design drawings, give the person in charge of construction a materials list similar to Table 1 showing the number of laborers, types and quantities of materials needed to construct the spring protection. Some quantities will have to be determined in the field by the person in charge of construction.

Concrete. Concrete is the major material used in the construction of spring boxes and cutoff walls. Concrete is a mixture of Portland cement, clean sand, and gravel in a fixed proportion. The proportion generally used is one part cement, two parts sand, and three parts gravel (1:2:3). Water is used to mix the concrete. Twenty-eight liters of water should be used for each bag of cement. Worksheet A will help determine the amount of materials needed. Use the worksheet in making the following calculations.

1. Calculate the volume of mixed concrete needed (length x width x thickness; Worksheet A, Lines 1-5).

2. Multiply this number by 1.5 to get the total volume of dry loose material (cement, sand and gravel) needed (Worksheet A, Line 6).

3. Add the numbers in the proportion in order to find the fraction of the total needed for each material (1:2:3 = 6, so 1/6 of the mixture should be cement, 2/6 sand, and 3/6 gravel. In decimals, this is 0.167 cement, 0.33 sand, and 0.50 gravel).

4. Determine the amount of each material needed by multiplying the volume of dry mix from step 2 by the proportional amount for each material (1/6 x volume of dry mix = total amount of cement needed; Worksheet A, Line 7).

5. Divide the volume of cement needed by .033m^3 (33 liters), the amount of cement in a 50kg bag, to find the number of bags of cement required. When determining the amount of cement, figure to the largest whole number (Worksheet A, Line 8).

6. An extra quantity of cement should be figured into the total for use in grouting and sealing areas around the outlet pipes.

7. Calculate the amount of water needed to mix the concrete (28 liters of water per bag of cement; Worksheet A, Line 9).

8. Extra gravel will be needed for backfill of areas behind springs. Graded gravel is preferable, but local materials can be used if necessary. Calculate the volume of the area to be backfilled by taking length x width x height of area.

Reinforced Concrete. Concrete can be reinforced to give it extra strength. This is best done with wire mesh or specially made steel rods. Reinforced concrete sections must be at least 0.10cm thick. Reinforced concrete should be used for all spring box covers and for the walls of seep structures. If wire mesh is used, the quantity needed will be approximately equal to the area of the slab being constructed. If steel bars (rerod) are used, they should be placed in the wooden form before the concrete is poured. 10mm diameter rods should be used.

The reinforcing rod should be located as follows:

- So that the rods are at least 25mm (0.25m) from the form in all places;
- So that the rebar rests in the lower part of the cover; two-thirds the distance from the top or .70mm from the top of a 100mm slab;
- So that a 150mm (0.15m) space lies between a parallel rods in a grid pattern as shown in Figure 9.

Where the reinforcing rods cross, they should be tied together with wire at the point of intersection.

To determine the number of reinforcing bars, divide the total length or width of the spring box cover by 0.15m (distance between bars). For example, $\frac{1.2m}{0.15m} = 8$ bars.

To determine the length of each bar, subtract 0.05m (0.025m each side) from the total length or width of the cover. For example, 1.2m - 0.05m = 1.15m.

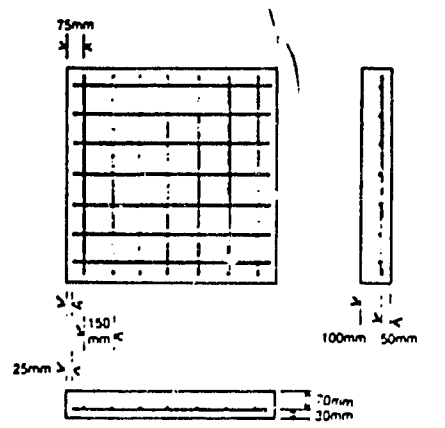

Figure 9. Placement of Rebar in Concrete Slab

Pipes. Outlet pipes can be of galvanized steel, or plastic depending on what is available. Galvanized steel is preferable because of its strength. Steel pipe lasts longer and does not shatter like plastic pipe. Intake pipes should be either clay, perforated plastic open-joint cement or in some cases, bamboo. The choice again will depend on availability of materials and cost. The pipe should have a minimum diameter of 50mm to be sure that an adequate supply of water enters the collection system. All pipes must be laid at a uniform grade to prevent air lock in the system.

When labor requirements, materials, and tools have been decided on, prepare a materials list similar to Table 1 and give it to the construction supervisor.

Important Considerations

Spring protection should ensure that the source is always protected from contamination. Before attempting to develop a spring, conduct a sanitary survey as described in "Conducting Sanitary Surveys to Determine Acceptable Surface Water Sources," RWS.1.P.2. Follow the guidelines for measuring the quantity of available water present in "Selecting a Source of Surface Water," RWS.1.P.3, to be sure that the source will meet community needs. The preliminary work described in these technical notes should be done before designing a protective structure.

The choice of the structure for spring protection depends on the geologic conditions of the area, the type of spring, the materials available, and the skill level of available labor. Spring boxes are easy to design and require little construction expertise, although workers should have some construction experience. Driven horizontal wells are also easy and inexpensive to develop although some expertise is needed to complete a successful well.

Structures for seeps are more difficult to design and require that workers have a much higher level of construction experience. The cost of developing a seep may be very high depending on the length of the retaining wall and the amount of pipe needed for intakes.

Water for the World

Maintaining Structures for Springs

Technical Note No. RWS. 1.0.1

Spring structures are easy to operate and maintain. One of the main advantages of springs as water sources is that they are inexpensive to develop. The structures needed to protect them require little attention after installation. No structure, however, is completely maintenance free. Even the most simply designed spring structure needs periodic maintenance to ensure that it provides good quality water in sufficient quantities. This technical note describes the periodic maintenance needed for spring boxes and seep collection systems so that they operate effectively for many years.

Useful Definitions

EROSION - The wearing away of soil, rock or other material by the flow of water.

PERVIOUS - Allowing liquid to pass through.

SEDIMENT - Small particles of dirt and other matter that settle to the bottom of water.

TURBIDITY - Cloudiness in water caused by particles of suspended matter.

Maintenance of Spring Boxes

The maintenance of spring boxes requires that a check be made to ensure that the structure adequately protects the water source and that all available water is being collected. Examine the spring box periodically to ensure that there is no silt build-up and that water quality is good. Study the following conditions at the site to ensure that the spring is well-protected and free from any operating problems.

Determine whether the diversion drainage ditch above the spring is doing an adequate job of removing surface water from the area. If not, the trench should be improved. The diversion ditch should be lined with gravel or stones to increase flow and to prevent erosion of the sides. Grass can be planted in the trench to prevent erosion, but heavy growth will block flow. Be sure to check the diversion ditch periodically to make sure that grass is not too high and that no other obstructions will block water flow.

If there is a fence above the spring, make sure it is in good repair and is effectively keeping animals away from the spring.

Check the upslope wall to be sure it is solid and erosion is not wearing it away. If there are signs of heavy erosion or settling, add additional backfill of top soil, clay or gravel. Build up the hill with stones and plant grass to help control erosion around the spring box.

Check the water. If there is an increase in turbidity or flow after a rainstorm, surface run-off is reaching the source and contaminating it. Identify the source of the run-off and improve the protection of the spring.

Take periodic samples of the water and have them analyzed to check for evidence of fecal contamination. Information on taking a water sample and analyzing it can be found in "Taking a Water Sample," RWS.3.P.2 and "Analyzing a Water Sample," RWS.3.P.3.

Check the cover to be sure the box is watertight. Make sure that the cover is not removed by the users and that contamination is not being introduced by people dipping buckets and other utensils into the spring box.

Determine that all available water is being collected by the system. Watch out for water seeping from the sides or from underneath the spring box. If water seeps out, seal the leak with clay or concrete so that all flow is diverted into the spring box.

Ensure that the system is cleaned adequately. Once a year disinfect the system and clean the sediment out of the spring box. To clean the system, remove the cover. Allow the water to drain from the spring box by opening the valve on the outlet pipe. If the box has only one pipe for outlet and overflow, use a bucket to empty the spring box as shown in Figure 1. Then use a small shovel to clean out the sediment collected on the bottom of the tank. Sediment removal will prevent clogging and build-up which causes the tank to fill up more quickly.

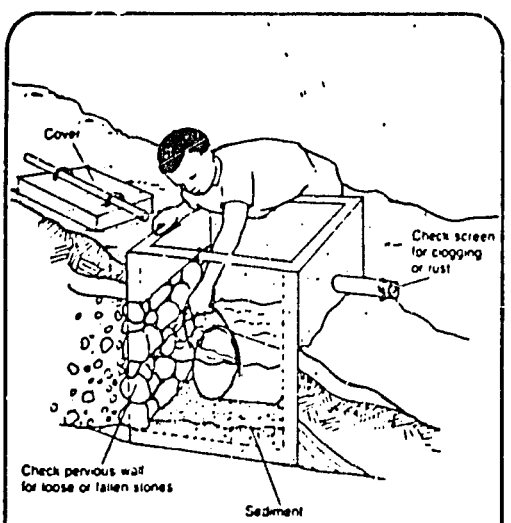

Figure 1. Emptying Spring Box

If a pump is built into the spring box to collect sediment, a drain pipe can be installed to carry sediment away. The drain pipe should have a valve. This type of installation is especially useful when tapping a fast flowing spring.

After cleaning the tank, follow the procedures for disinfection explained in "Disinfecting Wells," RWS.2.C.9. All walls of the spring box should be washed with a chlorine solution and chlorine should be put directly into the water. If possible, the chlorine should be allowed to stand for 24 hours. If the chlorine cannot stand that long, apply two doses of chlorine twelve hours apart to ensure complete disinfection. Figures 1, 2, and 3 show the cleaning and disinfection of a spring box.

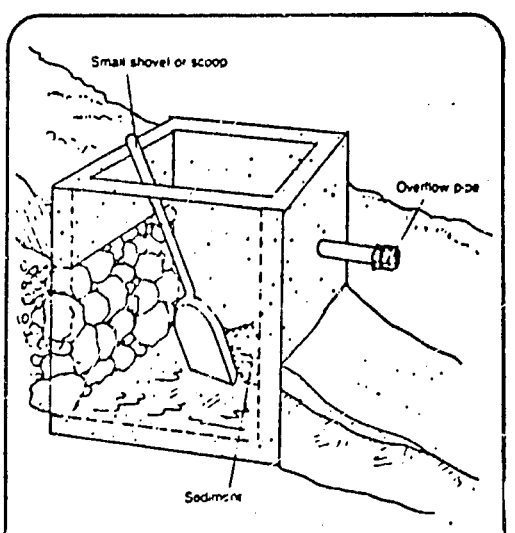

Figure 2. Removing Sediment

Check the screening on the pipes to see if cleaning is necessary. If screens are clogged or very dirty, they should be either cleaned or changed. Always use copper or plastic screening to prevent rust.

Maintenance of Seep Collection Systems

Operating and maintaining seep collection systems is similar to spring boxes except that extra care must be taken in the maintenance of the collection pipes. Although collection pipes are lined with gravel to filter out sediment, the pipes can still clog.

If clogging occurs, substantially less water will reach the collection box. If water flow decreases, suspect that the collection system is clogged.

To clean the clogged pipes, remove the cap from the clean-out pipe and pour water into it. Use either a hose or a bucket so that sufficient force is available to break up the sediment. See Figure 4.

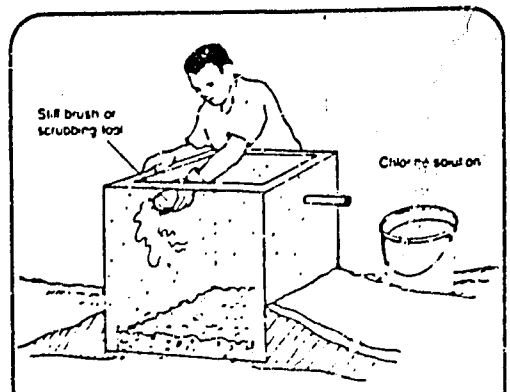

Figure 3. Scrubbing Walls with Chlorine Solution

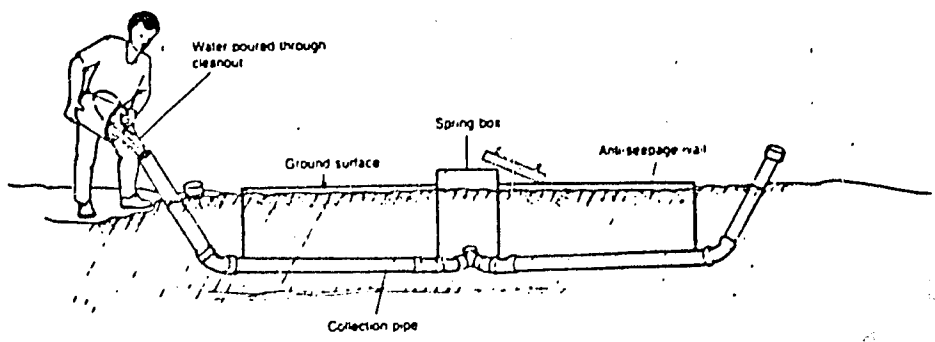

Figure 4. Flushing Out Seep Collection System

SPRING BOX SYSTEM

There are two important reasons to build structures for springs. First, they protect the water from contamination caused by surface runoff and by contact with people or animals. Secondly, the structures provide a point of collection and storage for water. Water from springs is stored so it will be readily available to the users. The following discusses the construction of spring boxes and outlines the construction steps to follow. The steps are basic to small construction projects and can be followed for the construction of most spring structures.

Materials Needed

Before construction begins, the project designer should give you the following items:

1. A map of the area, including the location of the spring; locations of users' houses; distances from the spring to the users; elevations; and important landmarks. Figure 1 is a map of a small village with a spring located on high ground above it. Use your map to locate the construction site for the spring box.

2. Ensure that all needed materials are available and at the work site before the work begins. Make sure that adequate quantities of materials are available to prevent construction delays.

3. A plan of the spring box with all dimensions is shown in Figure 2. This plan shows a top, side, and front view, and the dimensions of a cover for a spring box (1 m x 1 m x 1 m).

TAKEN FROM WATER FOR THE WORLD TECHNICAL NOTE - RWS 1.C.1 and 1.O.1.

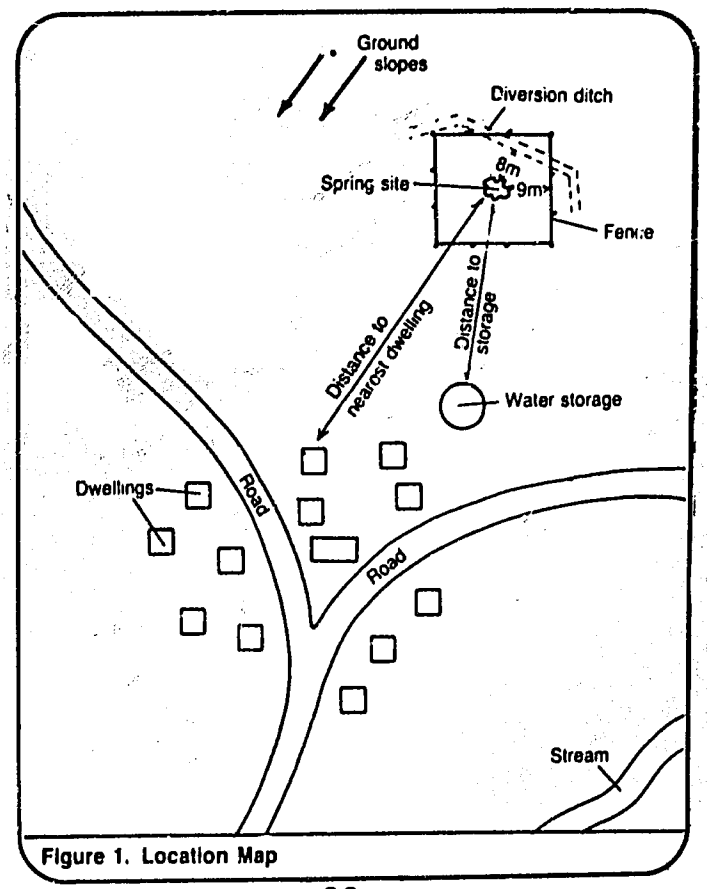

Figure 1. Location Map

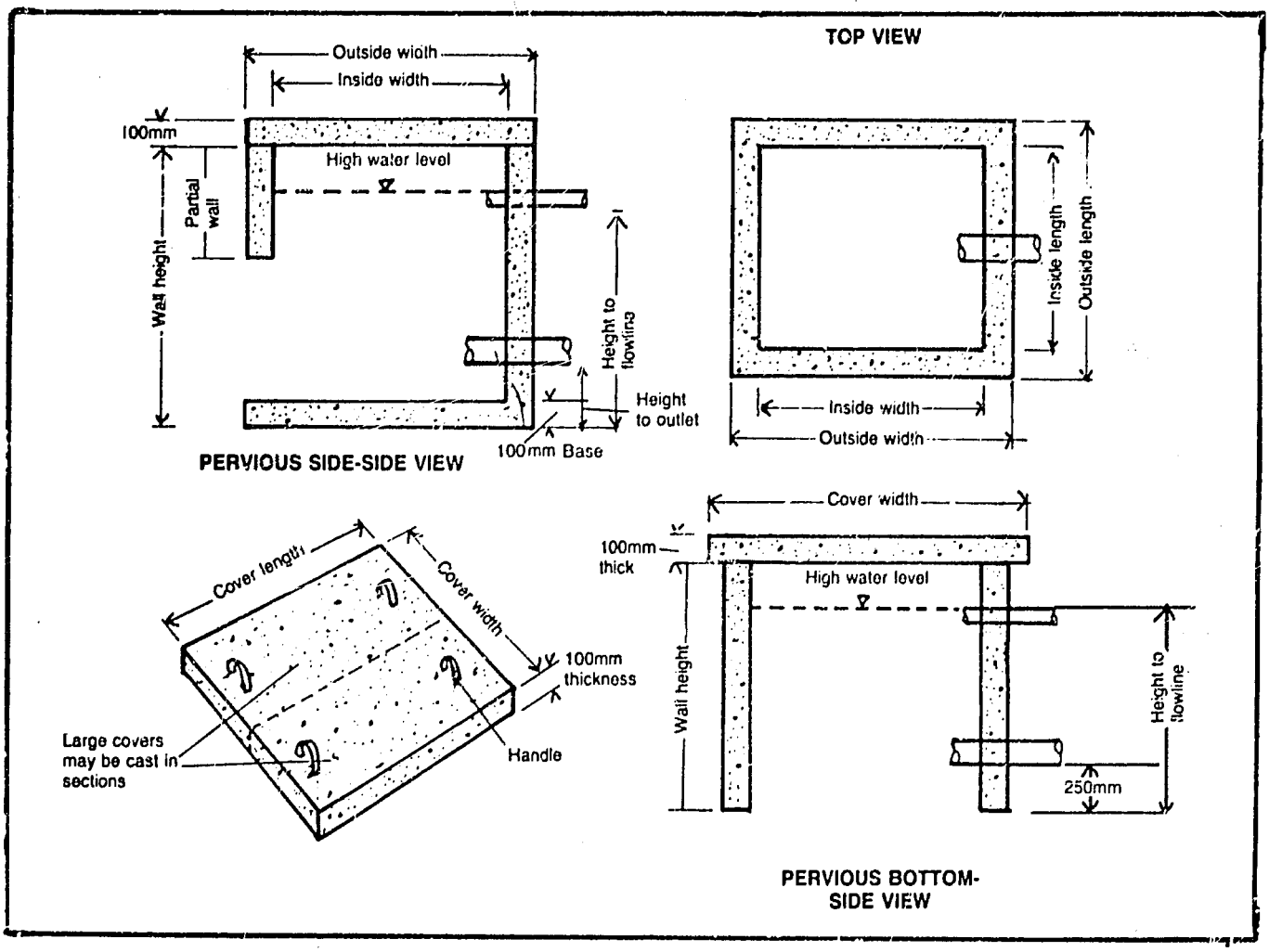

Figure 2. Spring Box Design

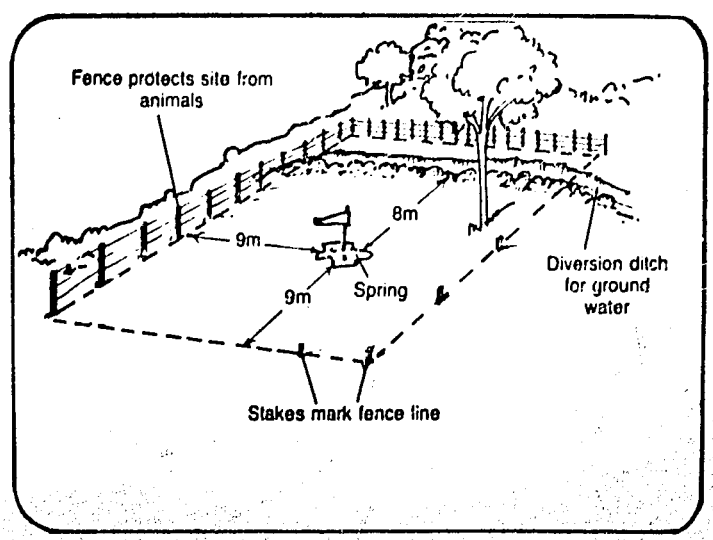

Figure 3. Preparation of Spring Box Site

General Construction Steps

Follow the construction steps below. Refer to the diagrams noted during the construction process.

1. Locate the spring site and, with measuring tape, cord, and wooden stakes or pointed sticks, mark out the construction area as shown in Figure 3.

2. Dig out and clean the area around the spring to ensure a good flow. If the spring flows from a hillside, dig into the hill far enough to determine the origin of the spring flow. Where water is flowing from more than one opening, dig back far enough to ensure that all the water flows into the collection area. If the flow cannot be channeled to the collection area because openings are too separated, drains will have to be installed. Information on the installation of drains appears in the section on the development of seepage collection systems.

   Flow from several sources may be diverted to one opening by digging far enough back into the hill. When digging out around the spring, watch to see if the flow from the major openings increases or if the flow from minor seeps stops. These signs indicate that the spring flow is becoming centralized and that most of the water can be collected from one point. The goal is to collect all available water from the spring. It is generally easier to collect water from one opening than from several.

   Dig down deep enough to reach an impervious layer. An impervious layer makes a good foundation for the spring box, and provides a better surface for a seal against underflow. If an impervious layer cannot be reached, attempt to construct the box in the most impermeable soil you can find.

   Pile loose stones and gravel against the spring before putting in the spring box. The stones serve as a foundation for the spring box and help support the ground near the spring opening to prevent dirt from washing away. They also provide some sedimentation. For fast flowing springs, large stones with gravel between them should be placed around the spring to prepare a good solid base. Figure 4 shows an example of gravel and stone placed between the spring box and the spring.

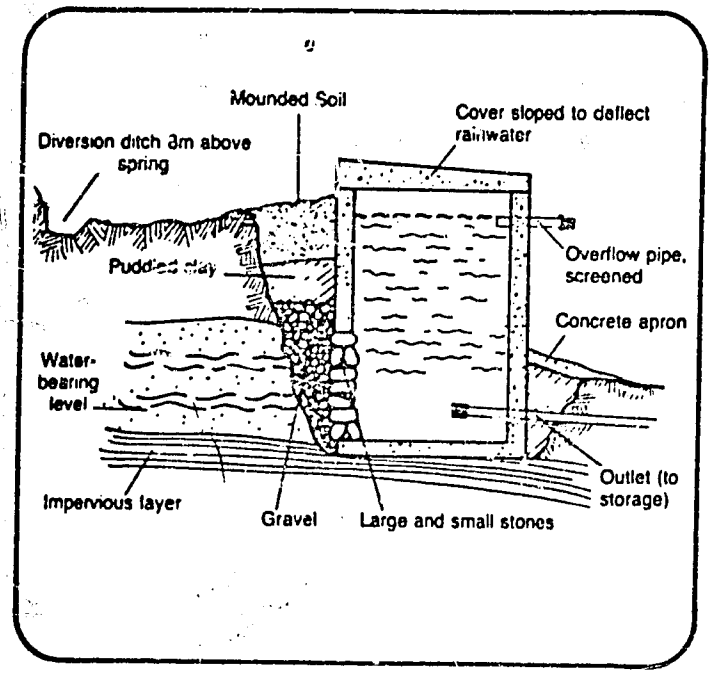

Figure 4. Spring Box with Open Side

If a spring flows from a single opening on level ground, dig out around the opening to form a basin. Be sure to dig down to impervious material to form the base. Line the basin with gravel so that the water flows through it before it enters the spring box. This is shown in Figure 5.

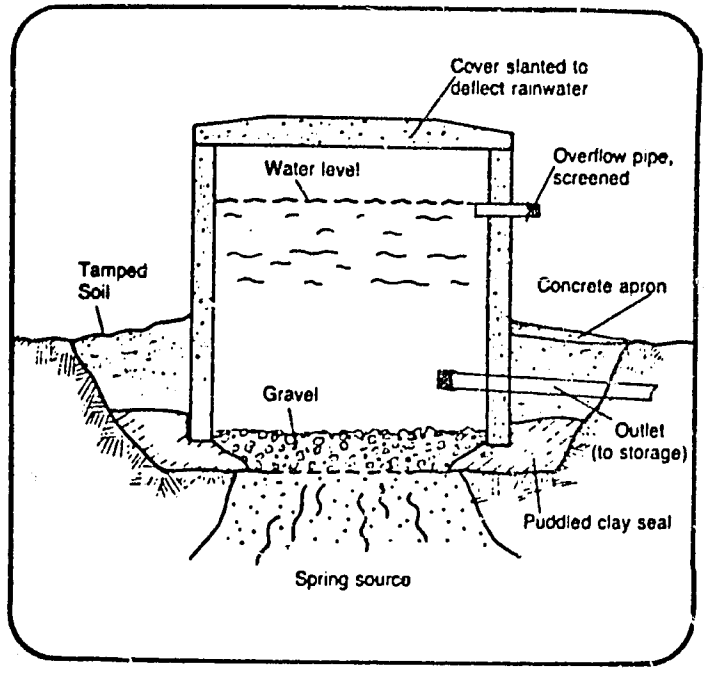

Figure 5. Spring Box with Open Bottom

4. Approximately 8 m above the spring site dig a trench for diverting surface run-off. The trench must be large enough to catch surface flows from heavy rains. If large stones are available in the construction area, use them to line the diversion trench to increase the rate of run-off and prevent erosion.

5. Mark off an area about 9 m X 9 m for a fence. Place the fence posts 1 m apart and string the fence. A fence is useful to prevent animals from frequenting the spring site.

Concrete Construction Steps

In order to have a strong structure, concrete must cure at least seven days. Strength increases with curing time. Therefore, construction of the spring box should begin at the site during the first day of work. If the concrete is poured on the first day, seven days will be available for site preparation before the spring box is put in place. Be sure that all tools and materials needed to build the forms and mix the concrete are at the construction site.

1. Build wooden forms. Cut wood to the appropriate sizes and set up the forms on a level surface. The outside dimensions of the forms should be 0.1 m larger than the inside dimensions. A form with an open bottom should be built for a spring flowing from one spot on level ground. For springs from hillsides, a spring box form with a partially open back must be constructed as shown in Figures 6 and 7. The size of the opening depends on the area which must be covered to collect the water. When building forms for a box with a bottom, be sure to set the inside forms 0.1 m above the bottom for the floor. This is done by nailing the inside form to the outside form so that it hangs 0.1 m above the floor. Make holes in the forms for the out-flow and overflow pipes. Place small pieces of pipe in them so that correctly sized holes are left in the spring box as the concrete sets. A form for the spring box cover must also be built. Build all forms at the site.

   Forms must be well secured and braced before pouring the concrete. Cement is heavy and the forms will separate if the bracing is not strong enough. One useful method is to tie the braces together with wire as shown in Figures 6 and 7. Drill holes in the forms and place wire through them. Using a stick, as shown, twist the wire to tighten it and force the forms together.

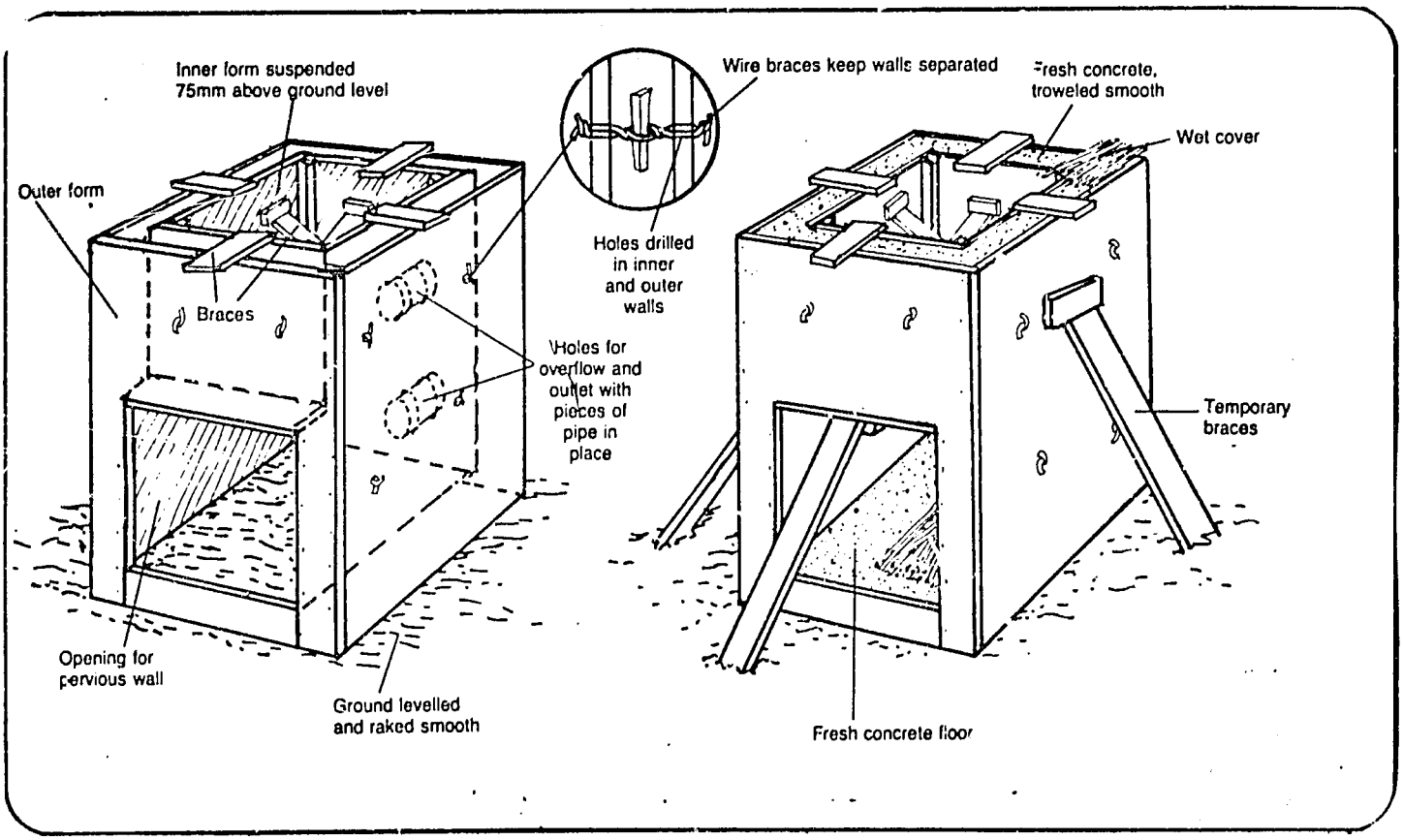

Figure 6. Forms for Spring Box with Open Side

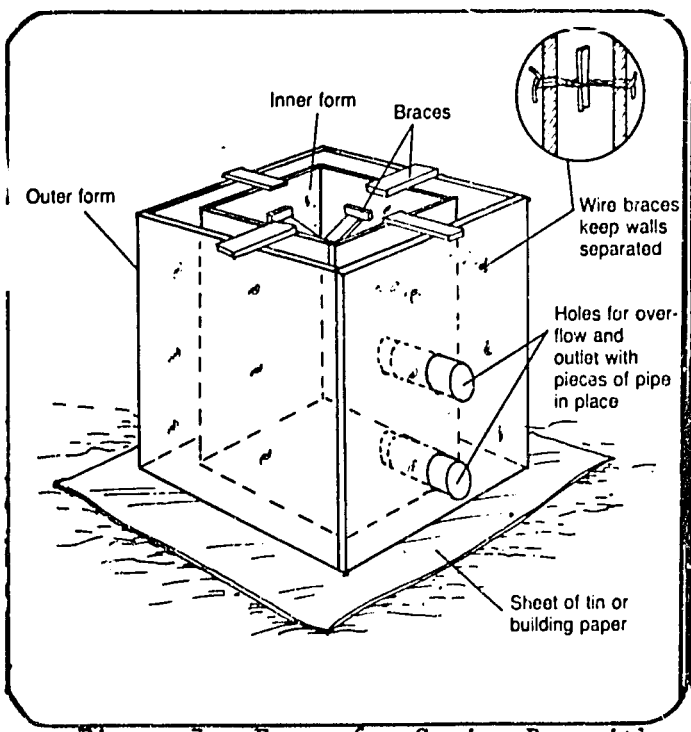

Figure 7. Forms for Spring Box with Open Bottom

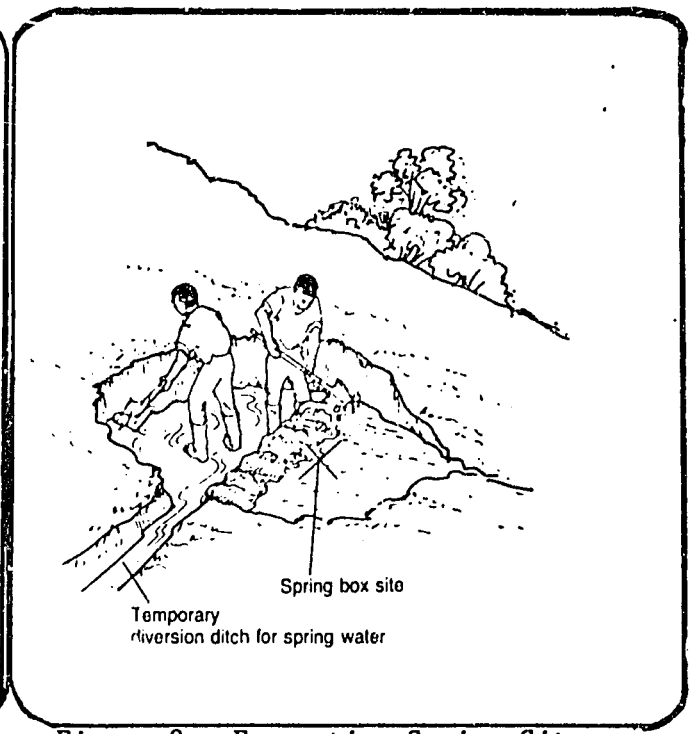

Figure 8. Excavating Spring Site

2. Set the forms in place. They should be either at the permanent site of the spring box or nearby so it will not be difficult to move the completed structure. If the forms are set and concrete is poured at the permanent site, water must be diverted from the area. This usually can be done easily by digging a small diversion ditch, as shown in Figure 8. Make sure that no water reaches the forms so that the concrete can cure.

   If water diversion is difficult, build the forms and pour concrete on a level spot very near the spring. Once the concrete dries, remove the forms and set the completed structure in place. This will require six to eight people.

3. Oil the forms. Put old motor oil on the wooden forms so the concrete will not stick to them.

4. Prepare the reinforcing rods in a grid pattern for placement in the forms for the spring box cover. Make sure there is 0.15 m between the allel bars and that the rods are securely tied together with wire. Then position the reinforcing rods in the form. See Figure 9 for an example of reinforcing rod placement in the spring box cover. Major reinforcing is not needed for the spring box walls but some minor reinforcing around the perimeter of the walls is good to prevent small cracks in the cement. Four bars tied together to form a square should be placed in the forms.

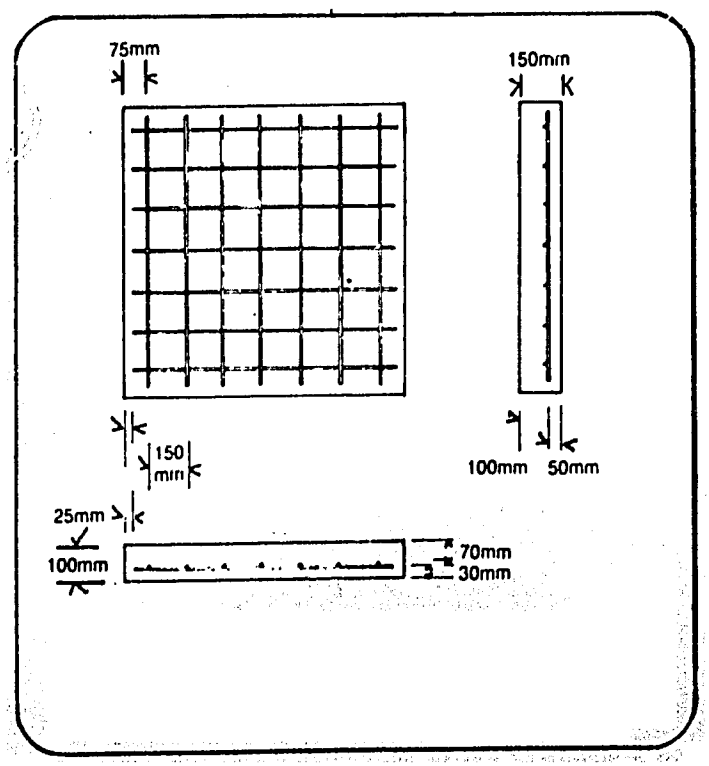

Figure 9. Placement of Rebar in Concrete Slab

5. Mix the concrete in a proportion of one part cement, two parts sand, and three parts gravel (1:2:3). Add just enough water to form a thick paste. Too much water produces weak concrete. In order to save cement, a mixture of 1:2:4 can be used. This mixture is effective with high quality gravel.

6. Pour the concrete into the forms. Tamp the concrete to be sure that the forms are filled completely and that there are no voids or air pockets that can weaken it. Smooth all surfaces. Smooth the concrete for the spring box cover so the middle is a little higher than the sides (convex shape), as shown in Figure 10. This will allow water to run off the cover away from the spring box.

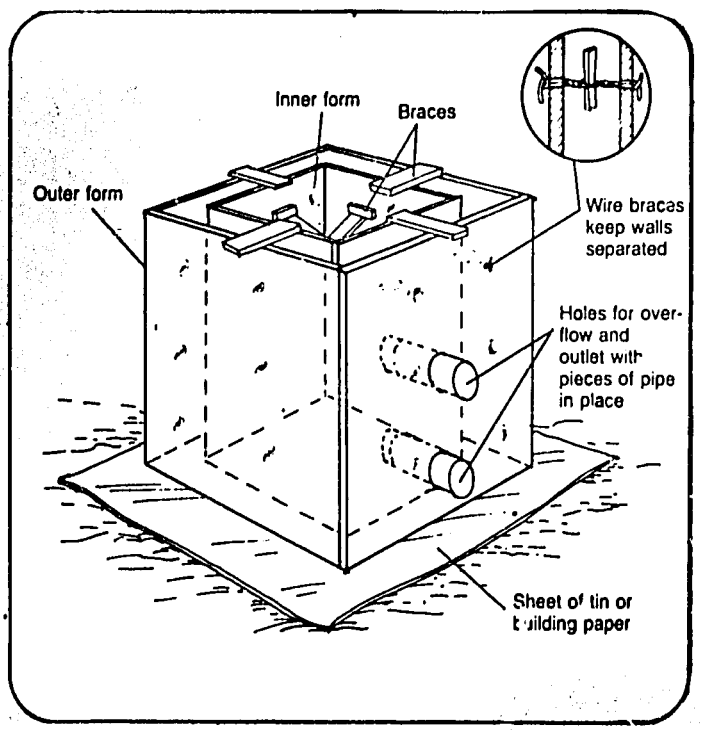

Figure 10. Forms for Spring Box Cover

7. Cover the concrete with canvas, burlap, empty cement bags, plast straw or some other protective materials to prevent it from losing moisture. The covering should be kept wet so water from the concrete is not absorbed. If concrete becomes dry, it no longer hardens, its strength is lost, and it begins to crack. Keep the cover on for seven days or as long as the concrete is curing.

8. Let the concrete structures set for seven days, wetting the concrete at least daily. After seven days, the forms can be removed and the box can be installed.

Installing a Spring Box

The spring box must be installed correctly to ensure that it fits on a solid, impervious base and that a seal with the ground is created to prevent water from seeping under the structure.

1. Place the spring box in position to collect the flow from the spring. If the flow comes from a hillside, the back of the spring box will be open. Stones should be placed at the back of the box to provide support for the structure and to allow water to enter the spring box. Figure 4 shows the placement of open-jointed rock in a completely installed spring box on a hillside. On level ground, be sure that the spring box has a solid foundation of impervious material. Place gravel around the box or in the basin so that water flows through it before entering the box.

2. Seal the area where the spring box makes contact with the ground. Use concrete or puddled clay to form a seal that prevents water from seeping under the box.

3. Be sure that the area where the spring flows from the ground is well lined with gravel, then backfill the dug out area with gravel. The gravel fill should reach as high as the inlet opening in the spring box so that the water flowing into the structure passes through gravel. In Figure 4, the gravel layer reaches the same level as the open stone wall. For spring boxes on level ground, gravel backfill is unnecessary.

4. Place the pipes in the spring box. Remove the pipe pieces used to form the holes and put in the pipe needed for out-flow and overflow. On both sides of the wall, use concrete to seal around the pipes so water does not leak out from around them.. Place screening over the pipe openings and secure it with wire.

5. Disinfect the inside of the spring box with a chlorine solution. Before the spring box is closed, wash its walls with chlorine.

6. Place the cover on the spring box.

7. Backfill around the area with puddled clay and soil. On a hillside, place layers of puddled clay over the gravel so that they slope away from the spring box. The clay layer should nearly reach the top of the spring box and should be tamped down firmly to make the ground as impervious as possible. If only soil were used for backfill, it would have to be at least 1.5 to 2 m deep so that contaminated water could not reach the gravel layer. For springs on level ground, clay should be placed around the box. The clay foundation should slope away from the spring box so that water runs away from the spring outlet.

8. Backfill the remaining areas with soil to complete the installation.

Spring structures are easy to operate and maintain. One of the main advantages of springs as water sources is that they are inexpensive to develop. The structures needed to protect them require little attention after

installation. No structure, however, is completely maintenance free. Even the most simply designed spring structure needs periodic maintenance to ensure that it provides good quality water in sufficient quantities. The following describes the periodic maintenance needed for spring boxes so that they operate effectively for many years.

Maintenance of Spring Boxes

The maintenance of spring boxes requires that a check be made to ensure that the structure adequately protects the water source and that all available water is being collected. Examine the spring box periodically to ensure that there is no silt build-up and that water quality is good. Study the following conditions at the site to ensure that the spring is well-protected and free from any operating problems.

Determine whether the diversion drainage ditch above the spring is doing an adequate job of removing surface water from the area. If not, the trench should be improved. The diversion ditch should be lined with gravel or stones to increase flow and to prevent erosion of the sides. Grass can be planted in the trench to prevent erosion, but heavy growth will block flow. Be sure to check the diversion ditch periodically to make sure that grass is not too high and that no other obstructions will block water flow.

If there is a fence above the spring, make sure it is in good repair and is effectively keeping animals away from the spring.

Check the up-slope wall to be sure it is solid and erosion is not wearing it away. If there are signs of heavy erosion or settling, add additional backfill of top soil, clay or gravel. Build up the hill with stones and plant grass to help control erosion around the spring box.

Check the water. If there is an increase in turbidity or flow after a rainstorm, surface run-off is reaching the source and contaminating it. Identify the source of the run-off and improve the protection of the spring.

Check the cover to be sure the box is watertight. Make sure that the cover is not removed by the users and that contamination is not being introduced by people dipping buckets and other utensils into the spring box.

Determine that all available water is being collected by the system. Watch out for water seeping from the sides or from underneath the spring box. If water seeps out, seal the leak with clay or concrete so that all flow is diverted into the spring box.

Ensure that the system is cleaned adequately. Once a year disinfect the system and clean the sediment out of the spring box. To clean the system, remove the cover. Allow the water to drain from the spring box by opening the valve on the outlet pipe. If the box has only one pipe for outlet and overflow, use a bucket to empty the spring box as shown in Figure 1. Then use a small shovel to clean out the sediment collected on the bottom of the box. Sediment removal will prevent clogging and build-up which causes the box to fill up more quickly.

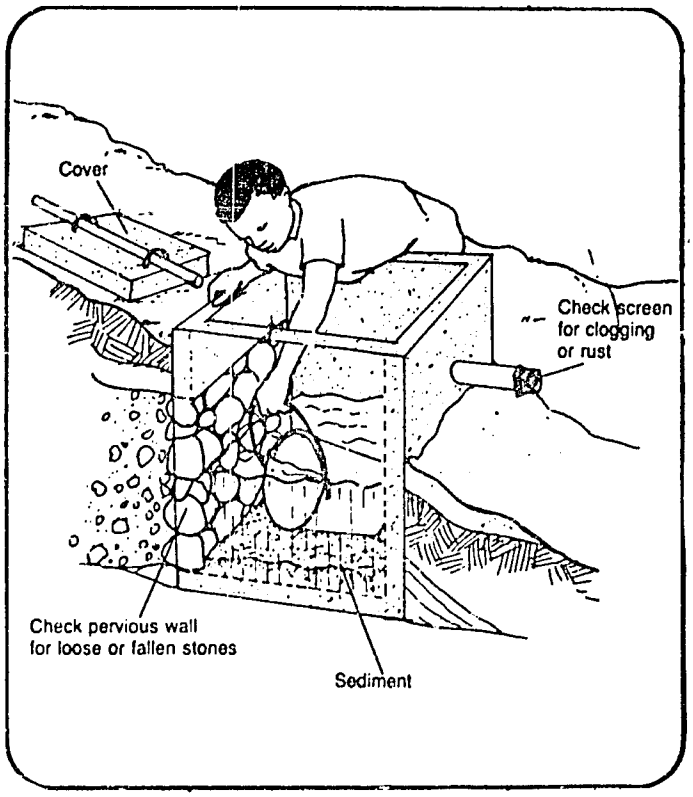

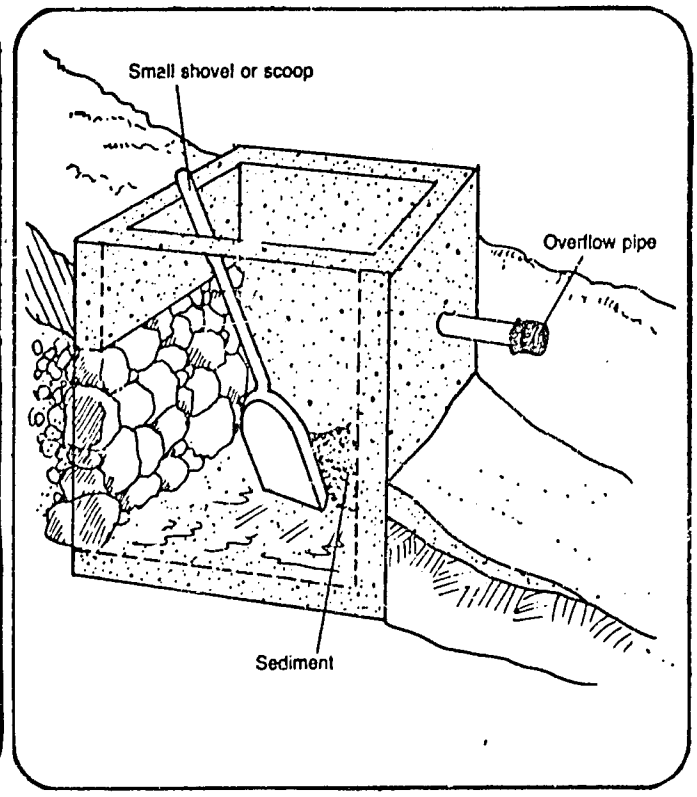

Figure 11. Emptying Spring Box Figure 12. Removing Sediment.

If a pump is built into the spring box to collect sediment, a drain pipe can be installed to carry sediment away. The drain pipe should have a valve. This type of installation is especially useful when tapping a fast flowing spring.

After cleaning the tank, follow the procedures for disinfection explained in "Disinfecting Wells," RWS.2.C.9. All walls of the spring box should be washed with a chlorine solution and chlorine should be put directly into the water. If possible, the chlorine should be allowed to stand for 24 hours. If the chlorine cannot stand that long, apply two doses of chlorine twelve hours apart to ensure complete disinfection. Figures 11, 12, and 13 show the cleaning and disinfection of a spring box.

Check the screening on the pipes to see if cleaning is necessary. If screens are clogged or very dirty, they should be either cleaned or changed. Always use copper or plastic screening to prevent rust.

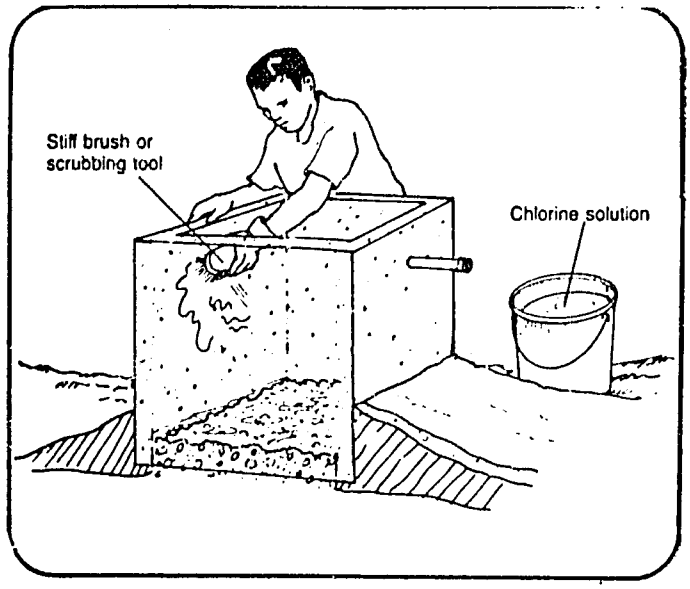

Figure 13. Scrubbing Walls with Chlorine Solution

SEEPAGE COLLECTION SYSTEM

Sometimes springs flow from many openings over a large area. To collect the water, a system of collectors made of perforated pipe, an anti-seepage wall, and a spring box must be built.*

Constructing Seep Collection System

The collectors must extend on both sides of the spring box and anti-seepage wall. Figure 1 shows an example. To install collectors, dig trenches into the water-bearing soil until an impervious layer is reached. In this way, water is taken from the deepest part of the aquifer (the underground water-bearing strata) and most of the available water can be collected. The trenches should extend the necessary length for collecting all available water and should be about 1 m wide.

Lay 50-100 mm diameter plastic perforated pipe or 100 mm clay pipe in the trenches. Perforations in the plastic pipe should be about 3 mm in diameter. On the uphill side of the trench, place enough gravel to cover the pipe. On the downhill side, build up a small clay wall to support the pipe. The pipe should have a 1 percent slope (0.01 m slope per 1 m distance) toward the point of collection. Flexible plastic tubing with slots already formed should be used if available. It is light and can be cut with a handsaw.

Clean-out pipes should be installed in the collection system. Attach lengths of pipe to the ends of the collection pipes. At the end of the clean-out pipes, place an elbow joint to which a vertical length of pipe is connected as shown in Figure 1. The pipe extends above ground level and is capped.

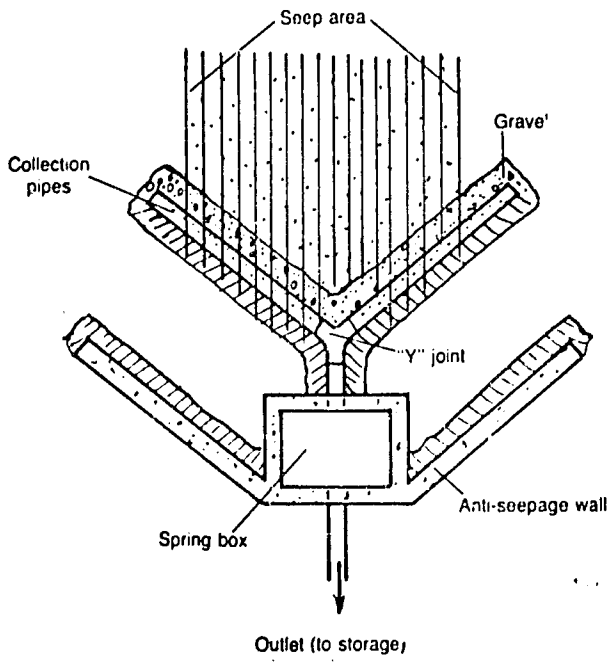

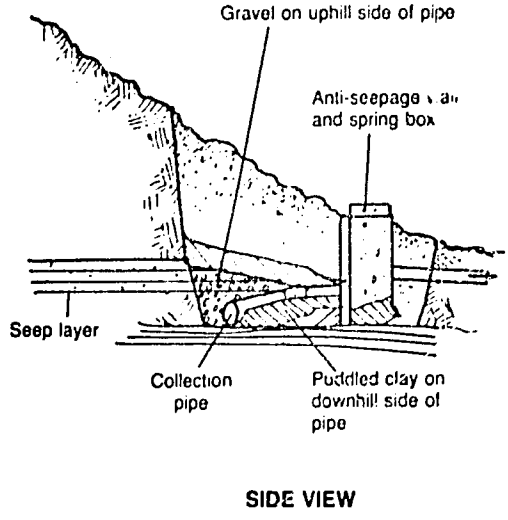

Figure 1. Seepage Collection System

*Note to participants: Another group is working with spring box construction.

TAKEN FROM WATER FOR THE WORLD TECHNICAL NOTE RWS 1.D.1, 1.C.1 and 1.0.1.

The next step is to build a concrete or impervious clay cutoff or anti-seepage wall. Dig down to an impervious layer for a good foundation. Make the forms for the cutoff wall 0.15 m thick. Follow the same procedures for constructing the cutoff wall as for the retaining wall. There must be a good seal between the wall and the ground so that no water seeps underneath. Water must be directed into the trenches and collectors. A small spring box can be built at the inside angle of the winged-wall with the wall forming two sides. If a spring box is built, the forms must be set at the same time as the cutoff wall. Water must be diverted from the construction area by small ditches for the seven days needed for the concrete to dry. Forms must be well braced and have holes for the in-flow and out-flow pipes. Always pour the seep collection wall and spring box in place. The structure will be much too heavy to move after casting.

When using clay, be sure to remove any debris from the site and tamp the clay well so that the small dam or wall does not let water seep through. The clay walls should be built like walls of a dam with a 2:1 or 3:1 slope. Put the clay down in layers 150 mm thick and tamp each layer down well to ensure good compaction. Keep the clay moist. Lay and tamp each 150 mm layer until the maximum height is reached. The walls should be well bonded to the spring box.

The construction of a seep collection system is more difficult and expensive than a simple spring box.

Installation of collectors requires more work and some experience. Once the collectors are installed, however, the construction of the seep cutoff wall is no different from spring box construction. The same steps must be followed, the same mixture of concrete used and the same general rules for curing concrete and for placement must be followed.

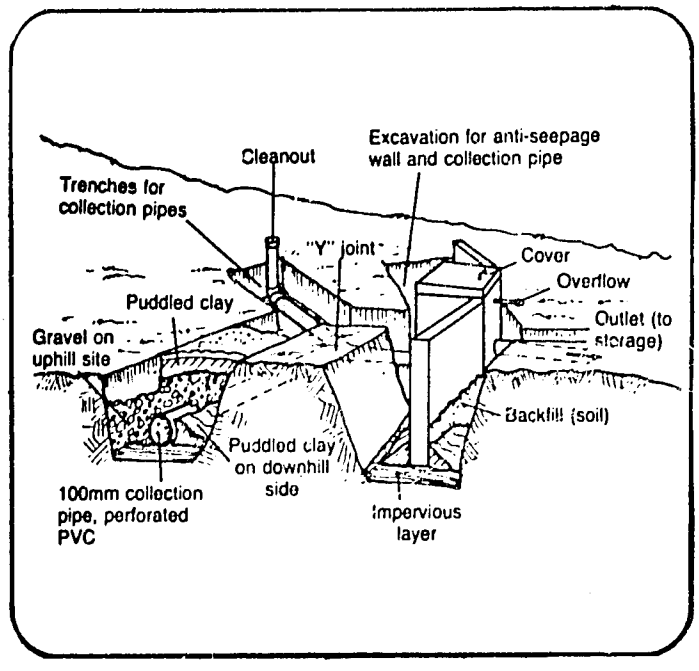

Figure 2. Seepage Collection System

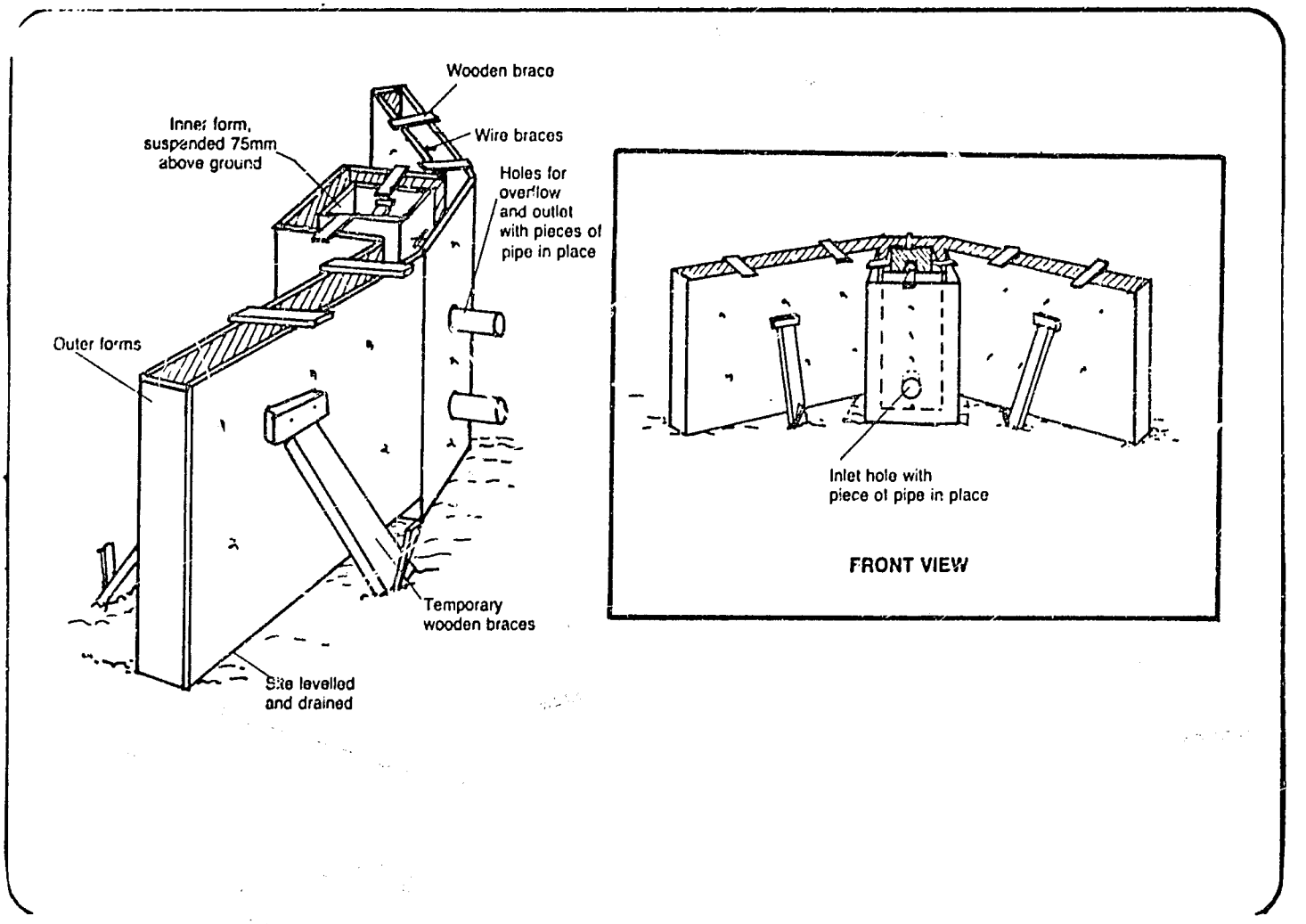

Figure 3. Forms for Anti-Seepage Wall and Collection Box

Operating and maintaining seepage collection systems is similar to spring boxes except that extra care must be taken in the maintenance of the collection pipes. Although collection pipes are lined with gravel to filter out sediment, the pipes can still clog.

If clogging occurs, substantially less water will reach the collection box. If water flow decreases, suspect that the collection system is clogged.

To clean the clogged pipes, remove the cap from the clean-out pipe and pour water into it. Use either a hose or a bucket so that sufficient force is available to break up the sediment. See Figure 4.

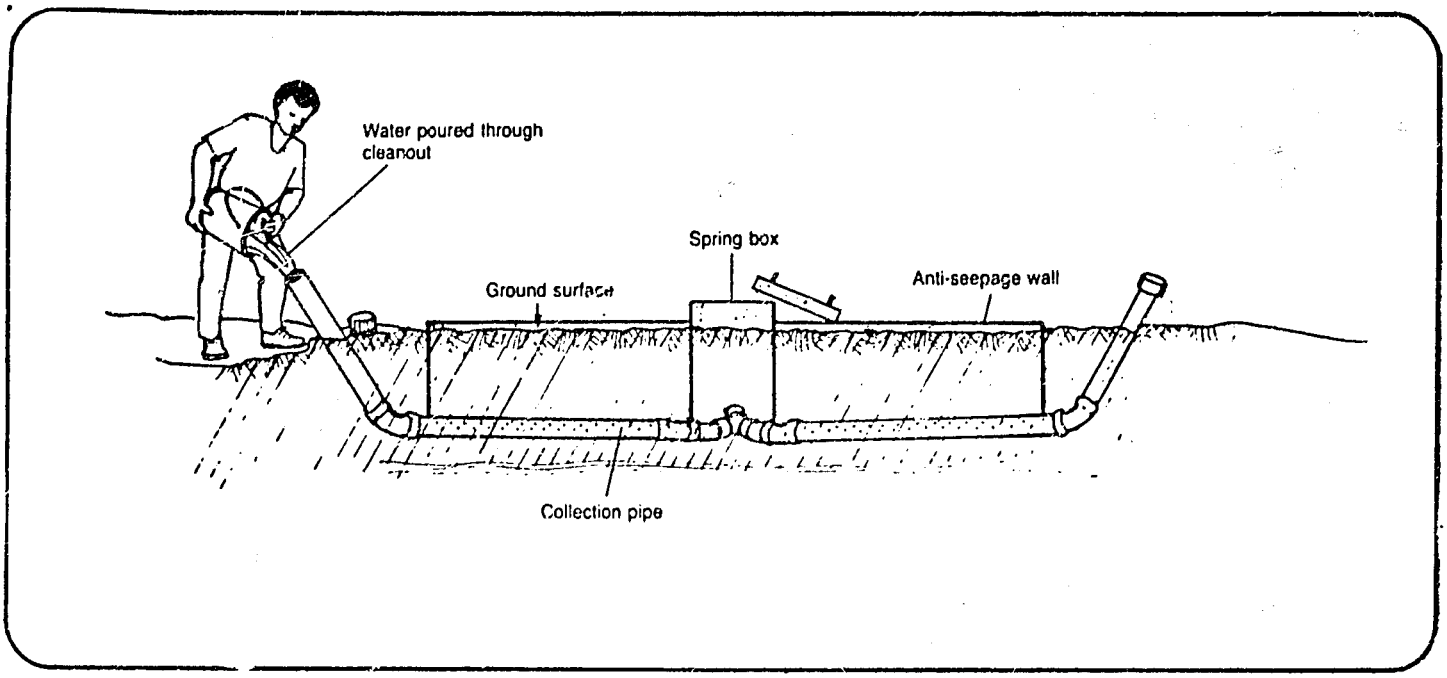

Figure 4. Flushing Out Seepage Collection System

STORAGE TANK

Purpose of Storage Tank

The construction of a storage tank for spring flow is an effective way to improve a spring water source with a low rate of flow. Storage tanks can be built as an addition to any type of spring containment system, retaining wall, spring box, or seepage collection system. The water flow from the spring is piped to a storage tank where the water accumulates and can be accessed by villagers through an outflow pipe and faucet. The water is stored in the tank overnight and is then available in large quantity when needed. Figure 1 shows a village map of a spring and a collection tank. The advantages of collection tanks are these:

1. The tank serves to store water that is provided by the spring during low-demand periods (such as overnight) for use during high-demand periods (such as early morning).

2. Water can be accumulated in vessels more quickly, since stored water will flow from the tank faster than from many direct-access spring flow pipes. Thus villagers won't have such a long wait for water during high use periods.

3. Water is captured overnight, thus resulting in less waste from unused run-off water.

4. Water can be kept clean, since it is stored in a tight, covered storage tank.

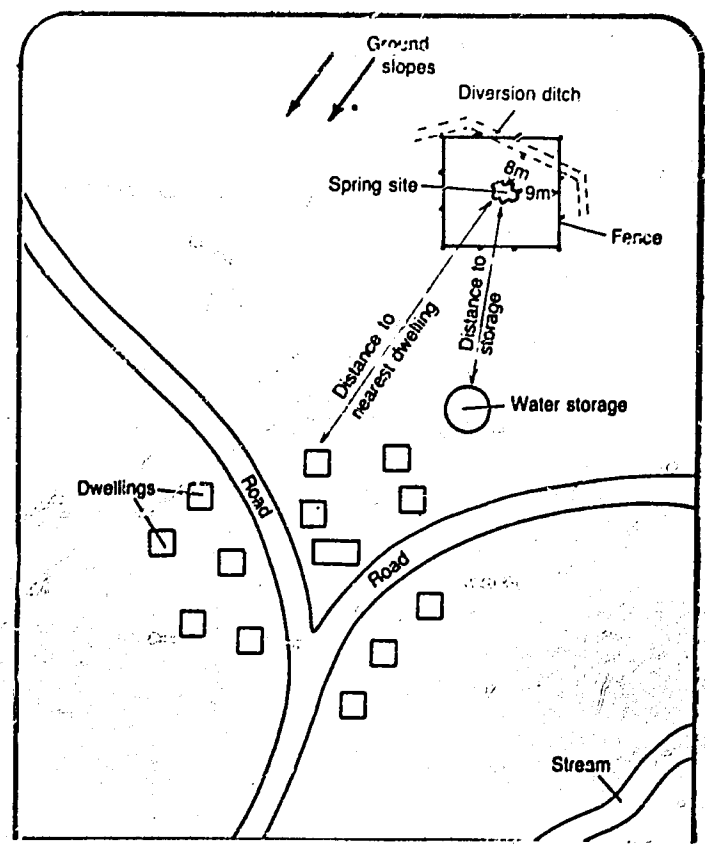

Figure 1. Location Map

TAKEN FROM WATER FOR THE WORLD TECHNICAL NOTE - RWS 5.D.2

Sizing a Storage Tank

To determine how large a storage tank must be, it is necessary to calculate how much water is used at various times during the day, and compare this to how much water is supplied by the source for those same time periods. The difference between supply and use will mean either that water will be drawn out of the tank or will flow into the tank. There are a number of ways to determine tank capacity; however, they are beyond the scope of this training program. The tank could be a variety of sizes and still serve as an improvement to villagers; however, it never need be larger than the volume of water yielded by the spring during the night.

Shape of a Storage Tank

All other factors being equal, the most economical tank shape is circular, then nearly-circular, then square, and then rectangular. For ease of construction, certain shapes are easier than others:

Circular tanks: The most economical shape to use, but not easy to construct, especially for small diameters.

Octagonal (8-sided) tanks: The best shape to use, but not easy to construct for diameters less than 2.5 meters (or capacities smaller than 3,200 liters).

Hexagonal (6-sided) tanks: Good for tanks between 1,700-3,200 liters (diameters not less than 2 meters).

Square tanks: This is the traditional shape, and easiest to construct for small capacities.

Rectangular tanks: The least-economical shape, especially as one side becomes much longer than the other. However, due to physical constraints of the site, it may be necessary to use this shape. Keeping it as nearly square-shaped as possible will make a more economical design.

For example the most economical dimensions for a 1,000 liter tank would be 1 meter wide, 1 meter long, and 1 meter high.

Constructing a Storage Tank

Storage tanks should be constructed with a reinforced concrete foundation and floor, followed by rock and mortar walls. The roof can be of wood frame or reinforced concrete construction.

The location of the storage tank must be selected so that water from the spring can flow into the tank and fill it. Further,the tank should be in a location that is convenient for drawing water from a faucet piped from the bottom of the tank.

The foundation for a storage tank is constructed in a similar way as that described for the retaining wall. Excavation to a suitable soil sub-base is first performed, then a layer of broken stone or gravel is placed over the sub-base. The location of the foundation for the walls should be carefully aligned by staking the locations of corners. After the foundation is

completed, the construction of the rock and mortar walls should be started at the corners. After the corners are built to the height of two or three courses of rock, then build the walls from corner to corner maintaining the straight alignment of each wall.

Storage tank walls can be stepped as shown in Figure 2. Stepping the wall is an economical use of construction materials and puts the thickest portion of the wall at the base where the water pressure will be the greatest.

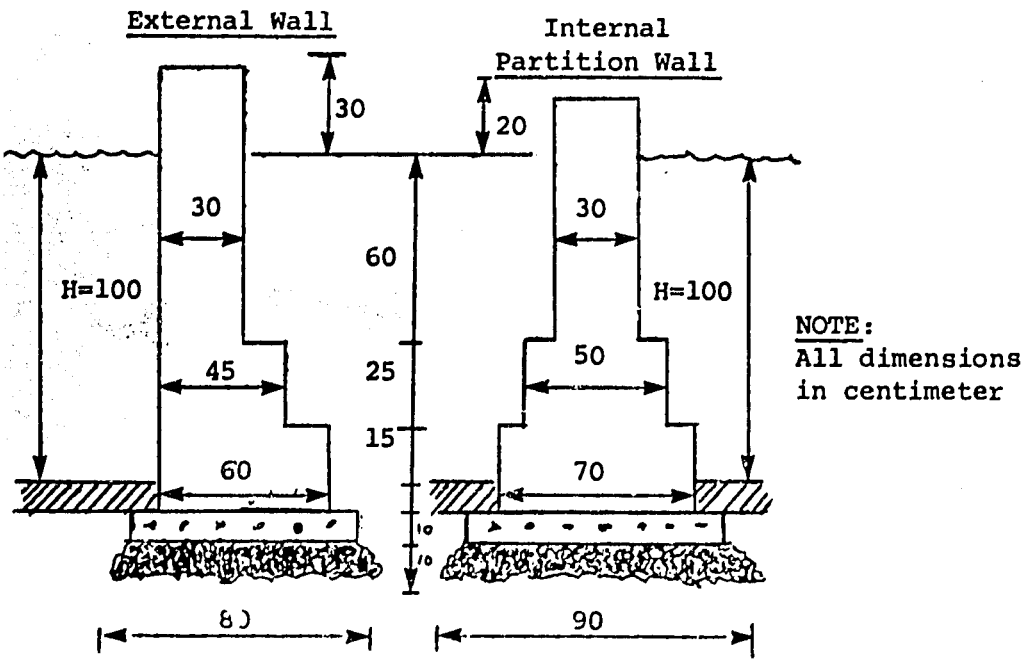

Figure 2. Storage Tank Wall

The floor of the tank may be either of masonry (i.e., mortared brick or stone) or reinforced concrete. A bed of gravel or crushed stone must be put down, roughly pitched so the floor will slope downwards to the drain pipe. As soon as the final concrete or plaster has set, the tank should be filled to a depth of about 30 cm to help the curing process (a deep depth of water would exert too much pressure on the floor which the cement would not be strong enought to support). After two weeks the tank can be filled completely and checked for any visible leakage.

Roof design and construction is complicated, but the basic considerations for a storage tank roof include:

a. It must be able to support its own weight, plus the weight of one or more persons

b. It should be relatively tight to prevent rain and dust and debris from entering the tank

c. It should have an access way for a person to inspect or enter the tank

d. It should be made of a durable material, timber and slate, or concrete, or galvanized iron sheeting. Avoid a material such as thatch, which can house vermin.

The finished walls and floor should be plastered with cement mortar to make the tank as watertight as possible. Plastering is discussed in Handout 8-1: Cement, Concrete, and Masonry.

Piping for a Storage Tank

The piping for a small storage tank will include:

a. an inlet pipe from the water source

b. an outlet pipe to the supply tap (faucet)

c. a drain pipe at the bottom of the tank

d. an overflow pipe near the the top of the tank

e. a valved bypass pipe which connects the inlet and outlet directly, allowing the tank to be emptied for maintenance

Figure 3 shows a typical piping arrangement.

Finished Grading

The ground around the reservoir should be mounded so that rain run-off will flow away from the tank. The surrounding land should be stabilized against erosion. If there is generally heavy rain run-off, then suitable drainage channels should be made. The drainage channel for the overflow should also be carefully constructed, and preferably should carry the water to where it can be utilized (such as for an animal water-hole, or for irrigation of a nearby garden).

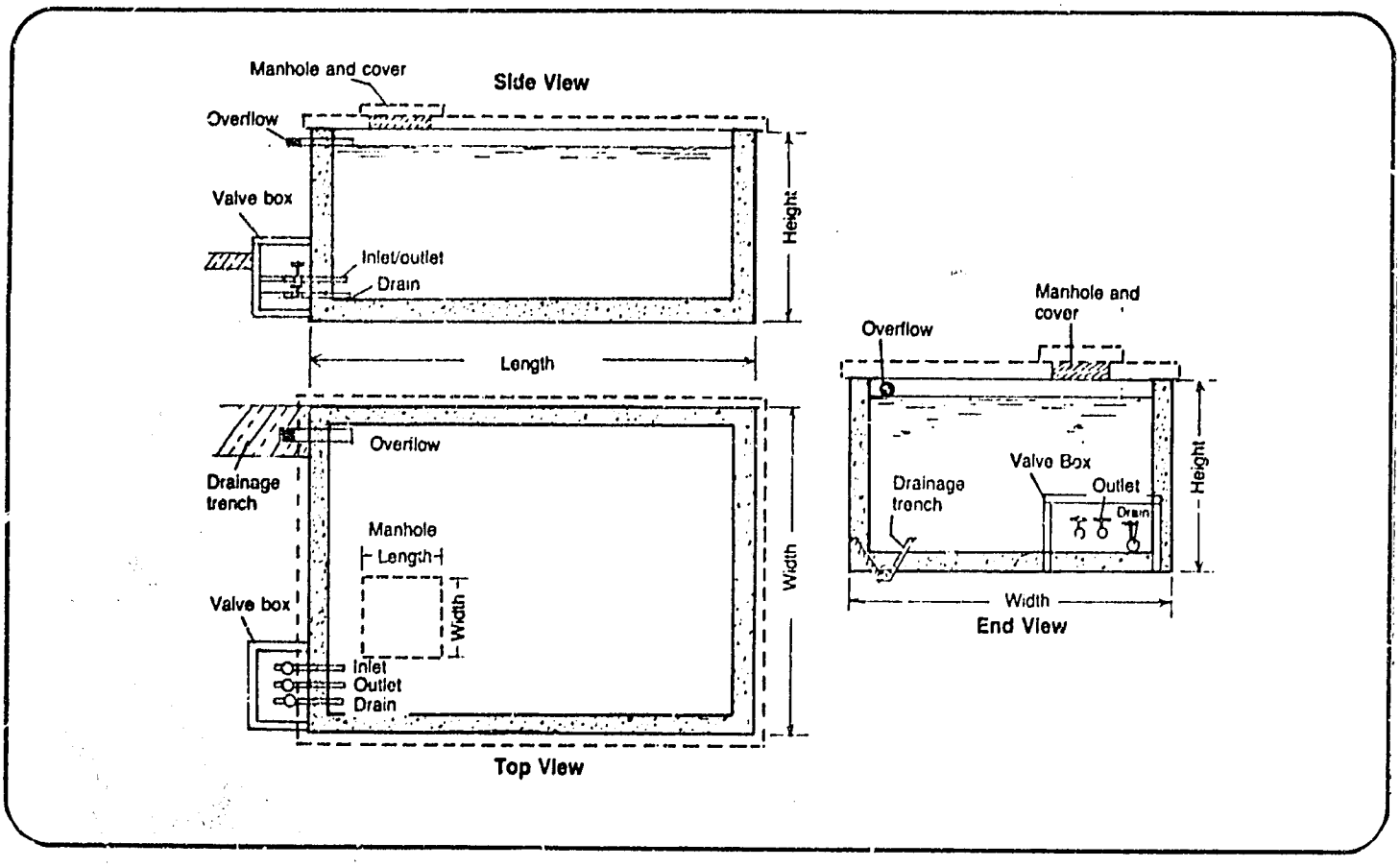

Figure 3. Storage Tank Design

Maintaining a Storage Tank

The maintenance of water storage tanks is necessary to ensure the quality of the water stored. Maintenance of tanks basically involves two important procedures: prevention of contamination, and cleaning the tank periodically to ensure that water is fresh.

General Maintenance

Water quality in storage tanks should be preserved. All storage tanks should be checked monthly to ensure that all necessary maintenance is done when needed. Never delay in attending to any problems that arise.

When looking at the tank, make sure to check the following:

- Covers. Make sure the cover fits tightly over the tank. There should be no space for dust or leaves to enter the storage tank. The cover should fit tightly enough to prevent the entry of light. Light stimulates the growth of algae in the tank.

- Potential Sources of Contamination. Check the area around the storage tank to make sure that no contaminants have been introduced to the area.

No waste disposal or garbage disposal sites should be near the storage tank, especially when they are located below ground. Under no circumstances should any disposal sites or animal pens be placed on ground above the cistern. Contaminants can flow downhill and destroy the quality of water. A ditch should be dug near the cistern to direct surface water away from the cistern or storage area. Keep animals out of the drainage area.

- Screens. Check the screens covering the pipe ends to make sure they are in good repair. Broken screens on outlet and overflow pipes are easy entry points for mosquitoes and small animals. All damaged screens should be replaced.

- Pipes. Check all pipe connections to ensure that there are no leaks in the system. When leaks occur, pipes should be tightened or repaired. Check all valves for proper functioning.

- Structure. Repair any damage that may occur to the cistern or storage tank. Add concrete to repair any chips, broken edges or cracks.

Cleaning the Tank

No matter how much prevention is practiced, a storage tank requires disinfecting and cleaning. To clean and disinfect the tank do the following:

- Drain all water out of the storage tank. Usually, this is easily accomplished by letting the supply in the tank fall over time and draining the last bit.

- After the tank is drained, sweep and scrub it until all dirt and loose material are removed.

Then choose the most appropriate method for disinfecting the tank.

- Fill the tank to overflowing with clean water and add enough chlorine to make a 50 mg/l solution. Add the chlorine to the tank as it is filling to get sufficient mixing. After the tank is filled, allow it to stand for at least six hours and preferably more. After sufficient time has passed, drain the tank and allow it to refill for regular use.

- A second and faster method can be used when little time is available. Directly apply a very strong, 200 mg/l, chlorine solution to the inner surfaces of the tank. For best results, brush the walls with the solution and allow the chlorine to stay on the walls for at least 30 minutes before the tank is refilled.

TWO SPRING CAPPING SITUATIONS

Spring A

Springwater flows up into an open hole in a flat, sandy area. If often fills the hole and spills out onto the sides, which become muddy. Villagers step across stones to get to this waterhole. Animals also sometimes come to drink. There is always enought water in the hole for many villagers to dip their containers and collect water. How would you cap this spring in order to protect it from contamination and let the spring flow directly into the villagers' water containers?

- How would you investigate the flow?
- What type of spring structure would you use? How would it remain stable?
- How would you protect the spring flow?
- How would you excavate? How big an area? What slope?
- How would you drain and clean up the area?
- What materials would you need? How much?

Spring B

At present there is a small tricle of water flowing down from several points across a rocky hillside. This collects in several small, silty clay depressions side by side at the bottom of the hill. Villagers come to gather water in their containers from these open pools covered with algae. There is adequate slope down the valley, but water flowing out of the pools now collects in a stagnant marshy pond. How could you cap this spring?

- How would you investigate the flow?
- How would you make this into one spring and service pipe under these conditions?
- What type spring structure would you use?
- How big an area would you excavate? What slope? How deep?
- How would you drain and clean up the area?
- What materials would be required?

WORK PLAN CHART

Activity	When	Who Is Responsible?	Resources Required

EVALUATION FORM-SPRING CAPPING

(Please do not sign your name)

A. Goal Attainment: Please circle the appropriate number to indicate the degree to which the workshop goals have been achieved.

At the end of this workshop trainees will be able to:

- Identify resources necessary to complete a village spring capping project.

  1 Low 2 3 4 5 High

- Communicate with village leaders and promote activities needed for project implementation.

  1 Low 2 3 4 5 High

- Identify and apply strategies for involving the community in spring capping activities.

  1 Low 2 3 4 5 High

- Survey and evaluate sites for potential spring capping.

  1 Low 2 3 4 5 High

- Communicate and apply relevant theories about water and its relationship to environment and health.

  1 Low 2 3 4 5 High

- Develop and implement work plans and logistics necessary for project start-up.

  1 Low 2 3 4 5 High

- Coordinate and supervise work force and delivery of materials.

  1 Low 2 3 4 5 High

- Design and build a retaining wall for capping springs.

1	2	3	4	5
Low				High

- Describe three alternative spring capping systems: the spring box, seepage collection and storage tank systems.

1	2	3	4	5
Low				High

- Use, maintain, troubleshoot, and repair retaining wall spring capping system.

1	2	3	4	5
Low				High

- Identify strategies for solving the most common problems which develop while building spring capping retaining walls.

1	2	3	4	5
Low				High

- Evaluate the spring capping project and document and record information gathered for future use.

1	2	3	4	5
Low				High

- Develop action plans for implementing spring capping projects in their regular work environments.

1	2	3	4	5
Low				High

B. Workshop Feedback and Learning: Please answer the following questions as fully as possible so that the trainers can learn how effective the workshop methodology was.

1. What have been the most positive things about this workshop? Comments:

2. What have been the most negative things about this workshop? Comments:

3. What one thing stands out as important to you in this workshop? Comments:

4. What things have you learned that you did not know before? Comments:

C. Workshop Organization and Training

1. What comments do you have about the way the workshop was planned and organized?

2. What comments do you have about the amount of time spent in the classroom compared to the amount of time spent in the field?

3. What can be done in the future to improve a workshop like this?

4. What specific steps in developing a spring capping project do you feel you will need to learn more about in order to successfully promote and develop such a project in the future?

5. What comments do you have about the trainers?