1510 3-9:8

PN AAQ 242

DATA COLLECTION HANDBOOK FOR ENERGY SYSTEMS INSTALLED IN DEVELOPING COUNTRIES

Prepared for:

The Office of Energy
U. S. Agency for International Development
Washington, DC 20523

Prepared by:

Richard McGowan, John H. Ashworth,
George Burrill and Richard Z. Donovan
Associates in Rural Development, Inc.
362 Main Street
Burlington, VT 05401 U. S. A.

PDC-1406-I-03-
2167-00

Date: February 8, 1984

TABLE OF CONTENTS

Chapter	Page
PREFACE	
INTRODUCTION	I-1
A. Organization and Use of this Handbook	I-1
B. Background on the Development of this Handbook	I-2
C. Africa Bureau Renewable Energy Technology Assessment	I-3
I. FRAMEWORK FOR FIELD DATA COLLECTION	II-1
A. Project Background	II-1
B. Energy System Profile	II-2
C. System Performance and Operations Log	II-2
D. Economic Data	II-3
II. WORKSHEETS FOR FIELD DATA COLLECTION	
ANNOTATED BIBLIOGRAPHY	

PREFACE

Information is central to decision-making. Without it, a manager or project designer can rely only on his or her intuition and assumptions. To be useful, information must be collected, processed into a form that is comprehensible to the reader, and then analyzed for its policy content. Successsful completion of these three steps will insure that the decision-maker will have a firm information base on which to form projects, select technologies and techniques, and allocate scarce resources of money and manpower.

This data collection handbook is designed to assist AID mission energy officers, project managers, and contractors in organizing the collection and processing of information on energy systems, including technical performance, reliability, cost, economic and social benefits, and their role within the context of a development project. This handbook has been designed to assist non-energy specialists in identifying what information should be collected in projects they manage and, conversely, what data they can expect from other AID projects.

This handbook was produced by Associates in Rural Development, Inc. (ARD) of Burlington, Vermont for the U. S. Agency for International Development's Office of Energy. Key personnel on the ARD team were Mr. Richard McGowan, Dr. John H. Ashworth, Dr. George Burrill and Mr. Richard Z. Donovan.

Introduction

Chapter I

I. INTRODUCTION

The purpose of this handbook is to provide AID project managers and other field personnel with a practical guide for collecting useful information on renewable energy technologies (RETs) installed in the field. The challenge has been to produce a handbook that is uncomplicated and easy to use so field staff are encouraged to collect data, and at the same time, ensure that enough data are collected to allow substantive comparative analysis of RETs installed in the field. A balance between the needs of the energy technologist and those of the manager/policymaker/planner has been sought.

Using this handbook should enable:

- technology specialists to compare the relative efficiencies and utility of specific RETs;
- program staff to make decisions regarding the effectiveness of certain energy technologies in helping to meet larger project or program goals;
- project design staff to capitalize on past experience when designing new projects and/or help current projects to focus more quickly on technologies that show promise;
- project managers to have the information necessary to defend good projects or provide concrete data on project achievements.

A. Organization and Use of this Handbook

This handbook contains two chapters and a biblioghraphy in addition to the introduction. Chapter II describes the purpose of each category in which data are to be recorded and their importance for subsequent analysis. Chapter III provides worksheets which can be copied and used in the field to record data on a variety of installed RETs. The handbook focuses on those RETs which receive the most attention in AID projects (cookstoves, wind systems and photovoltaics) as well as a few which present particular challenges to data collectors (active solar thermal and passive solar systems).

The worksheets are meant to be used by non-energy specialists going into the field to interview local and consulting project staff. It is important that data collection be as complete as possible and that data be measured in the units specified. One group of worksheets should be completed for each technology installation. Examples of completed worksheets for three technologies are included in Chapter III.

The Annotated Bibliography contains a list of other publications that may be of help to field staff in collecting and

analyzing data on RETs, as well as information on technologies covered in this guide.

On completion of data collection in the field, the worksheets should be kept in a project file for use by project managers, technicians and/or project evaluators. The worksheets can be used for project briefings and might also be passed on to the staff involved in the design of new projects.

B. Background on the Development of this Handbook

During the past decade, foreign assistance organizations and governments of developing countries have financed the design, testing, installation, operation and repair of energy systems in less-developed countries. Concerns with the foreign exchange implications of fossil fuel imports and the environmental impact of accelerating fuelwood consumption have led to a sharp increase in project and program funding in the energy sector by the U.S. Agency for International Development (AID). In general, AID has been a leader in providing technical assistance for small-scale energy systems, with a particular emphasis on renewable energy technologies.

Many of AID's energy-related projects have been in operation for several years now. Baseline energy consumption and energy resource data have been collected and used in the selection of candidate technologies. Technology prototypes have been developed, field-tested, modified, and turned over to local artisans or fabricators for production. Renewable energy systems and energy-efficient devices (motors, pumps, etc.) are now becoming available throughout the world, and energy consumption has become a factor in the design of all types of rural and urban development projects.

As new energy systems have moved into the mainstream of development planning, however, information on field performance, costs, and other important considerations have not always been readily available to project designers. There are two main reasons for this. First, monitoring data are often not collected at all in the field. Second, and more common, data are collected, but in a haphazard, unsystematic fashion. Hence, despite an agency-wide commitment to testing a variety of energy systems, the experience and "lessons learned" are lost, and newly designed and future projects do not benefit from such experience.

Ideally, technology monitoring should record performance, viability, social acceptability and value of development <u>while</u> a system is operating in the field. This does not necessarily suggest that an expensive electronic device be attached to an energy system, producing reams of data that are comprehensible only by computer. Rather, it means that the system is being observed--and its contribution to development is being assessed--on a regular basis. The information collected during

technology monitoring can be analyzed as part of AID's ongoing internal evaluation process. However, it is important to distinguish between technology monitoring/assessment and the AID evaluation system. Technology assessment focuses only on the ability of a system to do useful work, within the constraints of the local physical and socioeconomic environment. It does not determine whether a technology is instrumental in meeting overall project goal or purpose. That is the objective of the AID evaluation system. Technology assessment focuses specifically on assessing what combination of factors have led to the successful (or unsuccessful) operation of the energy system. Accurate information on unsuccessful installations is just as important as data taken from technically successful field tests.

C. Africa Bureau Renewable Energy Technology Assessment

In 1977, as part of AID's overall energy effort, the Africa Bureau initiated a continent-wide program to test and adapt new renewable energy sources, with a primary focus on systems that would directly assist the poor.

In late 1982, the AID Africa Bureau decided to quickly assess what had been learned from the field experience in these RET projects. Seven sample countries were selected and a number of both AID- and nonAID-sponsored projects were chosen as having significant energy installations which should be examined by field teams. From the start of this field assessment, it was understood that a number of different teams, composed of AID and contractor staff, would be traveling to different African field sites simultaneously. This meant a serious problem of data comparability, since the same individuals would not be visiting each site or questioning each project's staff.

Therefore, AID asked Associates in Rural Development, Inc. (ARD), the chief contractor for this field assessment effort, to develop a data collection workbook that could be used by all of the field teams. The resulting workbook not only listed the key data elements, but also examined data collection techniques and suggested ways of analyzing data so that data collected by different teams at different sites would be comparable. Before entering the field, four different teams were trained in the use of the data collection workbook at a two-day workshop in Abidjan, Ivory Coast. During field work, which covered more than 240 renewable energy systems installed in the seven sample countries, data sheets were filled out, shipped back to the United States and subsequently analyzed for answers to five major questions.*

1. What has been the observed technical performance of renewable energy systems installed in Africa?

---

* The findings of this field evaluation effort, being published as part of the AID evaluation series, is titled Renewable Energy Technologies in Africa: An Assessment of Field Experience and Future Directions.

2. What problems have emerged with social acceptance, institutional compatibility and technology delivery systems?

3. How have renewable energy systems performed in providing energy for agricultural, domestic and small-scale industrial use?

4. What is being done to monitor, evaluate and learn from renewable energy activities?

5. What potential do renewable energy systems have for meeting African energy needs in the next 10 to 15 years?

Much valuable information was gathered from the African assessment on the field performance, reliability, durability, social acceptability and economic viability of the limited number of energy systems observed by the field teams. However, the field teams encountered major data problems of all types. In many cases, particularly those involving projects run by small, nonAID donors, little or no data of any kind were being recorded. Very little information was available on equipment performance, maintenance requirements, or even capital costs.

Based on this experience, the AID Bureau of Science and Technology decided that a short, practical data collection guide would be a major contribution to AID's worldwide energy technology data-collection effort. The intent of this handbook, then, is to:

- present data elements in a language and format understandable to non-energy specialists;

- eliminate from the Africa energy assessment those data elements considered non-essential by AID mission/project management staff, so that the task of collecting energy data is not an onerous chore for field personnel;

- provide a uniform set of questions to be answered so that data can be compared and exchanged among AID-sponsored projects; and

- provide guidance to other donors and developing-country energy groups, so that data from their projects can be collected and presented in a format that is broadly compatible with that of AID projects.

Framework

Chapter II

II. FRAMEWORK FOR FIELD DATA COLLECTION

For each of the four major data categories,

- project background,
- energy system profile,
- system evaluation and performance, and
- economic and financial data,

nd for the range of energy systems covered in this handbook, ata collectors will face unforeseen complications in the field. his chapter explains the purpose behind each data collection ategory and discusses issues that complicate the collection of ield data for use later in technology assessment. Refer to the lank worksheets in Chapter III after reading the general xplanation for each section. Following the blank data ollection sheet section, samples of filled-out worksheets are iven so that the intent of the questions is made clear.

. Project Background

The purposes of the project background category are to:

- provide basic and necessary information for project managers, designers and evaluators about the scale, focus and overall framework within which technology design and dissemination are taking place; and
- describe the institutional mechanisms which have been used for delivering the energy technology to the intended users.

For project managers and designers, the purposes are often he elements which define the project's overall approach to echnology development and dissemination. When a number of gencies are involved in the project, it is necessary to clarify he component of the project that each is involved in as well as he role that each plays in the overall project strategy for evelopment and dissemination. Because many AID-funded projects re aimed at training, institution-building or the private ector, the design and dissemination of energy systems can take onger and be more complicated than with simple "turnkey" perations. These factors may also influence technology design y requiring that projects be suitable for mass production or ocal manufacture in rural areas.

The project background category is identical on each energy ystem worksheet and sets the stage for subsequent data ollection.

B. Energy System Profile

The purpose of sections on each worksheet is to identify precisely the equipment being used, so that other project managers and system designers examining the data can be certain of the exact specifications of the energy system. This is particularly important for manufactured systems, since different models from the same company often have very different performance characteristics, costs, fuel consumption, etc. Much of the data requested may be given on the manufacturer's specification sheet, or on a plate affixed to the machine (particularly in the case of engines and motors). When completing this section, be as specific as possible. Also, attach a detailed drawing or schematic of the system, if possible.

In order to provide a better perspective on the economic, technical, social and institutional performance of the alternative energy systems, a comparison should also be made of the new system to other (probably more traditional) technologies currently available. Other data elements included here enable the project designer or manager to compare different technologies that perform the same function and produce the same end product (e.g., shaft power, dried food, irrigation water). Thus, the full advantages and limitations of each technology can be compared in terms of a specific end-use application.

C. System Performance and Operations Log

This section is designed to:

- provide others who may design or use a given energy system with information regarding experiences with system operation and design that has resulted in a better technology; and

- describe the work the energy system performed, problems encountered during its operation and local skills required for operation and maintenance.

This information is particularly important for prototypes and initial field-testing, but is also important where major difficulties with a system were encountered and overcome. Information on seat-of-the-pants solutions could help other project managers or designers build important lessons from the field into their project and technology designs. Of particular importance to other project managers will be unanticipated interruptions in service, materials/component failures, and the solutions developed for these problems. Recording this information gives other managers considering this option the benefit of previous field experience.

Elements to be covered in this category include:

- system output, (i.e. average daily output of energy, fluctuations in output, etc.);
- system and component reliability, in terms of downtime and actual operations and maintenance requirements;
- system and component durability;
- suggested quantitative measures of technical performance;
- suggestions from users that were incorporated into technical design; and
- indirect measures of performance (often the only viable alternative for rapid data-gathering).

It can be very difficult to measure energy system performance. Quality data collection can require expensive and highly technical monitoring equipment and processes. Wherever possible, this information should be recorded. However, in many cases, the best measure of the success of a technology dissemination program will be the level of acceptance that an energy system has experienced, or similar indirect measures.

D. Economic Data

For many managers, this section is the core of the data collection effort. It outlines the economic impact of the operation of the energy system (benefits) and the resources required to purchase, install and operate the unit (costs). It helps determine whether an investment has been worthwhile. However, it can be difficult to assign monetary values to the intangible benefits derived from five hours of lighting per night for a clinic, educational television for a school or higher quality drinking water in a village. The data set presented is a compromise. It contains financial costs and benefits which are obvious and, hence, easy to collect. And it contains quantitative measures (person-days, number of individuals served) of benefits and costs to which a dollar value is hard to assign.

Elements covered in this category include:

- expected or proven lifecycle of each specific energy system and its alternatives,
- primary (direct) benefits,
- secondary (indirect) benefits,
- capital and operation/maintenance costs,

- training costs, and
- jobs created and dollar value thereof.

While the worksheets in Chapter III are presented in a way that makes data collection simpler, some specialists may prefer to go directly to certain sections for analysis. Economists, for example, may wish to start with the fourth category. The order of the sections does not indicate a priority, only an organized method for data collection.

Worksheets

Chapter III

TECHNOLOGY TYPE: PHOTOVOLTAIC ELECTRIC SYSTEM
END-USE EQUIPMENT: _____

1. BACKGROUND

Project Title: _____

Start and Completion Dates: _____

Total Project Budget: _____

Project Purpose: _____

Expected Project Outputs: _____

Organizations Involved (name and type, i.e. profit, nonprofit, gov't.): _____

_____

Salient or Unique Aspects of Dissemination Strategy: _____

_____

2. ENERGY SYSTEM PROFILE

A. Power Supply System Description (include all available manufacturer's specification sheets for system components, and indicate country of origin)

a. Panel Manufacturer/Model No.: _____ Number in Array: ____
Rated Output per Panel: _____ watts at _____ watts/m^2 insolation
Physical Dimensions of each Panel: ____ meters by ____ meters
Wiring Scheme: Number of Panels in Series ____ by ____ in Parallel
Nominal Output Voltage of Each Panel: ____ VDC; Entire Array ____ VDC
Tilt Angle of Array: ____ Degrees Up from Horizontal
Azimuth: ____ Degrees ____ (east/west) of True ____ (north/south)

b. Battery Storage (if provided): ___ Number in Series by ___ in Parallel
Manufacturer and Model No. of Batteries: _____
Rated at ____ amp-hours at Discharge Rate of ___ amps for ___ hours

c. AC/DC Inverter (if provided) Manufacturer and Model No. _____
Type (rotary, solid state, synchronous): _____
Efficiency: ____ % at Rated Capacity: ____ watts

d. Regulator/Charge Controller: Manufacturer/Model No.:_____
Nominal Voltage: _____ volts; Maximum Charging Current: ____ amps

e. Has any backup system been provided? If so, give details: _____
_____
_____
_____(include fuel cost/availability)

B. Site Climatological Data

Site Latitude: _____ ; Longitude: _____ ; Altitude: _____ m
Monthly Mean Maximum Temperature: _____

Monthly Average Daily Total Radiation on Horizontal Plane (by month if available, otherwise best, worst and average month) in kwh/m^2-day:

Source of Data (institution and instruments used): _____

C. End-Use Equipment Description (only fill in blanks which describe your equipment)

a. Water Pumping: Pump/Motor Manufacturer/Model No. _____
Nominal Voltage: _____; Rated Watts: _____
Pump Type (submersible DC, shaft turbine, surface-mounted centrifugal, jack pump, etc.): _____
Rated Output: ____ liters/min; Static Water Level: ____ m
Pumping Water Level: ____ m Suction and ____ m Discharge
Dynamic Head of ____ m Pipe of ____ m Diameter; Well Casing Diam: ___ m
Pressure at Wellhead Discharge: ____ kPa
Pipe Type (galvanized steel, PVC, etc.): _____

b. Lighting: Fixture Manufacturer and Model No.: _____
Bulb Manufacturer and Model No.: _____
Bulb Type (flourescent/incandescent): _____
Number of Bulbs per Fixture: ____ ; Number of Fixtures: ____
Bulbs Rated at ___ volts DC and ___ watts

c. Refrigerator/Freezer: Manufacturer and Model No.: _____
Material Refrigerated/Frozen (vaccine, etc.): _____
Usable Volume of Refrigerator: ____ liters; of Freezer: ____ liters
Number of Compressors: ____ ; Operating Voltage: ____ volts DC
Approx. Amp-Hour Requirements at Steady State to Maintain WHO Standards (4C to 8C inside, 43C outside air temp): _____ amp-hours/day

d. Other (describe in detail): _____

D. Operating Schedule for System

Monthly Average Daily On-Time of End-Use Equipment: ____ hours/day
Seasonal Variations in Demand (explain): _____

Seasonal Variations in Operating Schedule, Due to Fluctuations in Output of PV System (explain): _____

Daily Hours of Operator Attendance Required: _____ hours

3. SYSTEM PERFORMANCE AND OPERATIONS LOG

A. PV Array

Initial Array Output: ____ amps x ____ volts = ____ watts at
Insolation Level of _____ watts/m^2. Date Measured: _____
Final Array Output: _____ amps x ____ volts = ____ watts at
Insolation Level of _____ watts/m^2. Date Measured: _____
(Note: Measure both initial and final array output at noon on bright, sunny days of approximately equal insolation levels.)
Annual Average Daily Output: _____ kwh/day

B. End-Use Equipment

a. Pump: Measured Output: ____ liters/min at ____ watts/m^2 insolation
Annual Average Daily Output: _____ m^3/day
Average Daily Output in m^3/day:____ (best month); ____ (worst month)

b. Lighting: Annual Average Daily Lighting Supplied: ___ hours/day
Ave. Daily Lighting in hours/day:____ (best month); ____ (worst month)

c. Refrigerator/Freezer: Was refrigerator temperature maintained at 4C to 8C throughout operational period? ____ (yes/no)
Was freezer (if provided) temperature maintained at less than -5C throughout operational period? ___ (yes/no)
Was compressor running constantly during operational period? __(yes/no)
Ave. Daily Power Consumed in kwh/day: ___ (hottest month); ___ (coldest)

d. Battery Charging: Monthly Average Energy Delivered to Battery Bank:
_____ amp-hours at ____ volts

C. Operations Log: On a separate sheet of paper, indicate problems which were encountered during system installation and operation. List date, system downtime in hours, days or months, and action taken to remedy the problem. List routine maintenance procedures required and time taken to perform these procedures. List any observations you have which you feel are appropriate to the evaluation of the system, including the advantages and disadvantages of the current system over the previous one.

D. How were end-users of the PV system and their suggestions/opinions integrated into system design, installation and maintenance? (describe)

_____

_____

E. What additional training was given to system installers/operators to ensure successful operation of the system? _____

_____

F. Were actual costs incurred in procurement through operation period within design budget expectations? (explain) _____

4. ECONOMIC ASSESSMENT

A. Costs:

- Capital Equipment Costs (power supply equipment only, including array, batteries, inverter, etc.) $_____
- Capital Equipment Costs (end-use equipment) $_____
- Installation and Shakedown Costs $_____
- Training Costs for Operators/Installers $_____
- Expected or Warranted Lifetime of PV System (years) _____
- Annual Operation/Maintenance Costs for PV System $_____
- Spare Parts Replacement Costs (every ____ years) $_____

B. Benefits:

- Total Annual Output Produced (m^3 of water, kg of milled grain, etc.) _____
- Value of Total Annual Output _____ $_____
- Annual Fossil Fuel Displaced (if any, give type such as coal/oil/gas in kg) _____
- Value of Annual Displaced Fossil Fuel $_____
- Employment Provided (person-hours per month for system operation and maintenance) _____
- Other Benefits (direct and indirect) _____

_____

_____

Was the purchase of this system subsidized or not? _____

This Report Prepared by: _____ on _____ (date)

TECHNOLOGY TYPE: WIND ENERGY CONVERSION SYSTEM (WECS)
END-USE EQUIPMENT: _____

1. BACKGROUND

Project Title: _____

Start and Completion Dates: _____

Total Project Budget: _____

Project Purpose: _____

Expected Project Outputs: _____

Organizations Involved (name and type, i.e. profit, nonprofit, gov't.): _____

Salient or Unique Aspects of Dissemination Strategy: _____

2. ENERGY SYSTEM PROFILE

A. Energy System Description (include all available manufacturers specification sheets for system components and indicate country of origin)

Manufacturer and Model No. of WECS: _____
If Site Built, Give Designer's Name and Source of Design: _____

Rotor Diameter: ___ m; Number of Blades: ___
Rotor RPM ____ at Rated Windspeed of: ____ km/hour
Maximum Rotor RPM: _____ at _____ km/hour
Cut-In Windspeed: ____ km/hour; Cut-Out (Furling) Windspeed: ____ km/hour
Axis Orientation: __ Horizontal or __ Vertical
Height to Rotor Centerline: ____ m
Mechanical Power Transmission (gear or belt): _____; Ratio: _____

B. Site Climatological Data

Site Latitude: _____; Longitude: _____; Altitude: _____ m
Monthly Average Windspeed Measured at ___ m Elevation (if monthly data is not available, give best, worst and average month values, in km/hour): ____

Briefly Describe Seasonal Variations in Windspeed/Direction: _____

Instrument Manufacturer/Model: _____ _____
Windspeed Weibull Distribution Factors (if known): Shape ____ ; Scale: ____
Number of Years of Data on Which Based: ____ years
Site Description (give pertinent details of obstructions, such as hills, trees, buildings, etc. which might affect local wind patterns): _____
_____
_____

C. End-Use Equipment Description (only fill in the section below which describes your equipment)

a. Water Pumping (Direct): Cylinder Type and Material (double/single acting bronze, etc.): _____
Cylinder Length: ____ m; Diameter: ____ m; Drawdown: ____m
Pumping Water Level: _____ m; Discharge Head (to tank, etc.): _____ m
Dynamic Head of ____ m of Pipe of ____ m Diameter
Well Casing Diameter: _____ m; Storage Tank Size (if any): _____ m^3
Output at Rated Windspeed: _____ liters/min

b. Mechanical Output: Shaft Horsepower at Rated Windspeed: _____ kw
Describe End-Use Equipment (grain grinder, rotary pump, etc., and power requirements per unit output): _____
_____
_____

c. Electrical Generation: Electrical Output: _____ kw at Rated Windspeed;
Maximum Output: _____ kw at _____ km/hour
Generator/Alternator (describe): _____
Battery Storage (if any, give manufacturer/model, amp-hour rating and discharge rate, wiring configuration (series/parallel), etc): _____
_____
_____
_____

D. Operating Schedule for System

Monthly Average Daily On-Time for End-Use Equipment: ____ hours/day
Seasonal Variations in Demand (explain): _____
_____
_____
_____

Seasonal Variations in Operating Schedule Due to Fluctuations in Wind Availability (explain): _____
_____
_____
_____

Daily Hours of Operator Attendance Required: ____ hours

3. SYSTEM PERFORMANCE AND OPERATIONS LOG

A. WECS

Monthly Average Windspeed in km/hour: _____

_____

_____

Measured Rotor RPM at Rated Windspeed: _____ RPM
Measured Cut-In Windspeed: ____ km/hour; Cut-Out Windspeed: ____ km/hour

B. End-Use Equipment (only fill in section which describes your equipment)

a. Water Pumping: Measured output at Rated Windspeed: ____ liters/min
Monthly Average Daily Volume of Water Pumped in m^3/day: _____

_____

_____

Demand Designed for: _____ m^3/day
Actual Annual Volume of Water Pumped: _____ m^3/year

b. Mechanical: Measured Mechanical Output at Rated Windspeed: _____ kw
Monthly Average Daily Mechanical Output in kwh/day: _____

_____

_____

Demand Designed for: ____ kwh/day; Actual Annual Output: ____ kwh/year

c. Electrical Generation: Measured Output at Rated Windspeed: _____ kw
Monthly Average Daily Electrical Output in kwh/day: _____

_____

_____

Demand Designed for: _____ kwh/day; Actual Annual Output: _____ kwh/year

C. Operations Log: On a separate sheet of paper, indicate problems which were encountered during system installation and operation. List date, system downtime in hours, days or months, and action taken to remedy the problem. List routine maintenance procedures required and time taken to perform these procedures. List any observations you have which you feel are appropriate to the evaluation of the system.

D. How were end-users of the WECS and their suggestions/opinions integrated into system design, installation and maintenance? (describe in detail): ___

_____

_____

_____

_____(continue on reverse)

Was the purchase of this system subsidized or not? _____

E. Were actual costs incurred in procurement through operation period within design budget expectations? (if not, explain): _____

4. ECONOMIC ASSESSMENT

A. Costs:

- Capital Equipment Costs (WECS only, including head, rotor and tower) $_____
- Capital Equipment Costs (End-Use equipment only, including pumps, batteries, storage tanks, etc.) $_____
- Installation/Shakedown Costs $_____
- Training Costs for Operators/Installers $_____
- Expected or Warranted Lifetime of System (years) _____
- Annual Operations/Maintenance Costs $_____
- Spare Parts Replacement Costs (every ___ years) $_____

B. Benefits:

- Total Average Annual Output (in kwh, m^3 of water, kg milled, etc.) _____
- Value of Total Average Annual Output _____ $_____
- Total Fossil Fuel Displaced Annually (in kg, if any, and specify type (gas/petrol/coal)) _____
- Value of Fossil Fuel Displaced Annually _____ $_____
- Employment (hours of work provided per month for system operation and maintenance) _____
- Other Benefits (direct and indirect, describe): _____

_____

_____

_____

This Report Prepared by: _____ on _____ (date)

TECHNOLOGY TYPE: COOKSTOVE

1. BACKGROUND

Project Title: _____

Project Start and Completion Dates: _____

Total Project Budget: _____

Project Purpose: _____

Expected Project Outputs: _____

Organizations Involved (name and type, i.e. profit, nonprofit, gov't.): _____

Salient or Unique Aspects of Dissemination Strategy: _____

2. ENERGY SYSTEM PROFILE

A. Energy System Description (attach detailed, dimensioned drawing of stove)

Stove Designer: _____; Organization: _____
Stove Manufacturer: _____; Month/Year: _____
Principal Construction Materials: _____
Chimney (yes/no): _____; Describe Number and Size of Pot Openings: _____
Overall Stove Dimensions: _____ cm; Portable? (yes/no): _____
Kind, Size and Location of Draft Controls: _____
Primary Foods Cooked: _____
Previous Cooking Device Used (describe): _____
Is Stove Also Used for Space Heating? (yes/no): ____

B. Site Climatological Data

Site Latitude: _____; Longitude: _____; Altitude: _____ m
Monthly Average Temperatures: _____
Degree C Days (if known): _____ Heating DD; _____ Cooling DD

C. Feedstock/Operating Schedule

Principal Fuel(s) Used: _____ (if wood, include species)
Seasonal Variation in Fuel Type (describe): _____

Describe Daily Use Schedule (e.g. 5-8 am and 5-7 pm Monday through Saturday and 11-3 pm on Sunday): _____

_____

Approximate Daily Fuel Consumption at this Schedule: _____ kg
Seasonal Variation in Fuel Use (describe in kg): _____
Total Time Required to Gather Daily Fuel Required: _____ hours
Distance Required to Travel to Gather Daily Fuel Requirements: _____ km

3. STOVE PERFORMANCE AND OPERATIONS LOG

A. Stove Performance

a. Water Boiling Tests for Previously Used Stove (or fire):
Mass of Water: Initial: _____ kg; Final: _____ kg; Mass of Pot: _____ kg
Initial Temperature of Water: _____; Final Temperature of Water: _____
Total Mass of Fuel Burned: _____ kg (initial fuel mass minus remainder)
Fuel Type: _____; Calorific Value (if known): _____ kJ/kg
Time From Start of Test to Rolling Boil: _____ minutes

b. Water Boiling Tests for Improved Stove:
Mass of Water: Initial:_____ kg; Final: _____ kg; Mass of Pot: _____ kg
Initial Temperature of Water: _____; Final Temperature of Water: _____
Total Mass of Fuel Burned: _____ kg (initial fuel mass minus remainder)
Fuel Type: _____; Calorific Value (if known): _____ kJ/kg
Time from Start of Test to Rolling Boil: _____ minutes

c. Qualitative Performance Measures:
Is stove easy to use compared to previously used stove? (yes/no): _____
Does stove meet space heating needs of owner? (if any, yes/no): _____
If not, explain why not: _____

_____

Does chimney successfully remove smoke from building? (yes/no): _____
Number of this type of stove in use in your area (if known): _____

d. If controlled cooking tests were performed, give foods tested and describe advantages/disadvantages of new stove over previous stove in terms of time and fuel savings: _____

_____

_____

_____

B. Operations Log: On a separate sheet of paper, indicate problems which were encountered during stove construction (if owner built), installation and operation. List dates and construction time, any problems encountered and action taken to remedy these problems. List any routine maintenance procedures required and time taken to perform these procedures. List any other observations you feel are appropriate to the evaluation of the stove.

C. How were end-users of the stove and their suggestions/opinions integrated into stove design, installation and maintenance procedures? (describe in detail): _____

_____ (continue on reverse)

D. What additional training was needed to provide to stove installers/users to insure successful construction and use? _____

_____

_____

Was the purchase of this stove subsidized or not? _____

E. Were actual costs incurred in procurement through operation period within design budget expectations? _____

4. ECONOMIC ASSESSMENT

A. Costs:

- o Capital Cost for Stove (include stove body, chimney, any fittings, etc.)* $_____
- o Installation/Shakedown Cost* $_____
- o Training Cost for Installers/Builders/Users $_____
- o Annual Operation/Maintenance Cost* $_____
- o Expected Lifetime of Stove (years) _____

B. Benefits:

- o Average Daily Fuel Savings (kg of fuel compared to previous stove) _____
- o Value of Average Daily Fuel Savings $_____
- o Average Daily Time Savings in Fuel Collection (hours saved compared to previous stove) _____
- o Number of Jobs Created for Installers/Builders _____
- o Other Benefits (direct and indirect): _____

_____

* If site built, give approx. hours for construction and local labor cost/hr: _____ hours @ _____ $/hour.

This Report Prepared by: _____ on _____ (date)

TECHNOLOGY TYPE: ACTIVE SOLAR THERMAL SYSTEM
END-USE EQUIPMENT: _____

1. BACKGROUND

Project Title: _____

Project Start and Completion Dates: _____

Total Project Budget: _____

Project Purpose: _____

Expected Project Outputs: _____

Organizations Involved (name and type, i.e. profit, nonprofit, gov't.): _____
_____

Salient or Unique Aspects of Dissemination Strategy: _____
_____

2. ENERGY SYSTEM PROFILE

A. Energy Supply System Description (include all available manufacturer's specification sheets for components, and indicate country of origin)

Application (space heating, residential, commercial, etc.): _____
System Designer: _____ of _____ (institution)
Sizing/Design Method Employed (describe): _____
_____
(Note: Attach a labelled schematic drawing of the system to this report.)

Array: Number of Collectors in Array: ___; Total Collector Area: ___ m^2
Manufacturer and Model No.(specify if site built): _____
Number of Glazings: ____ ; Selective Surface Absorber: _____ (yes/no)
Collector Orientation (azimuth): _____ ; Tilt Angle ____ (degrees)
Collector Heat Transfer Fluid (water, air, glycol etc.): _____
Fluid Mass Flowrate: _____ kg/min
Freeze Protection Strategy (if required) (double loop w/ antifreeze, drain back, draindown, etc.): _____
Describe Heat Exchanger (if used, i.e., single pass, shell-in-tube, etc.):
_____

Storage: Storage Media (water, rockbox, phase change etc.): _____
Storage Mass: _____ kg; Insulation Material/Thickness: _____

B. Site Climatological Data

Site Latitude: _____ ; Longitude: _____ ; Altitude: _____ m
Average Daily Radiation on Horizontal Plane (by month if available, if not, give best, worst and annual average month) in kwh/m^2-day: _____

_____

_____

Heating Degree-C Days: _____ ; Cooling Degree-C Days: _____
Maximum/Minimum Daily Temperatures by Month: _____

_____

_____

Source of Data (institution and instruments used): _____

_____

Site Solar Exposure During Heating Season:
Completely Exposed: ____ ; Minor Shading: ____ ; Significant Shading: _____

C. End-Use Equipment Description (only fill in sections which describe your equipment)

Load Type(water/space heating, crop drying, etc.): _____
Required Hot Water Temperature to Load: _____ ; Groundwater Temp: _____
Mass Flowrate of Hot Water through Load: _____ (kg/hour)
Daily and Seasonal Load Schedule (hours/day and days/month, including any seasonal variations): _____

_____

_____

Is heated water recycled storage or dumped after load? _____
If the load is currently being met by other equipment, describe in detail:

_____

_____

_____ (continue on reverse)

a. Solar Hot Water Heating: Demand: _____ liters/day at ____ degrees C
Auxiliary Water Heating Source (electric, gas, etc.): _____

b. Building Space Heating: Building Overall Heat Loss Coefficient in watts/C-day:_____ ; Normal Use (residence, office, etc.): _____
Auxiliary Heating System Type (oil-fired hot air furnace, gas-fired hydronic (water) heater, etc.): _____
Thermostat Set Point (also explain any daily or seasonal variation): ___

_____

(Include plan and elevation drawings, giving major dimensions.)

c. For Industrial/Commercial Use (describe in detail equipment parameters and energy requirements): _____

_____

_____

_____(continue on reverse)

D. Operating Schedule for System

Average Daily On-Time of End-Use Equipment: ____ hours/day; ____ days/week
Seasonal Variations in Demand (explain in detail): _____

_____

_____

Seasonal Variation in Operating Schedule, Due to Fluctuations in Output of Solar Array (explain in detail): _____

_____

_____

Describe Daily Demand for Heated Water: _____

_____

Average Daily Number of Hours of Operator Attendance Required: _____ hours

3. SYSTEM PERFORMANCE AND OPERATIONS LOG

A. Collector Array

Average Daily Radiation on Collector Plane (monthly if available, otherwise best, worst month and annual average, in kwh/m^2-day): _____

_____

_____

On a separate sheet of paper, construct a matrix of the following data: For at least ten measured readings averaged over fifteen minute periods, give 1) Collector Fluid Inlet Temperature; 2) Collector Fluid Outlet Temperature; 3) Ambient Air Temperature; 4) Collector Fluid Flowrate (kg/hr); 5) Radiation (insolation) on Collector Plane (w/m^2).

B. End-Use Equipment (fill in only blanks which apply to your system)

a. Hot Water Heating: Average Monthly Energy Supplied by Auxiliary Source (electric, gas, etc.): _____(kwh if electric, kg if gas, etc.) (If no auxiliary, average hot water temperature to load by month): _____

_____

b. Space Heating: Average Monthly Energy Supplied by Auxiliary Source (electric, gas, etc.): _____(kwh if electric, kg if gas, etc.) (If no auxiliary, average air temperature inside building by month): _____

_____

c. Commercial or Industrial Use: Describe Flowrates and Temperatures of Solar Heated Fluid Entering and Exiting Equipment: _____

_____

_____

_____(continue on reverse)

Describe Auxiliary Fuel Use (if any, by month): _____

_____

C. Operations Log: On a separate sheet of paper, indicate problems which were encountered during system installation and operation. List date, system downtime in hours, days or months, and action taken to remedy the problem. List routine maintenance procedures required and time taken to perform these procedures. List any observations you have which you feel are appropriate to the evaluation of this system, including the advantages and disadvantages of this system over previous equipment used for this task.

D. How were end-users of this system and their suggestions/opinions integrated into system design, installation and maintenance? (describe in detail): ____

_____

_____

_____ (continue on reverse)

Was the purchase of this system subsidized or not? _____

E. What additional training was given to system installers/operators to ensure successful operation of the system? _____

_____

_____

F. Were actual costs incurred in procurement through operation period within design budget expectations? (explain): _____

_____

_____

4. ECONOMIC ASSESSMENT

A. Costs:

- Capital Equipment Costs (Solar System only, including collectors, tank, pumps, pipe, etc.) $_____
- Capital Equipment Costs (Auxiliary heating system components only, gas furnace, ductwork, etc.) $_____
- Installation/Shakedown Costs $_____
- Training Costs for Operators/Installers $_____
- Annual Operation/Maintenance Costs for System $_____
- Spare Parts Replacement Costs (every ____ years) $_____
- Expected Lifetime of Solar System (years) _____

B. Benefits:

- Average Daily Fuel Savings (kg of fuel compared to previous system, if any) $_____
- Value of Fossil Fuel Displaced (if any) $_____
- Employment Provided (person hours per month) for System Operation/Maintenance _____
- Other Benefits (increased reliability, comfort levels, reduced pollution, etc.; describe): _____

_____

_____

This Report Prepared by: _____ on _____ (date)

TECHNOLOGY TYPE: PASSIVE SOLAR BUILDING

1. BACKGROUND

Project Title: _____

Project Start and Completion Dates: _____

Project Total Budget: _____

Project Purpose: _____

Expected Project Outputs: _____

Organizations Involved (name and type, i.e. profit, nonprofit, gov't.): _____

_____

Salient or Unique Aspects of Dissemination Strategy: _____

_____

2. ENERGY SYSTEM PROFILE

A. Building Description (include all available manufacturer's specification sheets for non-indigenous materials, and indicate country of origin)

Building Designed By: _____ of _____ (institution)
Building Constructed by: _____ in _____ (month/year)
Principal Use (residential, commercial, industrial, etc.): _____
Plan Based on: Original Design __ (x) or
Existing Design __ (x) from _____ (source)
Description of Layout (room placement, number, etc.): _____

_____

_____

_____

Building Overall Floor Area: _____ m^2; Building Volume: _____ m^3
(Note: Attach building plan and elevations.)
Design Features Emphasize _____ (cooling/heating) loads
Describe wall and ceiling/roof cross-sections (with sketches, including all dimensions, on reverse): _____

_____

_____

Describe Passive and Energy Conserving Design Features (give lengths of overhangs, window placement and dimensions, location and thickness of any insulation, orientation of main axis, etc.): _____

_____

_____

_____ (continue on reverse)

Auxiliary Heating and/or Cooling System Type (i.e., vapor compression air conditioning, gas/oil hot air heating, etc.): _____

B. Site Climatological Data

Building is located at _____ Latitude; _____ Longitude; _____ m Altitude
Monthly Average Daily Radiation on Horizontal Plane (by month if available, otherwise give best month and worst month) in kwh/m^2-day: _____

_____

_____

Annual Heating Degree-C Days: _____; Annual Cooling Degree-C Days: _____
Maximum/Minimum Temperatures by Month: _____

_____

_____

Source of Data (institution and instruments used): _____

_____

C. Operating Schedule for Building (office/residence use, occupancy in days per week, hours per day, etc.): _____

3. SYSTEM PERFORMANCE AND OPERATIONS LOG

A. Passive Solar Performance

Describe Internal Gains (number of occupants, major appliances, measured fuel use in kg, m^3 or kwh per day, and use schedule for each): _____

_____

_____

_____ (continue on reverse)

Thermostat Setting (if any, also describe day/night or summer/winter variation): _____

Briefly Describe Monitoring Equipment and Procedure: _____

_____

_____

_____(continue on reverse)

On a separate sheet of paper, make a table of the following parameters and list them by month: 1) Mean daily maximum and minimum outdoor temperature; 2) Mean daily maximum and minimum indoor temperature; 3) Mean daily radiation on horizontal plane in kwh/m^2-day. In the last column for each month, indicate occupants' reaction to the comfort levels maintained in the building, particularly with regard to overheating in summer or insufficient heating in winter.

B. Operations Log: On a separate sheet of paper, indicate problems which were encountered during the design, construction and operation of the building. List date and action taken to remedy the situation. List any routine maintenance procedures required and time taken to perform these. List any observations you have which you feel are appropriate to system evaluation, including the advantages and disadvantages of this building over others with the same use.

Describe any required occupant interaction with the building (i.e., use of manual shading devices, operable vents, etc.): _____

_____

_____

If solar features were retrofitted, describe magnitude of energy savings compared to previous system and method of calculation: _____

_____

_____

C. How were end-users of the passive solar building and their suggestions and opinions integrated into building design, construction and use? (describe):

_____

_____

_____

Was the purchase of this building subsidized or not? _____

D. What additional training was necessary for the design and construction of the building? _____

_____

E. Were actual costs incurred in procurement through operation period within design budget expectations? (explain): _____

3. ECONOMIC ASSESSMENT

A. Costs:

- Initial Capital Cost of Building Materials $_____
- Design and Construction Labor Cost $_____
- Additional Training Costs (if required) $_____
- Expected Operation/Maintenance Costs (per year) $_____
- Local Cost of Replacement Fuel (per unit) $_____/____
- Expected Lifetime of Building (years) _____

B. Benefits:

- Annual Reduction in Purchased Auxiliary Energy (or increase, if any) $_____
- Value of Fuel Savings $_____
- Employment Provided (person hours per month) for System Operation/Maintenance _____
- Other Benefits (direct and indirect, such as increased comfort level for either heating or cooling, etc.) Describe: _____

_____

_____

_____

This Report Prepared by: _____ on _____ (date)

Samples

TECHNOLOGY TYPE: PHOTOVOLTAIC ELECTRIC SYSTEM
END-USE EQUIPMENT: water pump

1. BACKGROUND

Project Title: Botswana Renewable Energy Technology Project

Start and Completion Dates: 1/1/84 - 8/6/85

Total Project Budget: $ 180,000

Project Purpose: Comparative performance testing of PV pumps

Expected Project Outputs: Technical/economic data on 4 PV pumps

Organizations Involved (name and type, i.e. rofit, nonprofit, gov't.): MMRWA, USAID

Salient or Unique Aspects of Dissemination Strategy: _____

2. ENERGY SYSTEM PROFILE

A. Power Supply System Description (include all available manufacturer's specification sheets for system components, and indicate country of origin)

a. Panel Manufacturer/Model No.: ARCO Solar M-51 Number in Array: 12
Rated Output per Panel: 40 watts at 1000 watts/m^2 insolation
Physical Dimensions of each Panel: 1.22 meters by .305 meters
Wiring Scheme: Number of Panels in Series 3 by 4 in Parallel
Nominal Output Voltage of Each Panel: 15.5 VDC; Entire Array 46.5 VDC
Tilt Angle of Array: 15/30 Degrees Up from Horizontal (summer/winter switch
Azimuth: 0 Degrees — (east/west) of True NORTH (north/south)

b. Battery Storage (if provided): ___ Number in Series by ___ in Parallel
Manufacturer and Model No. of Batteries: none
Rated at ____ amp-hours at Discharge Rate of ___ amps for ___ hours

c. AC/DC Inverter (if provided) Manufacturer and Model No. none
Type (rotary, solid state, synchronous): _____
Efficiency: ____ % at Rated Capacity: ____ watts

d. Regulator/Charge Controller: Manufacturer/Model No.: SCI-2 w/ NEMA-4 box
Nominal Voltage: 48 volts; Maximum Charging Current: 30 amps

e. Has any backup system been provided? If so, give details: none, backup diesel (4 HP) available if necessary, diesel fuel cost approximately P0.50 per liter
(include fuel cost/availability)

B. Site Climatological Data

Site Latitude: 25°S ; Longitude: 23°E ; Altitude: 1000 m
Monthly Mean Maximum Temperature: JAN-32.6, FEB-31.2, MAR-31.1, APR-27.2, MAY-24.6, JUNE-22.2, JULY-22.3, AUG-25.5, SEPT-29.1, OCT-30.7, NOV-31.2, DEC-32.1
Monthly Average Daily Total Radiation on Horizontal Plane (by month if available, otherwise best, worst and average month) in kwh/m^2-day:
JAN-7.1, FEB-6.2, MAR-6.1, APRIL-5.0, MAY-4.5, JUNE-4.7, JULY-5.0, AUG-5.2, SEPT-6.0, OCT-6.5, NOV-6.8, DEC-7.4
Source of Data (institution and instruments used): Univ. of Botswana, Temp - Fluke integrating recorder; Solar insolation - Eppley Black/White Pyranometer

C. End-Use Equipment Description (only fill in blanks which describe your equipment)

a. Water Pumping: Pump/Motor Manufacturer/Model No. Jacuzzi 54XP-4
Nominal Voltage: 45V ; Rated Watts: 455
Pump Type (submersible DC, shaft turbine, surface-mounted centrifugal, jack pump, etc.): Submersible DC, permanent magnet motor
Rated Output: 38.5 liters/min; Static Water Level: 3 m
Pumping Water Level: 0 m Suction and 12 m Discharge
Dynamic Head of 18 m Pipe of .051 m Diameter; Well Casing Diam: .152 m
Pressure at Wellhead Discharge: 100 kPa
Pipe Type (galvanized steel, PVC, etc.): galvanized steel

b. Lighting: Fixture Manufacturer and Model No.: none
Bulb Manufacturer and Model No.: ____
Bulb Type (flourescent/incandescent): ____
Number of Bulbs per Fixture: ____ ; Number of Fixtures: ____
Bulbs Rated at ___ volts DC and ___ watts

c. Refrigerator/Freezer: Manufacturer and Model No.: none
Material Refrigerated/Frozen (vaccine, etc.): ____
Usable Volume of Refrigerator: ____ liters; of Freezer: ____ liters
Number of Compressors: ____ ; Operating Voltage: ____ volts DC
Approx. Amp-Hour Requirements at Steady State to Maintain WHO Standards (4C to 8C inside, 43C outside air temp): ____ amp-hours/day

d. Other (describe in detail): none

D. Operating Schedule for System

Monthly Average Daily On-Time of End-Use Equipment: 8 hours/day
Seasonal Variations in Demand (explain): water demand approximately coincides with spring/summer crop growing season

Seasonal Variations in Operating Schedule, Due to Fluctuations in Output of PV System (explain): highest insolation occurs during crop growing season and period of highest drinking water demands in the hot summer

Daily Hours of Operator Attendance Required: 0 hours

3. SYSTEM PERFORMANCE AND OPERATIONS LOG

A. PV Array

Initial Array Output: 9.4 amps x 49.3 volts = 463 watts at
Insolation Level of 1042 watts/m^2. Date Measured: 12/16/83
Final Array Output: 9.3 amps x 49.1 volts = 457 watts at
Insolation Level of 1056 watts/m^2. Date Measured: 3/16/84
(Note: Measure both initial and final array output at noon on bright, sunny days of approximately equal insolation levels.)
Annual Average Daily Output: 3.15 kwh/day

B. End-Use Equipment

a. Pump: Measured Output: 37 liters/min at 1000 watts/m^2 insolation
Annual Average Daily Output: 14.9 m^3/day
Average Daily Output in m^3/day: 19.4 (best month); 11.8 (worst month)

b. Lighting: Annual Average Daily Lighting Supplied: ___ hours/day
Ave. Daily Lighting in hours/day: ____ (best month); ____ (worst month)

c. Refrigerator/Freezer: Was refrigerator temperature maintained at 4C to 8C throughout operational period? ____ (yes/no)
Was freezer (if provided) temperature maintained at less than -5C throughout operational period? ___ (yes/no)
Was compressor running constantly during operational period? __(yes/no)
Ave. Daily Power Consumed in kwh/day: ___ (hottest month); ___ (coldest)

d. Battery Charging: Monthly Average Energy Delivered to Battery Bank:
_____ amp-hours at ____ volts

C. Operations Log: On a separate sheet of paper, indicate problems which were encountered during system installation and operation. List date, system downtime in hours, days or months, and action taken to remedy the problem. List routine maintenance procedures required and time taken to perform these procedures. List any observations you have which you feel are appropriate to the evaluation of the system, including the advantages and disadvantages of the current system over the previous one.

D. How were end-users of the PV system and their suggestions/opinions integrated into system design, installation and maintenance? (describe)

_____

_____

E. What additional training was given to system installers/operators to ensure successful operation of the system? _____

_____

F. Were actual costs incurred in procurement through operation period within design budget expectations? (explain) _____

4. ECONOMIC ASSESSMENT

A. Costs:

- Capital Equipment Costs (power supply equipment only, including array, batteries, inverter, etc.) $ 4560
- Capital Equipment Costs (end-use equipment) $ 2575
- Installation and Shakedown Costs $ 1000
- Training Costs for Operators/Installers $ 400
- Expected or Warranted Lifetime of PV System (years) 20
- Annual Operation/Maintenance Costs for PV System $ 200
- Spare Parts Replacement Costs (every 6 years) $ 300

B. Benefits:

- Total Annual Output Produced (m^3 of water, kg of milled grain, etc.) 5439 m^3 water
- Value of Total Annual Output @ $1.00/$m^3$ $ 5439
- Annual Fossil Fuel Displaced (if any, give type such as coal/oil/gas in kg) 350 liters diesel
- Value of Annual Displaced Fossil Fuel @ $0.50/liter $ 175
- Employment Provided (person-hours per month for system operation and maintenance) 10
- Other Benefits (direct and indirect) very reliable, noise free operation (no unexpected downtime thus far)

Was the purchase of this system subsidized or not? yes

This Report Prepared by: Rick McGowan on 2/11/84 (date)

TECHNOLOGY TYPE: WIND ENERGY CONVERSION SYSTEM (WECS)
END-USE EQUIPMENT: Water pump

1. BACKGROUND

Project Title: Botswana Renewable Energy Technology

Start and Completion Dates: 1/1/84 - 8/6/85

Total Project Budget: $125,000

Project Purpose: Comparative performance testing of windmill pumpers

Expected Project Outputs: technical/economic data on 8 windmills

Organizations Involved (name and type, i.e. profit, nonprofit, gov't.): MMRWA, USAID

Salient or Unique Aspects of Dissemination Strategy: _____

2. ENERGY SYSTEM PROFILE

A. Energy System Description (include all available manufacturers specification sheets for system components and indicate country of origin)

Manufacturer and Model No. of WECS: Wind Baron Mark IV
If Site Built, Give Designer's Name and Source of Design: _____

Rotor Diameter: 6.4 m; Number of Blades: 18
Rotor RPM 50 at Rated Windspeed of: 40 km/hour
Maximum Rotor RPM: 68 at 50 km/hour
Cut-In Windspeed: 6.4 km/hour; Cut-Out (Furling) Windspeed: 35 km/hour
Axis Orientation: ✓ Horizontal or __ Vertical
Height to Rotor Centerline: 14.3 m
Mechanical Power Transmission (gear or belt): gear; Ratio: 3.25:1

B. Site Climatological Data

Site Latitude: 21°S; Longitude: 27°E; Altitude: 1200 m
Monthly Average Windspeed Measured at ___ m Elevation (if monthly data is not available, give best, worst and average month values, in km/hour):
JAN - 10.9, FEB - 10.7, MARCH - 10.7, APRIL - 9.1, MAY - 7.8, JUNE - 7.8, JULY - 8.6, AUGUST - 10.2, SEPT. - 12.8, OCT - 14.4, NOV - 12.6, DEC - 11.4
Briefly Describe Seasonal Variations in Windspeed/Direction: lowest average winds occur during winter, early spring and summer winds are highest and most gusty, winds mainly from east all year.

Instrument Manufacturer/Model: SECONDWIND AL-2000 Windlogger
Windspeed Weibull Distribution Factors (if known): Shape 1.75 ; Scale: 3.3
Number of Years of Data on Which Based: 6 years
Site Description (give pertinent details of obstructions, such as hills, trees, buildings, etc. which might affect local wind patterns): very low rolling hills, low (1 m.) shrubs in desert, no large buildings nearby.

C. End-Use Equipment Description (only fill in the section below which describes your equipment)

a. Water Pumping (Direct): Cylinder Type and Material (double/single acting bronze, etc.): single action, bronze
Cylinder Length: 0.43 m; Diameter: 0.102 m; Drawdown: 3 m
Pumping Water Level: 30 m; Discharge Head (to tank, etc.): 4.0 m
Dynamic Head of 38 m of Pipe of .051 m Diameter
Well Casing Diameter: 0.152 m; Storage Tank Size (if any): 100 m^3
Output at Rated Windspeed: 43.2 liters/min

b. Mechanical Output: Shaft Horsepower at Rated Windspeed: _____ kw
Describe End-Use Equipment (grain grinder, rotary pump, etc., and power requirements per unit output): _____

c. Electrical Generation: Electrical Output: _____ kw at Rated Windspeed;
Maximum Output: _____ kw at _____ km/hour
Generator/Alternator (describe): _____
Battery Storage (if any, give manufacturer/model, amp-hour rating and discharge rate, wiring configuration (series/parallel), etc): _____

D. Operating Schedule for System

Monthly Average Daily On-Time for End-Use Equipment: 5 hours/day
Seasonal Variations in Demand (explain): highest demand for water occurs October through January for vegetable/grain and drinking water. This coincides with the period of highest annual windspeed.
Seasonal Variations in Operating Schedule Due to Fluctuations in Wind Availability (explain): see above

Daily Hours of Operator Attendance Required: 0 hours

3. SYSTEM PERFORMANCE AND OPERATIONS LOG

A. WECS

Monthly Average Windspeed in km/hour: JAN- 10.2, FEB- 9.9, MARCH- 10.6, APRIL- 9.3, MAY- 7.9, JUNE- 7.5, JULY- 8.8, AUGUST - 10.3, SEPT- 12.9, OCT- 13.9, NOV - 12.9, DEC - 10.9

Measured Rotor RPM at Rated Windspeed: 48 RPM

Measured Cut-In Windspeed: 6.3 km/hour; Cut-Out Windspeed: 34 km/hour

B. End-Use Equipment (only fill in section which describes your equipment)

a. Water Pumping: Measured output at Rated Windspeed: 45 liters/min

Monthly Average Daily Volume of Water Pumped in m^3/day: JAN- 18.4, FEB- 17.6, MAR- 19.4, APRIL- 16.1, MAY- 12.9, JUNE- 11.9, JULY- 14.9, AUG- 18.6, SEPT- 25.5, OCT- 28.3, NOV- 25.5, DEC- 20.2

Demand Designed for: 20 m^3/day

Actual Annual Volume of Water Pumped: 6975 m^3/year

b. Mechanical: Measured Mechanical Output at Rated Windspeed: _____ kw

Monthly Average Daily Mechanical Output in kwh/day: _____

Demand Designed for: ____ kwh/day; Actual Annual Output: ____ kwh/year

c. Electrical Generation: Measured Output at Rated Windspeed: _____ kw

Monthly Average Daily Electrical Output in kwh/day: _____

Demand Designed for: _____ kwh/day; Actual Annual Output: _____ kwh/year

C. Operations Log: On a separate sheet of paper, indicate problems which were encountered during system installation and operation. List date, system downtime in hours, days or months, and action taken to remedy the problem. List routine maintenance procedures required and time taken to perform these procedures. List any observations you have which you feel are appropriate to the evaluation of the system.

D. How were end-users of the WECS and their suggestions/opinions integrated into system design, installation and maintenance? (describe in detail): ___

(continue on reverse)

Was the purchase of this system subsidized or not? yes

E. Were actual costs incurred in procurement through operation period within design budget expectations? (if not, explain): yes

4. ECONOMIC ASSESSMENT

A. Costs:

- Capital Equipment Costs (WECS only, including head, rotor and tower) $ 15,000
- Capital Equipment Costs (End-Use equipment only, including pumps, batteries, storage tanks, etc.) $ 11,000
- Installation/Shakedown Costs $ 2,000
- Training Costs for Operators/Installers $ 500
- Expected or Warranted Lifetime of System (years) 20
- Annual Operations/Maintenance Costs $ 200
- Spare Parts Replacement Costs (every 5 years) $ 500

B. Benefits:

- Total Average Annual Output (in kwh, m^3 of water, kg milled, etc.) 6975 m^3 of water
- Value of Total Average Annual Output @ $1.00/$m^3$ $ 6975
- Total Fossil Fuel Displaced Annually (in kg, if any, and specify type (gas/petrol/coal)) ~450 liters diesel
- Value of Fossil Fuel Displaced Annually @ $0.50/liter $ 225
- Employment (hours of work provided per month for system operation and maintenance) 8
- Other Benefits (direct and indirect, describe): no noise or diesel fumes, unnecessary to haul fuel from Francistown, unnecessary to hire diesel pumping attendant

This Report Prepared by: Rick McGowan on 2/10/84 (date)

TECHNOLOGY TYPE: COOKSTOVE

1. BACKGROUND

Project Title: Foyers Moderne de Kaya (Modern Stoves of Kaya, Upper Volta)

Project Start and Completion Dates: 1980(?) - present

Total Project Budget: unknown

Project Purpose: to develop and disseminate low-cost, efficient cookstoves

Expected Project Outputs: commercially sold site-built cookstoves

Organizations Involved (name and type, i.e. profit, nonprofit, gov't.): Foyers Moderne de Kaya, CILSS, Institut Voltaique de l'Energie

Salient or Unique Aspects of Dissemination Strategy: Commercial Sales

2. ENERGY SYSTEM PROFILE

A. Energy System Description (attach detailed, dimensioned drawing of stove)

Stove Designer: _____; Organization: Foyers Moderne de Kaya
Stove Manufacturer: site-built; Month/Year: Spring 1983
Principal Construction Materials: banco bricks w/coating of cement, sand + clay
Chimney (yes/no): _____; Describe Number and Size of Pot Openings: 2 openings, each approximately 27 cms. (See attached schematic drawing)
Overall Stove Dimensions: 105x57x22 cm; Portable? (yes/no): no
Kind, Size and Location of Draft Controls: none

Primary Foods Cooked: Millet (Toh)
Previous Cooking Device Used (describe): 3 stone fire
Is Stove Also Used for Space Heating? (yes/no): no

B. Site Climatological Data

Site Latitude: 13° N; Longitude: 1° E; Altitude: _____ m
Monthly Average Temperatures: _____

Degree C Days (if known): unknown Heating DD; unknown Cooling DD

C. Feedstock/Operating Schedule

Principal Fuel(s) Used: eucalyptus camaldulensis (if wood, include species)
Seasonal Variation in Fuel Type (describe): some use of millet stalks for cooking right after harvest season

Describe Daily Use Schedule (e.g. 5-8 am and 5-7 pm Monday through Saturday and 11-3 pm on Sunday): morning hot drinks and one main meal/day

Approximate Daily Fuel Consumption at this Schedule: .7-.9 kg
Seasonal Variation in Fuel Use (describe in kg): unknown
Total Time Required to Gather Daily Fuel Required: 1-3 hours
Distance Required to Travel to Gather Daily Fuel Requirements: 2-5 km

3. STOVE PERFORMANCE AND OPERATIONS LOG

A. Stove Performance

a. Water Boiling Tests for Previously Used Stove (or fire): 3 Stone Fire
Mass of Water: Initial: 2.985 kg; Final: 2.702 kg; Mass of Pot: 1.355 kg
Initial Temperature of Water: 21°C ; Final Temperature of Water: 98°C
Total Mass of Fuel Burned: .686 kg (initial fuel mass minus remainder)
Fuel Type: eucalyptus wood chips ; Calorific Value (if known): 17.15 kJ/kg
Time From Start of Test to Rolling Boil: 28 minutes

b. Water Boiling Tests for Improved Stove:
Mass of Water: Initial: 3.011 kg; Final: 2.686 kg; Mass of Pot: 1.347 kg
Initial Temperature of Water: 21°C ; Final Temperature of Water: 100°C
Total Mass of Fuel Burned: 1.425 kg (initial fuel mass minus remainder)
Fuel Type: eucalyptus ; Calorific Value (if known): 17.15 kJ/kg
Time from Start of Test to Rolling Boil: 29 minutes

c. Qualitative Performance Measures:
Is stove easy to use compared to previously used stove? (yes/no): yes
Does stove meet space heating needs of owner? (if any, yes/no): N/A
If not, explain why not: _____

Does chimney successfully remove smoke from building? (yes/no): yes
Number of this type of stove in use in your area (if known): 50+

d. If controlled cooking tests were performed, give foods tested and describe advantages/disadvantages of new stove over previous stove in terms of time and fuel savings: not performed

B. Operations Log: On a separate sheet of paper, indicate problems which were encountered during stove construction (if owner built), installation and operation. List dates and construction time, any problems encountered and action taken to remedy these problems. List any routine maintenance procedures required and time taken to perform these procedures. List any other observations you feel are appropriate to the evaluation of the stove.

C. How were end-users of the stove and their suggestions/opinions integrated into stove design, installation and maintenance procedures? (describe in detail): _____

(continue on reverse)

D. What additional training was needed to provide to stove installers/users to insure successful construction and use? users received 1-2day training session on construction/use

Was the purchase of this stove subsidized or not? no

E. Were actual costs incurred in procurement through operation period within design budget expectations? yes

4. ECONOMIC ASSESSMENT

A. Costs:

- o Capital Cost for Stove (include stove body, chimney, any fittings, etc.)* $ 12-15
- o Installation/Shakedown Cost* $ _____
- o Training Cost for Installers/Builders/Users $ _____
- o Annual Operation/Maintenance Cost* $ 1-3
- o Expected Lifetime of Stove (years) 2-5 years

B. Benefits:

- o Average Daily Fuel Savings (kg of fuel compared to previous stove) _____
- o Value of Average Daily Fuel Savings $ _____
- o Average Daily Time Savings in Fuel Collection (hours saved compared to previous stove) _____
- o Number of Jobs Created for Installers/Builders _____
- o Other Benefits (direct and indirect): _____

* If site built, give approx. hours for construction and local labor cost/hr: 8 hours @ _____ $/hour.

This Report Prepared by: _____ on _____ (date)

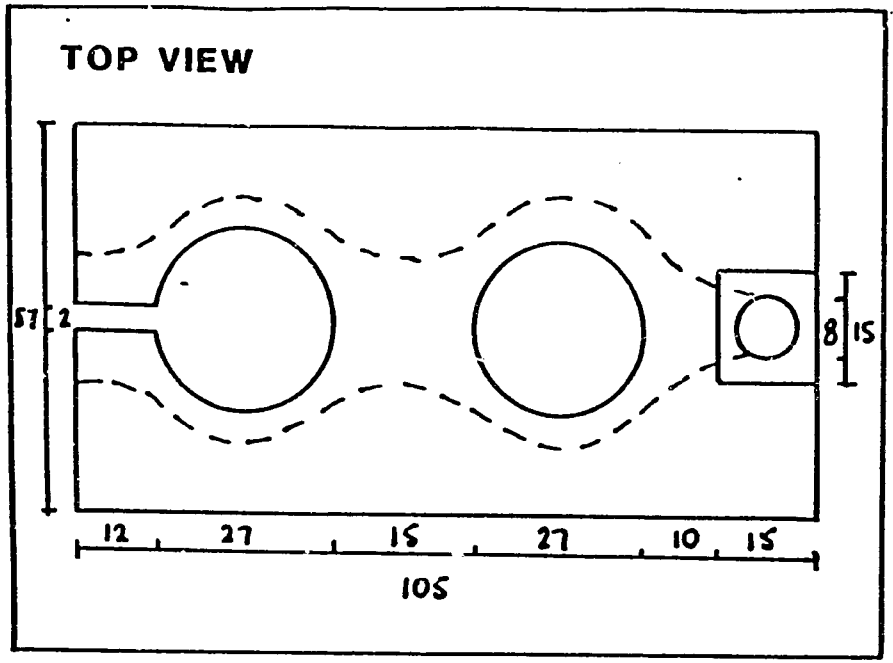
TOP VIEW
57
2
8
15
12
27
15
27
10
15
105

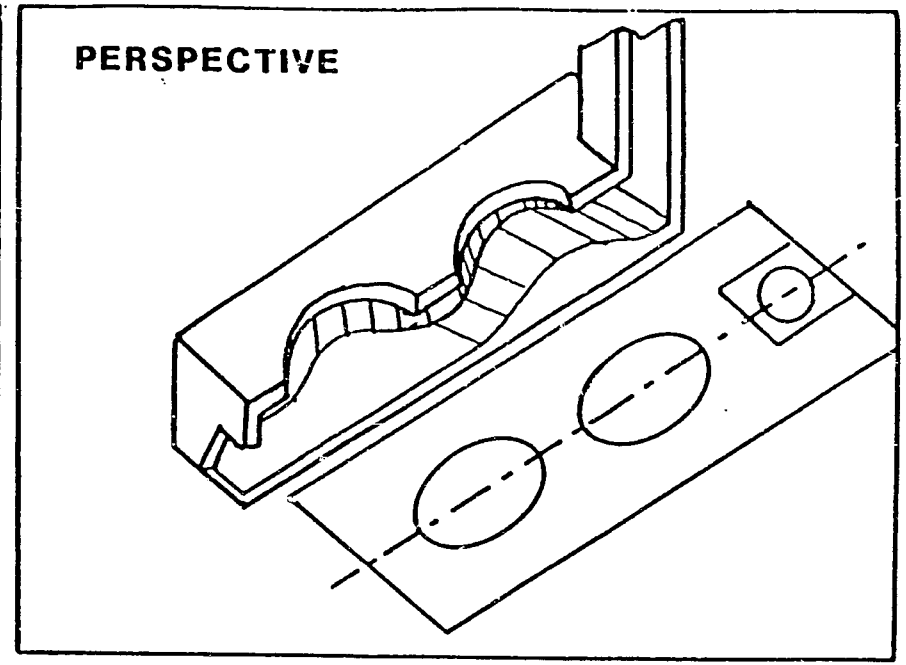
PERSPECTIVE

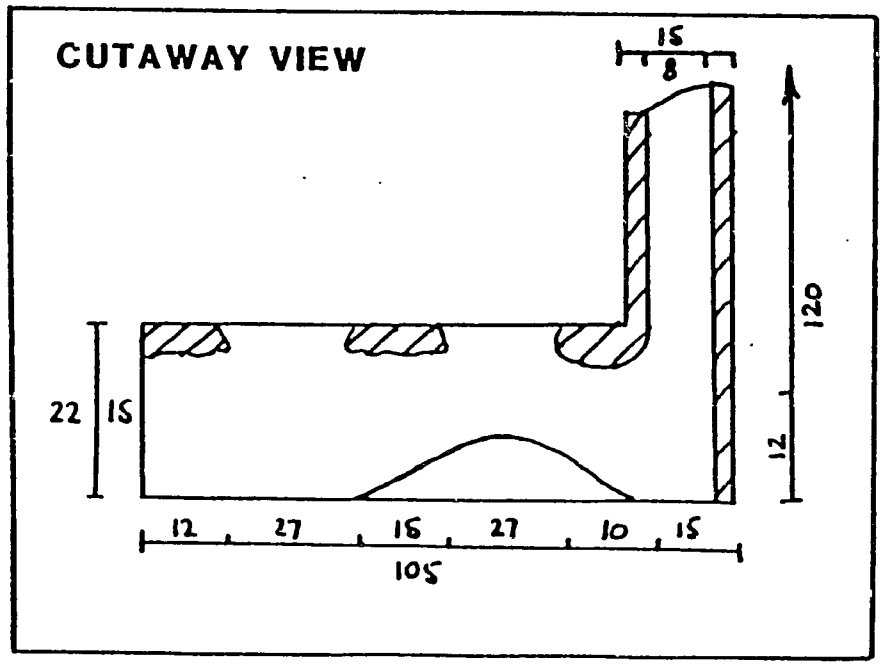
CUTAWAY VIEW
15
8
120
22
15
12
12
27
16
27
10
15
105

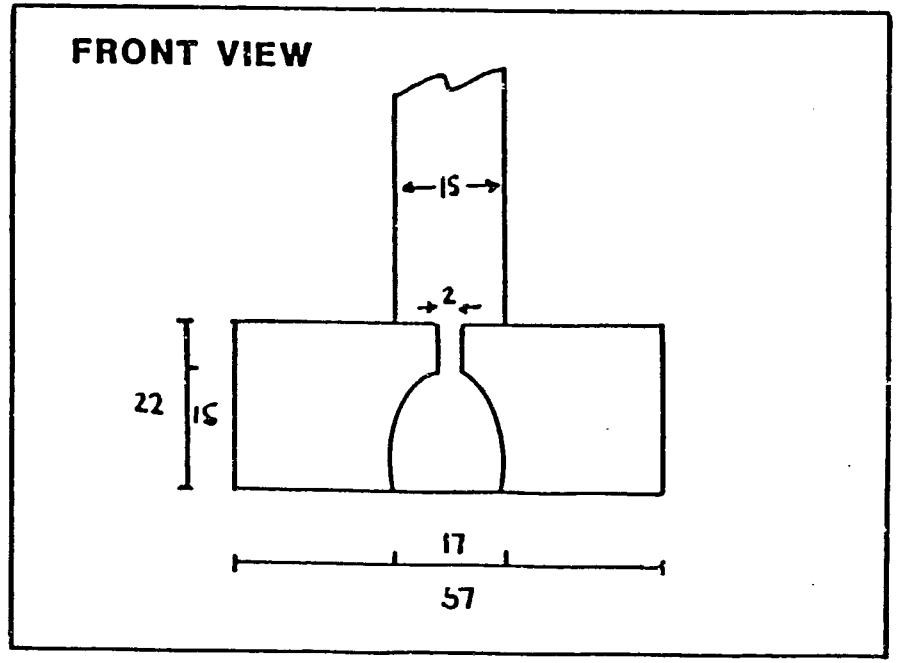
FRONT VIEW
15
2
22
15
17
57

4

Annotated Bibliography

PHOTOVOLTAICS BIBLIOGRAPHY

Photovoltaic Energy Systems, Mathew Buresch, McGraw-Hill Book Co., New York, NY, 1983

This general reference gives both theory and applications for photovoltaics. Addressing system design as well as trouble-shooting, this reference supplies the engineer/technician with most of the information needed for successful design, installation and operation of PV systems. As in all general references noted here, water pumping is only mentioned peripherally.

Practial Photovoltaics, R. J. Komp, AATEC Publications, Ann Arbor, MI, 1983

A general reference which addresses overall system design and component sizing, as well as the step-by-step process of photovoltaic panel assembly. This would be quite useful in making decisions as to the feasibility of local panel assembly versus purchase, even though cell manufacture is not being considered.

The Solar Electric Home, Joel Davidson and R. J. Komp, AATEC Publications, Ann Arbor, MI, 1983

A good practical reference to PV system installation, operation and trouble shooting. This book goes into considerable detail on all system components and has a good general purpose bibliography.

Small-Scale Solar Powered Pumping Systems, Main Report, Sir W. Halcrow et al, UNDP Project GLO/80/003, June 1983.

The report is a technical performance and cost comparison of a number of PV water pumping systems which were available in 1982. Although the only current reference for this field, the technology has improved considerably since these experiments were undertaken. The number of PV pumping systems on the market has nearly doubled since this report became available. Manufacturers should be consulted concerning the most recent developments in this rapidly changing field.

ARCO Solar Photovoltaics Training Manuals, Volumes 1, 2 and 3, ARCO Solar, Chatsworth, CA.

Probably the most extensive coverage currently available of all aspects of PV system design, installation, operation and maintenance. Available through training seminars sponsored by the manufacturer, ARCO Solar.

WIND ENERGY CONVERSION SYSTEMS (WECS) BIBLIOGRAPHY

Introduction to Wind Energy, 2nd edition, E. H. Lysen, Steering Committee for Wind Energy in Developing Countries (SWD), P. O. Box 85, 3800 AB Amersfoort, The Netherlands, May 1983.

A technical, undergraduate-level presentation of the physical principles involved in the design and testing of WECS. Analysis of wind data, rotor and other component design, economics and siting are covered in detail. End-uses are addressed in chapters on pumping systems and electrical generation.

The Wind Power Book, J. Park, Cheshire Books, Palo Alto, CA, 1981.

A less technical presentation of all the principles mentioned above. It includes extensive wind data for many sites around the United States. Accessible to the layperson and very informative.

Wind Machines, F. R. Eldridge, 2nd Edition, Van Nostrand Rheinhold Company, New York, NY, 1980.

An excellent resource for the engineer in the design of WECS. It gives a detailed look at large-scale systems which are currently being experimented with in both Europe and the U. S.

More Other Homes and Garbage, (see Active Solar Thermal bibliography).

COOKSTOVES BIBLIOGRAPHY

Over the past five years, many reports and guides on the subjects of woodstove design, construction and dissemination have been published. The publications included here provide guidance on a wide range of topics, but were selected particularly for their discussion of technical performance assessment.

Cookstove Handbook, Tata Energy Research Institute Documentation Centre, Bombay House, 24 Homi Mody Street, Bombay, India.

This UNESCO-sponsored handbook covers a range of cookstove topics, including: 1) evolution of cookstoves, 2) cookstove design considerations, 3) traditionally used and improved designs of cookstoves, and 4) experiments on cookstoves. It contains descriptions of a large number of wood- and charcoal-burning, and metal, earthen and ceramic stoves. The technical discussion on measuring stove performance is clearly written and helpful to the generalist seeking a better understanding of assessment techniques.

Designing a Test Procedure for Domestic Wood-Burning Stoves, Stephen Joseph and Yvonne Shanahan, ITDG Stoves Project, Interim Report No. 1, Intermediate Technology Development Group, 9 King Street, London WC2E 8HN, England. November 1980.

This publication provides a detailed testing procedure which takes into consideration not only technical combustion but other issues--such as cultural appropriateness--as well.

Helping People in Poor Countries Develop Fuel-Saving Cookstoves, produced by Aprovecho Institute and published by the German Appropriate Technology Exchange (GATE) at Deutsche Gesellschaft fur Technische Zusammenarbeit (GTZ), GmbH, Postfach 5180, D-6236 Eschborn 1, Federal Republic of Germany.

This book emphasizes an overall problem-solving approach to cookstove development. Although technical issues in cookstove development are covered (in Part Two), the first part of the book focuses on extension and information methods as they apply to rural and urban users of cookstoves. The references at the end will be helpful to those seeking more information on the development and assessment of cookstoves.

Modern Stoves for All, Waclaw Micuta, Bellerive Foundation, Case Postale 6, 1211 Geneva 3, Switzerland.

This publication, sponsored by the Bellerive Foundation, has three chapters: 1) Basic Principles (of modern metal and ceramic stoves), 2) Cooking Pots and Alternative Fuels, and 3) Description and Construction of Stove Models. The final chapter includes a thorough discussion of testing.

ACTIVE SOLAR THERMAL SYSTEMS BIBLIOGRAPHY

Solar Engineering of Thermal Processes, J. A. Duffie and W. A. Beckman, John Wiley and Sons, New York, NY, 1980.

The acknowledged graduate-level reference for engineers in the active solar thermal field, this book gives detailed development of the generally accepted performance factors and principles for the design of solar collectors and systems for residential, commercial and industrial applications. Life-cycle costing and solar system economics are covered in detail. Extensive climatic data in appendix.

Solar Thermal Engineering, P. J. Lunde, John Wiley and Sons, New York, NY, 1980.

An excellent undergraduate-level treatment of the principles and applications of solar thermal systems, it gives detailed examples of building heat loss calculations, as well as active solar heating component choice and system design and economic evaluation.

More Other Homes and Garbage, J. Leckie et al, Sierra Club Books, San Francisco, CA, 1981.

A widely inclusive technical presentation of a number of alternative technologies, including both active and passive solar design. While containing essential technical material for the design of systems, this reference is nonetheless readily accessible to the layperson with some scientific background.

Monitoring Solar Heating Systems, R. Ferraro, ed., Pergamon Press, Oxford, England, 1983.

A practical guide to the comparative testing procedures required for evaluating both active and passive solar heating systems, it gives detailed instrumentation procedures and necessary calculations. It contains an extensive appendix detailing measuring instruments and their manufacturers.

PASSIVE SOLAR DESIGN BIBLIOGRAPHY

Tropical Architecture in the Dry and Humid Zones, 2nd edition, Maxwell Fry and Jane Drew, Krieger Publishing Co., Malabar, FL, 1982.

This book addresses residential, commercial and industrial architecture which are closely climate coupled. Examples are taken extensively from developing countries, showing how the principles of traditional architecture have evolved, and incorporates recent technology into the design process to reduce energy consumption and raise interior comfort levels.

The Passive Solar Energy Book, Edward Mazria, Rodale Press, Emmaus, PA, 1979.

A good, introductory-level presentation of the basic principles of passive design and application. The material is accessible to the layperson. The well-illustrated text gives simple calculations, design and sizing rules-of-thumb, and numerous graphical design aids. Most of the reference material is specifically for the United States.

Passive Solar Design Handbook, Volume 3 and Supplement, J. Balcomb et al, American Solar Energy Society, Boulder, CO, 1983.

The acknowledged reference in the field. A compendium of material based on both building tests and extensive computer simulations, the text gives both design procedures and parameters necessary to predict building performance. The material is largely restricted to North American locations, but can be extrapolated to other climates if local weather data are known.

Passive Cooling Handbook, prepared for the Passive Cooling Workshop, Amherst, MA, October 1980. (Sponsored by the U. S. Department of Energy, Lawrence Berkeley Laboratory, and the Florida Solar Energy Center.)

Conference proceedings covering passive and hybrid (active/passive) cooling strategies for buildings, both theory and practice of this nascent technology.

Level B Monitoring Manual for Performance Evaluation of Passive Solar Homes, B. Hamilton and R. Alward, Memphremagog Community Technology Group, Mansonville, Quebec, Canada, 1983.

A detailed, practical manual for monitoring passive solar buildings. Written with residental buildings in mind, it contains principles and procedures easily extrapolated to other types of buildings. Theoretical performance factors and

instrumentation procedures for low-cost (US$5k), microprocessor-based datalogging are covered exhaustively.

Man, Climate and Architecture, B. Givoni, Van Nostrand Reinhold, New York, NY, 1976.

Gives a broad presentation of climatic elements, thermophysical properties of building materials, the impact of solar radiation on building design, ventilation problems, and the integration of all of these into design principles and details for different climates. This reference addresses building design and interior comfort levels from the perspective of minimizing energy use for both heating and cooling purposes.