PN-AAQ-104
ISN-30791

FEASIBILITY STUDY FOR CINNAMON PROCESSING in the SEYCHELLES

Section One: Technical Aspects
Section Two: Labor Markets and Employment

A Report to the
U.S. Agency for International Development
Nairobi, Kenya

by

Dr. Brian Lawrence

for the
Postharvest Institute for Perishables
University of Idaho
Moscow, Idaho 83843
U.S.A.

and

Dr. Michael Farbman
Chief, Employment and Small Enterprise Division
Bureau for Science and Technology
United States Agency for International Development
Washington, D.C. 20523

January, 1984

TABLE OF CONTENTS

SECTION ONE:

TECHNICAL ASPECTS

by

Dr. Brian Lawrence

PAGE

Executive Summary.....1

Part I. CINNAMON

1.1 Introduction.....2
1.2 Cinnamon in Sri Lanka.....5
1.3 Cinnamon in India.....7
1.4 Cinnamon in Madagascar.....7
1.5 Cinnamon in Comoros.....8
1.6 Cinnmaon in Seychelles.....9
1.6.1 Background.....9
1.6.2 Present Situation.....13
1.6.2.1 Economics of Bark Production.....15
1.6.2.2 Shipment of Cinnamon.....18
1.6.2.3 Additional Information.....18
1.6.3 Census of Cinnamon.....20
1.6.3.1 Bark and Oil Reserve Estimates.....22
1.6.3.2 Distillation Logistics.....22
1.7 Cinnamon - Cassia Production Elsewhere.....23
1.8 Cinnamon Grades.....24
1.9 Cinnamon Products.....24
1.9.1 Ground Cinnamon.....25
1.9.2 Cinnamon Bark Oil.....25
1.9.3 Cinnamon Oleoresin.....25
1.9.4 Cinnamon Leaves.....26
1.9.5 Cinnamon Leaf Oil.....26
1.9.5.1 Potential.....29
1.9.5.2 Distillation.....29
1.9.5.3 Chemistry.....29
1.9.5.4 Yield.....36
1.9.5.5 Spent Cinnamon Leaves.....36
1.9.5.6 Economics.....36
1.10 Cinnamon Specification.....38
1.11 Cinnamon Prices.....38
1.11.1 Cinnamon Bark.....38
1.11.2 Cinnamon Leaf Oil.....38

SECTION ONE
TABLE OF CONTENTS
Continued

PAGE

Part II. CINNAMON MARKET

2.1 Introduction....39
2.2 North America and Mexico....39
2.3 West European Countries....40
2.4 East European Countries....41
2.5 Asian Countries....41
2.6 Middle Eastern Countries....42
2.7 South American Countries....43
2.8 Other Countries....43
2.9 Estimated World Market for Cinnamon in 1990....44

Part III. GENERAL OBSERVATIONS AND RECOMMENDATIONS

3.1 Re-establishment of an International Market for Seychelles Cinnamon....45
3.2 Cinnamon Oils....48
3.2.1 Ebullition of Cinnamon Leaf Oil....49
3.2.2 Clarification of Cinnamon Leaf Oil....49
3.2.3 Water Removal from Cinnamon Leaf Oil....50
3.3 General Distillation Discussion....50
3.4 Traditional Still....51
3.5 The French Still....53
3.6 Cinnamon Harvest....57
3.7 Final Comment....58

APPENDIX 1 Bibliography....59
APPENDIX 2 Persons in Seychelles with whom discussions were held....60

SECTION ONE
TABLE OF CONTENTS
Continued

PAGE

TABLES

1 The Accepted Botanical Origins of the Cinnamons of Commerce.....3
2 Major Chemical Components of Various Organs of Commercially Important Cinnamomum Species.....4
3 Export of Cinnamon Bark from Sri Lanka.....6
4 Export of Cinnamon Bark from Madagascar.....8
5 Cinnamon Export from Comoros.....9
6 Export of Cinnamon Bark from Seychelles.....11
7 Export of Cinnamon Leaf Oil from Seychelles.....12
8 Economics of Cinnamon Bark Production.....16
9 Cinnamon Census in Seychelles.....20
10 Calculated Possible Distribution of Cinnamon in Seychelles.....21
11 Theoretical Distribution of Cinnamon in Relation to Land Mass...21
12 Estimated Cinnamon Bark and Oil Reserves in Seychelles.....22
13 Exports of Cinnamon-Cassia from 3 Main Producing Countries.....23
14 A Comparison of the Export of Cinnamon Leaf Oil Between Sri Lanka and Seychelles.....27
15 Cinnamon Leaf Oil Market (Sri Lankan Oil).....27
16 Cinnamon Importations by Species into the U.S., Canada and Mexico.....39
17 Cinnamon Importation Estimates in Western Europe.....40
18 Cinnamon Importation Estimates in Eastern Europe.....41
19 Cinnamon Importation Estimates in the Middle East.....42
20 Cinnamon Importation in Australia and New Zealand.....43
21 Estimated World Market for Cinnamon by 1990.....44

FIGURES

1 Traditional Still (Triple).....30
2 Condenser.....31
3 Separator.....32
4 Traditional Cinnamon Leaf Oil Still.....33
5 Diagramatic Representation of the Field Still "Cisirill Manakoka" for Distillation of Essential Oils.....34
6 Plan (Top View of Condenser).....35
7 Separator A (Problems).....54
8 Separator B.....55

TABLE OF CONTENTS

SECTION TWO:
Labor Markets and Employment
by
Dr. Michael Farbman

PAGE

I. Background and Introduction.....1

II. Labor and Employment in the Seychelles.....2

III. Work and Wages in the Cinnamon Industry.....13

IV. Conclusions.....19

TABLES

I. Foreign Exchange Contributions of Export Sectors, 1973-1982.....4

II. Formal Employment by Sector and Industry, 1978-1982.....5

III. Formal Agricultural Employment, 1977-1982.....6

IV. Total Employment and Agricultural Employment,
Private vs Public/Parastatal Sectors, 1973-1982.....7

V. Average Monthly Earnings (Rupees) of Formal Employees
by Sector and Industry, 1978-1982.....9

VI. Minimum Wages Index in Agriculture (Private Sector) -
Hourly Rates: 1976 = 100.....12

VII. Cinnamon Bark Producer Prices, Selected Points, 1966-1982.....18

Persons Contacted.....23

EXECUTIVE SUMMARY

The U.S. Agency for International Development was requested by the Seychelles Ministry of National Development to provide assistance in obtaining information on the feasibility of processing cinnamon as an edible, pharmaceutical or cosmetic oil. A team of three people responded to Cable Victoria 01180 which defined the scope of work. The team members were Dr. Brian Lawrence and Dr. Elmo Davis from the Postharvest Institute for Perishables, and Dr. Michael Farbman, from S&T/RD.

The team spent the period of November 10 to 24, 1983 in Seychelles for the purpose of examining the technical feasibility of re-establishing cinnamon leaf distillation in that country. Since cinnamon bark and cinnamon leaf oil exports used to produce a large amount of foreign exchange earnings, the reduction in production has had a serious effect on the agricultural economy as a whole. Production of cinnamon leaf oil between 1950 and 1965 in Seychelles was around 75 metric tonnes which was about 70% of the total world production.

Cinnamon leaves are obtained as a by-product of cinnamon bark production, so cinnamon leaf oil must be considered as a true by-product commodity. Consequently, it was quickly realized that to obtain an accurate picture of the technical feasibility of cinnamon leaf oil distillation, it was important to examine the industry as a whole.

Information learned during the time frame of the team's stay in the Seychelles led to the conclusion that:

1) the re-introduction of Seychelles cinnamon leaf oil into the international market would be an unsound investment because of price restrictions and market constraints,
2) Seychelles would have to be re-established as a reliable producer of cinnamon bark before an oil processing industry could be considered, and
3) if the decision is made to re-enter the world market with Seychelles cinnamon leaf oil, it would have to be heavily subsidized.

SEYCHELLES CINNAMON FEASIBILITY STUDY

SECTION ONE

Technical Aspects

by

Dr. Brian Lawrence

for the
Postharvest Institute for Perishables
University of Idaho
Moscow, Idaho 83843
U.S.A.

Prepared for

REDSO/Nairobi, Kenya
and
U.S. Embassy/Victoria, Seychelles

January 1984

PART I. CINNAMON

1.1 Introduction

Cinnamon is the dried inner bark of a number of species of the genus Cinnamomum (Lauraceae); essential oil-bearing tropical and sub-tropical evergreen trees. The members of the Cinnamomum genus can be found growing at various altitudes from highland slopes (ca 2000 m) to the lowlands in a number of different soil types. Cinnamon is undoubtedly one of the oldest spices known. For example, Emperor Shen Nung recorded tasting cinnamon (presently Cinnamomum cassia) as long ago as 3000 B.C. Since that first record, there were numerous references to cinnamon outside of China after the 5th Century B.C.

Before discussing the details of cinnamon, it is important to review the various commercial names for cinnamon and cassia. The latter is also known as cinnamon or occasionally cassia-cinnamon. A summary of the commercial names and their botanical origins appears in Table 1. This table can be summarized as follows:

1. Cinnamomum verum is commercially exploited in Sri Lanka, Seychelles, Madagascar, Comoros, and India.
2. Cinnamomum cassia is commercially exploited only in China (and to a very limited extent in Taiwan).
3. Cinnamomum burmanni is commercially exploited only in Indonesia.
4. Cinnamomum loureirii is commercially exploited only in Vietnam.

TABLE 1.

The Accepted Botanical Origins of the Cinnamons of Commerce

Botanical Name	Vernacular Names
1. *Cinnamomum verum* Presl. (syn. *C. zeylanicum* Nees)	Ceylon cinnamon, Sri Lanka cinnamon, True cinnamon, Seychelles cinnamon, Madagascar cinnamon, Comoros cinnamon, Indian cinnamon
2. *Cinnamomum cassia* Blume	Chinese cassia, Cassia Lignea, Canton cassia, Kwangtung cassia, Kwangsi cassia, Yunnan cassia, Honan cassia, China Junk cassia, Taiwan cinnamon, cassia-cinnamon, Tunghing cassia, Sikiang cassia
3. *Cinnamomum burmanni* Blume	Cassia Vera, Indonesian cassia,* Padang cassia,* Batavia cassia,* Korintji cassia,* Java cassia,* Sumatra cassia,* Macassar cassia,* Timor cassia*
4. *Cinnamomum loureirii* Nees	Saigon cassia,* Vietnam cassia,* Danang cassia,* Annam cassia,* Tonkin cassia,* Haiphong cassia*

*In each case, the word 'cinnamon' can be substituted for the word 'cassia'.

The Cinnamomum species are essential oil bearing and in all instances the bark and leaves are aromatic. However, the oils are not necessarily chemically identical nor exploited. A summary of chemical composition of the various commercially important cinnamons is shown in Table 2.

TABLE 2.

Major Chemical Components of Various Organs of Commercially Important Cinnamomum Species

Botanical Origin	Part of Plant Examined		
	Leaf	Bark	Root
1. C. verum	eugenol 70-90% cinnamaldehyde 2-8%	cinnamaldehyde 65-75% eugenol 6-12%	camphor 40-70% 1,8-cineole 8-12%
2. C. cassia	cinnamaldehyde ca 85%	cinnamaldehyde ca 85%	unknown
3. C. burmanni	cinnamaldehyde (major) eugenol	cinnamaldehyde ca 85%	unknown
4. C. loureirii	cinnamaldehyde (major) linalool	cinnamaldehyde ca 85%	unknown

The known oils of commerce from the Cinnamomum species under discussion are:

1. cinnamon leaf oil and cinnamon bark oil from C. verum (it should be noted that it is economically unfeasible to use the root as a source of camphor),
2. cassia oil from the bark, twigs, and leaves of C. cassia,
3. work is currently underway to exploit the leaves and twigs of C. burmanni for oil production in Indonesia.

Detailed chemical analyses of cinnamon leaf oil, bark oil and cassia oil have been completed by various scientists over the past ten years.

1.2 Cinnamon in Sri Lanka

Cinnamomum verum is cultivated throughout the southwest of the island of Sri Lanka. At one time, cinnamon was a major export of Sri Lanka (then Ceylon), but tooay it occupies only a minor place in the island's trade. Currently, cinnamon is grown in Ambalangoda, Meegamuwa, Negombo and Homagama districts, however, the bulk of the cinnamon comes from the Ambalangoda area around Galle and Matara.

It is estimated that there are 14,000 - 16,000 hectares of cinnamon under cultivation. In addition, there are probably another 500-800 hectares of wild cinnamon spread through the areas of Ratnapura and Badulla.

Most of the plantations of cinnamon are small (75% are less than 2 hectares), however, there are a few which exceed 20 hectares (Samarawira, 1964). In addition, many of the plantations are very old with the rootstocks reputed to have been planted more than 100 years ago.

Throughout Sri Lanka, cinnamon is grown as a coppiced bush. About 2-3 months prior to harvesting, any unproductive irregular stems are removed to facilitate harvesting (Anon. 1968). This pruning, which is known as "nuhuru-pahinawa" is usually done coincidentally with a pre-harvest weeding.

The main harvesting seasons in Sri Lanka commence around April-May and September-October depending upon the monsoon rains. At the commencement of the first rains, the cinnamon flushes and continues until the rains have stopped. During flushing, the new leaves assume a red colouration which turns to the characteristic dark green as the sap begins to circulate between the cambium layers and the bark. At this time, the cinnamon shoots are ready for harvest.

In Sri Lanka, the plant is ready for its first harvest 2 1/2 - 3 years after seedling transplanting. The actual harvesting consists of cutting the upright shoots to within 10-15 cm of the ground level (Anon. 1968), so that the cut is inclined towards the inside of the clump. The base of the clump is then covered with soil to promote stool formation from which the following year's shoots can develop. The shoots, which are harvested, are usually 1-2 m in length and 1.2 to 2 cm in diameter. The ideal time to harvest them is when they become woody and begin to harden. Once the shoots are harvested, the green tops and leaf-bearing branches are removed. These trimmed shoots are then bundled and taken to the wadi (peeling shed) where they are debarked. This process of quill making, peeling or debarking is a skilled process and is done almost wholly by a community known as Halegama.

TABLE 3.

Export of Cinnamon Bark From Sri Lanka

Year	Quills*	Chips*	Total*
1951-1955			2621 (Annual average)
1956	2292	255	
1957	2038	210	
1958	2317	269	2581
1959	2562	292	(Annual average)
1960	2452	260	
1961	2741	353	
1962	2560	401	
1963	2425	438	2914
1964	2580	313	(Annual average)
1965	2410	378	
1966	2397	364	2761
1967	2687	404	3091
1968	3146	845	3991
1969	3354	1097	4451
1970	3565	648	4213
1971	3690	779	4469
1972	4150	1092	5242
1973	4432	2081	6513

*Metric tonnes

Wijesekera, et al, 1976

1.3 Cinnamon in India

Cinnamon can be found growing wild in the evergreen forests of the Western Ghats, Annamalais, Carnatic, Shevaroy and Kallar hills of southern India. It is cultivated mostly in Tannur, Wynad and Nilambar on the small scale, whereas, in Anjarkandy it is cultivated on a much larger scale. It is reputed that the old "Brown's cinnamon estate" is the largest estate in the world which is devoted solely to cinnamon. Although the climatic and soil conditions of Kerala, Karnataka and parts of Tamil Nadu are conducive to successful cinnamon growth, the total area under cultivation is very limited. A few years ago (Kannan and Balakrishnan, 1967) it was reported that a large number of cinnamon seedlings were distributed to individuals througout Kerala to promote the development of cinnamon as a cottage industry. Although in recent years there has been an increase in bark production in Kerala, the increase has not been as large as it should have been because of the poor dissemination of information on cinnamon culture, harvesting and quilling practices.

The first harvest takes place during the fourth or fifth year after seedling transplantation (Mahboob, 1961). Under optimum condition, 4-7 shoots can be harvested from one root stock every two years. A common belief of the Indian cinnamon growers is that shoots which are directly exposed to the sun, yield a bark which is spicier than that from shoots raised in the shade. Like Sri Lanka, cinnamon harvesting takes place after the northeast monsoon and also after the southwest monsoon for approximately 80-90 days on each occasion.

The culture, harvesting, and quilling of Indian cinnamon on the large estates is done by Sinhalese descendants who were brought into India from Sri Lanka because of their knowledge and skill in cinnamon cutting and peeling.

It is estimated that the current cinnamon production is around 500 metric tonnes.

1.4 Cinnamon in Madagascar

Cinnamon was first introduced into Madagascar over 150 years ago where it was first cultivated on the east coast in the vicinity of Fénérive and Tamatave. This area was selected because cinnamon was found to grow well in the hot, humid climate of the lower coastal regions. Cinnamon has not been cultivated for a long time in Madagascar although it has spread throughout the

humid eastern side of the island through propagation by birds. At one time, crude quills were produced from trees of 4-6 m in height, whereas now a rough, unscraped bark is the general item of commerce. It is produced from trees of varying height and ages.

In the mid 1940's cinnamon production was miniscule, averaging about 50 metric tonnes. In the late 1960's and early 1970's, production was increased as shown in Table 4.

TABLE 4.

Export of Cinnamon Bark from Madagascar

Year	Quantity (tonnes)
1968	443
1969	2036
1970	631
1971	692

Wijesekera, et al, 1976.

It is estimated that the current annual production is approximately 500 metric tonnes.

1.5 Cinnamon in Comoro Islands

Like Madagascar, cinnamon was introduced into the Comoros about 150 years ago. Since then, it has spread throughout Mayotte where the centre of production is around Combani. It can also be found to a limited extent in Grande Comoro. Cinnamon has been spread by birds in Mayotte, as it has in Madagascar and Seychelles.

Most of the cinnamon produced in the Comoros is rough, unscraped bark. Cinnamon exported from the Comoros is summarized in Table 5.

As can be seen, the maximum export of cinnamon from the Comoros is approximately 300 metric tonnes.

TABLE 5

Cinnamon Export from Comoros

Year*	Metric tonnes
1968	34
1969	68
1970	119
1971	164
1972	299
1973	209
1974	105
1975	9.5
1976	1.5
1977	34

About 95% of the cinnamon comes from Mayotte while the remaining 5% comes from Grande Comoro.

*Recent export figures are unavailable.

1.6 Cinnamon in the Seychelles

6.1 Background

Cinnamon was introduced into the Seychelles in 1772 by order of Pierre Poivre, the intendant of Mauritius. By the late nineteenth century it had completely dominated the secondary forest vegetation, and even volunteered in coconut groves. The reason for this great dispersal was because the fruits were a popular source of food for the indigenous fruit pigeon (Dutch pigeon or Hollandaise) *Alectroenas pulcherrima* and more recently by the Indian Mynah bird (*Acridotheres tristis*). Hence the spread of cinnamon throughout Mahé and later throughout Silhouette, Praslin and La Digue can be definitely traced to the birds.

Cinnamon bark was first exported on a very limited scale in the early nineteenth century. In addition, a small distillery was in existence at Cascade (Mahé) before 1900. For the most part, however, the trees were left alone to multiply and spread in 1902. The newly established Department of Agriculture found that the local cinnamon was comparable with the best Ceylon cinnamon and, as a result, intensive exploitation began.

By 1908, bark stripping was said to have reached a peak. At this time most of the large trees were either felled or bark was stripped from the standing trees. The latter practices killed the trees. By 1915, the number of trees available for debarking had diminished and this led to a shift to distillation of leaf oil, mostly from young trees considered too young to debark. The export of cinnamon bark and cinnamon leaf oil continued although the years 1921-1945 tended to be lean ones because of ruthless harvesting of trees for bark in combination with harvest of young trees for leaves.

Between 1920 and 1940, a sizeable portion of cinnamon in the lowlands was replaced with coconuts because the rising labour costs had made the production of quills economically unattractive.

During the early 1940's, however, this trend was indirectly reversed. At that time there was a great scarcity of vanilla around the world and many countries, including the Seychelles, reacted quickly by establishing plantations on Praslin.

Vanilla is a vine crop and an inexpensive support tree had to be found. On advice of the Department of Agriculture, cinnamon was chosen as one of the support trees because of its availability and low cost. The choice of cinnamon as one of the support trees proved to be beneficial because when a number of years later vanilla was devastated by a flood which in turn spread a disease known as anthracnose, the cinnamon support trees survived.

During this time, the production of scraped bark and rough bark, instead of quills was started. As a result of the decreased labour cost to produce scraped and rough bark, cinnamon bark exports began to increase again.

By the mid 1950's cinnamon had spread all over the islands of Mahé, Silhouette, Praslin and La Digue. Mahé, like the other granitic islands, has a narrow coastal strip and a central range of hills rising to a height of about 900 metres. Because of the hilly and rocky terrain and the lack of primary or secondary roads, much of the cinnamon was almost inaccessible by motor vehicles. In the past, the use of cables to assist the croppers in bringing their bark and leaves down to a collection site was popular. Unfortunately, the cables were removed and, as a result, many of the trees in remote areas have been allowed to grow large.

When a tree was cut down ready for de-barking, the women and children hand picked leaves from the branches and twigs. The bark was then removed from the main trunk and larger branches by pounding with a hard object such as a steel hammer or a suitably sized piece of cinnamon wood. The fresh (green) bark and the leaves were packed into separate gunny bags to be transported (the same day) down to a collection site or a distillery, whichever was closer. The leaves were usually distilled within 24 hours of picking. Leaf separation not only took the workers considerable time, but it was also very abrasive and many of the de-leafers suffered with blistered and cut hands. The cinnamon croppers were paid for both fresh leaves and green cinnamon bark, although they received more money for the bark. When a distillery was fairly close, it was mandatory that the croppers bring both bark and leaves. It was a common practice that because of the larger quantity of leaves/bark ratio on smaller trees, many of the croppers obtained their leaf quota by felling small trees as well as large ones.

By the mid 1960's, approximately 1500 tonnes of bark and 50 tonnes of leaf oil were exported annually.

A summary of bark exports from the Seychelles is shown in Table 6. It is notable that in 1977 there were 84 households, 66 small holdings and 14 large farms producing cinnamon bark. They accounted for 68, 72, and 348 metric tonnes, respectively.

TABLE 6.

Export of Cinnamon Bark from Seychelles

Year	Quantity (Tonnes)
1951-1955	350 (Annual average)
1956-1960	874 (Annual average)
1961-1965	1260 (Annual average)
1966	1543
1967	2484
1968	5073 (3039)[1]
1969	1444
1970	1335
1971	1302
1972	2031
1973	1676
1974	1500
1975	1116
1976	1204
1977	488
1982	419

[1] Wijesekera, et al, 1975.
Purseglove et al, 1981.

A summary of the export of cinnamon leaf oil from the Seychelles can be seen in Table 7.

TABLE 7.

Export of Cinnamon Leaf Oil from Seychelles

Year	Quantity (Tonnes)
1951-1955	90.3 (Annual average)
1956-1960	78.6 (Annual average)
1961-1965	74.7 (Annual average)
1966	48.8
1967	35.6
1968	20.8
1969	11.9
1970	17.3
1971	12.0
1972	6.8
1973	2.1
1974	0.6
1975	0.4
1976	1.1
1982	0

1.6.2 Present Situation[1/]

After the Seychelles gained independence in 1976, there was a lull in the production of both leaf oil and bark. By 1982, only 419 tonnes of bark were exported while no cinnamon leaf oil was even produced. It is worthwhile examining the reasons for the near demise of a once-important export industry.

The opening of an international airport on Mahé in 1971 changed the whole economy of the Seychelles. Before that date, cinnamon and copra had been the major exports generating foreign exchange. With the airport in place, the development of a tourist industry and the influx of foreign investment capital began to change the economy of this island community. Tourists require hotels, restaurants, and bars so the early 70's saw a development of a local construction industry. This industry needed a large amount of unskilled and semi-skilled labour, so the men who traditionally worked in the copra and cinnamon harvests were lured away from the agricultural sector by higher wages and what appeared to be easier work. Some women also moved from agriculture into construction while a lesser number moved into the hotel business where they became maids and kitchen help. Most of the women who moved were under the age of 30. The traditional "femmes cannelles" stayed in the agricultural fields, mostly by their own choice.

At this time, all of the export and marketing of copra and cinnamon were in the hands of the independent traders, such as Akbar Champsi, Chetty Bros., Chakka Bros. and Temooljee & Co. These traders possessed telex equipment and were constantly offering cinnamon for sale in various lot sizes to the London and New York markets. As Seychelles cinnamon was a fairly clean product, very rarely was a lot rejected even though all of the sales to the United States were made without guarantees to pass FDA specifications. In addition, the traders were very aware of the international markets with respect to usage trends, availability and prices of competitive products. Consequently, they were very alert to the development of the market opportunities. This situation continued after independence in 1976, although there was a decrease in labour availablility for cinnamon cropping.

1/ See Section Two: Labor Markets and Employment, by Michael Farbman.

At one time, during the mid 1960's cinnamon cropper piece workers were among the highest paid agricultural workers in the Seychelles. The main reason for this was the high world prices of cinnamon at that time. More recently, the government has established a three-tier wage program:

1.	Subsistence wage	:	Rs 20.00/day
2.	Minimum wage	:	Rs 500.00/month
3.	Mandatory wage	:	Rs 1008.00/month

Cinnamon croppers are paid piece wages (for weight of green bark collected) against the mandatory wage. However, their wages are calculated according to the number of hours actually worked as a proportion of the 45 hours per week needed to obtain the full mandatory wage. A typical cinnamon male worker earns between Rs 600.00 - Rs 680.00 per month. In comparison, shop assistants and hotel workers earn approximately Rs 870.00 per month. The latter is a considerably higher wage than would be earned by cinnamon croppers anywhere else in the world.

In the early part of 1980 a parastatal export company (SEYCOM) was established. The mandate was that SEYCOM (Seychelles National Commodity Co. Ltd.) would be the sole exporter and international marketer for the major agricultural products, namely copra and cinnamon. Soon after establishment, SEYCOM agreed to purchase all of the dry cinnamon bark at a fixed price of Rs 3200 per metric tonne. The price was raised in 1981 to the current one of Rs 3850[1] per metric tonne in 1981. Unfortunately, knowledge of the international cinnamon market is severely lacking at SEYCOM. As a result, for the past three years SEYCOM has been unable to recapture some of the traditional Seychelles cinnamon markets. The only recent sales have been to Pakistan as an "add-on" to cup copra (an important coconut product of Seychelles sold exclusively to Pakistan) because of a comparatively inexpensive shipping charge. It is presumed that Pakistani traders not only bought for local consumption, but bought for resale to third parties. Algeria has also been a recent customer of the Seychelles; however, this resulted from a government to government contact and not through SEYCOM.

---

[1] current exchange rate is Rs 6.84 per $1.00

It was reported (Republic of Seychelles National Development Plan, 1982-1986) that the government planned to establish small cinnamon leaf distillation units in order to obtain oil for export and spent leaves for compost. In addition, more drying facilities for bark drying were going to be built under the management of SADECO, a parastatal agricultural development company.

Subsequent to this report, a new kiln has been built at Sans Souci. The French government, through its equivalent of AID, has supplied a new cinnamon leaf still of about 900 kg charge size. It was installed during October-November, 1983 and the first trials were done during the time of the PIP team's visit to the Mission. At the same time, SADECO was also building three traditional stills based on what was thought to be the best technical experience present in the Seychelles. These traditional stills are being constructed with salvaged equipment from previously existing stills and a lot of maintenance work will be needed before the units can become operational. This is particularly true of the boilers which are being partly rebuilt.

The French still is at Anse aux Pins while the traditional stills are at Anse Royale. Both of these areas are very close to each other and are currently under control of SADECO.

Just prior to the team's leaving the Seychelles, the Mission was informed that within a few days a new parastatal was going to be formed. The sole responsibility for this parastatal was reported to be that of cinnamon bark production, cinnamon leaf oil production and spent cinnamon leaf sales.

1.6.2.1 Economics of cinnamon bark production

As stated above, cinnamon bark is currently purchased by SEYCOM at a price of Rs 3850 per metric tonne. It should be noted here that the establishment of a fixed price for cinnamon bark purchases by SEYCOM was made without any attention to world market prices for competitive cinnamon. Because of this fixed price, it is worthwhile examining the economics of bark production. To obtain this information, discussions were held with representatives of SEYCOM, SADECO and the private sector. A summary of the data obtained can be seen in Table 8.

TABLE 8.

Economics of Cinnamon Bark Production

		SEYCOM	SADECO	OTHER
1.	Cropping Cost	Rs. 0.60/kg	Rs. 0.60/kg	Rs. 0.70/kg
2.	Conversion Rate	2.125:1	3:1	2.25:1
3.	Purchase Price of Cinnamon	500	150	-
4.	Cost of Cinnamon Per Dry Tonne	2338	1950	1575
5.	Additional Labour Costs	250	917	715
6.	Gunny Bags (New and Old)	120	237	310
7.	Transport Fuel Cost	30	200	140
8.	Kiln Fuel Cost		25	25
9.	Depreciation	462	259	130
10.	Miscellaneous Costs		52	55
	TOTAL	3200	3640	2950

1. Cropping cost is the amount of money paid to the cinnamon croppers for delivering 1 kg of green bark to the kiln. The croppers usually work between 7:00 AM and midday, and generally work either in family units or village units. Many of the croppers are women "femmes cannelles". The cropping averages are as follows:

   80 kg (man) good day
   50-60 kg (man) average day
   30-40 kg (man) poor day
   40-45 kg (women)
   15-20 kg (child)

   Friday is pay day so the croppers generally crop less bark than on other days. Monday is the most common day that croppers stay away from work.

2. Conversion rate is the number of kg of green bark needed to produce 1 kg of dry bark. Obviously this depends upon the thickness of the bark. The two extremes in the conversion rate are 2:1 and 3:1. All owners of kilns have a figure between these two which they use to calculate their costs.

3. Purchase price of cinnamon is the fee paid to a land owner for the privilege of being allowed to crop cinnamon. Normally, land owners do not pay themselves a fee for cropping their own land. Parastatals, on the other hand, charge a fee for cropping their own land. Landowners charge a higher fee for someone to crop cinnamon on their land.
4. Cost of cinnamon per dry tonne is the cropping cost and purchase price of the cinnamon multiplied by the conversion rate.
5. Additional labour charges are the costs accrued for loading, unloading and fueling the kiln, and cleaning, grading, and bagging the dry cinnamon. In addition, a 10% social security must be paid on all labour by the employer (the employee has to pay an additional 5%).
6. Gunny bags. It takes 25 gunny bags to pack 1 metric tonne of dry cinnamon, and each tonne requires 25 new bags. In addition, old gunny bags are used to transport green cinnamon bark down from the cropping area.
7. Transport (fuel) costs are made up of cost of transporting the green cinnamon by truck or van. There is an additional cost of transporting the bagged, dry cinnamon to the warehouse on the wharf.
8. Kiln (fuel) cost is the cost of getting wood to fire the kiln.
9. Depreciation is made up of a figure for the depreciation on the kiln and the depreciation of transportation (truck or van).
10. Miscellaneous costs include repairs as well as paper work, telephone charges, etc.

1.6.2.2 Shipment of Cinnamon

The following shipping routes are normally used for commodities from the Seychelles:

1. To Europe via northbound French ships (NCHP Line) from Reunión via Seychelles to Marseilles. One ship approximately every two months. Cost: approximately $250.00 per tonne.
2. To Europe via southbound ships which go to Mauritius, then Reunión where the material is transhipped onto northbound French vessels. Not all French ships call at Victoria, so faster shipment to Europe is impossible by using southbound vessels rather than waiting for the first northbound vessels. Cost: approximately $340.00 per tonne.
3. To North America or South America commodities are shipped on UNICORN Line which is routed to Durban-Comoros-Seychelles-Colombo-Durban. In this case, commodities are transhipped from Durban.
4. To Pakistan either MANTA Line or SUN Line, the normal copra route. Cost: approximately $110 per tonne.

According to private traders, the cost of shipping commodities such as cinnamon to

a) Europe is $285.00/tonne, and
b) U.S.A. is $445.00/tonne.

1.6.2.3 Additional Information

There are a number of facts not noted previously that have been identified as being potentially important:

1. There is absolutely no organized cultivation of cinnamon in Seychelles.
2. Other than the removal of cinnamon seedlings from coconut groves or vegetable and fruit gardens in the low coastal strips, there is no planned removal of cinnamon, i.e. no planned conservation.
3. In areas where cinnamon is being cropped, all trees are felleo and bark is removed on site. There are no anti-erosion measures being taken.

4. Trees are cut down at a rate so that the bark can be removed the same day. It is difficult to remove the bark from a tree that has been felled greater than 24 hours before de-barking.
5. In many areas where cinnamon trees have been felled, a persistent shrub, Prune de France (Chrysobalanus icaco L.), will often take over the canopy. This intrusion causes some of the cinnamon trees not to regenerate or to do so very poorly.
6. Leaf to bark ratios vary with the age of the tree:

Age	Leaf:Bark
3 years	20 : 1
10 years	4 : 1
20 years	2 : 1

7. There are two types of cinnamon found on Mahé; one whitish bark which is harder to remove than the other which is buff coloured. The cinnamon obtained from the nothern part of Mahé is better quality than that obtained from the south.
8. Because of the higher rainfall, the cinnamon trees from the higher elevations grow faster and the bark thickens more quickly.
9. Too many Albizia (Albizia falcataria Durazz.) trees will cause the demise of the cinnamon trees.
10. In the least accessible areas, cinnamon croppers will clear crop so that they do not have to return to the area very quickly.
11. Because of the high cost of wages for agricultural workers it is not economically practical to have pathways cut into the bush to allow easier access to poorly accessible areas, nor can the unwanted shrubs and weeds be removed from areas of high concentration of cinnamon.
12. Green or fresh bark is normally dried in a heated shed (kiln or callifer) to ensure that it assumes an even colour during its loss of moisture. It is possible to sun dry the bark in the coastal area, however, it must be constantly turned and moved under cover so that it does not get re-wetted by either rain or dew.

13. The thickness of the bark determines the loss of weight on drying. For example, thick bark may lose 2.25 times its own weight (2.25 kg green bark yields 1 kg dry bark) while thin bark may lose as much as 3.0 times its own weight.
14. In addition to bark being bought by SEYCOM for Rs 3850 per tonne, the chippings or dust is also purchased by SEYCOM for Rs 900 per tonne.
15. Once SEYCOM agrees to purchase some cinnamon, the bark is transported to a warehouse on the wharf where each bag is examined visually for consistency of bark colour and "snap" sound when the bark is broken. This sound indicates to the experienced ears of the Chief Control Officer's Quality Assurance Program workers whether the bark has less than 13% moisture.

1.6.3 Census of Cinnamon in Seychelles

It was estimated by the late 1960's that there were approximately 6000 hectares of cinnamon growing in the wild state on Mahé, Praslin, Silhouette and La Digue. At that time, a census of the trees was taken with the following results shown in Table 9.

TABLE 9.

Cinnamon Census in Seychelles

Island	No. Hectares	Percentage
Mahé	3942	65
Praslin	519	9
Silhouette	1240	21
La Digue	311	5
TOTAL	6012	100

It was estimated in the mid 1970's that the area under cinnamon had increased to 8100 hectares. If it is assumed that because of the lull in the industry there are approximately 10,000 hectares of cinnamon growing in the wild state, it can be estimate that the percentage distribution is either roughly the same as the previous census or that it has followed more closely the land mass distribution.

Using previous percentages shown in Table 9, the data shown in Table 10 can be calculated.

TABLE 10.

Calculated Possible Distribution of Cinnamon in Seychelles

Island	Percentage	No. hectares*
Mahé	65	6,500
Praslin	9	900
Silhouette	21	2,100
La Digue	5	500
TOTAL	100	10,000

*Assuming 10,000 hectares

If the present distribution follows land mass distribution, the date shown in Table 11 would result.

TABLE 11.

Theoretical Distribution of Cinnamon in Relation to Land Mass

Island	Area (hectares)	Percentage	No. hectares*
Mahé	14655.2	69.0	6900
Praslin	4040	19.0	1900
Silhouette	1600	7.5	750
La Digue	960	4.5	450
TOTAL	21,255.2	100.0	10,000

*Assuming 10,000 hectares

If the two estimates are combined, the following range of cinnamon distribution is obtained:

On Mahé there are between 6500 and 6900 ha of cinnamon; on Praslin there are between 900-1900 ha; on Silhouette there are between 750-2100 ha and on La Digue there are between 450 and 500 ha.

1.6.3.1 Bark and Oil Reserve Estimates

It has been estimated that large trees up to 60 cm in trunk diameter yield approximately 112.5 - 135 kg green bark (45 kg dry bark), while small trees yield approximately 11.25 - 13.5 kg green bark (4.5 kg dry bark). It has also been estimated that an average yield of 600 kg of dry bark per hectare can be expected every five years. A further estimate for leaf yield per hectare is 1900 kg (11.4 - 15.2 kg oil).

Using the same 10,000 hectares and the above figures the data shown in Table 12 can be calculated.

TABLE 12.

Estimated Cinnamon Bark and Oil Reserves in Seychelles

Island	Dry Bark (tonnes)	Leaf Oil (tonnes)
Mahé	3900 - 4140	74.1 - 105
Praslin	540 - 1140	10.3 - 17.3
Silhouette	450 - 1260	8.4 - 31.9
La Digue	270 - 300	5.1 - 7.6
TOTAl	1290 - 3000	23.7 - 40.5

1.6.3.2 Distillation Logistics

In the traditional stills, the capacity of each still is 300 kg of leaves. A "triple" still was reported to yield about 8 kg of oil per 8 hours, or 24 kg per day. Assuming operation for 48 weeks per year (5 days per week), a triple still could produce 5.76 tonnes of oil per year or about 5% of the world market. Using traditional stills with the same data, the Seychelles would require 10 traditional triples to produce about 50% of the world market requirements. If on the other hand, the assumed 25% of the cinnamon was cropped, there would be less need for traditional "triples" (3 stills in series). To produce just over 23 metric tonnes of oil, three traditional triples and the French still on Mahé alone, will be needed. This will produce about 20% of the world requirement and use around 25% of the available cinnamon leaves.

1.7 Cinnamon - Cassia Production Elsewhere

It is necessary to understand the total world market with respect to cinnamon and cassia. Therefore, consideration should be given to quantities of cinnamon and cassia produced by the main countries that impact world supply, demand, and price. A summary of the published production figures and trends appears in Table 13.

TABLE 13.

Exports of Cinnamon-Cassia from Three Main Producing Countries (tonnes)

Year	China[1]	Indonesia[2]	Vietnam[3]
1946-1950	8007	1473	610
1951-1955	691	5307	50
1956-1960	4000	6696	813
1961-1965	1219	8600	465
1966	2500	4344	30
1967	1750	5560	36
1968	2000	4458	20
1969	2000	2812	5
1970	1750	2836	56
1971	2500	2875	240
1972	1750	3650	25
1973	1500	4390	284
1974	1250	2740	218
1975		3027	
1976		4548	

[1] *Cinnamomum cassia*
[2] *Cinnamomum burmanni*
[3] *Cinnamomum loureirii*

Purseglove, *et al*, 1981

1.8 Cinnamon Grades

Cinnamon (*Cinnamomum verum*) is available in various grades from Sri Lanka - the "Fine" or "Continental" grades, the "Mexican" grades and the Hamburg or commonly available grades. Within these grades of quills are a series of subgrades:

Continental		Mexican
c - 00000 special	increasing	M - 00000
c - 0000	thickness	M - 000
c - 000	↓	Hamburg
c - 00		No. 1
c - 0		No. 2
		No. 3

In addition to quills of various thickness and uniformity of colour, broken quills are sold as "quillings" and inner bark from twigs and twisted shoots are sold as "featherings".

Finally, a product known as "chips" is also sold. Chips are considered to be the lowest grade of cinnamon produced in Sri Lanka. They are prepared by beating off the outer bark and inner bark with a blunt instrument. Another description for chips would be "rough unscraped bark".

In Seychelles, Madagascar and Comoros the main cinnamon product of export is a rough unscraped bark. In India, some quill, quillings and featherings as well as chips are produced.

1.9 Cinnamon Products

In addition to various grades of cinnamon bark that can be found originating from various parts of the tropical world, cinnamon bark oil, cinnamon root oil, cinnamon leaf oil (ex-*Cinnamomum verum*); cassia buds (ex-*Cinnamomum cassia*), cassia oil (ex-*Cinnamomum cassia*) and cinnamon oleoresin (ex-*Cinnamomum cassia*, *Cinnamomum burmanni* or *Cinnamomum verum*). It should be pointed out, however, that cinnamon root oil is not produced commercially anywhere in the world because it is an uneconomical source of camphor.

An additional product of national importance in the Seychelles is the spent leaves from cinnamon leaf oil production.

1.9.1 Ground Cinnamon

As the name suggests, the dried bark is ground in a Fitzpatrick hammer mill to a specific mesh size. The properties of ground cinnamon are dependent upon the end use. For example, each food processor develops specifications depending upon whether the product is going to be used in meat or bakery products. Generally, the most important specifications are those of total plate count (bacteria, particularly *E. coli* and molds), insect fragments, volatile oil content and mesh size.

1.9.2 Cinnamon bark oil

Cinnamon bark oil, which is steam-distilled from the ground, dried inner bark of *Cinnamomum verum*, is a product which is produced mostly in Europe and the United States. It is used in flavor formulations for cola soft drinks and, to a lesser extent, for ketchup, baked goods, confectionaries, and meat products. The estimated world production for cinnamon bark oil is about 25 metric tonnes. Although Sri Lanka produces the best quality *C. verum* bark, only about 1.5 metric tonnes of bark oil are produced. The reason is that the quality of Sri Lanka oil is considered to be inferior to that produced in Europe and North America. Several years ago, it was found that cinnamon bark oil produced from Seychelles bark was both variable and inferior.

The essential oil yield of bark varies with the species and age of the tree, whether it has been cut back before, the thickness of the bark, the altitude at which the tree grew, and the season. Yields of 0.2 - 1.2% have been realized from commercial samples of *Cinnamomum verum* bark of various origins (Lawrence, 1967).

1.9.3 Cinnamon oleoresin

An oleoresin is a solvent extract of a ground spice from which the spent material and solvent have been removed. It is a concentrate of the solvent-soluble components of the spice, such as the essential oil, the fixed oil and other components, such as natural colours. The solvents normally used for the production of cinnamon oleoresin are ethylene dichloride, methylene chloride, acetone, hexane and isopropanol. The yield of oleoresin differs from one solvent to another. The type of

cinnamon or cinnamon-cassia used for the production of an oleoresin differs from country to country, as does the choice of solvent. For example, in the United Kingdom, the preferred oleoresin is made from Cinnamomum verum using acetone solvent, whereas in the United States, all forms of cinnamon and cinnamon-cassia are extracted. Currently, ethylene dichloride is the most popular solvent.

The trend of using oleoresin cinnamon is increasing slightly each year as food processors switch from the traditional use of ground cinnamon to its "liquid concentrate". It is estimated that there are 25-30 metric tonnes of all types of cinnamon and cinnamon-cassia oleoresin produced annually.

1.9.4 Cinnamon Leaves

A very limited quantity of dried cinnamon leaves of Sri Lankan origin have found their way onto the spice shelves in the European market, particularly the United Kingdom.

1.9.5 Cinnamon leaf oil

Cinnamon leaf oil is the steam distilled product of the leaves of Cinnamomum verum. The approximate size of the world market is 110 metric tonnes. At one time, the Seychelles was the major producer; however, since then the market decreased after a new source of vanillin was obtained. Also, because of the change in the export of responsibilities from the private sector to the public sector (SEYCOM), there has been a shift in supply from Seychelles to Sri Lanka (Table 14). Recent internal troubles in Sri Lanka have resulted in rumours and speculations vis-a-vis the availability of cinnamon leaf oil.

TABLE 14.

A Comparison of the Export of Cinnamon Leaf Oil Between Sri Lanka and Seychelles

Year	Sri Lanka	Seychelles
1950-1960	41 (av)	76 (av)
1961-1965	22 (av)	75 (av)
1966	22.5	48.8
1967	19.8	35.6
1968	36.0	20.8
1969	42.7	11.9
1970	50.6	17.3
1971	27.8	12.0
1972	70.3	6.8
1973	87.5	2.1
1976	110.9	1.1
1983	90.0 (estimate)	-

Wijesekara, et al, 1975, and personal communication, 1983.

A summary of the cinnamon leaf oil market is shown in Table 15. It can be seen that the United States is the largest market for cinnamon leaf oil. As Seychelles cinnamon leaf oil was once a product of commerce in the U.S.A., it is worthwhile examining the market in some detail.

TABLE 15.

Cinnamon Leaf Oil Market (Sri Lankan Oil)

Country	1978	1983
U.S.A.[1]	35.2[2]	40.0[2]
U.K.[3]	26.7	30.0
France[3]	20.8	23.5
Singapore[3]	3.3	3.7
Australia	2.2	2.5
Germany	2.0	2.3

[1] including Canada's requirement

[2] metric tonnes

[3] includes some resale

Cinnamon leaf oil is now sold in the U.S.A. market through brokers and dealers, although the brokers handle the lion's share of the product. The two largest handlers of cinnamon leaf oil are L.A. Champon, Inc. and Polarome.

The oils in turn are re-sold to the formulators who supply the perfume and food processing industries. The main formulators who use cinnamon leaf oil are:

1. Ungerer
2. Naarden
3. Givaudan
4. Fritzsche, Dodge and Olcott

In addition, a large proportion of the oil is sold directly to the food processing industry. Polarome handles most of this business because it is the largest dealer in essential oils in the United States.

At one time, Seychelles cinnamon leaf oil was sold at a premium over cinnamon leaf oil ex-Sri Lanka because the Seychelles product had higher eugenol content and, according to some users, more desirable odour qualities. When the supply or availability of Seychelles cinnamon leaf became scarce, most users in the United States switched to a replacement oil made of Sri Lankan cinnamon leaf oil (90%) and clove leaf oil (10%). On questioning a number of flavourists and perfumers whose job it is to formulate and create, only a small percentage said that they would re-use Seychelles cinnamon leaf oil should it become available again. Most of the people interviewed stated that the decision of whether to use or not to use the oil would be based on two main factors:

1. Cost of oil. It has to be competitive with Sri Lankan material.
2. Availability. A constant supply of the oil must be guaranteed.

Finally, a third factor was also considered by about half of those interviewed. They stated that the product must also have chemical consistency from batch to batch and year to year.

1.9.5.1 Potential of Other Sources

Cinnamomum verum can be found growing and being cropped in India, Madagascar and Comoros, as well as Sri Lanka and Seychelles, so the potential for leaf oil production exists in these countries. In fact, India is thought to produce some 8 metric tonnes, but it is all for internal consumption.

It is estimated that, should Madagascar enter the world cinnamon leaf oil market, it has a potential production for a minimum of 8-10 metric tonnes and a maximum of 20-30 metric tonnes annually.

1.9.5.2 Distillation

A number of years ago, there were more than 50 traditional stills in operation in the Seychelles. Most of them were single units, although a few were triples (3 stills in series) (Figures 1 to 3).

It has been reported (Geevaratne, *et al*, 1979) that by 1978 there were 160 traditional stills (Figure 4) in operation in Sri Lanka. Since the early 1970's, however, a great amount of work has been done at C.I.S.I.R. (Colombo, Sri Lanka) on cinnamon distillation. During this time, a new Cisirill Manakoka still (Figure 5) has been designed especially for use in areas where water is scarce. Subsequent to this, a new Cisirill Boitaré still was designed (Figure 6). The latter has a more efficient condenser. Very recently, a still designed in France for the purpose of cinnamon leaf oil distillation has been constructed in the Seychelles. This still was a gift to the Seychelles by the USAID equivalent in the French government. A discussion of the traditional and the new French still can be seen in Sections 3.4 and 3.5.

1.9.5.3 Chemistry

Cinnamon leaf oil varies (Senanayake, 1977) in chemical composition depending upon the origin. For example:

	1	2	3	4	5
Eugenol (%)	85-95	75-85	80-95	70-95	70-95
Cinnamaldehyde (%)	ca 7	ca 5	ca 41	ca 7	ca 7

1 = Seychelles, 2 = Sri Lanka, 3 = India, 4 = Madagascar, 5 = Comoros

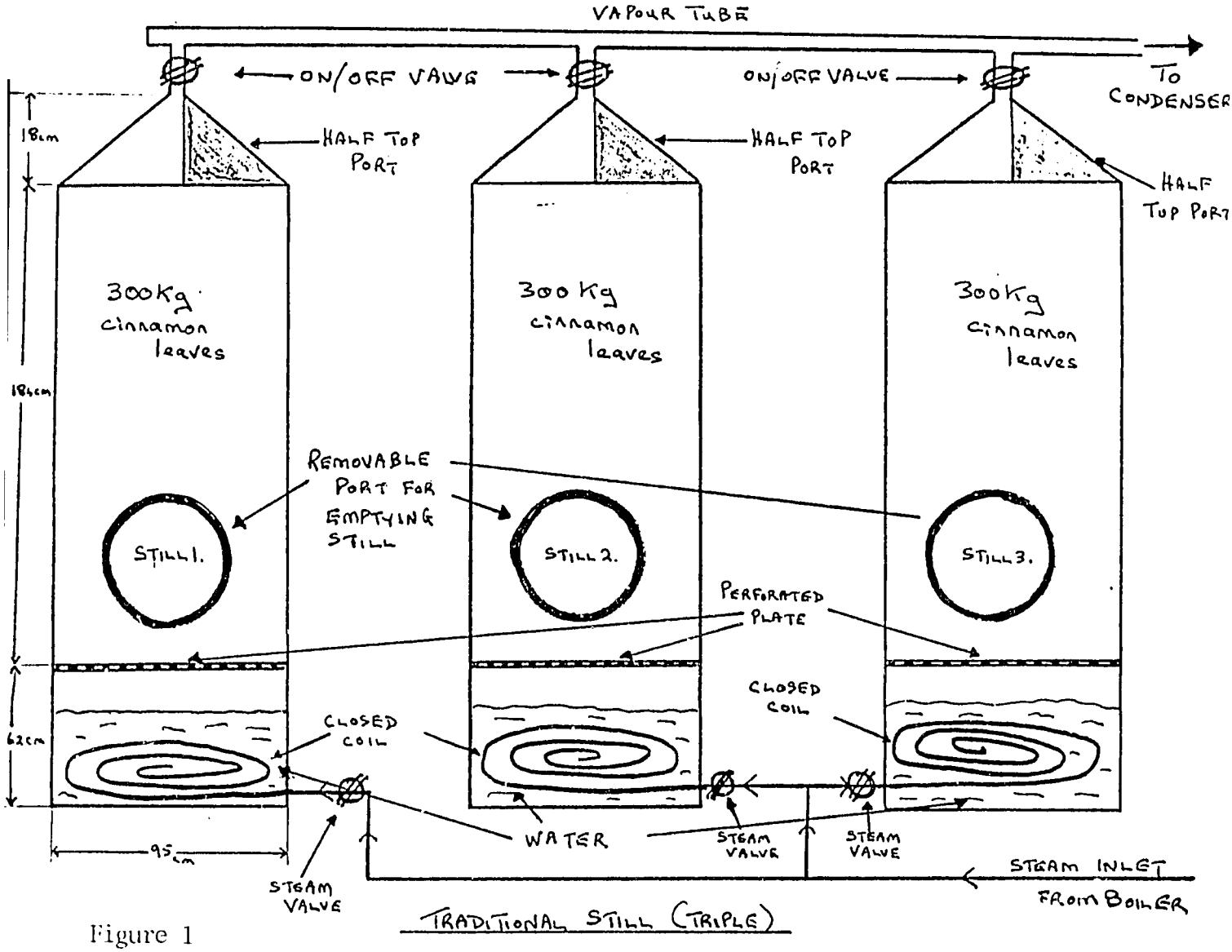
VAPOUR TUBE
ON/OFF VALVE
ON/OFF VALVE
TO CONDENSER
18cm
HALF TOP PORT
HALF TOP PORT
HALF TOP PORT
300Kg cinnamon leaves
300 Kg cinnamon leaves
300Kg cinnamon leaves
184cm
REMOVABLE PORT FOR EMPTYING STILL
STILL 1.
STILL 2.
STILL 3.
PERFORATED PLATE
CLOSED COIL
CLOSED COIL
62cm
WATER
STEAM VALVE
STEAM VALVE
95cm
STEAM VALVE
STEAM INLET FROM BOILER
TRADITIONAL STILL (TRIPLE)

Figure 1

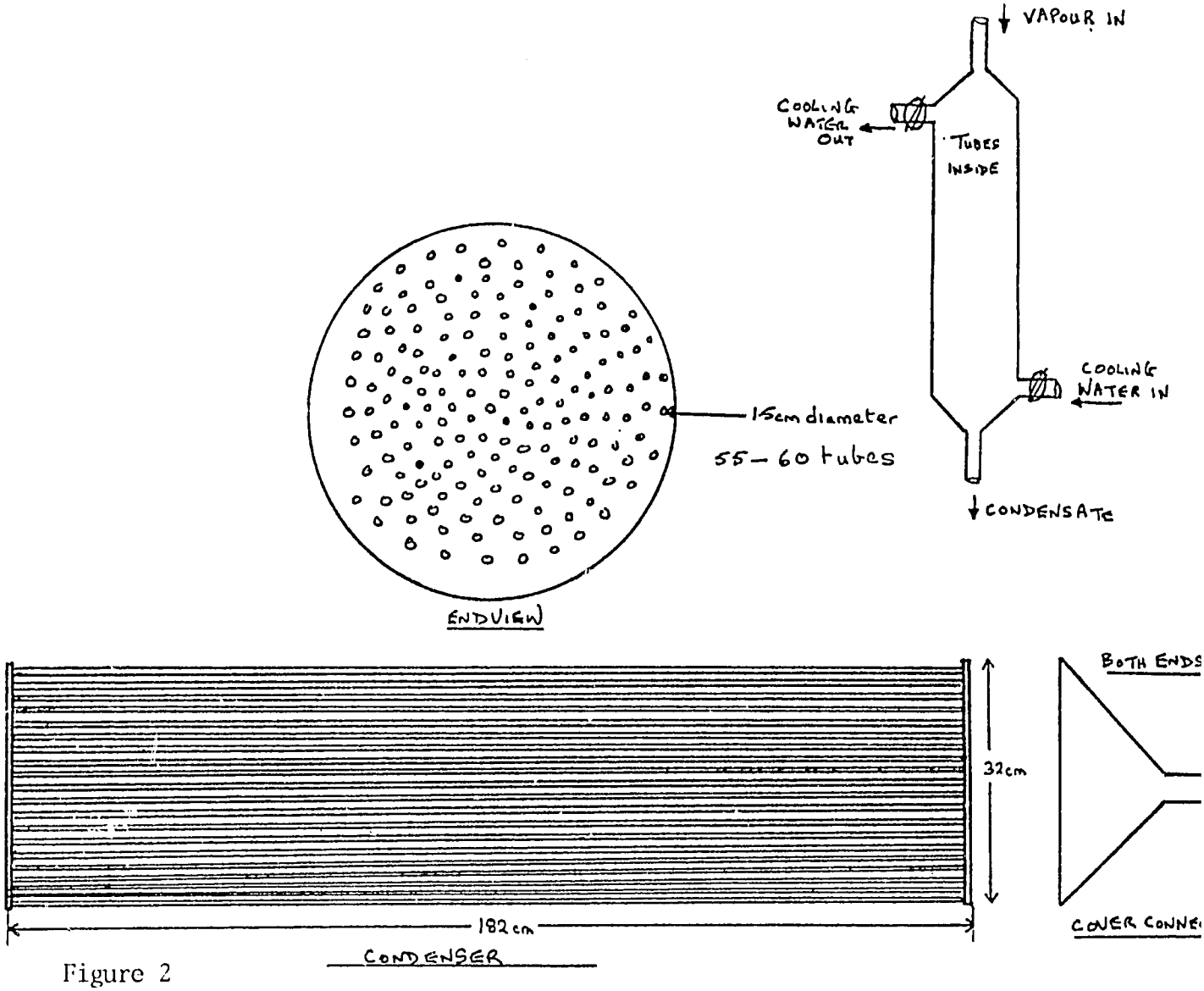
VAPOUR IN
COOLING WATER OUT
TUBES INSIDE
COOLING WATER IN
CONDENSATE
1·5cm diameter
55–60 tubes
END VIEW
32cm
182cm
CONDENSER
BOTH ENDS
COVER CONNE

Figure 2

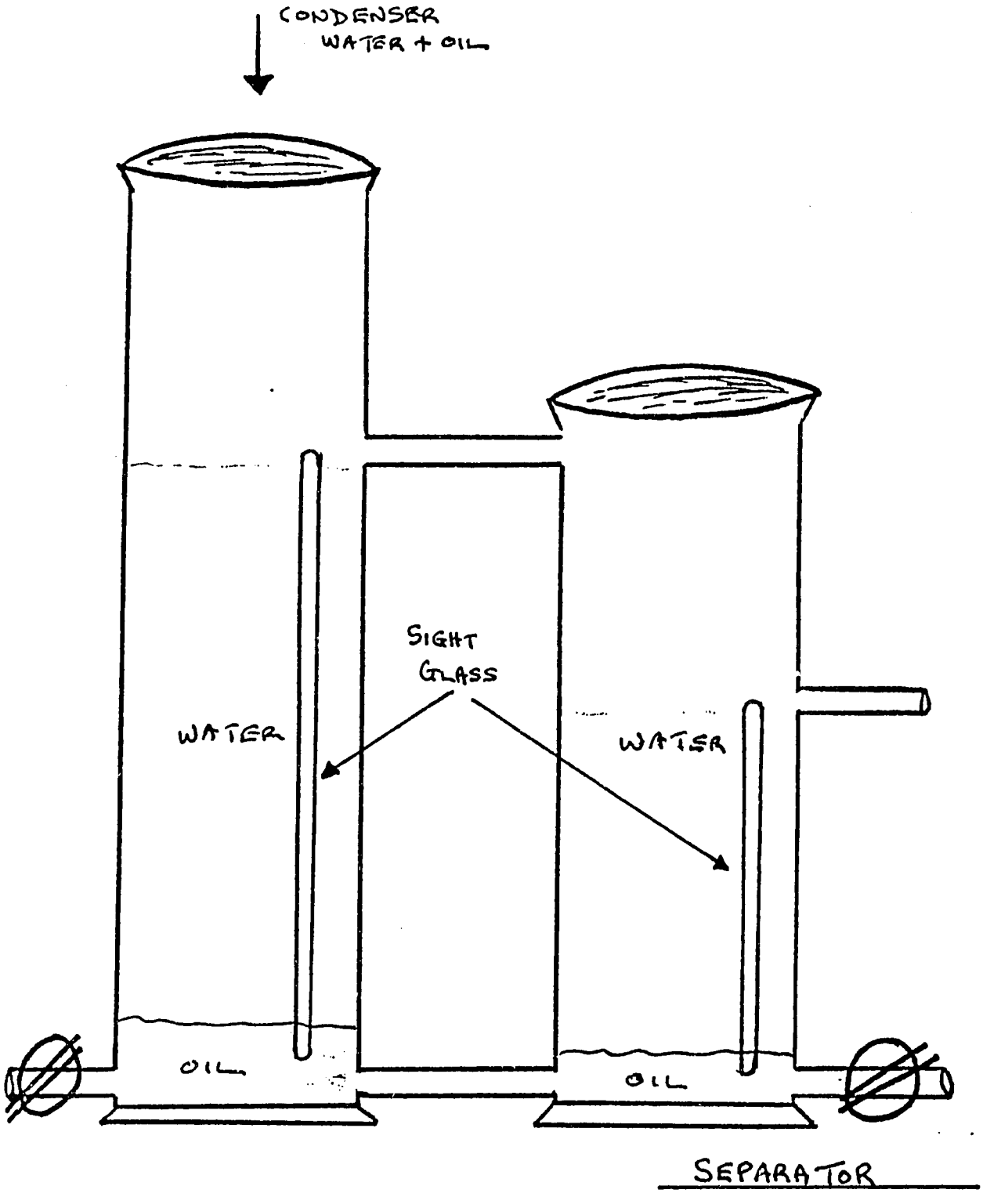
CONDENSER
WATER + OIL
SIGHT
GLASS
WATER
WATER
OIL
OIL
SEPARATOR

Figure 3

Figure 4 TRADITIONAL CINNAMON LEAF OIL STILL

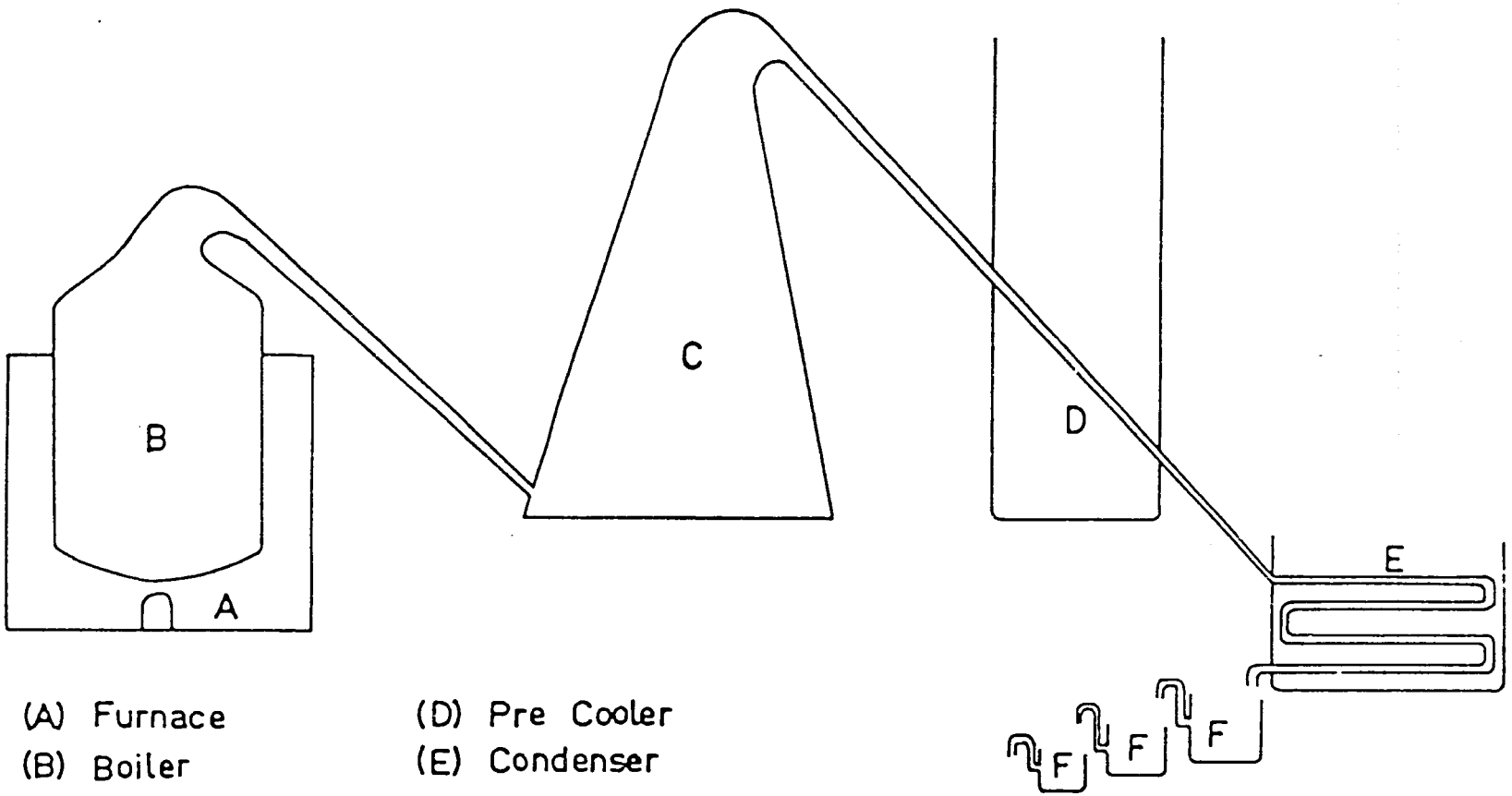

(A) Furnace
(B) Boiler
(C) Still Body
(D) Pre Cooler
(E) Condenser
(F) Florentine Vessel (oil seperator)

DIAGRAMATIC REPRESENTATION OF THE FIELD STILL "CISIRILL MANAKOKA" FOR DISTILLATION OF ESSENTIAL OILS.

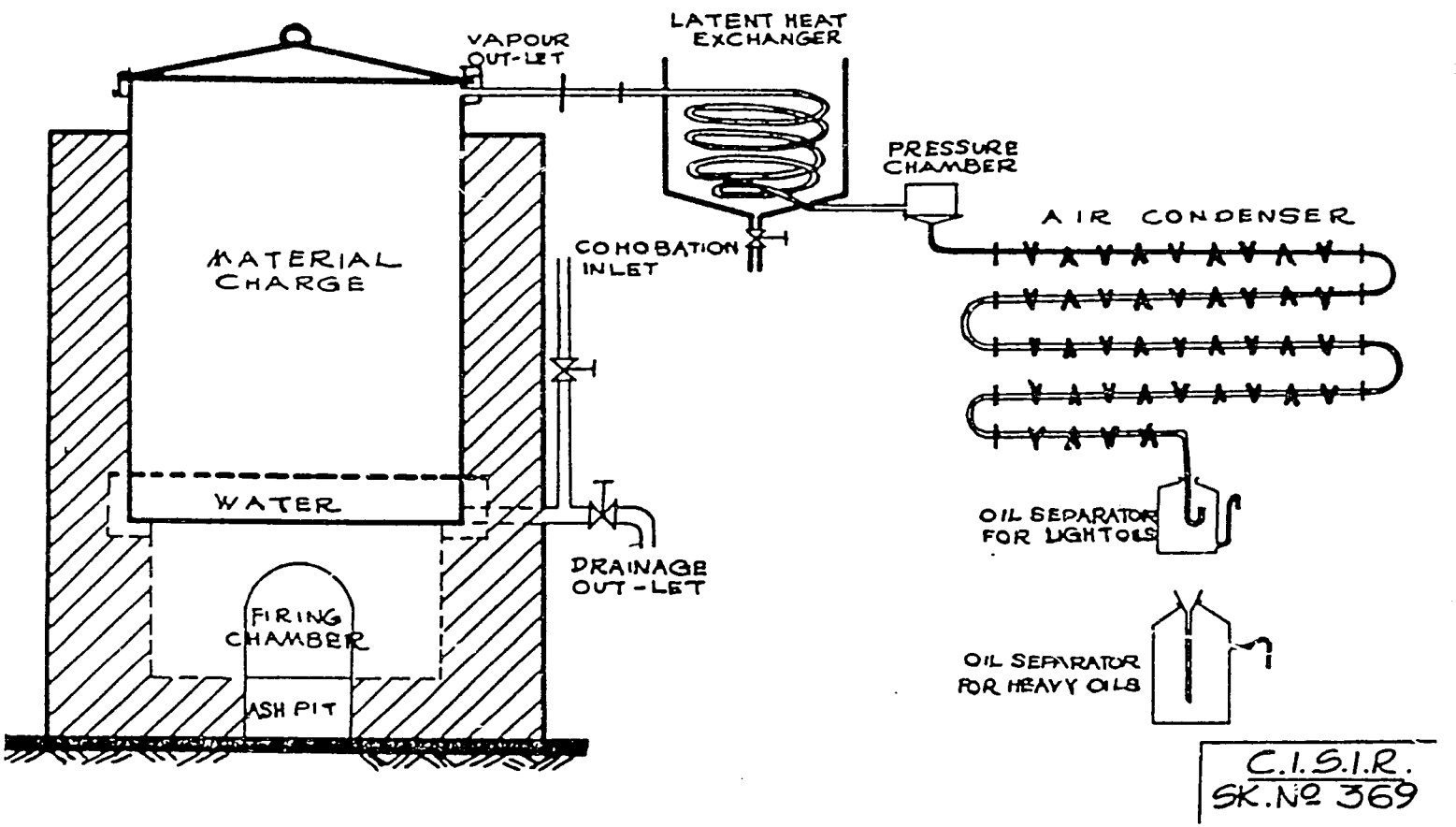

Figure 5

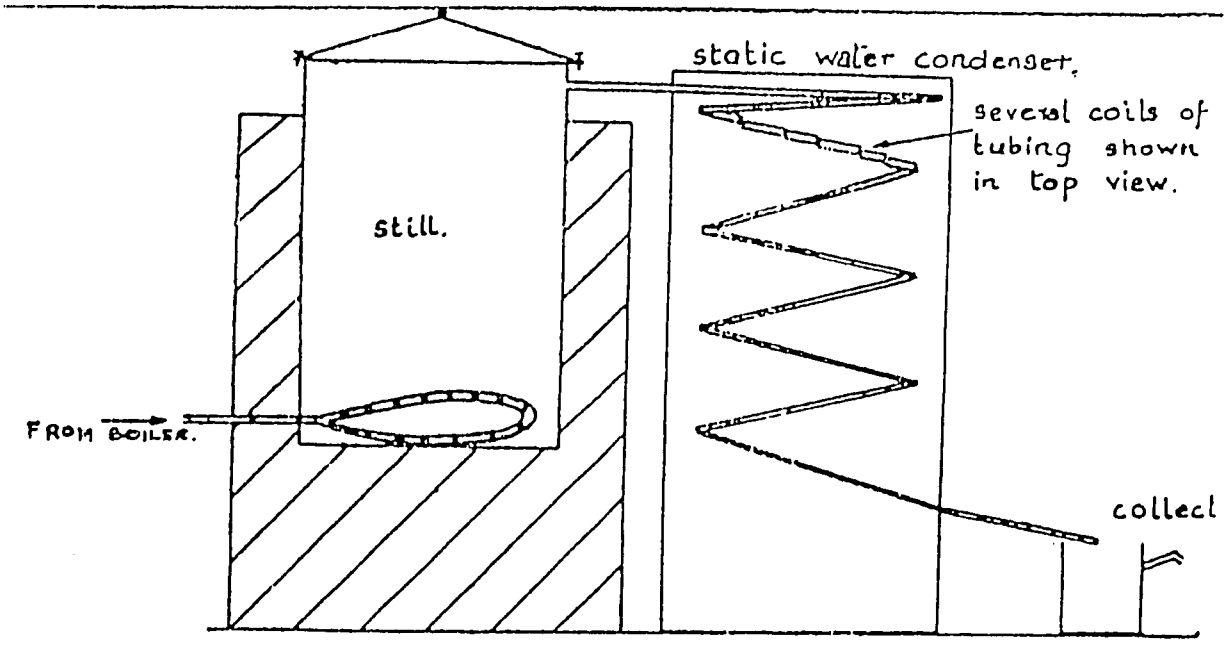

Cisirill Boitaré: Prototype

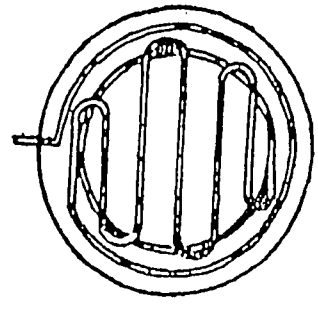

Figure 6

PLAN (Top view of the condenser

1.9.5.4 Yield

The essential oil of cinnamon leaf varies with species, age of the leaf, age of the tree, colour of leaf, position of the leaf on the tree, altitude at which the tree is growing, and season. New or "flush" leaves contain no oil. Young leaves have low oil content, and mature leaves have the highest oil content. It was reported in the Seychelles that 6-8 kg of oil was obtained from 900 kg of leaves per 8 hours.

1.9.5.5 Spent Cinnamon Leaves

In Sri Lanka and India, cinnamon leaves that have been exhausted of their oil by steam distillation are normally spread throughout the coppiced plantation as a mulch. This mulch acts as a weed deterrent and holds the moisture in the soil. In addition, it decomposes into a valuable source of humus.

In the Seychelles it is proposed that the leaves, after oil extraction, be spread to a depth of 4 to 5 inches over vegetable gardens and fruit orchards to serve as a mulch. It has been noted that the incidence of pests (insects, nematodes and snails) is decreased in areas where the spent leaves have been spread, but there is no documented evidence to support this theory. Nevertheless, the idea of spreading spent leaves in vegetable gardens and fruit orchards has strong popular support.

1.9.5.6 Economics

If it is assumed that 8 kg of oil are obtained from 1000 kg of leaves, then a 200 kg drum would require a minimum of 25 distillations of a triple traditional still. Thus, in one day a "triple" could produce 24 kg of oil from 3000 kg of leaves. It would take 8 1/3 days to produce 200 kg of oil from 25,000 kg of leaves, or it would take 41 2/3 days to produce a metric tonne of oil from 1,250,000 kg of leaves.

If a cropper was able to pick 2 kg of leaves for every 1 kg of bark and an average cropper obtained 50 kg of bark per day, then 30 croppers would be needed to supply enough leaves to keep a triple operating for a single day. If it is further considered that the world market price for C & F cinnamon leaf oil is $3.75/lb or Rs 56.43 per kg, one triple still in day will produce 24 x 56.43 = Rs 1354.32. However, the cost of distillation (See Section 3.3.1) and the cost of 300 kg of leaves must be factored into this. The following examples will serve as illustrations:

1. zero cost for distillation
   zero profit for SEYCOM
   then 3000 kg of leaves are worth Rs 1354.32 or Rs 0.45 per kg of leaves
2. 50% (of 1354.32) for distillation
   zero profit for SEYCOM
   then 3000 kg of leaves are worth Rs 677.16 or Rs 0.22 1/2 per kg of leaves
3. 60% (of 1354.32) for distillation
   15% profit for SEYCOM
   then 300 kg leaves are worth Rs 338.58 or Rs 0.11 1/4 per kg of leaves

Example 3, which is probably too conservative for the cost of distillation, can be translated in cropper's wages: 1 cropper collects 50 kg of bark and 100 kg of leaves with a value of Rs 30.00 + Rs 11.25 per day. It would appear that the key to success lies in the quantity of leaves that can be collected per day by an individual cropper. If it were to be lower than 100 kg, which is very possible, then not only will there be a lack of willingness to harvest leaves, but there will also be a shortage of labour.

1.10 Cinnamon Specifications

Since the stabilization of the world market for cinnamon and the sophistication of chemical analysis procedures, it has become of paramount importance that an exporting country be fully cognizant of the specifications of each importing country. Moreover, certain private enterprises often have more stringent specifications than those of their national standards organizations. Therefore, it is important for an exporting country to have direct contact with the importers so that these minor differences in specifications are not overlooked. The important specifications are I.S.O. (International Organization for Standardization), F.D.A. (U.S.A. Food and Drug Administration), F.C.C. (Food Chemical Codex), B.S.S. (British Standards), E.O.A. (Essential Oil Association Standards - U.S.A.), R.I.F.M. (Research Institute for Fragrance Materials, U.S.A.), A.S.T.A. (American Spice Trade Association Standards).

1.11 Cinnamon Prices

The price of cinnamon and its products vary according to their origin and quality.

1.11.1 Cinnamon Bark

The current world market prices for cinnamon and cassia are as follows:

1. Cinnamomum cassia - China: $1.65 - $2.10/lb
   Taiwan: $0.28/lb
2. Cinnamomum burmanni - Vera: $0.90 - $1.30/lb
   Korintji: $0.42 - $0.75/lb
3. Cinnamomum verum - Sri Lanka (chips): $0.29/lb
   Madagascar bark: $0.45/lb

1.11.2 Cinnamon leaf oil

The current world market prices for cinnamon leaf oil are as follows:

	Spot	C & F
U.K. (November 8, 1983):	$9.25/kg - $4.25/lb	$8.25/kg - $3.75/lb
U.S.A. (November 1, 1983):	$4.35 - $5.40/lb	$3.90 - $4.05/lb

PART II. CINNAMON MARKET

2.1 Introduction

As mentioned earlier, cinnamon and cassia of different botanical origins have different flavour and processing attributes. Also, cinnamon of the same botanical species grown and de-barked in different geographical locations will also differ in flavour and processing attributes. Nevertheless, bark from the same species will show the greatest similarities. To relate this information to world markets, one needs to examine the world consumption of cinnamon. This should be done on a country-by-country basis where the major sources of cinnamon used can be determined. This information can be seen in the following Sections 2.2 to 2.8. It should be pointed out that *Cinnamomum verum* bark originates only from Sri Lanka, Seychelles, Madagascar, Comoros and India.

2.2 North America and Mexico

The United States is by far the largest consumer of cinnamon and cassia. Currently, it consumes approximately 10,000 metric tonnes. Mexico and Canada, on the other hand, consume approximately 2,000 and 800 metric tonnes, respectively. A summary of the mix of cinnamon and cassia imported into the above noted countries can be seen in Table 16.

TABLE 16.

Cinnamon Importations by Species into the U.S., Canada and Mexico

Country	C. verum	C. cassia	C. burmanni
U.S.A.	8[1]	12	80
Canada	5	35	60
Mexico	85	5	10

[1] Percentage

In the United States, unground cinnamon and cassia are used in the preparation of pickles, preserve, pudding flavourings and stewed fruit. The largest use for ground cinnamon and cassia is in the baking industry, followed by the confectionery and beverage industries. A similar usage trend exists in Canada. The large use for cinnamon in Mexico is in a hot beverage where the cinnamon quills and quillings are used as an important flavouring agent.

2.3 Western European Countries

A summary of the current importation estimates for the major western European countries can be seen in Table 17.

TABLE 17.

Cinnamon Importation Estimates in Western Europe

Country	Quantity[1]	C. verum	C. cassia	C. burmanni	C. loureirii
Germany	1300	40[2]	40[2]	20[2]	-
Netherlands	1000	25	30	40	5[2]
U.K.	700	70	30	-	-
Spain	460	95	5	-	-
Sweden	440	5	65	25	5
Finland	280	5	30	65	-
Italy	260	90	10	-	-
France	240	40	60	-	-
Austria	200	15	15	70	-
Switzerland	150	80	15	5	-
Denmark	100	10	40	50	-
Norway	100	5	45	55	-

[1] In metric tonnes

[2] Percentage

It is worth noting that over the last five years, the users of C. cassia and C. burmanni bark have not been very discriminating with respect to origin. Price and availability seem to have been the main criteria of choice.

2.4 Eastern European Countries

A summary of the current important estimates for the major eastern European countries is given in Table 18.

TABLE 18.

Cinnamon Importation Estimates in Eastern Europe

Country	Quantity[1]	C. verum	C. cassia	C. burmanni	C. loureirii
USSR	1200[3]	30[2,4]	-	40[2]	30[2,5]
DDR	150	30	70[2]	-	-
Yugoslavia	120	20	80	-	-
Czechoslovakia	100	30	70	-	-
Hungary	50	-	-	-	50[5]

[1] Metric tonnes

[2] Percentage

[3] 1200 metric tonnes, a calculated guess as the true figures are unavailable

[4] C. verum bark imported by the USSR is the result of a bilateral trade agreement with Sri Lanka

[5] The C. loureirii bark imported by the USSR and Hungary is the result of bilateral trade agreements

2.5 Asian Countries

Although the examination of published statistics reveal that in addition to the large importation of cinnamon and cassia into Japan -1500 metric tonnes- a larger amount is imported into Hong Kong and Singapore, respectively. A majority of the cinnamon-cassia imported into the latter countries is destined for re-exportation. The cinnamon - cassia mix imported into Japan is as follows:

C. cassia	(90%)
C. loureirii	(5%)
C. verum	(5%)

2.6 Middle Eastern Countries

A summary of cinnamon importation into the Middle Eastern countries is shown in Table 19.

TABLE 19.

Cinnamon Importation Estimates in the Middle East

Country	Metric Tonnes
Saudi Arabia	900
Morocco	300
Egypt	200
Iran	120
Iraq	90
Algeria	80
Syria	80
Jordan	40
Tunisia	30
Kuwait	30
Libya	30

With the exception of Tunisia, the Middle Eastern countries obtain between 90-100% of their cinnamon-cassia from China. Occasionally, up to 5% of their requirements is obtained from Sri Lanka. Tunisia, on the other hand, has traditionally bought 90% of its cinnamon-cassia from India, the remaining 10% usually being Chinese.

In some cases the cinnamon-cassia imports are linked with bilateral trade agreements as is the situation with Egypt. It is also presumed that political considerations can influence the origin of cinnamon imported into a particular country.

2.7 South American Countries

Statistics on cinnamon consumption are available only from three South American countries:

	Tonnes
Brazil	650
Venezuela	325
Argentina	100

In the case of Brazil and Venezuela, it is difficult to determine the true origins of their cinnamon imports because there appears to be considerable transhipment of cinnamon and cassia from non-producing countries. Recently, Brazil used a cinnamon-cassia mix of *Cinnamomum cassia* (75%) and *Cinnamomum verum* (25%), whereas Venezuela's imports normally have the following mix:

Cinnamomum burmanni	(60%)
Cinnamomum cassia	(40%)

Argentina imports are more price dependent, and as a result, have in recent years been all of Sri Lankan origin. The 100 tonnes usually comprise the lower grade chips, quillings and featherings.

2.8 Other Countries

A summary of the current importation of cinnamon and cassia into Australia and New Zealand is shown in Table 20.

TABLE 20.

Cinnamon Importation in Australia and New Zealand

Country	Quantity[1]	C. verum	C. cassia	C. burmanni	C. loureirii
Australia	220	60[2]	20[2]	20[2]	-
New Zealand	60	80	20	-	-

[1] Metric tonnes

[2] Percentage

It is presumed that the cinnamon-cassia usage of South Africa is in excess of 100 metric tonnes.

2.9 Estimated World Market for Cinnamon in 1990

Using the current growth rates seen over the past few years, plus economic trends, it is estimated that the world market for cinnamon will be as shown in Table 21.

TABLE 21.

Estimated World Market for Cinnamon by 1990

	Country	Metric Tonnes
1.	U.S.A.	12100
2.	Mexico	2140
3.	Japan	1820
4.	Germany	1570
5.	USSR	1450
6.	Netherlands	1200
7.	Saudi Arabia	1090
8.	Canada	900
9.	United Kingdom	800
10.	Brazil	750
11.	Spain	520
12.	Sweden	500
13.	Venezuela	380
14.	Morocco	340
15.	Finland	320
16.	Italy	300
17.	France	280
18.	Australia	270
19.	Austria	240
20.	Egypt	220

PART III. GENERAL OBSERVATIONS AND RECOMMENDATIONS

3.1 Re-establishment of an International Market for Seychelles Cinnamon

Before examining this subject, the cinnamon "boom" years of the late 60's should be reviewed, particularly as applied to the United States. During the years 1964-1972 (especially 1966-1969), there was a shortage of cinnamon on the world market. This was brought about primarily by a) the Vietnam War, resulting in the loss to the world market of Vietnamese cinnamon (known in the U.S.A. as Saigon Cinnamon), and b) the U.S.A. being a restricted market for Chinese Cassia because there were no trade relations between the two countries at that time.

To fill this void, the United States turned to the use of cinnamon from other sources. The quality and type of cinnamon obtained was not as critical as the availability. Hence, all grades of all cinnamons were actively sought by the brokers, spice grinders and processors, and food processors.

Generally, a spice processor would blend ground cinnamons and cassias together to produce a grade of cinnamon that would closely duplicate that which had been used in the past. If this could not be done by blending (and for the majority of situations it could not), additional essential oils of cassia or synthetic reproductions of cassia and cinnamon oils were blended with the mixed cinnamons. The ultimate goal was to "recreate" a cinnamon blend that had the same specifications as the product for which it was a replacement.

During that time, the exportation of cinnamon from the Seychelles increased dramatically (see Section 1.6.1). At the same time, exportation of Indonesian, Chinese, Madagascan, Comoros, Taiwan, Sri Lankan and Indian cinnamon increased to help fill the void. One further point worth noting is that during the time of cinnamon scarcity, the price of all grades of cinnamon rose drastically so that there were higher than normal profits to be made. For the first time in the recent history of cinnamon, availability became a more important criterion than price.

Also, after the mid 1970's the world market for cinnamon products has been more or less stable with the exception of the availability of Seychelles. This has been somewhat disconcerting for the traditional Seychelles markets, such as the U.K. where Seychelles cinnamon was considered to be the most popular cinnamon on the market.

In recent years, the British spice grinders and processors and the food processing industry have had to turn away from using Seychelles cinnamon because of an erratic supply situation. Instead, they have been forced to use Madagascan bark and lower quality Sri Lankan chips and quillings as replacements. It is of interest to note that the British spice brokers obtain the Madagascan material through French spice brokers. There appears to be little, if any, direct contact between the Madagascan cinnamon exporters and the British cinnamon importers.

To re-establish the market for Seychelles cinnamon one needs to examine the world cinnamon consumption, the source of the cinnamon, the form of cinnamon used and the purpose for which the cinnamon is used (see Sections 2.2-2.8).

An example of a consuming nation is Germany which used approximately 1300 tonnes in 1981 (China 45%, Sri Lanka 25%, Indonesia 15%, Madagascar 10%, Comoros 5%). Cinnamomum verum was the source of 40% of this quantity or 585 tonnes. The question is, "Where and how is this cinnamon used in Germany?" Discussions with German importers reveal that a majority of all cinnamon and cassia is used in Germany by the bakery and confectionary industries. A lesser quantity is used in the meat processing industry and an even lesser amount in the manufacture of soups and pharmaceutical products. This information reveals that cinnamon is used as a ground product. A proportion of it is further converted into an essential oil; probably only that which is used in the pharmaceutical industry. Consequently, Germany should be most definitely a prime target for Seychelles cinnamon.

In the case of Switzerland, it can be seen that the Swiss use 140 tonnes (Sri Lanka 80%, China 15%, Indonesia 4% and Taiwan 1%) with 80% or 112 tonnes of Cinnamomum verum origin. Examination of usage patterns in Switzerland shows that, although a large proportion of the cinnamon is sold as such at the retail level, the quill form is the most popular. The reason cited for this is the multi-purpose nature of the home use of cinnamon which includes the use of quills in Glüwein, a popular spiced wine punch. Hence, this information indicates that Switzerland is not a prime market for Seychelles cinnamon, even though Cinnamomum verum is the desired type used in that country.

An extension of this type of market analysis indicates that the following countries should be prime targets for a concerted marketing program:

Germany
Spain
United Kingdom
Italy
Argentina
Australia

However, before concerted efforts are made to obtain firsthand market information in these countries, it is important that SEYCOM be cognizant of the competitive prices of cinnamon products. The principal competitive products are:

1. Sri Lankan chips
2. Comoros bark
3. Madagascan bark

The current market prices for these products are US$0.29, $0.43 and $0.45 per pound, respectively.

In one particular instance, a 10 tonne lot of Madagascan bark was being offered (November 8, 1983) for £625.00/tonne (US$993.75). Therefore, to be competitive, SEYCOM needs to offer bark at the same or a very similar price.

In order to re-establish a market for Seychelles cinnamon it is necessary to look for a "plus" that will help promote the product. From discussions with spice grinders in the U.K., it is quite possible that the "plus" is "quality of product", especially as each bag of cinnamon ready for export is examined for uniformity of colour and approximate moisture content. The reason that quality is possibly the promotional criterion stems from the fact that

a) shipments of Madagascan bark often contain more fines (dust) than Seychelles bark, and
b) Sri Lankan chips are dirty; often shipments contain wood and small stones.

To maintain itself as a viable marketable commodity, cinnamon must not only be competitive on the world market but it must be profitable for SEYCOM and the private and public cinnamon bark producers. To take this idea one step further, it is useful to calculate backwards from the market price.

Assume a price of US$993.75 per metric tonne in London. Referring back to Section 1.6.2.2, it can be seen an average freight cost will be US$285.00 per metric tonne. The profitability for SEYCOM can be envisaged as follows:

Market price of bark	US$993.75	(metric tonne)
Freight	285.00	
Payment to SEYCOM	$708.75	

Using Rs 6.84 (exchange rate), the payment to SEYCOM becomes Rs 4847.85. The bark cost SEYCOM Rs 3850 per metric tonne. Therefore, the profit is Rs 997.85 per metric tonne.

The mandate for SEYCOM is not to make exorbitant profits, therefore, this profit (25.9%) can be used to offset overhead. It is also $145.88 in foreign exchange per metric tonne.

Also, as the freight cost to the U.S.A. is $160.00 greater than to Europe, cinnamon would be less than profitable if the American market were sought.

Finally, it is obvious that the prime countries where the most profits are to be made are the European countries such as Germany, Spain, U.K. and Italy.

3.2 Cinnamon Oils

Seranayake (1977) examined a number of points related to chemical composition of cinnamon bark and cinnamon leaf oil. This study was done on wild growing trees in Sri Lanka and can probably be extrapolated to Seychelles. However, the work should be repeated to ensure that the conclusions of the study apply. The conclusions drawn by Seranayake are as follows:

1. The chemical composition of cinnamon leaf oils remains constant (uniform) at all ages of the tree with the exception that some eugenol (20%) is converted to eugenyl acetate in trees over 20 years old. The method of distillation used will hydrolyse eugenyl acetate back to eugenol so the difference will not be evident in the oil.
2. The distribution of cinnamic aldehyde in various parts of the leaf and stem is as follows:

	% cinnamaldehyde (Sri Lanka data)
Immature leaf	0.2
Older leaf	1.6
Mature leaf	3.7
Veins from mature leaves	34.2
Petioles	64.9

3. The chemical composition of cinnamon leaf oil varies slightly according to its geographical origin.
4. The chemical composition of the essential oil of the stem bark of an uncoppiced tree changes as the tree matures:

Tree Age	% Cinnamaldehyde	% Eugenol
2.5 years	11.2	27.7
10 years	62.2	18.2
20 years	50.5	26.0
Commercial oil	76.3	7.5

3.2.1 Ebullition of cinnamon leaf oil

Initially, when any essential oil is produced it possesses an undesirable "distillation odour" which is termed as an "off-top note". It is normal to remove this top-note by allowing the oil to "breathe" for a few days. This mean that the drum is filled, a piece of gauze is placed over the opening and the drum is allowed to sit for a couple of days in a protected place. During this time, any undesirable aromas will disappear. Once this has been done, nitrogen should be bubbled through the oil to remove any dissolved oxygen. After nitrogen treatment, the drum can be stoppered and stored. It is important that the drum be completely filled to the brim with oil as an air space in the drum will cause the oil to deteriorate more rapidly. Only epoxy-lined steel drums should be used.

3.2.2 Clarification of cinnamon leaf oil

Distillation of cinnamon leaf oil with traditional equipment results in a dark reddish-brown coloured oil. This colour is usually caused by a reaction of the eugenol (the major constituent of the oil) with iron and/or copper (lead will also cause a colour reaction). This colour can be removed if the oil is mixed with an aqueous solution of citric acid or tartaric acid. It is preferable to stir the mixture for awhile and then let it stand for a period of time. The oil can then be removed from the water by gravity separation.

3.2.3 Water removal from cinnamon leaf oil

After oil has been obtained from the "cascade separator" it should be allowed to stand for awhile to clarify, as it is often cloudy. This cloudiness is caused by droplets of water suspended in the oil. If the oil will not clarify it may have to be cooled to speed the process. Water can also be removed from oil by passing it through a screened funnel containing anhydrous sodium sulphate.

3.3 General Distillation Discussion

For maximum efficiency, essential oil distillation should be done on a round-the-clock basis. For example, lighting a fire or starting a boiler takes time and both are non-productive tasks. Therefore, the number of times they are done should be minimized.

Continuously working a still, however, requires a regular cleaning and maintenance schedule. Otherwise the quality of the oil will decrease and the still will become less efficient.

A distillery should be located close to its raw material; however, availability of water will probably influence the choice of site. The construction of the distillery which includes acquisition of boiler, stills, condensers, collectors, water supply, electricity, building, etc. is a capital expenditure which must be depreciated over a period of years. The operating costs are usually as follows:

raw material cost
labour, unskilled
supervisor
fuel
maintenance
electricity
water
depreciation on equipment
depreciation on building
miscellaneous

In addition, the following costs must be considered:

packaging
transport (local)
transport (international)
insurance
brokers fee
analysis fee
storage cost

3.4 Traditional Still

In reference to Section 1.9.5.2 and, in particular, Figures 1-3, a number of points will be raised concerning various parts of the still.

1. The traditional boiler, which is not shown in the figures, is a solid fuel boiler in which wood and waste materials are burned. From discussions held with various ex-distillers there was not a consensus of opinion as to what is the most efficient material to burn to produce the most BTU's. Most distillers used whatever trash and wood was locally available. A discussion with the organizers of the Seychelles Pottery told the Mission that they burned cinnamon wood in their kilns because it produced the highest number of BTU'S of any of the woods tried.
2. In Figure 1 the three stills can be seen connected to a single vapour tube. It was explained that each of the stills was filled with about 330 kg of fresh cinnamon leaves. Initially the number one still is started first while the second still is being loaded with leaves. At this time, the valves at the tops of stills 2 and 3 are closed while the valve on still 1 is opened. Once still 2 is filled and closed, the valve above it is opened. Finally after still 3 is filled, its valve is opened.

   It was estimated that about five hours were required to exhaust the oil from still 1, six hours from still 2 and eight hours from still 3. When still 1 is finished, the steam valve is closed, the valve at the top is closed and the half top is opened. After it has stopped vigourous steaming, the exhaust port is then removed and the hot spent leaves are forked out. After this has been done, the still is ready to be refilled. When the leaves have been exhausted in the other stills, this process is repeated for them.

The opening and shutting of the valves at the top of each of the stills is only required because the vapour tube is the same for each of the stills. It would appear that the reason for this is to eliminate two condensers which would be needed if each still was an individual unit. It should be pointed out that there is no efficiency in having a triple still connected to a single vapour tube. In fact, there is a slight decrease in efficiency along with a potential of vapour loss through mishandling of valves. This can be done because the valves are hot when they have to be closed so it is easy not to close them completely. When a still is opened, the valve must be fully closed. Otherwise, vapour containing oil and water from one of the other stills which have not completed the distillation process could easily leak out resulting in a yield loss of oil.

3. The condenser used in the traditional still (Figure 2) is not the best design. A condenser such as is shown in Figure 6 is a much better one. It is important, however, that the coils at the beginning of the condensers are kept right at the surface of the water in the static condenser tank because steam entering the condenser loses much of its heat at the surface. The condensate will heat the surface water to 80-90°C. At this temperature a fast rate of evaporation of tank water takes place resulting in a large loss of heat (the latent heat of evaporation).

   In addition, because hot water is less dense than cold water, there is little mixing in the tank and the water towards the bottom of the tank remains relatively cool. Generally, with this type of condenser there is a need to replace the water in the upper part of the condenser tank to prevent overheating. With this type of condenser a fast throughput (rate of distillation) can be used.

4. The "cascade" type of separator shown in Figure 3 has some problems in design as has the collector used in the French still.

5. A labour intensive, very inefficient process is that of emptying the still in the traditional triple. If the stills were independent of each other with separate vapour tubes to a condenser, then a basket filled with leaves could easily be lowered and raised from the mouth of the still,

either mechanically (as in the French still) or by a counterweight. In fact, the use of counterweights is recommended for all practices that require the movement of heavy objects such as placing the top on the still, moving the vapour tube, etc.

3.5 The French Still

It must be recognized initially that the French still, although very impressively designed and constructed, is overdesigned and will probably not be any more efficient (from a yield of oil standpoint) than the traditional still. The still is a conversion of one that has been used for lavender, rosemary, cypress leaves, etc. for many years in southern France. The condenser is a large volume, high throughout, high water user designed for efficient distillation in areas where the water supply is not a problem. Unfortunately, the oil separator is poorly designed and as this is a very important part of the whole distillation procedure, losses at this stage amount to the most costly losses. A diagramatic representation of the separator (Separator A) can be seen in Figure 7.

The top of the separator is open, so dirt, leaves, twigs, etc. can easily drop into the oil/water mixture and assist in forming an emulsion. This causes an unnecessary filtering step and potentially lowers the quality of the oil. This can be easily prevented by placing a screen over the inlet throat of each of the two tubes of the cascade separator.

During direct fire, water, and steam distillation there is a tendency for the oil to be removed from the plant material quite inefficiently. As a result the chemical composition of the oil changes somewhat. The reason this is a problem with cinnamon leaf oil distillation is because the oil has a density close to water (1.04 vs 1.00). This high density is caused by the eugenol present in the oil. During inefficient distillation, as is experienced in the French still and the traditional still, the density of the oil changes from 1.04 to less than 1.00. Consequently, the oil floats rather than sinks to the bottom of the separator. During an efficient phase of this inefficient process, more dense oil is produced and this sinks to the bottom. As a result, inside the separator, oil can be found floating on the surface and at the bottom. This problem is amplified by the poor design of the

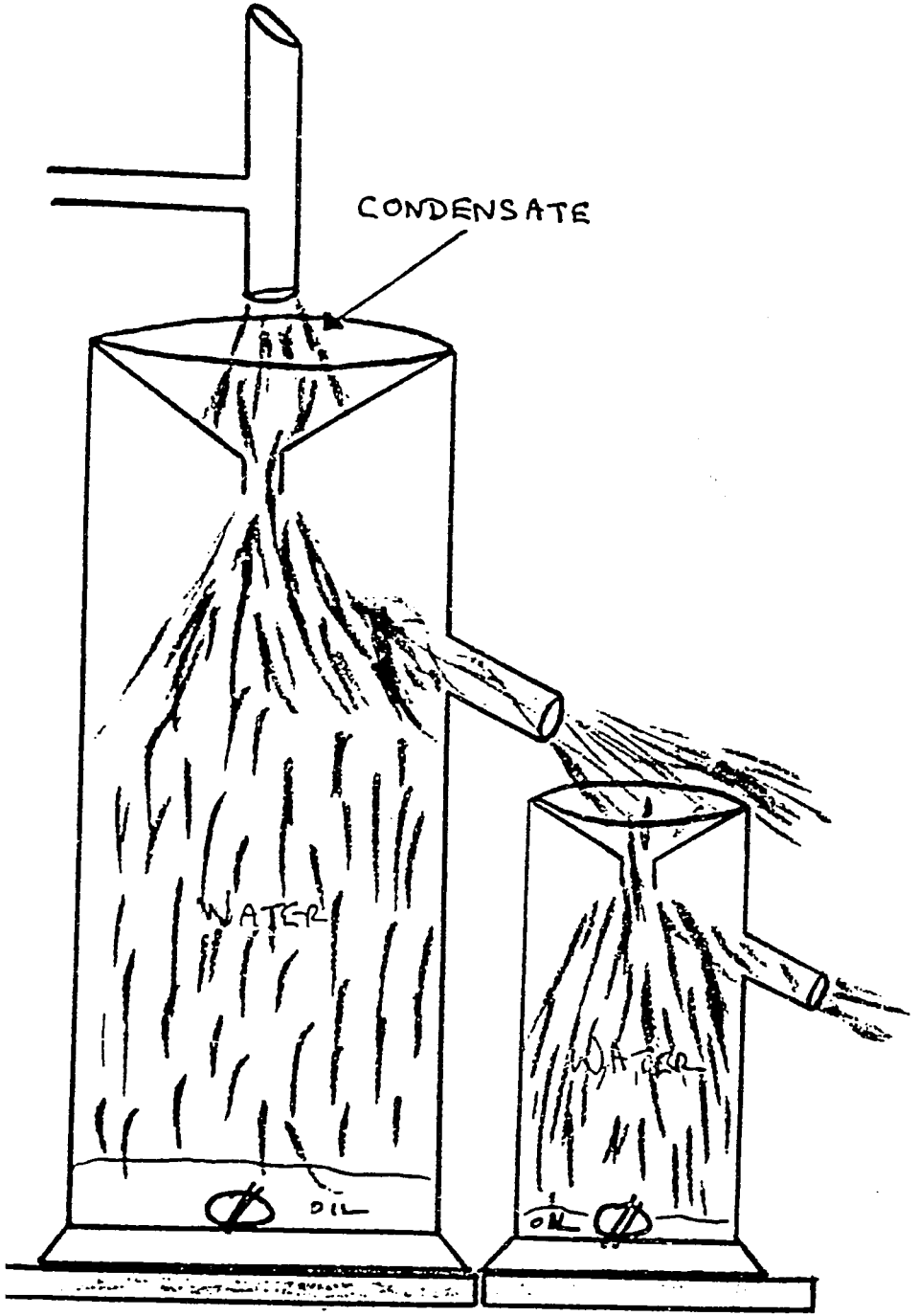

PROBLEMS

1. Poor oil Separation
2. Dirt can get into oil
3. Overflow difficult to control
4. Final oil separation both difficult and time consuming

SEPARATOR A

Figure 7

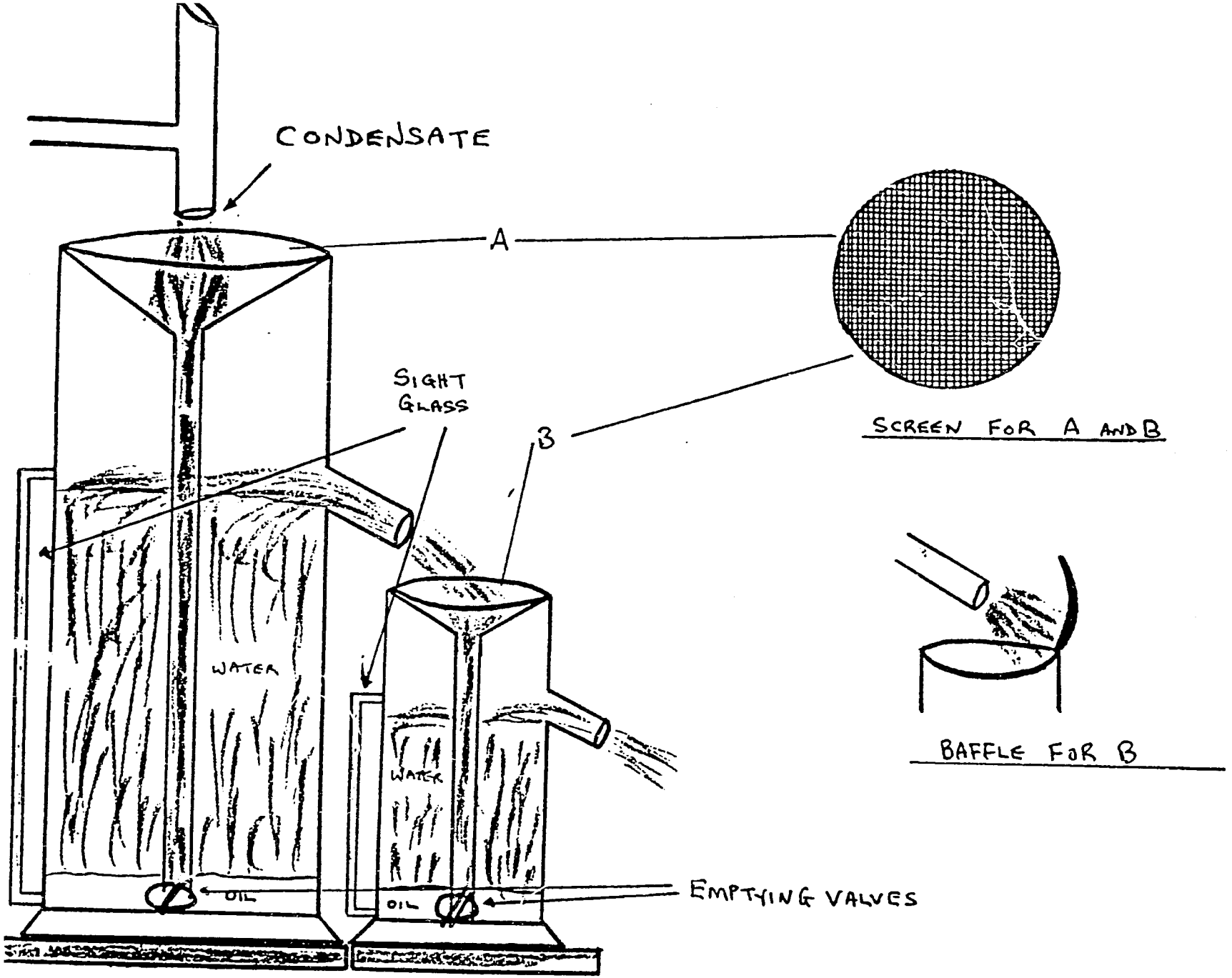

SEPARATOR B

Figure 8

separator in Figure 7. If this separator is compared with the separator in Figure 8, it can be seen that the funnel throat runs close to the bottom of the separator. Thus, when a layer of oil has already sunk to the bottom then all other oil and water must pass through it before settling. So, oil which is less dense will be dissolved in the reservoir of denser oil and thereby be prevented from rising to the surface. If by chance any does rise, it will be separated by an identical system in the second separator. It is possible and quite common that a smaller third identical system is added to the cascade if separation is not fully completed in tube 2.

In a cascade separator, the tubes are moved apart so that the overflow from the first tube runs into the second, and so on. The funnel tops of the separator tubes are fairly flat, so a baffle has to be placed on the far side of the top of the second and the third tubes to ensure that the overflow does not spill over resulting in oil loss. Another way to get around this problem is to have the mouth of the funnel large enough to cover the area in which the overflow rate changes are compensated.

Finally, as cinnamon leaf oil is heavier than water it has to be tapped off the bottom by opening one of the emptying valves. Unfortunately, the French designers omitted consideration of this aspect - that the emptying valves are very low. To empty the separator tubes each has to be elevated so that a graduated cylinder can be placed under the emptying valve to collect the oil in small amounts at a time. This could have been remedied easily if a ledge had been made for the separator tubes with ample space to place a collection can or separately funnel under the emptying valve.

The addition of a sight glass in the side of each separator tube makes it easier for the still operator to monitor the oil level and see when it is time to empty some oil from the tubes.

The points raised about the cascade separator used in conjunction with the "French still" are also applicable to the cascade separator used with the traditional still. In addition, there is one further problem (Figure 3) as the two sections of the traditional cascade separator are fixed. Consequently, if there is any need to adjust one of the tubes because of the rigidity to the whole system this task is not easy.

If the two sections of the separator were not fixed and the cascade system was constructed as described in Figure 8, the separation of oil from water would undoubtedly be simpler and more efficient .

3.6 Cinnamon Harvest

To aid in the harvest of cinnamon leaves, bark and wood from the almost topographically inaccessible areas in which cinnamon trees are found, a network of cables could be installed. The use of cables to assist in the transport of harvested materials, although used in the past to a limited extent, appears to be uneconomical in light of the potential return on investment. Hence, it is the author's opinion that there is no simple solution to this harvesting problem without subsidization.

Earlier in this report (c.f. section 1.6.1.), the abrasive nature of cinnamon leaf removal during harvesting was mentioned. In fact, it was learned that in the past all of the leaf harvesters suffered from badly blistered and cut hands. The availability of a mechanical alternative has revealed little useful information. As a result, it is recommended that aluminum mesh gloves be worn over cotton gloves so that leaves and twigs can be stripped from cinnamon branches much in the same way as has been done in the past. At least with the use of such gloves the hands of the harvesters will be protected.

It is well known that wilting leaves lose approximately 30-40% of their weight when they are shade dried over a period of about 2 days. This loss of moisture is true even in the humid tropics. As a consequence, it is recommended that once the leaves are harvested they should be shade "dried" in an area close to their harvesting site for a period of two days. After this wilting time, the croppers should handle the leaves into the gunny sacks and transport them at the end of a working day to the distillery. This partial drying of the leaves will help the economics of oil production because for every 100 kg of partially dried leaves there will be about a 30% increase in actual leaves bought by the distillery. It should be noted that when the leaves are partially shade drying, there is a small loss of oil, however, if they are not allowed to dry for more than 3 days then the loss of oil is more than compensated by the increased quantity of actual leaves per 100 kg weight. In addition, it is more efficient to remove (distill) oil from partially dried leaves than from green leaves.

3.7 Final Comment

The demand for cinnamon leaf oil has enjoyed a slight increase over the last few years primarily due to its wider use in flavour formulations. As a consequence, there could be an opportunity to re-introduce Seychelles cinnamon leaf oil into the international market. However, the price restrictions force the situation to be one of an unsound investment. It is the belief of this author that the cinnamon leaf oil business will have to be severely subsidized if the decision to re-enter the world market is taken. Financially, the re-entry into the market seems like a very insecure way to solicit foreign exchange.

Although cinnamon leaf oil is a potential "value added" commodity it is poor value for the investment. Other value-added products such as were discussed in Section 1.9 are also out of the question at this time primarily because

a) the markets are inaccessible,
b) the markets are too small, and
c) there is a need first of all to re-establish the Seychelles as a legitimate producer of cinnamon bark again. This time the bark should have an availability and continuity of supply and a uniform quality.

APPENDIX 1

BIBLIOGRAPHY

1. Anon. Cultivation and processing of cinnamon. Ceylon Department of Agriculture (Colombo). Publication No. H 14309 (1968).

2. Geevaratne, D.V.M., E.R. Jansz, C. Umpathy, A.A. Sunil Gamini, A. Makhmudov and N.S.V. Ramasundara. Field Distillation of Cinnamon Leaf Oil. J. Nat. Sci. Council, Sri Lanka, 7 (1), 31-38 (1979).

3. International Trade Centre UNCTAD/GATT. Spices. A survey of the world market. Vol. I and II Geneva, (1977). Vol. I and II, Geneva, (1982).

4. Kannan, K. and S. Balakrishnan. A note on the viability of cinnamon seeds (Cinnamomum zeylanicaum Nees). Madras Agric. J. 54, 78-79 (1967).

5. Lawrence, B.M. A Review of Some of the Commercial Aspects of Cinnamon. Perfum. Essent. Oil Rec., 58, 236-241, (1967).

6. Mahboob, S. Cinnamon oil industry in India. Res. Indust. (India) 6, 229-232 (1961).

7. Purseglove, J.W., E.G. Brown, C.L. Green and S.R. Robbins. Cinnamon and Cassia. In Spices, Vol. 1, Longmans Inc., New York (1981).

8. Republic of Seychelles National Development Plan 1982-1986. Ministry of Planning and Development (1982).

9. Samarawira, I.S.E. Cinnamon. World Crops, 16, 45-49 (1964).

10. Senanayake, U.M. The Nature, Description and Biosynthesis of Volatiles in Cinnmomum spp. Ph.D., Univ. New South Wales, Kensington, Australia (1977).

11. Wijesekera, R.O.B., S. Ponnuchamy and A.L. Jayawardene. Cinnamon. C.I.S.I.R, Colombo, Sri Lanka (1975).

12. World Bank. Le Comores. Problèmes et perspectifs d'une économie insulaire de petite dimension. Bureau Regional Afrique de L'Est, Banque Mondiale, Washington, D.C. (1978).

APPENDIX 2

The following is a list of persons with whom discussions were held regarding the cinnamon industry.

1. Mr. Payet, Principal Secretary, Ministry of National Development
2. Mr. Nourice, Undersecretary, Ministry of National Development
3. Mr. Maxime Delpech, SADECO
4. Mr. Robert Taylor, Ministry of Planning and Foreign Affairs
5. Mr. Narty, Statistics Division, Ministry of Finance
6. Mr. George Gill, Chief Control Officer, Ministry of National Development
7. Mr. Willi Andre, Forestry Division, Ministry of National Development
8. Mr. Clifford Adam, Chief Agricultural Research and Development Officer, Ministry of National Development
9. Mr. Sadec Rassool, retired cinnamon leaf and patchouli distiller
10. Mr. Payet, traditional still manager, SADECO
11. Marcel French Still Manager, SADECO
12. Mr. W.D. Belmont, Minister of Labour
13. Mr. Georges Troian, Private estate owner
14. Mr. Joseph Albert, retired cinnnamon leaf distiller
15. Mr. E.M. Desnousse, General manager, SEYCOM
16. Mr. J. Mayadas, Comm. manager, SEYCOM
17. Mr. Soliman, private trader who used to deal in cinnamon
18. Mr. Y.M. Adam, private trader who used to deal in cinnamon
19. Mr. B. Rasool, Seychelles National Bank

SEYCHELLES CINNAMON FEASIBILITY STUDY

SECTION TWO:

Labor Markets and Employment

by

Dr. Michael Farbman
Chief, Employment and Small Enterprise Division
Bureau for Science and Technology
U.S. Agency for International Development
Washington, D.C. 20523

Prepared for

REDSO/Nairobi, Kenya
and
U.S. Embassy/Victoria, Seychelles

February 1984

61

Seychelles Cinnamon Feasibility Study--
Labor Markets and Employment

I. Background and introduction

The Seychelles Ministry for National Development asked the U.S. Ambassador in Victoria first for information, and subsequently to have USAID provide a team to do a "feasibility study," with reference to revitalizing Seychelles' cinnamon industry. In response to the first request, Dr. R. Morris of AID's Office of Agriculture in Washington (ST/AGR) sent a lengthy cable and pouched additional material to Amembassy, Victoria. In his cable Morris offered to put together a team under ST/AGR's cooperative agreement with the University of Idaho's Postharvest Institute for Perishables (PIP). This offer was formally accepted by the Ministry, and arrangements were made in coordination with Amembassy/Victoria and REDSO/Nairobi to send such a team in November 1983.

The requests for information and for a feasibility study derived from the Government of Seychelles' (GOS) interest in improving its then-deteriorating foreign exchange earnings. In particular, the GOS was interested in examining the feasibility of increasing domestic value added in the cinnamon industry by further processing cinnamon bark and leaf in the Seychelles into various grades of essential oils, rather than exporting the raw material (bark) for overseas processing. Answers to the above question would be fundamentally technical in nature--requiring knowledge about distillation processes, chemical properties of cinnamon bark and leaves, downstream industrial uses of the refined products, and importantly, of patterns of world trade and markets for these products.*

It was also asserted early in this trialogue, however, that in the Seychelles, in view of its recent development trends, an important question relating to agricultural labor supply and sectoral wage levels would be a

---

* See Section One: Technical Aspects

necessary component of any comprehensive investigation of the feasibility of further processing cinnamon leaf and bark in the Seychelles. As a consequence, ST/AGR's Morris, who was familiar with the labor situation in Seychelles, recommended that the feasibility study team include a labor market/employment specialist to complement the technical expertise of the PIP consultants. I was contacted and asked to join the team, which I agreed to do subject to funding being provided outside my office. Morris asked REDSO to support my TDY expenses, which they agreed to do.

Thus the terms of reference (TOR) for the study were widened to include labor and employment issues. This expansion of our TOR into labor and policy at our initiative subsequently proved to be an issue of consequence for the Ministry of National Development, since they had apparently never concurred in it. What is more important, it turned out they had no enthusiasm whatsoever for our raising questions outside the technical scope of work which they had believed the team was being sent to execute.

Upon our arrival, at an entrance interview, my role on the team was explained, and no objection was raised to our addressing labor and employment issues. Subsequently, at an interim meeting with the Principal Secretary, Min. of National Development, an emotional outburst of disapproval was directed at me, accusing me of going recklessly beyond the team's TOR and interfering in their internal affairs. I was told pointedly that the Seychelles had no interest in what I would be reporting, and the team was instructed to concentrate on the technical feasibility of further cinnamon processing options.

We believe that what had disturbed the Principal Secretary so deeply was an interview we had had the previous day with the Minister of Labor. We had been trying to inform ourselves on various GOS employment and education programs and on GOS policy which we believed strongly affected the supply of agricultural labor, an obvious key factor of production for cinnamon cropping and processing. We did not get a lot of information, either during that interview or in the form of written documents which we had requested but were

told were not available. As many of the programs and policies we enquired about were intricately tied to the socialist ideology of the present GOS, we believe that our questions were perceived as hostile. We suspect this inference was conveyed to the Principal Secretary--the team's main contact and a key GOS ideologue--and when we followed up with him to brief him midway on what we already knew and what further information we wished to pursue, he used the occasion to warn the team--principally me--that he had no use for recommendations other than those concerning technical feasibility. He would not concede that labor supply and wage levels were an integral component of "technical feasibility."

We immediately informed Ambassador Fischer of this episode. It was his view that the labor/wage dimension was important in our feasibility analysis, and he approved my continued pursuit of it despite the warning I had received. He suggested, however, that a separate report be submitted featuring this side of our enquiries, which he would convey to the GOS in a manner and at a time of his choosing. This is that report.

II. Labor and Employment in the Seychelles

The Seychelles economy is heavily dependent on tourism, particularly for foreign exchange. This sector began to grow following the opening of the international airport in 1971. As Table 1 indicates, between 1973 and 1982 its predominance as a foreign exchange earner grew steadily.

Tourism and related sectors also account for a substantial proportion of formal sector employment in Seychelles. Table II below breaks employment down by sector and industry. Although tourism is not aggregated into a single category, it is normally estimated since the late 1970s to account for between 30 and 40 percent of all employment in the Seychelles. Since the peak number of tourist arrivals in 1979, and the slowdown in tourism-related construction, this estimate has tended toward the low end of this range.

TABLE I.

Foreign Exchange Contributions of Export Sectors, 1973-1982

	1983	1974	1975	1976	1977	1978	1979	1980	1981	1982
Tourism	67.4	69.6	86.1	88.2	87.6	90.7	90.5	90.9	91.2	91.6
Copra	11.6	16.0	8.2	5.7	7.3	6.0	6.1	4.6	5.4	3.6
Other (incl cinnamon, tea, guano, fish)	21.0	14.4	5.7	6.1	5.1	3.3	3.4	4.5	3.4	4.8

Source: Central Bank of Seychelles, Quarterly Review, April - June 1983, Vol. I, No. 2, Aug. 83, Table II.

TABLE II.

Formal Employment by Sector and Industry, 1978-82

	Agriculture, Forestry and Fishing	Manufacturing	Mining, Quarrying and Construction	Wholesale and Retail Trade	Restaurants	Hotels	Transport, Storage and Communication		Services				
							Tourism related	Non-Tourism Related	Public Administration	Finance and Business	Social and Community Related	Other	Total
AVERAGE													
1978	2589	1081	2794	620	281	1908	622	1288	1170	400	2016	393	15169
1979	2046	1593	2719	738	454	2235	684	1434	1240	645	2204	393	16385
1980	1750	1815	2672	897	376	2138	654	1476	1465	792	2656	400	17133
1981	1585	1801	2560	1028	232	1993	640	1456	1535	762	2998	320	16910
1982	1905	1936	2242	1290	287	1799	620	1424	1532	1055	3557	381	18028

Source: Republic of Seychelles, Statistical Abstract, 1982, Statistics Division, Dept. of Finance and Industry, August 1983, Table 76.

Although growth in the tourist and related sectors caused dramatic and widespread structural change throughout the Seychelles economy, few sectors were as profoundly affected as agriculture. For instance, during the six years for which consistent data are available, formal agricultural employment was seen to decrease from 3125 persons to 1905, and from 19.5 to 10.6 percent of the total, (see Table III).

Table III.

Formal Agricultural Employment, 1977-82

	Numbers in Agriculture	Percent of Total Employment
1977 (ave.)	3125	19.5
1978 (ave.)	2589	17.1
1979 (ave.)	2046	12.5
1980 (ave.)	1750	10.2
1981 (ave.)	1585	9.4
1982 (ave.)	1905	10.6

Source: Statistical Abstract, 1982, op. cit.

Perhaps more importantly, however, a second trend has been having a substantial impact on the allocation of labor between sectors. Following independence, but more particularly following the accession to power of the present government in 1979, the Seychelles has been pursuing an active program of economic diversification away from the tourism sector and aimed ostensibly at the establishment of greater social equity. This program has resulted in a dramatic increase in the number of public enterprises and sociopolitical organizations as well as a more active public sector stance in economic matters.[1/] The reflection of these policies, particularly with reference to agricultural employment, may be seen in the public sector - private sector employment data in Table IV below.

---

1. IMF, "Seychelles - Staff Report for the 1983 Article IV Consultation, " Aug. 1983, p.2.

Table IV.

Total Employment and Agricultural Employment, Private Versus Public/Parastatal Sectors, 1973-82

	Total Employment				Agricultural Employment		
	Private Sector		Public Sector & Parastatal		Total No. Employed in Agriculture	No. Employed in Private Agriculture	Percent Employed in Private Agriculture
	No.	%	No.	%			
1973	N.A.		N.A.		N.A.	1697	N.A.
1974	N.A.		N.A.		N.A.	1998	N.A.
1975	N.A.		N.A.		N.A.	2060	N.A.
1976	N.A.		N.A.		N.A.	2158	N.A.
1977	10,300	64.3	5,725	35.7	3125	2159	69.1
1978	9,125	59.4	6,225	40.6	2589	1560	60.3
1979	9,550	57.8	6,975	41.2	2046	1011	49.4
1980	9,825	56.7	7,500	43.3	1750	799	45.7
1981	8,625	50.3	8,525	49.7	1585	616	38.9
1982	7,340	40.7	10,688	59.3	1905	565	29.7

Source: Ibid; and Central Bank Quarterly Review, op. cit., Table X.

Thus, not only has there been an absolute decrease in the size and proportion of employment in agriculture, there has been simultaneously a monotonic decrease in the proportion of the agricultural labor force working in private agriculture. This phenomenon has been accompanied by a similar decline in absolute and relative production from private agriculture.

These shifts are of course a natural response to the substantially increased investment being made by the GOS in production on state-owned farms and in the Islands Development Corporation, and in the number of nationalizations of formerly private agricultural production facilities. As will be explained below, through such nationalization and through the enforcement of certain wage and employment policies, the GOS is systematically reducing the importance and size of the Seychelles private sector, notably agriculture, but also tourism. The formula in many cases is simple: through intervention in labor or product markets, or through simple governmental fiat, make it difficult for an industry to offset costs.

One of the most important cost factors to all industries is labor. Recent trends in wages and earnings in different sectors, attributable both to competitive labor market and to administrative causes, are indicative of the underlying structural changes that have resulted from the rapid development of tourism and the imposition of a heavier interventionist hand by the Government. Table V shows these trends, by sector, since 1978. One is immediately struck by the rapid rate of increase in earnings in all sectors, almost doubling (on average) in a six-year period. In contrast, consumer prices increased by barely 50% for locally produced goods and less than 25% for imported goods.

Table V.

Average Monthly Earnings (Rupees) of Formal Employees by Sector and Industry, 1978-82

	Agriculture, Forestry and Fishing	Manufacturing	Mining, Quarrying and Construction	Wholesale and Retail Trade	Restaurants	Hotels	Transport, Storage and Communication		Services				
							Tourism related	Non-Tourism Related	Public Administration	Finance and Business	Social and Community Related	Other	Average
AVERAGE													
1978	622	1070	935	789	605	694	1205	883	1687	1233	1396	757	978
1979	781	1068	1130	957	784	967	1990	1687	2008	1699	1527	1005	1265
1980	887	1353	1353	1129	1013	1178	2059	1843	2074	1923	2055	1337	1524
1981	1078	1641	1487	1497	1157	1446	2265	1612	2237	2240	2118	1555	1712
1982	1231	1779	1590	1712	1238	1528	2215	2141	2263	2398	2168	1618	1853

Source: Statistical Abstract, 1982, Table 77.

Part of this implicit shift in favor of the labor share was market determined, principally arising out of the sizeable increase in the demand for labor throughout the 1970s in the tourist-related (particularly construction) industries. This excess demand caused market prices for labor to increase in other sectors, due to the scarcity which ensued. Agriculture in particular was vulnerable to this pressure for several reasons:

-- The relative unattractiveness of agricultural labor. The quality of alternative work, particularly in the formal sectors, has traditionally been perceived to be higher by agricultural labor in the Seychelles.

-- The growing real wage differential between agriculture and alternative employment sectors/industries. Absolute earnings differentials and real living standards diverged increasingly from the mid-1970s onward. Anybody with a non-agricultural employment option wisely exercised it.

-- Education, which had became more widely available, together with the increasing cosmopolitanization of the islands, had raised expectations and self-perceptions such that non-agricultural alternatives were actively sought after and indeed achievable.

-- Aspirations were also affected by the recent implementation of an islands-wide program for secondary school age children known as the National Youth Service, which in addition to raising expectations through a curriculum of political indoctrination, removed large portions of the younger labor force from the rural areas and effectively alienated them from the more physically onerous and less personally rewarding agricultural employment opportunities.

At the same time, government policy was contributing to both market-oriented and institutional incentives which ultimately impacted on one or another aspect of labor markets.

-- Wage determination - through requiring participation in wage negotiations by the party/government affiliated organism, the Seychelles People's Political Front (SPPF), the GOS contributed to the unsystematic growth in wage and earnings disparities, rather than an orderly "regulation of wages and conditions of employment" as called for by Act 13 of 1981.

-- Full Employment Scheme - In 1982 the GOS implemented a "workfare" scheme which entitled workers - particularly those who might have been available as agricultural labor - to a half day's work on various public works schemes at a rate which was not unfavorable in relation to prevailing agricultural wages.

-- Anti-redundancy Law - The "Employment Protection Act of 1983" limited employers' rights to terminate a contract of employment to the point where normal economic responses by private (and public sector) businesses became unreasonably constrained. As a consequence, overmanning is a problem in nearly all industries.

All of the above might be viewed as desirable protective labor legislation, but for the fact that, in the view of many, they were more politically/ideologically rooted, rather than arising from a concern for social welfare, the latter justifying the costs to economic efficiency that were imposed.

The net impact of the above, plus the imposition of statutory minimum wages that did not take account of special conditions like productivity constraints in agriculture, led to some anomalous results. For instance, as

shown in Table VI below, the wage index in agriculture grew dramatically from a level of 55.5 for women in 1973, to 478.1 in 1982. This adds up to a compound increase of 24% per year. In contrast, copra prices increased at a rate of only 13% per year. Worse still, while agricultural wages rose by 125% between 1979 and 1982, export prices for copra fell by 30% during the same period.

Table VI.

Minimum Wages Index in Agriculture (Private Sector) - Hourly Rates: 1976 = 100

	1973	1974	1975	1976	1977	1978	1979	1980	1981	1982
Female	55.5	80.5	92.6	100	127.7	162.0	213.0	268.5	416.6	478.1
Male	61.7	86.4	92.6	100	120.4	123.4	142.0	179.0	277.0	319.1

Source: Quarterly Review, op. cit., Table IX.

One final factor needs to be introduced in explaining the decline of employment in agriculture. It is in a sense a crowning blow, as it validates for the worst all of the above endogenous forces which have conspired to diminish the size and prospects for the sector. This factor is the external market for Seychelles agricultural commodities, in particular copra and cinnamon. The unfortunate fact is that despite the high quality of the former and the traditional demand that had always existed particularly in the West for the latter, world prices for these commodities are currently weak. Combined with high internal cost structures significantly caused by government policy, and limited options for increasing productivity, the Seychelles economy is naturally adapting by moving away from agriculture. What agriculture it retains is increasingly in the hands of parastatals and other (arguably inefficient) public sector bodies, as private producers continue to be squeezed by competition with public sector entities not constrained to operating by commercial criteria. In addition, as the GOS increasingly imposes its own monopsony power as sole internal purchaser and external marketer of agricultural commodities, it substitutes administered prices (which are often uneconomical to producers), and inferior market command (in comparison to the former competitive private commercial buyers/exporters) for the disciplines of the market. In so doing it forces the few remaining private agricultural producers into insolvency, and precipitates the takeover of the consequently diminished productive assets by the Government. Not accidentally, it also increases its own (the GOS's) hegemony over a critical economic sector.

Section III of this paper will deal with current conditions and prospects for labor and employment in the cinnamon industry, as affected by the general environment described in the preceding section.

III. Work and Wages in the Cinnamon Industry

Cinnamon harvesting in the Seychelles is a highly labor intensive enterprise. Much has been written about the shortcomings of cultivation practices and the sometimes unsystematic way in which cinnamon trees are

normally cropped. These well known facts will not be repeated here. Rather we shall focus on the key current and historic market and institutional forces that impact on the labor factor in this industry.

Cropping of cinnamon bark is considered by most people to be an inferior occupation. It is physically taxing, leaves one smelling of cinnamon bark, has negative sociological status connotations, and above all, is low paid. Furthermore it offers little in the way of future prospects, either in the cinnamon industry as such or outside, in the event the industry founders. There are redeeming features to being a cinnamon worker, however, such as the social/communal aspects of working in groups, sometimes family-based, and to being at least in part a master of your fate, i.e., most croppers are pieceworkers and exercise some degree of control over their earnings. They also have the option to be mobile as other opportunities arise. It appears that few workers hesitate very long in exercising this mobility. As a result of all the above factors, labor shortages in cinnamon cropping are frequently encountered.

The purpose of cropping cinnamon is to harvest its bark and its leaves. The bark is pounded off the wood with a blunt instrument, while the leaves traditionally are stripped for separate distillation of leaf-oil. While historically the Seychelles was a major distiller of cinnamon leaf oil, the islands currently have no fully functioning distilleries. One "new technology" and one "traditional technology" distillery are expected to come fully on stream during 1984. The effects on labor in the industry will not likely be very large, as the distillation effort as such is not particularly labor intensive. Besides, relative to cropping capacity, distillation capacity will be distinctly limited for the foreseeable future. Thus most trees will be stripped, and abandoned, in the plantation areas. Only a relatively small increment of labor will be required for transporting sufficient leaves to keep the distilleries running at full capacity.

The key labor question for the industry, thus, is not related so much to the intended renaissance in leaf distillation (which at best is a long term venture) as it is to retaining the basic labor force required to secure the production of cinnamon bark for export. The cinnamon producer, be he a private plantation owner or a governmental entity, is fundamentally constrained in his production options. On the one hand he faces fixed production costs, the most important of which is the piecework price to the laborer. That price is currently fixed at Rs. 55 to 70 per kilogram, green.* There is meant to be a loose relationship between this price and the statutory wage, referred to in Section II above. However, owing to the physical limitations on how long a person might work in the fields at the hard labor of barking cinnamon (normally five hours), the laborer seldom earns a full minimum wage for his five hours' work, although there is a nominal intention that he/she earn five-eights of the minimum wage, currently equal to Rs. 1008/month. With the normal range of production between 40 and 60 kg per day, it is easy to see why most workers, when offered the chance, would opt for work in virtually any other sector where, as Table V indicates, average monthly earnings are considerably higher.

But what of being more competitive in terms of wages? Herein lies the other important constraint to producers. All cinnamon bark producers are required to sell their processed cinnamon to SEYCOM, the Seychelles National Commodity Company. SEYCOM's procurement price since its establishment in 1982 has left no scope for producers to be generous in their payments to labor. This applies equally to public as well as private sector producers. Indeed, according to producers, SEYCOM's administered pricing bears no relationship to

---

*The price is determined largely by difficulty of cropping, remoteness from a collection point, density and topography of the plantation, age of the trees, and on local conditions related to alternative employment options available to the workforce.

production cost realities, particularly the largest component, labor. It is also alleged that it bears little relationship to prices for cinnamon bark on world markets, which SEYCOM appears to be inadept at exploiting to its own, or producers', advantages.

According to both current private producers and managers of public enterprises concerned with cinnamon, not only is there little scope for increasing wages to attract a larger labor force and thereby make more secure and predictable the quantity of cinnamon to be sold on world markets, there is not even enough revenue available to producers to cover the rest of the non-harvest labor costs of cinnamon production. Most notably, what is missed is the kind of routine maintenance - weeding and clearing - that preserves the current asset value of productive land and offers promise for the improvement of that asset. Given the choices open to the producer in the allocation of his revenues to various cost elements, the first to go is that relating to the future. All current costs obviously take precedence, such as paying for labor, materials, kiln drying charges, depreciation and of course for management.

There is an insidious side to this squeeze which affects only the private producer, since he alone (without implicit or explicit subsidies as may be provided to his public sector counterpart) must meet all his costs on a current basis. He may, and often does, get locked into a negatively accelerating cycle in which his assets - productive cinnamon lands or processing facilities - deteriorate to the point where it is more advantageous to him to pay off his workers and not produce at all. To the current Government, which is politically committed to increasing its participation in all aspects of the economy, this condition provides a prima facie pretext for nationalization, either with or without the implied allegation against the former owner that he willfully and for his own personal gain at the expense of the State, systematically milked his asset of all its value and then petitioned the State to take it over from him.

It was reported to the feasibility team that this adverse prospect is the Government's own doing. For reasons stemming more out of ideology than of economic or commercial feasibility, the GOS has seen fit to put out of business the former private traders who used to be responsible for domestic procurement and foreign marketing of cinnamon products. Perishing with them, apparently, has been all institutional capacity and memory for effectively marketing cinnamon. The alternative export agent, SEYCOM, admits to its inadequacies as export marketers (they also are the exclusive importer of most imported commodities), and it can be argued that it is their poor performance that has led to the sub-optimal current procurement price to cinnamon producers, and to the consequent weakness in wages.

Clearly there is more involved here than just SEYCOM's performance, not least of which are the relatively flat worldwide demand for cinnamon bark, and the production price advantages available to low-wage competitor countries like Sri Lanka and Indonesia. Yet the industry, in the absence of the SEYCOM factor, had been able to cope, even into the years when the structural transformation arising out of the growth of tourism was proceeding apace. For example, left to its own devices, the industry has historically successfully weathered very large fluctuations in its fortunes, as Table VII illustrates.

Table VII.

Cinnamon Bark Producer Prices, Selected Points, 1966-82

Period	Price Rs/Long Tenne
1966	900
1967-8	1360
1969	5000
1970	2000
1971	2200
Dec 1971	2600
Early 1972	2600
Sept-Dec 1972	2900
March 1973	3250
November 1973	3900
April 1974	4125
July 1974	4500
December 1974	4000
1975	2400
February 1970	2500
1977	3650
1978	3400
1979	2500
Nov 1980	2800
Dec 1980	3400
March 1981	4000

(July 81: All procurement now through SEYCOM)

Source: Interviews with private producers, Mahe Island.

Soon after it was set up, SEYCOM imposed a producers' price of Rs 3850/tonne, a price that remains in effect through early 1984. Clearly, particularly when converted to real terms, profitability and therefore the ability to perpetuate these enterprises, was considerably higher throughout the preceding 15 years. In contrast, with nominal wage levels rising rapidly in agriculture - as they must in order to compete with other sectors experiencing increasing productivity and/or growing demand - whatever margin may once have existed for private cinnamon producers has since worn thin or disappeared altogether. And without this "surplus", neither will productive assets be nurtured and expanded, nor will the prospects for employment and income generation in the industry be enhanced. That clearly is not good for producers, their labor forces, or the State. The State, it appears, will be inheritor of this legacy, and in the next section we shall examine our conclusions from this investigation and its implications for the State, particularly on the policy side.

IV. Conclusions

It is clear from the feasibility team's investigations that the cinnamon industry in the Seychelles is approaching a period of great instability and uncertainty. Part of it is due to the vagaries of the product being exclusively produced for export markets -- markets over which the Seychelles has no effective control and in which they face vigorous competition. In such circumstances it would appear sensible to take whatever steps are necessary and practical to control to the country's ultimate benefit those factors over which it has the power to exercise control. Since virtually all the production costs of cinnamon (bark in particular) are domestic in origin, i.e., land and local labor and management, it would seem most fruitful to optimize the cost structure of these production factors such that foreign competition would be aggressively engaged with the highest quality, most efficiently and inexpensively produced product possible. It is evident that the Seychelles, through its recent policies which have encouraged the acceleration of wages ahead of productivity, encouraged overmanning, implicitly

90

reduced the supply of labor to the agricultural sector, and most importantly, systematically wiped out private incentives to optimize production and marketing of cinnamon, has created all the necessary conditions for either a rapid decline of the industry or an expensive though ultimately doomed future of heavily subsidizing it.

The team was also impressed that as goes the cinnamon industry, so may go copra, a higher value export crop that appears to be suffering from the same sorts of internal mismanagement (most notably the role of SEYCOM) and is similarly adversely affected by GOS industrial and labor policy initiatives. As these two crops go, so go the fortunes of Mahe, Praline and several other islands, on which two crops the fundamentally rural, social and productive fabric and income generating capacity outside of tourism are principally dependent.

The team was unimpressed with the prospects for cinnamon leaf oil distillation, for reasons stated elsewhere in this report. Given the attenuation of the indigenous technological knowledge required to support leaf distillation, the uncertainty of raising an adequate labor force to guarantee the timely delivery of the raw materials to the distilleries, the ecological questions concerning removal of leaves from growing areas, and most importantly, the weak world demand and price for the Seychelles product, we do not encourage further investment in this activity. It is not the economic fillip which through cross-subsidization would preserve the larger, though foundering, cinnamon bark industry.

As for bark, it is the feasibility team's belief that it is not possible to continue to produce cinnamon in the Seychelles with the constraints described above in the absence of a subsidy. This suggests that there will be an inexorable de-privatization of cinnamon production, and a consequent increasing burden on the State to take over these enterprises, and to subsidize them, if it is desired to continue a Seychelles cinnamon industry. Apart from the misallocation of resources which such an outcome suggests, it does not fully anticipate the further deterioriation in the viability of the

sector that will take place when all the private producers, in whom is vested all the institutional and experiential knowledge and discipline of running these enterprises, will no longer be actively on the scene. Just as the understanding of the subtleties and details of distilling leaf oil from cinnamon and patchouli have been all but entirely lost in the Seychelles since the winding down of those industries, and just as SEYCOM has been a woefully imperfect substitute for the private traders it has endeavored to replace, so too will the State very likely be an inferior manager of cinnamon production facilities, all of which will inevitably fall into its hands if it does not abandon the path it is currently following.

Solutions to the above dilemma under the control of the GOS are few in number. Moreover, they can be achieved only at some political cost in the short run, although the survival and prosperity of the cinnamon industry in the long run must be considered an offsetting compensation. Four specific recommendations come to mind:

1. Most importantly, the GOS must restore incentives to the private producers to enable them to stay in business. The GOS must abandon its hyperbole and rhetoric which maligns the private producers and which characterizes their protestations as unpatriotic. While doubtless there have historically been rapacious and socially harmful private entrepreneurs, it does not help the commonwealth's prospects to drive producers to the wall and then accuse them of systematically bleeding their enterprises for personal gain.

2. The GOS should consider the impact which its protective labor legislation has had on the allocation of resources, most importantly through raising unit labor costs by legislating minimum wages and anti-redundancy regulations.

3. The GOS should attempt to control more effectively the relative growth of wages in leading sectors through an incomes policy. This will contribute to slowing down the outflow of workers from less favored industries

(such as agriculture) and/or retard the rate of increase in wage levels through labor markets in non-directly affected industries that have neither the growing demand nor increased productivity to support these higher wages.

4. Regarding the cinnamon industry in particular, the GOS should take SEYCOM and its bureaucracy out of the domestic procurement and export marketings processes, and allow competition and market forces to determine prices. A by-product of such an early initiative would be to recapture for the benefit of the country the exporting expertise of the former private traders who are still available and apparently willing to deploy their scarce skills in this area.

Unless the above actions are implemented, or others discovered that have a similar intended effect, the Seychelles is starting down a path that may cost them dearly. For example:

-- through loss of domestic employment and the social unrest that may follow;

-- through loss of export earnings and the consequent threat that presents to the acceptability as hard currency of the Seychelles Rupee (and derivatively the reduced access to imported goods on which the Seychelles are dependent);

-- through the discouragement of private investment and the more efficient utilization of scarce resources that typically accompanies that mode of economic organization; and perhaps the ultimate threat,

-- through the deterioriation in tourism that the Seychelles has already learned may result from a breakdown in security and domestic societal order.

Persons contacted:

1. Mr. David Fischer, U.S. Ambassador, Victoria
2. Mr. Georges Payette, Principal Sec'y, Ministry of National Development
3. Messrs. Nourris, Louis-Marie, Andre, Min. of National Development
4. Mr. Joseph Belmont, Minister of Labor
5. Mr. E. Faure, Chief Economist, Ministry of Planning and Foreign Affairs
6. Mr. R. Taylor, Ag Economist, Ministry of Planning and Foreign Affairs
7. Mr. Maxine Delpeche, General Manager, Seychelles Agricultural Development Corp (SADECO)
8. Mr. E. M. Desnousse, General Manager, Seychelles National Commodity Co., Ltd. (SEYCOM)
9. Mr. J. Mayadas, Commercial Manager, SEYCOM
10. Mr. George Gill, Chief Control Officer, Min. of National Development
11. Mr. M. Nartey, Statistician, Min. of Finance
12. Mr. Bertrand Rassool, Dep'y Director, Research Dept, Central Bank of Seychelles
13. Mr. Cliff Adam, Chief Ag R&D Officer, Agricultural Research Station, Grand Anse (site of USAID ag. project)
14. Mr. Yakub M. Adam, Managing Partner, Chaka Bros (import/export house)
15. Mr. Georges Troian, private estate owner, cinnamon cropper
16. Mr. Joseph Albert, private estate owner, cinnamon cropper and former cinnamon leaf oil distiller
17. Mr. Sadec Rassool, former grower and distiller of cinnamon and patchouli leaf
18. Mr. Payet, superintendent of construction of new traditional cinnamon leaf distillery

MF:etj:3/1/84:W1127o